CorSTAR

A TEKNEKRON INDUSTRIES AFFILIATE

WM DOCKET CONTROL CENTER

April 26, 1986 MAY -5 P12:18

WM-RES
~~WM Record File~~
B6985
CorStar

WM Project 10, 11, 16
Docket No.
PDR ✓
LPDR B, N, S

Distribution:
x P Brooks
x Joan-ticket

(Return to WM, 623-SS)

Ms. Pauline Brooks, Project Officer
Division of Waste Management
MS 623 SS
U.S. Nuclear Regulatory Commission
Washington, DC 20555

Subject: Contract No. NRC-02-81-026
Benchmarking of Computer Codes and Licensing Assistance
Monthly Letter Progress Report for February 1986

Dear Pauline:

This letter contains a management level summary of progress during the month of March. Also enclosed is a Technical Status Summary further describing work performed during this period.

Task 3 - Benchmark Problem Report - Waste Package Codes

On April 15,you notified us that the NRC will request that CorSTAR delete the geochemistry problems from the Final Benchmark Problem Report for this task. The geochemistry problems are to be submitted separately to the NRC in a letter report.

Tasks 4 & 5 - Siting Codes

During March, GeoTrans worked on revising the final Task 4 & 5 report and preparing a computer magnetic tape containing source code for the computer codes benchmarked during this task. GeoTrans is anticipating delivery of the magnetic tape during the week of April 14.

Tasks 4 & 5 - Radiological Assessment Codes

Draft copies of the final report for these tasks were submitted to the NRC by letter dated March 27, 1986.

8605290614 860421
PDR WMRES EECCORS
B-6985 PDR

CORPORATE SYSTEMS, TECHNOLOGIES, AND RESOURCES
2121 ALLSTON WAY • BERKELEY, CALIFORNIA 94704 • (415) 548-4100

BERKELEY WASHINGTON, D.C. INCLINE VILLAGE

3017

Tasks 4 & 5 - Repository Design Codes

During March, difficulties were encountered running problem 6.3 with the 1981 version of the code ADINA at the BNL computer facility. The CDC 7600 does not have sufficient core memory to allow us to run this problem using the finite element mesh used for the ADINAT code thermal analyses. During February, we reported a problem with the lack of temperature dependence in the ADINA creep model. These two problems were reported to the NRC by telephone and after discussions between Acres, CorSTAR, and NRC, CorSTAR recommended that the NRC obtain the newer 1984 release of the code ADINA and install it at the INEL computer facility. The advantages of the 1984 version of ADINA are summarized in the Technical Status Summary.

By the end of the reporting period, inputs for 6 of 9 STEALTH benchmark problems were debugged. Problems 5.3, 6.1, and 6.3 remain. SAI has made extensive revisions to version 4.1 of STEALTH code in preparing the geomechanical version of the code now being used in support of ONWI work. Our benchmarking efforts have uncovered several errors in the code, resulting in slower-than-expected progress. We will document the errors that have been discovered in a future progress report.

As of the end of the reporting period, we had not received access to the ORNL computer to benchmark the code HEATING.

Tasks 4 & 5 - Waste Package Codes

During the reporting period, the NRC informed us that a newer version of WAPPA, WAPPA-B will be acquired from the DOE before the end of April.

Task 6 - Technology Transfer

On March 28, Dr. David Large of CorSTAR visited the Software Engineering Laboratory at NASA's Goddard Space Flight Center to discuss NASA's experiences with software quality assurance and testing. A brief trip report from that visit is included with in the Technical Status Summary.

During March, considerable effort was devoted to documenting the microcomputer solutions to benchmark problems. Because of revisions in the benchmark problems that were executed we agreed to make the following substain: Repository Design Problem 2.8 will replace problem 3.2(c). Repository Design Problem 2.9 will replace problem 3.5.

TECHNICAL STATUS SUMMARY

CorSTAR

TECHNICAL STATUS REPORT ATTACHMENT
TO PROGRESS REPORT FOR MARCH 1986

Repository Design Codes

Task 4 — Procurement

All applicable codes have been procured. However, it may be necessary to obtain the most recent version of ADINA because of difficulties encountered while running the current version for some of the Benchmark Problems. This is discussed in greater detail below.

Code Installation

The ADINAT code has been successfully compiled and used to run sample problems supplied by ADINA Engineering and most of our analytical problems. The ADINA code was installed and compiled on the Brookhaven Computer System with the assistance of Mr. Lee Ho of ADINA Engineering. The memory storage variable MTOT was reduced from 25000 to 20000 in order to successfully compile the code. The solution has resulted in storage restrictions while running one field validation problem (Problem 6.3 — BWIP) to date.

General Information

On March 14, 1986, we contacted Mr. Lee Ho of ADINA Engineering to discuss some problems that had occured while attempting to run Problem 5.2. These problems involved the creep laws available within ADINA, and the time step compatibility between the ADINAT and ADINA codes. The details of these problems are discussed below. Mr. Ho told us that these problems had been addressed by ADINA Engineering, and have been corrected in the 1984 version of the code. We are currently benchmarking the 1981 version of ADINA at Brookhaven.

This information was relayed to Pauline Brooks of the NRC via Doug Vogt of CorSTAR. The NRC is investigating the possibility of obtaining the 1984 version of ADINA from ADINA Engineering under similar conditions as the 1981 version. Meanwhile, the NRC has asked Acres if it would be desirable to install the 1984 version of ADINA (if obtained) and the current version of ADINAT at the Idaho National Engineering Laboratory (INEL) computer. The INEL facility operates two CYBER 176 mainframe computers 24-hours a day. These computers are similar to the mainframe at Brookhaven, but are about ten years newer. Telephone communications would be through a national network facility, such as "TYMNET" or "TELENET," and would eliminate monthly long-distance costs. Some learning of the INEL system will be necessary, but since it is CDC equipment, this is not expected to be a major problem. We have received application forms for computer usage at INEL, which will be submitted as soon as possible. According to information on these forms, processing will take a minimum of two to three weeks.

We believe that the NRC should obtain the 1984 version of the ADINA code for the benchmarking process since this version is capable of modeling creep laws appearing in several of the Benchmark Problems (5.1, 5.2, 5.3, 6.1). It is our understanding that part of the delay in the initial installation of ADINA and ADINAT at Brookhaven was because the tape supplied by ADINA Engineering could not be read at Brookhaven. The code was eventually loaded on the INEL computer, then transmitted via telephone hook-up to Brookhaven. Since the ADINA codes are the only remaining codes to be benchmarked, we recommend that these codes (if obtained) be installed on the INEL computer system.

It must be noted that if the 1984 version of ADINA is obtained for benchmarking, all previous problems run with the 1981 version of ADINA should be re-run with the 1984 version to verify its accuracy. This check of the code's accuracy will be necessary regardless of the computer facility used.

CorSTAR has requested that we compile temperature results from previous runs of Problem 5.2 for their use as boundary conditions in Problem 5.1. The upper and lower model boundaries for Problem 5.1 will be -400 and -600m respectively. We have compiled temperatures at or near these depths from runs using the DOT and COYOTE codes for basalt and salt. These data are presented later in this report.

Run Benchmark Problems

The structural analysis of the Axisymmetric model of Problem 6.1 (PSV) has been set up for ADINA. Several runs have been attempted, but the program has terminated at various stages due to divergence while integrating the stress or strain of the elements. It has been determined that the divergence occurs in the computation of creep strains. It appears that this divergence occurs because of the creep law used. Problem 6.1 specifies a power-law creep function which is dependent on stress, time, and temperature. Creep models in the 1981 version of ADINA are functions of stress and time only. In an attempt to make the creep law work, we increased the value of a constant multiplier of the entire function to account for an average temperature.

A second, but related, problem with the ADINA code is that only one time step can be specified throughout the solution domain. This also caused difficulties in Problem 6.1. During the most successful run of this problem, the solution became divergent at the first time step after the heaters became active. This is due to two causes. The first, as explained above, is that the creep law was not accurately specified. The second cause is related to the time step size. In ADINAT, the user can specify several time intervals with different time steps sizes in each. This helps improve the accuracy of the solutions in regions where the temperature gradient is steep. However, ADINA (1981) allows only one constant time step throughout the solution. In Problem 6.1, a time step of 15 days was used because the heaters do not become active until Day 390 to Day 405 is extreme. This increase in stress, coupled with an incorrect creep law, appear to have caused divergence in the solution.

We contacted Mr. Lee Ho of ADINA Engineering to discuss solutions for these problems on March 14, 1986. Mr. Ho informed us that these, and other, limitations of the 1981 version of ADINA have been corrected in the 1984 version of the code. In the 1984 version, ADINA contains a creep law that is a power-law function of stress, time and temperature. Additionally, the 1984 version allows complete compatibility with the ADINAT code. ADINA reads all of the temperature data provided by ADINAT, and interpolates the temperature at any time desired. In the current version of ADINA (1981), the times at which temperature are specified by ADINAT must agree with intergation times in ADINA. The selection of time steps in ADINA 1984 is more flexible, and may be independent of time steps used for ADINAT.

Task 6 – Benchmark Problems Solutions Report

The 22 benchmark problem computer programs have been assembled into a central library and are undergoing slight modifications as necessary to prepare them for submission to the NRC. The library consists of seven FORTRAN programs, seven BASIC programs, and eight LOTUS-123 worksheets.

As shown on the attached table, 14 of the programs are in final form while 8 require some additional work. Final documentation has been prepared for six of the LOTUS-123 worksheets and preliminary documentation materials have been assembled for the remainign programs. The documentation for each program includes a detailed description of the theory involved, and item-by-item discussion of each protion of the program, and an example output. Two sections of the documentation (Sections WP 3.3 and WP 3.6) are enclosed for your review and comment.

CorSTAR

SUMMARY OF TEMPERATURE DATA FROM PROBLEM 5.2

Temperature Data for BASALT Computed by DOT (°C)

Depth	Initial	100 Years	300 Years	1000 Years
400 m.	23.0	23.02	25.84	26.33
590	26.8	29.31	31.88	30.65

Temperature Data for SALT Computed by COYOTE (°C)

Depth	Initial	100 Years	300 Years	1000 Years
390 m.	22.8	24.68	26.23	25.12
600	27.0	31.54	31.89	29.97

CorSTAR

BENCHMARK PROBLEMS SOLUTION REPORT STATUS

SECTION	PROGRAM TYPE	PROGRAM NAME	PROGRAM STATUS	DOCUMENTATION STATUS	COMMENTS
ANSIDECH	FORTRAN	ANSIDECH.EXE	FINAL	PRELIM.	ESTIMATES FISSION PRODUCT DECAY HEAT FOR RA 2.1, RA 2.2, RA 2.3
BURNUP	FORTRAN	BURNUP.EXE	FINAL	PRELIM.	ESTIMATES FISSION BY ISOTOPE FOR RA 2.1, RA 2.2, RA 2.3
CELLPOST	FORTRAN	CELLPOST.EXE	FINAL	PRELIM.	POST PROCESSOR FOR RA 3.0, RA 3.1, RA 3.2
CELLTRAN	FORTRAN	CELLTRAN.NIH	PRELIM.	PRELIM.	NEEDS TO BE CONVERTED TO IBM PC FORTRAN
DOSEFAC	FORTRAN	DOSEFAC.EXE	FINAL	PRELIM.	DOSE FACTORS FOR RA 3.0, RA 3.1, RA 3.2
GRIDST63	BASIC	GRIDST63.BAS	FINAL	PRELIM.	STEALTH GRID GENERATOR FOR RD 5.2, RD 5.3, RD 6.1, RD 6.3
RA U234	LOTUS	RAU234.WKS	FINAL	PRELIM.	FOR USE IN RA 2.1, RA 2.2, RA 2.3, RA 2.4, RA 2.5
RD 2.6	BASIC		PRELIM.	PRELIM.	
RD 2.8	BASIC	PRB28.BAS	FINAL	PRELIM.	
RD 2.9	BASIC	PRB29.BAS	FINAL	PRELIM.	
RD 3.2a	LOTUS	RD32A.WKS	FINAL	FINAL	
RD 3.2b	LOTUS	RD32B.WKS	FINAL	FINAL	
RD 3.5	LOTUS	RD35.WKS	PRELIM.	PRELIM.	WORKING ON THE DRUCKER-PRAGER CRITERION
WP 2.3	BASIC		PRELIM.	PRELIM.	NEEDS TO BE CONVERTED FROM ATARI BASIC
WP 2.4	BASIC		PRELIM.	PRELIM.	NEEDS TO BE CONVERTED FROM ATARI BASIC
WP 3.1	BASIC		PRELIM.	PRELIM.	NEEDS TO BE CONVERTED FROM ATARI BASIC
WP 3.3	LOTUS	WP33B.WKS	FINAL	FINAL	SENDING TO NRC IN 4/86 MONTHLY
WP 3.4	LOTUS	WP34A.WKS	FINAL	FINAL	
WP 3.6	LOTUS	WP36.WKS	FINAL	FINAL	SENDING TO NRC IN 4/86 MONTHLY
WP 4.1	LOTUS	WP41.WKS	FINAL	FINAL	
WP 5.2	FORTRAN	CELLMIX	PRELIM.	PRELIM.	REQUIRES FINAL COMPILATION
WP 5.2	FORTRAN	RCYLDIF	PRELIM.	PRELIM.	REQUIRES FINAL COMPILATION

LOTUS SPREADSHEET WP 3.3

This spreadsheet calculates the deformation of a thin rod subject to a step load.

Theory

The engineering aspects of this spreadsheet are discussed in Section 3.3 of Reference 2 (see attached).

Spreadsheet

Input Data: Problem specifications are input by the user in cells E5 through E9.

Rows 12-15: Intermediate calculations are performed in cells D12 through D15.

Column B: Time steps are calculated automatically in this column. The user may input specific times by disableing the range protection (type /WGPD) and typing the times in column B.

Column C: For cases in which the applied force (F1) is greater than the yield force (Rm), displacement is calculated by equation 73 for times less than or equal to TE and by equation 81 for times greater than TE. In cases where the applied force is less than the yield force, equation 73 is used for all times.

A graph of displacement as a function of time will appear on the screen when the F10 key is pushed.

A sample spreadsheet is shown in Figure 1.

SECTION 3.3, REFERENCE 2

3.3 Deformation of a Thin Rod Subjected to a Step Load

Problem Statement. A mass supported by a thin rod is subjected to a step load which imposes a tensile load in the rod and causes it to experience elastic strain followed by plastic tensile strain. Figure 3.3-1 shows a mechanical model of the structure and the loading history.

Objectives. The objective of this analysis is to determine the displacement transient of the mass and the time when the displacement is at its maximum.

Analytical Solution. The ramp portion of the response when the rod is strained elastically as represented by the spring elongation is regarded as the first stage. In this stage, there is no slipping at the joint p. The differential equation of motion and the boundary conditions are:

$$m\ddot{y} + ky = F_1 \tag{67}$$

$$t = 0,\ y = 0$$

$$t = 0,\ \dot{y} = 0 \tag{69}$$

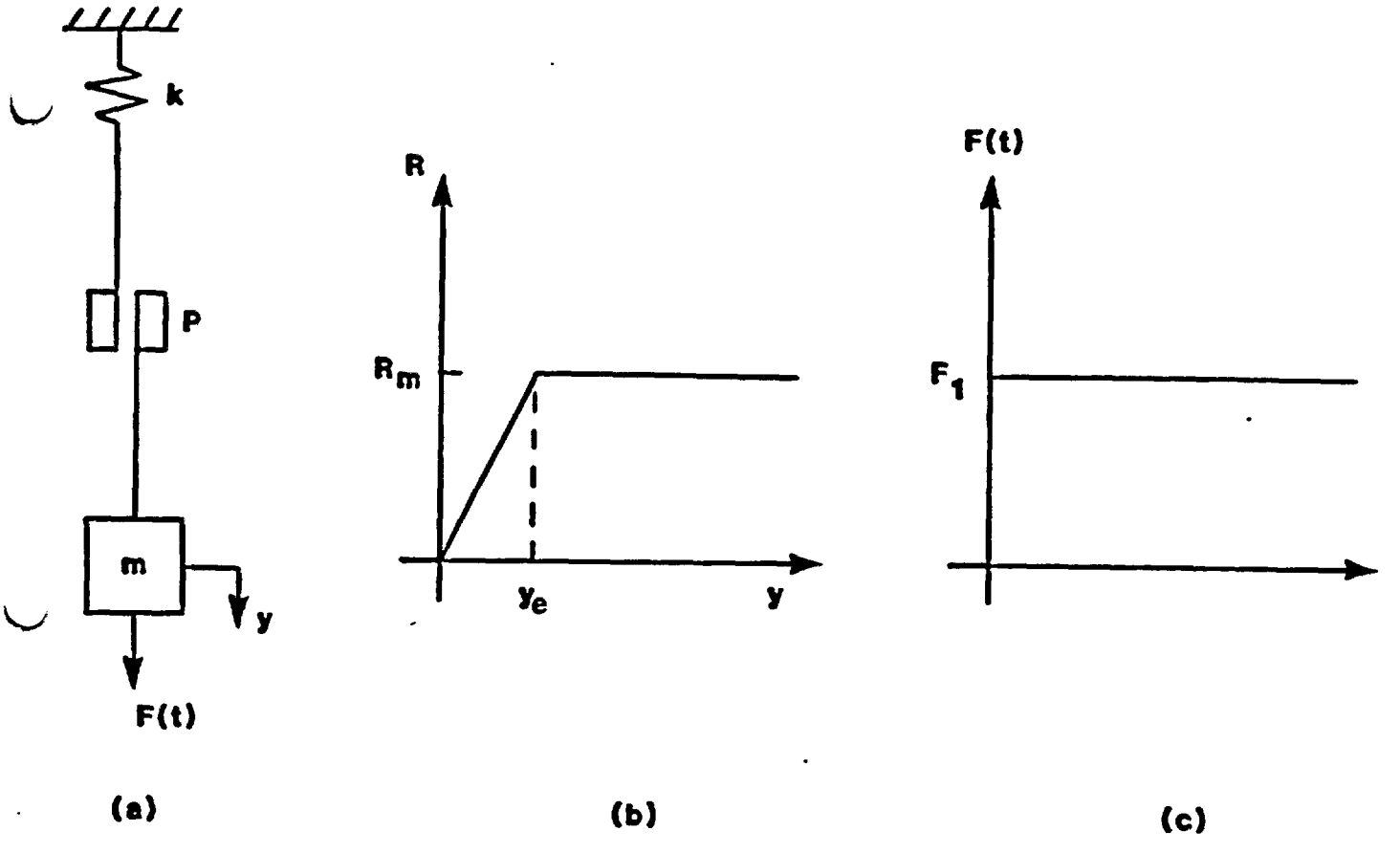

Figure 3.3-1

(a) Mechanical Model and (b) Force Versus Deflection (y) Response Characteristic of the Rod and c) the Load History (f) Versus Time (t). In (a) the Friction Joint p Slips When the Load Reaches R_m Representing Plastic Yielding of the Rod

where the differential Equation 67 is based on Newton's second law. The initial conditions state that the initial deflection and initial velocity of the mass are zero. The solution to the differential equation is

$$y = y_{st} + C_1 \text{ Sin } \omega t + C_2 \text{ Cos } \omega t \tag{70}$$

where $y_{st} = F_1/k$. Upon applying the boundary conditions, it is determined that

$$C_1 = 0 \tag{71}$$

$$C_2 = -y_{st} \tag{72}$$

So the solution can be written as

$$y = y_{st} (1-\text{Cos } \omega t) \tag{73}$$

In Equations 70 and 73, ω is the circular frequency defined as

$$\omega = \sqrt{\frac{k}{m}} \tag{74}$$

The second stage begins at time $t = t_e$ when the first stage is completed. Time range for the second stage which begins at zero when $t = t_e$ is established by defining a time variable t_1 for the second stage according to

$$t_1 = t - t_e \tag{75}$$

The differential equation for the second stage is

$$m\ddot{y} + R_m = F_1 \tag{76}$$

and the boundary conditions are

$$t_1 = 0, \quad y = y_e \tag{77}$$

$$t_1 = 0, \quad \dot{y} = y_{st}\ \omega\ \text{Sin}\ \omega t_e \tag{78}$$

The general solution to Equation 76 is

$$y = \left(\frac{F_1 - R_m}{2m}\right) t_1^2 + C_1 t_1 + C_2 \tag{79}$$

Equation 73, which is the dynamic response of the mass during the first stage, can be used to solve for the time t_e at which the transition between the two stages occurs:

$$t_e = \frac{1}{\omega}\ \text{Cos}^{-1}\left(1 - \frac{y_e}{y_{st}}\right) \tag{80}$$

Applying the boundary conditions of Equations 77 and 78 to the general solution of Equation 79 gives

$$y = \frac{1}{2m}(F_1 - R_m)\ t_1^2 + (y_{st}\ \omega\ \text{Sin}\ \omega t_e)\ t_1 + y_e \tag{81}$$

Assumptions. In the analysis, it is assumed that the rod material displays linear elastic response followed by perfectly plastic force versus displacement response.

Input Specifications. The problem is completely specified in terms of four parameters R_m, y_e, m, and F_1 which allow calculation of k and the other parameters such as ω.

R_m = force necessary to cause yielding in the rod (f) = 500,000 (lb_f)

y_e = axial elongation of the rod when plastic deformation begins (ℓ) = 0.1666 (in)

k = spring stiffness effort of the rod when deformation is in the elastic range (f/ℓ)
= R_m/y_e = 3.0×10^6 (lb/in)

m = mass attached to the rod
= 30,000 (lb_f-sec^2/in)

F_1 = magnitude of uniform tensile force applied to the mass = 3,000,000 (lb_f)

Output Specifications. The output should be the displacements as a function of time. This can be determined by using a structural analysis computer program that will simulate elastic and plastic material behavior for this structure and its loading. Calculated values can be compared with those given in Table 3.3-1.

For these values, Equation 74 gives

ω = 10 (1/sec)

and Equation 80 gives

t_e = 0.058568 (sec)

Table 3.3-1

Displacement as a Function of Time

Time (Seconds)	Displacement (Inches)
0.000	.00000
0.010	0.00500
0.020	0.01993
0.030	0.04466
0.040	0.07894
0.050	0.12242
0.059	0.16667
0.060	0.17466
0.070	0.23530
0.080	0.30427
0.090	0.38157
0.100	0.46721
0.110	0.56118
0.120	0.66348
0.130	0.77412
0.140	0.89309
0.150	1.02039
0.160	1.15603
0.170	1.30000
0.180	1.45230
0.190	1.61294
0.200	1.78191
0.300	3.92994
0.400	6.91131
0.500	10.72601
0.600	15.37404
0.700	20.85541
0.800	27.17011
0.900	34.31814
1.000	42.29951

PROBLEM 3.3 DEFORMATION OF A THIN ROD SUBJECTED TO A STEP LOAD
FOR CASES WHERE F1 IS <,=,>, Rm

```
**************************************************
INPUT DATA                                      * NOTE: BE SURE RANGE
MASS "m" (lb.)                        3.00E+04  * PROTECT SWITCH IS
APPLIED FORCE "F1" (lb.)              3.00E+06  * ON (TYPE /WGPE).
YIELD FORCE "Rm" (lb.)                5.00E+05  * ALL CELLS EXCEPT
ROD ELONGATION @ START OF                       * E5-E9
PLASTIC DEFORMATION "ye" (in.)        0.166666  * ARE PROTECTED.
**************************************************
-------------INTERMEDIATE CALCULATIONS-----------
                yst = F1/k =      1.000
                 k = Rm/ye =   3.00E+06
       OMEGA = @SQRT(k/m) =      10.00
te= @ACOS(1-ye/yst)/OMEGA =   0.058569 OK IF ="ERR" IF "F1"<"Rm"
--------------------------------------------------
```

TIME (seconds)	DISPLACEMENT (inches)
0.0000	.00000
0.0059	0.00171
0.0117	0.00685
0.0176	0.01540
0.0234	0.02732
0.0293	0.04257
0.0351	0.06111
0.0410	0.08287
0.0469	0.10778
0.0527	0.13574
0.058569	0.16667
0.0879	0.36427
0.1171	0.63334
0.1464	0.97388
0.1757	1.38588
0.2050	1.86934
0.2343	2.42427
0.2636	3.05066
0.2928	3.74852
0.3221	4.51784
0.3514	5.35862
0.4100	7.25458
0.4685	9.43639
0.5271	11.90407
0.5857	14.65760
0.6443	17.69698
0.7028	21.02222
0.7614	24.63332
0.8200	28.53027
0.8785	32.71308
0.9371	37.18175
0.9957	41.93627
1.0542	46.97665

LOTUS SPREADSHEET WP 3.6

This spreadsheet performs a stress analysis of a pretensioned body that experiences stress relaxation due to creep.

Theory

The engineering aspects of this spreadsheet are discussed in Section 3.6 of Reference 2 (see attached).

Spreadsheet

Input Data: Problem specifications are input by the user in cells D6 through D9.

Column B: Time, in years, is input by the user.

Column C: Time, in hours, is calculated using 8760 hours per year.

Column D: Axial stress in the bolt is calculated using equation 119.

A graph of axial stress as a function of time will appear on the screen when the F10 key is pushed.

A sample spreadsheet is shown in Figure 1.

SECTION 3.6, REFERENCE 2

3.6 Stress in a Pretensioned Body That Experiences Stress Relaxation Due to Creep

Problem Statement. The ends of a bolt are held a fixed distance apart for a long period of time. Initially, the bolt is tightened producing an initial stress of σ_0. The bolt material is 0.30% carbon steel, which is assumed to have a creep rate given by

$$\dot{\varepsilon}^c = k\sigma^n \tag{112}$$

where

$\dot{\varepsilon}_c$ = creep rate (1/hr)

k = creep constant (1/hr)

σ = axial stress component in bolt (lb/in^2)

n = creep exponent of stress ( )

The creep causes the elastic strain to decrease while the creep strain increases such that the sum of the two is always equal to a constant. The constant is the amount of elastic strain initially induced in the bolt by the initial stress σ_0 (see Figure 3.6-1 for a schematic of the bolt).

Objectives. The objective is to calculate the bolt stress as a function of time.

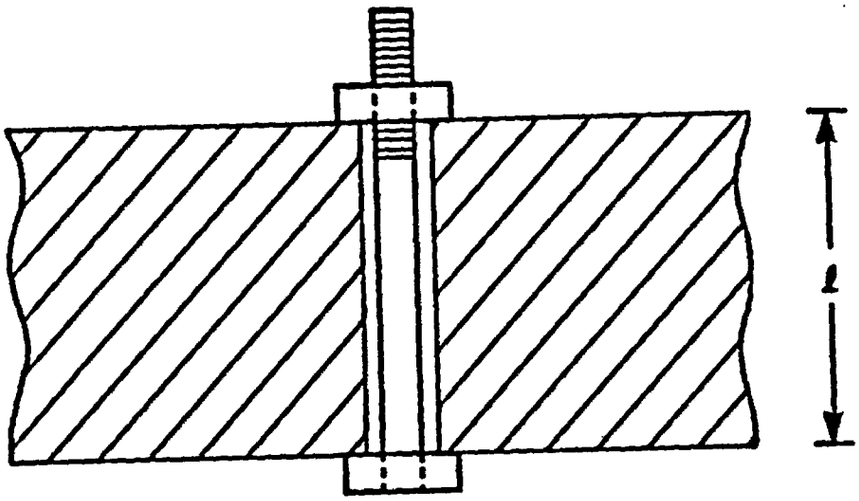

Figure 3.6-1

Bolt of Length l in Unloaded State Which Is Initially Stressed to σ_o = 10,000 psi and Allowed to Stress Relax Due to Creep

Analytical Solution. It is assumed that the initial stress causes only elastic strain on an instantaneous basis and that the total (i.e., instantaneous elastic and creep) strain in the bolt remains constant.

$$\varepsilon_o^{\,e} = \varepsilon^e + \varepsilon^c \tag{113}$$

where

$\varepsilon_o^{\,e}$ = initial elastic strain ( )

ε^e = elastic strain at any time ( )

ε^c = creep strain at any time (initially zero) ( )

The elastic strain is related to the stress by Hook's law

$$\varepsilon_o^{\,e} = \frac{\sigma_o}{E} \tag{114a}$$

$$\varepsilon^e = \frac{\sigma}{E} \tag{114b}$$

where

E = elastic modulus of bolt material (psi)

σ_o = initial axial stress component in bolt (psi)

σ = axial stress component in bolt at any time (psi)

Substitution of Equation 114 into Equation 113 gives

$$\frac{\sigma_0}{E} = \frac{\sigma}{E} + \varepsilon^c \tag{115}$$

and differentiating Equation 115 with respect to time gives

$$\frac{d\varepsilon^c}{dt} = -\frac{1}{E}\frac{d\sigma}{dt} \tag{116}$$

where the terms on the left side are the material creep rate. Combining Equations 112 and 115 eliminates the creep rate and gives the first order non-linear differential equation

$$-\frac{1}{kE}\ \sigma^{-n}\, d\sigma = dt$$

The initial condition is

$$t = 0 \qquad \sigma = \sigma_0 \tag{118}$$

and the solution is of the form

$$\sigma = \sigma_0 \left[kE(n-1)\sigma_0^{\,n-1}\ t + 1 \right]^{-1/(n-1)} \tag{119}$$

Assumptions. It is assumed that initially upon loading, the bolt strain is in the elastic range.

Input Specifications. For the following values of the parameters

$k = 4.78 \times 10^{-37}$ (1/hr)

$n = 6.9$ ( )

$E = 30 \times 10^{6}$ (psi)

$\sigma_0 = 10{,}000$ (psi)

Equation 119 becomes

$$\sigma = 10{,}000 \left[3.368 \times 10^{-5}\, t + 1\right]^{-0.1695} \tag{120}$$

Output Specifications. The output is the stress in the bolt as a function of time. The calculated values can be compared with the values given below.

Time (years)	Time (hours)	σ (psi)
0	0	10,000
1	8,760	9,571
2	17,520	9,244
3	26,280	8,981
4	35,040	8,762
10	87,600	7,922
50	438,000	6,267
100	876,000	5,603
200	1,752,000	4,996
500	4,380,000	4,284
1000	8,760,000	3,812

PROBLEM 3.6 STRESS IN A PRETENSIONED BODY THAT EXPERIENCES
STRESS RELAXATION DUE TO CREEP

**********			NOTE: BE SURE RANGE
INPUT DATA		*	PROTECT SWITCH IS
CREEP CONSTANT "k" (1/Hr)	4.78E-37	*	ON (TYPE /WGPE).
CREEP EXPONENT OF STRESS "n"	6.9	*	ALL CELLS EXCEPT
MODULUS OF ELASTICITY "E" (psi)	3.00E+07	*	D6-D9 & B15-B34
INITIAL AXIAL STRESS "sigma"(psi)	1.00E+04	*	ARE PROTECTED.
**********			

--------TIME--------		AXIAL STRESS IN BOLT
YEARS	HOURS	(psi)
0	0	10000
1	8760	9571
2	17520	9244
3	26280	8981
4	35040	8762
5	43800	8576
10	87600	7923
20	175200	7208
50	438000	6267
100	876000	5603
200	1752000	4996
500	4380000	4284
1000	8760000	3812
2000	17520000	3390
5000	43800000	2903
10000	87600000	2581
20000	175200000	2295
50000	438000000	1965
100000	876000000	1747
200000	1752000000	1554

MEMORANDUM

TO: Doug Vogt April 1, 1986

FROM: David Large DL

SUBJECT: Vist to NASA/GSFC

On Friday, March 28, I met for one and one-half hours with Mr. Keiji Tasaki, who works under Frank McGarry (Chief, Systems Development Branch, Flight Dynamics Division). We briefly discussed NASA's software QA procedures in general, and then concentrated on the procedures used by McGarry's group. Salient points from the conversation are summarized in this memo.

NASA is a very diverse agency. There are 10 major field centers, 9 in addition to Goddard. Each field center has its own specific software QA procedures. NASA headquarters, however, does publish a set of general guidelines for software QA. I will see if we can get a copy of that publication. Not only does each of the field centers operate more or less independently, there is no overall standard within each field center. That is, different branches within a given center might have different QA procedures. Just recently, the Office of Chief Engineer at NASA headquarters has begun to develop a "library" of software programs which can be interchanged among the different field centers. It's not clear whether part of this effort will involve an increased attempt to standardize software QA procedures.

Tasaki first pointed out to me that, with respect to the QA issue from a technical point of view, the size of a program is a critical parameter. The best approach to developing and testing a program is different for relatively small programs (less than 100K lines of code) as opposed to medium size (up to 1 million lines) or very large (above 1 million lines) programs. Most of the programs developed in the Flight Dynamics Division have several hundred thousand lines of code, take of the order of 2-3 years to develop, and may involve 20-25 person/years of effort. The testing phase, I infer, might take 3-6 months.

The Flight Dynamics Division software is the satellite "navigator", that is, it controls the attitude and orientation of the spacecraft in flight. It does not deal with data from experiments. Input to the program is telemetry data received from the satellite, and the output is telemetered back to the control systems on the satellite. Consequently, an important job in testing the software is the development of a separate program, called the telemetry simulator, which generates synthetic data to emulate the transponder's data transmitted from the satellite itself. These data can provide a quite accurate testing format, because known satellite positions are first stipulated, the data generated as the instruments on board would see it, and then "corrupted" to include effects of instrument bias, random noise, and the dropping of bits during transmission. Hence, the performance of the programs can be compared against the known (or the desired) position of the spacecraft.

The first step in the development of a new piece of software by this division is the generation of a report known as "functional requirements and specifications" document. This is created by the user group (people who will actually be running the satellite experiment and overseeing its launch) and indicates in quite detailed technical terms everything that they need the software to do. The next phase is for the Systems Development Branch to spend several months analyzing those requirements which then leads to a preliminary design phase in which the program is laid out conceptually. This is followed by a preliminary design review (PDR) meeting. This is a formal review in which the Systems Development Branch (SDB) people present their concept of what the program needs to do and how the programs to do it will be laid out. This review is presented to both the user group and upper management, and results in the identification of areas which need further explanation and/or study. Once those problems have been ironed out, the detail design phase is entered. During this phase the program format and interactions with all subcomponents are laid out in great detail. At the same time, the concepts of how the testing program and the telemetry simulation program will work are also laid out. The timespan from the production of the requirements document by the user group to the production of a detailed design report by the SDB is often of the order of 8-12 months. Following this, a critical design review is presented in which any remaining uncertainties about exactly how the program will be structured are cleared up. It is only at this point that any code actually is written. That coding effort often takes of the order of one calendar year with 10-15 people working on the code. Much of this work is done by contractors: Computer Sciences Corporation is the current contractor. Other which he mentioned that may get involved are TRW and General Electric.

Once the code is written, and judged to be complete and executable, they enter a systems testing phase. Here outputs from the telemetry simulator program are used to see that the program operates under "nominal conditions". That is, all conceivable data formats are tested, assuming that things are working more or less normally. Following that phase, the acceptance testing phase begins. In this phase, the SDB and the user group work closely together. The objective here is to "stress the sytem", including the most extreme cases that can be resonably anticipated. Also considered at this phase are any problems having to do with length of computing time, ability to accumulate extremely unusual data, and so forth; this involves going beyond the "nominal conditions" of the systems testing phase.

Once the acceptance testing phase is completed and any problems corrected, the user group signs off on the program. From then on, any bugs detected in the program are, in effect, the user group's problems, not the software creator's problem. At this point, it often happens that only 50-60% of the code has actually been tested – but, assuming this is done right, that should comprise 90-95% (or more) of the cases that will actually occur once the program is up and running with real data.

Tasaki did not have much to say about the general issues of software error detection and correcting. I got the impression that he seldom hears about problems with the programs following the official turning over of the software to the user groups. In that regard, he gave me the name of two individuals we might contact to talk about how they go about testing the programs and how

often they find bugs in them after they have been accepted. The names are: Gary Meyers, Mission & Network Support, Flight Dynamics Support Branch, 301/3445696; Al Gantt, Software Validation & Maintenance Section, Flight Dynamics Support Branch, 301/3445706.

Mr. Tasaki did give me one interesting reference, a man named Edward Joyce, who had contacted him just a few months earlier about anecdotal evidence he could give about problems caused by bugs in large-scale software programs. Mr. Joyce is apparently a freelance writer who is researching an article on the subject. I have written him to see if he has any material that we might use as illustrative case histories for the NRC.

Tasaki also volunteered to look for any documents that we might use that describe how various user groups within NASA control software errors. I'm not optimistic that he will come up with much in this regard, however. I would suggest that we try to talk to either Meyers or Gantt or both the next time one of us has reason to go to Washington. In the meantime, I'll let you know if I hear anything interesting from Mr. Joyce.

DBL:rs

General

Our estimate of costs through the end of March is:

Actual costs this month:	55K
Actual costs this fiscal year:	269K
Actual costs to date:	3,467K
Planned costs this fiscal year:	260K
Planned costs this month:	50K

Estimated costs include labor, labor additive, overhead, subcontractor costs, G&A and fee. These costs have not been confirmed by our accounting department.

Sincerely,

Douglas K. Vogt

Douglas K. Vogt
Project Manager

DKV:kg

Enclosures