Rec'd with letter dtd 10/7/94

INFORMATION COPY

DOE/RW-0351P

Office of Civilian Radioactive Waste Management

Waste Acceptance System Requirements Document (WASRD)

Revision 1

(E00000000-00811-1708-00001)

CONTROLLED COPY
CRWMS M&O / LAS VEGAS, NV
COPY NO. A/476
THIS IS A RED STAMP

UNCONTROLLED

March 1994

U.S. Department of Energy
Office of Civilian Radioactive Waste Management
Washington, DC 20585

102.8

94 10170159 940331

Printed with soy ink on recycled paper

ENCLOSURE . 1

Office of Civilian Radioactive Waste Management

WBS: 9.2.1
QA: QA
Page: 1 Of: 5

BCCB CHANGE DISPOSITION SUMMARY RECORD

1. BCP NUMBER	REV.	3. ORIGINATOR'S NAME	5. CHANGE LEVEL	6. PRIORITY LEVEL	7. DISPOSITION DATE
BCP-00-94-0001	00	D. Shelor / R. Milner	☐ 0 ☑ 1 ☐ 2 ☐ 3	☐ ROUTINE ☐ FIELD ☑ PRIORITY ☐ EMERGENCY ☐ URGENT	
2. DATE REC'D		4. ORIGINATOR'S ORGANIZATION			8. BCP TYPE
02/02/94		RW-30 / RW-40			☑ TECHNICAL ☐ MANAGEMENT ☐ DEVIATION ☐ ADMINISTRATIVE

9. BCP DESCRIPTION/TITLE

Revision 01 of the CRWMS Requirements Document (CRD) and System Requirements Documents (SRDs).

10. DISPOSITION RECOMMENDATION: ☐ ESAAB ☑ PROGRAM ☐ PO YMP ☐ PO MRS PROJECT ☐ FIELD ☐ CONTRACTOR

BOARD MEMBER SIGNATURE	RECOMMENDATIONS (See Block 10 Instructions)
L. Barrett, RW-2	
D. Horton, RW-3	
J. Saltzman, RW-4	
J. Saltzman, RW-5	
S. Rousso, RW-10	
R. Nelson, RW-20 SEE ATTACHMENT	
D. Shelor, RW-30	
R. Milner, RW-40	
S. Rousso, RW-50	

DIRECTIVE

11. CHANGE DISPOSITION:
☑ APPROVE ☐ DEFER* * SEE BLOCK 13
☒ APPROVE WITH CONDITIONS*
☐ DISAPPROVE* ☐ CANCEL*

12. BCCB CHAIRMAN SIGNOFF:
PRINT
SIGN DATE 2/10/94

13. CHAIRMAN'S JUSTIFICATION/CONDITIONS/LIMITATIONS

The MPC concept will be implemented as the primary alternative but will not preclude other operational concepts.

The BCP will be effective when the Decision Memorandum for the incorporation of the Multi-Purpose Canister (MPC) is approved.

☐ See Continuation Page ____

14. BCCB DIRECTIVE/IMPLEMENTING INSTRUCTIONS FOR DOCUMENT(s)

SEE ATTACHMENT

☐ See Continuation Page ____

15. BCCB DIRECTIVE/IMPLEMENTING INSTRUCTIONS FOR AFFECTED CONFIGURATION ITEM(s)

N/A

☐ See Continuation Page ____

0244 (12/03/9

Office of Civilian Radioactive Waste Management

WBS: 9.2.1
QA: QA
Page: 1a of 5

BCCB CHANGE DISPOSITION SUMMARY RECORD

1. BCP NUMBER	REV.	3. ORIGINATOR'S NAME	5. CHANGE LEVEL	6. PRIORITY LEVEL	7. DISPOSITION DATE
BCP-00-94-0001	00	D. Shelor / R. Milner	☐ 0 ☑ 1 ☐ 2 ☐ 3	☐ ROUTINE ☑ PRIORITY ☐ URGENT ☐ FIELD ☐ EMERGENCY	
2. DATE REC'D: 02/02/94		4. ORIGINATOR'S ORGANIZATION: RW-30 / RW-40			8. BCP TYPE: ☑ TECHNICAL ☐ MANAGEMENT ☐ DEVIATION ☐ ADMINISTRATIVE

9. BCP DESCRIPTION/TITLE

Revision 01 of the CRWMS Requirements Document (CRD) and System Requirements Documents (SRDs).

10. DISPOSITION RECOMMENDATION: ☐ OAAB ☑ PROGRAM ☐ PO YMP ☐ PO MRS PROJECT ☐ FIELD ☐ CONTRACTOR

BOARD MEMBER SIGNATURE	RECOMMENDATIONS (See Block 10 Instructions)
L. Barrett, RW-2	
D. Horton, RW-3	
J. Saltzman, RW-4	
J. Saltzman, RW-5	
S. Rousso, RW-10	
R. Nelson, RW-20	Robert M Nelson Jr
D. Shelor, RW-30	
R. Milner, RW-40	
S. Rousso, RW-50	

DIRECTIVE

11. CHANGE DISPOSITION:
☐ APPROVE ☐ DEFER* * SEE BLOCK 13
☑ APPROVE WITH CONDITIONS*
☐ DISAPPROVE* ☐ CANCEL*

12. BCCB CHAIRMAN SIGNOFF:
PRINT
SIGN DATE

13. CHAIRMAN'S JUSTIFICATION/CONDITIONS/LIMITATIONS

The MPC concept will be implemented as the primary alternative but will not preclude other operational concepts.

☐ See Continuation Page

14. BCCB DIRECTIVE/IMPLEMENTING INSTRUCTIONS FOR DOCUMENT(s)

SEE ATTACHMENT

☐ See Continuation Page

15. BCCB DIRECTIVE/IMPLEMENTING INSTRUCTIONS FOR AFFECTED CONFIGURATION ITEM(s)

N/A

☐ See Continuation Page

0244 (12/02/93)

Directive (continued)
BCP-00-94-0001, Rev. 00

14. The following documents shall be transmitted by the PBCCB Executive Secretary in accordance with applicable approved procedures for controlled distribution in a timely manner:

    (1) A00000000-00811-1708-00003, Rev. 1, DOE/RW-0406P, Civilian Radioactive Waste Management System Requirements Document (CRD);

    (2) E00000000-00811-1708-00001, Rev. 1, DOE/RW-0351P, Waste Acceptance System Requirements Document (WA-SRD);

    (3) D00000000-00811-1708-00002, Rev. 1, DOE/RW-0425, Transportation System Requirements Document (Trans-SRD);

    (4) C00000000-00811-1708-00002, Rev. 1, DOE/RW-0420, Monitored Retrievable Storage System Requirements Document (MRS-SRD); and

    (5) B00000000-00811-1708-00002, Rev. 1, DOE/RW-0404P, Mined Geologic Disposal System Requirements Document (MGDSRD).

Documents contained in the following actions are affected by incorporation of the MPC system into the CRD and the SRDs (1 through 5 above). The scheduling of subsequent changes to the following documents shall be implemented either by including change(s) into the next planned document revision (per document), or changing the document(s) through the Document Change Notice (DCN) process. These changes shall be coordinated with current FY94 budget availability and document revision schedules. The decision as to which process is used (Revision vice DCN) will depend on extent of change and timing as it pertains to effective change implementation. It shall be left to the discretion of the PBCCB Executive Secretary in coordination with document authors and cognizant AD/ODs as to which change process to employ.

All actions shall be assigned an action item identifier and shall be forwarded to each AD/OD for implementation. A formal transmittal of action item assignments will be transmitted by the PBCCB Secretary within 10 working days of approval of BCP-00-94-0001.

Action Items shall be tracked through closure by the PBCCB Secretariat Administrator.

Directive (continued)
BCP-00-94-0001, Rev. 00

(A) RW-30 is responsible for the following actions:

(1) Review the Program Management System Manual, DOE/RW-0043, Rev. 5 Program Structure to determine necessary changes appropriate for the MPC. Incorporate identified changes into the next planned revision (Rev. 6) of the document. If changes are not extensive, a DCN shall be distributed to effect the change(s);

(2) Review DOE/RW-0051P, Rev. 2, OCRWM Systems Engineering Management Plan. The section titled "The Application of Systems Engineering to CRWMS Development" shall be revised to reflect development of the MPC - related systems. Also review the balance of the document for other changes resulting from the approval of BCP-00-94-0001. Incorporate necessary changes into the next planned revision (Rev. 3) of the document. If changes are not extensive, a DCN shall be distributed to effect the change(s); and

(3) Update the CRWMS Interface Specification, A00000000-00811-6300-00001, to incorporate descriptions of interfaces that will change because of incorporation of the MPC system into the CRWMS technical baseline. Incorporate changes into the next planned revision of the document. If changes are not extensive, a DCN shall be distributed to effect the change(s).

(4) Prepare record packages for this BCP and collect all documentation that supports the MPC decision including the Decision Memoranda and all significant conceptual studies and analyses to provide to RW-20.

DIRECTIVE (continued)
BCP-00-94-0001. Rev. 00

(B) RW-20 is responsible for the following actions:

(1) Review DOE/ RW-0223, Rev. 3, Program Cost and Schedule Baseline, for changes to scope with respect to establishment of the MPC - based technical baseline and its impact to the YMSC MSA. Provide necessary changes to RW-10 for incorporation into the next planned revision (Rev. 4) of the document. If changes are not extensive, a DCN shall be distributed to effect the change(s). RW-20 shall contact the PBCCB Executive Secretary when this action is completed.

(2) RW-20 shall re-evaluate its cost and schedule milestones at the Project level and incorporate changes as necessary resulting from changes to the Program Cost and Schedule Baseline and approval of BCP-00-94-0001.

(3) Review DOE/RW-0313P, Yucca Mountain Site Characterization Project Plan, for necessary changes to site characterization resulting from approval of this BCP. Incorporate changes into the next planned revision of the document. If changes are not extensive, a DCN shall be distributed to effect the change(s).

(4) Ensure compliance with 10CFR60.21c and submit supporting record package for inclusion in the YMPO local records center to support future LA activities.

(C) RW-40 is responsible for the following actions:

(1) Review DOE/ RW-0223, Rev. 3, Program Cost and Schedule Baseline, for changes to scope with respect to establishment of the MPC - based technical baseline and its impact to the MRS MSA. Provide necessary changes to RW-10 for incorporation into the next planned revision of the document. If changes are not extensive, a DCN shall be distributed to effect the change(s).

DIRECTIVE (continued)
BCP-00-94-0001. Rev. 00

(2) Review C00000000-00811-4600-00004, MRS Project Plan dated 10/02/92. Change the cost, schedule and scope baselines for Key Decision (KD) # 1 to reflect the MPC system. The MRS mission described in KD # 0 may need to be re-defined. Incorporate required changes into the next planned revision of the document. If changes are not extensive, a DCN shall be distributed to effect the change(s).

(3) RW-40 shall re-evaluate its cost and schedule milestones at the Project level and incorporate changes as necessary resulting from changes to the Program Cost and Schedule Baseline and approval of BCP-00-94-0001.

(D) RW-10 is responsible for the following action(s):

(1) Modify DOE/RW-0325P, Program WBS Dictionary to incorporate the MPC system.

(2) Coordinate with RW-20 to complete actions prescribed in section (B) (1) and (B) (2) above.

(3) Coordinate with RW-40 to complete actions prescribed in section (C)(1), (C) (2), and (C)(3) above.

Project Level MPC System Incorporation Actions

(E) RW-40 shall perform the following actions:

RW-40 shall review baseline documentation and ensure that documents reflect changes resulting from BCP-00-94-0001 approval. RW-40 shall ensure that Project level technical baseline documentation reflects changes in the Program level CRD and SRDs.

(F) The Yucca Mountain Site Characterization Project Office shall perform the following actions:

The YMP Project Office shall review baseline documentation and ensure that documents reflect changes resulting from BCP-00-94-0001 approval. The YMP Project Office shall ensure that Project level technical baseline documentation reflects changes in the Program level CRD and SRDs.

OFFICE OF CIVILIAN RADIOACTIVE WASTE MANAGEMENT
PROGRAM CHANGE CONTROL BOARD
REVISION/CHANGE RECORD

(1) DOCUMENT NUMBER: DOE/RW-0351P/E00000000-00811-1708-00001
(2) DOCUMENT TITLE: Waste Acceptance System Requirements Document

(3) REVISION DATE/ NUMBER	(4) BCP NUMBER	(5) REVISION/CHANGE DESCRIPTION	(6) PAGES AFFECTED
Rev. 1 March 1994	BCP-00-94-0001	Incorporate the Multi-Purpose Canister (MPC) concept into the CRWMS technical baseline.	All

TABLE OF CONTENTS

Page

1. SCOPE 1

1.1 IDENTIFICATION 1
1.2 PURPOSE OF CRWMS REQUIREMENTS DOCUMENTS 1

1.2.1 CRWMS Requirements Hierarchy 1
1.2.2 Purpose of WA-SRD 3

1.3 CRWMS/WA OVERVIEW 3

1.3.1 WA Mission 3
1.3.2 WA Background 3
1.3.3 WA Functions 4
1.3.4 Waste Acceptance System Concept 5

1.4 DOCUMENT ORGANIZATION AND DESCRIPTION 6

1.4.1 Document Organization 6
1.4.2 Document Description 7

2. APPLICABLE DOCUMENTS 9

2.1 FEDERAL LAWS AND DOCUMENTS 9

2.1.1 Laws, Statutes, U. S. Codes, and Treaties 9
2.1.2 Code of Federal Regulations and Executive Orders 9
2.1.3 Other Documents, Orders, and Directives 10

2.2 [Reserved] 11
2.3 [Reserved] 11
2.4 NON-GOVERNMENT DOCUMENTS 11

2.4.1 [Reserved] 11
2.4.2 Other Publications 11

2.5 OTHER REFERENCES 12

3. REQUIREMENTS 15

3.1 SYSTEM DEFINITION 15

TABLE OF CONTENTS (Continued)

Page

3.1.1 Waste Acceptance System Functions - Accept Waste 15
3.1.2 Waste Acceptance Functional Relationships 15
3.1.3 System Description 17
3.1.4 Function to Architecture Cross-Reference 17
3.1.5 Major Considerations and Assumptions 24

3.2 CHARACTERISTICS 26

3.2.1 Performance Characteristics 26

3.2.1.1 SNF and HLW Acceptance 26
3.2.1.2 SNF Receipt 26
3.2.1.3 HLW Receipt 26
3.2.1.4 Initial Operations 26
3.2.1.5 Receipt Rate 27

3.2.2 [Reserved] 27
3.2.3 Interface Requirements 27

3.2.3.1 [Reserved] 27
3.2.3.2 Interfaces with Other CRWMS Elements 27

3.2.4 [Reserved] 33
3.2.5 [Reserved] 33
3.2.6 [Reserved] 33
3.2.7 [Reserved] 33
3.2.8 [Reserved] 33
3.2.9 [Reserved] 33

3.3 DESIGN AND CONSTRUCTION 33

3.3.1 [Reserved] 33
3.3.2 [Reserved] 33
3.3.3 [Reserved] 34
3.3.4 [Reserved] 34
3.3.5 [Reserved] 34
3.3.6 Safety 34
3.3.7 Human Factors Engineering 34
3.3.8 Methods and Controls 34

TABLE OF CONTENTS (Continued)

Page

3.3.8.1 Material Management 34
3.3.8.2 Inventory Control 34

3.3.9 Government Furnished Property 35
3.3.10 Computer Resources 35
3.3.11 Environmental Protection Requirements 35

3.4 DOCUMENTATION 35

3.4.1 [Reserved] 35
3.4.2 [Reserved] 35
3.4.3 [Reserved] 35
3.4.4 Test Plans and Procedures 35
3.4.5 Quality Assurance Documentation 35
3.4.6 [Reserved] 36
3.4.7 Computer Documentation 36
3.4.8 Records Management 36

3.5 [Reserved] 36
3.6 PERSONNEL AND TRAINING 36

3.6.1 [Reserved] 36
3.6.2 Training 36

3.6.2.1 General Requirements 36

3.7 SEGMENT REQUIREMENTS 37

3.7.1 Contract/Agreement Management Segment 37

3.7.1.1 Contract/Agreement Management Segment Description 37
3.7.1.2 Contract/Agreement Management Segment Requirements 38

3.7.2 Waste Fund Management Segment 50

3.7.2.1 Waste Fund Management Segment Description 50
3.7.2.2 Waste Fund Management Segment Requirements 50

TABLE OF CONTENTS (Continued)

Page

3.7.3 Waste Acceptance Management Segment 51

3.7.3.1 Waste Acceptance Management Segment Description 51
3.7.3.2 Waste Acceptance Management Segment Requirements 52

3.7.4 Support Segment 54

3.7.4.1 Support Segment Description 54
3.7.4.2 Support Segment Requirements 55

3.8 PRECEDENCE 56
3.9 QUALIFICATION/QUALITY ASSURANCE 56

4. CONFORMANCE VERIFICATION 59

4.1 RESPONSIBILITIES 59
4.2 METHODS 59
4.3 CROSS-REFERENCE 60

5. PREPARATION FOR OPERATIONS 71

5.1 KEY DECISIONS 71
5.2 REQUIREMENTS 71

6. NOTES 73

6.1 GLOSSARY 73
6.2 ACRONYMS AND ABBREVIATIONS 78
6.3 REQUIREMENTS CROSS-REFERENCE 80

APPENDIX A WA Function Descriptions A-1

APPENDIX B WA Function Allocation Table B-1

LIST OF FIGURES

Page

1-1. Program-level System Requirements Documents 2

1-2. CRWMS Waste Flow 6

3-1. 1. Manage Waste Disposal Function Flow Diagram 18

3-2. 1.1 Accept Waste Function Flow Diagram 19

3-3. N-Square Chart for 1. Manage Waste Disposal 20

3-4. N-Square Chart for 1.1 Accept Waste 21

3-5. CRWMS Architecture 22

3-6. WA Architecture 23

LIST OF TABLES

Page

3-1. Waste Acceptance Function List 16

3-2. SNF Characteristics for MPCs 25

3-3. Waste Acceptance Capability 28

3-4. WA-Transportation Interfaces 32

3-5. WA-OSTS Interfaces 33

4-1. Verification Matrix 60

6-1. Requirements Cross-Reference by SRD Paragraph 80

6-2. Requirements Cross-Reference by CRD Paragraph 89

6-3. Requirements Cross-Reference by Source Document 93

1. SCOPE

1.1 IDENTIFICATION

This Waste Acceptance System Requirements Document (WA-SRD) describes the functions to be performed and the technical requirements for a Waste Acceptance System for accepting spent nuclear fuel (SNF) and high-level radioactive waste (HLW) into the Civilian Radioactive Waste Management System (CRWMS). The WA-SRD addresses the requirements for the acceptance of bare SNF, SNF loaded in multi-purpose canisters (MPCs), and HLW.

The development and control of the WA-SRD is subject to the requirements of the *OCRWM Quality Assurance Requirements and Description document* (QARD) (DOE/RW-0333P). As part of the technical requirements baseline, it is also subject to *OCRWM Baseline Management Plan* (BMP) (DOE/RW-0381P) controls. The WA-SRD has been revised in accordance with the *CRWMS M&O Technical Document Preparation Plan (TDPP) for the Revision of System Requirements Documents.*

1.2 PURPOSE OF CRWMS REQUIREMENTS DOCUMENTS

1.2.1 CRWMS Requirements Hierarchy

The OCRWM *Program Management System Manual* (PMSM) (DOE/RW-0043) and the *OCRWM Systems Engineering Management Plan* (SEMP) (DOE/RW-0051P) establish the technical document hierarchy (hierarchy of technical requirements and configuration baseline documents) for the CRWMS program. Figure 1-1 illustrates the program-level system requirements documents in this hierarchy. The *CRWMS Requirements Document* (CRD) (DOE/RW-0406P) is the top-level system requirements document. This set of documents establishes the system requirements to be addressed in the design of the system elements, one of which is Waste Acceptance.

Many of the technical requirements for the CRWMS are documented in the *Nuclear Waste Policy Act of 1982* (NWPA) and in a variety of Federal regulations, Department of Energy (DOE) directives and orders, and other Government documents. The CRD establishes the technical requirements for the entire program by summarizing source documentation that must be addressed and by deriving requirements not covered in the regulations, but necessary to accomplish the CRWMS mission. The CRD also defines the CRWMS by identifying top-level functions for each element, defining the top-level system architecture of the CRWMS, and by allocating the functions and requirements to the architectural elements of the system, including Waste Acceptance. In doing so, the CRD establishes the basis for the requirements to be addressed and expanded in the WA-SRD and in the system requirements documents for the other elements. Additionally, the CRD establishes the basis for identification of interfaces in the *CRWMS Interface Specification* (IFS).

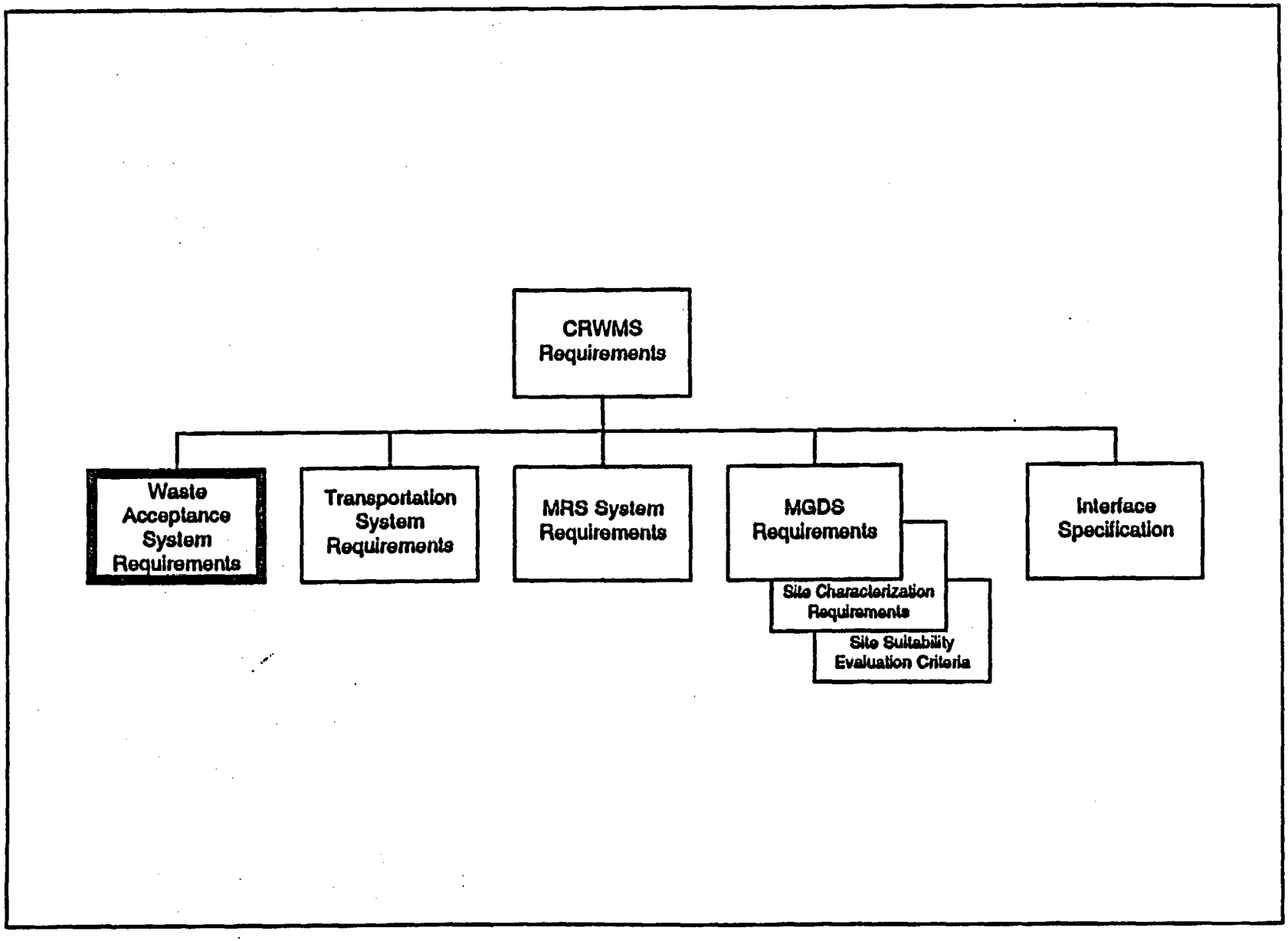

Figure 1-1. Program-level System Requirements Documents

1.2.2 Purpose of WA-SRD

The purpose of this document is to define the system-level requirements for Waste Acceptance (WA) consistent with the CRD. The document presents an overall description of WA, its functions, its segments, and the requirements allocated to the segments. The system-level interfaces with WA are also identified. The interface requirements will be published in a separate system-level interface specification.

1.3 CRWMS/WA OVERVIEW

The CRWMS is composed of four system elements. These elements, as identified in the CRD, are Waste Acceptance, Transportation, Monitored Retrievable Storage (MRS), and the Mined Geologic Disposal System (MGDS). Separate system-level requirements documents are written for each system element.

While WA is defined as a system element within the CRWMS technical baseline, it is not required to physically handle nuclear waste for transport, storage, or disposal. WA administers the transfer of waste title from the Purchasers/Producers into the CRWMS and maintains material control and accountability of the waste accepted into the CRWMS.

1.3.1 WA Mission

The mission of WA is to manage the acceptance of SNF and HLW into the CRWMS from the Purchasers/Producers of such waste and to account for the inventory of the waste in the CRWMS.

1.3.2 WA Background

The NWPA assigned DOE the responsibility for managing the disposal of SNF and HLW of domestic origin. The process and the schedule for this program were specified initially in the NWPA. Additionally, a Presidential Memorandum dated April 30, 1985, stated that there was no compelling reason to build a separate repository for defense HLW; therefore, the waste will be emplaced in a civilian geologic repository. In the *Nuclear Waste Policy Amendments Act* (1987) (NWPAA), Yucca Mountain, Nevada, was designated for characterization as the candidate site for a geologic repository.

The NWPA defines SNF as the fuel that has been withdrawn from a nuclear reactor following irradiation, the constituent elements of which have not been separated by reprocessing. As used in this document, SNF is defined to include the nonfuel components and hardware as identified in 10CFR961. HLW is defined as the highly radioactive material resulting from the reprocessing of SNF. This includes liquid waste produced directly in reprocessing, any solid material derived from such liquid waste that contains fission products in sufficient concentrations, and other highly radioactive material that has been determined by the Nuclear Regulatory Commission, consistent with the law, to require permanent isolation. As used in this document, HLW is defined to include commercial and defense HLW. The CRWMS will accept both SNF and solidified HLW. Note that the 10CFR60 definition of HLW includes SNF.

In the NWPA, Congress identified that long-term storage of SNF in MRS facilities is a safe and reliable option for management of SNF. In the NWPAA, Congress authorized the Secretary of Energy to site, construct, and operate one MRS facility, and as stated in 10CFR72, the MRS facility will have an initial 40-year license term with the option for renewal by the Nuclear Regulatory Commission (NRC). The MRS facility is to provide temporary storage of SNF until the SNF is shipped to the geologic repository for permanent disposal. HLW will be shipped from the Producer sites directly to the geologic repository.

1.3.3 WA Functions

The following list represents the decomposition of the primary function of WA which is to Accept Waste. These functions are further decomposed in Section 3.1 and described in Appendix A. The *Physical System Requirements-Accept Waste* document (DOE/RW-0369) served as a reference for establishing these functions:

A. **Define Waste Acceptance Criteria.** Determine the conditions necessary to be met by the SNF/HLW, in order for DOE to be able to accept it for disposal including defining standard and nonstandard waste forms.

B. **Establish Contracts/Agreements.** Develop, execute, and maintain written agreements between DOE and Purchasers/Producers that include terms, conditions, and criteria for waste acceptance and related services, and responsibilities of each party.

C. **Plan for Waste Acceptance.** Establish and provide the data on SNF and HLW characteristics and the Purchasers/Producers site capabilities and requirements, as well as the CRWMS capabilities and requirements. Sub-functions include: Allocate Waste System Capacity; Identify Waste Location/Characteristics; and Define Site Interface Capabilities.

D. **Observe Waste Preparations.** Verify the identified waste to be delivered is in agreement with its corresponding documentation. Verification may be accomplished by certification by the Purchaser/Producer and/or by independent direct methods including observation by DOE representatives.

E. **Accept Waste Title/Documentation.** Transfer documents between DOE and the Purchaser/Producer at the time of acceptance. Documents include certification of cask transportation readiness. Confirm completeness and compliance, accept title to waste, and turn over to Transportation for off-site removal.

F. **Resolve Improperly Described Waste.** When a discrepancy is found with the waste after DOE/OCRWM has taken title to it, make arrangements with the Purchaser/Producer to correct the waste description.

G. **Provide Fee Collection.** Collect, verify, and assess the adequacy of fees paid into the Nuclear Waste Fund (NWF) and recommend adjustment of the fee, if necessary, in order to ensure full cost recovery. Fees for waste disposal services will be paid by the Purchasers/Producers. DOE will regularly review and verify the accuracy of all fees paid into the NWF.

H. **Control and Account for Waste Inventory.** Control, account for, and track the SNF and HLW inventory after it is accepted into the CRWMS and feed all systems that similarly track material control and accountability (MC&A) data records. Additionally, the SNF and HLW will be tracked prior to acceptance into the CRWMS.

1.3.4 Waste Acceptance System Concept

The top-level CRWMS function, "Manage Waste Disposal", means to direct or control any physical activity, operation, or process conducted to accept, and after acceptance, transport, store, or dispose of SNF or HLW. For planning, systems analysis, and conceptual design purposes, Manage Waste Disposal is broken down into four subfunctions that the CRWMS must perform. These are Accept Waste, Transport Waste, Store Waste, and Dispose of Waste. The four corresponding system elements of the CRWMS that have been identified to implement these functions are Waste Acceptance, Transportation, MRS, and MGDS.

Figure 1-2 is a pictorial description of the CRWMS waste flow, which is described in the following paragraphs.

Waste Acceptance has the responsibility of interfacing the CRWMS with the "Purchasers" (owners and generators of SNF from civilian reactors) and "Producers" (owners and generators of HLW). Purchaser is defined in 10CFR961.3 as any person, other than a Federal agency, who is licensed by the Nuclear Regulatory Commission to use a utilization or production facility under the authority of sections 103 or 104 of the Atomic Energy Act of 1954 (42USC2133, 2134) or who has title to SNF or HLW and who has executed a contract or other contractual agreement with DOE. Purchaser SNF includes Government-owned SNF from commercial industry and civilian development programs. Producer is defined in the CRD as any owner or generator of HLW resulting from commercial or defense atomic energy activities.

The Waste Acceptance System will maintain records for the waste acceptance capacity, maintain records of the waste locations and characteristics, verify that the waste has been properly described, manage the contract/agreement process with the Purchasers/Producers, develop schedules for waste preparation and waste acceptance activities, verify that the waste is in the proper form for acceptance into the CRWMS, and, finally, accept title to the waste from the Purchasers/Producers. After the waste has been accepted into the CRWMS, it will be delivered by the Transportation system to the MRS facility or MGDS. WA will maintain material control and accountability for the CRWMS and track the waste inventory through the CRWMS.

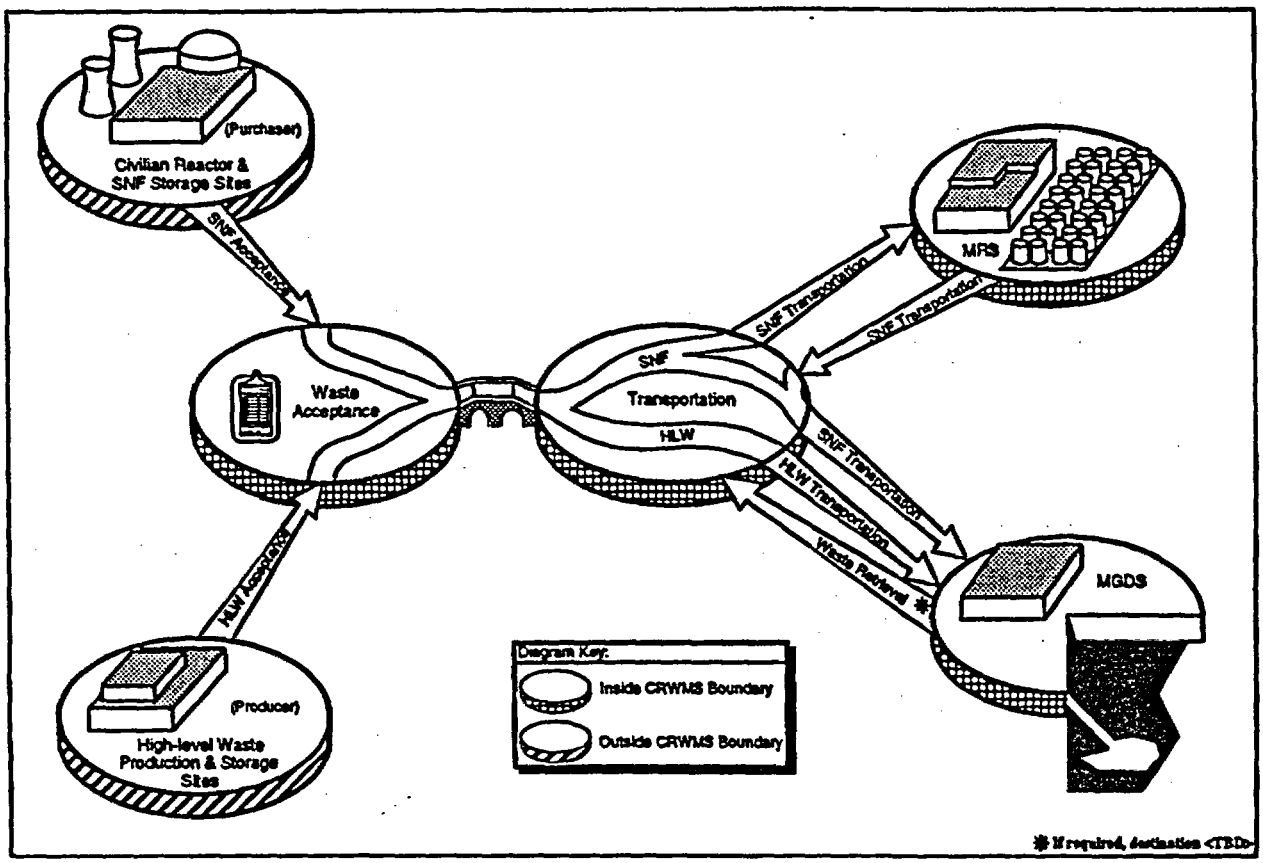

Figure 1-2. CRWMS Waste Flow

1.4 DOCUMENT ORGANIZATION AND DESCRIPTION

1.4.1 Document Organization

The WA-SRD is organized as follows:

A. **Section 1: Scope.** This section presents the system overview including the WA mission and system concept.

B. **Section 2: Applicable Documents.** This section identifies documents that are specifically related to various requirements of WA. The documents are included to provide requirement traceability to the source documents and are not to be incorporated as requirements themselves.

C. **Section 3: Requirements.** This section begins with a system definition and contains all requirements of WA at the system-level except for the preparation for operation requirements in section 5, and the requirements in the Appendices. Performance characteristics and interface requirements are presented. Documentation and training requirements are addressed. A breakout of requirements for each segment follows these requirements. Qualification requirements, including requirements for quality assurance, are also provided.

D. **Section 4: Conformance Verification.** This section addresses conformance verification and includes a cross-reference matrix to define how conformance with each requirement of sections 3 and 5, and appendices is to be verified.

E. **Section 5: Preparation for Operations.** This section contains requirements for preparation of the system for waste acceptance and operations.

F. **Section 6: Notes.** This section contains material that is explanatory in nature and that is nonbinding on WA development.

G. **Appendices:** Data included in the appendices are binding with regard to WA requirements and may be changed only through the formal document change procedures. The requirements presented in the Appendices are referenced in either section 3 or 5. This document includes two appendices:

Appendix A: WA Function Descriptions
Appendix B: Allocation of Functions to Architecture

1.4.2 Document Description

The central purpose of the WA-SRD is to establish the system-level requirements baseline for WA. As indicated in the outline in section 1.4.1, section 3 of the document is the primary location of the requirements, although some appear in section 5 and the appendices. The requirements and source documents allocated to WA by the CRD are addressed in expanded form. Requirements are included that have been derived to meet the system mission. Derived requirements have also been included that are regulatory requirements for another system element (e.g., MRS) that have been determined to be applicable to WA. Section 3.1 establishes the description of the system in terms of functions and segments and the relationship between the two. Sections 3.2 to 3.6 address interface and specialty engineering requirements applicable to WA. Specialty engineering disciplines include safety, human factors, and security. Section 3.7 contains requirements associated with specific WA segments.

The statement of a requirement is followed by the identification, in square brackets, of the original source document from which the requirement is derived. When no source document is identified, the WA-SRD is the authority for the requirement, and the identification and determination of the requirement is documented on Issue Clarification and Derived Requirements Documentation Forms in the Quality Assurance (QA) record for the WA-SRD. In these instances, the requirement is labeled [Derived]. Additionally, the legal or regulatory basis for

requirements is documented on Requirements Allocation Sheets and Design Constraint Sheets in the QA record for the WA-SRD; these records are not included within the WA-SRD. These sheets provide a statement of the requirement as it appears in the WA-SRD and, where applicable, provide a rationale for any interpretation of the basic requirement.

A fundamental approach of the WA-SRD is to provide statements of the requirements that give clear engineering direction that are verifiable and do not depend upon the context in which they were originally presented. Inasmuch as the WA System is evolving, some of this can only be done on an iterative basis. As a result, some requirements in early versions of requirements documents contain specifics that are still to be determined and are labeled <TBD>. In other instances, engineering judgment may permit a tentative statement as to values to be used for initial design work. In these instances, the requirement is labeled <TBR> (to be resolved).

2. APPLICABLE DOCUMENTS

The documents identified in sections 2.1 - 2.4 are specifically referred to or have provided the basis for requirements contained in the WA-SRD. These documents are not to be incorporated as requirements themselves.

For each document, the issue in effect on the date of the approval of this requirements document forms a part of the requirements to the degree specified herein. Each lower level design requirements document is to use revisions and issues of source documents that reflect the date of approval of that design requirements document.

Section 2.5 identifies reference materials that have not been used as sources of requirements, but have contributed to the development of the WA-SRD in other ways.

2.1 FEDERAL LAWS AND DOCUMENTS

The following are used as sources of requirements in the WA-SRD.

2.1.1 Laws, Statutes, U. S. Codes, and Treaties

A.	29USC651 et.seq.	Occupational Safety and Health Act
B.	42USC10101 et.seq.	Nuclear Waste Policy Act of 1982 and Nuclear Waste Policy Amendments Act of 1987

2.1.2 Code of Federal Regulations and Executive Orders

A.	10CFR40	Domestic Licensing of Source Material
B.	10CFR50	Domestic Licensing of Production and Utilization Facilities
C.	10CFR60	Disposal of High-Level Radioactive Wastes in Geologic Repositories
D.	10CFR71	Packaging and Transportation of Radioactive Material
E.	10CFR72	Licensing Requirements for the Independent Storage of Spent Nuclear Fuel and High-Level Radioactive Waste

F.	10CFR75	Safeguards on Nuclear Material - Implementation of US/IAEA Agreement
G.	10CFR961	Standard Contract for Disposal of Spent Nuclear Fuel and/or High-Level Radioactive Waste
H.	40CFR261	Identification and Listing of Hazardous Waste
I.	40CFR262	Standards Applicable to Generators of Hazardous Waste
J.	49CFR172	Hazardous Materials Table, Special Provisions, Hazardous Materials Communications, Emergency Response Information, and Training Requirements
K.	49CFR173	Shippers--General Requirements for Shipments and Packagings

2.1.3 Other Documents, Orders, and Directives

A.	DOE Order 1324.2	Records Disposition
B.	DOE Order 3790.1A	Federal Employee Occupational Safety and Health Program
C.	DOE Order 4700.1	Program Management System
D.	DOE/RW-0005	Mission Plan for the Civilian Radioactive Waste Management Program
E.	DOE/RW-0194P	Records Management Policies and Requirements
F.	DOE/RW-0316P	Draft Mission Plan Amendment September 1991
G.	DOE/RW-0328P	Acceptance Priority Ranking December 1991
H.	DOE/RW-0333P	OCRWM Quality Assurance Requirements and Description

I.	DOE/RW-0406P	CRWMS Requirements Document (CRD) (A00000000-00811-1708-00003)
J.	DOE/RW-0412	1992 Annual Capacity Report
K.	MOA RW/DP	Memorandum of 7/14/86 of Policy for Shipping Defense High-Level Waste (DHLW) to a Civilian Radioactive Waste Repository
L.	MOA NS/RW	Memorandum of 4/16/92 on Nuclear Safety Requirements
M.	Presidential Memo	Memorandum of 4/30/85 on Disposal of Defense Waste in a Commercial Repository

2.2 [Reserved]

2.3 [Reserved]

2.4 NON-GOVERNMENT DOCUMENTS

The following are used as sources of requirements in the WA-SRD.

2.4.1 [Reserved]

2.4.2 Other Publications

A. A00000000-01717-2200-00001 - Operational Throughput for the Multi-Purpose Canister System

B. MTR 10090 (ESD-TR-86-278) - Guidelines for Designing User Interface Software, S.L. Smith and J.N. Mosier, 1986

C. ORNL/Sub/89-SD841/2 - Acceptance of Canisters of High-Level Waste by the Federal Waste Management System

D. A00000000-01717-6700-00001 - Concept of Operations for the Multi-Purpose Canister System

2.5 OTHER REFERENCES

In addition to the above source documents, the following program documents were used as reference material for the initial development of this document. These documents have not been used as sources of requirements.

A.	10CFR962	Byproduct Material
B.	40CFR191	Environmental Radiation Protection Standards for Management and Disposal of Spent Nuclear Fuel, High-Level Radioactive Waste and Transuranic Wastes
C.	42USC2001 et.seq.	Atomic Energy Act
D.	42USC6901 et.seq.	Resource Conservation and Recovery Act
E.	ANSI N14.5-1987	American National Standard for Leakage Tests on Packages for Shipment of Radioactive Materials
F.	DOE/EA-0179	Environmental Assessment Waste Form Selection for Savannah River HLW, 1982
G.	DOE/RW-0184	Characteristics of Potential Repository Wastes, Revision 1, July 1992
H.	DOE/RW-0187	Draft Mission Plan Amendment June 1988
I.	DOE/RW-0199	Site Characterization Plan
J.	DOE/RW-0247	Report to Congress on Reassessment of the Civilian Radioactive Waste Management Program
K.	DOE/RW-0253	Program Cost and Schedule Baseline, Revision 3, September 1992
L.	DOE/RW-0260	Waste Acceptance Preliminary Specifications for the Defense Waste Processing Facility High-Level Waste Form, Revision 1, July 1989

M.	DOE/RW-0261	Waste Acceptance Preliminary Specifications for the West Valley Demonstration Project High-Level Waste Form, Revision 1, January 1990
N.	DOE/RW-0270P	Waste Management System Description Document (WMSD), March 1990
O.	DOE/RW-0369	Physical System Requirements - Accept Waste, Revision 0, August 31, 1992
P.	DOE/RW-0381P	Baseline Management Plan
Q.	DOE/RW-0051P	System Engineering Management Plan
R.	DOE Order 6430.1A	General Design Criteria
S.	Federal Register	Volume 52 Number 161 (August 20, 1987) Civilian Radioactive Waste Management; Calculating Nuclear Waste Fund Disposal Fees for Department of Energy Defense Program Waste
T.	A00000000-01717-4600-00009	CRWMS M&O Technical Document Preparation Plan (TDPP) for the Revision of System Requirements Documents, Revision 2
U.	WSRC-TR-90-539	Nuclear Waste Product Consistency Test Method Version 3.0, Savannah River Laboratory, November 1990 [C.M. Jantzen]
V.	Compendium Paper	High-Level Nuclear Waste Borosilicate Glass: A Compendium of Characteristics, Draft, September 15, 1992 [Compiled and Edited by: J.C. Cunnane]
W.	DOE/RW-0425	Transportation System Requirements Document (Trans-SRD), Revision 1 (D00000000-00811-1708-00002)
X.	DOE/RW-0420	MRS System Requirements Document (MRS-SRD), Revision 1 (C00000000-00811-1708-00002)

Y.	DOE/RW-0404P	MGDS Requirements Document (MGDS-RD), Revision 1 (B00000000-00811-1708-00002)
Z.	A00000000-00811-6300-00001	CRWMS Interface Specification
AA.	DOE/RW-0043	Program Management System Manual, Revision 5
AB.	E00000000-01717-2200-00002	At-Reactor Dry Storage Issues, Revision 1, December 10, 1993
AC.	A20000000-00811-5705-00002	MPC Conceptual Design Report, Final Draft, September 30, 1993

3. REQUIREMENTS

3.1 SYSTEM DEFINITION

Sections 302(a)(1) and 302(a)(5) of the NWPA authorize the Secretary to enter into contracts with Purchasers and Producers and take title to their SNF and HLW as expeditiously as practicable upon request, in return for payment of fees.

The functions, function flow diagrams, N-Square diagrams, system description, cross-reference of the allocation of functions to segments, and assumptions to accomplish this task are contained in the following sections.

3.1.1 Waste Acceptance System Functions - Accept Waste

With the mission of WA identified as managing the acceptance of SNF and HLW into the CRWMS from the Purchasers/Producers of such waste and to account for the inventory of the waste in the CRWMS, a functional analysis activity was performed to identify the essential functions that the system must perform. *Physical System Requirements - Accept Waste* documented the first iteration of that functional analysis and was used as the primary reference source of the functions for Waste Acceptance (WA) identified in this document.

The overall function of WA is to Accept Waste. This function includes the activities necessary to meet the requirements for establishing the criteria for waste acceptance and all the preparation (including contractual) and operation activities to take title and maintain control and accountability of the waste in a manner that protects the health and safety of the public and maintains the quality of the environment.

Functions flowing from the Accept Waste function are listed in Table 3-1. The reference numbers following the function title are the function numbers used with the function descriptions contained in Appendix A, Waste Acceptance Function Descriptions. The reference numbers are provided for identification of level of indenture and are not intended to prescribe a sequencing of the identified functions.

3.1.2 Waste Acceptance Functional Relationships

Functional identification is accomplished in this document by the use of function flow diagrams to depict functional relationships, and by the use of N-Square diagrams to identify inputs and outputs of a function. Throughout the iterative system engineering process, each design phase involves a more progressively detailed functional analysis. The functions identified in this document are the system-level functions that are required to meet the mission.

Table 3-1. Waste Acceptance Function List

Function Title	Reference Number
Accept Waste	1.1
Define Waste Acceptance Criteria	1.1.1
Establish Contracts/Agreements	1.1.2
Plan for Waste Acceptance	1.1.3
Allocate Waste System Capacity	1.1.3.1
Collect Waste Data	1.1.3.1.1
Rank/Order Waste	1.1.3.1.2
Allocate Annual Capacity to Purchasers/Producers	1.1.3.1.3
Identify Waste Location/Characteristics	1.1.3.2
Evaluate Delivery Commitment Schedule (DCS)	1.1.3.2.1
Evaluate DCS Exchange Requests	1.1.3.2.2
Evaluate Request for Nonstandard Waste Delivery	1.1.3.2.3
Evaluate Final Delivery Schedule (FDS)	1.1.3.2.4
Define Site Interface Capabilities	1.1.3.3
Observe Waste Preparations	1.1.4
Observe Preliminary Waste Preparations	1.1.4.1
Verify Waste Description	1.1.4.2
Notify Purchaser/Producer of Improperly Described Waste	1.1.4.3
Accept Waste Title/Documentation	1.1.5
Resolve Improperly Described Waste	1.1.6
Provide Fee Collection	1.1.7
Control and Account for Waste Inventory	1.1.8
Perform Inventory Control	1.1.8.1
Provide Accountability	1.1.8.2
Provide Material Tracking	1.1.8.3

Figure 3-1 shows the function flow diagram for the primary functions of the CRWMS. Figure 3-2 shows the function flow diagram for the third level indenture, which identifies the top-level Waste Acceptance functions. Figures 3-3 and 3-4 show the N-Square diagrams for these same functions. Numbers in each function block correspond to appropriate function numbers as identified in Table 3-1. Additional function flow diagrams and N-Square diagrams are contained in Appendix A.

The function flow diagrams identify the primary interactions between the functions in accepting SNF and HLW. Additional function interactions are identified on the N-Square diagrams. On the N-Square diagrams, the Waste Acceptance functions appear in the bold outlined boxes on the diagonal. The double-lined boxes on the diagonal identify an interface with a function external to Waste Acceptance. Inputs to a function appear in the column above and below the function. Outputs from a function appear in the row to the left and right of a function.

The function flow diagrams are used in allocating functions to appropriate segments described in section 3.1.3. Section 3.1.4 summarizes this allocation process.

3.1.3 System Description

Waste Acceptance is an integral part of the total CRWMS in which all system elements, segments, and subsystems and facilities are optimized as parts of a single system. WA will interface the CRWMS with the Purchasers and Producers by establishing contracts or agreements to accept waste, define the waste criteria, develop schedules for waste acceptance, observe preparatory operations during the waste acceptance process, and perform other functions if determined necessary or desirable by future federal mandates, studies, analyses, operational requirements, etc. Figure 3-5 shows the relationship of WA to the CRWMS. The top-level architecture is depicted in Figure 3-6. Waste Acceptance is composed of the following segments:

A. Contract/Agreement Management
B. Waste Fund Management
C. Waste Acceptance Management
D. Support.

The segments are described in section 3.7 of this document. These segments are integrated during operation to ensure compliance with all requirements.

3.1.4 Function to Architecture Cross-Reference

The function flow diagrams are used in defining the segments identified in section 3.1.3. The segments are items that can accomplish similar functions. The requirements for the functions are reviewed and the segments are defined. Section 3.7 and Appendix B identify the functions that are to be performed by each of the segments of Waste Acceptance.

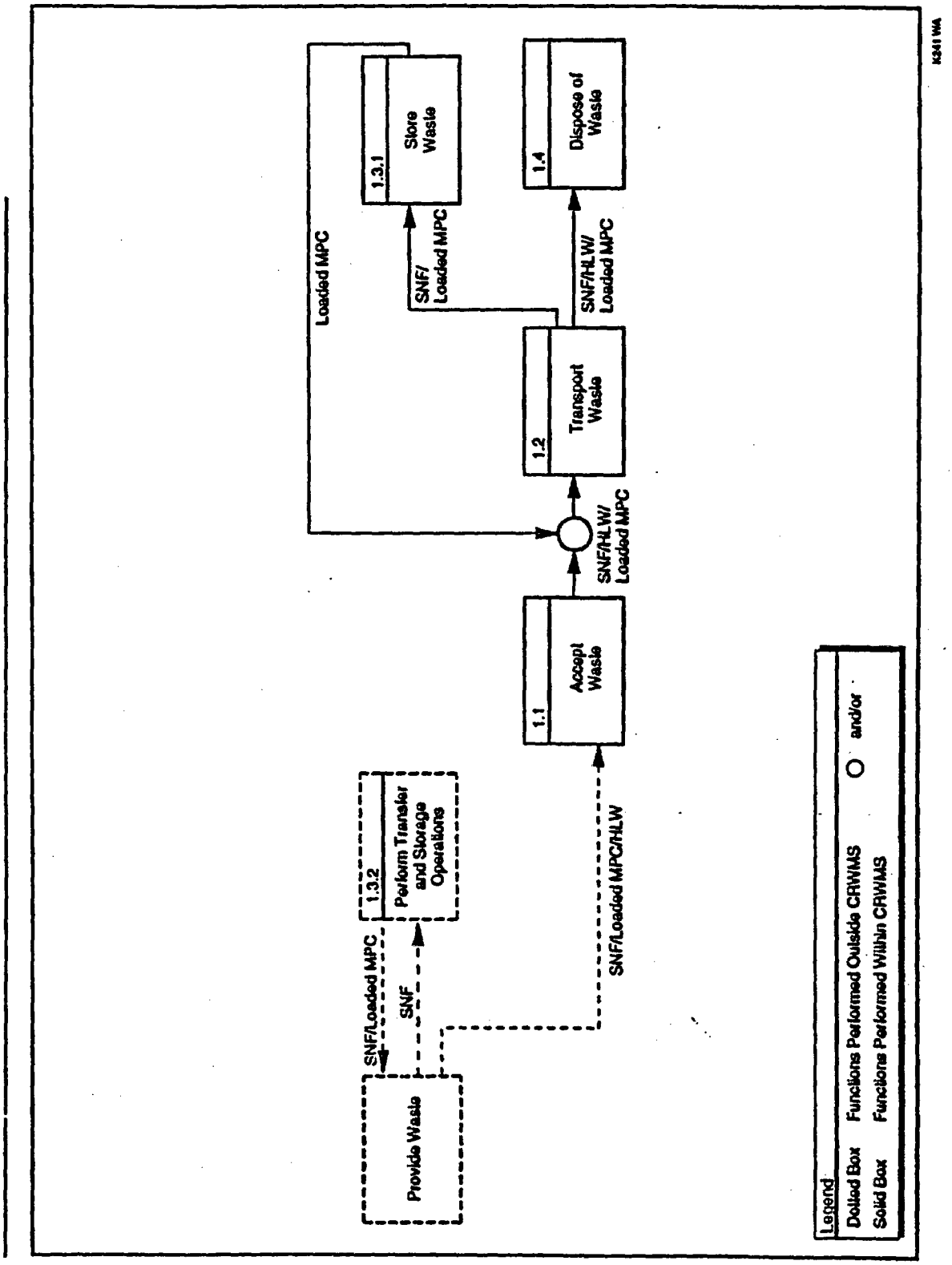

Figure 3-1. 1. Manage Waste Disposal Function Flow Diagram

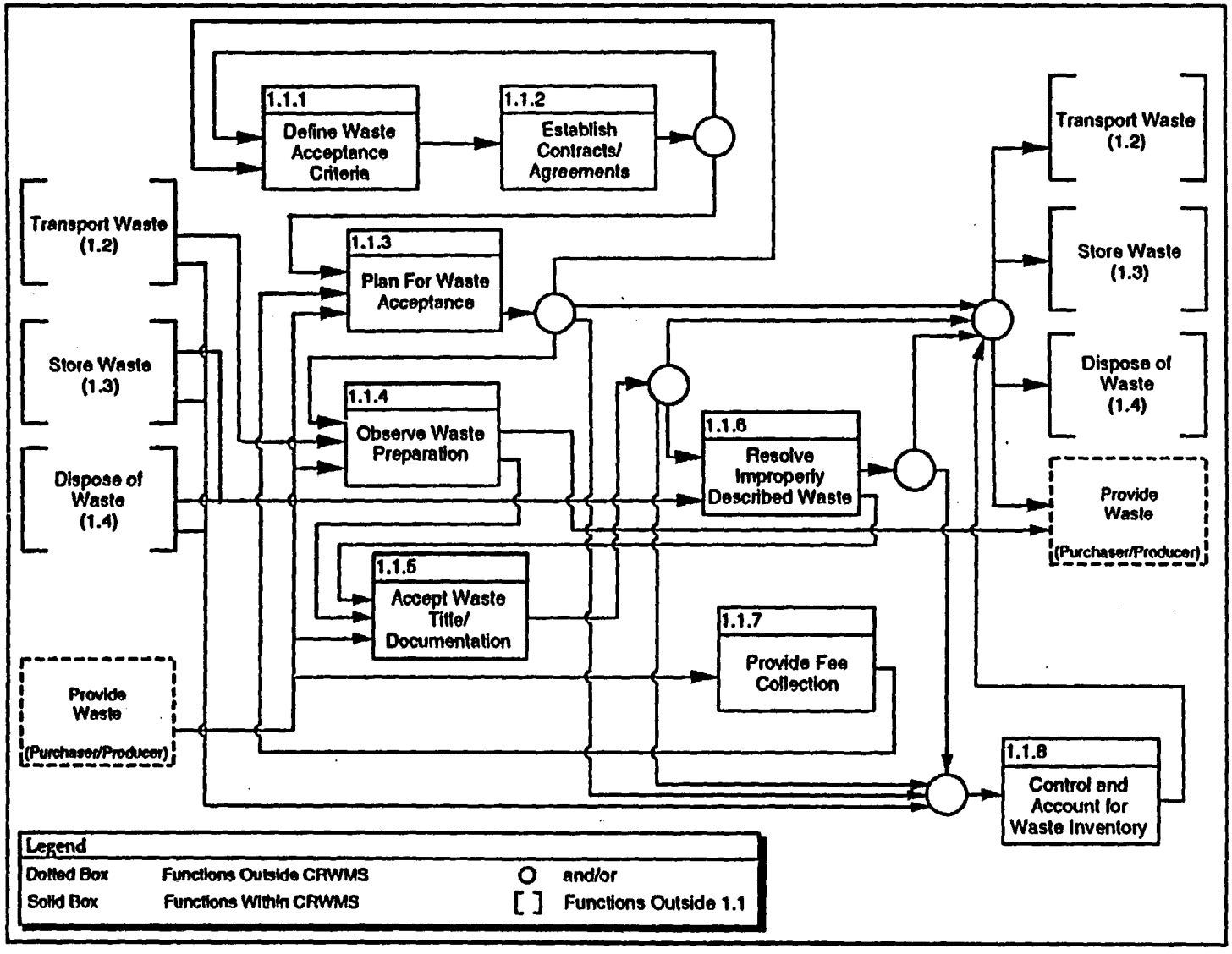

WASRD.F002 MPC

Figure 3-2. 1.1 Accept Waste Function Flow Diagram

Provide Private Industry Support	OSTS		Near or unloaded Transportation Cask Subsystems Equipment/Services Near MPCs	Utilities Equipment, Parts, and Supplies Vehicles Emergency response		Utilities Equipment, Parts, and Supplies Vehicles Emergency response	
	Provide Waste (Purchaser and Producer)	Contracts/Agreements SNF/HLW Loaded MPCs Fees Information Loaded or unloaded Transportation Cask Subsystems			SNF Empty MPCs Unloaded Transportation Cask Subsystems		
	Unloaded Transportation Cask Subsystems Information Contracts/Agreements Regulations Empty MPCs	Accept Waste 1.1	Loaded or unloaded Transportation Cask Subsystems Shipping Documents Information SNF/HLW Loaded MPCs	Information		Information	Information
Procurement Contracts		Unloaded Transportation Cask Subsystems Information Empty MPCs	Transport Waste 1.2	Loaded or unloaded Transportation Cask Subsystems Shipping Documents Information SNF Loaded or Empty MPCs		Loaded or unloaded Transportation Cask Subsystem Shipping Documents Information SNF/HLW Loaded or Empty MPCs	Radiation Radionuclides Information Shipments Emissions
Solid Waste Salvage Parts and Equipment Packaged Low-level Radwaste		Information	Loaded or unloaded Transportation Cask Subsystems Information Loaded MPCs	Store Waste at the MRS 1.3.1		Information	Radiation Radionuclides Emissions (Heat, Liquid Effluent) Information
	SNF Loaded MPCs Loaded Transportation Cask Subsystems				Perform Transfer and Storage Operations 1.3.2		
Solid Waste Salvage Parts and Equipment Packaged Low-level Radwaste		Information	Loaded or unloaded Transportation Cask Subsystems Information SNF/HLW Loaded MPCs	Information		Dispose of Waste 1.4	Radiation Radionuclides Emissions (Heat, Liquid Effluent) Information
		Laws Rules Orders Policies	Laws Rules Orders Policies License	Laws Rules Orders Policies License		Laws Rules Orders Policies License	Affect Environment (Physical, Legal, Public, etc.)

Legend: Dotted Line - Outside CRWMS Boundary Double Box - Functions Performed Outside CRWMS Solid Line - Within CRWMS Boundary Thick Box - Functions Performed Within CRWMS

Figure 3-3. N-Square Chart for 1. Manage Waste Disposal

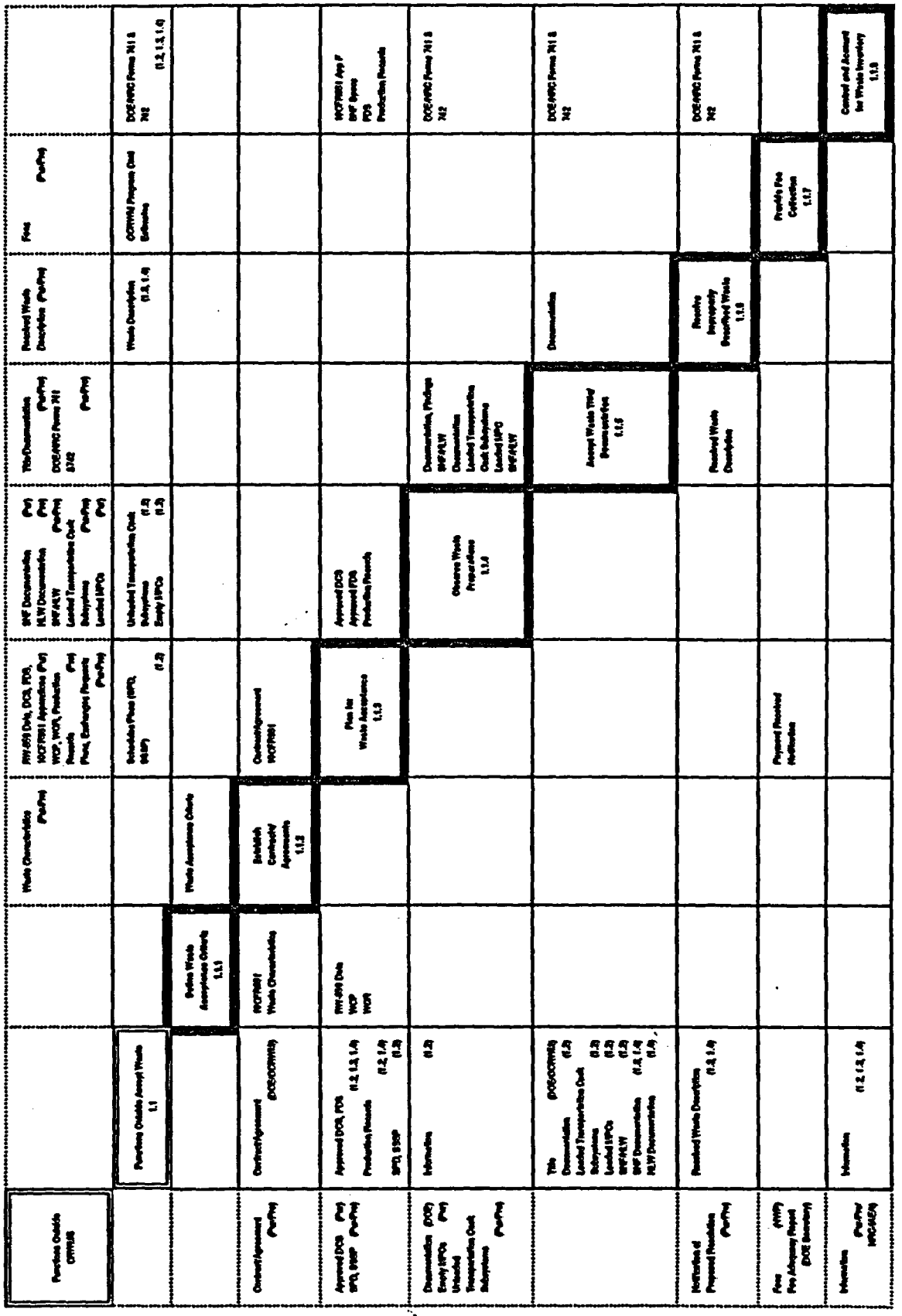

Figure 3-4. N-Square for Chart 1.1 Accept Waste

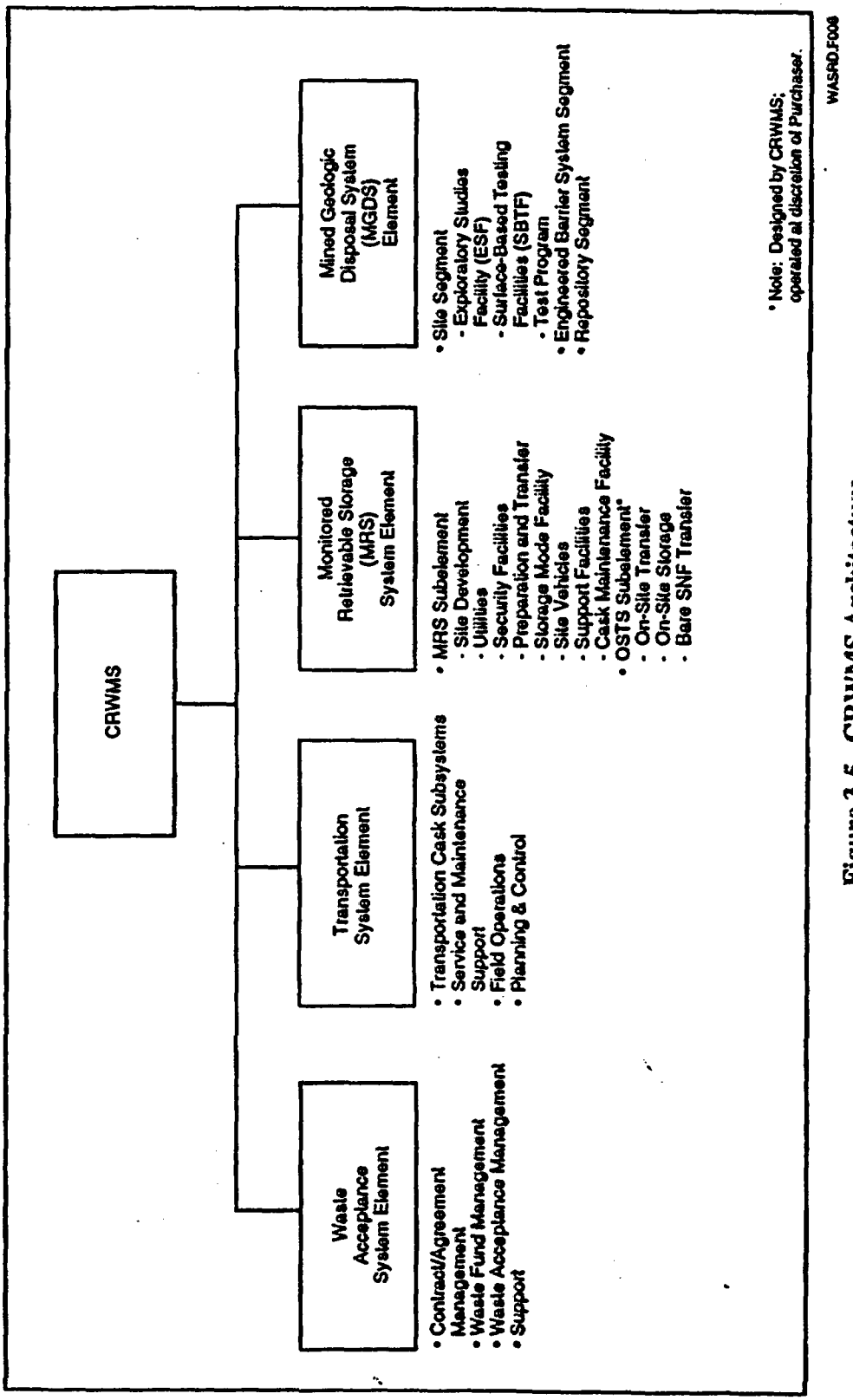

Figure 3-5. CRWMS Architecture

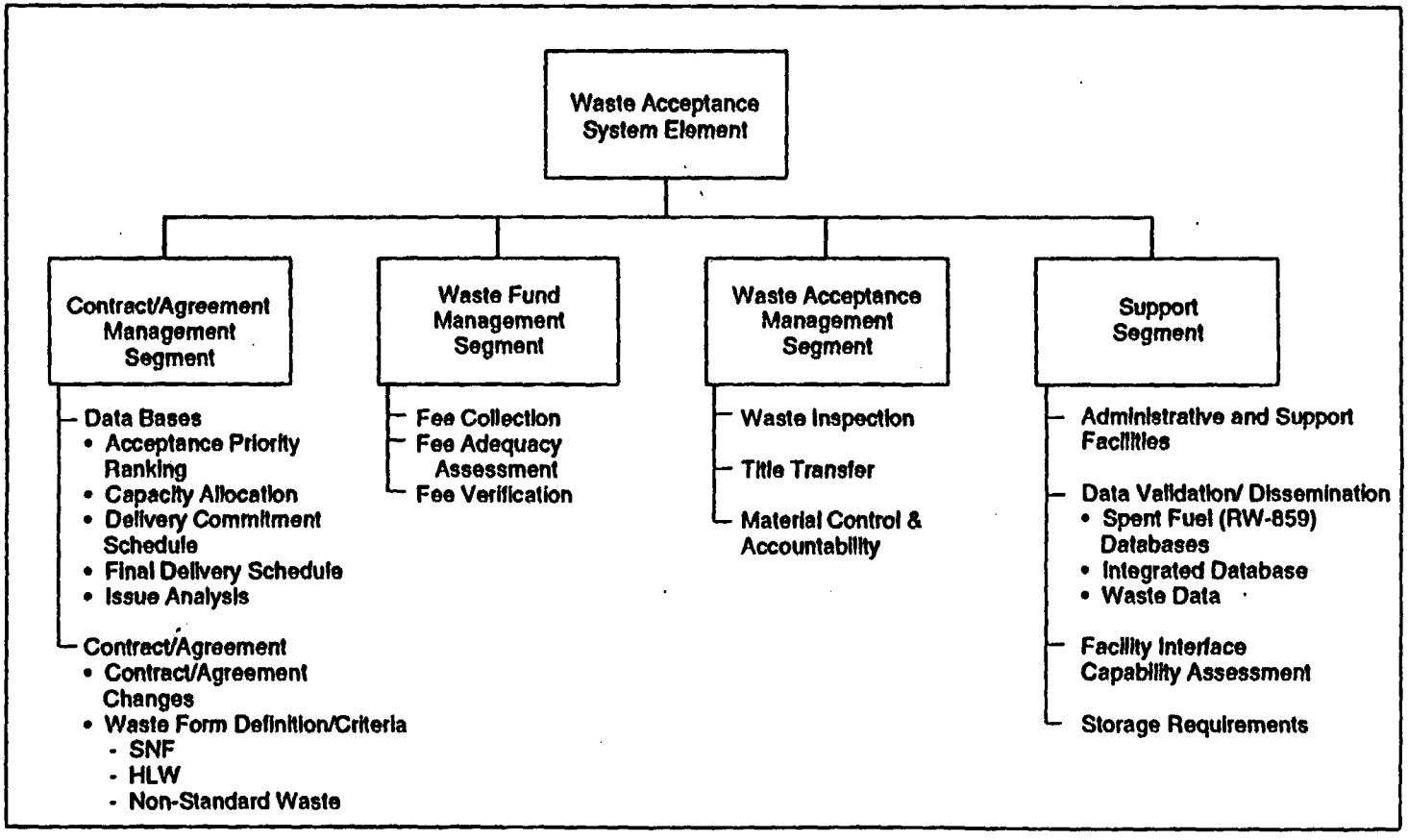

Figure 3-6. WA Architecture

3.1.5 Major Considerations and Assumptions

Generally, the following assumptions are intended to provide guidance to proceed with waste acceptance activities, and are based on informed technical opinion, preliminary study results, and accumulated institutional experience.

A. The standard HLW form accepted into the CRWMS will be vitrified borosilicate glass produced at Savannah River, Hanford, and West Valley. <TBR>

B. WA will accept SNF for storage at the MRS facility and SNF and HLW for disposal at the MGDS.

C. Receipt of SNF at the MGDS will commence in the year 2010.

D. Usage of MPCs for on-site Purchaser storage will commence in the year 1998.

E. Ownership of SNF stored at the Purchaser sites remains with the Purchaser.

F. DOE (OCRWM) accepts title for SNF (f.o.b. carrier) at the time of physical possession.

G. Transfer operations at the Purchaser facility is governed by each Purchaser's operating license. (Utility licenses are governed by 10CFR50, which is not applicable to the CRWMS.) Some activities related to a cask and MPC that take place in the 10CFR50 licensed fuel building are required by the 10CFR71 (for transportation casks) and 10CFR72 (for storage casks) Certificates of Compliance or license. These activities include the closing and sealing of the cask or MPC. Nothing in this requirements document should be construed to countermand any provision of a Purchaser license.

H. The design and certification of the On-Site Transfer and Storage (OSTS) subelement are presumed to be the responsibility of the CRWMS. The procurement and operation are presumed to be the responsibility of the Purchaser. Final determination of licensing, procurement, and operational responsibilities will be addressed in agreements with the Purchasers that are yet to be established.

I. The loaded MPC is expected to remain sealed through the normal life cycle. This does not preclude potential requirements for special inspections or addition of filler at the repository.

J. The primary and normal means of shipping SNF will be in MPC transportation cask subsystems. In the event some Purchasers do not use MPCs, the CRWMS will maintain the capability to transport bare SNF to the MRS facility and the MGDS in (non-MPC) transportation cask subsystems.

K. Table 3-2 lists the design basis SNF characteristics for the MPC. These characteristics are preliminary and are based on the MPC Conceptual Design Report (Ref. 2.5.AC).

Table 3-2. SNF Characteristics for MPCs <TBR>

Characteristics	PWR Assembly	BWR Assembly
Maximum length [1] (inches)	180	180
Maximum cross-section [1] (inches)	9 x 9	6 x 6
Reference burnup [2] (MWd/MTU)	40,000	40,000
Reference initial enrichment [2] (wt% U-235)	3.75	3.75
Minimum decay time (years)	5	5
Minimum decay time for full cask loading (years)	10	10

[1] This dimension includes integral nonfuel components.
[2] The combination of reference burnup, initial enrichment, and decay time provides the minimum thermal and radiological conditions to be met in the design.

3.2 CHARACTERISTICS

3.2.1 Performance Characteristics

The following are requirements on the general waste form characteristics and acceptance schedules. More specific requirements on the waste form characteristics are provided in section 3.7.1.2.

3.2.1.1 SNF and HLW Acceptance

A. (WA) WA shall accept all SNF and HLW defined in section 3.7.1.2. [NWPA Section 111(a)(4)][1]

B. (WA) WA shall not accept in excess of 70,000 MTU or equivalent in the first repository prior to operation of a second repository. [NWPA Section 114(d)]

C. (WA) WA shall not accept SNF or HLW in a manner inconsistent with 10CFR72.44(g). [10CFR72.44(g)]

D. (DOE/RW) In return for established fees, the services to be provided by the CRWMS shall begin, after commencement of facility operations, not later than January 31, 1998, and shall continue until such time as all SNF and/or HLW from the civilian nuclear power reactors specified in Appendix A of 10CFR961 has been disposed of. [NWPA 302(a)(5)] [10CFR961.11 Article II]

3.2.1.2 SNF Receipt

(Purchaser, Producer) Until the SNF or HLW is accepted by WA, the Purchaser/Producer shall provide and pay the costs of interim storage for their respective sites. [NWPA Section 111(a)(5)]

3.2.1.3 HLW Receipt

(WA) WA shall begin accepting HLW for disposal at the MGDS beginning in 2015. [Derived] <TBR>

3.2.1.4 Initial Operations

(WA) WA shall be capable of beginning observation and acceptance functions by January 1998. [A00000000-01717-6700-00001] [CRD 3.2.1C]

[1] Indicates the source document for the basis of the requirement.

3.2.1.5 Receipt Rate

(WA) WA shall be capable of accepting waste as described in Table 3-3. [HLW: DOE/RW-0316P, ORNL/Sub/89-SD841/2] [SNF 1998-2007: DOE/RW-0412] [SNF 2000-2034: A00000000-01717-2200-00001] <TBR>

3.2.2 [Reserved]

3.2.3 Interface Requirements

This section addresses interface requirements between the WA system element and other CRWMS system elements, including Transportation, MRS, and MGDS.

3.2.3.1 [Reserved]

3.2.3.2 Interfaces with Other CRWMS Elements

Interface requirements between WA and the other elements of the CRWMS, which include MRS (both the MRS facility subelement and the OSTS subelement), MGDS, and Transportation are included in this section.

In the following sections, requirements on the system element that interfaces with WA are specified in the corresponding System Requirements Document. Those that relate to MPCs are repeated here for information and symmetry. The phrase "is responsible for" is used to indicate that, although the capability is mandatory, it is provided by another system element and is not a requirement on WA.

3.2.3.2.1 WA-MRS Interface Requirements

This section contains interface requirements between WA and the MRS system elements. The MRS system element consists of the MRS facility and the OSTS.

3.2.3.2.1.1 WA-MRS Facility Interface Requirements

The types of interfaces between these two elements reflect transfer of SNF documentation, reports and communications.

A. (WA) WA shall provide information on the SNF to the MRS to ensure the facility has the capability of receiving, handling, and storing SNF prior to acceptance. [Derived]

B. (WA) WA shall have the capability to accept SNF for storage at the MRS facility at the receipt rate shown in Table 3-3. [SNF 1998-2007: DOE/RW-0412] [SNF 2000-2034: A00000000-01717-2200-00001] <TBR>

Table 3-3. Waste Acceptance Capability (In Metric Tons of Initial Uranium or Equivalent)

Year	SNF		HLW		SNF & HLW
	Rec'd	Total	Rec'd	Total	Total
1998	400[1]	400	0	0	400
1999	600[1]	1,000	0	0	1,000
2000	900	1,900	0	0	1,900
2001	900	2,800	0	0	2,800
2002	900	3,700	0	0	3,700
2003	900	4,600	0	0	4,600
2004	900	5,500	0	0	5,500
2005	900	6,400	0	0	6,400
2006	900	7,300	0	0	7,300
2007	900	8,200	0	0	8,200
2008	900	9,100	0	0	9,100
2009	900	10,000[2]	0	0	10,000
2010	1,400	11,400	0	0	11,400
2011	2,000	13,400	0	0	13,400
2012	2,600	16,000	0	0	16,000
2013	3,000	19,000	0	0	19,000
2014	3,000	22,000	0	0	22,000
2015	3,000	25,000	400	400	25,400
2016	3,000	28,000	400	800	28,800
2017	3,000	31,000	400	1,200	32,200

[1] Waste Acceptance will be operational with capabilities identified in Table 3-3 beginning January 31, 1998. The MRS facility is assumed to begin operation in the year 2000. Any waste accepted prior to that date would be stored at a site other than the MRS facility.

[2] The current legal limit for the MRS facility is 10,000 MTU prior to operation of the MGDS.

Table 3-3. Waste Acceptance Capability (Continued)
(In Metric Tons of Initial Uranium or Equivalent)

Year	SNF		HLW		SNF & HLW
	Rec'd	Total	Rec'd	Total	Total
2018	3,000	34,000	400	1,600	35,600
2019	3,000	37,000	400	2,000	39,000
2020	3,000	40,000	400	2,400	42,400
2021	3,000	43,000	400	2,800	45,800
2022	3,000	46,000	400	3,200	49,200
2023	3,000	49,000	400	3,600	52,600
2024	3,000	52,000	400	4,000	56,000
2025	3,000	55,000	400	4,400	59,400
2026	3,000	58,000	400	4,800	60,800
2027	3,000	61,000	400	5,200	66,200
2028	2,000	63,000	400	5,600	68,600
2029	0	63,000	400	6,000	69,000
2030	0	63,000	400	6,400	69,400
2031	0	63,000	400	6,800	69,800
2032	0	63,000	200	7,000	70,000[1]
2033	0	63,000	0	7,000	70,000
2034	0	63,000	0	7,000	70,000

[1] The current legal limit for the MGDS is 70,000 MTU or equivalent prior to operation of a second repository.

C. (WA) WA shall have the capability of notifying the MRS of the types of SNF being shipped from the Purchaser, and the estimated date of arrival to the MRS facility, on the shipment date. [NWPA 302(a)(5)]

D. (WA) When notified by the MRS of improperly described SNF, WA shall resolve the waste description with the Purchaser. [10CFR961.11 Article VI.B.3(b)]

3.2.3.2.1.2 WA-OSTS Interface Requirements

The type of interface between these two elements reflects the OSTS compatibility with the Purchaser.

A. (WA) WA shall provide Purchaser design information to ensure the OSTS design does not conflict with existing Purchaser licenses. [10CFR72.212(b)(3)] [CRD 3.3.1.B]

OSTS will be responsible for utilizing Purchaser information to ensure the OSTS design does not conflict with Purchaser licenses, to include effluent control requirements and dose limits for normal and off-normal conditions.

3.2.3.2.2 WA-MGDS Interface Requirements

The types of interfaces between these two elements reflect transfer of SNF/HLW documentation, reports and communications.

A. (WA) WA shall assure that MGDS has the capability of receiving, handling, and disposing of SNF and HLW prior to acceptance for shipment to the MGDS. [Derived]

B. (WA) WA shall have the capability to accept SNF beginning in the year 2010 and HLW beginning in the year 2015 for disposal at MGDS at the receipt rate shown in Table 3-3 [1]. [HLW: DOE/RW-0316P, ORNL/Sub/89-SD841/2] [SNF 1998-2007: DOE/RW-0412] [SNF 2000-2034: A00000000-01717-2200-00001] <TBR>

C. (WA) WA shall not accept in excess of 300 canisters of commercial HLW and 13,200 canisters of defense HLW for disposal at the first repository. [Derived] <TBR>

D. (WA) WA shall have the capability of notifying the MGDS of the types of SNF and/or HLW being shipped from the Purchaser/Producer, and the estimated date of arrival to the repository, on the shipment date. [Derived]

---

[1] The acceptance capability at the MGDS may be less than the full acceptance rate shown in Table 3-3, to permit ramp-up during the first few years of operation as specified in the MGDS-RD (Ref. 2.5Y).

E. (WA) When notified by the MGDS of improperly described SNF and/or HLW, WA shall resolve the waste description with the Purchaser/Producer. [10CFR961.11 Article VI.B.3(b)]

3.2.3.2.3 WA-Transportation Interface Requirements

The types of interfaces between these two elements reflect transfer of both loaded and unloaded transportation cask subsystems and the documentation, reports and communications regarding loaded and unloaded transportation cask subsystems.

A. (WA) In support of the following requirements, WA shall arrange for transportation cask subsystem(s) (which includes MPCs) and necessary Transportation System services to move the SNF and/or HLW from the Purchaser/Producer site to the CRWMS facility. [10CFR961.11 Article IV.B.2]

(1) Purchasers shall be provided with a truck or rail cask for delivery of SNF (from-reactor) to the MRS facility or MGDS. [DOE/RW-0005]

(2) Producers shall be provided with a rail cask for delivery of defense HLW (from-Savannah River Site and from-Hanford) to the MGDS. [Derived]

(3) Producers shall be provided with a rail cask for delivery of commercial HLW (from-West Valley Demonstration Project) to the MGDS. [Derived] <TBR>

B. (WA) WA shall have the capability to accept SNF and HLW for transport at the receipt rate shown in Table 3-3. [HLW: DOE/RW-0316P, ORNL/Sub/89-SD841/2] [SNF 1998-2007: DOE/RW-0412] [SNF 2000-2034: A00000000-01717-2200-00001] <TBR>

C. (WA) WA shall work with Transportation to establish cleanliness requirements for the interior of the transportation cask for the beginning of each shipping campaign with each Purchaser/Producer. [Derived]

D. (WA) WA shall identify and document the site interface capabilities for each Purchaser/Producer. [Derived]

E. (WA) WA shall verify that cask systems are provided with an appropriate feature, which is not readily breakable, and which, while intact, would be evidence that the cask has not been opened by unauthorized persons. [10CFR71.43(b)]

F. (WA) WA shall ensure that pertinent information on transportation cask subsystems have been provided to the Purchaser/Producer prior to each shipping campaign including, but not limited to, the following:

(1) Written procedures for cask and MPC handling and loading, including specifications on Purchaser/Producer-furnished canisters for containment of failed fuel.

(2) Training for Purchaser/Producer personnel in cask and MPC handling and loading, as may be necessary.

(3) Technical information and sufficient documentation on the equipment supplied by CRWMS.

[10CFR961.11 Article IV.B.2]

3.2.3.2.4 Segment Interface Summary

A. (WA) WA shall address requirements for WA segment interfaces with Transportation identified in Table 3-4. Where an interface exists, the block in the table contains an "X" indicating that there is a functional interface for WA to address between the segments involving Function 1.2 Transport Waste. An entry of "NONE" in the table indicates that no interface has been identified between the segments. [DOE Order 4700.1 Ch III.B.2.c(2)(c)] [Derived by CRD 3.2.3.2.B]

Transportation is responsible for ensuring that the Transportation Segment interfaces to Function 1.1 Accept Waste are addressed.

Table 3-4 WA-Transportation Interfaces <TBR>

Transportation→ SEGMENTS WA↓	Transportation Cask Subsystems	Service and Maintenance Support	Field Operations	Planning and Control
Contract/ Agreement Management	X	NONE	X	X
Waste Fund Management	NONE	NONE	NONE	NONE
Waste Acceptance Management	X	X	X	X
Support Segment	NONE	X	X	X

B. (WA) WA shall address requirements for WA segment interfaces with the OSTS identified in Table 3-5. Where an interface exists, the block in the table contains an "X" indicating that there is a functional interface for WA to address between the segments involving Function 1.3.2 Perform Transfer and Storage System Operations. An entry of "NONE" in the table indicates that no interface has been identified between the segments. [DOE Order 4700.1 Ch III.B.2.c(2)(c)] [Derived by CRD 3.2.3.2.B]

OSTS is responsible for ensuring that the OSTS subelement interfaces to Function 1.1 Accept Waste are addressed.

Table 3-5 WA-OSTS Interfaces <TBR>

WA→ SEGMENTS OSTS↓	Contract/ Agreement Management	Waste Fund Management	Waste Acceptance Management	Support Segment
On-Site Transfer	X	NONE	X	NONE
On-Site Storage	X	NONE	X	NONE
Bare SNF Transfer	X	NONE	X	NONE

3.2.4 [Reserved]

3.2.5 [Reserved]

3.2.6 [Reserved]

3.2.7 [Reserved]

3.2.8 [Reserved]

3.2.9 [Reserved]

3.3 DESIGN AND CONSTRUCTION

Requirements regarding design and construction of physical facilities are not applicable to WA since no facility has been allocated to it. If a facility is allocated to WA, the appropriate requirements in the CRWMS Requirements Document are applicable.

3.3.1 [Reserved]

3.3.2 [Reserved]

3.3.3 [Reserved]

3.3.4 [Reserved]

3.3.5 [Reserved]

3.3.6 Safety

(WA) In compliance with occupational safety and health standards promulgated under 29USC651 et seq., WA work places shall be free from recognized hazards that are causing or likely to cause death or serious physical harm to employees. [29USC651 et seq., (654 (a) - (b))]

3.3.7 Human Factors Engineering

(WA) Design of computer software and firmware that provides an interface between users and computers should comply with or be comparable to the guidelines and requirements identified in Guidelines for Designing User Interface Software MTR 10090 for data entry and user inputs, data display, sequence control, user guidance and prompts, data transmission, and data protection. [CRD]

3.3.8 Methods and Controls

3.3.8.1 Material Management

(WA) Measures shall be established to ensure that purchased material, equipment, and services conform to procurement documents. [CRD]

3.3.8.2 Inventory Control

3.3.8.2.1 Radioactive Material Inventory

A. (WA) WA shall establish, maintain, and follow written material control and accounting procedures that enable the CRWMS to account for material in transit, storage, and disposal. [CRD]

B. (WA) WA shall retain copies of current inventory records and current material control and accounting procedures until the NRC terminates the last license held by the CRWMS. [CRD]

C. (WA) Inventory accounting and control systems for acceptance of SNF and HLW shall comply with the requirements of 10CFR75, in compliance with the US/IAEA agreement. SNF may be bare SNF or SNF loaded in MPCs. [10CFR75.1] [CRD 3.3.8.2C]

3.3.9 Government Furnished Property

A. (WA) WA Design Requirements Document shall identify, as appropriate, any property to be furnished by the U.S. Government. [CRD]

B. (WA) Requirements pertaining to the receipt, maintenance, operation and disposal of Government furnished property shall be specified in WA Design Requirements Document, as appropriate. [CRD]

3.3.10 Computer Resources

A. (WA) Computer resources are to be addressed in the WA Design Requirements Document, as appropriate. [CRD]

B. (WA) The design of WA computer systems shall provide the intercompatability of CRWMS computer resources, including hardware and software. The design goal shall be to allow for common use databases and information by all CRWMS elements. [CRD]

3.3.11 Environmental Protection Requirements

See section 3.7.1.2.1.2.12 and 3.7.3.2.1E for requirement on hazardous waste determination.

3.4 DOCUMENTATION

3.4.1 [Reserved]

3.4.2 [Reserved]

3.4.3 [Reserved]

3.4.4 Test Plans and Procedures

(WA, Purchaser, Producer) Through test and evaluation, conformance of the system element's requirements shall be demonstrated as required in the verification matrix in Table 4-1. [CRD]

3.4.5 Quality Assurance Documentation

(WA) Quality Assurance documents shall be prepared, maintained, and stored in accordance with the requirements specified in OCRWM QARD or equivalent OCRWM approved QA program. [CRD]

3.4.6 [Reserved]

3.4.7 Computer Documentation

(WA) Quality affecting analytical and computational models and software user documentation developed for WA shall be prepared in accordance with the OCRWM QARD. [DOE/RW-0333P]

3.4.8 Records Management

A. (WA) WA shall maintain sufficient records to furnish evidence of activities affecting quality. [DOE/RW-0333P][DOE/RW-0194P Sections 6.1, 6.3, and 6.4]

B. (WA) Records shall be identifiable, traceable to associated items and activities, and retrievable. [DOE/RW-0333P]

3.5 [Reserved]

3.6 PERSONNEL AND TRAINING

3.6.1 [Reserved]

3.6.2 Training

Training may be accomplished through a combination of formal structured programs and on-the-job training. Training requirements include both the training of personnel initially assigned to WA and the training of replacement personnel throughout the system life cycle as required. Training will address both operator and maintenance tasks.

3.6.2.1 General Requirements

(WA) A training requirements document for WA shall be provided to identify requirements of operator and maintenance training for facilities, hardware, and software procured or constructed for the CRWMS. The document shall address the following subjects:

A. The contractor and government responsibility for training shall be defined. This will include the concept of how training will be accomplished (e.g., school, contractor training).

B. Equipment required for training purposes shall be identified.

C. Training devices to be developed, characteristics of the training devices, and training and skills to be developed through the use of training devices shall be identified.

D. Training time and locations available for training shall be identified.

E. Source material and training aids to support the specified training shall be identified.

[CRD]

3.7 SEGMENT REQUIREMENTS

3.7.1 Contract/Agreement Management Segment

3.7.1.1 Contract/Agreement Management Segment Description

This segment provides the contract/agreement between DOE and each Purchaser/Producer who generates or holds title to HLW or SNF, and the databases to track the planning and scheduling process for acceptance of the waste into the CRWMS.

This segment includes the following:

A. **Contract/Agreement.** WA supports DOE entering into contract/agreement with Purchasers/Producers. This includes establishing terms and conditions for waste acceptance and related services, identifying responsibilities of each party, defining the waste form (SNF, HLW, and nonstandard waste) and requirements on its acceptability (including SNF loaded in MPCs), and any changes or maintenance to the contracts/agreements. Purchasers/Producers must execute a contract or a suitable intra-agency agreement with DOE reflecting the intent of the contract as specified in 10CFR961.

B. **Databases.** WA tracks the information gathered to support the planning and scheduling process. The information that must be maintained includes (but is not limited to) waste inventory characteristics, Acceptance Priority Ranking (APR), Annual Capacity Report (ACR), Delivery Commitment Schedules (DCS), Final Delivery Schedules (FDS), and issue analysis.

3.7.1.1.1 Contract/Agreement Management Segment Functions

This segment shall be capable of performing all functions assigned to it in Table B-1 in Appendix B. These functions are:

A. Accept Waste (1.1)
B. Define Waste Acceptance Criteria (1.1.1)
C. Establish Contracts/Agreements (1.1.2)
D. Plan for Waste Acceptance (1.1.3)
E. Allocate Waste System Capacity (1.1.3.1)
F. Collect Waste Data (1.1.3.1.1)
G. Rank/Order Waste (1.1.3.1.2)
H. Allocate Annual Capacity to Purchasers/Producers (1.1.3.1.3)

I. Identify Waste Location/Characteristics (1.1.3.2)
J. Evaluate Delivery Commitment Schedule (DCS) (1.1.3.2.1)
K. Evaluate DCS Exchange Requests (1.1.3.2.2)
L. Evaluate Request for Nonstandard Waste Delivery (1.1.3.2.3)
M. Evaluate Final Delivery Schedule (FDS) (1.1.3.2.4)
N. Define Site Interface Capabilities (1.1.3.3)
O. Provide Fee Collection (1.1.7)

Descriptions for these functions are included in Appendix A. [Derived by CRD 3.7.1.1.1]

3.7.1.1.2 Contract/Agreement Management Segment Interfaces

The lower level Design Requirements Document identifies, describes, and specifies requirements for interfaces between segments.

3.7.1.2 Contract/Agreement Management Segment Requirements

3.7.1.2.1 Waste Form Criteria

A. (WA, Purchaser, Producer) All radioactive waste (both SNF and HLW) accepted into the CRWMS for disposal at the MGDS shall be designed to meet the following criteria. Consistent with established agreements, DOE may be responsible for ensuring that certain waste types meet this requirement.

(1) (Purchaser, Producer) Radioactive waste shall be in solid form.

(2) (Purchaser, Producer) Particulate waste forms shall be consolidated (for example, by incorporation into an encapsulating matrix) to limit the availability and generation of particulates.

(3) (Purchaser, Producer) Combustible radioactive wastes shall be reduced to noncombustible form unless it can be demonstrated that a fire involving the waste packages containing combustibles will not adversely affect other waste packages, any structures, systems, and components important to safety, or the repository's ability for waste isolation.

[10CFR60.135(c)]

B. (WA, Purchaser, Producer) The waste form shall not contribute to free liquids in the waste packages to an amount that could compromise the ability of the waste package to achieve the performance objectives related to containment of the waste form or result in spillage and spread of contamination in the event of waste package perforation during the period through permanent closure. [10CFR60.135(b)(2)]

C. (WA, Purchaser, Producer) The waste form shall not contain explosive, pyrophoric, or chemically reactive materials in an amount that could compromise the repository's ability for waste isolation or the repository's ability to satisfy the performance objectives. [10CFR60.135(b)(1)]

D. (WA, Purchaser, Producer) If the waste form does not meet the criteria specified in parts A, B, and C, then the waste form shall not be accepted into the CRWMS. [Derived]

3.7.1.2.1.1 SNF Specifications

(WA) WA shall accept standard, failed, and nonstandard SNF of domestic origin described in sections 3.7.1.2.1.1.1, 3.7.1.2.1.1.2, and 3.7.1.2.1.1.3, respectively. [10CFR961.11 Article IV.B.1]

3.7.1.2.1.1.1 SNF Standard Form

(Purchaser) Standard SNF shall meet the criteria specified in 10CFR961.11 Appendix E.B.1 through E.B.5.[1] [10CFR961.11 Appendix E.B.1 through E.B.5]

3.7.1.2.1.1.2 SNF Failed Form

(Purchaser) Failed SNF shall meet the criteria specified in 10CFR961.11 Appendix E.B.6. [10CFR961.11 Appendix E.B.6]

3.7.1.2.1.1.3 SNF Nonstandard Form

(Purchaser) The nonstandard SNF shall be any SNF that does not fall within the standard or failed SNF description in sections 3.7.1.2.1.1.1 and 3.7.1.2.1.1.2, respectively. [10CFR961.11 Appendix E.A.1(b)]

The procedures for acceptance of nonstandard SNF are described in section 3.7.1.2.8A.

3.7.1.2.1.1.4 SNF Data

A. (Purchaser) Beginning October 1, 1983, the Purchasers shall provide to DOE, on an annual basis, one of the following:

(1) Information on actual discharges, and projected discharges for the next 10 years in the form and content set forth in 10CFR961 Appendix B [10CFR961.11 Article IV.A.1(a)] or

[1] SNF will be quantified in a subsequent revision of the WA-SRD.

(2) Information on the Nuclear Fuel Data Form RW-859 for the next 5 cycles. [Derived]

The information to be provided should include estimates and projections and are not firm commitments with respect to discharges or deliveries. [10CFR961.11 Article IV.A.1(a)]

B. (Purchaser) Purchasers shall provide to DOE a detailed description of the SNF to be delivered, as specified in 10CFR961.11 Appendix F and shall promptly advise DOE of any changes in said SNF as soon as they become known. [10CFR961.11 Article VI.A.2(a)]

3.7.1.2.1.1.5 Multi-Purpose Canisters Containing SNF

A. (Purchaser) The Purchaser shall load the MPC with SNF in a configuration that complies with written procedures and in compliance with the transportation cask and storage mode Certificates of Compliance. Standard, failed, and nonstandard SNF may be loaded in MPCs; however, acceptance of failed and nonstandard SNF is subject to the procedure described in section 3.7.1.2.8.A. [10CFR71.87(f)] [10CFR72.212(a)] [10CFR961.11 Article VI.A] [10CFR961.11 Appendix E] [CRD 3.2.1.1C]

B. (Purchaser) The Purchaser shall ensure the MPC and its contents are protected from damage or degradation that leads to gross SNF cladding ruptures during storage at the Purchaser site. [10CFR72.122(h)(1)] [10CFR72.212(b)(2)] [Derived by CRD 3.2.1.1H]

C. (Purchaser) At the time of transport off-site, the Purchaser shall ensure that the MPC is capable of fitting into a right-circular, cylindrical cavity <TBD> diameter and <TBD> length. [Derived by CRD 3.2.1.1.H] <TBR>

D. (Purchaser) The Purchaser shall use an inert gas as the cover gas when filling the MPC. [10CFR60.135(a)(2)]

E. (Purchaser) The Purchaser shall ensure that after closure, the MPC does not contain:

(1) Free gases other than air, cover, and radiogenic gases

(2) Detectable amounts of organic material. [10CFR60.135(a)(2)]

3.7.1.2.1.2 HLW Specifications

(WA) WA shall accept standard and nonstandard HLW described in sections 3.7.1.2.1.2.1 and 3.7.1.2.1.2.3, respectively. [Derived]

Detailed design requirements are to be addressed in the WA Design Requirements Document.

3.7.1.2.1.2.1 HLW Standard Form

A. (Producer) The standard canistered HLW form[1] shall be borosilicate glass sealed inside an austenitic stainless steel canister(s) with a concentric neck and lifting flange. [Derived]

B. (Producer) The standard canistered HLW form shall meet the following criteria:

(1) (Producer) Total length shall be 3.000 meters (+0.005, -0.020 m).[2] [Derived]

(2) (Producer) Diameter shall be 61.0 centimeters (+1.5, -1.0 cm).[2] [Derived]

(3) (Producer) Weight shall not exceed 2500 kilograms. [Derived]

(4) (Producer) Fill height shall be equivalent to at least 80% of the volume of the empty canister. [Derived]

(5) (Producer) Total heat generation rate shall not exceed 1500 watts per canister at the year of shipment. [Derived]

(6) (Producer) Temperature shall not have exceeded 400°C during storage to ensure the glass transition temperature has not been exceeded. [Derived]

(7) (Producer) Inert cover gas leak rate of the outermost closure shall be less than $(10)^{-4}$ atm-cc/sec. [Derived]

(8) (Producer) Canister shall be labelled with unique alphanumeric identifier as described in section 3.7.1.2.1.2.15. [10CFR60.135(b)(4)]

3.7.1.2.1.2.2 HLW Nonconforming Form

(Producer) The nonconforming canistered HLW form shall be any HLW that does not conform with the HLW characteristics in sections 3.7.1.2.1.2.1 and 3.7.1.2.1.2.4 through 3.7.1.2.1.2.18. [Derived]

The procedures for acceptance of nonconforming canistered HLW are described in sections 3.7.1.2.8 and 3.9.

---

[1] Other standard HLW forms will be defined in subsequent revisions of the WA-SRD.

[2] The minimum dimension may be measured prior to filling.

3.7.1.2.1.2.3 HLW Nonstandard Form

(Producer) The nonstandard canistered HLW form shall be any HLW with nonconforming conditions that have been reviewed and deemed acceptable into the CRWMS. Nonstandard canistered HLW may also be in a condition which requires special handling. [Derived]

The procedure for acceptance of nonstandard HLW is described in section 3.7.1.2.8A.

3.7.1.2.1.2.4 Criticality Safety for HLW

(Producer) The Producer shall design a waste form to ensure that a nuclear criticality accident is not possible unless at least two unlikely, independent, and concurrent or sequential changes have occurred in the conditions essential to nuclear criticality safety. The waste form shall be designed for criticality safety under normal and accident conditions. The calculated effective multiplication factor (k_{eff}) shall be sufficiently below unity to show at least a 5% margin, after allowance for the bias in the method of calculation, the uncertainty in the experiments used to validate the method of calculation. [10CFR60.131(b)(7)][10CFR71.55]

3.7.1.2.1.2.5 Waste Form - Material Compatibility

(Producer) The contents of the canistered waste form shall not lead to internal corrosion of the canister such that there will be an adverse effect on normal handling, during storage, and on abnormal occurrence such as a canister drop accident after exposure to temperatures up to the glass transition temperature. [Derived]

3.7.1.2.1.2.6 Chemical Composition

A. (Producer) The Producer shall report to DOE/OCRWM the chemical composition and crystalline phase projections for the waste form. [Derived]

B. (Producer) The Producer shall report to DOE/OCRWM the oxide composition of the waste form for the oxides of elements present in concentrations greater than 0.5% by weight and the estimate of the error of the composition. [Derived]

3.7.1.2.1.2.7 Canister Material and Fabrication Reporting

(Producer) The Producer shall report to DOE/OCRWM the ASTM alloy specification and composition of the fill canister material, secondary canister material, canister label material, and any filler material used for welding, and the method of fabrication of the fill canister and any secondary canister. [Derived]

3.7.1.2.1.2.8 Radionuclide Inventory

(Producer) The Producer shall report to DOE/OCRWM the estimated total and individual canister inventory of radionuclides (in Curies) that have half-lives longer than 10 years and that are or will be present in concentrations greater than 0.05% of the total radioactive inventory. The estimates shall be indexed to the year 2015. [Derived]

3.7.1.2.1.2.9 Canister After Closure

(Producer) After closure, the canistered waste form shall not contain:

A. Free gas other than air, cover, and radiogenic gases with an immediate internal gas pressure not to exceed 150 kPa (22 psia) at 25°C. Cover gases shall be helium, argon, or other inert gases. [Derived]

B. Detectable amounts of organic materials. [Derived]

3.7.1.2.1.2.10 Removable Radioactive Contamination on Canister

A. (Producer) The levels of removable radioactive contamination of all external surfaces of each canistered waste form shall not exceed 220 dpm/100 cm^2 for alpha radiation and 2200 dpm/100 cm^2 for beta and gamma radiation. [Derived]

B. (Producer) The Producer shall inspect the canistered waste form and remove visible waste glass from the exterior surface of the canister prior to shipment. [Derived]

C. (Producer) The Producer shall report to DOE/OCRWM an estimate of the amount of canister material (particularly wall thickness) removed during decontamination of the canister surface. [Derived]

3.7.1.2.1.2.11 HLW Phase Stability and Integrity

A. (Producer) The Producer shall ensure the phase structure and composition of the canistered waste form are not degraded after initial cooldown by maintaining it below 400°C to ensure the glass transition temperature is not exceeded. [Derived]

B. (Producer) The Producer shall provide the Time Temperature Transformation diagrams and data for the canistered waste form. [Derived]

3.7.1.2.1.2.12 Hazardous Waste Determination

(WA, Producer) WA shall require the Producer to determine if the HLW is hazardous as follows:

A. (Producer) The Producer shall determine, quantify, and report to DOE/OCRWM the presence of any hazardous waste listed in 40CFR261.31 through 40CFR261.33, in the waste or in any feed stream proposed for storage or disposal. The listed waste must be quantified in the WQR, or their absence must be certified in the WQR. [Derived]

B. (Producer) If no "listed hazardous wastes" are present in the waste or in any feed stream, the Producer shall perform the "Toxicity Characteristic Leaching Procedure" (TCLP) as described in 55 *Federal Register* 26986, 6/29/90, and other RCRA characteristic test(s) described in 40CFR261.20 through 261.24 as appropriate, using samples from production runs or prototypical specimens. Any modifications must have prior DOE/OCRWM approval. The method to be used must be described in the WCP and results documented in the WQR. [Derived]

C. (Producer) Based on the results of A and B above, the Producer shall certify in the WQR whether or not the waste is hazardous. [Derived]

D. (Producer) For hazardous wastes, the Producer shall prepare "Hazardous Waste Manifest" logs as required by 40CFR262. These logs must be included in the Production Records and must accompany waste during shipment. [Derived]

3.7.1.2.1.2.13 Consistency Test

A. (Producer) The Producer shall demonstrate control of waste form production by comparing (either directly or indirectly) melter batch production samples to the Environmental Assessment (EA) benchmark glass using the Product Consistency Test (PCT) or equivalent. [Derived] <TBR>

B. (Producer) For acceptance, the concentrations of lithium, sodium, and boron in the leachate, after normalization for the concentrations in the glass, shall be less than those of the benchmark glass. [Derived] <TBR>

3.7.1.2.1.2.14 Canister Impact Characteristics

(Producer) The canistered HLW shall be capable of withstanding a drop of 7 meters onto a flat, essentially unyielding surface without breaching or dispersing radionuclides. The test results shall include information on the measured canister leak rates and canister deformation after the drop test. [Derived] <TBR>

3.7.1.2.1.2.15 Canister Label Requirements

(Producer) Each canistered waste form label shall meet the following criteria:

A. The label must have a unique alphanumeric identifier and this identifier must appear on all documentation pertinent to that particular canistered waste form.

B. The label must not impair the integrity of the canister.

C. The label must be a material compatible with the canister material.

D. The label must be visible from the top and side of the canister.

E. The label must not cause the dimensional limits to be exceeded.

F. The label must be an integral part of the canister to assist in remaining legible at least to the end of the period of retrievability at the MGDS.

[Derived]

3.7.1.2.1.2.16 Canister Handling Features

(Producer) The following requirements pertain to the grapple used in the handling of the standard HLW canister that includes a concentric neck and lifting flange. (see section 3.7.1.2.1.2.1 for dimensions)

A. (Producer) The Producer shall provide a grapple design suitable for use in loading or unloading a transportation cask with a standard HLW canister. [Derived]

B. (Producer) The grapple, when attached to the hoist and engaged with the flange, shall be capable of moving the canistered waste form in the vertical direction. [Derived]

C. (Producer) The grapple shall be capable of being remotely engaged with and remotely disengaged from the HLW canister flange. [Derived]

D. (Producer) The grapple shall be capable of being engaged or disengaged while remaining within the projected diameter of the waste form canister. [Derived]

E. (Producer) The grapple shall include features that prevent inadvertent release of a suspended canistered waste form. [Derived]

3.7.1.2.1.2.17 Dose Rate at Shipment

(Producer) The canistered waste form shall not exceed a maximum surface gamma dose rate of 10^5 rem/hr and a maximum neutron dose rate of 10 rem/hr, at the year of shipment to the MGDS. [Derived]

3.7.1.2.1.2.18 HLW Condition at Delivery

(Producer) At time of delivery, the HLW shall stand upright without support on a flat horizontal surface and properly fit into a right-circular, cylindrical cavity (64 cm diameter and 3.01 m length). [Derived]

3.7.1.2.1.2.19 Records

(WA, Producer) WA shall require the Producer to submit documentation to DOE/OCRWM to demonstrate compliance of the HLW form with this WA-SRD in accordance with the requirements of OCRWM QARD section 17. DOE-EM, as the cognizant organization within DOE for HLW form production, shall produce waste form production specifications, which describe the form and content of this document. As a minimum, this documentation will include a Waste Form Compliance Plan, a Waste Form Qualification Record, Production Records, and Storage and Shipping Records. [DOE/RW-0333P]

3.7.1.2.1.2.19.1 Waste Form Compliance Plan (WCP)

(Producer) The WCP shall describe the Producer plan for demonstrating compliance with each requirement in the WA-SRD, including tests, analyses, and process controls to be performed by the Producer. The WCP will also identify records that will be provided as evidence of compliance. [DOE/RW-0333P]

3.7.1.2.1.2.19.2 Waste Form Qualification Report (WQR)

(Producer) The WQR shall compile the results from waste form testing and analysis to demonstrate the ability of the Producer to comply with the WA-SRD. [DOE/RW-0333P]

3.7.1.2.1.2.19.3 Production Record

(Producer) The Production Records shall describe the actual canistered waste form. [DOE/RW-0333P]

3.7.1.2.1.2.19.4 Storage and Shipping Record

(Producer) The Storage and Shipping Record shall describe the physical attributes of each canistered waste form and identify any unexpected events, such as thermal excursions, which have occurred during storage. [DOE/RW-0333P]

3.7.1.2.1.2.20 HLW Annual Report

(Producer) Producer shall provide annual reports of waste generation and projections of quantities of vitrified HLW requiring disposal. [Derived]

3.7.1.2.2 Contract/Agreement

Note: For the purposes of this section (3.7.1.2.2), NYSERDA is considered a "Purchaser" for contract/agreement requirements.

A. (DOE/RW) The DOE shall enter into contracts/agreements with any person who generates or holds title to high-level radioactive waste, or spent nuclear fuel, of domestic origin for the acceptance of title. [NWPA Section 302 (a)(1)]

B. (DOE/RW, WA) The DOE (WA) shall accept title to all SNF and/or HLW, of domestic origin for which fees have been paid, generated by the civilian nuclear power reactor(s) specified in Appendix A of 10CFR961. [10CFR961.11 Article IV.B.1] [DOE/RW-0328P]

C. (WA) Except as provided in the contracts/agreements, WA shall accept only SNF and/or HLW that meets the General Specification and classifications requirements for waste as set forth in Appendix E of 10CFR961. [10CFR961.11 Article V.A] [10CFR961.11 Article VI.A.1]

D. (DOE/RW, Purchaser) After June 30, 1983, the contract with DOE/OCRWM shall be signed by the date on which the Purchaser commences generation of, or takes title to, such SNF or HLW. [10CFR961.2]

E. (DOE/RW, Purchaser, Producer) Federal agencies or departments requiring disposal service in CRWMS shall execute a suitable interagency agreement reflecting the terms and conditions specified in 10CRF961.11. Fees to be paid by Federal agencies will be equivalent to the fees that would be paid under the 10CFR961 contract. [10CFR961.5]

F. (DOE/RW, WA, Purchaser) The terms of the contract shall begin at the date of execution until such time DOE has accepted title to all SNF and HLW. [10CFR961.11 Article III]

G. (WA, Purchaser) No SNF shall be disposed of in the CRWMS repository unless the Purchaser has entered into a contract with DOE/OCRWM as specified in the NWPA Sec. 302(b)(2). [NWPA Section 302(b)(2)]

H. (DOE/RW, WA, Producer) The DOE/RW shall accept title to defense HLW. [Presidential Memo 1985]

3.7.1.2.3 Acceptance Priority Ranking

(DOE/RW) DOE shall issue the acceptance priority ranking for SNF and/or HLW as specified in 10CFR961.11 Articles IV.B.5 and VI.B.1. [10CFR961.11 Article IV.B.5][10CFR961.11 Article VI.B.1]

3.7.1.2.4 Annual Capacity Report

(DOE/RW) DOE shall issue an annual capacity report for planning purposes for SNF as specified in 10CFR961.11 Article IV.B.5. [10CFR961.11 Article IV.B.5]

3.7.1.2.5 Emergency Deliveries

(DOE/RW) Emergency deliveries of SNF and/or HLW may be accepted by DOE before the date provided in the delivery commitment schedule upon prior written approval by DOE. [10CFR961.11 Article V.D]

3.7.1.2.6 Delivery Commitment Schedules

A. (Purchaser) Beginning January 1, 1992, the Purchasers shall submit to DOE the delivery commitment schedules (DCS) for all SNF the Purchasers wish to deliver to DOE beginning 63 months thereafter. The DCS should be in the format set forth in Appendix C of 10CFR961 as provided in OMB approved form number 1901-0260. [10CFR961.11 Article V.B.1]

B. (DOE/RW) DOE shall approve or disapprove of the Purchaser DCS within 3 months after receipt, and must notify the Purchaser in writing of the reasons for disapproval. DOE must request the Purchaser to submit a revised DCS within 30 days after receipt of DOE's disapproval. [10CFR961.11 Article V.B.1]

C. (DOE/RW) DOE shall approve or disapprove the Purchaser revised DCS within 60 days after receipt. In the event of disapproval, DOE must advise the Purchaser in writing of the reasons and proposed schedules, and if the reasons and proposed schedules are not acceptable to the Purchaser, the parties must promptly try to negotiate mutually acceptable schedule(s). [10CFR961.11 Article V.B.2]

D. (DOE/RW, Purchaser) The Purchaser shall have the right to adjust the quantities of SNF and/or HLW plus or minus 20%, and the delivery schedule up to 2 months, until the submission of the final delivery schedule. [10CFR961.11 Article V.B.2]

E. (DOE/RW) If the Purchaser fails to provide the annual forecast discussed in section 3.7.1.2.1.1.4A, DOE may, at its sole discretion, require a rescheduling of any DCS then in effect. [10CFR961.11 Article IV.A.1(c)]

3.7.1.2.7 Exchange Requests

A. (Purchaser) Not less than 6 months prior to the delivery date specified in the Purchaser approved DCS, the Purchaser shall be allowed to submit to DOE an exchange request as specified in 10CFR961.11 Article V.E. [10CFR961.11 Article V.E]

B. (DOE/RW) DOE shall approve or disapprove the proposed exchange request within 30 days after receipt. In the event of disapproval, DOE must advise the Purchaser in writing of the reasons. [10CFR961.11 Article V.E]

3.7.1.2.8 Request for Nonstandard or Nonconforming Waste Delivery

A. (DOE/RW, Purchaser, Producer) Purchaser/Producer shall obtain delivery and procedure confirmation from DOE prior to delivery of other-than-standard waste (failed SNF and nonstandard SNF/HLW). DOE shall advise Purchaser/Producer within 60 days after receipt of confirmation request as to the technical feasibility of accepting of the other-than-standard waste on the currently agreed to schedule, and any schedule adjustment for such services. [10CFR961.11 Article VI.A.2(b)]

B. (Producer) Producer shall submit action plan for correction or disposition of nonconforming waste for verification and documented approval. The action plan must adequately identify and describe the nonconformance and any action to change or correct the existing nonconformance. The action plan must be signed by authorized personnel/organization. [DOE/RW-0333P]

3.7.1.2.9 Final Delivery Schedules

A. (Purchaser) The Purchaser shall submit to DOE, not less than 12 months prior to delivery, final delivery schedule(s) (FDS) as specified in 10CFR961.11 Appendix D. [10CFR961.11 Article V.C]

B. (DOE/RW, Purchaser) DOE shall approve or disapprove a FDS within 45 days after receipt. In the event of disapproval, DOE must advise the Purchaser in writing of the reasons, and request a revised schedule. The Purchaser shall submit the revised schedule within 30 days after receipt of DOE's notice of disapproval. [10CFR961.11 Article V.C]

C. (DOE/RW) DOE shall approve or disapprove the revised FDS submitted by the Purchaser within 60 days after receipt. If DOE disapproves the revised schedule, the reasons for disapproval must be provided in writing to the Purchaser, along with DOE's proposed schedule. If these are not acceptable to the Purchaser, the parties must promptly seek to negotiate mutually acceptable schedules. [10CFR961.11 Article V.C]

3.7.1.2.10 Final Description of Waste

(Purchaser, Producer) Except as otherwise agreed to by DOE, the Purchaser/Producer shall describe in writing the material in each shipping lot 60 days prior to the scheduled DOE transportation of that shipping lot. [10CFR961.11 Article IV.A.2(b)]

3.7.1.2.11 Waste Selection

(WA) WA shall work with the Purchaser to select SNF based on a Purchaser-specific SNF storage and acceptance plan that delivers waste of CRWMS-preferred characteristics based on trade-offs between Transportation, MRS, and MGDS preferences for waste stream and selection sequences. [10CFR961.11 Article V.A] [CRD 3.7.1.2.M]

3.7.2 Waste Fund Management Segment

3.7.2.1 Waste Fund Management Segment Description

This segment consists of the analysis and management of the Nuclear Waste Fund for CRWMS. It includes the databases for tracking collection of fees, determining the adequacy of the fee paid by Purchasers and Producers and any needed financial risk assessment.

3.7.2.1.1 Waste Fund Management Segment Functions

This segment shall be capable of performing all functions assigned to it in Table B-1 in Appendix B. These functions are:

A. Accept Waste (1.1)
B. Provide Fee Collection (1.1.7)

Descriptions for these functions are included in Appendix A. [Derived by CRD 3.7.1.1.1]

3.7.2.1.2 Waste Fund Management Segment Interfaces

The lower level Design Requirements Document identifies, describes, and specifies requirements for interfaces between segments.

3.7.2.2 Waste Fund Management Segment Requirements

A. (DOE/RW) Procedures for the collection and payment of fees shall be established by the Secretary of Energy as specified in the NWPA Section 302. [NWPA Section 302(a)(4)]

B. (DOE/RW) The Secretary of Energy shall annually review the amount of the fees established to evaluate whether the amount will be sufficient to offset the costs. [NWPA Section 302(a)(4)]

C. (DOE/RW) DOE shall annually review the adequacy of the fee and propose an adjustment, if necessary, in order to ensure full cost recovery by the Government. Any proposed adjustment to the said fee will be transmitted to Congress and shall be effective after a period of 90 days of continuous session has elapsed following receipt of such transmittal unless either House of Congress adopts a resolution disapproving the proposed adjustment. [NWPA Section 302(a)(4)] [10CFR961.11 Article VIII.A.4]

D. (Purchaser) Effective April 7, 1983, Purchaser shall be charged a fee in the amount of 1.0 mill per kilowatt hour (1 mill/kWh) electricity generated and sold. [10CFR961.11 Article VIII.A.1]

E. (Purchaser) Payment shall be made as specified in 10CFR961.11 Article VIII.B. [10CFR961.11 Article VIII.B]

F. (DOE/RW) All receipts, proceeds, and revenues realized by DOE under the contract shall be deposited in the Nuclear Waste Fund, as established in the U.S. Treasury. [10CFR961.1]

3.7.3 Waste Acceptance Management Segment

3.7.3.1 Waste Acceptance Management Segment Description

This segment provides the procedures and personnel required to accept the custody of the waste in accordance with established contracts/agreements. It includes inspecting the waste at the Purchaser/Producer site while it is being prepared and loaded into the transportation cask, ensuring the proper type of transportation cask subsystem is delivered to the Purchaser/Producer site, material control and accountability activities, and accepting the waste into the CRWMS with all required documentation.

3.7.3.1.1 Waste Acceptance Management Segment Functions

This segment shall be capable of performing all functions assigned to it in Table B-1 in Appendix B. These functions are:

A. Accept Waste (1.1)
B. Observe Waste Preparations (1.1.4)
C. Observe Preliminary Waste Preparations (1.1.4.1)
D. Verify Waste Description (1.1.4.2)
E. Notify Purchaser/Producer of Improperly Described Waste (1.1.4.3)
F. Accept Waste Title/Documentation (1.1.5)
G. Resolve Improperly Described Waste (1.1.6)
H. Control and Account for Waste Inventory (1.1.8)
I. Perform Inventory Control (1.1.8.1)
J. Provide Accountability (1.1.8.2)
K. Provide Material Tracking (1.1.8.3)

Descriptions for these functions are included in Appendix A. [Derived by CRD 3.7.1.1.1]

3.7.3.1.2 Waste Acceptance Management Segment Interfaces

The lower level Design Requirements Document identifies, describes, and specifies requirements for interfaces between segments.

3.7.3.2 Waste Acceptance Management Segment Requirements

3.7.3.2.1 Shipping Records

(Purchaser, Producer) The Purchaser/Producer shall provide written documentation and certification:

A. (Purchaser, Producer) Of cask conditions and contents (including but not limited to SNF matrixed to the unique MPC identifier) prior to transfer to the receiving party in accordance with 10CFR961.11 Article VI.B.2. [10CFR71.5a][10CFR961.11 Article VI.B.2]

B. (Purchaser, Producer) That the transportation cask subsystem (including the MPC, if applicable) has been packaged to meet DOE, DOT, and NRC requirements, and to transfer care, custody and control of the shipment. [10CFR40.13(c)(6)] [10CFR71.5a][10CFR961.11 Article VI.B.2][10CFR961.11 Appendix E.B.6(c)] [49CFR172.204(a)]

C. (Purchaser, Producer) Of the name of each radionuclide that is listed in 49CFR173.435, in order of decreasing radiotoxicity, whose activity comprises 1% or greater of the total activity at the time of shipment. [Derived]

D. (Producer only) That the standard HLW form did not exceed 400°C to ensure the glass transition temperature was not exceeded. [Derived]

E. (Producer only) Of the hazardous waste classification for land disposal. [40CFR262]

F. (Purchaser) Of the sealing and inspection of the MPC welds. [10CFR60.135(a)]

3.7.3.2.2 Fee Receipt Determination

(DOE/RW) No HLW or SNF generated or owned by any Department of the United States shall be disposed of in the CRWMS unless fees have been deposited in the Nuclear Waste Fund equivalent to the fees that would be paid if the waste were generated by civilian nuclear power reactors. [NWPA Section 302(b)(4)]

3.7.3.2.3 Routine Determinations

(Purchaser, Producer) Prior to each shipment of licensed material, the Purchaser/Producer shall ensure the transportation cask with its contents satisfies the applicable requirements of 10CFR71.87. [10CFR71.87]

3.7.3.2.4 Title Transfer

A. (DOE/RW) Delivery and acceptance in writing by DOE of any SNF and/or HLW at a DOE facility shall constitute a transfer of title to DOE of the SNF and/or HLW. [NWPA Section 123] [10CFR961.11 Article I.10] [10CFR961.11 Article II]

B. (DOE/RW, Producer) DOE/OCRWM shall accept HLW at a designated loading facility adjacent to the Producer HLW facility. [DHLW: MOA between DP and RW, 1986] [CHLW: Derived] <TBR>

C. (DOE/RW, Purchaser, Producer) Title to SNF and/or HLW shall transfer to DOE at the Purchaser/Producer site. DOE shall be solely responsible for control of all material upon transfer of title. DOE has the right to dispose, as it sees fit, of any SNF and/or HLW to which it has taken title. Purchasers/Producers shall have no claim against DOE or the Government for such SNF or HLW, nor shall the Government be obligated to compensate the Purchaser/Producer for such material. [Purchaser: 10CFR961.11 Article VII] [Producer: Derived]

3.7.3.2.5 Observation by DOE

A. (DOE/RW, Purchaser, Producer) DOE/OCRWM may designate a representative(s) to observe the preparatory activities conducted at the Purchaser/Producer site. The Purchaser/Producer shall allow the designated representative(s) access to the site. [Purchaser: 10CFR961.11 Article IV.A.2(a)] [Producer: Derived]

B. (DOE/RW, Purchaser, Producer) DOE/OCRWM shall verify the description of the SNF and/or HLW during MPC and transportation cask loading and prior to acceptance, in accordance with 10CFR961.11 Appendices E and F. [10CFR961.11 Article VI.B.2]

C. (WA) WA shall have the capability to inspect, verify, and record the identification numbers, description, and characteristics of:

(1) SNF prior to loading into an MPC or a transportation cask

(2) HLW prior to loading into a transportation cask

(3) Loaded MPC prior to loading into a transportation cask.

[10CFR961.11 Article VI.B.2] [CRD 3.2.1.1.A]

3.7.3.2.6 Notification of Improperly Described Waste Prior to Acceptance into CRWMS

(WA, Purchaser, Producer) If SNF and/or HLW is determined by WA to be improperly described prior to acceptance by DOE/OCRWM at the Purchaser/Producer site, WA shall promptly notify the Purchaser/Producer in writing. DOE/OCRWM reserves the right to refuse to accept improperly described waste. The Purchaser/Producer must not transfer title of improperly described SNF and/or HLW unless DOE/OCRWM agrees to accept title under other arrangements agreed to in writing by the parties. [Purchaser: 10CFR961.11 Article VI.B.3(a)][Producer: DOE/RW-0333P]

3.7.3.2.7 Transaction Reporting

(WA, Purchaser) A Nuclear Material Transaction Report (DOE/NRC Form-741) shall be completed and distributed whenever SNF is transferred or received. [10CFR72.78] [10CFR75.31] [10CFR75.33(a)] [CRD 3.3.8.2C]

3.7.3.2.8 Initial Inventory Reporting

(WA, Purchaser) A Material Balance Report (DOE/NRC Form-742) shall be completed and distributed reporting initial inventory. [10CFR72.76] [10CFR75.31] [10CFR75.32] [CRD 3.3.8.2C]

3.7.4 Support Segment

3.7.4.1 Support Segment Description

This segment provides the facilities, equipment and personnel required to support WA planning and operation. It includes administrative and support facilities (a complex for all of the administrative and personnel services necessary for operation of WA; it may be co-located with another CRWMS facility), support equipment, ADP support, and records/data management (Facility Interface Capability Assessment studies, storage requirements).

3.7.4.1.1 Support Segment Functions

This segment shall be capable of performing all functions assigned to it in Table B-1 in Appendix B. These functions are:

A. Accept Waste (1.1)
B. Define Waste Acceptance Criteria (1.1.1)
C. Establish Contracts/Agreements (1.1.2)
D. Plan for Waste Acceptance (1.1.3)
E. Allocate Waste System Capacity (1.1.3.1)
F. Collect Waste Data (1.1.3.1.1)
G. Rank/Order Waste (1.1.3.1.2)

H. Allocate Annual Capacity to Purchasers/Producers (1.1.3.1.3)
I. Identify Waste Location/Characteristics (1.1.3.2)
J. Evaluate DCS (1.1.3.2.1)
K. Evaluate DCS Exchange Requests (1.1.3.2.2)
L. Evaluate Request for Nonstandard Waste Delivery (1.1.3.2.3)
M. Evaluate FDS (1.1.3.2.4)
N. Define Site Interface Capabilities (1.1.3.3)
O. Observe Waste Preparations (1.1.4)
P. Observe Preliminary Waste Preparations (1.1.4.1)
Q. Verify Waste Description (1.1.4.2)
R. Notify Purchaser/Producer of Improperly Described Waste (1.1.4.3)
S. Accept Title/Documentation (1.1.5)
T. Resolve Improperly Described Waste (1.1.6)
U. Provide Fee Collection (1.1.7)

Descriptions for these functions are included in Appendix A. [Derived by CRD 3.7.1.1.1]

3.7.4.1.2 Support Segment Interfaces

The lower level Design Requirements Document identifies, describes, and specifies requirements for interfaces between segments.

3.7.4.2 Support Segment Requirements

3.7.4.2.1 Resolution of Improperly Described Waste After Acceptance into CRWMS

(WA, Purchaser, Producer) If subsequent to its acceptance, WA finds SNF and/or HLW is improperly described, WA shall promptly notify the Purchaser/Producer in writing of such a finding. In this event, the Purchaser/Producer must provide WA with a proper description within 30 days. In the event that the Purchaser/Producer fails to provide the proper description, DOE may hold in abeyance any and all further deliveries scheduled. [10CFR961.11 Article VI.B.3(b)][DOE/RW-0333P]

3.7.4.2.2 Annual Report to Purchaser/Producer

(DOE/RW) DOE shall annually provide to the Purchaser pertinent information on the waste disposal program including information on cost projections, project plans and progress reports. This information shall be available to the Producer upon request. [10CFR961.11 Article IV.B.4]

3.7.4.2.3 Waste Process Records

(WA) WA shall provide storage area to keep records showing the receipt and inventory (including location) of all SNF and HLW in the CRWMS. The records must include as a minimum the name of shipper of the material for each shipment, the estimated quantity of radioactive material per item, item identification, and storage location. [Derived]

3.7.4.2.4 Duplicate Records Storage

(WA) WA shall provide storage facilities to keep duplicate records of waste. The duplicate set of records must be kept at a separate location sufficiently remote from the original records that a single event would not destroy both sets of records. [Derived]

3.7.4.2.5 Record Disposition

(WA) WA shall disposition records in accordance with DOE Order 1324.2. [DOE Order 3790.1A (5)(b)(2)(g)(3)]

3.8 PRECEDENCE

A. (WA) The general order of precedence for requirements is:

(1) Federal Law
  (a) Statutes and Treaties
  (b) Regulations and Executive Orders
  (c) Other (e.g., DOE Orders)
(2) State Law and Tribal Law
(3) Local Ordinances
(4) National and International Standards

[CRD]

B. (WA) In resolving questions of precedence involving DOE Orders or CFRs that address items covered by the CFRs issued by the NRC, the NRC requirements shall take precedence. [MOA NS/RW, 4/16/92]

3.9 QUALIFICATION/QUALITY ASSURANCE

(WA, Purchaser, Producer) WA shall require the following of the Purchaser/Producer:

A. (Producer) The Producer shall establish, maintain, and execute a quality assurance program satisfying each of the applicable criteria of the DOE OCRWM *Quality Assurance Requirements and Description* (QARD), and satisfying any specific provisions which are applicable to WA activities. [DOE/RW-0333P]

B. (Producer) The Producer quality assurance program shall cover the activities from the time of waste form production through waste acceptance. [DOE/RW-0333P]

C. (Producer) The Producer shall prepare and maintain documentation sufficient to demonstrate canistered waste form compliance with the WA-SRD, WCP, and WQR as lifetime QA records. Copies of these records must be made available to the Federal Repository Operator at the time the repository is ready to begin accepting canistered waste forms from the Producer. Other documentation generated during preparation and implementation of the WCP and WQR must be collected and maintained as nonpermanent records. [DOE/RW-0333P]

D. (Purchaser, Producer) The Purchaser/Producer shall handle notification and disposition of other-than-standard SNF and canisters of HLW in accordance with section 3.7.1.2.8. [10CFR961.11 Article VI.A.2(b)][DOE/RW-0333P]

E. (Purchaser) The Purchaser shall have a quality assurance program approved by the Nuclear Regulatory Commission that satisfies the criteria in 10CFR50 Appendix B or other appropriate regulation. [10CFR50 Appendix B]

INTENTIONALLY LEFT BLANK

4. CONFORMANCE VERIFICATION

4.1 RESPONSIBILITIES

This section relates the requirements of this document to the compliance methods of section 4.2 that shall be used to verify the requirements. As specified in the OCRWM Test and Evaluation Master Plan (to be produced), the CRWMS projects shall establish a test and evaluation program to demonstrate their conformance of the design to the system requirements as required in the verification cross-reference table of section 4.3. The test and evaluation program and the conformance verification activities are not intended to replace activities associated with NRC-license application or the satisfaction of that license.

4.2 METHODS

The methods of compliance to be used are:

A. **Analysis.** Analysis is the process needed to verify a requirement by rational thinking, tradeoff studies, modeling, and processing test data and accumulated results to reach a conclusion. Analysis involves the processing of accumulated results and conclusions, intended to provide proof that verification of a requirement has been accomplished. The analytical results may be comprised of a compilation or interpretation of existing information or derived from lower level examinations, tests, demonstrations, or analyses.

B. **Examination.** Examination is the process of investigating a product to verify that required features are incorporated. Examination consists of investigation, without the use of special laboratory appliances, procedures, supplies, or services, to determine conformance to those specified requirements which can be determined by such investigations. Examination is generally nondestructive and includes, but is not limited to, visual, auditory, olfactory, tactile, and other investigations; simple physical manipulation; gauging; and measurement.

C. **Test.** Test is the quantitative process whereby data is collected over a specified time period, under controlled conditions, in order to document the as-built performance of a product. A test denotes the determination of the properties or elements of items (or components thereof) by technical means, including functional operation, the application of established principles and procedures and the collection of quantitative data. The analysis of data derived from testing is an integral part of the method.

D. **Demonstration.** Demonstration is the qualitative process of exercising a product to verify its operability, where data may or may not be collected. Demonstration differs from test by directness of approach in the verification of a requirement and is accomplished without the use of instrumentation or special equipment. Thus, operation of a representative item in or near its use environment would be defined as

a Demonstration rather than a Test. Demonstration attempts to verify, qualitatively, the performance of a function, where as Test involves verifying performance within a specific range of measurement.

4.3 CROSS-REFERENCE

Table 4-1 correlates the requirements of sections 3 and 5 with the method to be used to comply with the requirements. Documentation of compliance will be accomplished through the use of detailed procedures to be developed and performed on all procured, constructed, and developed equipment, structures, and software.

In the following table, items marked "N/A" (not applicable) have no verification required. These items are titles or explanatory materials. The other columns "A" (analysis), "E" (examination), "T" (test), and "D" (demonstration) refer to the verification methods identified in section 4.2.

When more than one method of compliance is marked in Table 4-1, compliance must be verified by one or more of the methods marked.

Table 4-1. Verification Matrix

SECTION 3 & 5 PARA.	TITLE	N / A	A	E	T	D
3.1	SYSTEM DEFINITION	X				
3.1.1	Waste Acceptance System Functions - Accept Waste	X				
3.1.2	Waste Acceptance Functional Relationships	X				
3.1.3	System Descriptions	X				
3.1.4	Function to Architecture Cross-Reference	X				
3.1.5	Major Considerations	X				
3.1.5A		X				
3.1.5B		X				
3.1.5C		X				
3.2	CHARACTERISTICS	X				
3.2.1	Performance Characteristics	X				
3.2.1.1	SNF and HLW Acceptance	X				
3.2.1.1A			X	X		

Table 4-1. Verification Matrix (Continued)

SECTION 3 & 5 PARA.	TITLE	N / A	A	E	T	D
3.2.1.1B			X			X
3.2.1.1C			X			
3.2.1.1D				X		
3.2.1.2	SNF Receipt			X		
3.2.1.3	HLW Receipt		X			X
3.2.1.4	Initial Operations		X			
3.2.1.5	Receipt Rate		X			X
3.2.2	[Reserved]	X				
3.2.3	Interface Requirements	X				
3.2.3.1	[Reserved]	X				
3.2.3.2	Interfaces with Other CRWMS Elements	X				
3.2.3.2.1	WA-MRS Interface Requirements	X				
3.2.3.2.1.1	WA-MRS Facility Interface Requirements	X				
3.2.3.2.1.1A			X	X		X
3.2.3.2.1.1B			X			X
3.2.3.2.1.1C			X			X
3.2.3.2.1.1D			X			X
3.2.3.2.1.2	WA-OSTS Interface Requirements	X				
3.2.3.2.1.2A			X	X		
3.2.3.2.2	WA-MGDS Interface Requirements	X				
3.2.3.2.2A			X	X		X
3.2.3.2.2B			X			X
3.2.3.2.2C			X	X		X
3.2.3.2.2D			X			X
3.2.3.2.2E			X			X

Table 4-1. Verification Matrix (Continued)

SECTION 3 & 5 PARA.	TITLE	N/A	A	E	T	D
3.2.3.2.3	WA-Transportation Interface Requirements	X				
3.2.3.2.3A			X	X		X
3.2.3.2.3A(1)				X		X
3.2.3.2.3A(2)				X		X
3.2.3.2.3A(3)				X		X
3.2.3.2.3B			X			X
3.2.3.2.3C			X			X
3.2.3.2.3D			X			X
3.2.3.2.3E				X		X
3.2.3.2.3F			X	X		
3.2.3.2.4	Segment Interface Summary	X				
3.2.3.2.4A			X			
3.2.3.2.4B			X			
3.2.4	[Reserved]	X				
3.2.5	[Reserved]	X				
3.2.6	[Reserved]	X				
3.2.7	[Reserved]	X				
3.2.8	[Reserved]	X				
3.2.9	[Reserved]	X				
3.3	DESIGN AND CONSTRUCTION	X				
3.3.1	[Reserved]	X				
3.3.2	[Reserved]	X				
3.3.3	[Reserved]	X				
3.3.4	[Reserved]	X				
3.3.5	[Reserved]	X				

Table 4-1. Verification Matrix (Continued)

SECTION 3 & 5 PARA.	TITLE	N / A	A	E	T	D
3.3.6	Safety		X	X		
3.3.7	Human Factors Engineering			X		X
3.3.8	Methods and Controls	X				
3.3.8.1	Material Management			X		
3.3.8.2	Inventory Control	X				
3.3.8.2.1	Radioactive Material Inventory	X				
3.3.8.2.1A			X	X		
3.3.8.2.1B				X		
3.3.8.2.1C				X		
3.3.9	Government Furnished Property	X				
3.3.9A				X		
3.3.9B				X		
3.3.10	Computer Resources	X				
3.3.10A				X		
3.3.10B				X		
3.3.11	Environmental Protection Requirements	X				
3.4	DOCUMENTATION	X				
3.4.1	[Reserved]	X				
3.4.2	[Reserved]	X				
3.4.3	[Reserved]	X				
3.4.4	Test Plans and Procedures			X		
3.4.5	Quality Assurance Documentation			X		
3.4.6	[Reserved]	X				
3.4.7	Computer Documentation			X		
3.4.8	Records Management	X				

Table 4-1. Verification Matrix (Continued)

SECTION 3 & 5 PARA.	TITLE	N / A	A	E	T	D
3.4.8A				X		
3.4.8B				X		
3.5	[Reserved]	X				
3.6	PERSONNEL AND TRAINING	X				
3.6.1	[Reserved]	X				
3.6.2	Training	X				
3.6.2.1	General Requirements			X		
3.7	SEGMENT REQUIREMENTS	X				
3.7.1	Contract/Agreement Management Segment	X				
3.7.1.1	Contract/Agreement Management Segment Description	X				
3.7.1.1.1	Contract/Agreement Management Segment Functions		X			
3.7.1.1.2	Contract/Agreement Management Segment Interfaces	X				
3.7.1.2	Contract/Agreement Management Segment Requirements	X				
3.7.1.2.1	Waste Form Criteria	X				
3.7.1.2.1A			X			X
3.7.1.2.1A(1)						X
3.7.1.2.1A(2)						X
3.7.1.2.1A(3)						X
3.7.1.2.1B			X			X
3.7.1.2.1C			X			X
3.7.1.2.1D						X
3.7.1.2.1.1	SNF Specifications		X	X		
3.7.1.2.1.1.1	SNF Standard Form			X		

Table 4-1. Verification Matrix (Continued)

SECTION 3 & 5 PARA.	TITLE	N/A	A	E	T	D
3.7.1.2.1.1.2	SNF Failed Form			X		
3.7.1.2.1.1.3	SNF Nonstandard Form			X		
3.7.1.2.1.1.4	SNF Data	X				
3.7.1.2.1.1.4A				X		
3.7.1.2.1.1.4B				X		
3.7.1.2.1.1.5	Multi-Purpose Canisters Containing SNF	X				
3.7.1.2.1.1.5A				X		
3.7.1.2.1.1.5B			X	X		
3.7.1.2.1.1.5C				X		X
3.7.1.2.1.1.5D				X		X
3.7.1.2.1.1.5E				X		X
3.7.1.2.1.2	HLW Specifications		X	X		
3.7.1.2.1.2.1	HLW Standard Form	X				
3.7.1.2.1.2.1A				X		
3.7.1.2.1.2.1B			X	X	X	X
3.7.1.2.1.2.1B(1)				X		X
3.7.1.2.1.2.1B(2)				X		X
3.7.1.2.1.2.1B(3)				X		
3.7.1.2.1.2.1B(4)				X		
3.7.1.2.1.2.1B(5)			X		X	
3.7.1.2.1.2.1B(6)			X	X		
3.7.1.2.1.2.1B(7)			X		X	X
3.7.1.2.1.2.1B(8)				X		
3.7.1.2.1.2.2	HLW Nonconforming Form			X		
3.7.1.2.1.2.3	HLW Nonstandard Form			X		

Table 4-1. Verification Matrix (Continued)

SECTION 3 & 5 PARA.	TITLE	N / A	A	E	T	D
3.7.1.2.1.2.4	Criticality Safety for HLW		X			
3.7.1.2.1.2.5	Waste Form - Material Compatibility		X		X	X
3.7.1.2.1.2.6	Chemical Composition	X				
3.7.1.2.1.2.6A						X
3.7.1.2.1.2.6B						X
3.7.1.2.1.2.7	Canister Material and Fabrication Reporting					X
3.7.1.2.1.2.8	Radionuclide Inventory		X	X		
3.7.1.2.1.2.9	Canister After Closure	X				
3.7.1.2.1.2.9A				X		X
3.7.1.2.1.2.9B				X		X
3.7.1.2.1.2.10	Removable Radioactive Contamination on Canister	X				
3.7.1.2.1.2.10A				X		
3.7.1.2.1.2.10B				X		X
3.7.1.2.1.2.10C						X
3.7.1.2.1.2.11	HLW Phase Stability and Integrity	X				
3.7.1.2.1.2.11A			X	X		
3.7.1.2.1.2.11B						X
3.7.1.2.1.2.12	Hazardous Waste Determination	X				
3.7.1.2.1.2.12A			X	X		
3.7.1.2.1.2.12B				X	X	
3.7.1.2.1.2.12C			X	X		
3.7.1.2.1.2.12D				X		
3.7.1.2.1.2.13	Consistency Test	X				
3.7.1.2.1.2.13A			X		X	
3.7.1.2.1.2.13B			X		X	

Table 4-1. Verification Matrix (Continued)

SECTION 3 & 5 PARA.	TITLE	N / A	A	E	T	D
3.7.1.2.1.2.14	Canister Impact Characteristics		X		X	X
3.7.1.2.1.2.15	Canister Label Requirements			X		X
3.7.1.2.1.2.16	Canister Handling Features	X				
3.7.1.2.1.2.16A			X	X		
3.7.1.2.1.2.16B			X	X	X	
3.7.1.2.1.2.16C			X	X	X	
3.7.1.2.1.2.16D			X	X	X	
3.7.1.2.1.2.16E			X	X	X	
3.7.1.2.1.2.17	Dose Rate at Shipment		X	X		
3.7.1.2.1.2.18	HLW Condition at Delivery			X		X
3.7.1.2.1.2.19	Records			X		
3.7.1.2.1.2.19.1	Waste Form Compliance Plan (WCP)			X		
3.7.1.2.1.2.19.2	Waste Form Qualification Report (WQR)			X		
3.7.1.2.1.2.19.3	Production Record			X		
3.7.1.2.1.2.19.4	Storage and Shipping Record			X		
3.7.1.2.1.2.20	HLW Annual Report			X		
3.7.1.2.2	Contract/Agreement	X				
3.7.1.2.2A				X		
3.7.1.2.2B				X		
3.7.1.2.2C				X		
3.7.1.2.2D				X		
3.7.1.2.2E				X		
3.7.1.2.2F				X		
3.7.1.2.2G				X		
3.7.1.2.2H				X		

Table 4-1. Verification Matrix (Continued)

SECTION 3 & 5 PARA.	TITLE	N / A	A	E	T	D
3.7.1.2.3	Acceptance Priority Ranking			X		
3.7.1.2.4	Annual Capacity Report			X		
3.7.1.2.5	Emergency Deliveries			X		
3.7.1.2.6	Delivery Commitment Schedules	X				
3.7.1.2.6A			X	X		
3.7.1.2.6B			X	X		
3.7.1.2.6C			X	X		
3.7.1.2.6D				X		
3.7.1.2.6E				X		
3.7.1.2.7	Exchange Requests	X				
3.7.1.2.7A				X		
3.7.1.2.7B			X	X		
3.7.1.2.8	Request for Nonstandard or Nonconforming Waste Delivery	X				
3.7.1.2.8A				X		
3.7.1.2.8B				X		
3.7.1.2.9	Final Delivery Schedules	X				
3.7.1.2.9A				X		
3.7.1.2.9B			X	X		
3.7.1.2.9C			X	X		
3.7.1.2.10	Final Description of Waste			X		
3.7.1.2.11	Waste Selection		X			
3.7.2	Waste Fund Management Segment	X				
3.7.2.1	Waste Fund Management Segment Description	X				
3.7.2.1.1	Waste Fund Management Segment Functions		X			
3.7.2.1.2	Waste Fund Management Segment Interfaces	X				

Table 4-1. Verification Matrix (Continued)

SECTION 3 & 5 PARA.	TITLE	N / A	A	E	T	D
3.7.2.2	Waste Fund Management Segment Requirements	X				
3.7.2.2A			X	X		
3.7.2.2B			X	X		
3.7.2.2C				X		
3.7.2.2D				X		
3.7.2.2E				X		
3.7.2.2F				X		
3.7.3	Waste Acceptance Management Segment	X				
3.7.3.1	Waste Acceptance Management Segment Description	X				
3.7.3.1.1	Waste Acceptance Management Segment Functions		X			
3.7.3.1.2	Waste Acceptance Management Segment Interfaces	X				
3.7.3.2	Waste Acceptance Segment Requirements	X				
3.7.3.2.1	Shipping Records			X		
3.7.3.2.2	Fee Receipt Determination		X	X		
3.7.3.2.3	Routine Determination			X		
3.7.3.2.4	Title Transfer	X				
3.7.3.2.4A				X		
3.7.3.2.4B				X		
3.7.3.2.4C				X		
3.7.3.2.5	Observation by DOE	X				
3.7.3.2.5A				X		
3.7.3.2.5B				X		
3.7.3.2.5C			X		X	
3.7.3.2.6	Notification of Improperly Described Waste Prior to Acceptance into CRWMS			X		

Table 4-1. Verification Matrix (Continued)

SECTION 3 & 5 PARA.	TITLE	N / A	A	E	T	D
3.7.3.2.7	Transaction Reporting			X		
3.7.3.2.8	Initial Inventory Reporting			X		
3.7.4	Support Segment	X				
3.7.4.1	Support Segment Description	X				
3.7.4.1.1	Support Segment Functions		X			
3.7.4.1.2	Support Segment Interfaces	X				
3.7.4.2	Support Segment Requirements	X				
3.7.4.2.1	Resolution of Improperly Described Waste After Acceptance into CRWMS			X		
3.7.4.2.2	Annual Report to Purchaser/Producer			X		
3.7.4.2.3	Waste Process Records		X	X		
3.7.4.2.4	Duplicate Records Storage		X	X		
3.7.4.2.5	Record Disposition			X		
3.8	PRECEDENCE	X				
3.8A		X				
3.8B		X				
3.9	QUALIFICATION/QUALITY ASSURANCE	X				
3.9A			X	X		
3.9B			X	X		
3.9C			X	X		
3.9D				X		
3.9E				X		
5.1	KEY DECISIONS			X		
5.2	REQUIREMENTS			X		

5. PREPARATION FOR OPERATIONS

5.1 KEY DECISIONS

The development of the CRWMS is currently being pursued by OCRWM under two active major system acquisitions (MSAs): the Yucca Mountain Site Characterization Project, and the MRS Project, which includes the MRS facility, the Transportation System and Waste Acceptance. Preparation for operations is governed by a series of Key Decision (KD) points in the MSA process. The Energy System Acquisition Advisory Board (ESAAB) supports the DOE Acquisition Executive by providing advice and assistance at those points. A KD for approval to commence operation, is scheduled prior to transition from acquisition and construction to operation for applicable CRWMS elements. Preparation of applications for the licenses, certificates, and permits (e.g., required by the NRC, EPA and other government agencies) that must be issued prior to commencement of operations shall be undertaken in a timely manner to ensure their review, approval and issuance prior to this KD. Transition to the operations phase is not formally made until demonstrated capability to meet technical performance goals specified in CRWMS requirements documents and specifications are achieved, and required licenses, certificates, and permits have been issued. These conditions are confirmed by the ESAAB. In 1998, the MPC and OSTS will be available for Purchaser use. Waste Acceptance may perform observation functions. Acceptance of SNF from Purchasers will begin after commencement of MRS facility operations, and acceptance of HLW from Producers will begin after commencement of MGDS operations.

In accordance with DOE Order 4700.1, a presentation package shall be developed to support ESAAB determination of the readiness of each element of CRWMS to proceed with operations. As a minimum, the presentation packages to support the ESAAB shall contain: a description of the project; background data; major technical and performance requirements; licenses, certificates and permits; readiness to proceed with operations; and problems, issues, or items of concern.

5.2 REQUIREMENTS

In addition to satisfying the requirements of the specifications, all elements of the CRWMS shall establish programs to ensure, at the commencement of operations, the availability of sufficient trained personnel to operate the elements and validated documentation to support the operations.

The elements shall additionally establish logistics support systems, to include ensuring the availability of sufficient spares to support the element maintenance concept and the design availability factors used in the design.

Specific plans and procedures for acceptance, operational, and integrated testing, as well as preparation of test documentation, will be governed by the Test and Evaluation Master Plan (TEMP), to be published separately.

THIS PAGE INTENTIONALLY LEFT BLANK

6. NOTES

6.1 GLOSSARY

Architecture is the physical system actually built, found, or selected to perform a function subject to its stated requirements.

Atomic Energy Defense Activity is any activity of the Secretary performed in whole or in part in carrying out any of the following functions:

(A) naval reactors development;
(B) weapons activities including defense inertial confinement fusion;
(C) verification and control technology;
(D) defense nuclear materials production;
(E) defense nuclear waste and materials by-products management;
(F) defense nuclear materials security and safeguards and security investigations; and
(G) defense research and development.

Borosilicate waste glass is glass typically containing approximately 20 to 40 wt.% waste oxides, 40 to 65 wt.% silica, 5 to 10 wt.% boron oxide, and 10 to 20 wt.% alkali oxides, plus other oxide constituents.

Canister is the structure surrounding the waste form (e.g., HLW immobilized in borosilicate glass) that facilitates handling, storage, transportation, and/or disposal. A canister is a metal receptacle with the following purpose: (1) for solidified HLW, its purpose is a pour mold and (2) for SNF, it may provide structural support for intact SNF, loose rods, nonfuel components, or containment of radionuclides. (See definition of multi-purpose canister.)

Cask is a container for shipping or storing spent nuclear fuel and/or canistered high-level waste that meets all applicable regulatory requirements.

Cask Subsystem is defined under transportation cask subsystem.

Civilian Radioactive Waste Management System (CRWMS) is the composite of sites, facilities, systems, equipment, materials, information, activities, and personnel required to perform those activities necessary to manage spent nuclear fuel and high-level radioactive waste disposal.

Commercial high-level radioactive waste (CHLW) is the high-level radioactive waste, as defined by NWPA Section 2(12), resulting from reprocessing spent nuclear fuel in a commercial facility.

Consolidation is the operation performed on spent fuel assemblies during which the upper and lower fuel-assembly tie plates are removed, the assembly spacer grids and any other assembly structural members are removed, and the fuel rods are collected and formed into a closely packed array in a canister or container. The nonfuel structural members of the fuel assemblies are reduced in volume and placed in canisters or containers for shipment and disposal. [DOE/RW-0199, Vol. VIII, Part B, page G-18]

Contract is the agreement set forth in 10CFR961.11 and any duly executed amendment or modification thereto.

Defense high-level radioactive waste (DHLW) is the high-level radioactive waste, as defined by NWPA Section 2(12), resulting from reprocessing spent nuclear fuel in a defense facility.

Disposal is the isolation of radioactive wastes from the accessible environment. [10CFR60.2]. Disposal means the emplacement in a repository of high-level radioactive waste, spent nuclear fuel, or other highly radioactive material with no foreseeable intent of recovery, whether or not such emplacement permits the recovery of such waste. [10CFR961.11] [NWPA Section 2(9)]

DOE/NRC Form-741 is a Nuclear Material Transaction Report is completed whenever SNF or HLW is transferred or received. [10CFR75.31, .33, .35]

DOE/NRC Form-742 is a Material Balance Report is completed to document the quantities of SNF and/or HLW contained at an installation as of the initial inventory reporting date. [10CFR75.31, .32, .33, .35]

Function is a primary statement of purpose; it defines what a system or subsystem must accomplish to meet the system mission.

Function flow diagram is a diagram that graphically illustrates the relationships among functions.

Functional interface is the interaction between functions, as in the flow of material or information between a sequence of activities.

Glass transition temperature is the temperature at which the slope of the thermal expansion versus temperature curve of the glass shows a sharp increase. Below this temperature, the viscous flow or molecular rearrangement in glass is negligible.

High-level radioactive waste (HLW) means (1) the highly radioactive material resulting from the reprocessing of spent nuclear fuel, including liquid waste produced directly in reprocessing and any solid material derived from such liquid waste that contains fission products in sufficient concentrations; and (2) other highly radioactive material that the Nuclear Regulatory Commission, consistent with existing law, determines by rule requires permanent isolation. The CRWMS will only accept solidified HLW. For the purposes of this document, HLW is vitrified borosilicate

glass cast in a stainless steel canister. [NWPA Section 2(12)] [10CFR72.3] [10CFR960.2] [10CFR961.11] [Note that the 10CFR60 definition of HLW includes SNF]

Multiple element sealed canister is an engineered structure containing multiple fuel elements and comprised of guide sleeves, spacer discs, siphon tubes, and top and bottom shield plugs formed into a corrosion resistant stainless steel canister that is backfilled with an inert gas and hermetically sealed by a welded closure lid.

Multi-purpose canister (MPC) refers to a sealed, metallic container maintaining multiple SNF assemblies in a dry, inert environment and overpacked separately and uniquely for the various system elements of storage, transportation, and disposal. (See definition of waste form.)

Nonconforming waste form is an individual HLW form that has been produced, handled, or stored such that its compliance with the WA-SRD requirements on waste forms cannot be demonstrated.

Nonstandard waste form is a nonconforming waste form and its nonconforming condition has been reviewed and deemed acceptable into the CRWMS. Nonstandard canistered HLW may also be in a condition which requires special handling.

N-square diagram is a type of function flow diagram. The N-square diagram has been used extensively to develop data interfaces. The system functions are placed on the diagonal of an N-by-N matrix. The remainder of the squares of the matrix represent interface inputs and outputs. Inputs to a function appear in the column above and below the function, and outputs from a function appear in the row to the left and right of a function. Where blank square exists there is no interface between the respective functions. N-square diagrams are used to develop and document system and system element interfaces. The N-square diagram may also be used to document hardware-to-hardware interfaces where hardware items are placed on the diagonal and their interfaces shown in the remaining squares of the matrix.

On-Site Transfer and Storage (OSTS) is the equipment for transfer and storage, at Purchaser sites, of SNF contained in MPCs. The development and design of the OSTS are presumed to be performed by the CRWMS. The procurement and operation of the OSTS are presumed to be at the discretion of the Purchasers.

Overpack is a structural component used to hold and protect the MPC so that the combination meets the NRC requirements for its application. There are several types of overpacks: one for transportation, 10CFR71; one for transfer, 10CFR72; one for storage, 10CFR72; and one for disposal, 10CFR60. An overpack is designed for its particular use in conjunction with the MPC.

Prime mover is the vehicle providing motive power to the transporter.

Producer is any generator of high-level radioactive waste resulting from atomic energy defense activities or any producer of vitrified commercial HLW.

Product Consistency Test is a test developed to determine the composition and homogeneity of complex and varied radioactive waste glasses. [Ref. US-DOE Report WSRC-TR-90-539, Rev. 2 (1992) Nuclear Waste Glass Product Consistency Test - Version 5.0]

Production Record is the documentation, provided by the Producer, that describes the actual canistered waste form.

Purchaser is any person, other than a Federal agency, who is licensed by the Nuclear Regulatory Commission to use a utilization or production facility under the authority of sections 103 or 104 of the Atomic Energy Act of 1954 (42USC2133, 2134) or who has title to SNF or HLW and who has executed a contract or other contractual agreement with DOE. Purchaser SNF includes Government-owned SNF from commercial industry and civilian development programs. For the purposes of this document, West Valley Demonstration Project (WVDP), which has commercial HLW, is considered a "Purchaser" only for contract/agreement purposes; otherwise WVDP is considered a "Producer".

RW-859 data is data from Nuclear Fuel Data Form RW-859, submitted either annually or 90 days after startup of a new cycle by Purchaser which lists the site-specific total SNF inventory and projected discharges.

Segment is a distinct, top-level component of the overall architecture of each system element to which functions and requirements are allocated.

Specialty engineering encompasses those disciplines that support the design process by applying knowledge from a specific area to ensure system operability in its operational environment. They include reliability, availability, maintainability, human factors engineering, safeguards and security, integrated logistics support, transportability, system safety, electromagnetic compatibility, parts/materials/processes and other specialist areas generally involved in development of systems. These specialties are integrated into the development effort through the system engineering process.

Spent nuclear fuel (SNF) is fuel that has been withdrawn from a nuclear reactor following irradiation, the constituent elements of which have not separated by reprocessing [NWPA Section 2(23)] [10CFR961.11]. {Specifically in this document, SNF includes (1) intact, nondefective fuel assemblies; (2) failed fuel assemblies in canisters; (3) fuel assemblies in canisters; (4) consolidated fuel rods in canisters; (5) nonfuel components inserted in PWR fuel assemblies, including, but not limited to, control rod assemblies, burnable poison assemblies, thimble plug assemblies, neutron source assemblies, instrumentation assemblies; (6) fuel channels attached to BWR fuel assemblies; and (7) nonfuel components and structural parts of assemblies in canisters.}

Standard waste form is a waste form that meets the physical characteristics specified in the WA-SRD as standard. Other standard HLW forms will be defined in subsequent revisions of the WA-SRD.

Storage and Shipping Records are the documents that describe the physical attributes of the canistered waste forms. The records also identify any unexpected events, such as thermal excursions, which have occurred during storage.

System element is one of the elements of the CRWMS (Waste Acceptance, Transportation, MRS, or MGDS). This differs from the "project" that may be initiated by DOE to manage and control development of one or more system elements (e.g., the Yucca Mountain Project or the MRS Project).

System engineering process is an iterative process encompassing changes at any point in the process. Possible impacts of change to the system should be analyzed during the conduct of the project. These impacts should be examined for validity, consistency, desirability, and attainability with respect to current technology, physical resources, human performance capabilities, life-cycle costs, and other constraints. The output of this analysis should either verify the existing requirements or lead to the development of new requirements that are more appropriate for the mission.

Time-temperature-transformation diagrams identify the duration of exposure at any temperature that causes significant changes in either the phase structure, the phase compositions, or the PCT response of the borosilicate glass waste type.

Transportation cask subsystem, as a minimum, shall include the complete cask, an MPC (when required), truck trailer or rail car (defined as the transporter), a tiedown system, an intermodal transfer device (when required), special tools and ancillary equipment.

Transporter is a cargo-carrying vehicle used for transportation of cargo. It includes semi-trailers, rail cars, intermodal transportation skids and equipment such as tie-down components, personnel barriers, etc. needed to make the loaded cargo-carrying vehicle transport-ready.

Waste Acceptance is the system element or organization that manages the Accept Waste function which includes acceptance of SNF and HLW into the CRWMS from the Purchaser/ Producer of such waste.

Waste form is the radioactive waste material and any encapsulating or stabilizing matrix. A loaded MPC is a canistered waste form. [10CFR60.2]

Waste Form Compliance Plan (WCP) is a document prepared by a waste producer describing planned analyses, tests, and engineering development work to be undertaken and information to be included in individual waste form production records to demonstrate compliance of a proposed waste form with Waste Acceptance Specifications.

Waste Form Qualification Report (WQR) is documentation prepared by a waste producer which describes results of analyses, tests, and engineering development work actually performed to demonstrate waste form compliance with waste acceptance specifications.

Waste package is the waste form and any containers, shielding, packing and other absorbent materials immediately surrounding an individual waste container. [10CFR60.2]

6.2 ACRONYMS AND ABBREVIATIONS

ACR	Annual Capacity Report
ADP	Automated Data Processing
ANSI	American National Standards Institute
APR	Acceptance Priority Ranking
ASME	American Society of Mechanical Engineers
BWR	Boiling Water Reactor
CFR	Code of Federal Regulations
CHLW	Commercial High-Level radioactive Waste
CRD	CRWMS Requirements Document
CRWMP	Civilian Radioactive Waste Management Program
CRWMS	Civilian Radioactive Waste Management System
DCS	Delivery Commitment Schedule
DHLW	Defense High-Level radioactive Waste
DOE	Department Of Energy
DOT	Department Of Transportation
DP	Office of Defense Programs (DOE)
EA	Environmental Assessment
EM	Office of Environmental Restoration and Waste Management (DOE)
EPA	Environmental Protection Agency
ESAAB	Energy System Acquisition Advisory Board
FDS	Final Delivery Schedule
FICA	Facility Interface Capability Assessment
HLW	High-Level radioactive Waste
IFS	Interface Specification
KD	Key Decision
M&O	Management and Operating contractor
MC&A	Material Control and Accountability
MGDS	Mined Geologic Disposal System
MOA	Memorandum Of Agreement
MPC	Multi-Purpose Canister
MRS	Monitored Retrievable Storage installation
MTU	Metric Ton(s) of initial Uranium
NRC	Nuclear Regulatory Commission
NS	Nuclear Safety
NWF	Nuclear Waste Fund
NWPA	Nuclear Waste Policy Act of 1982
NWPAA	Nuclear Waste Policy Amendments Act of 1987
NYSERDA	New York State Energy Research and Development Administration
OCRWM	Office of Civilian Radioactive Waste Management (DOE)

OMB	Office of Management and Budget (DOE)
OSTS	On-Site Transfer and Storage
PCT	Product Consistency Test
Pro	Producer
Pur	Purchaser
PWR	Pressurized Water Reactor
QA	Quality Assurance
QARD	Quality Assurance Requirements and Description
RCRA	Resource Conservation and Recovery Act
RW	Office of Civilian Radioactive Waste Management (DOE)
SNF	Spent Nuclear Fuel
SPD	Services Planning Document
SRD	System Requirements Document
SRS	Savannah River Site
SSSP	Site-Specific Servicing Plan
TBD	To Be Determined
TBR	To Be Resolved
TBP	To Be Published
TCLP	Toxicity Characteristic Leaching Procedure
TDPP	Technical Document Preparation Plan
TEMP	Test and Evaluation Master Plan
USC	United States Code
WA	Waste Acceptance
WCP	Waste form Compliance Plan
WQR	Waste form Qualification Report
WVDP	West Valley Demonstration Project

6.3 REQUIREMENTS CROSS-REFERENCE

The following tables identify how the WA-SRD responds to the requirements of the CRD. In these tables, the heading "WA-SRD Paragraph" identifies the requirement number in this document. The heading "CRD Paragraph" identifies the CRD requirement that is addressed by the identified WA-SRD requirement. In all cases, the "source document" is the document containing the source of the requirement in the WA-SRD. When a source document is enclosed in parentheses, the document identified is referenced by the requirement or used in the derivation of the requirement, but is not the literal source of the requirement. A source document entry of "Derived" identifies a derived requirement.

Table 6-1. Requirements Cross-Reference by WA-SRD Paragraph

WA-SRD Paragraph	Source Document	CRD Paragraph
3.2.1.1A	NWPA Sec. 111(a)(4)	3.2.1A
3.2.1.1B	NWPA Sec. 114(d)	Appendix A - NWPA
3.2.1.1C	10CFR72.44(g)	Appendix A - 10CFR72
3.2.1.1D	NWPA Sec. 302(a)(5), 10CFR961.11 Article II	3.2.1.1E, 3.7.1.2B, 3.7.1.2C
3.2.1.2	NWPA Sec. 111(a)(5)	Appendix A - NWPA
3.2.1.3	Derived (NWPA Sec. 111(a)(4), DOE/RW-0316P)	3.2.1A
3.2.1.4	A00000000-01717-6700-00001	3.2.1C
3.2.1.5	DOE/RW-0316P, DOE/RW-0412, A00000000-01717-2200-00001, ORNL/Sub/89-SD841/2	3.2.1C
3.2.3.2.1.1A	Derived (10CFR961.11 Article IV.B.1)	3.7.1.2D
3.2.3.2.1.1B	DOE/RW-0412, A00000000-01717-2200-00001	3.2.1C
3.2.3.2.1.1C	NWPA Sec. 302(a)(5)	3.7.1.2B
3.2.3.2.1.1D	10CFR961.11 Article VI.B.3(b)	3.7.1.2G
3.2.3.2.1.2.A	10CFR72.212(b)(3)	3.3.1.B

Table 6-1. Requirements Cross-Reference by WA-SRD Paragraph (continued)

WA-SRD Paragraph	Source Document	CRD Paragraph
3.2.3.2.2A	Derived (NWPA Sec. 111(a)(4), 10CFR961.11 Article IV.B.1)	3.2.1A, 3.2.1B, 3.7.1.2D
3.2.3.2.2B	DOE/RW-0316P, DOE/RW-0412, A00000000-01717-2200-00001, ORNL/Sub/89-SD841/2	3.2.1C
3.2.3.2.2C	Derived (DOE/RW-0316P)	3.2.1A
3.2.3.2.2D	Derived (NWPA Sec. 302(a)(5))	3.7.1.2B
3.2.3.2.2E	10CFR961.11 Article VI.B.3(b)	3.7.1.2G
3.2.3.2.3A	10CFR961.11 Article IV.B.2	3.2.1.1F, 3.7.1.2J
3.2.3.2.3A(1)	DOE/RW-0005	Appendix A - DOE/RW-0005
3.2.3.2.3A(2)	Derived (DOE/RW-0187, DOE/RW-0270P)	Appendix A - (DOE/RW-0187), (DOE/RW-0270P)
3.2.3.2.3A(3)	Derived (DOE/RW-0187, DOE/RW-0270P)	Appendix A - (DOE/RW-0187), (DOE/RW-0270P)
3.2.3.2.3B	DOE/RW-0316P, DOE/RW-0412, A00000000-01717-2200-00001, ORNL/Sub/89-SD841/2	3.2.1C
3.2.3.2.3C	Derived (10CFR961.11 Article IV.B.2)	3.2.1.1F, 3.7.1.2J
3.2.3.2.3D	Derived (10CFR961.11 Article IV.B.2)	3.2.1.1F, 3.7.1.2J
3.2.3.2.3E	10CFR71.43(b)	Appendix A - 10CFR71
3.2.3.2.3F	10CFR961.11 Article IV.B.2	3.2.1.1F, 3.7.1.2J
3.2.3.2.4.A	DOE Order 4700.1 Ch III.B.2.c(2)(c)	3.2.3.2.B
3.2.3.2.4.B	DOE Order 4700.1 Ch III.B.2.c(2)(c)	3.2.3.2.B
3.3.6	29USC651 et seq., (654 (a) - (b))	3.3.6.1A, 3.3.6.1B
3.3.7	CRD (MTR 10090)	3.3.7.14

Table 6-1. Requirements Cross-Reference by WA-SRD Paragraph (continued)

WA-SRD Paragraph	Source Document	CRD Paragraph
3.3.8.1	CRD	3.3.8.1C
3.3.8.2.1A	CRD	3.3.8.2A, 3.4.8
3.3.8.2.1B	CRD	3.3.8.2A, 3.4.8
3.3.8.2.1C	10CFR75.1	3.3.8.2C
3.3.9A	CRD	3.3.9B
3.3.9B	CRD	3.3.9C
3.3.10A	CRD	3.3.10A
3.3.10B	CRD	3.3.10B
3.4.4	CRD	3.4.4
3.4.5	CRD	3.4.5
3.4.7	DOE/RW-0333P	3.4.7
3.4.8A	DOE/RW-0333P, DOE/RW-0194P Sections 6.1, 6.3, & 6.4	Appendix A - DOE/RW-0333P, DOE/RW-0194P
3.4.8B	DOE/RW-0333P	3.4.5
3.6.2.1	CRD	3.6.2.1D
3.7.1.1.1	CRD	3.7.1.1.1
3.7.1.2.1A	10CFR60.135(c)	3.7.1.2L
3.7.1.2.1B	10CFR60.135(b)(2)	3.7.1.2K(2)
3.7.1.2.1C	10CFR60.135(b)(1)	3.7.1.2K(1)
3.7.1.2.1D	Derived (10CFR60.135(b), 10CFR60.135(c))	3.7.1.2K, 3.7.1.2L
3.7.1.2.1.1	10CFR961.11 Article IV.B.1	3.2.1B, 3.7.1.2D
3.7.1.2.1.1.1	10CFR961.11 Appendix E.B.1 - E.B.5	Appendix A - 10CFR961
3.7.1.2.1.1.2	10CFR961.11 Appendix E.B.6	Appendix A - 10CFR961
3.7.1.2.1.1.3	10CFR961.11 Appendix E.A.1(b)	Appendix A - 10CFR961

Table 6-1. Requirements Cross-Reference by WA-SRD Paragraph (continued)

WA-SRD Paragraph	Source Document	CRD Paragraph
3.7.1.2.1.1.4A	10CFR961.11 Article IV.A.1(a)	Appendix A - 10CFR961
3.7.1.2.1.1.4B	10CFR961.11 Article VI.A.2(a)	Appendix A - 10CFR961
3.7.1.2.1.1.5A	10CFR71.87(f), 10CFR72.212(a), 10CFR961.11 Article VI.A, 10CFR961.11 Appendix E	3.2.1.1C
3.7.1.2.1.1.5B	10CFR72.122(h)(1), 10CFR72.212(b)(2)	3.2.1.1H
3.7.1.2.1.1.5C	CRD	3.2.1.1H
3.7.1.2.1.1.5D	10CFR60.135(a)(2)	Appendix A - 10CFR60
3.7.1.2.1.1.5E	10CFR60.135(a)(2)	Appendix A - 10CFR60
3.7.1.2.1.2	Derived (10CFR961.11 Appendix E.D)	Appendix A - (10CFR961)
3.7.1.2.1.2.1A	Derived (10CFR60.135(c))	3.7.1.2L
3.7.1.2.1.2.1B(1)	Derived (DOE/RW-0184)	Appendix A - (DOE/RW-0184)
3.7.1.2.1.2.1B(2)	Derived (DOE/RW-0184)	Appendix A - (DOE/RW-0184)
3.7.1.2.1.2.1B(3)	Derived (DOE/RW-0184)	Appendix A - (DOE/RW-0184)
3.7.1.2.1.2.1B(4)	Derived (DOE/RW-0184)	Appendix A - (DOE/RW-0184)
3.7.1.2.1.2.1B(5)	Derived (DOE/RW-0184)	Appendix A - (DOE/RW-0184)
3.7.1.2.1.2.1B(6)	Derived (10CFR60.135(a))	Appendix A - (10CFR60)
3.7.1.2.1.2.1B(7)	Derived (10CFR60.135(b)(3), 10CFR60.135(c)(1))	Appendix A - (10CFR60)
3.7.1.2.1.2.1B(8)	10CFR60.135(b)(4)	Appendix A - 10CFR60
3.7.1.2.1.2.2	Derived (DOE/RW-0333P)	Appendix A - (DOE/RW-0333P)

Table 6-1. Requirements Cross-Reference by WA-SRD Paragraph (continued)

WA-SRD Paragraph	Source Document	CRD Paragraph
3.7.1.2.1.2.3	Derived (10CFR961.11 Appendix E.D)	Appendix A - (10CFR961)
3.7.1.2.1.2.4	10CFR60.131(b)(7), 10CFR71.55	Appendix A - 10CFR60, 10CFR71
3.7.1.2.1.2.5	Derived (10CFR60.135(a)(1))	Appendix A - (10CFR60)
3.7.1.2.1.2.6A	Derived (10CFR60.135(a))	Appendix A - (10CFR60)
3.7.1.2.1.2.6B	Derived (10CFR60.135(a)(2))	Appendix A - (10CFR60)
3.7.1.2.1.2.7	Derived (10CFR60.135(a)(1))	Appendix A - (10CFR60)
3.7.1.2.1.2.8	Derived (10CFR60.113)	Appendix A - (10CFR60)
3.7.1.2.1.2.9A	Derived (10CFR60.135(a)(2))	Appendix A - (10CFR60)
3.7.1.2.1.2.9B	Derived (10CFR60.135(a)(2))	Appendix A - (10CFR60)
3.7.1.2.1.2.10A	Derived (10CFR71.87)	Appendix A - (10CFR71)
3.7.1.2.1.2.10B	Derived (10CFR71)	Appendix A - (10CFR71)
3.7.1.2.1.2.10C	Derived (10CFR60.135(a))	Appendix A - (10CFR60)
3.7.1.2.1.2.11A	Derived (10CFR60.135(a))	Appendix A - (10CFR60)
3.7.1.2.1.2.11B	Derived (10CFR60.135(a))	Appendix A - (10CFR60)
3.7.1.2.1.2.12	Derived (40CFR261.20 - 261.24, 40CFR261.31 - 261.33, 40CFR262)	3.3.11G
3.7.1.2.1.2.13A	Derived (10CFR60.135(a), DOE/EA-0179)	Appendix A - (10CFR60), (DOE/EA-0179)
3.7.1.2.1.2.13B	Derived (10CFR60.135(a), DOE/EA-0179)	Appendix A - (10CFR60), (DOE/EA-0179)
3.7.1.2.1.2.14	Derived (10CFR60.131(d)(2), 10CFR60.135(b)(3))	Appendix A - (10CFR60)
3.7.1.2.1.2.15	Derived (10CFR60.21(b)(3), 10CFR60.135(b)(4), DOE Order 6430.1A 1300-12.4.11)	Appendix A - (10CFR60), (DOE Order 6430.1A)

Table 6-1. Requirements Cross-Reference by WA-SRD Paragraph (continued)

WA-SRD Paragraph	Source Document	CRD Paragraph
3.7.1.2.1.2.16	Derived (10CFR60.135(a)(1), 10CFR60.135(b)(3))	Appendix A - (10CFR60)
3.7.1.2.1.2.17	Derived (DOE/RW-0184)	Appendix A - (DOE/RW-0184)
3.7.1.2.1.2.18	Derived (DOE/RW-0184)	Appendix A - (DOE/RW-0184)
3.7.1.2.1.2.19	DOE/RW-0333P	3.9A
3.7.1.2.1.2.19.1	DOE/RW-0333P	3.9A
3.7.1.2.1.2.19.2	DOE/RW-0333P	3.9A
3.7.1.2.1.2.19.3	DOE/RW-0333P	3.9A
3.7.1.2.1.2.19.4	DOE/RW-0333P	3.9A
3.7.1.2.1.20	Derived (10CFR961.11 Article IV.A.1 (a))	Appendix A - 10CFR961
3.7.1.2.2A	NWPA Sec. 302(a)(1)	3.2.1.1B, 3.7.1.2A
3.7.1.2.2B	10CFR961.11 Article IV.B.1, DOE/RW-0328P	3.2.1B, 3.7.1.2D
3.7.1.2.2C	10CFR961.11 Article V.A, 10CFR961.11 Article VI.A.1	3.7.1.2F, 3.7.1.2E
3.7.1.2.2D	10CFR961.2	Appendix A - 10CFR961
3.7.1.2.2E	10CFR961.5	Appendix A - 10CFR961
3.7.1.2.2F	10CFR961.11 Article III	Appendix A - 10CFR961
3.7.1.2.2G	NWPA Sec. 302(b)(2)	Appendix A - NWPA
3.7.1.2.2H	Presidential Memo, 1985	3.2.1.1D
3.7.1.2.3	10CFR961.11 Article IV.B.5, 10CFR961.11 Article VI.B.1	Appendix A - 10CFR961
3.7.1.2.4	10CFR961.11 Article IV.B.5	Appendix A - 10CFR961
3.7.1.2.5	10CFR961.11 Article V.D	Appendix A - 10CFR961
3.7.1.2.6A	10CFR961.11 Article V.B.1	Appendix A - 10CFR961

Table 6-1. Requirements Cross-Reference by WA-SRD Paragraph (continued)

WA-SRD Paragraph	Source Document	CRD Paragraph
3.7.1.2.6B	10CFR961.11 Article V.B.1	Appendix A - 10CFR961
3.7.1.2.6C	10CFR961.11 Article V.B.2	Appendix A - 10CFR961
3.7.1.2.6D	10CFR961.11 Article V.B.2	Appendix A - 10CFR961
3.7.1.2.6E	10CFR961.11 Article IV.A.1(c)	Appendix A - 10CFR961
3.7.1.2.7A	10CFR961.11 Article V.E	Appendix A - 10CFR961
3.7.1.2.7B	10CFR961.11 Article V.E	Appendix A - 10CFR961
3.7.1.2.8A	10CFR961.11 Article VI.A.2(b)	Appendix A - 10CFR961
3.7.1.2.8B	DOE/RW-0333P	3.9A
3.7.1.2.9A	10CFR961.11 Article V.C	Appendix A - 10CFR961
3.7.1.2.9B	10CFR961.11 Article V.C	Appendix A - 10CFR961
3.7.1.2.9C	10CFR961.11 Article V.C	Appendix A - 10CFR961
3.7.1.2.10	10CFR961.11 Article IV.A.2(b)	Appendix A - 10CFR961
3.7.1.2.11	10CFR961.11 Article V.A	3.7.1.2M
3.7.2.1.1	CRD	3.7.1.1.1
3.7.2.2A	NWPA Sec. 302(a)(4)	Appendix A - NWPA
3.7.2.2B	NWPA Sec. 302(a)(4)	Appendix A - NWPA
3.7.2.2C	NWPA Sec. 302(a)(4), 10CFR961.11 Article VIII.A.4	Appendix A - 10CFR961
3.7.2.2D	10CFR961.11 Article VIII.A.1	Appendix A - 10CFR961
3.7.2.2E	10CFR961.11 Article VIII.B	Appendix A - 10CFR961
3.7.2.2F	10CFR961.1	Appendix A - 10CFR961
3.7.3.1.1	CRD	3.7.1.1.1
3.7.3.2.1A	10CFR71.5a, 10CFR961.11 Article VI.B.2	3.2.2.7

Table 6-1. Requirements Cross-Reference by WA-SRD Paragraph (continued)

WA-SRD Paragraph	Source Document	CRD Paragraph
3.7.3.2.1B	10CFR40.13(c)(6), 10CFR71.5a, 10CFR961.11 Article VI.B.2, 10CFR961.11 Appendix E.B.6(c), 49CFR172.204(a)	3.2.2.7
3.7.3.2.1C	Derived (49CFR172.203(d)(i))	Appendix A - (49CFR172)
3.7.3.2.1D	Derived (10CFR60.135(a))	Appendix A - (10CFR60)
3.7.3.2.1E	40CFR262	3.3.11G
3.7.3.2.1F	10CFR60.135(a)	Appendix A
3.7.3.2.2	NWPA Sec. 302(b)(4)	Appendix A - NWPA
3.7.3.2.3	10CFR71.87	3.2.2.7
3.7.3.2.4A	NWPA Sec. 123, 10CFR961.11 Article I.10, 10CFR961.11 Article II	Appendix A - NWPA
3.7.3.2.4B	MOA DP/RW 1986	Appendix A - MOA DP/RW 1986
3.7.3.2.4C	10CFR961.11 Article VII	Appendix A - 10CFR961
3.7.3.2.5A	10CFR961.11 Article IV.A.2(a)	Appendix A - 10CFR961
3.7.3.2.5B	10CFR961.11 Article VI.B.2	Appendix A - 10CFR961
3.7.3.2.5C	10CFR961.11 Article VI.B.2	3.2.1.1A
3.7.3.2.6	10CFR961.11 Article VI.B.3(a), DOE/RW-0333P	Appendix A - 10CFR961, DOE/RW-0333P
3.7.3.2.7	10CFR72.78, 10CFR75.31, 10CFR75.33(a)	3.3.8.2C
3.7.3.2.8	10CFR72.76, 10CFR75.31, 10CFR75.32	3.3.8.2C
3.7.4.1.1	CRD	3.7.1.1.1
3.7.4.2.1	10CFR961.11 Article VI.B.3(b), DOE/RW-0333P	3.7.1.2G
3.7.4.2.2	10CFR961.11 Article IV.B.4	Appendix A - 10CFR961

Table 6-1. Requirements Cross-Reference by WA-SRD Paragraph (continued)

WA-SRD Paragraph	Source Document	CRD Paragraph
3.7.4.2.3	Derived (10CFR72.72(a), DOE/RW-0333P)	3.9A
3.7.4.2.4	Derived (10CFR72.72(d))	Appendix A - (10CFR72)
3.7.4.2.5	DOE Order 3790.1A (5)(b)(2)(g)(3), (DOE Order 1324.2)	Appendix A - DOE Order 3790.1A, (DOE Order 1324.2)
3.8A	CRD	3.8A
3.8B	MOA NS/RW 04/16/92	3.8B
3.9A	DOE/RW-0333P	3.9A
3.9B	DOE/RW-0333P	3.9A
3.9C	DOE/RW-0333P	3.9A
3.9D	10CFR961.11 Article VI.A.2(b), DOE/RW-0333P	3.9A
3.9E	10CFR50 Appendix B	Appendix A - 10CFR50
5.1	CRD (DOE Order 4700.1)	5.1
5.2	CRD	5.2

Table 6-2. Requirements Cross-Reference to CRD Paragraph

CRD Paragraph	WA-SRD Paragraph
3.2.1C	3.2.1.4, 3.2.1.5, 3.2.3.2.1.1B, 3.2.3.2.2B, 3.2.3.2.3B
3.2.1A	3.2.1.1A, 3.2.1.3, 3.2.3.2.2A, 3.2.3.2.2C
3.2.1B	3.2.3.2.1.1A, 3.2.3.2.2A, 3.2.3.2.3D, 3.7.1.2.1.1, 3.7.1.2.2B
3.2.1.1A	3.7.3.2.5C
3.2.1.1B	3.7.1.2.2A
3.2.1.1C	3.7.1.2.1.1.5A
3.2.1.1D	3.2.3.2.2C, 3.7.1.2.2H
3.2.1.1E	3.2.1.1D, 3.2.1.2A
3.2.1.1F	3.2.3.2.3A, 3.2.3.2.3C, 3.2.3.2.3D, 3.2.3.2.3F
3.2.1.1H	3.7.1.2.1.1.5B, 3.7.1.2.1.1.5C
3.2.2.7	3.7.3.2.1A, 3.7.3.2.1B, 3.7.3.2.3
3.2.3.2B	3.2.3.2, 3.2.3.2.4.A, 3.2.3.2.4.B, 3.7.1.1.2, 3.7.2.1.2, 3.7.3.1.2, 3.7.4.1.2
3.3.1.B	3.2.3.2.1.2A
3.3.6.1A	3.3.6
3.3.6.1B	3.3.6
3.3.7.14	3.3.7
3.3.8.1C	3.3.8.1
3.3.8.2A	3.3.8.2.1A, 3.3.8.2.1B
3.3.8.2C	3.3.8.2.1C, 3.7.3.2.7, 3.7.3.2.8
3.3.9B	3.3.9A
3.3.9C	3.3.9B
3.3.10A	3.3.10A
3.3.10B	3.3.10B

Table 6-2. Requirements Cross-Reference to CRD Paragraph (continued)

CRD Paragraph	WA-SRD Paragraph
3.3.11G	3.7.3.2.1E, 3.7.1.2.1.2.12
3.4.4	3.4.4
3.4.5	3.4.5, 3.4.8B
3.4.7	3.4.7
3.4.8	3.3.8.2.1A, 3.3.8.2.1B
3.6.2.1D	3.6.2.1
3.7.1.1.1	3.7.1.1.1, 3.7.2.1.1, 3.7.3.1.1, 3.7.4.1.1
3.7.1.2A	3.7.1.2.2A
3.7.1.2B	3.2.1.1D, 3.2.3.2.1.1C, 3.2.3.2.2D
3.7.1.2C	3.2.1.1D
3.7.1.2D	3.2.3.2.1.1A, 3.2.3.2.2A, 3.7.1.2.1.1, 3.7.1.2.2B
3.7.1.2E	3.7.1.2.2C
3.7.1.2F	3.2.3.2.3A, 3.2.3.2.3F, 3.7.1.2.2C
3.7.1.2G	3.2.3.2.1.1D, 3.2.3.2.2E, 3.7.4.2.1
3.7.1.2H - RESERVED	N/A
3.7.1.2I - RESERVED	N/A
3.7.1.2J	3.2.3.2.3A, 3.2.3.2.3C, 3.2.3.2.3D, 3.2.3.2.3F
3.7.1.2K	3.7.1.2.1D
3.7.1.2K(1)	3.7.1.2.1C
3.7.1.2K(2)	3.7.1.2.1B
3.7.1.2L	3.7.1.2.1A, 3.7.1.2.1D, 3.7.1.2.1.2.1A
3.7.1.2M	3.7.1.2.11
3.8A	3.8A
3.8B	3.8B
3.9A	3.7.1.2.1.2.19, 3.7.1.2.1.2.19.1, 3.7.1.2.1.2.19.2, 3.7.1.2.1.2.19.3, 3.7.1.2.1.2.19.4, 3.7.1.2.8B, 3.7.4.2.3, 3.9A, 3.9B, 3.9C, 3.9D

Table 6-2. Requirements Cross-Reference to CRD Paragraph (continued)

CRD Paragraph	WA-SRD Paragraph
5.1	5.1
5.2	5.2
Appendix A - 29USC651	3.3.6
Appendix A - 10CFR40	3.7.3.2.1B
Appendix A - 10CFR50	3.9E
Appendix A - 10CFR60	3.7.1.2.1.1.5D, 3.7.1.2.1.1.5E, 3.7.1.2.1.2.1B(6), 3.7.1.2.1.2.1B(7), 3.7.1.2.1.2.1B(8), 3.7.1.2.1.2.4, 3.7.1.2.1.2.5, 3.7.1.2.1.2.6A, 3.7.1.2.1.2.6B, 3.7.1.2.1.2.7, 3.7.1.2.1.2.8, 3.7.1.2.1.2.9A, 3.7.1.2.1.2.9B, 3.7.1.2.1.2.10C, 3.7.1.2.1.2.11A, 3.7.1.2.1.2.11B, 3.7.1.2.1.2.13A, 3.7.1.2.1.2.13B, 3.7.1.2.1.2.14, 3.7.1.2.1.2.15, 3.7.1.2.1.2.16, 3.7.3.2.1D, 3.7.3.2.1F
Appendix A - 10CFR71	3.2.3.2.3E, 3.7.1.2.1.2.4, 3.7.1.2.1.2.10A, 3.7.1.2.1.2.10B
Appendix A - 10CFR72	3.2.1.1C, 3.7.4.2.4
Appendix A - 10CFR75	3.3.8.2.1C, 3.7.3.2.7, 3.7.3.2.8
Appendix A - 10CFR961	3.2.3.2.1.1A, 3.7.1.2.1.1.1, 3.7.1.2.1.1.2, 3.7.1.2.1.1.3, 3.7.1.2.1.1.4A, 3.7.1.2.1.1.4B, 3.7.1.2.1.2, 3.7.1.2.1.2.3, 3.7.1.2.1.20, 3.7.1.2.2D, 3.7.1.2.2E, 3.7.1.2.2F, 3.7.1.2.3, 3.7.1.2.4, 3.7.1.2.5, 3.7.1.2.6A, 3.7.1.2.6B, 3.7.1.2.6C, 3.7.1.2.6D, 3.7.1.2.6E, 3.7.1.2.7A, 3.7.1.2.7B, 3.7.1.2.8A, 3.7.1.2.9A, 3.7.1.2.9B, 3.7.1.2.9C, 3.7.1.2.10, 3.7.2.2C, 3.7.2.2D, 3.7.2.2E, 3.7.2.2F, 3.7.3.2.4A, 3.7.3.2.4C, 3.7.3.2.5A, 3.7.3.2.5B, 3.7.3.2.6, 3.7.4.2.2
Appendix A - (40CFR261)	3.7.1.2.1.2.12
Appendix A - (40CFR262)	3.7.1.2.1.2.12
Appendix A - (49CFR172)	3.7.3.2.1C
Appendix A - (49CFR173)	3.7.3.2.1C
Appendix A - (DOE Order 1324.2)	3.7.4.2.5
Appendix A - DOE Order 3790.1A	3.7.4.2.5

Table 6-2. Requirements Cross-Reference to CRD Paragraph (continued)

CRD Paragraph	WA-SRD Paragraph
Appendix A - (DOE Order 4700.1)	5.1
Appendix A - (DOE Order 6430.1A)	3.7.1.2.1.2.15
Appendix A - (DOE/EA-0179)	3.7.1.2.1.2.13A, 3.7.1.2.1.2.13B
Appendix A - DOE/RW-0005	3.2.3.2.3A(1)
Appendix A - (DOE/RW-0184)	3.7.1.2.1.2.1B(1), 3.7.1.2.1.2.1B(2), 3.7.1.2.1.2.1B(3), 3.7.1.2.1.2.1B(4), 3.7.1.2.1.2.1B(5), 3.7.1.2.1.2.17, 3.7.1.2.1.2.18
Appendix A - (DOE/RW-0187)	3.2.3.2.3A(2), 3.2.3.2.3A(3)
Appendix A - DOE/RW-0194P	3.4.8A
Appendix A - DOE/RW-0333P	3.4.8A, 3.7.1.2.1.2.2, 3.7.3.2.6
Appendix A - (DOE/RW-0270P)	3.2.3.2.3A(2), 3.2.3.2.3A(3)
Appendix A - DOE/RW-0316P	3.2.1.5, 3.2.3.2.2B, 3.2.3.2.3B
Appendix A - DOE/RW-0328P	3.7.1.2.2B
Appendix A - DOE/RW-0412	3.2.1.5, 3.2.3.2.1.1B, 3.2.3.2.2B, 3.2.3.2.3B
Appendix A - MOA DP/RW 1986	3.7.3.2.4B
Appendix A - MOA NS/RW 04/16/92	3.8B
Appendix A - (MTR 10090)	3.3.7
Appendix A - NWPA	3.2.1.1B, 3.2.1.2, 3.7.1.2.2G, 3.7.2.2A, 3.7.2.2B, 3.7.2.2C, 3.7.3.2.2, 3.7.3.2.4A
Appendix A - ORNL/Sub/89-SD841/2	3.2.1.5, 3.2.3.2.2B, 3.2.3.2.3B
Appendix A - Presidential Memo, 1985	3.7.1.2.2H
Appendix A - (WSRC-TR-90-539)	3.7.1.2.1.2.13
Appendix A - A00000000-01717-6700-00001	3.2.1.4
Appendix A - A00000000-01717-2200-00001	3.2.1.5, 3.2.3.2.1.1B, 3.2.3.2.2B, 3.2.3.2.3B

Table 6-3. Requirements Cross-Reference by Source Document

Source Document	WA-SRD Paragraph
10CFR40.13(c)(6)	3.7.3.2.1B
10CFR50 Appendix B	3.9E
10CFR60.131(b)(7)	3.7.1.2.1.2.4
10CFR60.135(a)(2)	3.7.1.2.1.1.5D, 3.7.1.2.1.1.5E
10CFR60.135(b)(1)	3.7.1.2.1C
10CFR60.135(b)(2)	3.7.1.2.1B
10CFR60.135(b)(4)	3.7.1.2.1.2.1B(8)
10CFR60.135(c)	3.7.1.2.1A
10CFR71.43(b)	3.2.3.2.3E
10CFR71.5a	3.7.3.2.1A, 3.7.3.2.1B
10CFR71.55	3.7.1.2.1.2.4
10CFR71.87(f)	3.7.1.2.1.1.5A
10CFR71.87	3.7.3.2.3
10CFR72.44(g)	3.2.1.1C
10CFR72.76	3.7.3.2.8
10CFR72.78	3.7.3.2.7
10CFR72.122(h)(1)	3.7.1.2.1.1.5B
10CFR72.212(a)	3.7.1.2.1.1.5A
10CFR72.212(b)(2)	3.7.1.2.1.1.5B
10CFR72.212(b)(3)	3.2.3.2.1.2A
10CFR75.1	3.3.8.2.1C
10CFR75.31	3.7.3.2.7, 3.7.3.2.8
10CFR75.32	3.7.3.2.8
10CFR75.33(a)	3.7.3.2.7
10CFR961.1	3.7.2.2F

Table 6-3. Requirements Cross-Reference by Source Document (continued)

Source Document	WA-SRD Paragraph
10CFR961.2	3.7.1.2.2D
10CFR961.5	3.7.1.2.2E
10CFR961.11 Article I.10	3.7.3.2.4A
10CFR961.11 Article II	3.2.1.1D, 3.7.3.2.4A
10CFR961.11 Article III	3.7.1.2.2F
10CFR961.11 Article IV.A.1(a)	3.7.1.2.1.1.4A
10CFR961.11 Article IV.A.1(c)	3.7.1.2.6E
10CFR961.11 Article IV.A.2(a)	3.7.3.2.5A
10CFR961.11 Article IV.A.2(b)	3.7.1.2.10
10CFR961.11 Article IV.B.1	3.7.1.2.1.1, 3.7.1.2.2B
10CFR961.11 Article IV.B.2	3.2.3.2.3A, 3.2.3.2.3F
10CFR961.11 Article IV.B.4	3.7.4.2.2
10CFR961.11 Article IV.B.5	3.7.1.2.4, 3.7.1.2.3
10CFR961.11 Article V.A	3.7.1.2.2C, 3.7.1.2.11
10CFR961.11 Article V.B.1	3.7.1.2.6A, 3.7.1.2.6B
10CFR961.11 Article V.B.2	3.7.1.2.6C, 3.7.1.2.6D
10CFR961.11 Article V.C	3.7.1.2.9A, 3.7.1.2.9B, 3.7.1.2.9C
10CFR961.11 Article V.D	3.7.1.2.5
10CFR961.11 Article V.E	3.7.1.2.7A, 3.7.1.2.7B
10CFR961.11 Article VI.A	3.7.1.2.1.1.5A
10CFR961.11 Article VI.A.1	3.7.1.2.2C
10CFR961.11 Article VI.A.2(a)	3.7.1.2.1.1.4B
10CFR961.11 Article VI.A.2(b)	3.7.1.2.8A, 3.9D
10CFR961.11 Article VI.B.1	3.7.1.2.3
10CFR961.11 Article VI.B.2	3.7.3.2.1A, 3.7.3.2.1B, 3.7.3.2.5B, 3.7.3.2.5C
10CFR961.11 Article VI.B.3(a)	3.7.3.2.6

Table 6-3. Requirements Cross-Reference by Source Document (continued)

Source Document	WA-SRD Paragraph
10CFR961.11 Article VI.B.3(b)	3.2.3.2.1.1D, 3.2.3.2.2E, 3.7.4.2.1
10CFR961.11 Article VII	3.7.3.2.4C
10CFR961.11 Article VIII.A.1	3.7.2.2D
10CFR961.11 Article VIII.A.4	3.7.2.2C
10CFR961.11 Article VIII.B	3.7.2.2E
10CFR961.11 Appendix E.A.1(b)	3.7.1.2.1.1.3
10CFR961.11 Appendix E.B.1 - E.B.5	3.7.1.2.1.1.1
10CFR961.11 Appendix E.B.6	3.7.1.2.1.1.2
10CFR961.11 Appendix E.B.6(c)	3.7.3.2.1B
29USC651 et seq., (654 (a) - (b))	3.3.6
(40CFR261.20 - 261.24, 40CFR261.31 - 261.33, 40CFR262)	3.7.1.2.1.2.12
40CFR262	3.7.3.2.1E
49CFR172.204(a)	3.7.3.2.1B
(49CFR173.435)	3.7.3.2.1C
CRD	3.3.7, 3.3.8.1, 3.3.8.2.1A, 3.3.8.2.1B, 3.3.9A, 3.3.9B, 3.3.10A, 3.3.10B, 3.4.4, 3.4.5, 3.6.2.1, 3.7.1.1.1, 3.7.1.2.1.1.5C, 3.7.2.1.1, 3.7.3.1.1, 3.7.3.2.5C, 3.7.4.1.1, 3.8A, 5.1, 5.2
A00000000-01717-2200-00001	3.2.1.5, 3.2.3.2.1.1B, 3.2.3.2.2B, 3.2.3.2.3B
A00000000-01717-6700-00001	3.2.1.4
(DOE Order 1324.2)	3.7.4.2.5
DOE Order 3790.1A (5)(b)(2)(g)(3)	3.7.4.2.5
DOE Order 4700.1 Ch III.B.2.c(2)(c)	3.2.3.2.4.A, 3.2.3.2.4.B
(DOE Order 4700.1)	5.1
DOE/RW-0005	3.2.3.2.3A(1)
DOE/RW-0194P Sections 6.1, 6.3, & 6.4	3.4.8A

Table 6-3. Requirements Cross-Reference by Source Document (continued)

Source Document	WA-SRD Paragraph
DOE/RW-0333P	3.4.7, 3.4.8A, 3.4.8B, 3.7.1.2.8B, 3.7.1.2.1.2.19, 3.7.1.2.1.2.19.1, 3.7.1.2.1.2.19.2, 3.7.1.2.1.2.19.3, 3.7.1.2.1.2.19.4, 3.7.3.2.6, 3.7.4.2.1, 3.9A, 3.9B, 3.9C, 3.9D
DOE/RW-0316P	3.2.1.5, 3.2.3.2.2B, 3.2.3.2.3B
DOE/RW-0328P	3.7.1.2.2B
DOE/RW-0412	3.2.1.5, 3.2.3.2.1.1B, 3.2.3.2.2B, 3.2.3.2.3B
MOA DP/RW 1986	3.7.3.2.4B
MOA NS/RW 04/16/92	3.8B
(MTR 10090)	3.3.7
NWPA Sec. 111(a)(4)	3.2.1.1A
NWPA Sec. 111(a)(5)	3.2.1.2
NWPA Sec. 114(d)	3.2.1.1B
NWPA Sec. 123	3.7.3.2.4A
NWPA Sec. 302(a)(1)	3.7.1.2.2A
NWPA Sec. 302(a)(4)	3.7.2.2A, 3.7.2.2B, 3.7.2.2C
NWPA Sec. 302(a)(5)	3.2.1.1D, 3.2.3.2.1.1C
NWPA Sec. 302(b)(2)	3.7.1.2.2G
NWPA Sec. 302(b)(4)	3.7.3.2.2
ORNL/Sub/89-SD841/2	3.2.1.5, 3.2.3.2.2B, 3.2.3.2.3B
Presidential Memo, 1985	3.7.1.2.2H
Derived (10CFR60.21(b)(3))	3.7.1.2.1.2.15
Derived (10CFR60.113)	3.7.1.2.1.2.8
Derived (10CFR60.131(d)(2))	3.7.1.2.1.2.14
Derived (10CFR60.135(a))	3.7.1.2.1.2.1B(6), 3.7.1.2.1.2.6A, 3.7.1.2.1.2.10C, 3.7.1.2.1.2.11A, 3.7.1.2.1.2.11B, 3.7.1.2.1.2.13A, 3.7.1.2.1.2.13B, 3.7.3.2.1D
Derived (10CFR60.135(a)(1))	3.7.1.2.1.2.5, 3.7.1.2.1.2.7, 3.7.1.2.1.2.16
Derived (10CFR60.135(a)(2))	3.7.1.2.1.2.6B, 3.7.1.2.1.2.9A, 3.7.1.2.1.2.9B

Table 6-3. Requirements Cross-Reference by Source Document (continued)

Source Document	WA-SRD Paragraph
Derived (10CFR60.135(b))	3.7.1.2.1D
Derived (10CFR60.135(b)(3))	3.7.1.2.1.2.1B(7), 3.7.1.2.1.2.14, 3.7.1.2.1.2.16
Derived (10CFR60.135(b)(4))	3.7.1.2.1.2.15
Derived (10CFR60.135(c))	3.7.1.2.1D, 3.7.1.2.1.2.1A
Derived (10CFR60.135(c)(1))	3.7.1.2.1.2.1B(7)
Derived (10CFR71)	3.7.1.2.1.2.10B
Derived (10CFR71.87)	3.7.1.2.1.2.10A
Derived (10CFR72.72(a))	3.7.4.2.3
Derived (10CFR72.72(d))	3.7.4.2.4
Derived (10CFR961.11 Article IV.A.1(a))	3.7.1.2.1.20
Derived (10CFR961.11 Article IV.B.1)	3.2.3.2.1.1A, 3.2.3.2.2A
Derived (10CFR961.11 Article IV.B.2)	3.2.3.2.3C, 3.2.3.2.3D
Derived (10CFR961.11 Appendix E.D)	3.7.1.2.1.2, 3.7.1.2.1.2.3
Derived (40CFR261.20 - 261.24, 40CFR261.31 - 261.33, 40CFR262)	3.7.1.2.1.2.12
Derived (49CFR172.203(d)(i))	3.7.3.2.1C
Derived (DOE Order 6430.1A)	3.7.1.2.1.2.15
Derived (DOE/EA-0179)	3.7.1.2.1.2.13A, 3.7.1.2.1.2.13B
Derived (DOE/RW-0184)	3.7.1.2.1.2.1B(1), 3.7.1.2.1.2.1B(2), 3.7.1.2.1.2.1B(3), 3.7.1.2.1.2.1B(4), 3.7.1.2.1.2.1B(5), 3.7.1.2.1.2.17, 3.7.1.2.1.2.18
Derived (DOE/RW-0187)	3.2.3.2.3A(2), 3.2.3.2.3A(3)
Derived (DOE/RW-0333P)	3.7.1.2.1.2.2, 3.7.4.2.3
Derived (DOE/RW-0270P)	3.2.3.2.3A(2), 3.2.3.2.3A(3)
Derived (DOE/RW-0316P)	3.2.1.3, 3.2.3.2.2C
Derived (NWPA Sec. 111(a)(4))	3.2.1.3, 3.2.3.2.2A
Derived (NWPA Sec. 302(a)(5))	3.2.3.2.2D

INTENTIONALLY LEFT BLANK

APPENDIX A WA Function Descriptions

1.1 Accept Waste

The Accept Waste function establishes the criteria for acceptable waste, establishes and maintains contracts/agreements with Purchasers/Producers, collects fees, develops the plan for waste pickup, observes waste preparations, transfers the custody of the waste, resolves discrepancies in the waste description, and maintains material control and accountability of waste accepted into the CRWMS.

The transfer of custody (including title), f.o.b. carrier, of spent nuclear fuel (SNF) or high-level radioactive waste (HLW)[1] from all Purchasers/Producers (who have executed a contract or an agreement with OCRWM) to OCRWM occurs at the Purchaser/Producer civilian nuclear power reactor or other domestic sites as may be designated by the Purchaser/Producer and approved by OCRWM. [10CFR961.11 Article I, Definitions - Expanded]

Inputs:	From:
• Plans, Data, Contract/Agreement	Purchaser/Producer
• SNF Documentation	Purchaser
• HLW Documentation	Producer
• Loaded Transportation Cask Subsystems	Purchaser/Producer
• Unloaded Transportation Cask Subsystems	1.2
• Shipping Documents	1.2
• Ancillary Equipment	1.2

Outputs:	To:
• Loaded Transportation Cask Subsystems	1.2
• SNF Documentation	1.2, 1.3, 1.4
• HLW Documentation	1.2, 1.3, 1.4
• Documentation	1.2
• Information	1.2
• Unloaded Transportation Cask Subsystems	Purchaser/Producer
• Reports	Purchaser/Producer
• Contracts/Agreements	Purchaser/Producer

1.1.1 Define Waste Acceptance Criteria

Determine the conditions necessary to be met by the SNF/HLW, in order for DOE to be able to accept it for disposal including defining standard and nonstandard waste forms.

[1]Note that the 10CFR60 definition of HLW includes SNF.

Inputs:	From:
• Waste Characteristics	1.1.2
• RW-859 Data	1.1.3
• 10CFR961	1.1.2
• Waste Form Compliance Plan	1.1.3
• Waste Form Qualification Report	1.1.3

Outputs:	To:
• Waste Acceptance Criteria	1.1.2

1.1.2 Establish Contracts/Agreements

Develop, execute, and maintain written agreements between DOE and Purchasers/Producers that include terms, conditions, and criteria for waste acceptance and related services, and responsibilities of each party.

Inputs:	From:
• Waste Characteristics	Purchaser/Producer
• Waste Acceptance Criteria	1.1.1

Outputs:	To:
• Waste Characteristics	1.1.1
• Contract/Agreement	1.1.3 Purchaser/Producer/DOE/OCRWM
• 10CFR961	1.1.1 / 1.1.3

1.1.3 Plan for Waste Acceptance

Establish and provide the data on spent nuclear fuel and high-level waste characteristics and the Purchaser/Producer site capabilities and requirements, as well as the CRWMS capabilities and requirements. Sub-functions include: Allocate Waste System Capacity; Identify Waste Locations/Characteristics; and Define Site Interface Capabilities.

Inputs:	From:
• RW-859 Data	Purchaser
• Waste Form Compliance Plan	Producer
• Waste Form Qualification Report	Producer
• Production Records	Producer
• 10CFR961 Appendix A, B, C, D, E, F, G	Purchaser
• Schedules, Plans	1.2
• DCS	Purchaser
• FDS	Purchaser

• DCS Exchange Requests	Purchaser/Producer
• Requests for Nonstandard Waste Delivery	Purchaser/Producer
• Services Planning Documents	Purchaser/Producer / 1.2
• Site-Specific Servicing Plans	Purchaser/Producer / 1.2
• FICA	1.2

Outputs:	To:
• Approved DCS	Purchaser / 1.1.4 / 1.2 / 1.3 / 1.4
• Approved FDS	1.1.4 / 1.2 / 1.3 / 1.4
• RW-859 Data	1.1.1 / 1.1.8
• Production Records	1.1.4 / 1.2 /1.4
• Waste Form Compliance Plan	1.1.1
• Waste Form Qualification Report	1.1.1
• Services Planning Documents	Purchaser/Producer / 1.2
• Site-Specific Servicing Plans	Purchaser/Producer / 1.2
• 10CFR961 Appendix F	1.1.8
• Information	1.1.8

1.1.3.1 Allocate Waste System Capacity

Using the priority ranking of Purchasers/Producers, distribute projected throughput capability (based on total CRWMS capacity) among each Purchaser/Producer for ten years of operation.

Inputs:	From:
• RW-859 Data	Purchaser
• Waste Form Compliance Plan	Producer
• Waste Form Qualification Report	Producer
• Waste Acceptance Rate	1.2 / 1.3 / 1.4
• APR	1.2 / 1.3 / 1.4
• 10CFR961 Appendix B, C, D, F, G	1.1.3.2

Outputs:	To:
• RW-859 Data	1.1.1 / 1.1.8
• ACR	1.1.3.2
• Waste Form Compliance Plan	1.1.3.2
• Waste Form Qualification Report	1.1.3.2

1.1.3.1.1 Collect Waste Data

Establish and provide the information on the Purchaser/Producer SNF/HLW that is necessary for CRWMS planning and design.

Inputs:	From:
• RW-859 Data	Purchaser
• Waste Form Compliance Plan	Producer
• Waste Form Qualification Report	Producer
• Other SNF Data	Purchaser
• 10CFR961 Appendix B, C, D, F, G	1.1.3.2

Outputs:	To:
• Waste Data	1.1.3.1.2
• RW-859 Data	1.1.1 / 1.1.3.1.2

1.1.3.1.2 Rank/Order Waste

Establish and maintain a priority ranking for acceptance of waste into the CRWMS. The priority ranking is based on the date the SNF was permanently discharged, with the Purchasers with the oldest SNF, on an industry-wide basis, given the highest priority. The acceptance priority accrues to the Purchaser. Producer priority ranking will be established by a method yet to be determined.

Inputs:	From:
• Waste Data	1.1.3.1.1
• RW-859 Data	1.1.3.1.1

Outputs:	To:
• APR	1.1.3.1.3

1.1.3.1.3 Allocate Annual Capacity to Purchasers/Producers

Allocate acceptance capacity among Purchasers/Producers according to CRWMS annual waste acceptance rate and APR.

Inputs:	From:
• APR	1.1.3.1.2
• Waste Acceptance Rate	1.2 / 1.3 / 1.4

Outputs:	To:
• ACR	Purchaser / 1.1.3.2

1.1.3.2 Identify Waste Locations/Characteristics

Evaluate Purchaser/Producer proposed waste locations and characteristics.

Inputs:	From:
• ACR	1.1.3.1
• Waste Form Compliance Plan	1.1.3.1
• Waste Form Qualification Report	1.1.3.1
• Submitted DCS	Purchaser
• Submitted FDS	Purchaser
• 10CFR961 Appendix A, B, C, D, E, F, G	Purchaser
• Submitted DCS Exchange Requests	Purchaser
• Request for Nonstandard Waste Delivery	Purchaser/Producer
• Production Records	Producer

Outputs:	To:
• Approved DCS	1.1.3.3 / Purchaser / 1.2 / 1.3 / 1.4
• Approved FDS	Purchaser / 1.1.4 / 1.2 / 1.3 / 1.4
• Production Records	1.1.4 / 1.2 / 1.4
• 10CFR961 Appendix B	1.1.3.1 / 1.1.4
• 10CFR961 Appendix C, D, F, G	1.1.3.1
• Information	1.1.8

1.1.3.2.1 Evaluate Delivery Commitment Schedule

Determine the feasibility of waste acceptance as proposed by the Purchaser/Producer on the submitted forms as it corresponds to their allocation, site capabilities, and minimum acceptance requirements.

Inputs:	From:
• Submitted DCS	Purchaser
• Evaluation Support	1.2

Outputs:	To:
• Approved DCS	Purchaser / 1.2 / 1.3 / 1.4 / 1.1.3.2.2
• Disapproved DCS	Purchaser
• Evaluation Request	1.2

1.1.3.2.2 Evaluate DCS Exchange Requests

Determine the feasibility of exchanging approved DCSs.

Inputs:	From:
• Submitted DCS Exchange Request	Purchaser
• Evaluation Support	1.2

Outputs:	To:
• Approved DCS Exchange Request	Purchaser/ 1.2 / 1.3 / 1.4
• Disapproved DCS Exchange Request	Purchaser
• Evaluation Request	1.2

1.1.3.2.3 Evaluate Request for Nonstandard Waste Delivery

Determine the feasibility of accommodating suggested acceptance procedures for SNF/HLW that is other than standard waste.

Inputs:	From:
• Request for Nonstandard Waste Delivery	Purchaser/Producer
• Evaluation Support	1.2

Outputs:	To:
• Approved Request for Nonstandard Waste Delivery	Purchaser/Producer 1.2 / 1.3 / 1.4
• Disapproved Request for Nonstandard Waste Delivery	Purchaser/Producer
• Evaluation Request	1.2

1.1.3.2.4 Evaluate Final Delivery Schedule

Determine the feasibility of accepting described waste on the proposed schedule.

Inputs:	From:
• Submitted FDS	Purchaser
• Evaluation Support	1.2

Outputs:	To:
• Approved FDS	Purchaser / 1.2 / 1.3 / 1.4
• Disapproved FDS	Purchaser
• Evaluation Request	1.2

1.1.3.3 Define Site Interface Capabilities

Determine the interface capabilities at each Purchaser/Producer site to ensure that they can be accommodated by the CRWMS equipment and facilities.

Inputs:	From:
• FICA	1.2
• Approved DCS	1.1.3.2
• Draft Services Planning Documents	1.2
• Services Planning Documents Approval/Comments	Purchaser/Producer
• Draft Site-Specific Servicing Plans	1.2
• Site-Specific Servicing Plans Approval/Comments	Purchaser/Producer

Outputs:	To:
• Draft Services Planning Documents for Review/Approval	Purchaser/Producer
• Services Planning Documents Approval/Comments	1.2
• Draft Site-Specific Servicing Plans for Review/Approval	Purchaser/Producer
• Site-Specific Servicing Plans Approval/Comments	1.2

1.1.4 Observe Waste Preparations

Verify the identified waste to be delivered is in agreement with its corresponding documentation. Verification may be accomplished by certification by the Purchaser/Producer and/or by independent direct methods including observation by DOE representatives.

Inputs:	From:
• SNF	Purchaser
• HLW	Producer
• FDS	1.1.3
• 10CFR961 Appendix F	1.1.3
• Production Records	1.1.3

• Unloaded Transportation Cask Subsystems	1.2
• Empty MPC	1.2

Outputs:	To:
• Documentation, Findings	1.1.5
• Notification of Discrepancy	Purchaser/Producer
• Proposed Resolution	Purchaser/Producer
• SNF/HLW Documentation	1.1.5
• Loaded Transportation Cask Subsystems	1.1.5
• Loaded MPC	1.1.5

1.1.4.1 Observe Preliminary Waste Preparations

Observe the activities of getting the SNF/HLW ready for acceptance (including review of techniques used to classify the waste) to ensure that it is appropriate to the transportation cask subsystem (including MPC), storage facility and repository provided by the CRWMS.

Inputs:	From:
• Information	Purchaser/Producer

Outputs:	To:
• Verified Documentation, Findings	1.1.4.2

1.1.4.2 Verify Waste Description

Verify that the contents being placed into the MPC (if required) and the transportation cask correspond to those described in the submitted documentation.

Inputs:	From:
• FDS	1.1.3
• Verified Documentation, Findings	1.1.4.1
• Information	Purchaser/Producer

Outputs:	To:
• Verified Documentation, Findings	1.1.4.3 / 1.1.5

1.1.4.3 Notify Purchaser/Producer of Improperly Described Waste

Prior to DOE/OCRWM taking title to the waste, resolve any identified discrepancy between the description of the waste provided in documentation and the actual contents of the transportation cask with the Purchaser/Producer.

Inputs:	From:
• Verified Documentation, Findings	1.1.4.2

Outputs:	To:
• Notification of Discrepancy	Purchaser/Producer
• Proposed Resolution	Purchaser/Producer

1.1.5 Accept Waste Title/Documentation

Transfer documents between DOE and the Purchaser/Producer at the time of acceptance. Documents include certification of cask transportation readiness. Confirm completeness and compliance, accept title to waste, and turn over to Transportation for off-site removal.

Inputs:	From:
• Documentation, Findings	1.1.4
• Title	Purchaser/Producer
• Documentation	Purchaser/Producer
• SNF/HLW Documentation	1.1.4
• Loaded Transportation Cask Subsystems	1.1.4
• Loaded MPC	1.1.4
• DOE/NRC Forms-741 & 742	Purchaser
• Resolved Waste Description	1.1.6

Outputs:	To:
• Title	DOE/OCRWM
• Documentation	DOE/OCRWM / 1.1.6 / 1.2
• SNF Documentation	1.3 / 1.4
• HLW Documentation	1.4
• Loaded Transportation Cask Subsystems	1.2
• Loaded MPC	1.2
• DOE/NRC Forms-741 & 742	1.1.8

1.1.6 Resolve Improperly Described Waste

When a discrepancy is found with the waste after DOE/OCRWM has taken title to it, make arrangements with the Purchaser/Producer to correct the waste description.

Inputs:	From:
• Waste Description	1.3 / 1.4
• Resolved Waste Description	Purchaser/Producer
• DOE/NRC Forms-741 & 742	Purchaser

Outputs:	To:
• Notification of Proposed Resolution	Purchaser/Producer
• Resolved Waste Description	1.1.5 / 1.3 / 1.4
• DOE/NRC Forms-741 & 742	1.1.8

1.1.7 Support Fee Collection

Collect, verify, and assess the adequacy of fees paid into the Nuclear Waste Fund (NWF) and recommend adjustment of the fee, if necessary, in order to ensure full cost recovery. Fees for waste disposal services will be paid by the Purchasers/Producers. DOE will regularly review and verify the accuracy of all fees paid into the NWF.

Inputs:	From:
• Fees	Purchaser/Producer
• OCRWM Program Cost Estimates	DOE

Outputs:	To:
• Fees	Nuclear Waste Fund
• Fee Adequacy Assessment	DOE Secretary
• Payment Received Notification	1.1.3

1.1.8 Control and Account for Waste Inventory

Control, account for, and track the SNF and HLW inventory after it is accepted into the CRWMS and feed all systems that similarly track material control and accountability (MC&A) data records. Additionally, the SNF and HLW will be tracked prior to acceptance into the CRWMS.

Inputs:	From:
• 10CFR961 Appendix F	1.1.3
• RW-859 Data	1.1.3
• FDS	1.1.3
• SNF Specifications	1.1.3
• Production Records	1.1.3
• DOE/NRC Forms-741 & 742	1.1.5 / 1.1.6 / 1.2 / 1.3 / 1.4
• Information	1.1.3

Outputs:	To:
• Information	Purchaser / Producer / NRC / IAEA 1.2 / 1.3 / 1.4

1.1.8.1 Perform Inventory Control

Control inventory of SNF and HLW within the CRWMS.

Inputs:	From:
• 10CFR961 Appendix F	1.1.3
• FDS	1.1.3
• SNF Specifications	1.1.3
• Production Records	1.1.3
• DOE/NRC Forms-741 & 742	1.1.5 / 1.1.6 / 1.2 / 1.3 / 1.4

Outputs:	To:
• Information	Purchaser / Producer / NRC / IAEA 1.2 / 1.3 / 1.4

1.1.8.2 Provide Accountability

Account for the location of SNF and HLW within the CRWMS. The accountability function will include conducting periodic physical verification of materials, validating and reconciling accounting ledger data of materials in inventory prior to disposal, and supporting the maintenance of MC&A records after final disposal.

Inputs:	From:
• 10CFR961 Appendix F	1.1.3
• FDS	1.1.3
• SNF Specifications	1.1.3
• Production Records	1.1.3
• DOE/NRC Forms-741 & 742	1.1.5 / 1.1.6 / 1.2 / 1.3 / 1.4

Outputs:	To:
• Information	Purchaser / Producer / NRC / IAEA 1.2 / 1.3 / 1.4

1.1.8.3 Provide Material Tracking

Track the location of SNF and HLW prior to and after acceptance into the CRWMS.

Inputs:	From:
• 10CFR961 Appendix F	1.1.3
• RW-859 Data	1.1.3
• FDS	1.1.3
• SNF Specifications	1.1.3

• Production Records	1.1.3
• DOE/NRC Forms-741 & 742	1.1.5 / 1.1.6 / 1.2 / 1.3 / 1.4
• Information	1.1.3

Outputs:	To:
• Information	Purchaser / Producer / NRC / IAEA 1.2 / 1.3 / 1.4

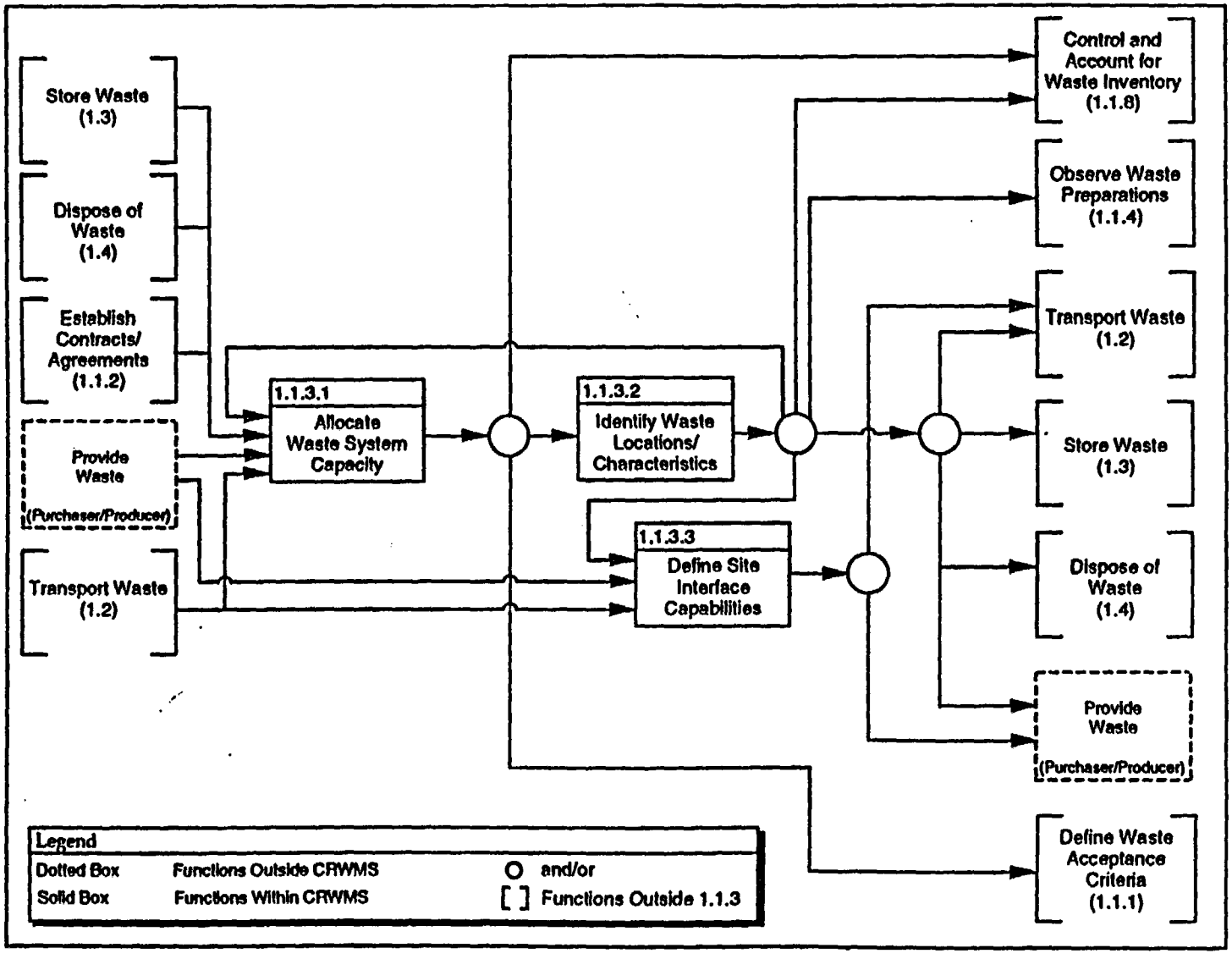

Figure A-1. 1.1.3 Plan for Waste Acceptance Function Flow Diagram

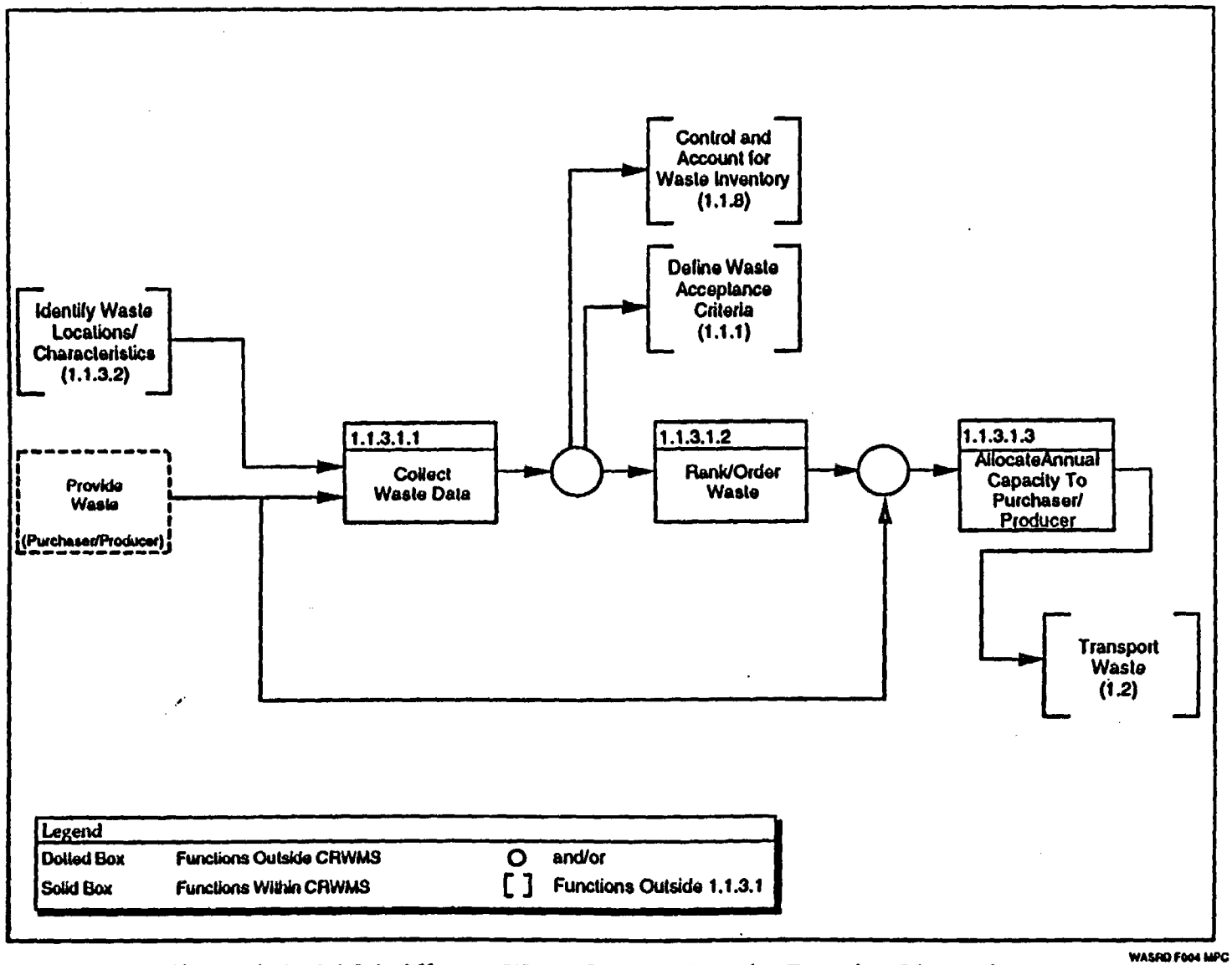

Figure A-2. 1.1.3.1 Allocate Waste System Capacity Function Flow Diagram

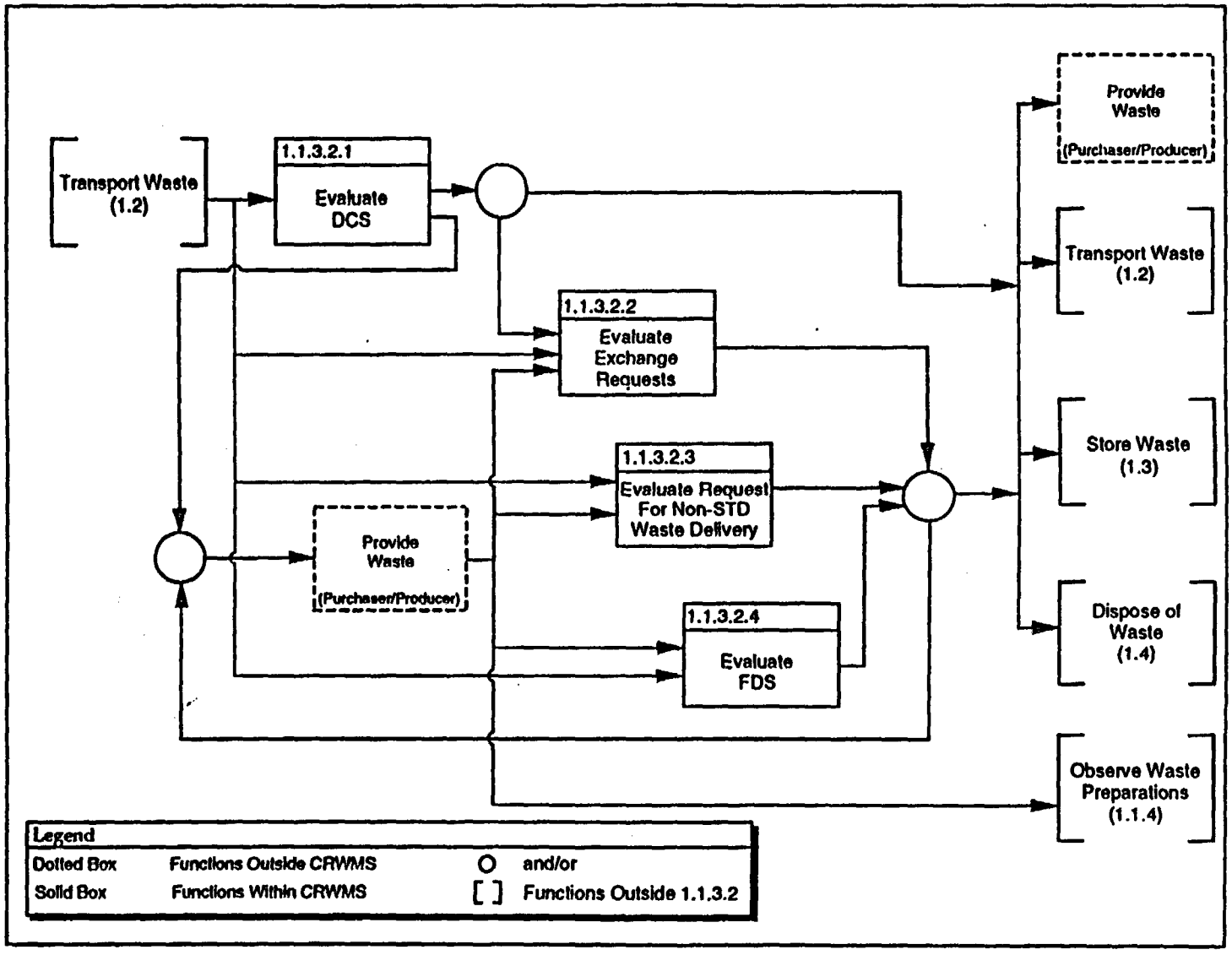

WASRD F005 MPC

Figure A-3. 1.1.3.2 Identify Waste Locations/Characteristics Function Flow Diagram

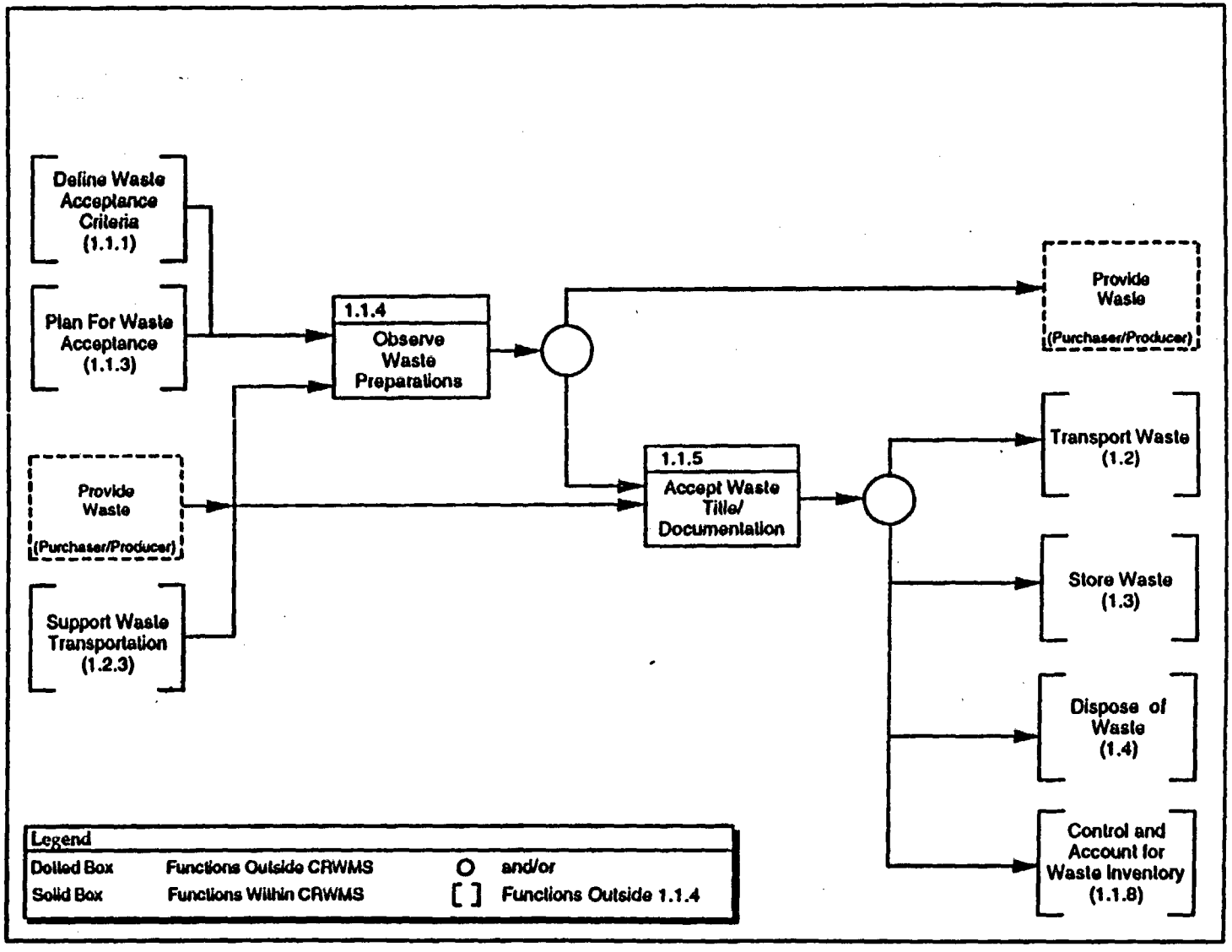

WASRD.F006 MPC

Figure A-4. Accept Waste Custody Function Flow Diagram

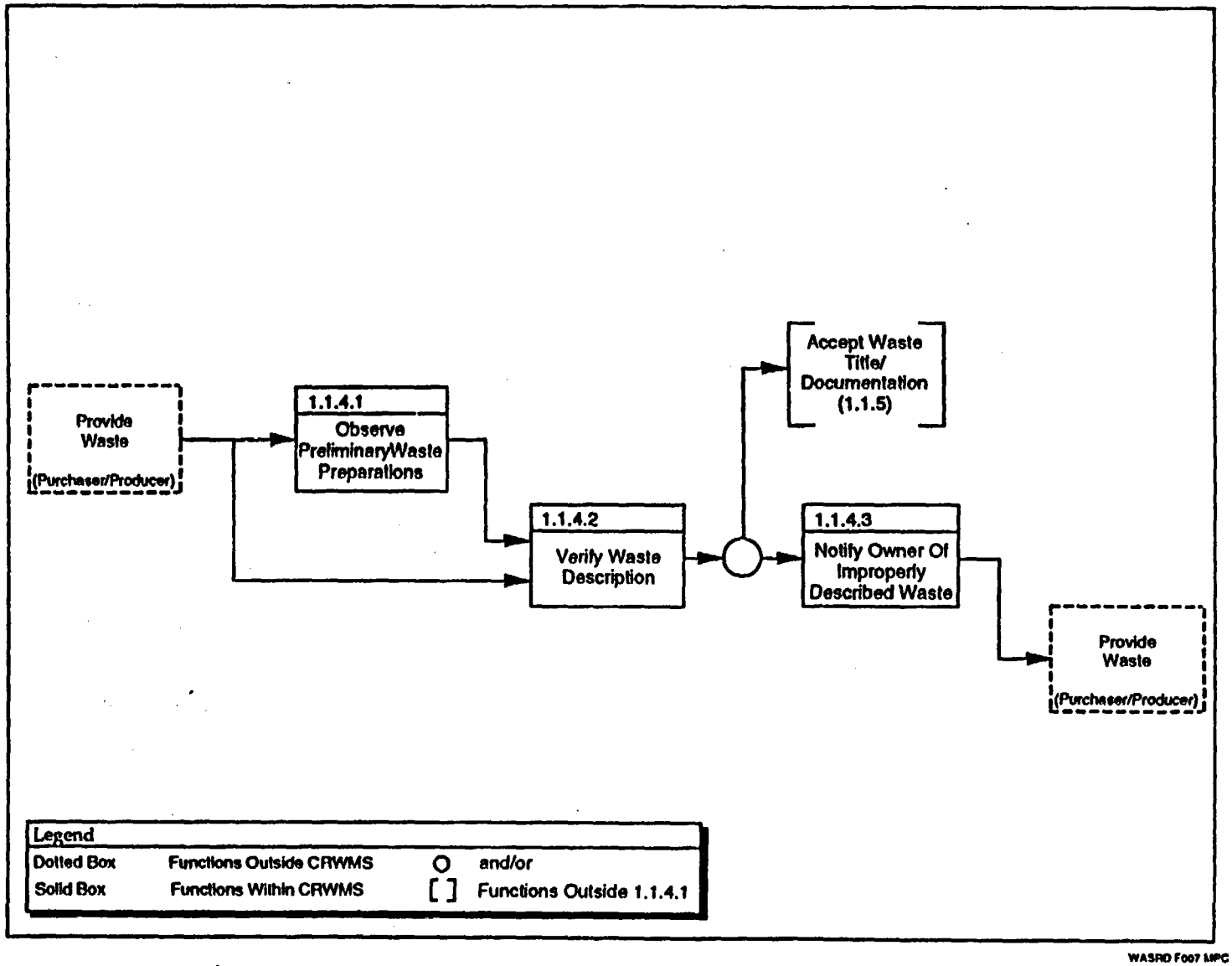

WASRD F007 MPC

Figure A-5. 1.1.4 Observe Waste Preparations Functional Flow Diagram

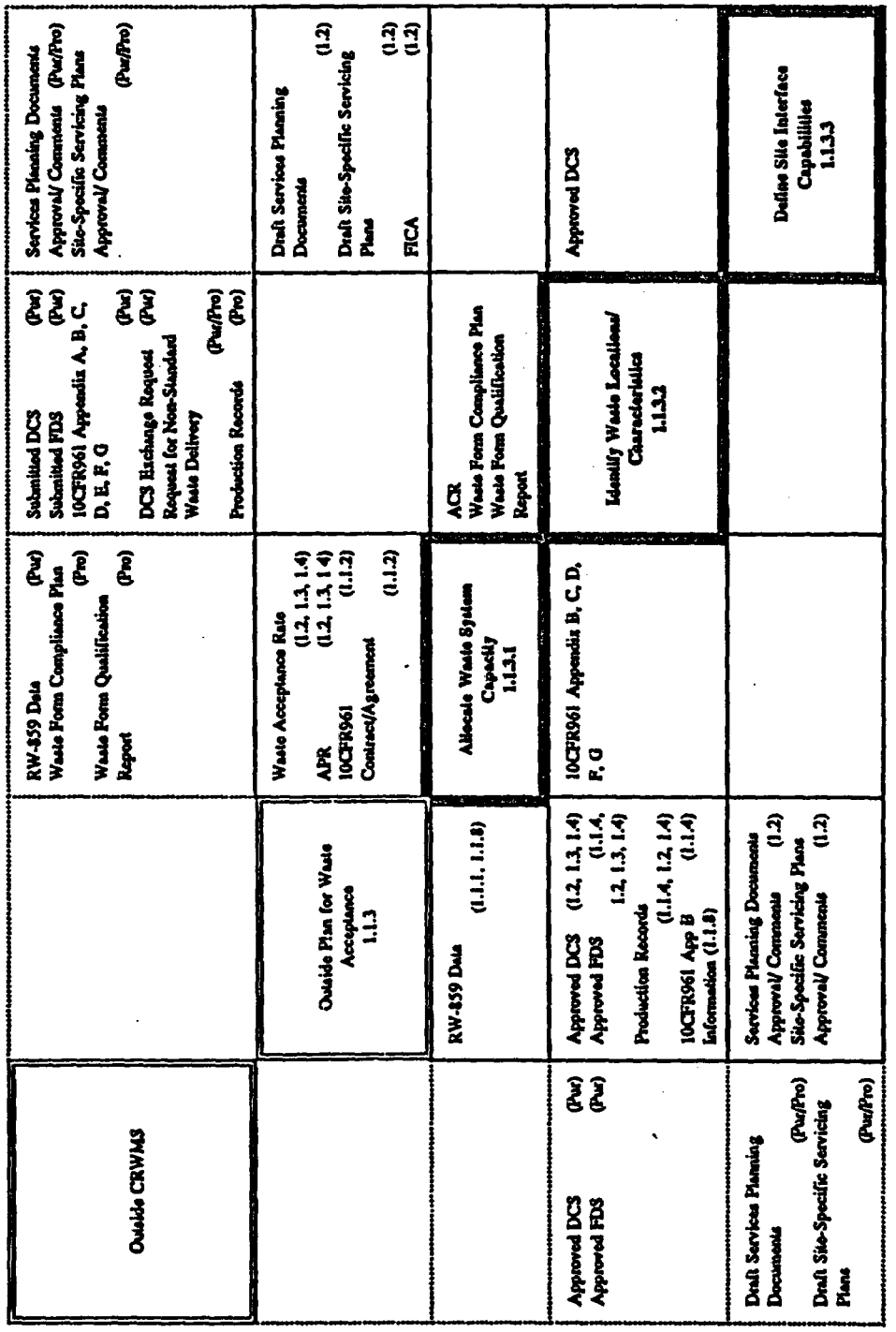

Figure A-6. N-Square Chart for 1.1.3 Plan for Waste Acceptance

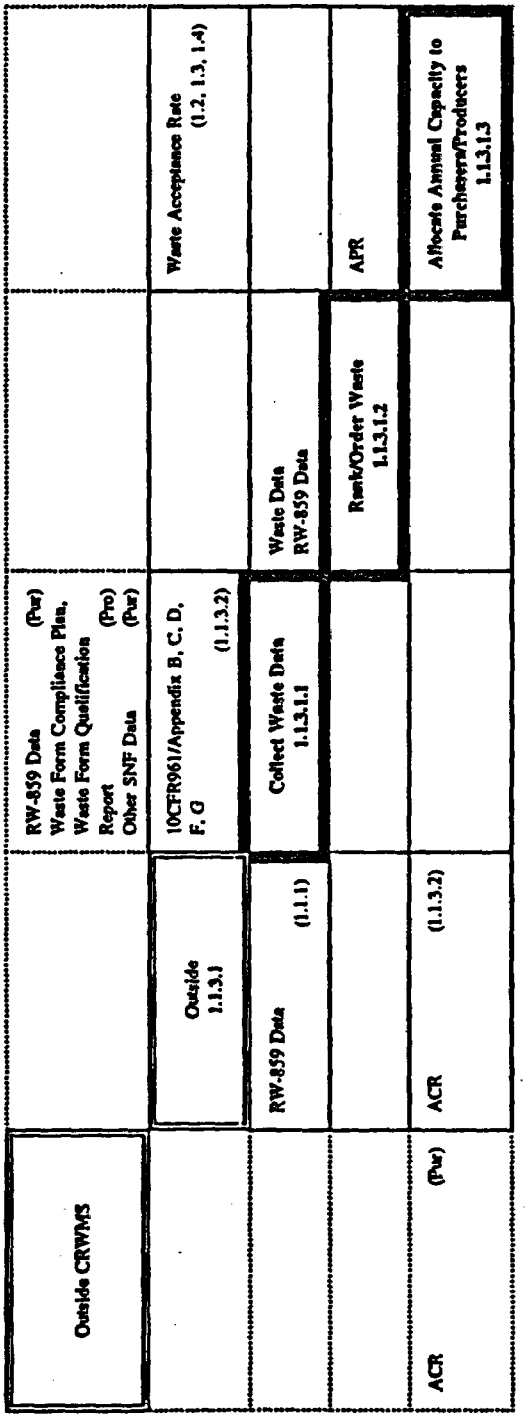

Figure A-7. N-Square Chart for 1.1.3.1 Allocate Waste System Capacity

Outside CRWMS		Submitted DCS (Pur)	Submitted DCS Exchange Request (Pur)	Request for Non-Standard Waste Delivery (Pur/Pro)	Submitted FDS (Pur)
	Outside 1.1.3.2	Evaluation Support (1.2)	Evaluation Support (1.2)	Evaluation Support (1.2)	Evaluation Support (1.2)
Approved DCS Disapproved DCS (Pur)	Approved DCS (1.2, 1.3, 1.4) Evaluation Request (1.2)	Evaluate Delivery Commitment Schedule 1.1.3.2.1	Approved DCS		
Approved DCS Exchange Request, Disapproved Exchange Request (Pur)	Approved DCS Exchange Request (1.2, 1.3, 1.4) Evaluation Request (1.2)		Evaluate DCS Exchange Requests 1.1.3.2.2		
Approved Request for Non-Standard Waste Delivery, Disapproved Request for Non-Standard Waste Delivery (Pur/Pro)	Approved Request for Non-Standard Waste Delivery (1.2, 1.3, 1.4) Evaluation Request (1.2)			Evaluate Request for Non-Standard Waste Delivery 1.1.3.2.3	
Approved FDS Disapproved FDS (Pur)	Approved FDS (1.2, 1.3, 1.4) Evaluation Request (1.2)				Evaluate Final Delivery Schedule 1.1.3.2.4

Figure A-8. N-Square Chart for 1.1.3.2 Identify Waste Locations/Characteristics

Outside CRWMS		SNF (Pur) HLW (Pro)	Title (Pur/Pro) Documentation (Pur/Pro) DOE/NRC Forms-741 & 742 (Pur)
	Outside Accept Waste Custody 1.1.4, 1.1.5	Unloaded Transportation Cask Subsystems (1.2) Empty MPCs (1.2) Approved FDS (1.1.3) Production Records (1.1.3) 10CFR961 Appendix F (1.1.3)	Approved FDS (1.1.3)
Notification of Discrepancy (Pro/Pur) Proposed Resolution (Pro/Pur)		Observe Waste Preparations 1.1.4	Documentation, Findings SNF/HLW Documentation Loaded Transportation Cask Subsystems Loaded MPCs
	Title (DOE/OCRWM) Documentation (DOE/OCRWM, 1.2) SNF Documentation (1.2, 1.3, 1.4) HLW Documentation (1.2, 1.4) Loaded Transportation Cask Subsystems (1.2) Loaded MPCs (1.2) DOE/NRC Forms-741 & 742 (1.1.8)		Accept Waste Title/Documentation 1.1.5

Figure A-9. N-Square Chart Accept Waste Custody

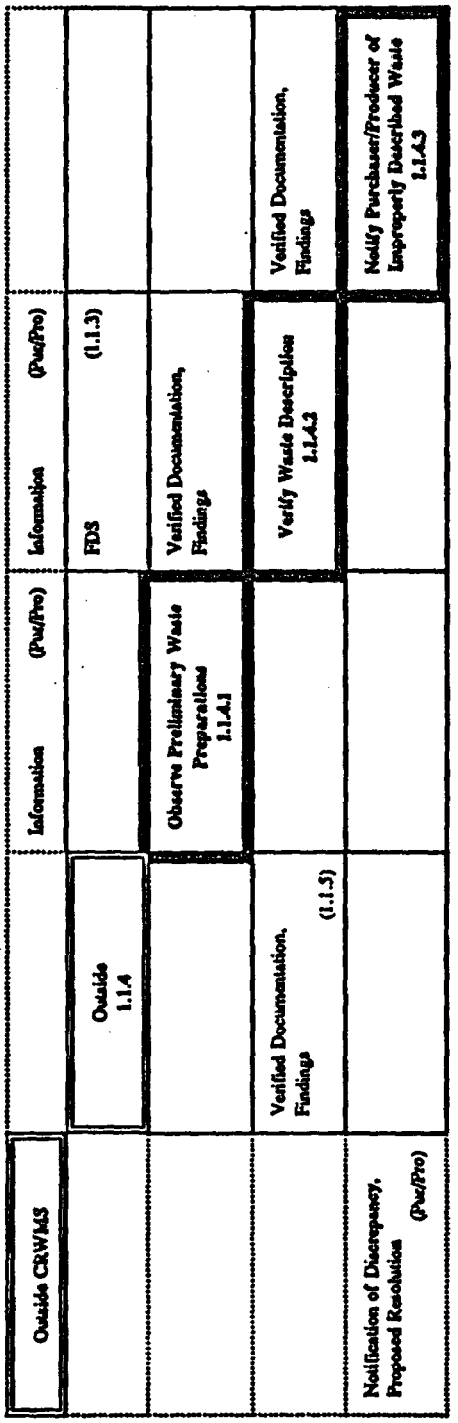

Figure A-10. N-Square Chart for 1.1.4 Observe Waste Preparations

APPENDIX B WA Function Allocation Table

Table B-1. Allocation of Functions to Architecture

Function Title	Waste Acceptance Segments			
	A	B	C	D
Accept Waste	X	X	X	X
Define Waste Acceptance Criteria	X			X
Establish Contracts/Agreements	X			X
Plan for Waste Acceptance	X			X
Allocate Waste System Capacity	X			X
Collect Waste Data	X			X
Rank/Order Waste	X			X
Allocate Annual Capacity to Purchasers/Producers	X			X
Identify Waste Location/Characteristics	X			X
Evaluate DCS	X			X
Evaluate DCS Exchange Requests	X			X
Evaluate Request for Nonstandard Waste Delivery	X			X
Evaluate FDS	X			X
Define Site Interface Capabilities	X			X
Observe Waste Preparations			X	X
Observe Preliminary Waste Preparations			X	X
Verify Waste Description			X	X
Notify Purchaser/Producer of Improperly Described Waste			X	X
Accept Waste Title/Documentation			X	X
Resolve Improperly Described Waste			X	X
Provide Fee Collection	X	X		X
Control and Account for Waste Inventory			X	
Perform Inventory Control			X	

Waste Acceptance Segments:
A - Contract/Agreement Management Segment
B - Waste Fund Management Segment
C - Waste Acceptance Management Segment
D - Support Segment

Function Title	Waste Acceptance Segments			
	A	B	C	D
Provide Accountability			X	
Provide Material Tracking			X	

Waste Acceptance Segments:
A - Contract/Agreement Management Segment
B - Waste Fund Management Segment
C - Waste Acceptance Management Segment
D - Support Segment

Enclosure 2

Large Scale Leach Testing

of DWPF Canister Sections

Report DP-MS-86-72

ENCLOSURE 2

MRS Symposia Proceedings
Vol. 84

Scientific Basis for Nuclear
Waste Management X

Dec. 1-4, 1986 Boston Mass.

LARGE SCALE LEACH TESTING OF DWPF CANISTER SECTIONS

DENNIS F. BICKFORD and DANIEL J. PELLARIN
E. I. du Pont de Nemours and Company, Savannah River Laboratory,
Aiken, SC 29808

ABSTRACT

A Large-Scale Leach Test Facility (LSLTF) has been constructed at the U.S. Department of Energy's Savannah River Laboratory (SRL) to perform static leach tests on 24-inch (610 mm)-diameter canister sections cut from simulated (nonradioactive) waste forms cast under reference conditions. The equipment and test procedures are designed to closely correspond to MCC-1 leach test criteria.

Less than a factor of 3 increase in leachability results from combined scale-up, glass-cracking, leached surface area estimation, and surface roughness effects. This factor is dominated by surface roughness of saw cut surfaces. The factor is negligible when compared to the 200,000/1 ratio of glass sample masses.

The MCC-1, and other small-scale leach tests have been valuable in determining the relative merits of alternative waste form compositions. However, the actual waste glass to be stored in repositories is subject to fracture, devitrification, and container/glass interactions, which are difficult to simulate on a laboratory scale. Large-scale leach tests integrate these and other possible waste form characteristics that are not represented in typical small samples.

The facility, equipment, test method and results of one year leach testing are discussed. These results substantiate the applicability of small scale test data which precede this work, and the use of small scale tests to simulate leaching of the Defense Waste Processing Facility's borosilicate glass product. Exceptionally good sampling statistics make the large scale data particularly well suited for verification of models of leachability rates.

OBJECTIVES

The effects of waste form characteristics and inhomogeneities, which are not represented in small laboratory specimens, are an integral part of LSLTF experiments. These include the effects of glass fracture, devitrification, thermal stresses, and canister/glass interactions that result from the complex temperature transients during the filling and cooling of metal canisters containing glass.

The test sequence described in this report was designed to determine if there is a significant scaling effect between the large amount of standardized MCC-1 (small sample size, typically 1.5 grams of glass) leach tests, and the full size DWPF waste form. Tests were therefore conducted as closely as possible to the MCC-1 method, to permit comparison to an accepted test method, for which leach test data is widely available.[1] It has also been generally demonstrated that the use of ultrapure deionized water, such as was used in these tests, is conservative because it minimizes solubility limit effects which generally reduce leach rates, and cause glass to appear more durable.

A secondary objective was to determine if the precision of leach test results can be significantly improved through the use of replicated and sequential leachant sampling from the same sample. It was believed that this might provide a more precise means of discriminating between various kinetic models which have been proposed for extrapolating leach tests to repository times.

EQUIPMENT DESCRIPTION

The LSLTF is an 8-ft x 12-ft x 5-ft high, temperature controlled water bath that can accommodate up to six simultaneous leach test experiments (see Figure 1). The glass specimens are sealed in polypropylene containers, together with the leachant (see Figure 2). The water temperature is maintained within a 1°C range by recirculating 16 gpm through a 18 kw heater. Temperature maps taken over the 42 inch elevation range of the sample region have shown the temperature to be within 1°C of the control temperature both within the bath and the test cells, complying to MCC-1 requirements. Temperatures are continuously recorded at six locations throughout the bath. A more detailed description of the equipment is available in Reference 2.

The LSLTF is designed to perform leach tests with samples, up to 2 feet in length, cut from stainless steel canisters filled with simulated DWPF glass. Two different kinds of leach tests can be accommodated: In the first, corresponding closely to the standard MCC-1 static leach test, the canister section is loaded into a flanged 26-inch diameter by 26-3/4 inch high, 1/2 inch thick polypropylene container, and sealed after the leachant is charged. In the second type of test, designed to simulate specific repository environments, the canister section is loaded into a flanged 31-inch diameter by 28-inch high, 1/2 inch thick polypropylene container, and sealed after the repository rock, leach sample and leachant are included. A typical container is shown in Figure 2.

Ten feed-through connections in each polypropylene cover accommodate 1/8-inch inside diameter vent and sample lines. The sample lines are terminated at fixed locations in the annular region between the container and canister section, and over the top surface of the canister section. A 3/32-inch diameter by 36-inch long stainless steel welding rod is inserted in the bottom end of each sample line to reduce the leachant volume in the line, and to provide rigidity of placement. The vent line and sample tubes are accessible from the top of the LSLTF, where they are available for sample withdrawal, leachant addition, and venting during the experiment.

EXPERIMENTAL

Three test cells (Samples #1, #2, #3) were loaded in 1985. Samples #2 and #3 contained 1-ft long sections cut from the center section of a canister containing nonradioactive SRL165 glass poured at 242 pounds/hour at 1050-1100°C. Each of these samples had a nominal surface area of 0.56 square meter, based upon the geometric area of top and bottom cut surfaces. The canister was cut using a tungsten carbide grit band saw, with water as the coolant and lubricant. Samples were flushed with ultrapure water to minimize adhesion of fines from the cutting operation. The Sample #2 canister section weighed 565 pounds, while that of Sample #3 weighed 622 lbs. Sample #1 contained 43 pounds of 304L stainless steel canister wall, corresponding to the amount of canister in each of the other two samples.

The tests were patterned after the MCC-1P Leach Test Method.[1] A detailed comparison of the differences necessitated by the scale of these test is discussed in Reference 2. None of the deviations are considered major. The inclusion of the blank or control (Sample #1) in the experiment provided assurance that the background leach rate and aging effects from the leach container, canister wall and sample support plate are small relative to the leaching of the glass product.

Canister sections were 11 and 12 inches long. In comparison to the laboratory scale experiments, the cut surfaces of these large scale samples are rough, and fractured by thermal stresses during casting. Both of these effects tend to increase the glass surface area available for leaching. The fractured surface area of the DWPF glass casting was estimated by the authors to range from 25 to 35% relative to the surface area of the unfractured monolith based upon measurement of crack length per area cross section. Because one of the primary objectives of this test was to compare small scale to actual scale samples, it was felt that the clearest test would not confuse the analysis by attempting to measure precise areas, or by estimating the availability of fractured surfaces for leaching. Therefore, the surface area of each sample is reported as 0.56 square meter, which is the nominal geometric area of the two cut surfaces, excluding both the curved area where the glass contacts the canister, and the area associated with cracks.

Fifty-six liters of ultrapure water were sealed in each container at the start of the test. This corresponds to the amount required for the MCC-1 leach surface area to leachate volume ratio of 0.1 cm^{-1}. Since the standard MCC-1 method permits a 5% variation in the leachate volume, and since the leach containers are surrounded by water, and not considered subject to evaporative losses, the withdrawal of up to 140 samples (of 20 ml each) was considered acceptable without exceeding MCC-1 guidelines.

LEACH TEST RESULTS

The composition of glass poured into the canister is shown in Table I. Average leachate concentrations as a function of time are given in Table II. All the constituents of the simulated waste glass are included: Si, B, Na, Li, Mg, Zr, Mn, Ca, Ni, Al, and Fe. Only averages are shown, because of space limitations. Complete data are available in Reference 2. Table I also indicates the number of leachate samples analyzed, generally the 9 samples from the 9 separate sample lines of each leach container. The fraction of non-oxide elements in the glass is given as f in Table II, derived from the glass composition of Table I. Also included are the compositions of the ultrapure water used in the tests, and of the process water (treated well water) used in the isothermal bath. The process water is included because a power failure after the 140 day samples had been drawn resulted in leakage of sample containers 1 and 2, which led to filling of the free volume of both vessels by process water. The resulting influx of water and chemical constituents was compensated for in final 483 day data by subtracting the solute carried in with the process water from the total in the container based on container volume and leachate analyses. The compensated 483 day samples were nearly co-linear with the rest of the data, when more loss was plotted versus log time.

Detailed discussions of the effects follow.

Sample to Sample Variation

Comparison of Sample #2 to Sample #3 mean leachant concentrations in Table 2 shows about 10% difference. This is somewhat larger than is typical of small samples with finely ground surfaces, but is reasonable given the glass fracture and local variations in roughness of the saw cut surfaces. More importantly, the use of sequential sampling of leachate from the same glass sample eliminates this source of error when studying leaching kinetics. Thus, for precision work it appears to be better to pull a sequence of leachate samples from one glass sample than to perform multiple glass sample tests.

In some cases several leachate samples were pulled in rapid succession through the same sample tubes. The only variation seen in this type of testing appears to be associated with the ion coupled plasma process used to analyze the samples. The standard deviation of such analyses was typically between 1 and 3% of the level detected. Bias between samples analyzed at different times was found to be excellent, generally within 2 standard deviations of the original analysis over a 1 year period. Through application of the Student T test, precision better than 2% is generally possible at the 90% confidence level for the major chemical constituents. Thus, the normalized mass losses of Figures 3 and 4, and the longer time mass losses of Figures 5 and 6 are precise enough to be used to discriminate between kinetic models.

Local Concentration Variations

Sample tubes were positioned at different elevations and radial locations for the tests. No significant differences were seen in the results, indicating thorough mixing of the leachate.

Colloid Effects

With the exception of nickel and calcium, comparison of the 28 day filtered, acidified, and unacidified leachate from Sample #3 in Table 2 does not indicate the presence of colloids. When Sample 3 was opened at 28 days, some portions of the leached layers were found floating in the leachate. This effect was also seen at the end of the test for Sample #2. Testing with a jet of the leachate indicated that velocities above 75 cm per second are necessary to peal the leached layer off of the smooth fracture surfaces. This indicates significant electrostatic or chemical bonding of the gel layer to the leached glass. Thus, most of the suspended material is considered to be an artifact of movement of the leach container prior to opening for inspection.

CONCLUSIONS

Since identical surface area to volume ratios, and leaching times were used, the 28 day large scale leach test data of Table I can be compared to leach data from typical MCC-1 tests to determine the effects of scale up. In both cases, the large scale results are within a factor of 3X of those of the small size standard samples with a 600 grit finish. A companion section from the same container of glass as those used in the large scale tests was core drilled, and small samples leach tested with one end of each the original saw cut surface. Typical leachate concentrations were about 1.5X those of the similar small samples with 600 grit finishes. Thus, it appears that if both of the flat surfaces of these samples had been saw cut, then the 3X "scale up factor" could have been duplicated. It can therefore be concluded that the surface roughness associated with the band saw cut surfaces accounts for most of the "scale up factor". This is substantiated by scanning electron miscroscopy of the different leach layers: The layers on the smooth, naturally occurring fracture surfaces are on average less than one third the thickness of those on the saw cut surfaces.

Irridescent leached layers were found on all the fracture surfaces which have been examined. The fact that leachate concentrations were not significantly affected by macro glass fracture appears to be the result of the smoothness of the fracture surfaces. Microcracking and surface roughening associated with cutting of samples appears to be a more significant source of leachable surface area, provided the glass is mechanically restrained.

ACKNOWLEDGEMENTS

The authors wish to thank W. L. Isom for design and construction of the LSLTF. E. V. Brown developed equipment and procedures. E. K. Landry assisted in the experimental setup. L. Salley aided in data analysis. G. C. Wicks conducted standard MCC-1 tests with ground finishes. This paper was prepared in connection with work done under Contract No. DE-AC-09-76SR00001 with the U. S. Department of Energy.

REFERENCES

[1.] Materials Characterization Center, "MCC-1P Static Leach Test Method," Nuclear Waste Materials Handbook, Sept. 30, 1981.

[2.] D. J. Pellarin and D. F. Bickford, "Large Scale Leach Test Facility: Development of Equipment and Methods, and Comparison to MCC-1 Leach Tests," DPST-85-615, NTIS Oak Ridge, TN, July, 1985. The data is also available on personal computer media from the authors.

TABLE I

Composition of SRL165 Average-Waste Glass Tested in Large Scale Leach Test Facility

Component	Weight %
SiO_2	54.1
Fe_2O_3	12.3
Na_2O	10.3
B_2O_3	6.8
Li_2O	4.7
Al_2O_3	4.1
MnO	2.4
CaO	1.5
NiO	0.9
MgO	0.8
ZrO_2	1.2

TABLE II

Mean Leachate Concentrations in Large Scale MCC-1 Leach Tests, mg/L

SAMPLE #, DAYS	Si	B	Na	Li	Mg	Zr	Mn	Al	Co	Ni	Fe	# SAMPLES
CONTROL: 42 POUNDS 304L STAINLESS STEEL FROM CANISTER												
#1,0d	0.1354	0.0546	0.4312	0.0245	0.0108	0.0004	0.0926	0.0041	0.0001	0.0409	0.1960	9
#1,1d	1.6261	0.0742	0.2825	0.0435	0.0157	0.0016	0.0046	0.0343	0.1308	0.1041	0.2068	18
#1,3d	1.8666	0.0096	0.3354	0.0490	0.0200	0.0031	0.1416	0.0448	0.1542	0.2494	0.2400	18
#1,7d	2.0647	0.1030	0.4046	0.0563	0.0261	0.0017	0.1707	0.0233	0.1925	0.2026	0.2111	18
#1,14d	2.2746	0.1217	0.4236	0.0727	0.0261	0.0032	0.2114	0.0095	0.2188	0.2226	0.2231	9
#1,28d	2.0918	0.1104	0.4048	0.0820	0.0200	0.0011	0.2092	0.0174	0.1943	0.1693	0.1834	27
#1,56d	2.0152	0.1420	0.5206	0.1123	0.0391	0.0031	0.3309	0.0425	0.3238	0.3753	0.1864	9
#1,82d	3.1100	0.1581	0.5201	0.1233	0.0463	0.0050	0.3846	0.0750	0.4372	0.2289	0.1311	18
#1,140d	3.3492	0.1075	0.0082	0.1462	0.0946	0.0057	0.4574	0.0000	0.8053	0.4700	0.0998	5
#1,483d *	6.4756	0.0050	3.7311	0.0326	0.3624	-----	0.1853	-----	0.9611	-----	0.0913	9
LARGE SCALE SAMPLE: 505 POUNDS GLASS AND 304L STAINLESS STEEL												
#2,0d	0.4702	0.1459	1.2092	0.2425	0.0330	0.0021	0.0906	0.0952	0.0412	0.1347	0.3021	9
#2,1d	7.1408	0.7289	3.3925	0.9317	0.0898	0.0038	0.0386	0.5730	0.0812	0.0952	0.2881	18
#2,3d	21.1983	2.3943	9.7308	2.7424	0.0961	0.0059	0.0811	1.4391	0.7271	0.1098	0.4340	18
#2,7d	35.6494	4.4712	17.7067	4.8959	0.1261	0.0084	0.1330	2.1056	0.6457	0.0844	0.0683	18
#2,14d	47.5178	6.2052	25.2389	6.9233	0.1478	0.0198	0.1193	2.6198	0.4224	0.1072	0.9407	9
#2,28d	63.1778	8.7722	35.9022	9.8898	0.1063	0.0190	0.1991	3.1066	0.1908	0.0608	1.2990	27
#2,56d	82.7422	11.8667	47.4167	12.9222	0.1832	0.0922	0.2113	3.7798	0.2298	0.1732	1.3607	9
#2,82d	100.0500	15.0000	56.9750	15.0438	0.2016	0.0513	0.2433	4.0956	0.1446	0.0500	1.7450	16
#2,140d	110.5600	16.7520	66.4900	17.9920	0.2149	0.0736	0.2793	4.0804	0.2329	0.0761	1.9022	5
#2,483d *	60.1444	9.0000	46.3996	10.0544	0.2467	-----	0.1334	-----	1.0567	-----	0.0314	9
DUPLICATE LARGE SCALE SAMPLE: 622 POUNDS GLASS AND 304L STAINLESS STEEL												
#3,0d	0.4718	0.0959	0.8790	0.1404	0.0202	0.0002	0.0421	0.0919	0.3943	0.2063	0.2741	9
#3,1d	7.1933	0.6000	3.1000	0.8474	0.0790	0.0016	0.0262	0.5000	0.0577	0.0351	0.1063	18
#3,3d	21.0722	2.3953	9.0129	2.6721	0.0849	0.0044	0.0457	1.4266	0.5753	0.0995	0.2796	18
#3,7d	36.2417	4.4151	17.4817	4.9068	0.1104	0.0107	0.0757	2.2236	0.3966	0.0090	0.5170	18
#3,14d	52.4856	6.6124	26.2100	7.1763	0.1400	0.0234	0.1180	3.0281	0.2054	0.0540	0.8762	9
#3,28d	70.7322	9.5283	37.8367	10.3618	0.1692	0.0362	0.1781	3.6248	0.1400	0.0075	1.2914	27
#3,28d, FILTERED	72.1104	9.4296	38.4778	10.5492	0.1651	0.0903	0.1664	3.8220	0.0027	0.0000	1.2081	27
#3,28d, NO ACID	74.5044	9.7452	38.2078	10.3543	0.1751	0.0635	0.1867	3.7819	0.0196	0.0460	1.3630	9
STANDARD SIZED SAMPLES												
#600 FINISH,28d	33.1950	3.3723	11.8675	3.3650	0.1203	0.0091	0.0809	1.7800	0.2405	0.0000	0.6418	2
SAW CUT 1 FACE,28d	48.9778	4.7989	20.1956	5.2811	0.0947	0.0230	0.1737	3.3778	0.3293	0.0900	0.7956	9
LEACHANTS												
ULTRAPURE WATER	0.0173	0.0011	0.0441	0.0001	0.0000	0.0015	0.0007	0.0209	0.0394	0.0482	0.0090	2
PROCESS WATER	6.9418	0.0564	5.2942	0.0528	0.5908	0.0643	0.0464	0.4946	7.9482	1.3347	2.1552	6
SRL165 AVERAGE COMPOSITION												
ATOM FRACTION, %	0.2529	0.0211	0.0764	0.0218	0.0048	0.0089	0.0186	0.0217	0.0107	0.0071	0.0060	

* AIR SPACE FILLED WITH PROCESS WATER RESULTING FROM LEAKAGE CAUSED BY POWER OUTAGE

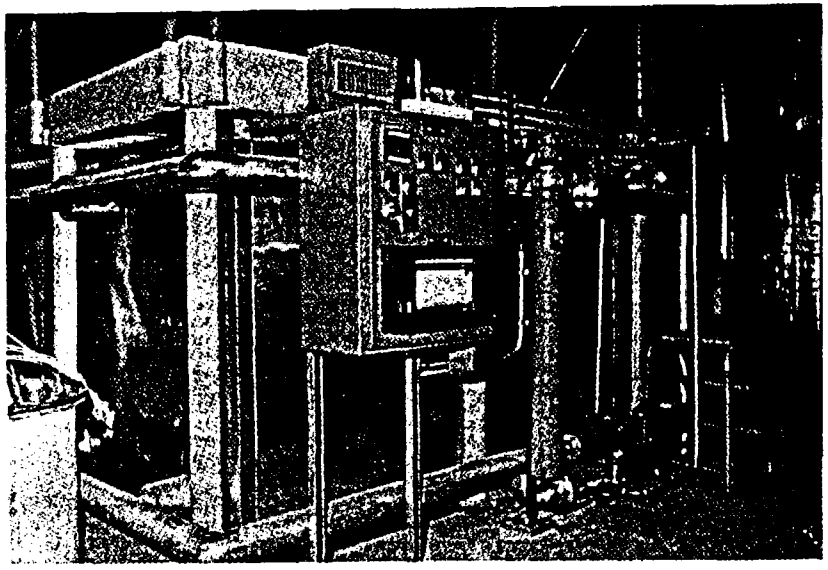

FIGURE 1. Large Scale Leach Test Facility - Isothermal Bath for Simultaneous Leach Testing of Six Full-Scale Canister Sections.

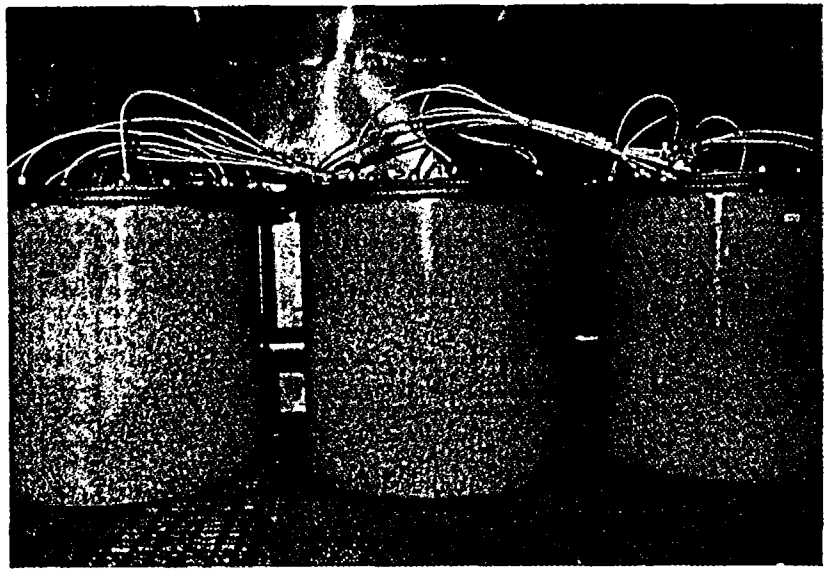

FIGURE 2. Containers for Two-Foot-Diameter Leach Samples. [Note leachate sample lines exiting top of container. Larger containers (not shown) permit simulated repository testing.]

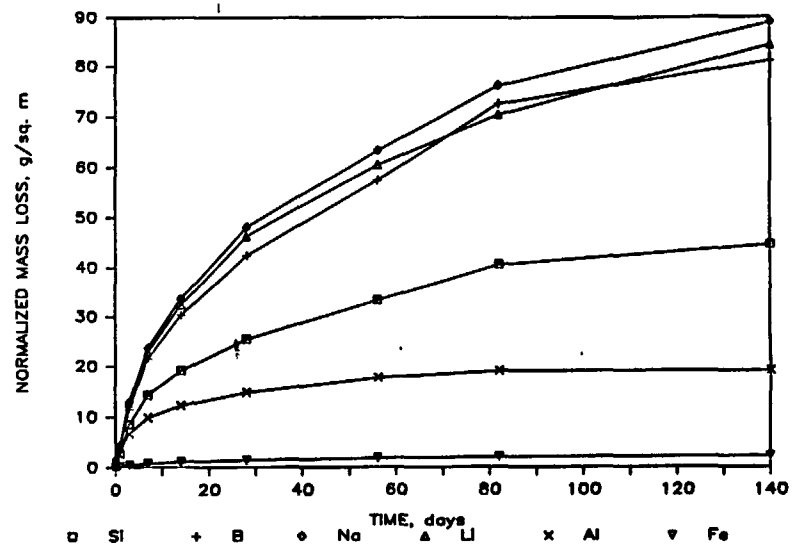

FIGURE 3. Normalized Mass Losses of Major Glass Constituents Indicate Slowing of Aluminum and Iron Loss Rates, and Continuing Ion Exchange of Alkali. Silicon Behavior is Intermediate.

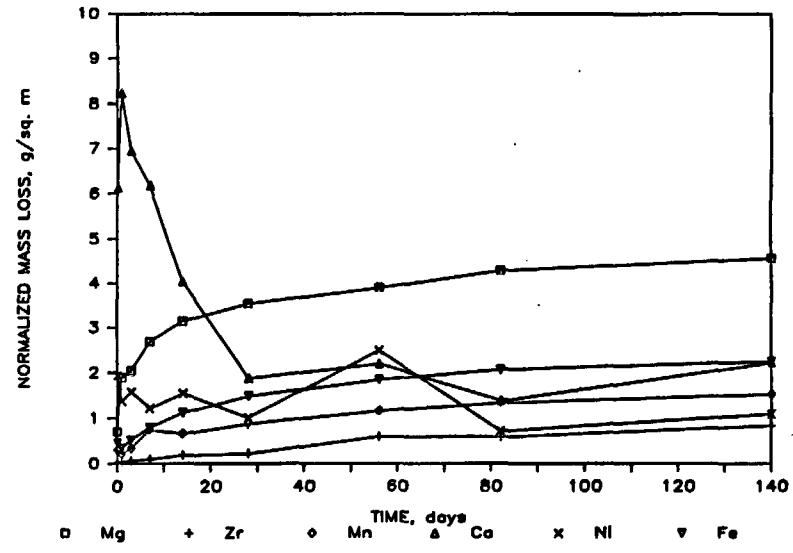

FIGURE 4. Normalized Mass Losses of Minor Glass Constituents Indicate Stabilization of Losses. Indicated Decrease in Calcium Mass Loss is the Result of Calcium Carbonate Precipitation.

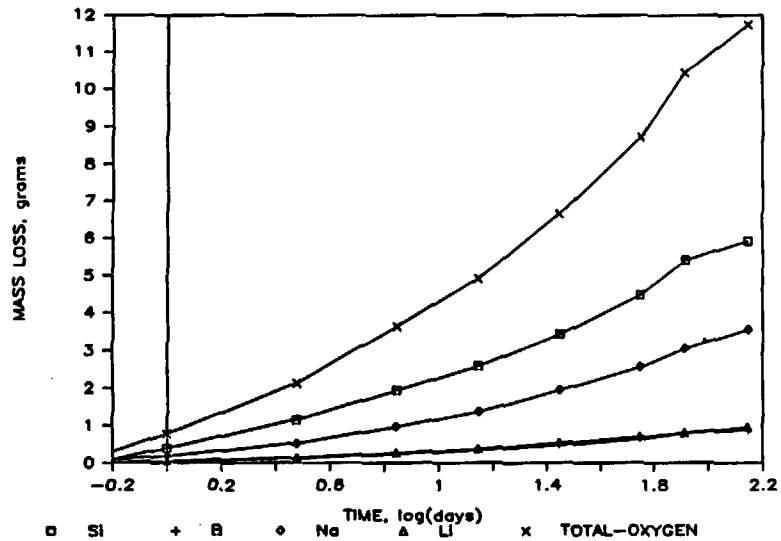

FIGURE 5. Mass Loss of Major Constituents From Sample With 0.56 Square Meter Surface Area.

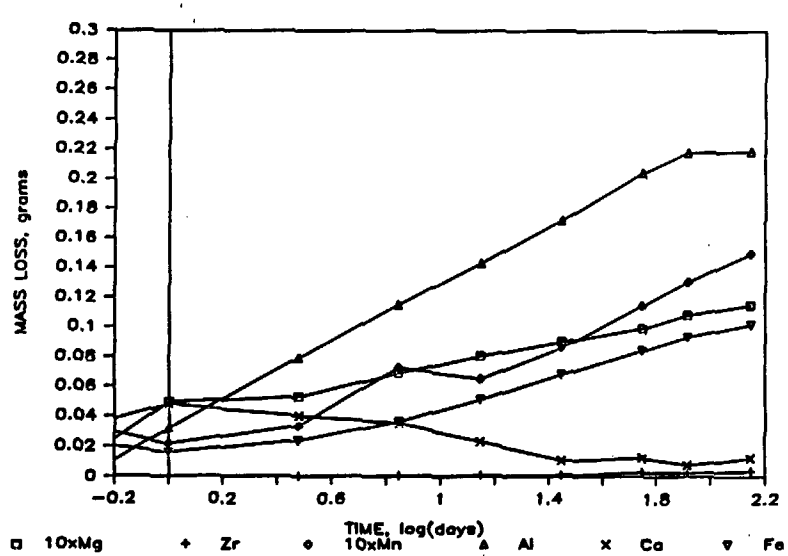

FIGURE 6. Mass Loss of Minor Constituents From Sample With 0.56 Square Meter Surface Area.

Enclosure 3

SCA Question 53 and Original DOE Response

NRC Evaluation of Original DOE Response

DOE Supplemental Response to NRC Question 53

ENCLOSURE 3

Section 8.3.5.10. Issue resolution strategy for Issue 1.5: Will the waste package and repository engineered barrier systems meet the performance objective for radionuclide release rates as required by 10 CFR 60.113?

Waste form definition p. 8.3.5.10-34 para 4.

QUESTION 53

Why has the cooling rate of the glass wast form not been specified?

BASIS

o Cooling rate of glass can significantly affect fracturing of the monolith and the production of fissures prior to emplacement and can substantially increase the surface area of the glass waste form available to water in the event of a canister breach.

o Cooling rate of glass can influence the level of residual stresses in the pour canister and could also have an effect on the sensitization of the 304L stainless steel pour canister.

RECOMMENDATIONS

o An appropriate specification should be developed and presented for controlling the cooling rate of the glass waste form.

o The basis for such a specification should be developed and presented, as well as any plans for testing to establish the basis and/or specification.

RESPONSE

The U.S. Department of Energy agrees with the basis provided for the U.S. Nuclear Regulatory Commission question. This question must be taken up with the Waste Acceptance Committee and Materials Steering Committee. The specification of a cooling rate would require changes to the preliminary waste acceptance specifications (PWAS) and the waste compliance plans.

Current plans call for cooling the pour canister in air. Since the pour temperature, canister volume, and canister shape are all nominally constant, the resulting cooling histories for the containers should be quite similar.

The cooling history is also of concern from the standpoint of devitrification of the glass. A specification covering this concern is already in place (PWAS, OGR/B-8 Specification 1.4).

REFERENCES:

Office of Civilian Radioactive Waste Management (OCRWM), 1986, Waste Acceptance Preliminary Specifications for the Defense Waste Processing Facility High-Level Waste Form, OGR/B-8; DOE/RW-01.

Section 8.3.5.10 Issue resolution strategy for Issue 1.5: Will the waste package and repository engineered barrier systems meet the performance objective for radionuclide release rates as required by 10 CFR 60.113?

Waste form definition, p. 8.3.5.10-34, para. 4

SCA QUESTION 53

Why has the cooling rate of the glass waste form not been specified?

EVALUATION OF DOE RESPONSE

- DOE agrees with the NRC that a cooling rate of the glass waste form should be specified and will take up this question with the Waste Acceptance Committee and the Materials Steering Committee.
- The NRC staff considers this question open.

DOE Supplemental Response

The DOE revisited the issue of cooling rate during the writing of the Waste Acceptance System Requirements Document (WASRD) (DOE/RW-0351, Rev. 1). The Waste Acceptance Committee and the Materials Steering Committee mentioned in DOE's December 14, 1990, initial responses to the SCA no longer exist. Some of the functions of the Waste Acceptance Committee are part of the Waste Acceptance Technical Review Group. However, their focus is on the compliance of subsidiary documents, such as the Waste Form Compliance Plans of the producers, with the requirements documents, such as the WASRD.

The WASRD evaluated several parameters in its development. The cooling rate of the glass waste form was not included in the document. The concern was not on the amount of cracks that could form on cooling, but rather on the potential for phase transformations. Thus, the WASRD includes a criteria for the canistered waste form such that the Producer shall ensure the phase structure and composition of the canistered waste form are not degraded after initial cooldown by maintaining the temperature below 400°C to ensure the glass transition temperature is not exceeded.

The cooling rate can influence the level of residual stress in the pour canister. However, the likely effect is that residual stresses in the canister will be reduced as a result of the relatively slow cooling of the canister prior to transfer to storage. In addition, the possibility of sensitization of the stainless steel canister has been addressed in a detailed study of this issue under the direction of Lawrence Livermore National Laboratory[1] (attachment). Although the potential for sensitization was found to be low, DOE is not currently taking credit for the pour canister as a containment barrier. In addition, the low potential for sensitization should not impact the later transfer of the canisters into transportation casks or handling at the repository.

The amount of surface area available to water potentially contacting the waste form after container breach is not a significant factor in assessing the performance of the glass in the repository. This conclusion is based on the experimental work of Bickford and Pellarin (1986) (Report DP-MS-86-72). This work showed that the release of radionuclides from fractured glass sections cut from large-scale canisters was not dramatically different from that of small disks used in the standard Materials Characterization Center test MCC-1.

As a result of these studies at Westinghouse, Savannah River Complex, no reason to control the cooling rate of the glass waste form other than that required to maintain the integrity of the pour canister and to cool the glass to below the glass transition temperature as quickly as possible could be determined.

The DOE has performed some preliminary performance assessments for a potential repository at Yucca Mountain. For these assessments, the surface area of the glass available for leaching was assumed to have a normal distribution with a mean value of about 0.57 cm^2/g. This compares with the geometric surface area of 0.03 cm^2/g, a factor of 20 smaller. Thus, cracking of the glass that could increase its surface area has been accommodated, and the DOE cannot determine a need to control the cooling rate of glass.

Attachment

[1]M. Juhas, D. McCright, and R. E. Garrison, "Behavior of Stressed and Unstressed 304L Specimens in Tuff Repository Environmental Conditions," CORROSION 85, Boston, MA, March 25-29, 1985. (Also available as UCRL-91804.)

Attachment

Behavior of Stressed and Unstressed 304L Specimens in Tuff Repository Environmental Conditions

SAI
T&MSS
LIBRARY

Behavior of Stressed and Unstressed 304L Specimens in Tuff Repository Environmental Conditions

M. C. Juhas
R. D. McCright
R. E. Garrison

Abstract

This paper presents preliminary results of an investigation of the behavior of candidate barrier material for high level nuclear waste storage, Type 304L stainless steel, in tuff repository environmental conditions. Tuff is a densely welded, devitrified, igneous rock common to the proposed repository site at Yucca Mountain, Nevada. The results discussed include: irradiation corrosion tests, U-bend irradiation corrosion tests, slow strain rate tests, and bent beam stress corrosion tests. Results indicate that Type 304L stainless steel shows excellent resistance to general, localized, and stress corrosion under the environmental and microstructural conditions tested so far. The environmental test conditions are 50-100°C J-13 well water (non-saline, near neutral pH, and oxic in nature) and saturated steam at 100°C. Microstructural conditions include solution annealed and long furnace heat treatments to provoke a sensitized structure. However, this particular type of stainless steel may be susceptible to long-term, low-temperature sensitization because of the combination of expected time at elevated temperature and residual stress in the container after emplacement in the repository. Other grades of austenitic stainless steels are reported to be more resistant to low-temperature sensitization. Future work will therefore include more extensive testing of these grades.

*Work performed under the auspices of the U.S. Department of Energy by the Lawrence Livermore National Laboratory under contract number W-7405-ENG-48.

the Topopah Spring Member where it lies at lower elevation and is in the saturated zone. The water from J-13 well is taken as a reference water in the repository horizon. The chemical composition of J-13 water is given in Table 1. The water is oxic and contains 5.7 ppm dissolved oxygen. The low concentration of halide ions suggests that the water should not be aggressive toward stainless steels; however the oxidizing nature of the water makes it corrosive toward carbon steels. The low average rainfall at the NTS creates a low downward infiltration rate for water. The downward flux of water at the repository horizon is estimated at less than 1 mm/yr.[4] Thus, the environmental conditions in this unsaturated region are expected to be air and water vapor for much of the containment period.

The current approach to nuclear waste containment is a system of redundant engineered barriers whose function is to contain radionuclides for several centuries. As a minimum, the package is composed of a waste form and a metal container. Some designs call for a second outer metal barrier (an overpack), while others use a packing material (backfill) around the outer metal barrier. The packing material acts to limit flow of water in the package vicinity and to sorb any radionuclides that have migrated through a corroded or otherwise breached metallic barrier. As the environmental conditions in a tuff repository are expected to be rather benign, the reference conceptual design consists of a single metal barrier surrounding the waste form.

Waste Forms and Packages

There are three forms of high level nuclear waste that may go into the tuff repository: (1) spent fuel (SF) from commercial light water nuclear reactors; (2) defense high-level waste (DHLW), which is a borosilicate glass and is manufactured from the high-level liquid radioactive wastes accumulated from defense installations; and (3) commercial high level waste (CHLW), which is also a borosilicate glass containing the high-level fission products from reprocessing of spent fuel.

TABLE 1 Reference Groundwater Composition for Tuff Repository[2] (J-13 Well)

	Concentration (mg/liter)
Sodium	43.6
Potassium	5.1
Magnesium	1.92
Calcium	12.5
Iron	.01
Aluminum	.01
Silicon	27.0
Fluoride	2.3
Chloride	6.8
Bicarbonate	134.0
Sulfate	18.8
Nitrate	9.2

The spent fuel waste form consists of Zircaloy-clad fuel from pressurized water reactors (PWR) and boiling water reactors (BWR). The spent fuel pins vary in dimension for the different reactor types and models, but in general contain UO_2 pellets, fission products, and actinides enclosed in the cladding. The UO_2 fuel pellets undergo physical and chemical changes during irradiation. The products are generally segregations of oxide compounds that have low solubility in UO_2 or elements that are metallic under redox conditions in the fuel. For geological disposal intact fuel assemblies may be packed into canisters or they may be disassembled and the fuel pins repacked into canisters. The heat output of spent fuel depends on the length of time since the fuel was removed from the reactor and the degree of burn-up while in the reactor. The heat output from spent fuel decreases sharply during the first ten years after removal from the reactor due to decay of short-lived fission product isotopes. After ten years, the decay of longer-lived isotopes control heat production, and the heat output decay is slower.

Defense high-level waste (DHLW) results from processing high-level liquid wastes. These are currently stored at three different sites in the United States. The Savannah River site will be the first source of DHLW. The formulation is described by Baxter.[5] For geological disposal, the molten DHLW glass (~1050°C) is poured into a stainless steel canister. Although a slow pouring process allows the glass to cool before reaching the container, estimates of the glass temperature on contact are about 750°C. Approximately 17 hours are required to fill the 24 inch diameter 10 foot long canister and several additional hours are required to cool the glass casting and canister to ambient temperature. The times at these elevated temperatures may create a sensitized microstructure in the canister which may then be susceptible to localized and stress-assisted forms of corrosion in aqueous environments. This issue will be addressed in detail later in this report. Type 304L stainless steel was selected for the DHLW pour canisters because of its excellent oxidation resistance during the pouring and cooling operations. During the pouring operation, the outside surface of the canister is radioactively contaminated with fine air-borne glass particles. The surface is cleaned by an abrasive process after the pour; a canister material with minimal scale formation is desirable to minimize this burden. The canister is then sealed with a 304L plate which is upset resistance welded to the

canister. The low carbon content of this steel should normally impart resistance to developing a sensitized microstructure in the heat affected zone around welds. However, the combination of high deformation strain and the temperatures developed around welds produced by the upset resistance process may favor eventual development of a sensitized microstructure even in low-carbon stainless steel. While further process development is likely, the Savannah River process can be viewed as prototypic for both DHLW and CHLW glasses.

Commercial high level waste (CHLW) forms result from reprocessing of spent commercial reactor fuel in order to separate potentially useful components such as U and Pu from the fission products and higher actinides. At present, there is no operating reprocessing plant for commercial spent fuel in the United States. Borosilicate glass formulations have been developed as part of the national nuclear program. A small inventory of commercial reprocessing waste exists from the West Valley, NY, operation. Present plans call for casting this waste form into a 304L stainless steel pour canister by a process similar to that discussed for the DHLW.

Figure 1 indicates the temperatures measured on the external surface of the side wall of the canister during a simulated DHLW glass pour operation at Savannah River. A maximum of 550°C was measured in this determination, but a good possibility remains that higher temperatures would have developed at the bottom of the canister where thermocouples were not installed. Experiments are currently underway with thermocouples embedded at the bottom of the canister.

304L as Candidate Canister Fabrication Material

Type 304L stainless steel has served as the reference fabrication material for NNWSI canisters. From past engineering experience, this material is expected to have excellent general corrosion resistance in expected repository environmental conditions that are air and steam at temperatures in the range 95-300°C and with the possible intrusion of vadose water at temperatures below 95°C. The characteristics of this vadose water are that it is non-saline, near-neutral pH, and oxic. Austenitic stainless steels typically show low

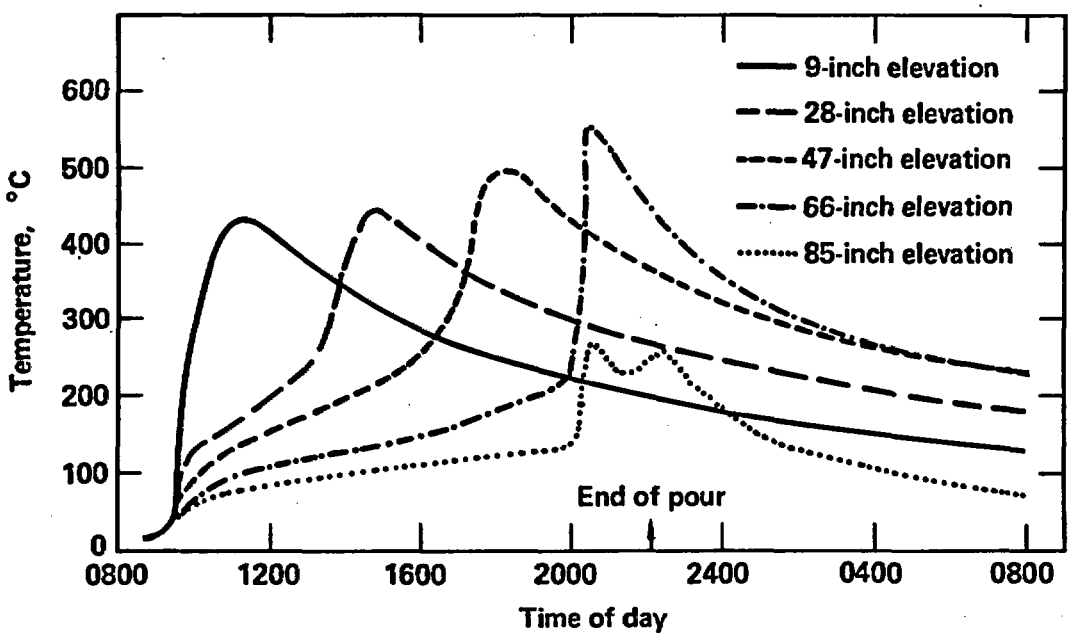

Fig. 1 *Cooling curves for full-size canisters filled with glass under reference conditions. These temperatures represent the outside surface of the canister.*

general corrosion rates in these kinds of water. A conservative estimate of the wastage of 304L during the containment period (up to 1000 years) shows a loss of 0.1 cm from a canister wall. This estimate was based on "high values" of uniform corrosion and oxidation rates in water, steam, and air assuming linear oxide growth kinetics.[6]

The limiting use conditions of 304L stainless steel are rarely general corrosion wastage, but rather occur by much more rapid penetration via localized or stress-assisted forms of corrosion. The experimental test plan is, therefore, largely aimed at resolving the likelihood of these forms of corrosion occurring during the containment period. For purposes of organization, the forms of corrosion can be placed in two groups: localized and stress-assisted. For a detailed discussion on the potential corrosion-related problems relative to austenitic stainless steel nuclear waste canisters emplaced in a tuff repository, the reader is urged to see reference (7).[7]

Possible Corrosion Degradation Modes of 304L Stainless Steel

The first group of degradation modes deals with corrosion forms favored by concentration of the different chemical species in J-13 water. Fractures in the host rock above the repository could admit episodic surges of water. This water could be retained for some period of time by plugging the fractures below the repository. Contact of the water with the hot canister surface would concentrate electrolytic species by evaporation of water. The chloride-ion concentration is of paramount concern with regard to resistance of stainless steels to localized and stress-assisted forms of corrosion. The other ions present in J-13 water may favor or retard these kinds of corrosive attack. Radiolysis of the aqueous environment can cause chemical changes in the water and the dissolved species which, in turn, influence the form and rate of corrosion. Pitting attack, crevice attack, and transgranular stress corrosion cracking (TGSCC) are corrosion forms that develop on 304L in concentrated electrolytes - particularly in high chloride solutions.

The second group of corrosion degradation modes concern localized and stress-assisted attack favored by a sensitized microstructure. The classical grain boundary chromium depletion mechanism is used to explain sensitization behavior.[8] Sensitization kinetics are typically illustrated using a Time-Temperature-Sensitzation (TTS) curve as shown in Figure 2. While the estimated times and temperatures of DHLW emplacement (17 hours at 750°C) are not with the sensitization regime for "L" grade materials, there are several environmental variables which could contribute to a sensitized microstructure. These will be taken up later in this paper.

The TTS curve represents an isothermal plot, i.e., a behavior which occurs when a sample is held at a constant temperature for a given length of time. The possible sensitization which may occur in the nuclear waste canister does not occur via such an isothermal process, but rather through a complex thermal history including fabrication, glass pouring (DHLW and CHLW), welding, and long-term storage at elevated temperatures.

At low temperatures, below the precipitation region of Figure 2, isothermal carbide precipitation does not occur because of the rapid decrease in the rate of nucleation with temperature. The carbide particles, thermodynamically stable if formed at high temperatures, do not dissolve at lower temperatures. At temperatures too low for carbide nucleation, however, existing particles can continue to grow and establish a new and lower interfacial chromium level as well as a new depletion profile. Such a situation has been shown to occur by Fox (aka Povich) and others[8-11] and will be discussed later in this paper.

During the welding and glass pouring processes (DHLW and CHLW), carbide precipitation may occur (especially in the higher carbon grades, e.g., 304) in both the weld heat affected zone (HAZ) and in the base metal. Since cooling is rapid, these carbide particles remain quite small. Such carbides cause little chromium depletion or sensitization and virtually no degradation in corrosion resistance. Once nucleated however, these carbides are stable and can, as stated above, grow at temperatures where isothermal precipitation

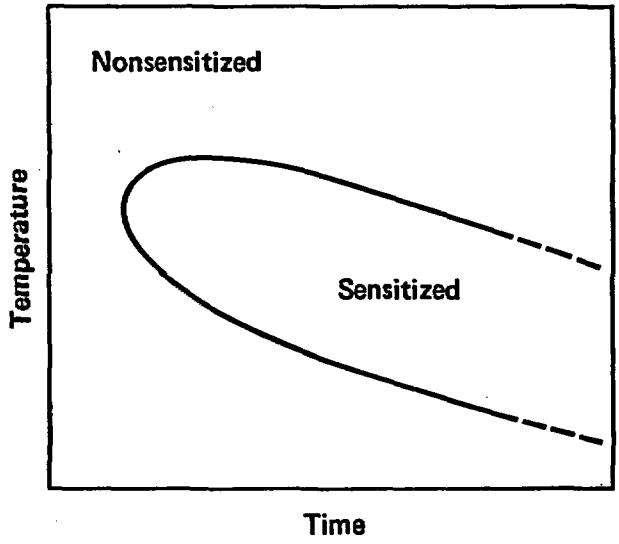

Fig. 2 Schematic time, temperature, sensitization (TTS) diagram

could not occur. Carbide growth is slow and may take several years at storage temperatures of ∿200°C. A containment period of 300-1000 years is the objective for the metal barrier causing a great deal of concern about long-term microstructural stability.

Low Temperature Sensitization

While experimental results on specimens given deliberate treatments to try and produce a sensitized microstructure indicate that 304L is thus far resistant to IGSCC, it is well known that three conditions react synergistically to produce this phenomenon in stainless steels: (1) tensile stress, (2) an environment that will facilitate IGSCC (usually mildly to strongly oxidizing), (3) a continuously sensitized microstructure. The sensitized microstructure is produced at high temperature where chromium diffusion is facilitated. For this reason, IGSCC is typically associated with some type of elevated temperature exposure. The glass pouring and welding processes could certainly provide a suitable thermal environment for sensitization although the time at temperature may be insufficient for grain boundary carbide growth and chromium depletion. Lowering the carbon content, as in 304L, avoids "high temperature" sensitization by reducing the chromium carbide particles beyond detectable size limits and breaking up any continuous chromium depleted pathways along grain boundaries.

Preliminary stress analyses show the filled canister to be free of any sizable stresses which would threaten the integrity of the structure. All stress analyses thus far have been quite simple and by no means provide enough information for material selection. However, residual stresses due to cooling of the borosilicate glass and thermal cycling from the closure weld could provide the minimum threshold stress requirement for some type of stress-assisted corrosion.

As mentioned earlier in this paper, the highly fractured tuff rock could experience episodic surges of vadose water which, during the first few hundred years after emplacement, would vaporize upon contact with the canister. The remaining deposits of concentrated electrolytes, particularly chloride ion, could provide initiation sites for localized attack and subsequent propagation as a pit or crack through the container wall.

SAI
T&MSS
LIBRARY

A sensitized microstructure can be produced in the area to the right of the time-temperature-sensitization (TTS) curve (Figure 2). It has also been shown that sensitization can occur at temperatures below the TTS curve previously believed to be immune to carbide nucleation and growth.[9, 10, 11] This phenomenon is termed low temperature sensitization (LTS).

An example of LTS would be a post-weld stress relief situation. The sensitization that occurs upon welding of stainless steel is usually limited to the heat affected zone (HAZ). Typically, the degree of sensitization due to weld thermal cycles is not appreciable when suitable welding parameters are used. However, sensitization can develop at seemingly "safe" temperatures (<300°C) if chromium carbide nuclei are present, especially in a stress-enhanced situation.

Results of extensive LTS research, detailed in reference 12, show that LTS is a nucleation and growth phenomenon: the chromium carbide particles nucleate in the temperature range 500-800°C and continue to grow at temperatures well below 550°C via substitutional diffusion of chromium and interstitial diffusion of carbon (Figure 3). The rate-limiting growth step would be chromium diffusion in the austenite matrix. LTS has been found to obey an exponential temperature dependence with activation energies ranging from 40 to 70 kcal/mole, depending upon the amount of cold work and on the test method used to measure sensitization. The activation energy of 70 kcal/mole corresponds to diffusion of chromium through the bulk stainless steel and 40 kcal/mole corresponds to chromium diffusion along grain boundaries or dislocation pipes.

The high temperature nucleation of carbides can occur upon welding or any other high temperature exposure. In the case of storage of DHLW and CHLW packages, this high temperature exposure could be produced by welding the canister during fabrication, during glass pouring, or a combination of both.

Computer simulation studies[13] have been developed to predict sensitization and desensitization in a variety of 18 Cr - 8 Ni alloys. These programs are based on classical nucleation theory as well as limited experimental data. Thermal histories representing the glass pouring, welding,

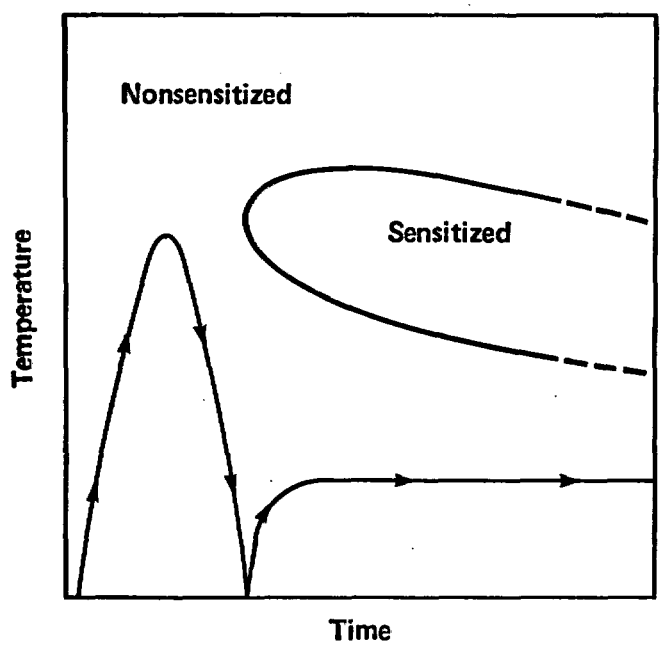

Fig. 3 Low temperature sensitization (LTS) occurs when carbides are nucleated by a brief high temperature exposure followed by holding at temperatures below the TTS curve

and predicted cooling behavior have been generated and in turn superimposed on the computer-generated time-temperature-sensitization curves (TTS). The details of the computer program and the assumptions accompanying the model are available to the reader.[13] An example is shown in Figure 4 using curves generated for Type 304 stainless steel. This of course would yield a more conservative result due to the higher carbon content than 304L. The code predicts no sensitization will occur under the given process time and temperature conditions. Although the author does not state it, the activation energy of 67 kcal/mole for carbide precipitation probably represents bulk diffusion in an annealed material. The activation energy for cold worked material would be significantly lower than that for the annealed case, shifting the "nose" of the TTS curve to the left. Moreover, the present curve does not provide for the LTS phenomenon. Because of high-strain-induced effects, LTS may be operable at conditions outside the precipitation area of the usual TTS curve generated from isothermal treatments which also tend to stress relieve. Computer-simulated sensitization should be altered to accommodate the effects of prior cold work.

Test Program

The purpose of this investigation is to assess the behavior of the 304L reference material in both the stressed and unstressed states in tuff repository environmental conditions and in turn extrapolate these results over the 300-1000 year containment period. In addition to the reference material, a variety of alternative materials is also under investigation. These include 316L, 321, I825, and copper-base materials as an alternative alloy system to the Fe-Ni-Cr alloy system. However this report will deal principally with the results of corrosion testing of 304L and some 304. The 304 data is being reported for comparison. Because it contains more than twice as much carbon as 304L, 304 is much more prone to sensitization than 304L. Type 304 specimens were added to some tests because an early failure of some specimens indicates the test validity to discern susceptibility to non-uniform corrosion modes.

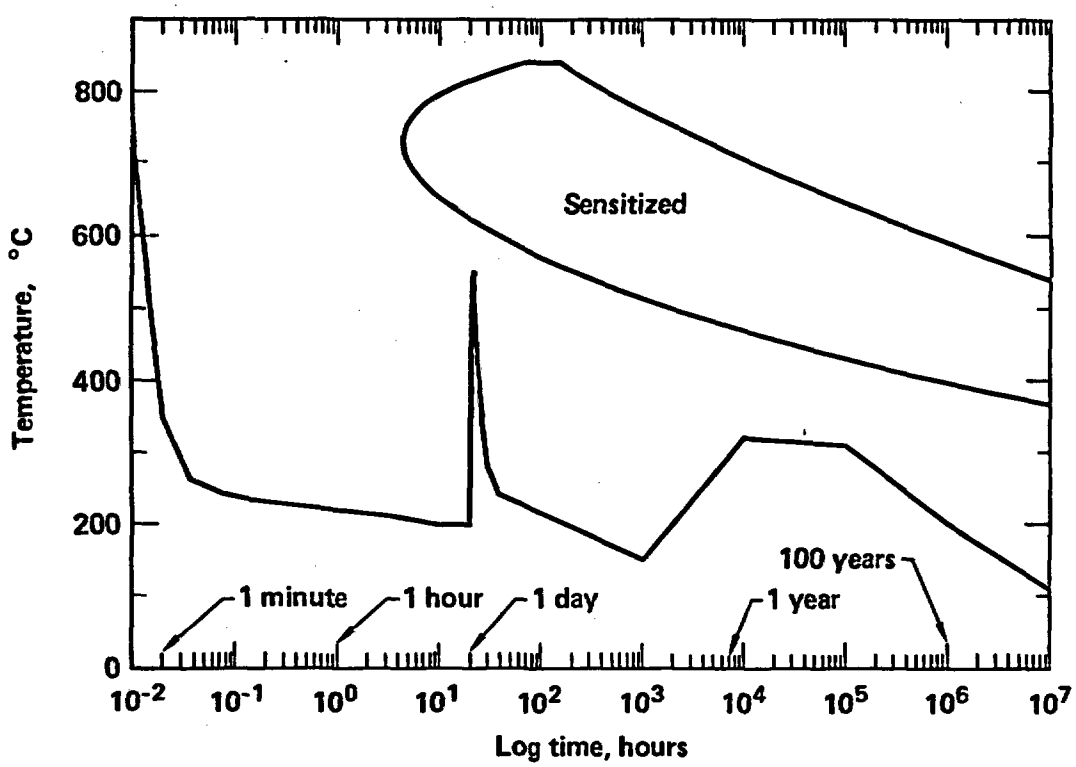

Fig. 4 Computer simulation of Type 304 stainless steel canister. Thermal history showing welding, glass-pouring, and storage.

The test results discussed in this paper include:

(1) Irradiation corrosion tests

(2) U-bend irradiation-corrosion tests

(3) Slow strain rate tests (SSR)

(4) Bent beam stress corrosion tests.

The irradiation corrosion, U-bend irradiation corrosion, and slow strain rate tests were performed at Pacific Northwest Laboratories under the direction of R. E. Westerman and S. Pitman.

Each set of results will be reported separately in the following sections.

1. Irradiation Corrosion Tests

Results are reported on 304L corrosion coupons tested for one year at room temperature and $\sim 1 \times 10^5$ rads/hr in partially aerated (5 ppm O_2) J-13 water in contact with crushed Topopah Spring tuff. This level of gamm flux is based on estimates of the expected dose rate given off by newly emplaced waste. The specimens had been solution annealed and sensitized prior to testing. An identical but non-irradiated test was conducted simultaneously for control. Preliminary chemical analysis of the water after one year of testing indicates that many of the dissolved ionic species in the J-13 water were concentrated by a factor of about two in the irradiated vessel as compared to the unirradiated vessel. The irradiated solution was relatively depleted in dissolved nitrate and oxygen, and enriched in ammonia, chloride, calcium, strontium, magnesium, nickel, and manganese compared to the unirradiated control. It seems probable that the oxygen depletion resulted from an enhanced corrosion rate of the vessel wall which is 304 stainless steel, the soft nickel gasket, or the specimens in the irradiated case, accounting for the higher concentrations of Mn and Ni. However, weight loss measurements on the specimens showed barely detectable corrosion on both the irradiated and non-irradiated material, whether sensitized or annealed.

A summary of the corrosion behavior of the exposed 304L coupons is given in Table 2. Coupons were nominally 1.75-inch diameter rounds 1/16-inch thick. The results indicate a minimal amount of corrosion for both the annealed and for the sensitized material (650°C for 1 hour).

The corrosion test consisted of 24 coupons in each vessel (vessel A-irradiated; vessel B-non-irradiated). The environment within each vessel consisted of J-13 water plus crushed tuff rock in the bottom of the vessel and water at the top. The specimens were arranged so that 12 of them (6 annealed and 6 sensitized) were in water + rock with the remaining 12 (again 6 annealed and 6 sensitized) in water only. The purpose of the water + rock was to embed the specimens in the crushed rock to enhance the possibility of any crevice-induced corrosion attack. The surprising result from the data in Table 2 is that the non-irradiated coupons showed higher corrosion rates than comparable irradiated coupons, although the amount of corrosion penetration was very small in all cases. The sensitizing heat treatment had no effect although as observed metallographically, the degree of sensitization was not very extensive with such short heating times.

2. U-Bend Irradiation-Corrosion Tests.

These tests involve stressed U-bend specimens of 304 and 304L in annealed and annealed-and-sensitized conditions at 50°C and 90°C. The tests are performed in two autoclaves, one at 50°C and one at 90°C, in a ^{60}Co irradiation facility at irradiation intensities of 6×10^5 and 3×10^5 rad/hr, respectively. Each autoclave is divided into three zones, viz., water + rock (bottom), rock + vapor (middle), and vapor only (top). Each zone contains duplicate U-bend specimens of 304 and 304L stainless steel, in both the solution annealed (15 minutes at 1050°C, air cool) and solution annealed and sensitized (600°C for 24 hrs) conditions. The U-bend specimens are mounted on an alumina rod with alumina spacers, and are insulated from the autoclave by means of a 1-inch wide strip of 30-mil mica sheet located at the non-stressed end of the specimens. With the rack in place, rock chips are added to cover the desired number (16) of specimens, i.e., two-thirds of the total number (24) in the autoclave and J-13 well water is added to cover one-third of the specimens. A temporary Tygon sight tube connected to the inlet fitting at the bottom of the autoclave is used to check the water level. Prior to insertion into the irradiation facility, the autoclaves are operated at full temperature for one or two days to verify the temperature profile. One thermocouple projecting into each of the zones is used for this purpose. Once the proper temperature profile is established, the sight tube

TABLE 2 Corrosion Test Results for Room Temperature Irradiated and Non-Irradiated 304L Coupons (8760 Hrs Exposure)

304L Stainless Steel Material Condition	J-13 Water Environment (28°C)	Corrosion Rates (μm/yr) Vessel A (Irradiated)	Vessel B (Non-Irradiated)
Solution Annealed	Rock + Water	Average: 0.0811*	0.242**
		Range: 0.0690-0.0951	0.215-0.272
		St'd Deviation: 0.00959	0.0201
Solution Annealed	Water	Average: 0.151	0.285
		Range: 0.0817-0.299	0.138-0.451
		St'd Deviation: 0.0734	0.118
Sensitized***	Rock + Water	Average: 0.123	0.249
		Range: 0.111-0.142	0.165-0.322
		St'd Deviation: 0.0114	0.0522
Sensitized	Water	Average: 0.116	0.283
		Range: 0.092-0.142	0.203-0.452
		St'd Deviation: 0.0470	0.0980

* Averages of 6 coupons in each set.

** Maximum localized penetration measured = 0.010 μm in 8760 hours (appx. 1 year).

*** "Sensitizing" heat treatment: 1 hour at 650°C.

is replaced with 0.125-in Inconel feed tubing and the autoclave is inserted into the access tube of the irradiation facility. The autoclaves are refreshed daily with 240 ml of air.

In all cases, the Topopah Spring tuff rock used was nominally 1/4-inch in the major dimension. The fines that resulted from the crushing operation were not discarded and rock chips were removed after each examination. The composition and mechanical properties of the 0.060-inch stainless steel sheet used in the manufacture of the U-bend specimens are presented in Table 3. U-bend specimens are stressed beyond the yield strength of the material. The stress level varies along the bent section and no strength-of-materials formula is available to calculate the stress at a given point, as is the case for a bent beam specimen. The self-loading nature of the U-bend permits its use in the small available working space in the irradiated autoclave.

The U-bend specimens in both the 50°C and the 90°C study have been examined after 3 months exposure. In the 50°C study, two specimen failures have been recorded: one after 1 month of exposure, and one after 3 months of exposure. Both specimens were sensitized 304, located in the vapor-only region of the autoclave. The 90°C study had a number of operational problems during its first month of operation, however these have been remedied and the test is in progress. After one month of exposure, two sensitized 304 specimens, both from the water + rock region, failed. The 3 month exposure inspection showed an additional two failures; both 304, one in the vapor-only region and one in the vapor + rock region of the autoclave. A summary of test results is given in Table 3.

Metallographic examination of the fractured specimens in both the 50°C and the 90°C tests revealed only intergranular stress corrosion cracking (IGSCC). An example is shown in Figure 5. Other than the failures noted, the specimens appeared to be in good condition, with no evidence of pitting or other forms of non-uniform attack.

3. Slow Strain Rate Tests.

In addition to the U-bend tests described above, the SCC resistance of 304L and 304 stainless steels was investigated by means of slow strain rate

TABLE 3 Stress Corrosion Cracking Test Results from U-Bend Specimens Exposed to Irradiated J-13 Water, Crushed Tuff Rock, and Water Vapor. Results After 3 Months Exposure.

No. of Specimens Cracked/No. of Specimens Tested

Material	Environment					
	50°C (6×10^5 rads/hr)			90°C (3×10^5 rads/hr)		
	Rock + Water	Rock + Vapor	Vapor	Rock + Water	Rock + Vapor	Vapor
304	0/4	0/4	2/4	0/4	3/4	1/4
304L	0/4	0/4	0/4	0/4	0/4	0/4

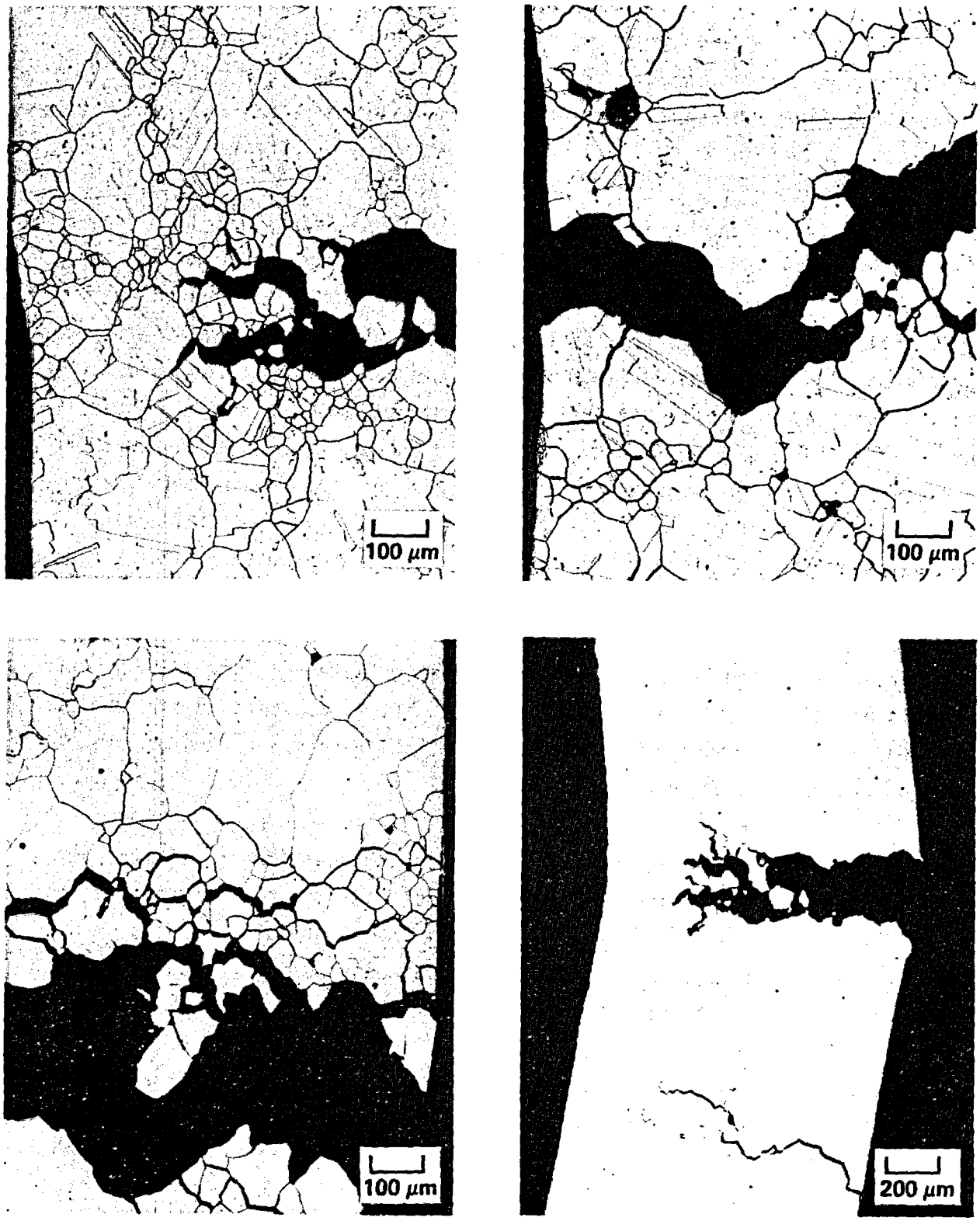

Fig. 5 Metallographic cross-sections of sensitized Type 304 U-Bend specimens showing IGSCC.

(SSR) tests. These tests were performed in air-sparged flowing J-13 well water, with a layer of crushed Topopah Spring tuff rock in the bottom of the autoclave. The water was pumped into the bottom of the autoclave at ~35 ml/hr on a once-through basis. Control tests were done in air only since gamma irradiation test capability was not yet available at the writing of this paper.

The compositions and mechanical properties of the 304L and 304 are presented in Table 4. The 304 was tested in the mill annealed condition and the solution annealed and sensitized condition (1050°C for 15 minutes, water quench followed by 600°C for 24 hours, air cool). The 304L was tested in two conditions: solution annealed (1050°C for 15 minutes, water quench) and solution annealed with a post annealing sensitization treatment (600°C for 10 hours, air cool). Although 750°C is the measured canister temperature, 600°C was selected to obtain severe sensitization. Because these are preliminary studies, the exact microstructural condition produced by waste emplacement is unknown. Therefore a multitude of microstructures are being examined, beginning with the worst case.

The results of the 304 tests are presented in Table 5. The mill annealed specimens had slightly lower ductility in the groundwater than in air at the low strain rate; however, the changes in ductility were slight and do not indicate a susceptibility to SCC.

The 304 specimens in the solution annealed and sensitized condition failed intergranularly with a significant drop in ductility when the strain rate was reduced from 10^{-4}/s to 1×10^{-7}/s in J-13 well water at 150°C. Cracks were found along the gage section of these specimens and the fracture surfaces showed clear evidence of intergranular fracture.

The results of the 304L tests are summarized in Table 6. Neither the solution annealed nor the solution annealed and sensitized specimens were susceptible to SCC under these test conditions.

TABLE 4 Compositions of Steel Plate Used in Slow Strain Rate Tests

304 STAINLESS STEEL

Alloying Element, percent

N	C	Mn	P	S	Si	Cr	Ni	Mo	Cu	Co
0.0480	0.054	1.44	0.019	0.009	0.39	18.07	8.20	--	--	--

YS: 47.3 ksi (326 MPa)
TS: 89.4 ksi (617 MPa)
El: 57.3%

304L STAINLESS STEEL

Alloying Element, percent

N	C	Mn	P	S	Si	Cr	Ni	Mo	Cu	Co
--	0.024	1.65	0.031	0.012	0.42	18.12	9.52	--	--	--

YS: 42.4 ksi (292 MPa)
TS: 81.1 ksi (559 MPa)
El: 58.5%

TABLE 5 Results of Slow Strain Rate Tests of 304 Stainless Steel at 150°C

Mill Annealed Specimens

Environment	Strain Rate	Reduction of Area, Percent	Elongation Percent	Yield Strength, ksi	Ultimate Strength, ksi
Air	10^{-4}/s	80.2	48.0	37.4	74.4
Air	$2x10^{-7}$/s	76.5	45.0	35.9	76.6
J-13[1]	10^{-4}/s	77.9	47.0	36.1	75.3
J-13	10^{-4}/s	79.6	46.0	36.3	74.9
J-13	$2x10^{-7}$/s	75.7	50.0	33.5	77.5
J-13	$2x10^{-7}$/s	76.4	47.0	35.1	77.0

Solution Annealed and Sensitized Specimens

Environment	Strain Rate	Reduction of Area, Percent	Elongation Percent	Yield Strength, ksi	Ultimate Strength, ksi
Air	10^{-4}/s	72.2	50.6	21.9	68.0
Air	10^{-4}/s	66.5	51.5	26.0	68.8
J-13	10^{-4}/s	75.5	53.5	23.5	68.8
J-13	10^{-4}/s	74.9	51.0	23.5	69.0
J-13	$2x10^{-7}$/s	50.9	-[2]	22.0	70.1
J-13	$2x10^{-7}$/s	26.4	-[3]	20.7	64.5

1 Air-sparged J-13 well water.
2 Not determined.
3 Broke at gage mark.

TABLE 6 Results of Slow Strain Rate Tests of 304L Stainless Steel at 150°C

Solution Annealed Specimens

Environment	Strain Rate	Reduction of Area, Percent	Elongation Percent	Yield Strength, ksi	Ultimate Strength, ksi
J-13[1]	10^{-4}/s	80.5	54.0	25.8	68.4
J-13	10^{-4}/s	78.4	52.0	27.1	68.2
J-13	2×10^{-7}/s	68.7	48.0	28.4	67.7
J-13	2×10^{-7}/s	72.9	46.3	26.7	68.2

Solution Annealed and Sensitized Specimens

Environment	Strain Rate	Reduction of Area, Percent	Elongation Percent	Yield Strength, ksi	Ultimate Strength, ksi
Air	10^{-4}/s	73.7	49.0	29.4	68.6
J-13	10^{-4}/s	72.2	49.6	-[2]	-[2]
J-13	10^{-4}/s	74.8	51.6	29.6	69.1
J-13	2×10^{-7}/s	76.0	49.0	26.6	68.8
J-13	2×10^{-7}/s	70.4	48.0	27.2	68.8

1 Air-sparged J-13 well water.
2 Not determined.

4. Bent Beam Stress Corrosion Tests.

An assembly of 72 four-point loaded, bent beam specimens (ASTM G-39) was loaded on each of several test fixtures which consist of 4 specimen racks (18 specimens per rack). The test was performed in tuff-conditioned J-13 water at 100°C and in saturated vapor above the water (9 specimens on each rack above the water line and 9 below the water line). The specimens (304L and 304) were stressed to 90% of the room temperature yield strength. The specimens were welded (gas metal arc process, full penetration, some intentional variation of argon, carbon dioxide, and helium in the shielding gas mixture), some given a post-weld anneal, and given a sensitizing treatment (700°C for 8 hours). The specimens were cold-worked 20% (multiple-pass, cross-rolled) to simulate a severe canister fabrication residual stress condition. The test matrix was constructed so that at least 3 replicated specimens of each metallurgical condition are exposed to the water and to the steam. The test conditions and specimen details are indicated in Table 7. An additional 36 specimens were loaded. These specimens were cold worked and welded but were not furnace heat treated. The specimens have been characterized metallographically and the welds have been radiographed. To date (September 1984), none of the bent beam specimens have cracked. The specimens are checked periodically (approximately every 1000 hours) for crack initiation.

Discussion

Coupon Tests (General and Localized Corrosion Susceptibility)

Recent weight loss test results (5000 hours exposure) indicate that 304L stainless steel coupons exhibit very low general corrosion rates in J-13 water in the temperature range 50-100°C.[12] The corrosion penetration rates ranged from 0.025-0.380μm/yr and appeared to be independent of the temperature, in the range tested. These corrosion tests followed ASTM G-1 and G-31 test procedures. Specimens were periodically removed from the test cells for observation and weight loss determinations. The trend of corrosion penetration rates showed a decrease with an increase in time. The tests have now attained more than 7500 exposure hours, with the trend toward the small end of the corrosion rate range.

TABLE 7 Status of Stress Corrosion Cracking Test Results For Four-Point Load, Bent-Beam Specimens Exposed to J-13 Water and Steam and Stress to 90% Yield Stress.

Material and Process Condition	Exposure Hrs	100°C J-13 Water No. Specimens Cracked/ No. Specimens Tested	100°C Steam No. Specimens Cracked/ No. Specimens Tested
304 - CWS*	4016	0/9	0/9
304L - CSW	4016	0/9	0/9
316L - CSW	4016	0/9	0/9
321 - CSW	4016	0/9	0/9
304 - COW*	2000	0/3	0/3
304L - COW	2000	0/3	0/3
316L - COW	2000	0/3	0/3
321 - COW	2000	0/3	0/3

*KEY

C = cold-worked, 20%
S = furnace "sensitized" (700°C for 8 hours)
W = double-pass welded
0 = acts as a placeholder for each of the above symbols

Examples: 304L CSW means that the plate or specimen is Type 304L stainless steel in the cold-worked, sensitized and welded condition.

--- 316L COW means that the plate or specimen is Type 316L stainless steel in the cold-worked and welded condition without any furnace heat treatment to produce a "sensitized" structure.

Weight loss tests have also been conducted on 304L and other stainless steel coupons in 100°C saturated steam formed from J-13 water and the measured corrosion penetration rates are in this same range. Similarly the other austenitic alloys (316L, 317L, 321, 347, and 825) also exhibit small corrosion rates under these environmental conditions. The corrosion pattern is uniform with only a slight tarnishing in intentionally creviced areas on the coupons. Electrochemical polarization curves were generated for the candidate stainless steels in J-13 water at different temperatures; analyses of these curves indicates general corrosion rates of the same magnitude as those determined from weight loss measurements. The polarization curves further confirmed the resistance of these materials to pitting and crevice corrosion. These results and test procedures are discussed in detail in Reference 14. A few tests performed in irradiated J-13 water and steam indicate that the general corrosion rate is not affected by the gamma radiation. These results were expected as the low halide content of the J-13 water (7 ppm Cl^-, 3 ppm F^-) should not favor pitting and crevice attack and that the mildly oxidizing environmental condition should favor formation and maintenance of protective passive films on the different stainless steels. The gamma radiation could even enhance the stability of the passive film by making the environment more uniformly oxidizing even in creviced areas. In fact, the one-year room temperature data indicated lower corrosion rates in irradiated J-13 water than in the unirradiated water. More testing in irradiated environment is planned to substantiate this explanation.

Stress Corrosion Test Results

All of the test results obtained to date (September 1984) indicate that 304L stainless steel exhibits resistance to stress corrosion cracking in aerated J-13 well water and in the aerated vapor produced from the J-13 water. The 304L also appears to be resistant to cracking in these environments when irradiated. No cracking has yet been observed on specimens of 304L which have been heavily cold worked, welded, and then furnace heat treated at times and temperatures to favor formation of a sensitized microstructure. The only specimens which have cracked are sensitized 304 U-bend specimens exposed in irradiated J-13 water and vapor. Comparably heat treated and exposed 304L U-bend specimens have not yet cracked after more than

5 months of exposure. The reason for including the sensitized 304 specimens was to force an early failure on a highly intergranular SCC (IGSCC) susceptible material and indicate the test sensitivity for distinguishing between resistant and susceptible material conditions. As long incubation periods may be required before SCC is initiated, especially in the expected relatively benign geochemical and geophysical environment of a tuff repository, the SCC tests will continue for considerably longer exposure periods.

Factors Which May Contribute to LTS

The long-term low-temperature exposure of the canisters will come from two sources: the natural cooling of the glass/waste mixture (DHLW and CHLW) and the continued generation of heat from the radioactive decay of the nuclear waste (all packages). While molten glass has been measured to cool below 300°C within 24 hours, as illustrated in Figure 1, the cooling may be somewhat slower when radioactive glass is present and simultaneously generating heat. Thermal exposures in the temperature range 400-500°C have produced LTS changes in 24 hours. After emplacement in the repository, generation of heat from the waste form combined with the rather poor thermal conductivity of the tuff rock will cause the canister surface temperature to rise. For 10-year old spent fuel, representative canister surface temperatures in the 200-250°C range are expected to develop. (Beside the age of the waste, the power loading, presence or absence of packing material, proximity to other packages, burn-up rate of spent fuel, waste package dimensions, and other factors will determine the actual temperatures). Subsequent cooling of the SF waste packages will be slow, and these canisters will remain at temperatures greater than 100°C for hundreds of years. Low temperature sensitization may therefore develop around the welds in a SF canister because of the residual cold work in the welded areas and the subsequent time-at-temperature developed over the canister surface after emplacement in the repository. Reduction of the canister temperature significantly lengthens the time before incubation of a sensitized microstructure.

The DHLW and CHLW pour canisters may be susceptible to development of a sensitized microstructure largely because of the residual stress resulting (1) from the differential thermal expansion during the glass pouring and cooling

and (2) from the high strain rates introduced during the upset resistance welding process to close the filled canister. Because of the lower thermal loading proposed for these waste packages, the expected canister surface temperatures which will develop after the repository emplacement are substantially lower than those for the SF packages. For the DHLW/CHLW packages, the maximum expected canister surface temperatures are on the order of 120-150°C. Overpacking the pour canisters with another stainless steel container reduces the vulnerability of the waste package to premature breaching by stress corrosion cracking along a sensitized microstructure. The outer container can be fabricated to be largely free of residual stress. Some residual stress will remain around the closure weld, but the lower surface temperatures expected to develop on the overpack surface should greatly reduce the possibility of low temperature sensitization.

A review of the literature indicates that type 304L stainless steel is susceptible to sensitization and LTS. Further, cold work plays an important role in determining the rate of LTS. The work of C. L. Briant, reported in Reference 15, shows that when specimens are stressed to near their ultimate tensile strength, no high temperature carbide-nucleating heat treatment was needed for LTS to occur. Although this amount of cold work is high in terms of the expected bulk deformation of nuclear waste canisters, it is possible to introduce a thin surface layer of cold work due to grinding or grit blasting. Moreover, some type of "abrasive cleaning" process is planned in the DHLW process to remove molten glass from the outside surface of the pour canister. While no comprehensive studies have been performed on the quantitative relationship between cold work and subsequent rate of LTS, severe cold work has been observed to bring about LTS-enhanced susceptibility to corrosion within the times and temperatures associated with the initial stages of nuclear waste storage. In addition, post-weld stress relief would increase the likelihood of carbide growth even before the glass-pouring operation.

Alternative Materials to 304L

Significant improvements in the long term resistance to sensitization, LTS, and corrosion can be achieved by modification of alloy composition and

*L = low carbon; N = high nitrogen.

fabrication. Compositional changes within the family of austenitic stainless steels is quite reasonable. Type 316LN* is an attractive candidate for several reasons. Localized martensitic transformations can be suppressed by adding molybdenum to austenitic stainless steels. This is highly important in view of the fact that carbon solubility is lower in martensite than in austenite. Thus, a martensitic transformation allows more carbon to become available for chromium carbide formation and subsequent sensitization to occur. Of importance during the expected time-temperature conditions developed after waste emplacement, nitrogen additions provide a poisoning effect on carbide precipitation by interfering with carbon diffusion. Over longer times, once the canister is relatively cool, nitrogen provides added strength. In addition, secondary phases which precipitate at elevated temperatures, e.g., laves, z-phase, and Chi phase, contain no nitrogen and would thus be no more likely to form than in Type 304L.[14] The lowest possible carbon content is always desirable when sufficient nitrogen is available to stabilize the austenitic structure.

Regardless of the material finally selected for nuclear waste containers, homogeneity of the material is of concern.. For example, banding or ferrite stringers in the original ingot could result in compositional variations in the final canister product which may produce sensitization or phase instability. Tighter process controls and sophisticated melting techniques such as vacuum induction melting (VIM), vacuum arc remelting (VAR), and electroslag remelting (ESR) improve the homogeneity of the material. Process specification aimed at producing a more uniform and homogeneous product will be pursued if future testing indicates tendencies of conventionally produced stainless steels to show localized corrosion attack.

Future Work

Many of the tests reported above (irradiated U-bends, 4-point load bent-beams) will continue to gain additional exposure hours as the initiation phase in stress corrosion cracking is often the slowest step. A complete characterization of the possible degradation of mechanical properties of the reference material in the J-13 well water and steam environment is planned for the future. An overall assessment of material behavior will be obtained using slow strain rate tests, fracture mechanics tests (K_{ISCC}) and possibly

low-cycle tension-tension corrosion fatigue tests on pre-cracked specimens, under non-irradiated and some irradiated conditions. The focus of the fracture mechanics tests is to predict crack growth rates under a given set of loading and environmental conditions. Decreasing load tests will be performed to determine K_{ISCC} (the threshold stress intensity above which SCC occurs). In order to develop baseline information, preliminary tests will be run using heavily sensitized material. As a compliment to these tests, a series of constant K tests will be run at various stress intensity levels. This data will be used to generate crack growth rate information over a range of stress intensity levels. A key link between the irradiated and non-irradiated is to determine the change in corrosion potential between the environments and how this potential relates to a "critical" potential above which stress corrosion occurs.

The materials reported herein are well characterized at elevated temperatures by relatively short term tests. The slow strain rate and fracture mechanics tests will focus on material behavior over extended periods of time. This will allow time for potentially harmful microstructural features to manifest themselves under realistic conditions, e.g., 100°C, J-13 water/vapor, and eventually irradiation. For example, the high temperature sigma phase produced during prior heat treatment may embrittle the material enough to cause cracking in the low temperature range. In addition to yield and ultimate strength data, the slow strain rate tests will provide the opportunity to visually determine (via SEM and TEM) whether strain-induced or stress-assisted martensite has formed. High-resolution TEM can reveal sub-micron carbide particles. The fracture mechanics tests will provide slow crack growth studies and crack growth rate data in sensitized material in a J-13 environment. Baseline studies on unsensitized material will also be performed; however, the conservative approach using the sensitized condition will remain the focus of the study. The reason for this is to establish which environmental conditions <u>will</u> cause cracking in the stainless steel and then to determine at what probability level such an environmental conditions would occur. This analysis will form the basis on establishing the population of canisters which would breach in a certain period of time. The values of K_{ISCC} obtained from these tests predict the lowest stress intensity level which will allow stress corrosion cracks to grow in J-13 water or steam. The

results of stress analyses may then be compared with K_{ISCC} values determined in the laboratory.

A separate study on high temperature second phase identification will also be conducted. The nucleation and growth of these phases will be correlated with mechanical deformation, prior heat treatment, and alloy composition.

Acknowledgments

The U-Bend Irradiation Corrosion and Slow Strain Rate Tests were performed under sub-contract at Pacific Northwest Laboratories (PNL). We wish to thank principal investigators R. E. Westerman and S. Pitman of PNL for their contributions to this paper. We also appreciate our fruitful discussions with consultant, M. J. Fox, and with C. L. Briant and P. L. Andresen of General Electric Corporation Research and Development.

References

1. Oversby, V. M., 1984, "Reference Waste Form and Packing Material for the Nevada Nuclear Waste Storage Investigations Project," Lawrence Livermore National Laboratory Report UCRL-53531.

2. Oversby, V. M., 1984, "Reaction of the Topopah Spring Tuff with J-13 Well Water at 90°C and 150°C," UCRL-53552.

3. Dudley, W. W. and B. R. Erdal, 1982, "Site Characterization for Evaluation of Potential Nuclear Waste Isolation at Yucca Mountain, Nevada," Proceedings of the 1982 National Waste Terminal Storage Program Information Meeting, p 10, DOE/NWTS-30.

4. Montazer, P. and W. E. Wilson, "Conceptual Models for Flow Through the Unsaturated Zone at Yucca Mountain, Nevada," USGS Water Resources Investigations Report, 84 (in review).

5. Baxter, R. G., 1981, "Description of DHLW Reference Waste Form and Canister," E. I. Du Pont de Nemours and Co., Savannah River Laboratory Report DP-1601.

6. LaQue, F. L. and H. R. Copson, editors, 1963, Corrosion Resistance of Metals and Alloys, 2nd ed., Ch. 15, Reinhold Publishing Co., New York.

7. McCright, R. D., H. Weiss, M. C. Juhas, and R. W. Logan, 1983, "Selection of Candidate Canister Materials for High Level Nuclear Waste Containment in a Tuff Repository, Lawrence Livermore National Laboratory Report UCRL-89988.

8. Andresen, P. L., et al., 1981, "Basic Studies on the Variabilities of Fabrication-Related Sensitization Phenomena in Stainless Steels," EPRI Final Report NP-1823.

9. Povich, M. J., 1976, "Low Temperature Sensitization of Type 304 Stainless Steel Pipe," General Electric Company Class 3 Internal Report MOR-76059.

10. Povich, M. J. 1978, "Low Temperature Sensitization of Welded Type 304 Stainless Steel," Corrosion, 34, p. 269.

11. Povich, M. J., 1978, "Low Temperature Sensitization of Type 304 Stainless Steel," Corrosion, 34, p. 60.

12. Glass, R. S., G. E. Overturf, R. E. Garrison, and R. D. McCright, 1984, "Electrochemical Determination of the Corrosion Behavior of Candidate Alloys Proposed for Containment of High Level Nuclear Waste in Tuff," Lawrence Livermore National Laboratory Report UCID-20174.

13. Logan, R. W., 1983, "Computer Simulation of Sensitization in Stainless Steels," Lawrence Livermore National Laboratory Report UCID-20000.

14. Hall, E. L. and C. L. Briant, Met Trans. 15A May 84, p. 793.

15. Fox, M. J. and R. D. McCright, 1983, "An Overview of Low Temperature Sensitization," Lawrence Livermore National Laboratory Report UCRL-15619.