Rec'd with letter dtd. 2/18/94

U.S. NUCLEAR REGULATORY COMMISSION
DESIGN REVIEW OBSERVATION REPORT 94-01
FOR THE 90% DESIGN REVIEW OF DESIGN PACKAGE 2B
FOR THE EXPLORATORY STUDIES FACILITY

2/17/94
William L. Belke
Repository Licensing and Quality
Assurance Project Directorate
Division of High-Level Waste Management

2/17/94
For Shiann-Jang Chern
Geology and Engineering Branch
Division of High-Level Waste Management

Reviewed and approved by: 2/17/94
Mysore S. Nataraja
Geology and Engineering Branch
Division of High-Level Waste Management

Reviewed and approved by: 2/18/94
Joseph J. Holonich
Repository Licensing and Quality
Assurance Project Directorate
Division of High-Level Waste Management

1028

9403140386 940218
PDR WASTE
WM-11 PDR

1.0 INTRODUCTION

During January 5-7, 1994, in Las Vegas, Nevada, members of the staff of the U.S. Nuclear Regulatory Commission, Division of High-Level Waste Management observed a U.S. Department of Energy (DOE), Office of Civilian Radioactive Waste Management 90 percent design review of the Exploratory Studies Facility (ESF) Title II Design, Subsurface Facilities, Package 2B, "North Ramp Studies, Analyses and Specifications." Package 2B included North Ramp procurement studies for muck storage, excavation methods, ESF ventilation, surface conveyor system, drawings and specifications for precast concrete invert segments, rail haulage systems specifications, tunnel boring machine (TBM) platform specifications, and communication specifications.

2.0 OBJECTIVES

The scope and objectives of the DOE design review are stated in Attachment 2, "90% Design Review Package 2B Presentation Material." The general purpose of this review is to help the Civilian Radioactive Waste Management System Management and Operating Contractor (M&O) and DOE managers and other interested parties assess whether the ESF design is technically correct and if it is in compliance with the project objectives. The objectives of NRC staff observations of design reviews are to gain confidence that designs are technically acceptable, DOE's design review is effective, and that DOE and its contractors and subcontractors are implementing appropriate controls in the design process. Observation of the 90 percent design review by the NRC staff does not constitute an in-depth design review or imply NRC acceptance of the design.

3.0 SUMMARY AND CONCLUSIONS

For this review, the NRC staff provided verbal and documented comments on the programmatic and technical aspects of the design, design control process, Determination of Importance Evaluation (DIE), and conduct of the design review. The NRC staff also provided comments related to Package 2B based on the sample of the preliminary predecisional design package reviewed during the time available and the technical expertise of the NRC staff members. NRC staff programmatic and technical comments are summarized in Section 5.2 below.

The design review was enhanced by receiving a preliminary predecisional copy of the design package two weeks in advance which allowed time for review and to prepare meaningful comments. The designers presented detailed overviews to the reviewers and observers during a three day meeting. During most of the presentations numerous questions were asked, which at times led to lengthy discussions. Consequently, little time remained to meet with DOE and M&O personnel for discussion and possible resolution of comments in their respective areas of interest until late in the afternoon the last day of the review.

The NRC staff based its evaluation of the technical adequacy on the Review Criteria in Section 9 of the Management and Independent Technical Review Plan (MITRP) which was included as part of the preliminary predecisional design package. For programmatic adequacy, the NRC staff based its evaluation on the requirements of the DOE Quality Assurance Requirements and Description document (DOE/RW-033P, Revision 0, December 18, 1992). When

an item or activity was identified by the NRC staff that did not appear to meet programmatic or technical criteria, it was presented (as established during the opening remarks on the first day of the design review) to the designated M&O point of contact for the observers.

Some of the programmatic and technical issues raised were resolved during the particular presentation. However, because of the limited time, it was not possible to address some NRC staff comments. These comments are listed below in Section 5.2 of this report, classified as General Programmatic or Specific Technical Comments. The General Comments were provided to the designated M&O point of contact early on the second day of the design review and the finalized technical comments on the last day of the review. Representatives of the Nuclear Waste Technical Review Board and the State of Nevada indicated they did not have any problems with the NRC staff comments. Based on the sample of the design package reviewed during the time available, NRC staff did not identify any major design flaws.

The revised design review process is a definite improvement over the previous process. Reviewers and observers had two weeks to review the design document and provide comments. Observers also had the opportunity to discuss the review comments with reviewers and oversee the design review process. Many minor and editorial comments and other misunderstandings were easily resolved. However, there was insufficient time for the reviewers and observers to discuss their comments with the designers.

The design package presentation process was also improved. The DOE/M&O presentations broke the design package into many design items. Each design item had a detailed written report. The level of detail for design package presentation was adequate; however, there was no discussion to address how the design items tie into a design system. For example, DOE should provide a brief integration summary to address which design items are included in a design system. The rationale, flow chart, and studies that lead to the final selection for the design items should also be discussed. Without an integration overview, the NRC staff observers could not judge how the design integration was performed.

4.0 PARTICIPANTS

William Belke, Shiann-Jang Chern, John Gilray (part time) and Mikko Ahola (Center for Nuclear Waste Regulatory Analyses) served as observers for the NRC. The attendees, affiliations, and titles, from the first day of the review are listed in Attachment 1 to this report.

5.0 OBSERVATION OF THE DESIGN REVIEW

5.1 Scope of the Design Review

The scope of the design review is defined in Section 3 of MITRP. The scope of this review is limited to design output documents, i.e., design drawings, design specifications, and design analyses produced as part of Package 2B. Review objectives were to ensure technical adequacy, and compliance with project requirements, federal, and state regulations. Applicable procedures

and review criteria for the design review were supplied in the MITRP.

5.2 Conduct of Design Review

Package 2B includes the North Ramp studies, analyses, and specifications; including a muck storage study, excavation methods study, and ESF ventilation study. The specifications included ESF ventilation system procurement specifications, subsurface conveyor system concrete drawings and specifications, rail haulage system procurement specifications, TBM mapping platform procurement specifications, and communication system specifications. DOE supplied each reviewer/observer with a set of preliminary predecisional Package 2B draft material including the MITRP, Reviewer's Handbook, Basis for Design, calculations, analysis, DIE, drawings, and specifications. A complete list of the documents included in the Package 2B design review is given in Section 6.0 of this report.

Most of the comments raised by the reviewers are related to the design of temporary items, which may not be the main interest of the NRC staff. Many DIE reports were unavailable. DIE reports address the design impact on the waste isolation, radiological safety, and obtaining useful site characterization data, and therefore, are a main interest of the NRC staff.

The reviewers questioned the use of non-standard engineering practices. For example, a triple braking system was used in the design of rail cars, which is not an Occupational Safety and Health Administration (OSHA) standard engineering design. The air quality measurement system designed for the excavation was too complicated, and again, was not in accordance with standard engineering practice. Reviewers stated that the M&O may not understand the complexity that is being introduced into the design. The above problems may have an impact on the cost and schedule for the ESF site characterization. It is not clear whether the NRC staff should have a particular interest in this issue. However, some of these issues may eventually have an impact on issues of interest to the NRC staff.

The reviewers also questioned the lack of evaluation of other design options. For example, the ventilation system was designed to use a 66 inch diameter duct pipe. The alternative study to use two smaller pipes to provide a flexible design was not considered. Another example was that the alternative study of the use of water versus chemicals to be used in the subsurface fire protection system was not conducted.

General Programmatic Comments

- At the opening meeting and subsequent meetings during the design review, there was minimal attendance by DOE representatives other than QA personnel. Since DOE has ultimate responsibility for the nuclear waste repository and in view of the concerns expressed in the August 20, 1993, letter from B. J. Youngblood to D. Shelor, DOE should consider taking a more active interest and role in the design reviews.

- There appeared to be an overall lack of integration and interaction between the M&O and the contractors that will be involved in the construction and other activities associated with the Design Package 2B. Several of the contractors indicated that they requested early involvement in the design process instead of limiting their involvement to the 90 percent review stage. Another example appears to be where the TBM excavation, mapping platform, and ventilation system were designed by three separate teams, with the level and degree of integration among the three teams being questioned by the design reviewers. The NRC staff believes that in the future, the M&O should involve potential contractors early enough in the design process to better utilize their expertise and experience in developing a high quality product.

- Based on the content and substance of the questions from the reviewers and the responses from the presenters/designers, the NRC staff had the impression that the design team did not totally possess the necessary background and experience for certain aspects of the design for the development of Package 2B. It would have been beneficial to have a brief summary of each designer's background and experience readily available to verify the design team's expertise for this aspect of the design.

- The NRC staff found it particularly confusing that at the 90 percent design review stage, over 50 percent of the items and activities for Package 2B are still under evaluation for determining whether they are important to radiological safety (IRS) or important to waste isolation (ITWI). When a design is almost completed, it would appear prudent that designers should have supportive evidence based on definitive technical evaluations to determine whether the item or activity is IRS or ITWI. It was explained that Package 2B involves procurement studies and that the items procured are temporary, can be purchased as commercial items, and if any quality application is necessary, the item will be repaired or upgraded. It was further explained that the final determination will be accomplished in Design Package 2C scheduled for 90 percent design review in March 1994. The NRC staff finds this condition to be problematic.

- During the presentations, several documents were discussed such as the ESF Technical Baseline (YMP/CM-0016), ESF Technical Data Base, Reference Information Base, and DIE. These documents were not previously discussed or explained at Technical Exchanges/Meetings as to how they fit into the overall document hierarchy. The document hierarchy issue was raised during the October 4-5, 1993, DOE/NRC Technical Exchange in Las Vegas, Nevada, and again at the December 8, 1993 DOE/NRC Technical Meeting in Washington, D.C. The NRC staff believes that a clearer explanation of the document hierarchy is necessary in order for the NRC staff to better understand the design process.

Specific Technical Comments

- Lack of DIE analysis report: In Design Package 2B, the ESF excavation study report concluded that the controlled drilling and blasting method will be used to excavate the test alcoves. However, the DIE report has not been completed. The mining calculation report, Volume 2 has a DIE section, but it only states that a DIE will be performed to evaluate the impact on waste isolation and radiological safety aspects of ESF excavation. How the excavation method impacts the test interference was not clearly addressed. DOE/M&O stated that excavation effects on tests will be analyzed and will be included in the "important to waste isolation" portion of the DIE report. The DIE is prepared by the performance assessment scientists. The test interference will be evaluated by the site investigation scientists. It was unclear what interaction took place between DOE and M&O to coordinate site investigation and performance assessment personnel to produce the DIE report. One DIE report related to a temporary item was mailed late to the NRC, but there was no time for a review. M&O stated that DIE report of ESF excavation study will be included in the Design Package 2C.

- Lack of integration among the design packages: For example, rubber tire transportation was considered in Design Package 1A and rail car transportation was considered in the Design Package 2B. It was unclear how the two packages were integrated by the M&O/DOE to reconcile the differences.

- Lack of documented verification for excavation studies: The controlled drilling and blasting method will be used in secondary excavations such as test alcoves. The ESF Design Requirements document requires that blast-induced changes to average in-situ permeability of the rock beyond one half tunnel diameter shall be no greater than one order of magnitude. However, the M&O does not report a method to verify that the controlled drilling and blasting excavation method meets this requirement.

- Other design considerations: 1) BFD states that 0.3g ground acceleration should be used in the seismic design of temporary items and 0.4g ground acceleration should be used for permanent items. However, Design Package 2B uses 0.4g for the temporary items. Although, this design might be conservative, the rationale for the deviation from the BFD should be provided. 2) The north ramp penetrates through different geologic formations. A single rock bearing capacity was used for the invert segment section design calculation. An explanation should be provided if the chosen value is representative of the different rock conditions.

6.0 LISTING OF DOCUMENTS AVAILABLE FOR REVIEW

The following documents were available for examination as part of the observation of Design Package 2B:

General

- Determination of Importance Evaluation
- Basis For Design
- Other Documents (Summary of Work; Submittals; Contractor QA; Material and Equipment)

Mining

- Drawings
- Specifications (Subsurface Railroad Trackwork; Subsurface Railroad Turnouts, Rail Cars; Trolley/Battery Locomotives; Subsurface Diesel Locomotives)
- Calculations (Excavation Methods Study; Muck Storage Study; General Arrangement - Invert Segment; General Arrangement of Trolley Line System; Locomotive and Rail Car Analysis)

Structural

- Drawings (Bend Tower & Bend #1 Foundation plans; Transfer Tower Foundation Plan; Rail Placement Invert Segments A, Sections, Plan, and Details; Rail Placement Invert Segment B, Sections, Plan, and Details)
- Specifications (Foundations, Excavation and Backfill - Subsurface; Drilled Concrete Piers; Concrete Framework - subsurface; Concrete Reinforcing - Surface; Cast in Place Concrete - Subsurface; Precast Concrete; Equipment and Structural Support Base Plate - Grout - Subsurface; Additional Training Floor with Geologic Mapping Gantry)
- Specifications (ESF Subsurface Vane Axial Ventilation Phase; ESF Ventilation Duct and Fittings)
- Calculations (Subsurface Ventilation Analysis - Construction Phase; Subsurface Fire Protection Design Analysis; Subsurface Fire Hazards Analysis; Subsurface Wastewater Analysis; Compressed Air Distribution Analysis)

Electrical

- Drawings (Subsurface Electrical Notes & Legend P&ID; Surface Muck Conveyors P&ID Sheet 1; Surface Muck Conveyor P&ID Sheet 2; Construction Process and Firewater Chemical Tracer Injection P&ID; Subsurface Life Safety & Monitoring Equipment P&ID Sheet 1; Subsurface Life Safety & Monitoring Equipment P&ID Sheet 2; Subsurface Muck Conveyors P&ID Sheet 1; Subsurface Muck Conveyors P&ID Sheet 2; Subsurface Ventilation System P&ID Sheet 1; Subsurface Ventilation System P&ID Sheet 2; Subsurface Fire Protection P&ID Sheet 1;

Subsurface Fire Protection P&ID Sheet 2; Compressed Air Chemical Tracer Injection System P&ID; Subsurface Security/Communication Flow Diagram; Subsurface Electrical Notes & Legend Lighting & Power; Integrated Control System Logic Diagram Sheet; Control & Monitoring System Block Diagram)

- Drawings Submitted only as Reference Material (Subsurface Electrical Notes & Legend Single Line Diagram; Subsurface Main& North Portal Switchgear Single Line Diagram; Subsurface TS Tunnel Substations Single Line Diagram Sheet 1; Subsurface TS Tunnel Substation Single Line Diagram Sheet 2; Subsurface TS Tunnel Substation Single Line Diagram Sheet 3; Subsurface TS Tunnel Substation Single Line Diagram Sheet 4)

- Specifications (Subsurface Monitoring and Warning System; Subsurface Electrical Trolley System; Integrated Control System)

- Specifications Submitted only as Reference Material (Package Mechanical Equipment; Low Voltage Motor Starters)

- Calculations (Electrical Subsurface Short Circuit Analysis; Electrical Subsurface Voltage Drop Analysis; Electrical Subsurface Grounding Analysis; Electrical Subsurface Load Analysis; Metal Clad Cable Code Review)

Attachment 1

	NAME (PLEASE PRINT)	COMPANY	TITLE
1	Richard J. Fournier	M&O	Review Secretary
2	JOHN W. PETERS	M&O	PRINCIPAL MINING ENG'R
3	Alden Segarest	M&O	MGDS Development Manager
4	William BELKE	PRC	SR. QA ENG'R.
5	SHIANN-JANG CHERN	USNRC	Geotechnical Engr.
6	SIRO ROMANOS	M&O	STRUCTURAL
7	Ron Jarriel	M&O	RAM Engineer
8	JOHN MEDER	NEV. LEGIS COUNSEL BUREAU	RESEARCH ANALYST
9	NANCY J. CHAPPELL	M&O	LICENSING ENGR.
10	James E Friant	Excavation Engineering	Project
11	Randy Leonard	DOE/NV LV	R&D/Licensing
12	Nancy Oh		
13	E J Piesenhausen	CLARK COUNTY	ENG. SPEC
14	D. ZERGA	WESTON	ANALYSIS & VERIFICATION.
15	N T SIMMS	M&O	REG/LICENSING
16	S D Bailey	M&O	MGDS Devl.
17	JEN ASHLOCK	M&O	MGDS Requirements
18	ROBERT HARPSTER	QATSS CLR	QA
19	MIKIKO ATORA	CNWRA	
20	Joe Willis	M&O	QA
21	Richard Kanitch	LANL	Testing
22	Gene Pokorny	REECO	Construction
23	Ken Herold	M&O	ESF Subsurface
24	BILL JACOBS	SAIC	ENVIRONMENTAL

90% DESIGN REVIEW FOR PACKAGE 2B

JANUARY 5, 1994

	NAME (PLEASE PRINT)	COMPANY	TITLE
25	JUAN BELEDRA	MK M&O	STRUC. ENGINEER
26	R.L. Bullock	RSN	Technical Advisor
27	R. L. Mundell	USBM	" "
28	J. L Naef	MK	ESF Subsurface Design Supvr
29	ROBERT S SAUNDERS	MK M&O	ESF SUBSURFACE DESIGN
30	Paul McKie	MK	Subsurface Design Mgr.
31	David Rasmussen	M&O	O&M Eng.
32	DAVID BARRERES	M&O/FD	ESH/FIRE PROTECTION
33	RE Smith	M&O/WCFS	Prime. Eng.
34	DAN McKENZIE	M&O/MK	PROT ENGR.
35	NICK STELLATO	Lyle Co	ON Site Rep
36	EARL GAUN	INYO County	MINING ENGINEER
37	Gary Terasoka	M&O/TRW	Systems Engineer
38	JAIME GONZALEZ	DOE	ENGINEER
39	YURI D. SHANE	M&O F/D	EE
40	Jim GRUBB	STATE	OBSERVER
41	MATT GOMEZ	M&O/FD	STRUCTURAL
42	Bill Law	M&O/Vienna	Sys Engr
43	DON BUXTON	M&O/Vienna	Sys Eng
44	TONY BUI	M&O/FD	MECH ENGR.
45	WILLIAM H. HANSMIRE	KLEINIT/AB	ENGINEERING MANAGER
46	DENNIS BECHTEL	CCRAFTCO NV	COORDINATOR - NUCLEAR WASTE DIV
47	JAMES R. BEYER	M&O	ESF PROJECT ENGINEER
48	R.G. VAWTER	M&O	DEP SITE MGR.

	NAME (PLEASE PRINT)	COMPANY	TITLE
49	K. McFARLAND	NWTRB	STAFF
50	DANIEL L. KOSS	REECO.	ASS't DIV. MGR.
51	RALPH DRESER	M&O	Const Mgmt
52	EDGAR EBERHARD	M&O	ELECTRICAL SUBSUR.
53	ROBERT WHITE	DOE	HVAC
54	ALBIN BRANDSTETTER	M&O	PA Staff
55	HANIL OSTERHOUT	M+O	INSTITUTIONAL
56	JIM ROBERTSON	M&O	SPEC ENG
57	PETER HASTINGS	M&O	SYS ENGR / DIES
58	PMilleighbeks.	Nev-State.	Assembly [illegible] -36
59	Pierre Morcet-Jones	MSM/UNR	Professor.
60	John Gilray.	NRC.	On-site Rep
61	Steve Daro	YMIGRD	QE lead
62	Lance deSteolinski	Kiewit/PB	Project Manager
63	Russ Baumeister	DOE	Sit
64	DAVE LANGQUIST	MK	
65	Gary Cary	SAIC	ENVIRONMENT
66	Tom Fitch	Nev	Senator
67	Bernard J. Verne	DOE	Engineer
68	Robert W. Kid	M+O	Engineer
69	Levent Ozdemir	CSM	Professor
70	NED Z. ELKINS	LOS ALAMOS	DEPUTY TPO
71	Hemman N. Kalia	Los Alamos	Project Leader
72	LES BRADSHAW	Nye County	Proj. Mgr.

	NAME (PLEASE PRINT)	COMPANY	TITLE
73	Deirdre M. Bock	LANL	Engineer
74	Charles Garrett	M&O	Engineer
75	Jeff Steichoff	M&O	Staff Engr.
76	Robert A. Skoreeth	M&O	Subsurface Engineer
77	Donald F. Vanica	M&O	Principal Engr
78	Leslie R Eisler	M&O	Human Factors/Safety Eng
79	Jon M. White	DOE	Engineer.
80			
81			
82			
83			
84			
85			
86			
87			
88			
89			
90			
91			
92			
93			
94			
95			
96			
97			
98			
99			
100			
101			

Attachment 2

90% DESIGN REVIEW

PACKAGE 2B

PRESENTATION MATERIAL

U.S. DEPARTMENT OF ENERGY

OCRWM

YUCCA MOUNTAIN

YUCCA MOUNTAIN
SITE CHARACTERIZATION
PROJECT

DOE PERSPECTIVE OF THE EXPLORATORY STUDIES FACILITY (ESF) 90% DESIGN REVIEW - PACKAGE 2B TITLE II

PRESENTED BY

JAMES M. REPLOGLE

EFS BRANCH CHIEF

ENGINEERING & DEVELOPMENT DIVISION

JANUARY 5, 1994

2B 90% DESIGN REVIEW MEETING AGENDA
Wednesday, January 5, 1994
Holiday Inn, Emerald Room

TIME	TOPIC	PRESENTER
8:30a	WELCOME	R.G. VAWTER
8:35	INTRODUCTION	W.D. SCHUTT
8:40	OPENING REMARKS	J.M. REPLOGLE
9:00	REVIEW AGENDA AND SCOPE	W.D. SCHUTT
9:15	REVIEW PROCESS	R.J. FOURNIER
9:30	BREAK	
9:40	ESF BASELINE AND REQUIREMENTS FLOWDOWN	M.S. RINDSKOPF
10:15	BASIS FOR DESIGN DOCUMENT	J.W. PETERS
10:30	DETERMINATION OF IMPORTANCE EVALUATIONS	P. S. HASTINGS
10:45	ENVIRONMENTAL ISSUES	E. W. MCCANN
11:00	TEST FUNCTIONS	R.D. OLIVER
11:15	ESF LAYOUT - CURRENT AND PROPOSED	D.G. MCKENZIE
11:30	LUNCH	
1:00p	SUBSURFACE TECHNICAL PRESENTATIONS	P.W. MCKIE
1:15	OVERVIEW - DESIGN PACKAGE 2B	J.L. NAAF
1:30	SUBSURFACE PRESENTATION	R.S. SAUNDERS
4:30	SUBMIT COMMENTS FOR SUBSURFACE	
5:00	ADJOURN	

Thursday, January 6, 1994
Room 450, Bank of America Building

8:00a	MECHANICAL PRESENTATION	D.F. VANICA
11:00	SUBMIT COMMENTS FOR MECHANICAL	
11:30	LUNCH	
1:00p	ELECTRICAL/INSTRUMENTS & CONTROLS (I&C)	W. REED
4:00	SUBMIT COMMENTS FOR ELECTRICAL/(I&C)	
4:30	ADJOURN	

Friday, January 7, 1994
Room 450, Bank of America Building

9:00a	STRUCTURAL PRESENTATION	K.J. HEROLD
10:00	SUBMIT COMMENTS FOR STRUCTURAL	
10:30	DIE DISCUSSION AND COMMENTS	P.S. HASTINGS
11:30	LUNCH	
1:00p	BFD/GENERAL TOPICS DISCUSSION	J.W. PETERS
3:00	SUBMIT ALL REMAINING COMMENTS	
5:00	ADJOURN	

SCOPE OF ESF

PROPOSED DESIGN/CONSTRUCTION/TEST PHASES

* 1A. Site preparation and partial portal of North Ramp
1B. Surface facilities at North Portal
2. North Ramp from portal to Topopah Springs (TS) level
3A. Site preparation and partial portal of South Ramp
3B. Surface facilities at South Portal
4. South Ramp from portal to TS level
5. North Ramp from Calico Hills (CH) turnout to CH level
6. South Ramp from CH turnout to CH level
7. Exploration drifts at CH level
8. Exploration drifts at TS level
9. Main test area at the TS level
10. Shaft at north end: Surface to TS level

* Not necessarily the order of construction

U.S. DEPARTMENT OF ENERGY

OCRWM

YUCCA MOUNTAIN

YUCCA MOUNTAIN
SITE CHARACTERIZATION
PROJECT

90% DESIGN REVIEW - DESIGN PACKAGE 2B

OPENING REMARKS

PRESENTED BY
JAMES M. REPLOGLE
794-7929

DEPARTMENT OF ENERGY · UNITED STATES OF AMERICA

JANUARY 5, 1994

ESF PACKAGE 2

(CONTINUED)

- **Design Package 2B**
  - Muck Storage study
  - Excavation Methods study
  - ESF Ventilation study
  - ESF Ventilation System procurement specifications
  - Surface conveyor system concrete drawings and specifications
  - Rail Haulage System procurement specifications
  - TBM Mapping Platform procurement specifications
  - Communications System specifications

ESF PACKAGE 2

- Design has been split into three subsets (2A, 2B, and 2C)
- Design Package 2A
  - North access surface and subsurface conveyor procurement specifications and general arrangement drawings
  - Electrical switchgear, transformers, and power center procurement specifications for support of TBM operations
  - One-line drawings for support of TBM operations
  - Drawings and specifications for the TBM launch chamber
  - Transportation System study

EXPLORATORY STUDIES FACILITY

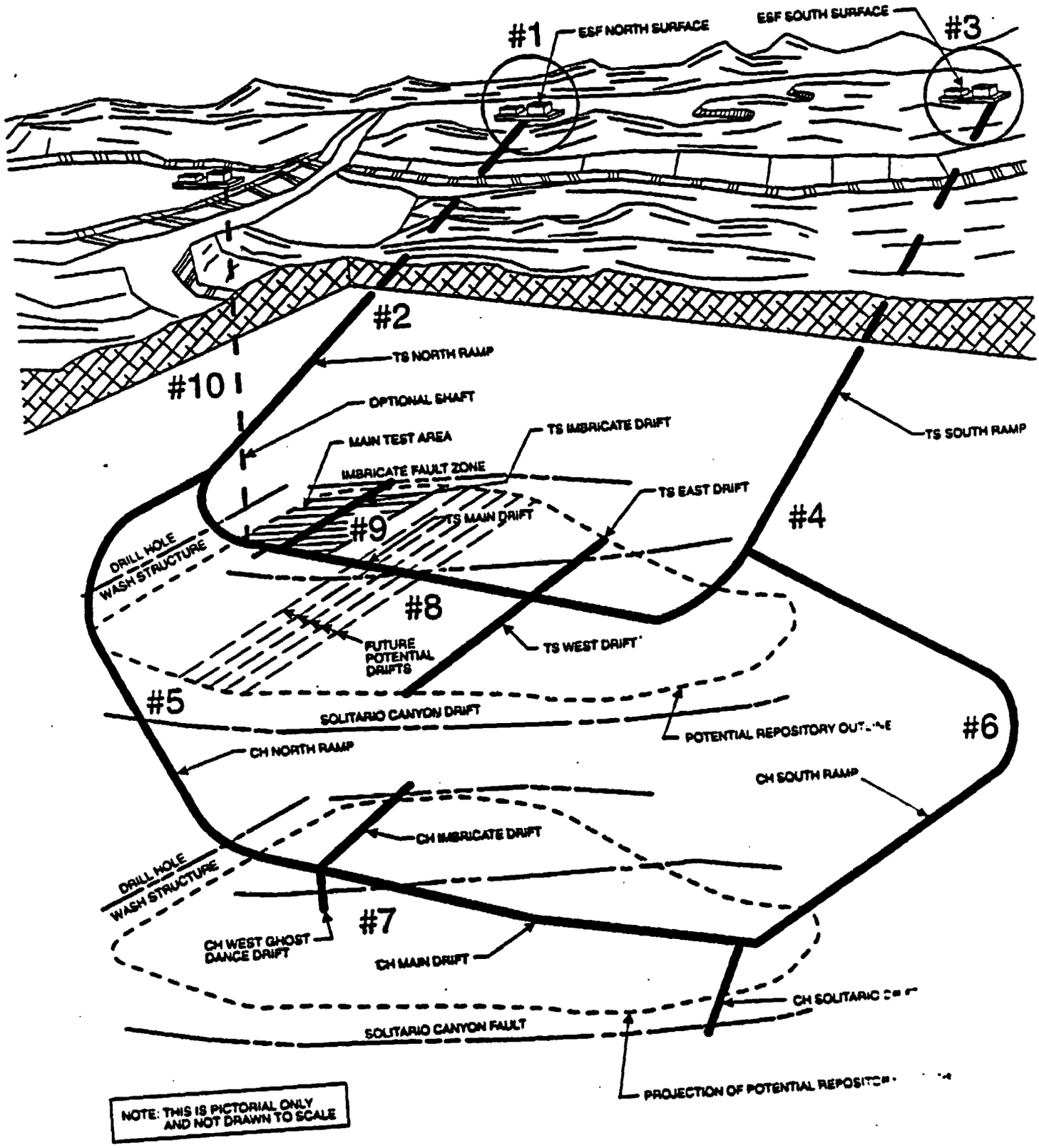

ESF PACKAGE 2

(CONTINUED)

- **Design Package 2C**
  - North ramp excavation and ground support design from TBM launch chamber at the Bow Ridge Fault to the TS level
  - Utility System Drawings
  - Electrical System procurement and installation drawing and specifications
  - Instrumentation drawings and specifications
  - Utility System procurement specifications
  - Ventilation System drawings and specifications
  - Rail Haulage System installation drawings and specifications
  - Balance of miscellaneous subsurface concrete and structural steel drawings and specifications required for conveyor, ventilation and utility systems

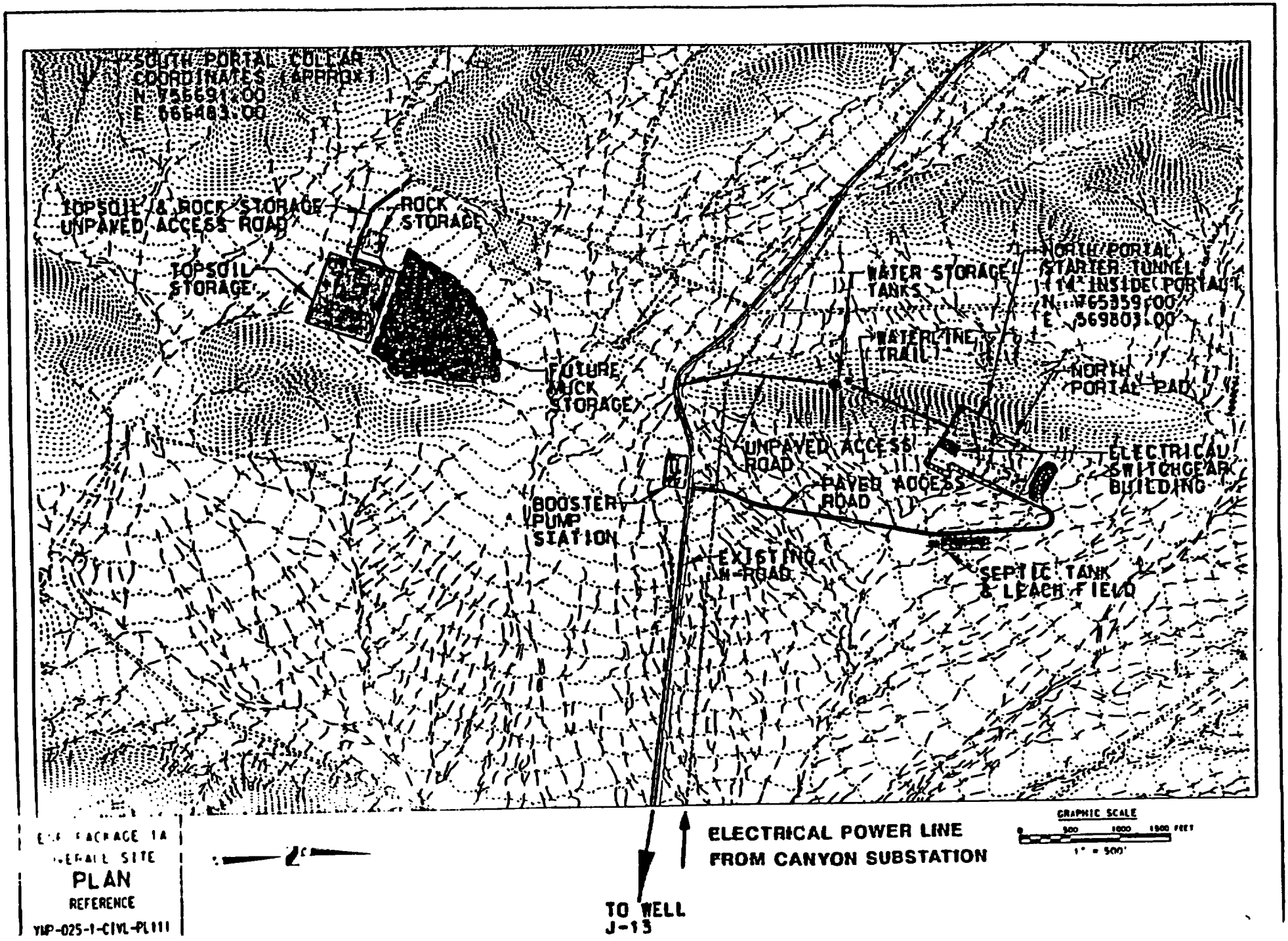
SOUTH PORTAL COLLAR
COORDINATES (APPROX)
N 756691.00
E 666483.00
TOPSOIL & ROCK STORAGE
UNPAVED ACCESS ROAD
ROCK STORAGE
TOPSOIL STORAGE
FUTURE ROCK STORAGE
WATER STORAGE TANKS
WATERLINE TRAIL
NORTH PORTAL STARTER TUNNEL
14' INSIDE PORTAL
N 765359.00
E 569803.00
NORTH PORTAL PAD
UNPAVED ACCESS ROAD
PAVED ACCESS ROAD
ELECTRICAL SWITCHGEAR BUILDING
BOOSTER PUMP STATION
EXISTING H-ROAD
SEPTIC TANK & LEACH FIELD
GRAPHIC SCALE
0 500 1000 1500 FEET
1" = 500'
ELECTRICAL POWER LINE
FROM CANYON SUBSTATION
TO WELL
J-13
PLAN
REFERENCE
YMP-025-1-CIVL-PL111

PRELIMINARY DESIGN

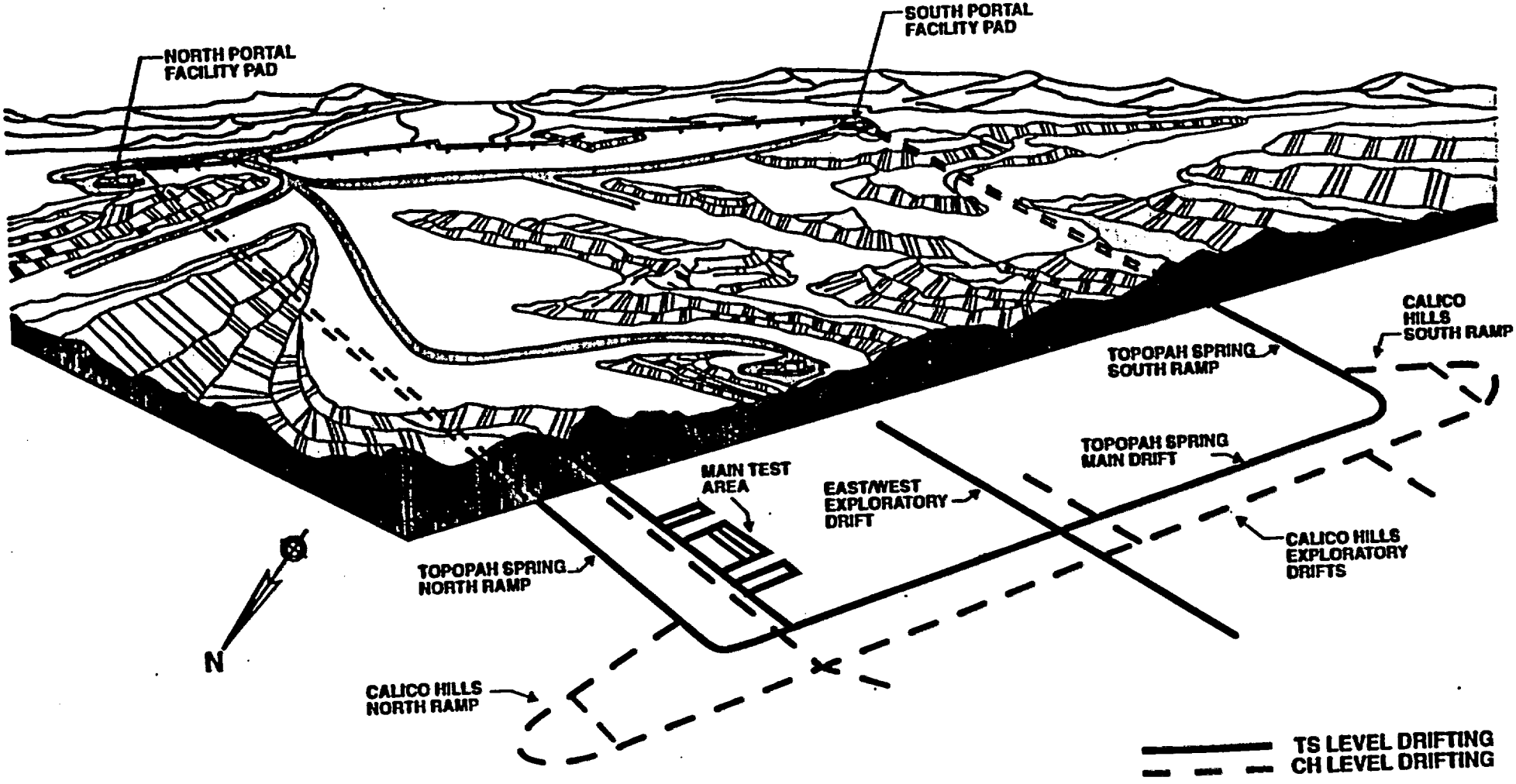

(CH IS APPROX. 170 METERS BELOW TS)

ESFPRELBW.CDR.XSEC/5-18-93

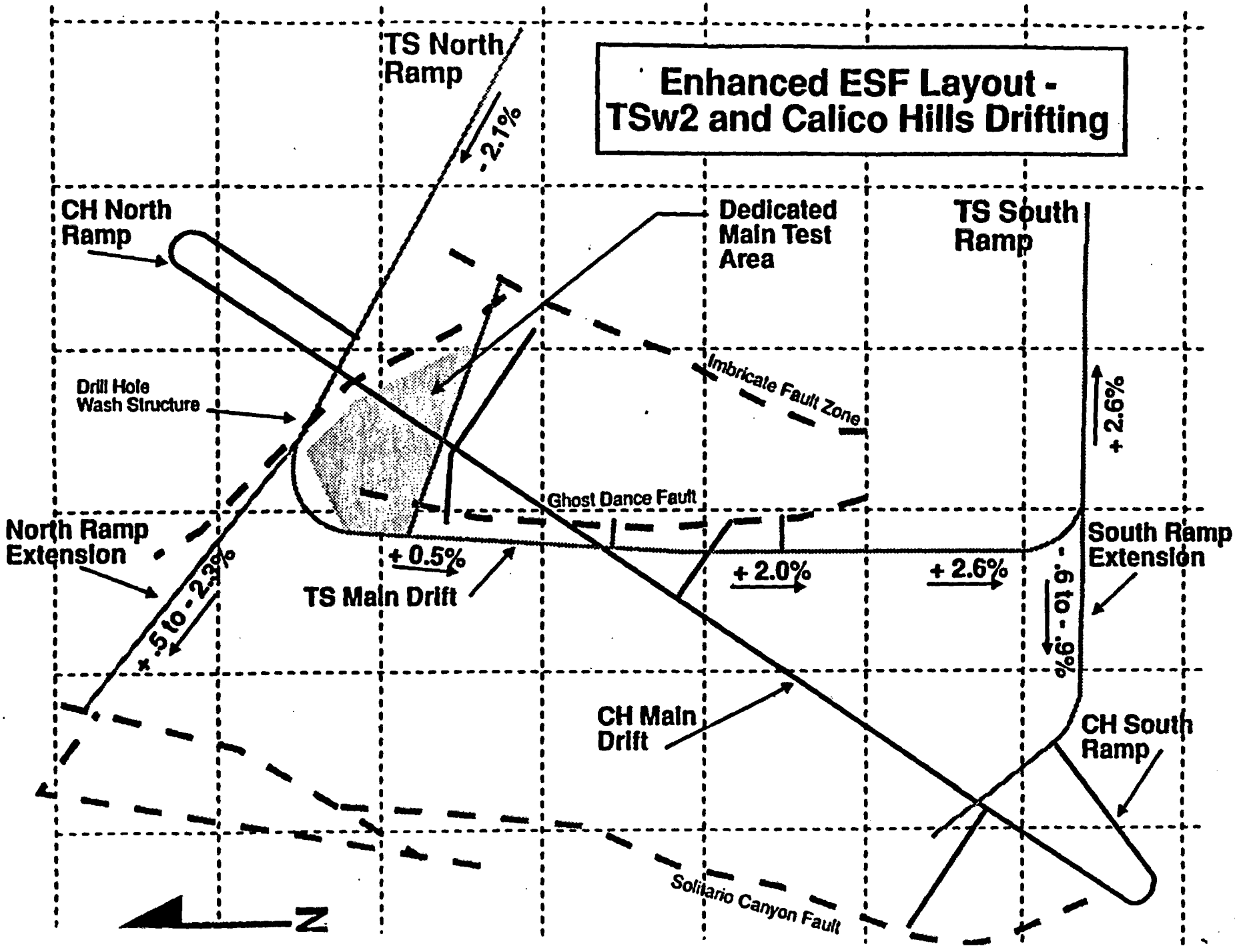
Enhanced ESF Layout -
TSw2 and Calico Hills Drifting
TS North Ramp
-2.1%
CH North Ramp
Dedicated Main Test Area
TS South Ramp
Drill Hole Wash Structure
Imbricate Fault Zone
+ 2.6%
Ghost Dance Fault
North Ramp Extension
+ .5 to - 2.3%
+ 0.5%
TS Main Drift
+ 2.0%
+ 2.6%
South Ramp Extension
-.6 to -.9%
CH Main Drift
CH South Ramp
Solitario Canyon Fault
N

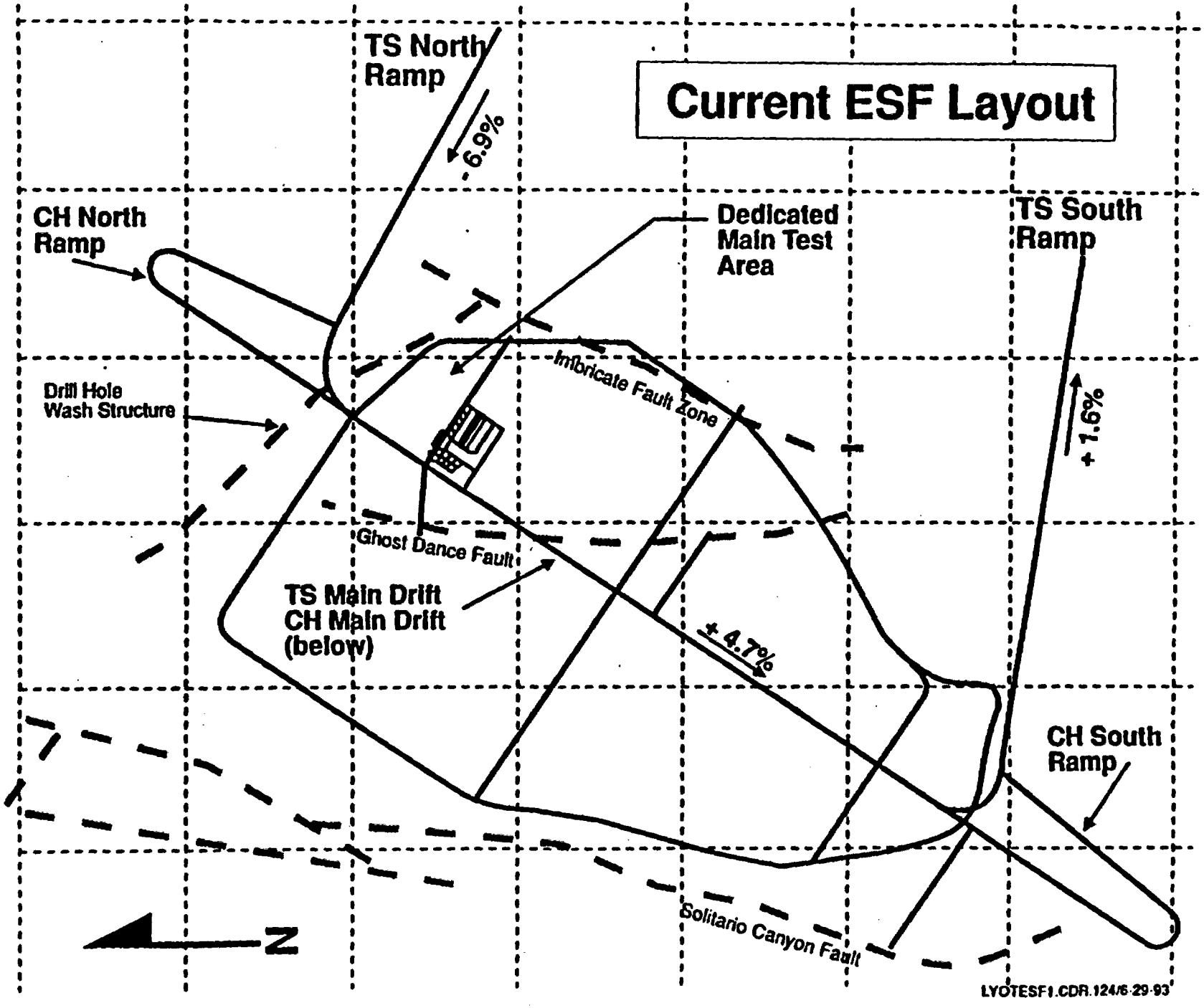
Current ESF Layout
TS North Ramp
-6.9%
CH North Ramp
Dedicated Main Test Area
TS South Ramp
Drill Hole Wash Structure
Imbricate Fault Zone
+1.6%
Ghost Dance Fault
TS Main Drift
CH Main Drift (below)
+4.7%
CH South Ramp
Solitario Canyon Fault
N
LYOTESF1.CDR.124/6-29-93

SCHEDULE FOR PACKAGE 2C
90% REVIEW

- Issue documents to reviewers - March 1, 1994
- Hold Technical Review Meeting - March 15, 1994

SCOPE OF THIS REVIEW

- **ESF Design Package 2B - 90% Review**
  - Muck Storage study
  - Excavation Methods study
  - ESF Ventilation study
  - ESF Ventilation System procurement specifications
  - Surface conveyor system concrete drawings and specifications
  - Rail Haulage System procurement specifications
  - TBM Mapping Platform procurement specifications
  - Communications System specifications

SUITABLE PRODUCT

Implementation of design criteria yields product that:

- Meets mission needs
- Complies with federal and state regulations
- Complies with DOE orders

TYPES OF REVIEWS

Each package undergoes the following reviews:

- 50% Review (conducted by A/E)
  - Management and technical review
- 90% Review (conducted by A/E)
  - Management and technical review)
- Verification (conducted by A/E)
  - Technical review
- DOE Acceptance Review (conducted by YMPO)
  - Management review
- CCB Review (conducted by YMPO CCB)
  - Management review

ESF DESIGN PROCESS

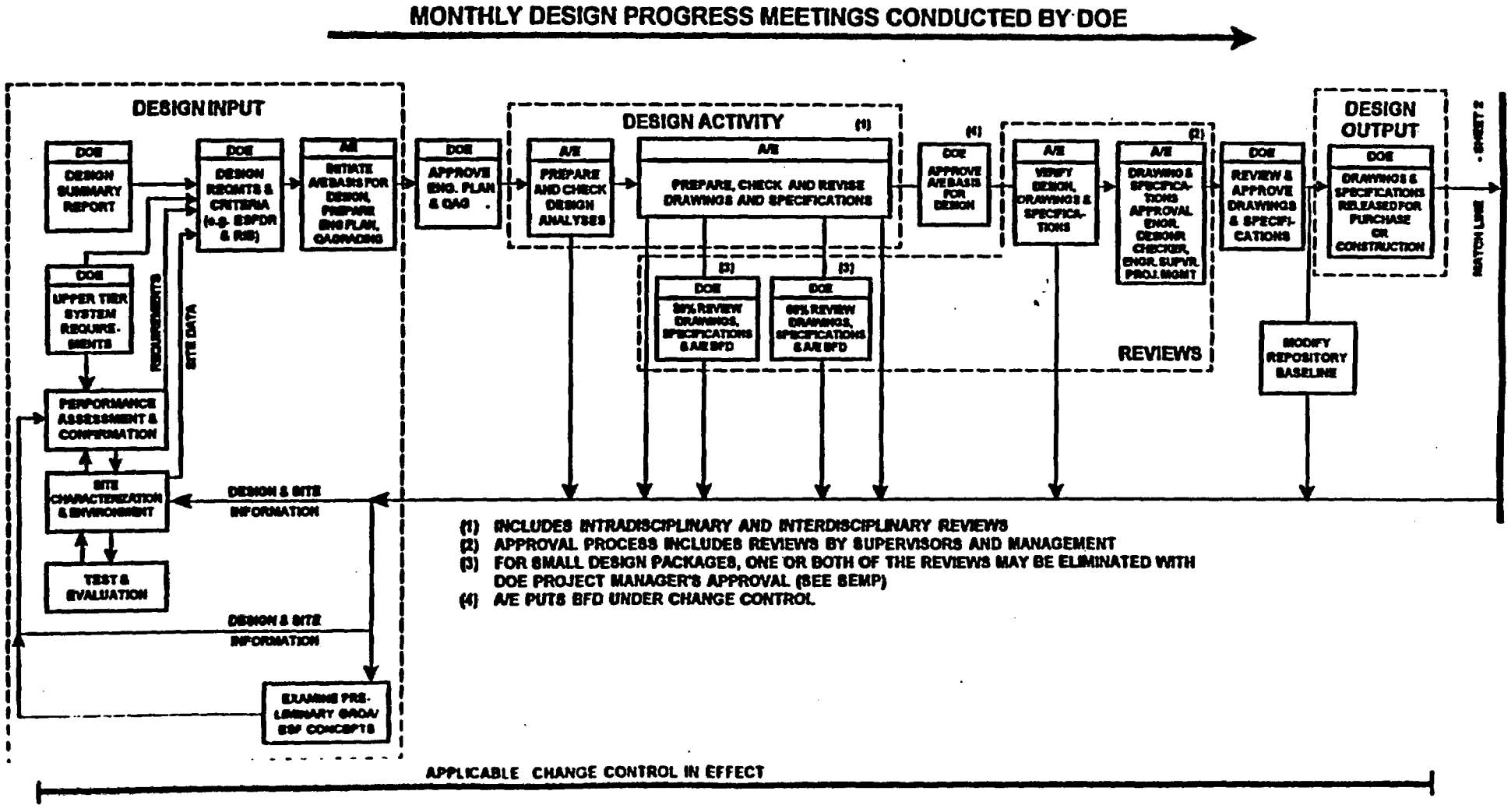

ESFDRP2B17.126.PM4/12-16-93

BACKGROUND

Where we have been,
Where we are,
And where we intend to go

ESF BASIS

- Design basis is approved ESF Design presented in the ESF Technical Baseline, YMP/CM-0016, Rev. 2

INCREMENTED DEVELOPMENT OF ESF/REPOSITORY CONFIGURATION

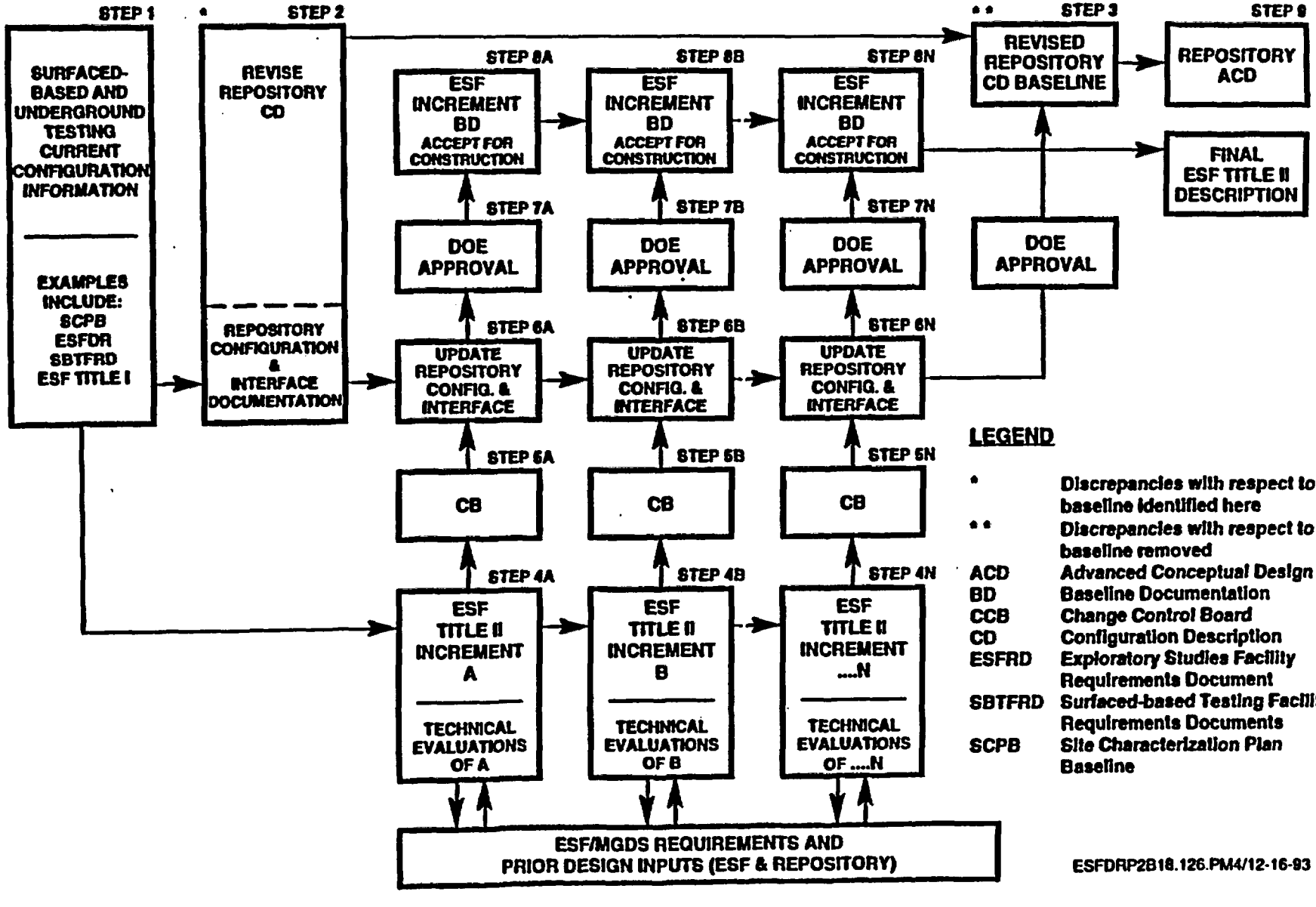

ESFDRP2B18.126.PM4/12-16-93

OBSERVERS INFORMATION

- Become familiar with the plan for implementation of the ESF mission
- Become familiar with design status
- Become familiar with DOE design phases
- Note the potential for future participation and make your needs known
- Request clarification during presentation

ROLE OF REVIEWERS

- Perform technical and management reviews in accordance with criteria provided
- Provide assurance to the project participants that their requirements have been met
- Provide assurance that the design is technically correct and satisfactory
- Part of formal process; receive specialized training; adhere to quality assurance procedures
- Assure comments satisfactorily resolved

INFORMATION FOR OVERSIGHT ORGANIZATION OBSERVERS

- Representatives from NRC, NWTRB, State of Nevada, Nevada counties, others
- Point of contact for questions regarding the review, reviewers and designers is Mr. Norman Simms, CRWMS M&O
- Positive and negative concerns may be addressed , January 6 and 7, at 4 p.m., with Dennis Williams and Jim Replogle, DOE/YMP, in the ESF Briefing Room
- Comment resolution meeting will be held on January 24, 1994

INFORMATION FOR FEDERAL CONSULTING ORGANIZATION OBSERVERS

- Representatives from DOE/NTSO, DOE/HQ and DOE/YMP
- Point of contact for comments and clarifications is Mr. Jaime Gonzalez, DOE/YMP
- Comment resolution meeting will be held on January 24, 1994

REVIEW AGENDA

AND SCOPE

PRESENTED BY

DON SCHUTT

POINTS TO CONSIDER

- This review material is only part of Package 2. Comments should be limited to the scope of this review material and direct interfaces with other parts of the design
- Comments should be objective, clear, concise and to the point as they will become part of the public record
- Utilize your designated point of contact to discuss questions/concerns
- DOE management committed to addressing your concerns
- *Welcome!*

SCOPE OF REVIEW

- Design Output Documents
  - Design drawings
  - Design specifications
  - Design analyses/calculations/studies
  - Basis for Design (BFD)
  - Determination of Importance Evaluation (DIE)
    - » Waste Isolation
    - » Radiological Safety

PURPOSE OF REVIEW

- Provide assurance that the design:
  - Is technically correct
  - Complies with upper-tier requirements
- Updated approach since last review
  - Packages sent out 12/13/93
  - Reviewers familiarize themselves with details
  - Submit comments throughout the meeting

Name	Organization	Area of Expertise
Ashlock, K.J.	M&O	Requirements
Barreres, D.M.	M&O	Fire Protection
Baumeister, R.B.	DOE	Safety
Blaylock, J.	DOE	Quality Assurance
Brandstetter, A.	M&O	Performance Assessment
Bui, T.T.	M&O	Mechanical Design
Bullock, R.L.	RSN	Geotechnical Underground Transportation Underground Mining
Dresel, R.R.	M&O	Construction Management
Edwards, D.L.	USGS	Geology
Gomez, M.J.	M&O	Structural Analysis
Gonzalez, J.A.	DOE	General Compliance
Hansmire, W.H.	Kiewit/PB	Construction
Jacobs, W.R.	SAIC	Environmental
Koss, D.L.	REECo	Construction
Kovach, R.G.	LANL	Test Engineering
Law, W.	M&O	Systems Engineering
Robertson, J.L.	M&O	Specialty Engineering
Rogers, D.J.	M&O	Repository
Senderling, M.	DOE	Systems Engineering
Shane, Y.D.	M&O	Electrical Design Instruments and Controls Power Distribution
Simms, N.T.	M&O	Regulatory
Smith, R.E.	M&O	Test Interference
Verna, B.J.	DOE	DIE General Compliance
White, R.J.	DOE	Ventilation
White, J.M.	DOE	Repository Interface

REVIEW TEAM

- Independent technical reviewers
  - Review design in area of technical expertise in accordance with specific design review criteria
  - Submit comments to Rick Fournier
- Management reviewers
  - Review design in technical and/or management areas in accordance with management, general technical, or specific design criteria
  - Submit comments to Rick Fournier
- Observers
  - Observe review process, request clarification, coordinate requests with point-of-contact, coordinate comments with sponsoring reviewers
  - Submit comments to Mr. Jaime Gonzalez (federal consulting organizations) or Mr. Norman Simms (oversight organizations) or a review team member

REVIEW PROCESS

PRESENTED BY

RICK FOURNIER

2B 90% DESIGN REVIEW MEETING AGENDA
Wednesday, January 5, 1994
Holiday Inn, Emerald Room

TIME	TOPIC	PRESENTER
8:30a	WELCOME	R.G. VAWTER
8:35	INTRODUCTION	W.D. SCHUTT
8:40	OPENING REMARKS	J.M. REPLOGLE
9:00	REVIEW AGENDA AND SCOPE	W.D. SCHUTT
9:15	REVIEW PROCESS	R.J. FOURNIER
9:30	BREAK	
9:40	ESF BASELINE AND REQUIREMENTS FLOWDOWN	M.S. RINDSKOPF
10:15	BASIS FOR DESIGN DOCUMENT	J.W. PETERS
10:30	DETERMINATION OF IMPORTANCE EVALUATIONS	P. S. HASTINGS
10:45	ENVIRONMENTAL ISSUES	E. W. MCCANN
11:00	TEST FUNCTIONS	R.D. OLIVER
11:15	ESF LAYOUT - CURRENT AND PROPOSED	D.G. MCKENZIE
11:30	LUNCH	
1:00p	SUBSURFACE TECHNICAL PRESENTATIONS	P.W. MCKIE
1:15	OVERVIEW - DESIGN PACKAGE 2B	J.L. NAAF
1:30	SUBSURFACE PRESENTATION	R.S. SAUNDERS
4:30	SUBMIT COMMENTS FOR SUBSURFACE	
5:00	ADJOURN	

Thursday, January 6, 1994
Room 450, Bank of America Building

8:00a	MECHANICAL PRESENTATION	D.F. VANICA
11:00	SUBMIT COMMENTS FOR MECHANICAL	
11:30	LUNCH	
1:00p	ELECTRICAL/INSTRUMENTS & CONTROLS (I&C)	W. REED
4:00	SUBMIT COMMENTS FOR ELECTRICAL/(I&C)	
4:30	ADJOURN	

Friday, January 7, 1994
Room 450, Bank of America Building

9:00a	STRUCTURAL PRESENTATION	K.J. HEROLD
10:00	SUBMIT COMMENTS FOR STRUCTURAL	
10:30	DIE DISCUSSION AND COMMENTS	P.S. HASTINGS
11:30	LUNCH	
1:00p	BFD/GENERAL TOPICS DISCUSSION	J.W. PETERS
3:00	SUBMIT ALL REMAINING COMMENTS	
5:00	ADJOURN	

NEW REVIEW PROCESS
continued

- New process remains a six week effort
- Improvements include:
  - Reviewers receive packages two weeks prior to meeting
  - Design review meeting is an in-depth, technical presentation
  - Comments are now properly divided into *Mandatory* and *Minor Change* categories
  - Reviewers are mailed responses for review
  - Only rejected responses at the comment resolution meeting

NEW REVIEW PROCESS

- Design package is mailed out to reviewers and interested observers to review the package for two weeks
- A design review meeting is held where the package is presented by the design organization
  - During this meeting, comments are verbally made for discussion
  - Comments which cannot be resolved by discussion are submitted
- The design organization prepares responses to mandatory comments and forwards them to reviewers for disposition
- Reviewers accept or reject comment responses
- A comment resolution meeting is held to close comments whose responses were rejected

90% Design Review - Package 2B

CRWMS/M&O

Document Review Record
(Continued)

ATTACHMENT IV

WBS: 1.2.6
QA: QA
Page: Of:

DOCUMENT TITLE	REVISION	DATE	DOCUMENT IDENTIFIER

COMMENT NO.	SECTION/ PARAGRAPH	COMMENTS	RESPONSE	ACCEPT/ REJECT
		REQUIREMENT: _____		

REVIEWED BY

Printed Name & Signature _____ Date

RESPONSE BY:

Printed Name & Signature _____ Date _____

QAP-3-1

0033 (11/01/93)

COMMENTS

- **Two categories:**
  - **Mandatory comment identifies:**
    - » **Conflict/deviation from M&O or OCRWM policy or QA requirement**
    - » **Substantial change to existing processes/practices**
    - » **Issue that does not meet stated review criteria**
  - **Minor Changes**
    - » **Important comments that do not meet requirements for mandatory**
    - » **Clarify the document or provide constructive suggestions for improvement**
    - » **Editorial, typos, mistakes, etc.**

COMMENT HANDLING

- **Mandatory comments:**
  - Submitted on the Document Review Record (DRR)
  - Design organization prepares response and sends to reviewer
  - Reviewer accepts or rejects the response, sends back
  - Rejected responses are reworked and discussed at the comment resolution meeting
- **Minor Change comments:**
  - Submitted on the Minor Change/Editorial form provided or as redlines to the documents
  - Design organization prepares a response, if applicable
  - Responses are handed out at the comment resolution meeting
  - Acceptance or rejection of the response is not required

Minor Changes/Editorial Comments
Design Package 2B

Page: Of:

DOCUMENT TITLE	REVISION	DATE	DOCUMENT IDENTIFIER

COMMENT NO.	SECTION/ PARAGRAPH	COMMENTS	RESPONSE

REVIEWED BY:	RESPONSE BY:
Printed Name & Signature / Date	Printed Name & Signature / Date

2B 90% DESIGN REVIEW MEETING AGENDA
Wednesday, January 5, 1994
Holiday Inn, Emerald Room

TIME	TOPIC	PRESENTER
8:30a	WELCOME	R.G. VAWTER
8:35	INTRODUCTION	W.D. SCHUTT
8:40	OPENING REMARKS	J.M. REPLOGLE
9:00	REVIEW AGENDA AND SCOPE	W.D. SCHUTT
9:15	REVIEW PROCESS	R.J. FOURNIER
9:30	BREAK	
9:40	ESF BASELINE AND REQUIREMENTS FLOWDOWN	M.S. RINDSKOPF
10:15	BASIS FOR DESIGN DOCUMENT	J.W. PETERS
10:30	DETERMINATION OF IMPORTANCE EVALUATIONS	P. S. HASTINGS
10:45	ENVIRONMENTAL ISSUES	E. W. MCCANN
11:00	TEST FUNCTIONS	R.D. OLIVER
11:15	ESF LAYOUT - CURRENT AND PROPOSED	D.G. MCKENZIE
11:30	LUNCH	
1:00p	SUBSURFACE TECHNICAL PRESENTATIONS	P.W. MCKIE
1:15	OVERVIEW - DESIGN PACKAGE 2B	J.L. NAAF
1:30	SUBSURFACE PRESENTATION	R.S. SAUNDERS
4:30	SUBMIT COMMENTS FOR SUBSURFACE	
5:00	ADJOURN	

Thursday, January 6, 1994
Room 450, Bank of America Building

8:00a	MECHANICAL PRESENTATION	D.F. VANICA
11:00	SUBMIT COMMENTS FOR MECHANICAL	
11:30	LUNCH	
1:00p	ELECTRICAL/INSTRUMENTS & CONTROLS (I&C)	W. REED
4:00	SUBMIT COMMENTS FOR ELECTRICAL/(I&C)	
4:30	ADJOURN	

Friday, January 7, 1994
Room 450, Bank of America Building

9:00a	STRUCTURAL PRESENTATION	K.J. HEROLD
10:00	SUBMIT COMMENTS FOR STRUCTURAL	
10:30	DIE DISCUSSION AND COMMENTS	P.S. HASTINGS
11:30	LUNCH	
1:00p	BFD/GENERAL TOPICS DISCUSSION	J.W. PETERS
3:00	SUBMIT ALL REMAINING COMMENTS	
5:00	ADJOURN	

DESIGN REVIEW MEETING

- All reviewers attend the in-depth, technical presentation of the design package, January 5, 6 & 7, 1994
- During the presentation, reviewers should make their comments verbally
- If the discussion cannot resolve the comment, the reviewer will write the comment either as Mandatory or Minor Change
- Comments can be submitted at the end of each discipline's presentation
- All comments should be submitted by the end of the three day meeting, Friday, January 7, 1994
- On an exception basis, if a reviewer needs to return to their home office to check an issue which arises during the presentation, any resulting comments are due by close-of-business, Monday, January 10, 1994
- Mandatory comments submitted late do not require a response

Overview

- Document Hierarchy
- ESF Baseline
- Requirements Traceability

ESF Baseline and Requirements Flowdown

January 5, 1994

Gary M. Teraoka

Requirements/Design

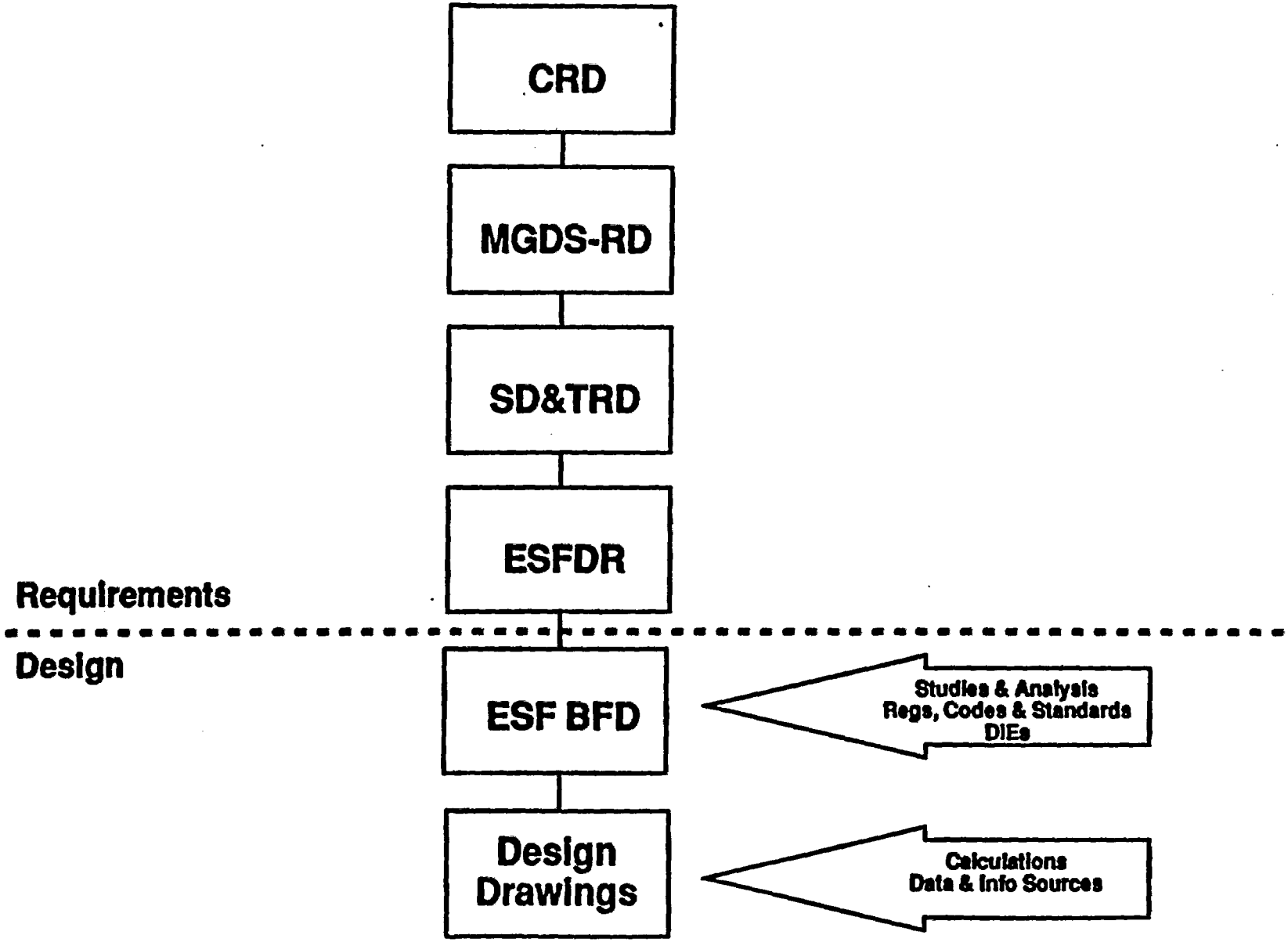

CHANGES TO THE DOCUMENT LIST
ATTACHMENT 1 IN THE REVIEW PLAN

- DIE BABFAD000-01717-2200-00093 was incorrectly added to the document list for 2B. Please delete it from your list.
- Three documents have previously been reviewed and were provided for reference only.
  - Submittals - 01300
  - Contractor Quality Control/Quality Assurance - 01400
  - Material and Equipment - 01600

⇨ Please move the three documents from Attachment 1 to Attachment 2, Reference Documents Provided. Comments may not be submitted against reference material.

- Two typographical errors:
  - Muck Storage Study - BABCC0000-AA-12-00008 Rev. 00 should be Rev. 0A
  - Precast Concrete - 03480 Rev. 0A should be 0B
  - The correct revisions were shipped in the package

90% DESIGN REVIEW
DESIGN PACKAGE 2B
NORTH RAMP STUDIES, ANALYSES AND SPECIFICATIONS

SCHEDULE OF EVENTS

Date	Time	Location	Purpose
December 13, 1993	N/A	N/A	Mail Review Packages
December 14-23, 1993	N/A	N/A	Reviewers examine package
January 5, 1994 Wednesday	8:30a - 4:30p	Holiday Inn 325 E. Flamingo Rd Las Vegas Nevada	Design Review Meeting, overview
January 6, 1994 Thursday	8:00a - 5:00p	Room 450	Package Presentation
January 7, 1994 Friday	9:00a - 5:00p	Room 450	Package Presentation Comments may be turned in
January 10, 1994	5:00p	N/A	Final Comments due
January 7-14, 1994	N/A	N/A	Comment response preparation
January 14, 1994	N/A	N/A	Responses mailed to reviewers
January 17-21, 1994	N/A	N/A	Reviewers review responses
January 24, 1994	8:00a - 5:00p	Room 450	Comment Resolution Meeting, if required

Document Hierarchy

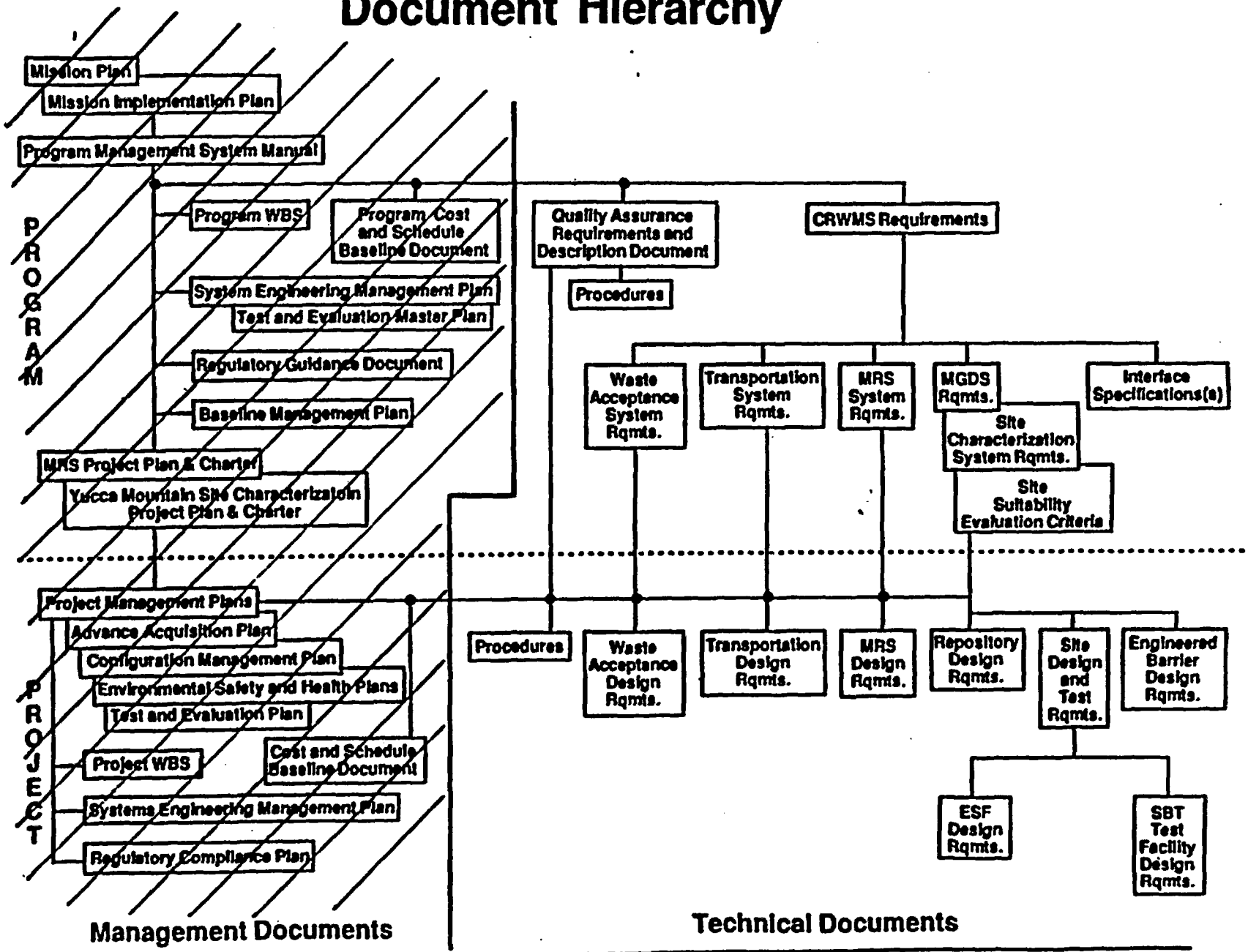

Technical Baseline & Design Phases

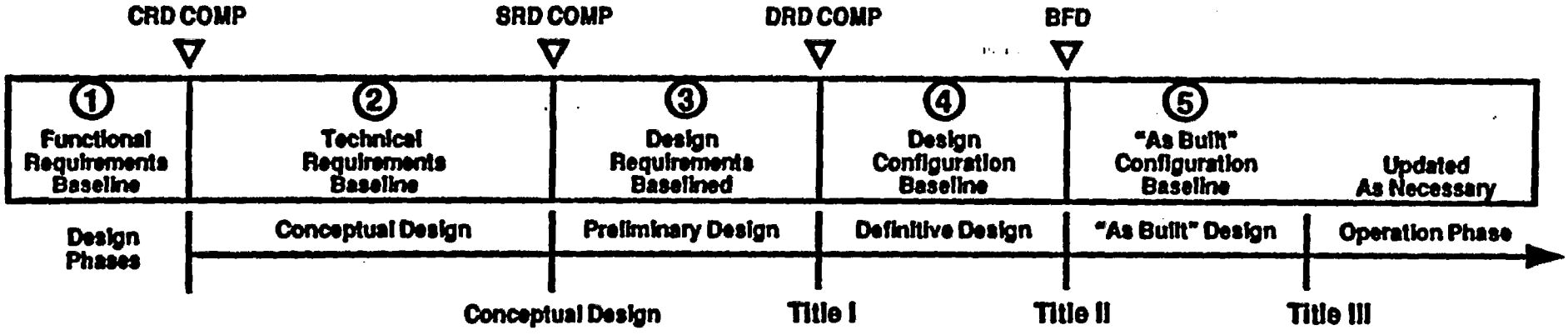

Composition of a Technical Baseline

- Initially developed based on Mission needs (NWPAA, 10CFR60 ...)
- Becomes more detailed as the Project progresses (iterative process)
- Establishes attainable performance and other technical requirements prior to design development, construction, or fabrication
- Prepared IAW specified standards
- Composed of 5 stages

Requirements Traceability (Cont'd.)

SD&TRD

↓

ESFDR

↓ Allocates 10 CFR 60.15(c)(1) to all ESF Subsystems to be addressed in the ESF Basis of Design (ESFDR 3.2.1.M)

ESF Basis for Design

Provides detailed design criteria for 10 CFR 60.15(c)(1) to support the design, specifications, calculations, and drawings

Requirements Traceability

Example

10 CFR 60.15(c)(1)

↓ Conduct Site Characterization investigation in such a manner as to limit adverse effects on long-term performance of geologic repository to the extent practical

CRD

↓ Allocates 10 CFR 60 to the MGDS-RD and 10CFR 60.15(c)(1) in CRD 3.7.4.2.K.5

MGDS-RD

↓ Allocates 10 CFR 60.15(c)(1) to SD&TRD in Section 3.7.1.3.B.1 (Table 3-6) as one of the mandatory 10 CFR 60 requirements for Site Characterization Facilities

SD&TRD

Allocates 10 CFR 60.15(c)(1) to ESFDR in Section 3.7.1.B (Table 3-8) and in Section 3.7.2.2.A

Detailed Traceability Example (Continued)
ESFDR to BFD

BFD
7.6.3.3 Material and Personnel Handling (BABFC000)

A. General

-
-
-

B. Rail System

-
-
-

C. Tunnel Invert Segments

1. ...
2. An SOF backer rod caulking system shall be used to prevent spilled hydrocarbons (oil and grease) from reaching the tunnel invert. The packing seals the space between invert segments. [ESFDR 3.2.1 M5] [ESFDR 3.2.1.1 A] [ESFDR 3.2.1.4 B1a]

-
-
-

D. Locomotives

-
-
-

5. The operation of the locomotives and rails cars (rolling stock) in the ESF tunnel introduces a potential for the release of contaminants that may either adversely impact site characterization data or the capability of the site to isolate waste. The Manufacturer shall describe a program addressing design features, and maintenance, operation and administrative programs for precluding and mitigating such leaks and spills. [ESFDR 3.2.1 M5] [ESFDR 3.2.1.1 A] [ESFDR 3.2.1.4 B1a]

-
-
-

9. Wheels shall have sealed wheel bearing to prevent hydrocarbon leakage. [ESFDR 3.2.1 M5] [ESFDR 3.2.1.1 A] [ESFDR 3.2.1.4 B1a]

Detailed Traceability Example
ESFDR to BFD

ESFDR 3.2.1

M. Investigations to obtain the required information shall be conducted in such a manner as to limit adverse effects, to the extent practical, on the long-term performance of the geologic repository.

[SD&TRD 3.7.2.2.A, 3.7.B.1, 3.7.E][10 CFR 60.15(c)(1)]

1. Underground ESF construction shall not adversely affect in situ site characterization.

[SD&TRD 3.7.2.2.A, 3.7.B.1][10 CFR 60.15(c)(1)]

2. All ESF activities shall be monitored frequently for the purpose of assessing the effects of those activities on the future suitability of the site for a potential repository.

[SD&TRD 3.7.2.2.A, 3.7.B.1][10 CFR 60.15(c)(1)]

3. All substances and tracers intended to be added to water and compressed air to be used underground for such purposes as drilling and dust control, shall first be reviewed for potential to affect site characterization testing, performance confirmation testing or monitoring, and waste isolation. Tracers may be used only following review, approval and receipt of the appropriate permits. [TBD]

[SD&TRD 3.7.2.2.A, 3.7.B.1][10 CFR 60.15(c)(1)]

4. The use of hydrocarbons and solvents underground shall comply with criteria TBD by performance assessment. [TBD]

[SD&TRD 3.7.2.2.A, 3.7.B.1][10 CFR 60.15(c)(1)]

5. Precautions shall be taken to avoid and/or control spills of hydrocarbons, solvents, and cementitious materials. Spills which do occur shall be cleaned up to the extent practicable. Spilled and contaminated material (including soil) shall be disposed of in accordance with federal and state requirements. Specifically, this means the following regarding cleanup:

[SD&TRD 3.7.2.2.A, 3.7.B.1][10 CFR 60.15(c)(1)]

(a) Liquid spills -- all puddles and soils that are nearly saturated with the spilled material shall be removed.

[SD&TRD 3.7.2.2.A, 3.7.B.1][10 CFR 60.15(c)(1)]

(b) Powder spills -- all spilled material shall be removed. Final cleanup from solid surfaces shall be by sweeping; final cleanup from soil surfaces shall include removal of soil in contact with the spilled material.

[SD&TRD 3.7.2.2.A, 3.7.B.1][10 CFR 60.15(c)(1)]

6. ESF items and activities shall not affect overall system performance objectives for the MGDS as required by 10 CFR 60.112.

[SD&TRD 3.7.2.2.I, 3.7.B.1][10 CFR 60.112]

Package 2B
90% Design Review

BASIS FOR DESIGN DOCUMENT
(BFD)

John W. Peters
January 5, 1994

Detailed Traceability Example (Continued)
ESFDR to BFD

E. Rail Cars

-
-
-

3. The operation of the locomotives and rails cars (rolling stock) in the ESF tunnel introduces a potential for the release of contaminants that my either adversely impact site characterization data or the capability of the site to isolate waste. The Manufacturer shall describe a program addressing design features, and maintenance, operation and administrative programs for precluding and mitigating such leaks and spills. [ESFDR 3.2.1 M5] [ESFDR 3.2.4.1 A] [ESFDR 3.2.1.4 B1A]

Current Status Of The BFD

- Revision 02 of the BFD is included in the 90% Design Review for Package 2B.
  - The BFD is prepared accordance with M&O procedure NLP-3-20 DEVELOPMENT OF BASIS FOR DESIGN DOCUMENTS.
  - Upon completion of this review and comment resolution the BFD Revision 02 will be:
    - Baselined at Level 3 using M&O procedure QAP 3-4, BASELINE CONTROL.
    - Submitted to the DOE for acceptance.
    - Available for verification of the specifications and drawings.

Basis For Design Document

- The highest level document in the design document hierarchy.
- Defines the criteria for detailed design.
- The BFD constitutes the prime source of documentation of design traceability from the ESFDR to the design outputs.
- Ultimately becomes a log or record of all the input criteria used in the design.
- Is a living document which is revised as the ESF design develops.

Organization of the BFD (cont)

7. DESIGN REQUIREMENTS AND METHODS

- Organized by Configuration Item (CI)
  - CI - System, Structure, or Component controlled by Configuration Management

I. DEFINITION OF SYSTEM ELEMENTS - A brief description of the CI

II. BOUNDARIES AND INTERFACES - States the limits of the CI and its interfaces with other CIs.

III. APPLICABLE REGULATIONS, CODES, ACCEPTANCE STANDARDS, AND DOE ORDERS - Those applicable to the CI.

Organization of the BFD

1. INTRODUCTION - A brief description of the BFD and its purpose.

2. SCOPE - A brief statement of the scope of the BFD

3. DEFINITIONS AND SYMBOLS - A explanation of the terms, acronyms, and symbols used

4. RESPONSIBILITIES - States the responsibilities of managers, QA, and engineers with regard to the BDF.

5. GOVERNING DESIGN CRITERIA DOCUMENTS AND REFERENCES - A general list of documents and references and the order of precedence to applied in case of conflicts.

6. QUALITY ASSURANCE REQUIREMENTS - The QA program and requirements applicable to the BFD.

Organization of the BFD (cont)

IV. DESIGN CRITERIA

- Itemized design input statements which quantify and define the functional and performance requirements set forth in the applicable Design Requirements Document

- Sources of design criteria include, but are not limited to:

  - Regulations, Codes, and Acceptance Standards
  - DOE Orders
  - Results of analysis and trade-off studies
  - Controls dictated by DIEs and Safety and RAM Analyses
  - Analyses
  - Handbooks, manuals, and texts
  - Other inter-organization communications
  - Knowledge and experience of the design engineers

REFERENCES - Library or record center listing of the outside references mentions other than those in Section III

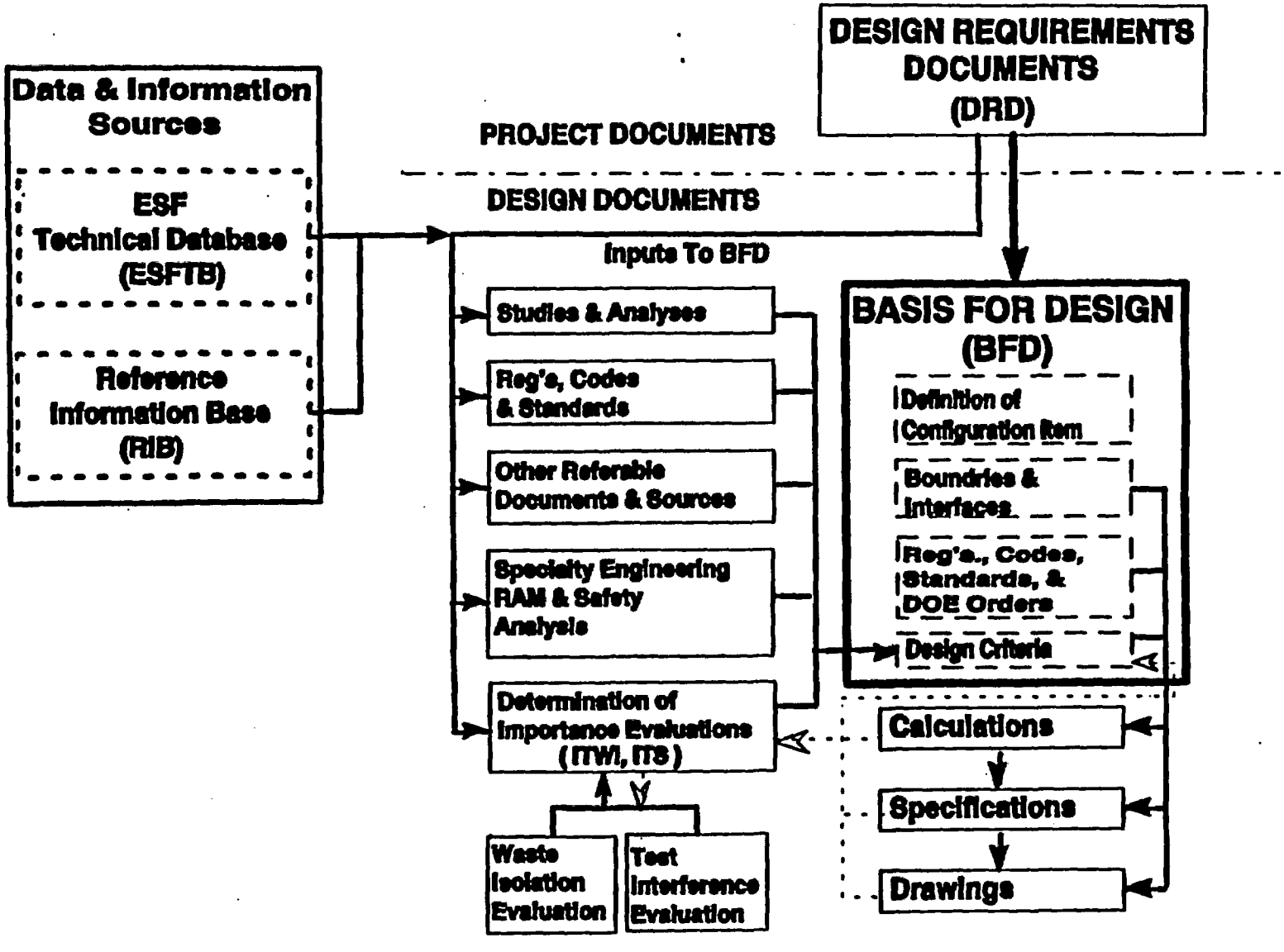
DESIGN REQUIREMENTS DOCUMENTS (DRD)
Data & Information Sources
ESF Technical Database (ESFTB)
Reference Information Base (RIB)
PROJECT DOCUMENTS
DESIGN DOCUMENTS
Inputs To BFD
Studies & Analyses
Reg's, Codes & Standards
Other Referable Documents & Sources
Specialty Engineering RAM & Safety Analysis
Determination of Importance Evaluations (ITWI, ITS)
Waste Isolation Evaluation
Test Interference Evaluation
BASIS FOR DESIGN (BFD)
Definition of Configuration Item
Boundries & Interfaces
Reg's., Codes, Standards, & DOE Orders
Design Criteria
Calculations
Specifications
Drawings

Traceability

The BFD constitutes the prime source of documentation of design traceability from the DRD to the design outputs, ie. Calculations, Specifications, and Drawings.

- From the ESFDR ⇒ BFD Design Criteria (BFDDC) ⇒ CI

  Shown In VOLUME 2 APPENDIX A

- From CI ⇒ Design Outputs
  (Calculations, Specifications, & Drawings)

  Shown In VOLUME 2 APPENDIX B

Control of Unqualified Input Information

- CONTROL - Design criteria containing unqualified information or data are flagged with the appropriate TBD, TBV, or TBS.
  - To Be Determined (TBD) - Information to be determined (or quantified) at a future time.
  - To Be Verified (TBV) - Information to be verified (or qualified) at a future time.
  - To Be Specified (TBS) - Design criteria which respond to requirements emanating from higher tier requirements documents which contain (TBD)s or (TBV)s are designated (TBS).
- This transfers open item information to the design engineers, who then carry it to the design outputs.

Traceability Example

ESFDR	***Appendix A***	
ESFDR Requirement	3.2.1.10.1.D	Load Combinations
BFD		
BFD Design Criteria	7.6.3.2.B.1.d	Concrete 5000psi, 28 days
CII/CI Title	BABFCB000	Subsurface Conveyor
Calculation	BABFCB000-01717-0200-00148	Bend Tower - Mat Design
Drawing	BABFCB000-01717-2100-41098 ***Appendix B***	Bend Tower & Bent # 1 Foundation

Scope Of The Review

The scope of Revision 02 and thus the scope of this review is as follows:

- **Section 1 Through 6 - Minor revisions to fit the new procedure.**
- **The TBV/TBD/TBS logs and the matrices in Appendices A and B**

BFD Section	CI Title	CII	Comments
7.2.5.2	Facility Monitoring and Control System	BABBEB000	Procurement Only Subsurface Equipment
7.4.3.1	Mapping Gantry	BABDCA000	Procurement Only
7.6.1.2	Subsurface Communications	BABFAB000	Procurement Only
7.6.1.4	Subsurface Ventilation	BABFAD000	Procurement Only
7.6.1.8	Subsurface Fire Protection	BABFAH000	Procurement Only Sections A&D Only
7.6.1.10	Subsurface Monitoring and Warning System	BABFAJ000	Procurement Only
7.6.3.2	Subsurface Muck Conveyor System	BABFCB000 *(Withdrawn)*	Concrete Foundation Design, Section IV.B, Added. Revised Selected Criteria in Section IV.A.
7.6.3.3	Material and Personnel Handling	BABFCC000	Procurement of Section IV.A, IV.B, IV.C, IV.D, IV.E, and IV.G Only

Additional Review Information In Appendix A

Appendix A Traceability Matrix ESFDR To BFD and Configuration Items Identifiers (CII)				
CI Title	CII	ESFDR	BFDDC	Comments
Linings and Ground Support	BABEAB000	3.2.2.4.I.1	7.5.1.2.IV.18	Out of Current Scope
Subsurface Conveyor	BABFCB000	3.2.1.J.9	7.6.3.2.IV.A.32	Approved
Subsurface Conveyor	BABFCB000	3.2.1.M.3	7.6.3.2.IV.B.9	In Review

Out of Current Scope - ESFDR references and design criteria which beyond the current scope and not approved or applied design outputs.

Approved - Design criteria have been approved and applied design outputs.

In Review - Design criteria which will be applied to the current design outputs, but have not been approved. After the review and comment resolution these will be changed to Approved.

DETERMINATION OF IMPORTANCE EVALUATION

PRESENTED BY

Peter Hastings

PACKAGE 2B
90% DESIGN REVIEW

PRESENTED BY

ED McCANN

T&MSS/SAIC

JANUARY 5, 1994

ENVIRONMENTAL INTERFACES

Presentation Objectives

- Explain how environmental requirements are incorporated into design
- Explain the environmental review process for Package 2B facilities
- Summarize the status of permits necessary for Package 2B facilities

ENVIRONMENTAL PROGRAM

- Prerequisite to site characterization activities
- Driven by regulatory requirements, site characterization program, and sound scientific practices
- Environmental/engineering interfaces identified:
  - Environmental Management Plan
  - Environmental Regulatory Compliance Plan
  - ESF Design Requirements Document
  - Surface-Based Testing Facilities Requirements Document
  - Participate in design reviews
  - Environmental compliance/land access approval (AP8.1)

ENVIRONMENTAL INTERFACES

Environmental design, construction and operation requirement categories:

- Air pollution control
- Water appropriation
- Drinking water protection
- Water pollution control
- Solid and hazardous waste management
- Biological/cultural resources protection
- Reclamation/soils
- Radiological health and safety
- Land access
- Flood plain protection

AP8.1 ENVIRONMENTAL COMPLIANCE AND LAND ACCESS APPROVAL

The Design Package activities are reviewed using the following criteria:

- **Compliance with environmental regulatory requirements**
- **Compliance with land access requirements**
- **EMMP commitments and monitoring programs**
- **Preactivity surveys for soils (reclamation potential), archaeological, radiological and biological resources**

PACKAGE 2B ENVIRONMENTAL PERMITS

• Air quality permit for land disturbance	June 91
• Nevada determined portal AQ permit not needed	October 92
• Water appropriation permit	March 92
• UIC permit for use of tracers	May 92
• RCRA EPA ID number	June 89
• Corps of Engineers general permit	July 90
• Storm water discharge permit	May 93
• Drinking water system	September 93
• Sewage treatment system	on hold
• Concrete batch plant AQ permit	January 94 (E)
• Conveyor system AQ permit	October 93
• Preactivity surveys	Up-to-date

PKG1BENIEM.1.2.13/8-2-93

CONCLUSION

- All environmental design requirements have been identified
- Environmental protection has been incorporated into the design

2B 90% DESIGN REVIEW

TEST FUNCTIONS

Presented by

Ned Z. Elkins
Deputy Technical Project Officer
Los Alamos National Laboratory
794-7097

January 5, 1994

PRELIMINARY DEFINITION OF EXPLORATORY STUDIES FACILITY (ESF) TESTING PROGRAM

- Following completion of ESF Alternatives Study (1989-1990), the Yucca Mountain Site Characterization Project Office developed preliminary ESF Test Planning Document, TPP 91-5, "Planned Exploratory Studies Facility Tests"

  - Lead coordination provided by ESF Test Coordination Office (TCO)
  - Input developed and verified by ESF test organizations
    - -- U.S. Geological Survey
    - -- Sandia National Laboratories
    - -- Lawrence Livermore National Laboratory
    - -- Los Alamos National Laboratory

- Initiation of various evaluations to streamline and sequence subsurface test program
- Complete revision of high-level facility design requirements (ESFDR, Appendix B)

CATEGORIZATION AND PRIORITIZATION OF ESF TESTS

- Initial test planning (TPP 91-5) defined 42 ESF test activities ranging from design verification and excavation monitoring, through sampling and small-scale test activities, to large scale in situ testing.

- Major Categories of Tests:
  - Hydrologic
  - Mechanical Properties
  - Geologic
  - Geochemical
  - Thermal (Waste Package Environment) Response

- Consolidation of Tests into Integrated Programs is Ongoing
  - Functional Consolidation
  - Spatial Consolidation

- Prioritization and sequencing
  - Deferrability
  - Construction Sequence

TESTING INTEGRATION WITH ESF DESIGN AND CONSTRUCTION

- Development and Documentation of Test-Related Functional Requirements, Performance Criteria, Constraints and Controls (ESF Design Support)

  - Revision of ESFDR, Appendix B

  - Development of Test-Specific Design Criteria and Test Controls Development In-Line with Phased Facility Design

  - Coordination and Integration of Final Test Planning and Field Implementation with Facility Designers and Construction Management

DR28.NZE 1/5/94

TESTS PLANNED IN ESF RAMPS AND DRIFTS

I. GEOLOGIC/GEOHYDROLOGIC TESTS:

- Underground Geologic Mapping
- Consolidated Sampling
- Intact-Fractures
- Percolation *
- Radial Boreholes*
- Hydrochemistry*
- Hydrologic Properties of Major Faults*
- Diffusion*
- Tomography/VSP
- Perched Water

II. GEOMECHANICAL AND ENGINEERING TESTS:

- Consolidated Sampling
- Excavation Effects*
- Demonstration Breakout Room (TSw1 Heater Test)*
- Plate Loading*
- Excavation Investigations (Convergence, Monitoring, Stability, Ventilation)
- Overcore Stress*
- In Situ Testing of Seal Components*

* TESTS REQUIRING ALCOVES

DR28.NZE 1/5/94

ESF CONSTRUCTION PHASE (NON-DEFERRABLE) TESTS

I. North Ramp Pad Area Construction:
   1. Geological Mapping of Surface Exposures

II. North Ramp Starter Tunnel:
   1. Geologic Mapping (Drill/Blast)
   2. Limited Consolidation Sampling
      -Mineralogy/Petrology
      -Chloride/Chlorine-26
      -Matrix Hydrologic Properties
   3. Perched Water (Contingency)
   4. Construction Monitoring Activities

III. North Ramp and TSw2 Main Drift (TBM Excavation)
   1. Geologic Mapping
   2. Consolidated Sampling
   3. Perched Water (Contingency)
   4. Upper Tiva Radial Boreholes (Anisotropy)
   5. Hydrochemistry
   6. Hydrologic Properties of Major Faults (Initial Geothermal Phase)
   7. Construction Monitoring Activities

CURRENT ESF TESTING STATUS

Two in Situ Test Activities are fully planned for implementation in ESF North Ramp Alcove #1 (SCP Activities 8.3.1.2.2.3.3; 8.3.1.2.2.4.8)

- Hydrochemistry Testing (Ongoing)
- Anisotropy Radial Borehole Testing (Scheduled to begin Jan. '94)

Three Construction-Phase tests first appearing in North Ramp at or beyond the Bow Ridge Fault are scheduled for planning completion by the Summer of 1994 (Package 2C) (SCP Activities 8.3.1.2.2.3.10; 8.3.1.15.1.1,.2,.3,.4; 8.3.1.15.1.5.1).

- Hydrologic Properties Major Faults
- Laboratory Thermal Properties
- Excavation Investigations

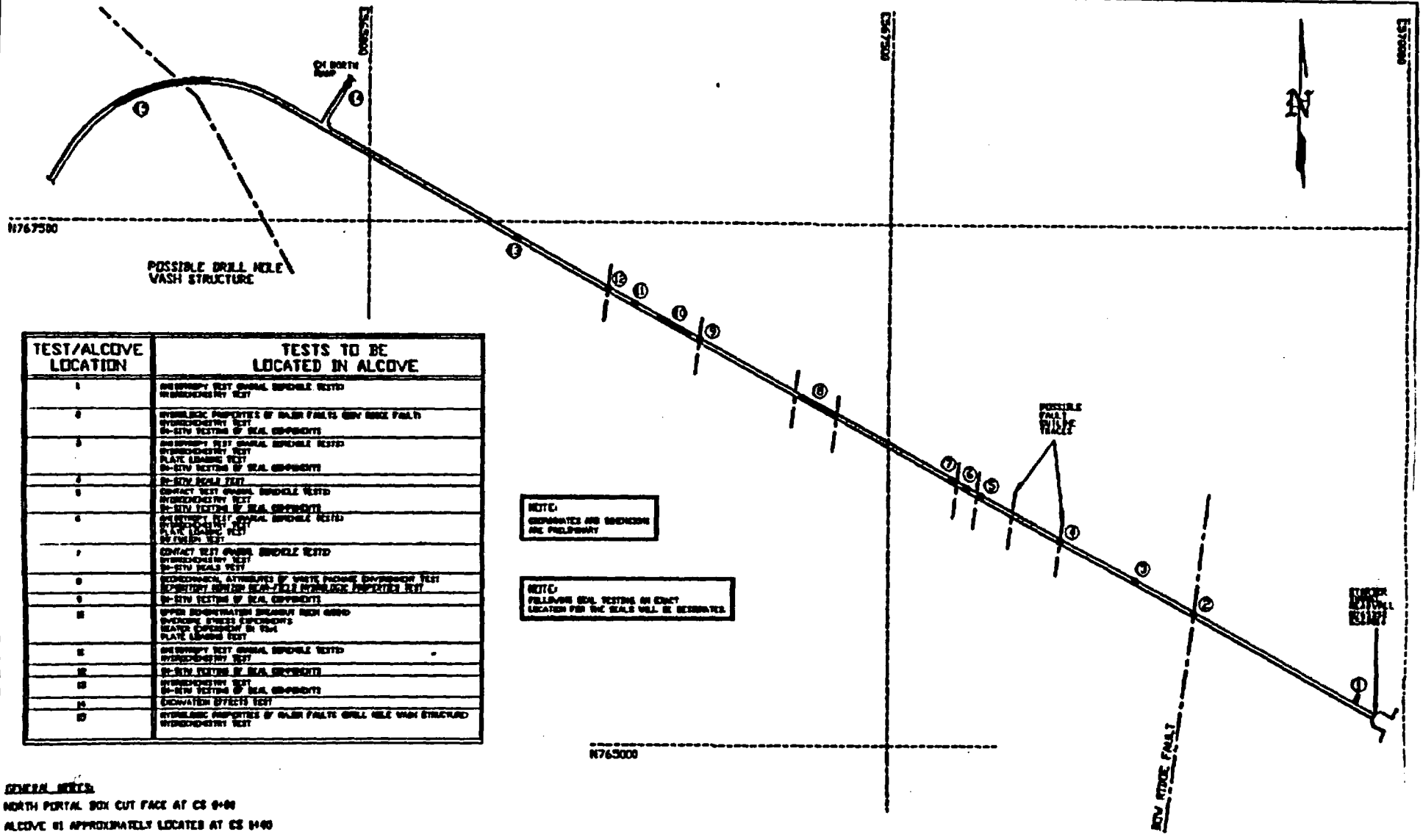

TEST/ALCOVE LOCATION	TESTS TO BE LOCATED IN ALCOVE
1	[illegible] TEST (ANNUAL SPECIMEN TESTED) HYDROCHEMISTRY TEST
2	HYDRAULIC PROPERTIES OF MAJOR FAULTS (BOW RIDGE FAULT) HYDROCHEMISTRY TEST IN-SITU TESTING OF SEAL COMPONENTS
3	[illegible] TEST (ANNUAL SPECIMEN TESTED) HYDROCHEMISTRY TEST PLATE LOADING TEST IN-SITU TESTING OF SEAL COMPONENTS
4	IN-SITU SEALS TEST
5	CONTACT TEST (ANNUAL SPECIMEN TESTED) HYDROCHEMISTRY TEST IN-SITU TESTING OF SEAL COMPONENTS
6	[illegible] TEST (ANNUAL SPECIMEN TESTED) HYDROCHEMISTRY TEST PLATE LOADING TEST [illegible] TEST
7	CONTACT TEST (ANNUAL SPECIMEN TESTED) HYDROCHEMISTRY TEST IN-SITU SEALS TEST
8	GEOMECHANICAL ATTRIBUTES OF WHITE PINCHOT DISTURBANCE TEST [illegible] HYDRAULIC PROPERTIES TEST
9	IN-SITU TESTING OF SEAL COMPONENTS
10	UPPER BOOMERANGER BREAKOUT ROCK MASS [illegible] STRESS EXPERIMENTS HEATED [illegible] IN TUFF PLATE LOADING TEST
11	[illegible] TEST (ANNUAL SPECIMEN TESTED) HYDROCHEMISTRY TEST
12	IN-SITU TESTING OF SEAL COMPONENTS
13	HYDROCHEMISTRY TEST IN-SITU TESTING OF SEAL COMPONENTS
14	EXCAVATION EFFECTS TEST
15	HYDRAULIC PROPERTIES OF MAJOR FAULTS (DRILL HOLE WASH STRUCTURE) HYDROCHEMISTRY TEST

NOTE:
COORDINATES AND DIMENSIONS ARE PRELIMINARY

NOTE:
FOLLOWING SEAL TESTING AN EXACT LOCATION FOR THE SEALS WILL BE DESIGNATED

GENERAL NOTES:

NORTH PORTAL BOX CUT FACE AT CS 0+00

ALCOVE #1 APPROXIMATELY LOCATED AT CS 1+00

TWENTY FIVE HUNDRED FEET GRID. COORDINATES ARE BASED ON THE NEVADA STATE COORDINATE SYSTEM, CENTRAL ZONE.

DIMENSIONS AND ELEVATIONS ARE SHOWN IN METERS. METERS ARE ROUNDED TO ONE DECIMAL PLACE. WHERE DISCREPANCIES BETWEEN ELEVATIONS AND GRADIENTS OCCUR DUE TO ROUNDING, ELEVATIONS WILL GOVERN.

THE BASIS FOR THE TEST ALCOVE LOCATIONS IS THE ESF DR YMP/CC-0013 REV 5/31-91.

THE GEOLOGICAL STRUCTURAL FEATURES ARE BASED ON THE SAIC PRELIMINARY CROSS SECTION CC-CC, DATE 5/5-91.

ACTUAL TEST ALCOVES WILL BE LOCATED IN THE FIELD AS GEOLOGY IS REVEALED BY EXCAVATION. ALCOVE LOCATIONS SHOWN ARE APPROXIMATIONS.

AN AREA OF LENGTH TO BE DETERMINED BEHIND AN ADVANCING TBM WILL HAVE THE UTILITIES LOCATED IN A MANNER TO PERMIT OPTIMIZED MAPPING OF THE RAMP PERIMETER.

SEE CALCULATION ST-SA-001 FOR MAJOR COORDINATES AND VERTICAL CURVE DATA.

LEGEND:

FAULT ZONE
RAMP CONFIGURATION
REFERENCE GRID
TEST LOCATION (CERTAIN) ●
TEST LOCATION (DEFERRED) ●
TEST LOCATION (IN REVIEW FOR DEFERRAL) ●

GRAPHIC SCALE
0 76.2 (250) 152.4 (500) 304.8 m (1000 FT)

FOR REFERENCE DRAWINGS INDEX SEE DRAWING YMP-025-1-CIVIL-001

LOS ALAMOS NATIONAL LABORATORY
TEST COORDINATION OFFICE - YUCCA MOUNTAIN PROJECT

PROJECT: NORTH RAMP AND EXISTING/PROPOSED TEST LOCATION ILLUSTRATION

CAD FILE: NRMPOLB.DWG	AUTOCAD R12	SIZE A	SCALE NOTED	REVISION A
DRN. BY: R.J. WEAVER	APPROVED BY: ON FILE N.E. ELKINS/R.B. OLIVER		DATE DRN 12/20/93	
NOTES: ADMINISTRATIVE/ILLUSTRATIVE USE ONLY			PLOT DATE 1-4-94	

U.S. DEPARTMENT OF ENERGY

OCRWM

YUCCA MOUNTAIN

YUCCA MOUNTAIN SITE CHARACTERIZATION PROJECT

PROPOSED ENHANCEMENTS TO THE BASELINE ESF CONFIGURATION

PRESENTED TO

PACKAGE 2B 90% DESIGN REVIEW TEAM

PRESENTED BY

DAN McKENZIE

ESF PROJECT ENGINEER

DEPARTMENT OF ENERGY · UNITED STATES OF AMERICA

JANUARY 5, 1994

THE PROPOSED ENHANCEMENT WOULD:

- Flatten the grades in the Topopah Spring Level (TSL) access ramps and main drift to below 3%
- Eliminate the East and West cross drifts, replacing them with North and South Ramp extensions
- Re-orient the TSL Main Drift to a generally North-South alignment
- Increase the overall excavated length of ESF drifting by approximately 9%

REASONS FOR THE CHANGE

- Enhance the safety, constructability, and operability of the Exploratory Studies Facility
- Preserve flexibility in the design of the potential repository, specifically:
  - Allows emplacement drifts to be farther above the saturated zone
  - Allows development of concepts in which emplacement drifts do not cross the Ghost Dance fault zone
- Allows the use of rail haulage in the ESF upper level construction and operation, and preserves the rail option for a potential repository

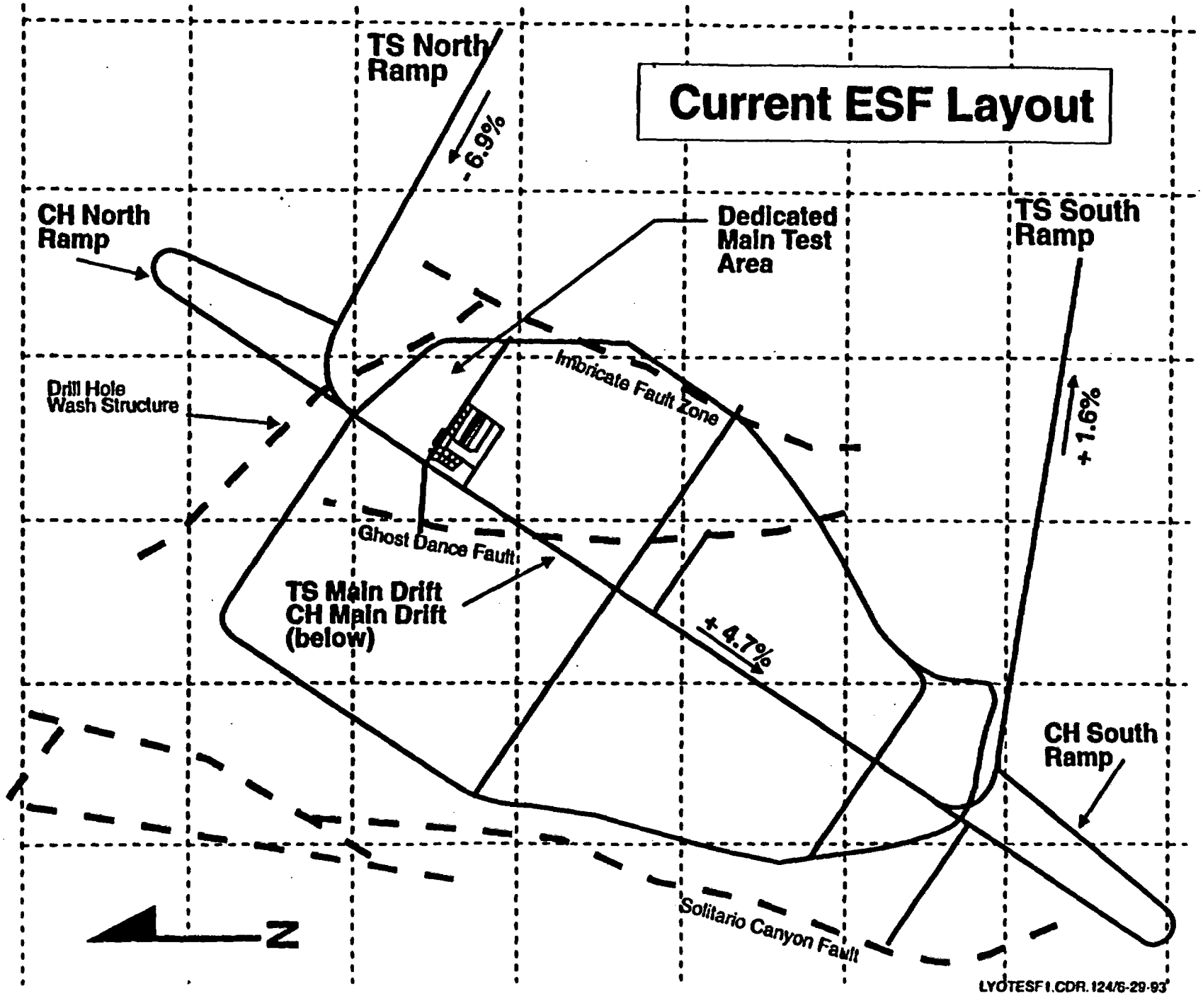
Current ESF Layout
TS North Ramp
-6.9%
CH North Ramp
Dedicated Main Test Area
TS South Ramp
Drill Hole Wash Structure
Imbricate Fault Zone
+1.6%
Ghost Dance Fault
TS Main Drift
CH Main Drift
(below)
+4.7%
CH South Ramp
Solitario Canyon Fault
N
LYOTESF1.CDR.124/6-29-93

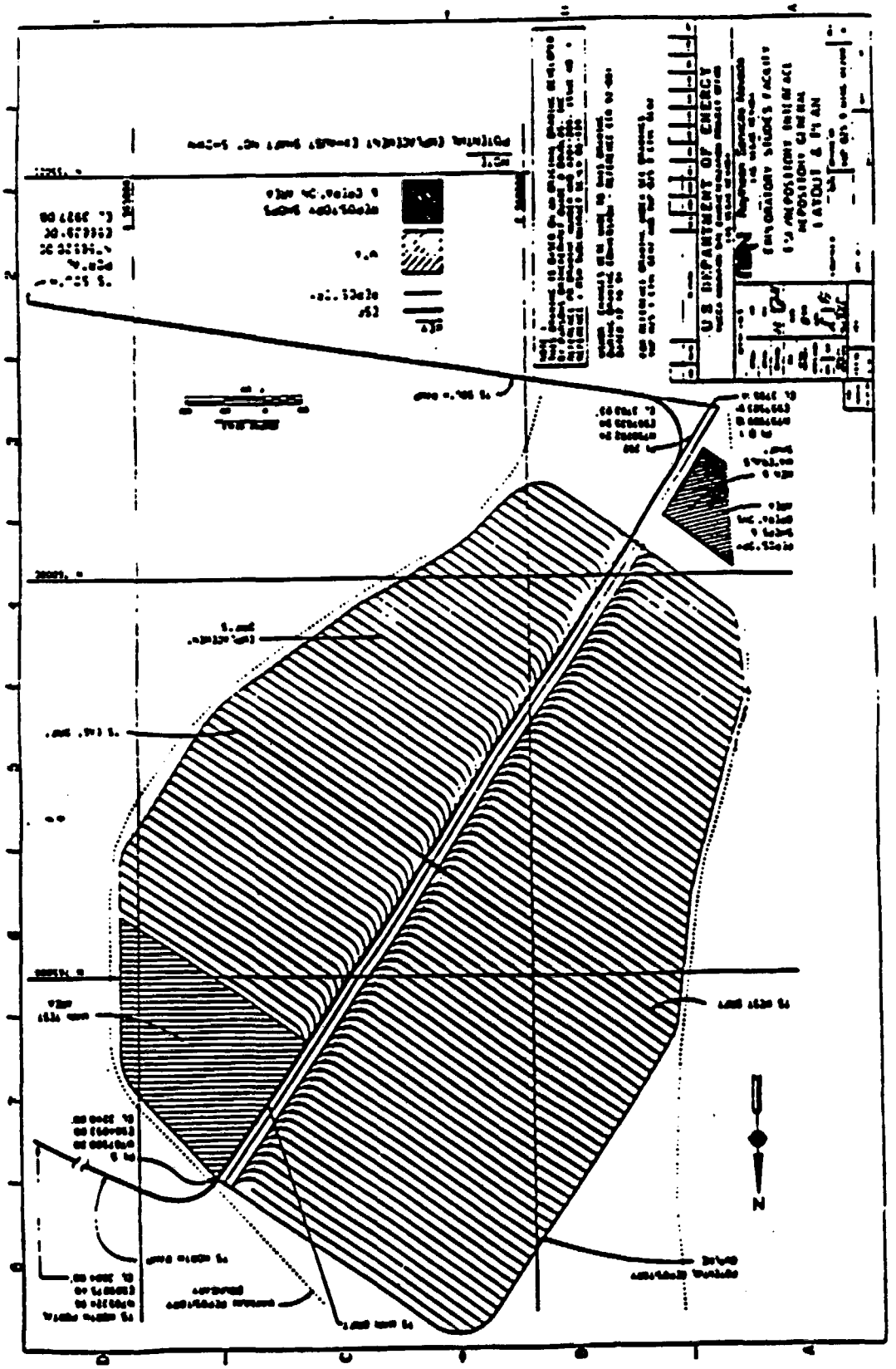

DCACDSKB14 125 NWTRB/7 13/14 93

(BEST AVAILABLE COPY)

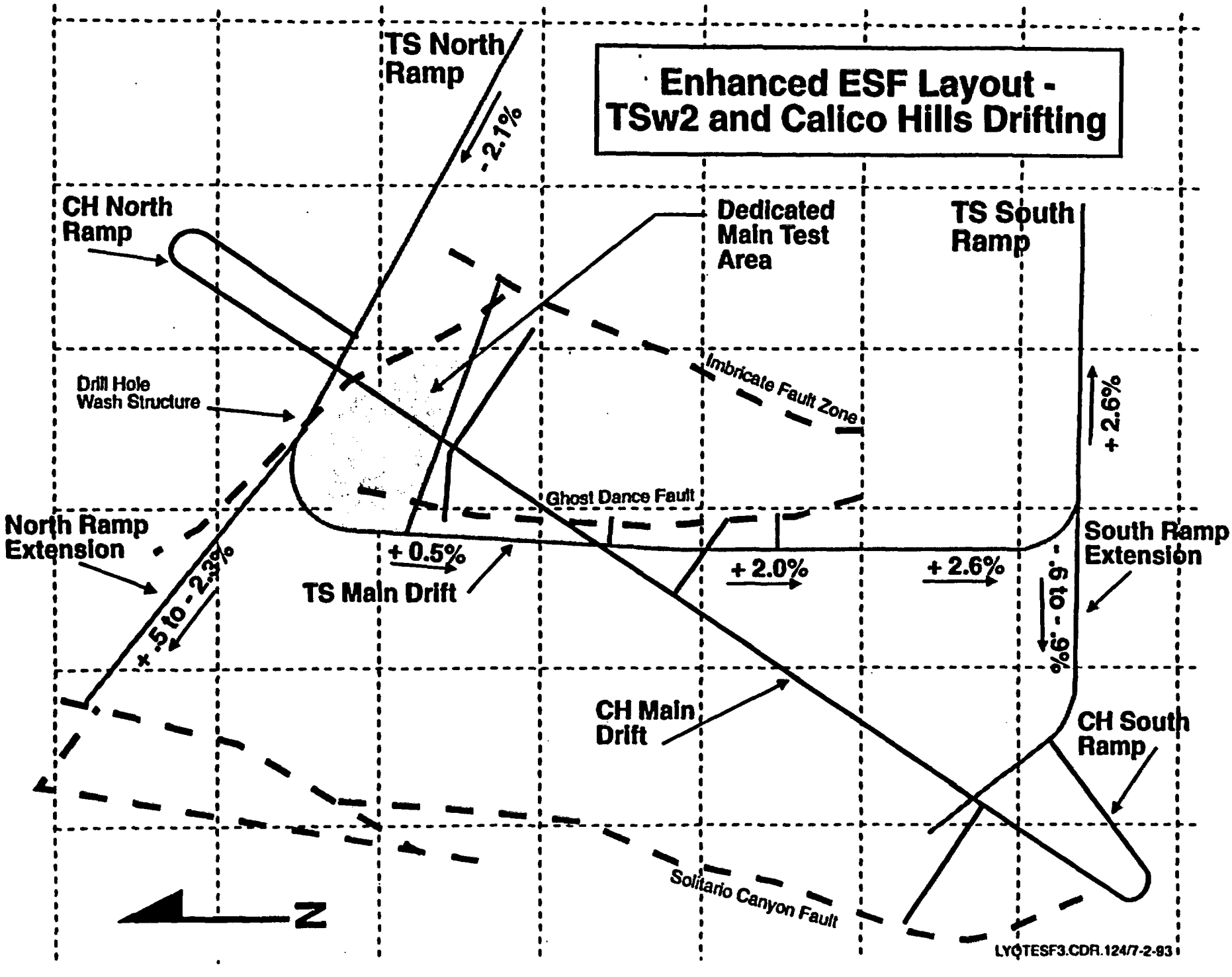
Enhanced ESF Layout -
TSw2 and Calico Hills Drifting
TS North Ramp
-2.1%
CH North Ramp
Dedicated Main Test Area
TS South Ramp
Drill Hole Wash Structure
Imbricate Fault Zone
+ 2.6%
Ghost Dance Fault
North Ramp Extension
+ .5 to - 2.3%
+ 0.5%
TS Main Drift
+ 2.0%
+ 2.6%
South Ramp Extension
CH Main Drift
CH South Ramp
Solitario Canyon Fault
N
LYCTESF3.CDR.124/7-2-93

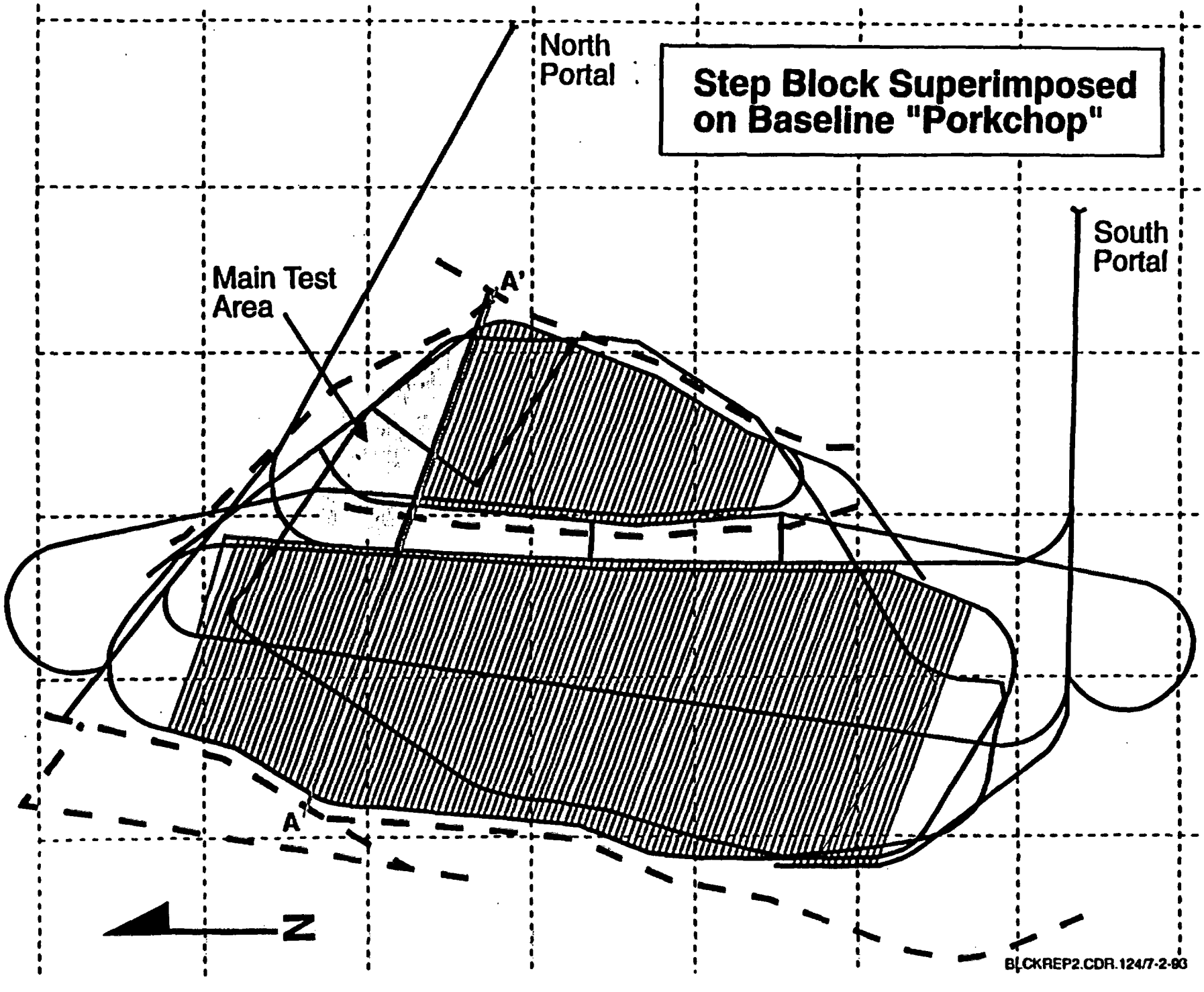
Step Block Superimposed on Baseline "Porkchop"
North Portal
South Portal
Main Test Area
A'
A
N
BLCKREP2.CDR.124/7-2-93

Section A - A'

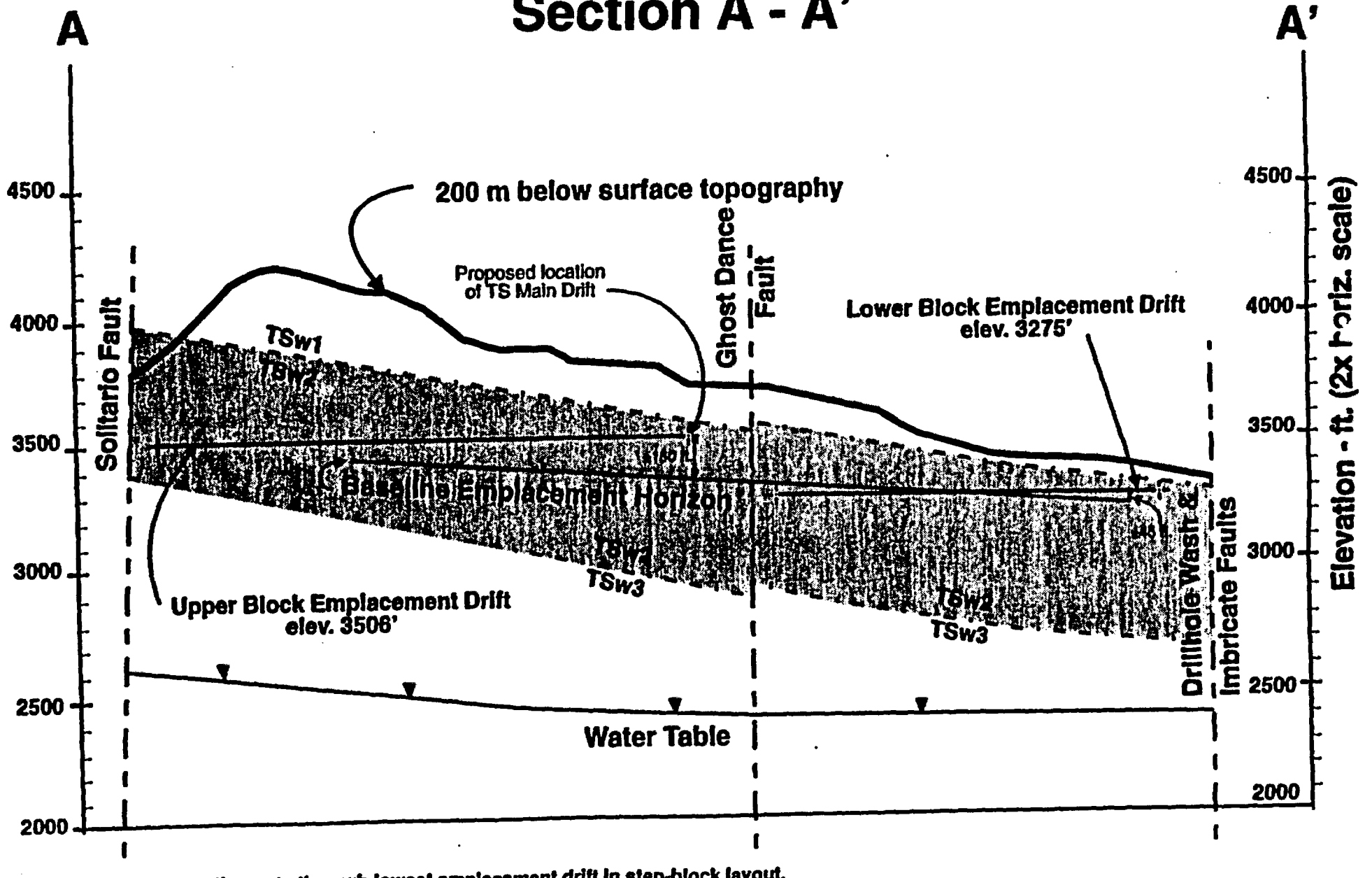

Note: Plane of section cuts through lowest emplacement drift in step-block layout.

SECTA-AR.CDR.124/6-29-93

STATUS OF CHANGE

- The design analysis describing the change (B00000000-01717-0200-00089 Rev 1) has been baselined at Level 3
- A Level 2 Change Request is in preparation

Civilian Radioactive Waste
Management System

Management & Operating
Contractor

TRW

TRW Environmental Safety
Systems Inc.

ESF SUBSURFACE DESIGN

INTRODUCTION OF EXPLORATORY STUDIES FACILITY

90% DESIGN REVIEW - PACKAGE 2B TITLE II

Paul W. McKie
January 5, 1994

B&W Fuel Company
Duke Engineering & Services, Inc.
Fluor Daniel, Inc.

INTERA Inc.
JK Research Associates, Inc.
E. R. Johnson Associates, Inc.

Logicon RDA
Morrison Knudsen Corporation
Woodward-Clyde Federal Services

SCOPE OF THIS REVIEW

- ESF Design Package 2B - 90% Review
  - Design studies and procurement specifications for ventilation system and electrical systems to support TBM operations.

Civilian Radioactive Waste
Management System

Management & Operating
Contractor

TRW

TRW Environmental Safety
Systems Inc.

ESF Subsurface Design

90% DESIGN REVIEW

PACKAGE 2B

Jerry L. Naaf
January 5, 1994

B&W Fuel Company
Duke Engineering & Services, Inc.
Fluor Daniel, Inc.

INTERA Inc.
JK Research Associates, Inc.
E. R. Johnson Associates, Inc.

Logicon RDA
Morrison Knudsen Corporation
Winston & Strawn
Woodward-Clyde Federal Services

PURPOSE OF REVIEW

- Provide assurance that the design is:
  - Technically correct
  - Complies with upper-tier requirements

SCOPE OF REVIEW

- Design Output Documents:
  - Design drawings
  - Design specifications
  - Design analyses/calculations
  - Basis for Design (BFD)

DESIGN PROCESS CONTROL FLOWCHART

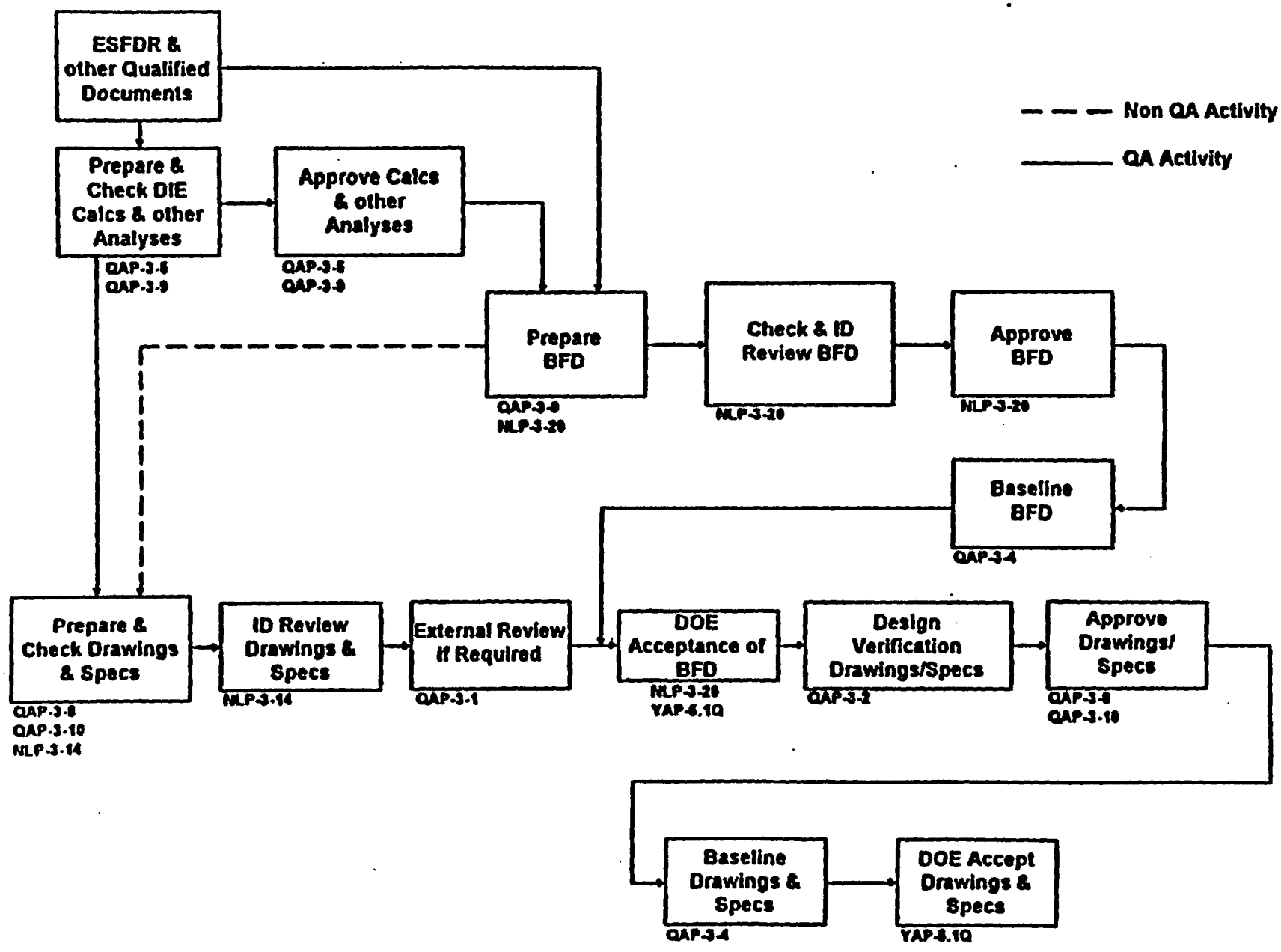

ADMINISTRATIVE REQUIREMENTS

- Design performed in compliance with M&O QA program and all applicable Quality Administrative Procedures (QAP).
- Design performed in accordance with FY 1994 ESF Engineering Plan, Revision 0, and the ESF Design Group Engineering Practices Document, Revision 0.
- QA classifications are "TBV" on drawings and specifications pending release of DIE.

TECHNICAL DESIGN REQUIREMENTS

- Basis for Design (BFD) Document

  (Includes input from ESFDR, DIEs, and other sources)

90% DESIGN REVIEW - PACKAGE 2B
DESIGN TASKS

Subsurface Design - Bob Saunders - 794-1865

- Muck Storage study
- Excavation study
- Subsurface Railroad System
- Subsurface locomotives & rail cars
- Concrete invert segments

90% DESIGN REVIEW - PACKAGE 2B
DESIGN TASKS

Mechanical Design - Don Vanica - 794-1996

- Compressed Air System analysis
- Fire Hazards analysis
- Fire Protection analysis
- Wastewater Collection System analysis
- Ventilation System

90% DESIGN REVIEW - PACKAGE 2B
DESIGN TASKS

Electrical/Instrumentation Design -

Bill Reed - 794-7371

- Switchgear
- Metal-clad cable code review analysis
- Subsurface grounding analysis
- Subsurface Trolley System
- Subsurface Monitoring & Warning System
- Control System

90% DESIGN REVIEW - PACKAGE 2B
DESIGN TASKS

Structural Design - Ken Herold - 794-5393

- TBM tunnel precast concrete segments
- Conveyor Bend Tower & Bent #1 foundations
- Transfer Tower foundation
- Mapping Gantry

PACKAGE 2B DELIVERABLES

Discipline	Number		
	Drawings	Specs	Calc/Analysis
Subsurface	2	6	5
Mechanical	-	2	5
Electrical	17	3	6
C/S	4	8	3
DIE	-	-	1
BFD	-	-	1
Totals	23	19	21

90% DESIGN REVIEW - PACKAGE 2B
DESIGN TASKS

For Each Design Task:

- Study/analysis
- Calculation
- Specification(s)
- Drawings(s)

90% DESIGN REVIEW - PACKAGE 2B
DESIGN TASKS

Design Analysis/Calcs/Studies - QAP-3-9

Address following for each:

1) Design analysis cover sheet
2) Purpose
3) Quality Assurance
4) Design method
5) Codes & Standards

90% DESIGN REVIEW - PACKAGE 2B
DESIGN TASKS

Design Analysis/Calcs/Studies - QAP-3-9

Address following for each: (continued)

6) Design inputs

7) Criteria

8) Assumptions (basis of, also)

9) Computer programs

10) Design analysis

11) Conclusions

90% DESIGN REVIEW - PACKAGE 2B
DESIGN TASKS

Specifications - QAP-3-8

Address following for each:

1) Section includes
2) Quality Assurance
3) System description (if included)
4) Products
5) Execution
6) Submittals and notifications

90% DESIGN REVIEW - PACKAGE 2B
DESIGN TASKS

Drawings - QAP-3-10

Listing of each drawing by SSC. Point out any special instructions to Contractor, Design Features and Design Inputs.

Review Comments

- Resolve questions and concerns during presentation so they need not be "comments" outstanding.
- Mandatory comments
  - Technically incorrect design
  - Programmatic or procedure violations

ESF Package 2B 90 % Design Review Determination of Importance Evaluations (DIEs)

- Objectives
- Content
- Results of Package 2B DIE

Peter Hastings, DIE Manager
TES3/550 794-1946

Objectives

- provide indication of a specific item's or activity's potential impact on safety or waste isolation
- provide for the application of QA controls appropriate to the results of that determination
- satisfy 10CFR60.151 and 10CFR60.15

DIE Results

- Documentation of permanence
  - part of potential pre- or post-closure repository?
  - determined by design organization based on ESFDR
- Importance
  - important to radiological safety (IRS)
  - important to waste isolation (ITWI)
  - ITWI as indicated by potential test interference
- Control requirements
  - QA controls appropriate to importance of item or activity

DIE Traceability

- DIEs provide for selection of minimum QA controls to satisfy 10CFR60.15 (ESFDR 3.2.1.4 B1a)
- Control requirements are transmitted as a design input to ESF Design via QA procedure (QAP-3-12)
- QA control requirements become part of BFD (Basis for Design) document

ESF Package 2B 90% Design Review DIE

- DIE for Procurement of Temporary Items
- Conveyor Transfer Tower, currently part of Package 2B, will be evaluated in a subsequent DIE following its redesign

TBDs/TBVs

- TBDs (To Be Determined): None
- TBVs (To Be Verified)
  - DIE is preliminary, and refers to Rev. 06 of QAP-2-3 (Classification of Items), currently in review/revision. DIE states that all items evaluated are temporary, and are therefore not subject to the classification requirements of QAP-2-3. This is noted as ***(TBV)*** in the DIE.

Package 2B Conclusions

- No IRS items or activities: DIE applies only to procurement of temporary items
- No ITWI items or activities: DIE applies only to procurement of temporary items
- DIE applies only to the procurement of temporary items, and not to the installation, construction, modification, maintenance, or operation of these or any other items

Civilian Radioactive Waste
Management System

Management & Operating
Contractor

TRW

TRW Environmental Safety
Systems Inc.

ESF TITLE II DESIGN - PACKAGE 2B

SUBSURFACE DESIGN

Name: R. S. Saunders

Date: January 5, 1994

B&W Fuel Company
Duke Engineering & Services, Inc.
Fluor Daniel, Inc.

INTERA Inc.
JK Research Associates, Inc.
E. R. Johnson Associates, Inc.

Logicon RDA
Morrison Knudsen Corporation
Woodward-Clyde Federal Services

Package 2B - Subsurface Design

Design Team:

Robert Saunders	Subsurface Design Lead Engineer
Jeff Steinhoff	Muck Storage Study Subsurface Railroad System Subsurface Locomotives and Rail Cars Concrete Invert Segments
Chuck Garrett	ESF Secondary Excavation Methods
Bob Skorseth	Subsurface Locomotives and Rail Cars
Jerry Keifer	Subsurface Locomotives and Rail Cars

Package 2B - Subsurface Design

Package 2B Subsurface Design Elements Include:

- **Muck Storage**
- **ESF Secondary Excavation Methods**
- **Subsurface Railroad System**
- **Subsurface Locomotives and Rail Cars**
- **Concrete Invert Segments**

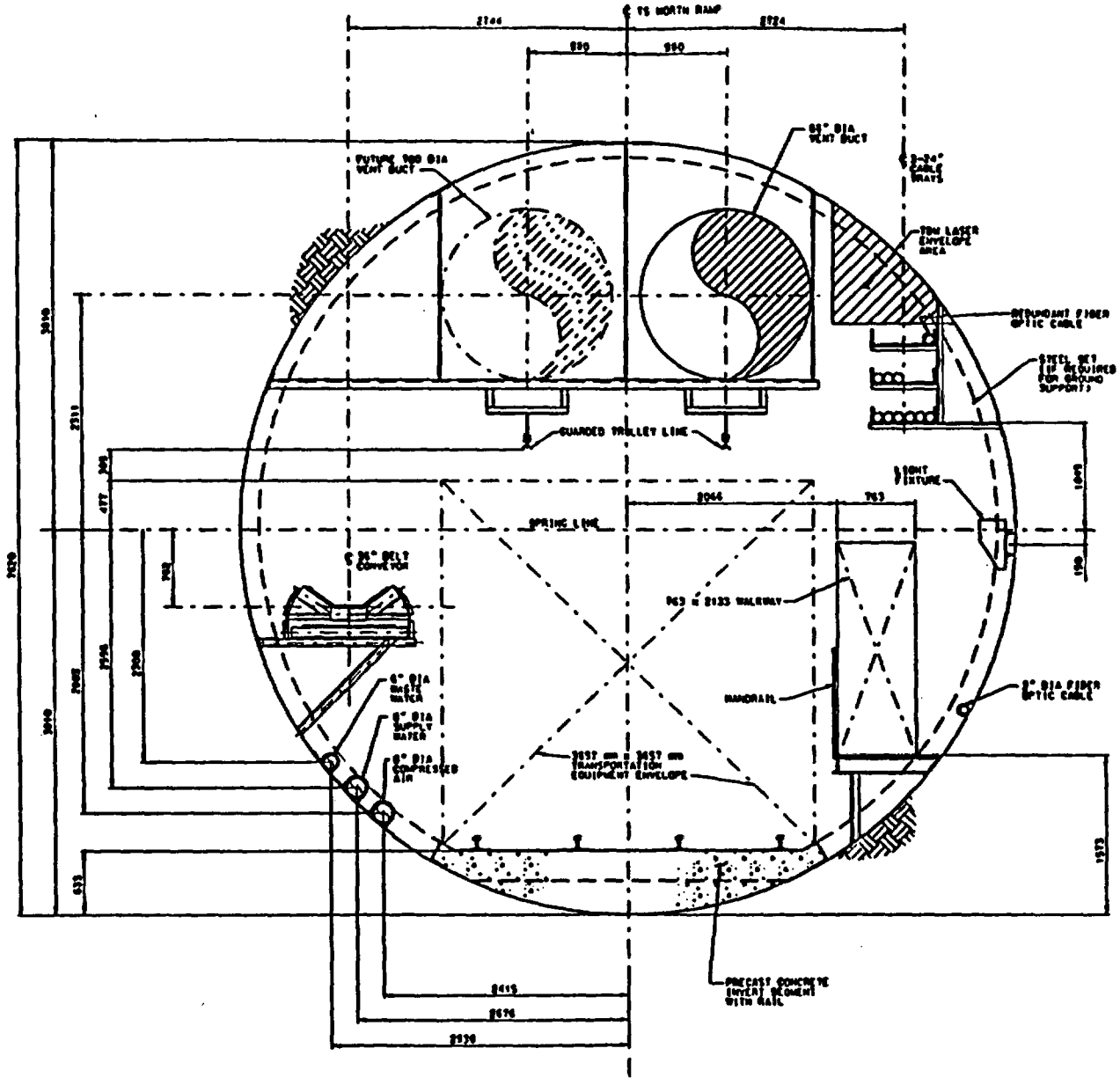

TYPICAL CROSS SECTION OF 7.620 m DIA RAMP

Muck Storage (1)

Section Includes:

- **Muck Storage Study, BABCCOOOO-AA-12-00008-00**
- **This Study Was Revised to Incorporate Comments From The 50% Design Review**

Purpose:

- **To Determine Feasibility of Segregating and Storing Excavated Rock By Type for Eventual Backfill and Sealing Material**

Muck Storage (2)

Design Method:

- Compared Tunnel Alignments to Stratigraphic Sections
- Determined Muck Volumes and Tonnages For Each Rock Type

Study Inputs:

- Letter SNL to DOE, Dated Feb 2, 1993, re Separation of Muck for ESF Backfill and Sealing

Criteria:

- ESFDR

Assumptions:

- Backfill Material Considered Quality Affecting Pending DIE

Muck Storage (3)

Conclusions:

- Impossible to Separate Different Rock Types In a TBM Excavated Face
- Not Practical To Separate Welded and Non Welded
  - Non-Welded Tuff Amounts to Less Than 1% of Total
  - Mixed Welded & Non-Welded Amounts To 6.28% of Total
- Two Surface Storage Piles
  - Upper Tiva Canyon (TC) and Topopah Spring (TS) - Welded and Unwelded
  - Calico Hills (CH) - Welded and Unwelded

ESF Secondary Excavation Methods (1)

Section Includes:

- ESF Excavation Study, BABEOOOOO-01717-6700-00008-00

Purpose:

- To Identify Suitable Methods For Secondary ESF Excavations
  - Test & Operational Equipment Alcoves
  - Exploratory Drifts
  - Refuge Station, Traffic Cutouts, & Sumps

Study Method:

- Reviewed Project Requirements Documents and Applicable Mining & Tunnelling Literature
- Consulted Equipment Suppliers and Academics

ESF Secondary Excavation Methods (2)

Design Requirements:

- **ESFDR - Excavation Methods Shall Limit Potential For Creating Preferential Pathways For Ground Water**
  - Excavation Overbreak Limitations
  - Mechanical Excavation Methods
  - Drill-and-Blast Excavation Methods
  - Controlled Blasting Methods
- **ESF Test Design Requirements**
- **Regulatory Safety Requirements**
- **Operational Requirements**

ESF Secondary Excavation Methods (3)

Design Analysis:

- Mechanical Properties of Intact Rock
- Excavation Method Performance Capabilities
- Excavation Methods
  - TBM
  - Roadheader
  - Mobile Miner
  - Alcove Excavator
  - Continuous Miner
  - Hydraulic Hammer
  - Penetrating Cone Fracture Excavation
  - Controlled Drill and Blast

Study done by M&O; did not involve Reece & Morris Knudsen

ESF Secondary Excavation Methods (4)

Conclusions:

- **Hardness of Welded Tuff Precludes Use of Conventional Continuous Miners & Roadheaders**
- **TBM Will Be Used Wherever Practicable**
- **Alternative Mechanical Excavator Technologies Are Not Considered Viable For ESF Excavation At This Time**
- **Controlled Drill and Blast Methods Will be Used For Most ESF Secondary Excavation**

Subsurface Railroad System

Package 2B Railroad System Design Covers:

- **General Arrangement Of Trolley Line System (Analysis), BABFCCOOO-01717-0200-00151**

  Note: The Trolley Line Specification By Electrical Design Group

- **Subsurface Railroad Trackwork (Specification), BABFCCOOO-01717-6300-02452**

- **Subsurface Railroad Turnouts (Specification), BABFCCOOO-01717-6300-02453**

Subsurface Railroad System
Trolley System Analysis (1)

Purpose:

- To Define Requirements For The Subsurface Trolley Line System

Quality Assurance:

- Not Important To Waste Isolation Or Radiological Safety. Commercial Grade Materials Acceptable (TBV)

Study Method:

- Evaluated Project Requirements Documents and Applicable Literature
- Evaluated Suppliers Equipment & Material Specifications
- Discussions With Construction Contractor & Other project Participants

Subsurface Railroad System
Trolley System Analysis (2)

Design Inputs:

- Transportation Of People & Supplies, BABFCCOOO-01717-6700-00002

Criteria:

- Developed From ESFDR

Assumptions:

- Trolley Line System Not Considered Quality Affecting Pending Determination of Importance Evaluation

Subsurface Railroad System
Trolley System Analysis (3)

Conclusions:

- Trolley Line Shall Be Guarded Over Entire Length
- Trolley Line 4039 mm (13 ft-3 in) Above Top Of Rail
- Trolley Wire Sections Maximum of 762 m (2,500 ft)
- Electric Load 600 kw (800 hp)
- Rigid Copper Conductor For Trolley Line
- 250 Volt DC System

Subsurface Railroad System
Subsurface Railroad Trackwork Specification (1)

Section Includes:

- **Furnish and Design Track Material To Support The TBM Operation**
  - **Temporary Track To Transport TBM From Portal To The Launch Chamber Located At End of Starter Tunnel**
  - **Permanent ESF Track From Portal To End Of Starter Tunnel**
  - **Permanent ESF Track In TBM Excavated Tunnel**
- **Railroad Trackwork Specification Based On General Arrangement, Invert Segment, Rail Weight, and Track Analysis, BABFCCOOO-01717-0200-00137**

Subsurface Railroad System
Subsurface Railroad Trackwork Specification (2)

Quality Assurance:

- Not Important To Waste Isolation Or Radiological Safety. (TBV)
  Commercial Grade Materials Acceptable
- Acceptance - Dimensional/Visual Inspections
- Field Verification - Dimensional/Visual Inspections
- Products Shall Meet Specified RAM Requirements

Subsurface Railroad System
Subsurface Railroad Trackwork Specification (3)

System Description:

- **Temporary Track To Transport TBM and Trailing Gear From Surface Assembly Pad To Starter Tunnel Face (Contractor Responsible For Surface Section Of Temporary Track)**
  - **TBM Transported On 200 in Gauge Track**
  - **TBM Track Consists Of Steel Channels Set in Concrete**
  - **36 in Gauge Track For Rail Haulage**
  - **Temporary Track Will Be Removed Or Covered By Concrete When Permanent ESF Track Installed**

Subsurface Railroad System
Subsurface Railroad Trackwork Specification (4)

System Description (Continued)

- Permanent ESF Track From Portal To Launch Chamber
  - Double Track installed in Starter Tunnel On Cast In Place Concrete
  - Track Specifications As For Permanent Track
- Permanent ESF Track Installed In The TBM Bored Section Of Tunnel
  - Double Track System Installed As TBM Advances
  - 36 in Equal Spacing Between Rails Will Allow Operation on Center Track
  - TBM Trailing Gear Will Run On The Permanent Track

Subsurface Railroad System
Subsurface Railroad Trackwork Specification (5)

Products:

- Permanent Track Part Of An Electrified Rail System
- Material Quantities To Be Determined By Constructor From Layout Drawings
- Temporary Track
  - Steel Channel Section
  - 85 lb Track (New Or Secondhand)
  - Ties & Attachments
  - Joint Bars
  - Track Bolts

Subsurface Railroad System
Subsurface Railroad Trackwork Specification (6)

Products (Continued)

- **Permanent Track**
  - 85 lb Track (New Or Secondhand)
  - Rail Fixation System (Ties & Attachments)
  - Joint Bars
  - Track Bolts
  - Rail Bonding

Execution:

- **On-Site Installation Assistance**

Subsurface Railroad System
Subsurface Railroad Trackwork Specification (7)

Submittals:

- Technical Proposal With Drawings And Description of Items
- Verification of Material Test Reports For New Rail, or Verification of Inspection For Used Rail
- Installation Manuals

Notification:

- Supplier To Notify Contractor of Omissions, Discrepancies, and Requests For Clarification In Writing

Subsurface Railroad System
Subsurface Railroad Turnouts Specification (1)

Section Includes:

- Furnishing Design and Fabrication of Track Turnouts

Quality Assurance:

- Not Important To Waste Isolation Or Radiological Safety. (TBV) Commercial Grade Materials Acceptable
- Acceptance - Dimensional/Visual Inspections
- Field Verification - Dimensional /Visual Inspections
- Products Shall Meet Specified RAM Requirements

Subsurface Railroad System
Subsurface Railroad Turnouts Specification (2)

System Description:

- Turnouts to Switch Trains From One Set Of Tracks To Another
  - From Inbound To Outbound and Vice Versa
  - From Inbound To Center Track
  - From Outbound To Center Track
  - Left Hand Turnouts To Side Excavations
  - Right Hand Turnouts To Side Excavations

Subsurface Railroad System
Subsurface Railroad Turnouts Specification (3)

Products:

- Turnout Panels Will Form Part Of An Electrified Rail System
- New Materials Specified
- Turnouts To Be Supplied In Prefabricated Panels Designed To Fit Flat Part Of Invert Segments
- Panel Dimensions No More Than 1400 mm x 9144 mm (55 in x 30 ft)
- Rail Attached To Panels With Pandrol "e" Type Clips
- Electrically Operated Throws — should/could be manual. (electric may add maint. problem)

Subsurface Railroad System
Subsurface Railroad Turnouts Specification (4)

Execution:

- Supplier To Provide Installation Assistance

Submittals:

- Technical Proposal With Drawings And Description of Items To Be Supplied
- Installation Manuals

Notification:

- Supplier To Notify Contractor of Omissions, Discrepancies, and Requests For Clarification In Writing

Subsurface Locomotives and Rail Cars

- Rail Haulage Locomotive & Rolling Stock Analysis, BABFCCOOO-01717-0200-00166
- Rail Cars - Transportation of Muck, Materials & Personnel Specification, BABFCCOOO-01717-6300-14960
- Trolley/Battery Locomotives Specification, BABFCCOOO-01717-6300-14961
- Subsurface Diesel Locomotive Specification, BABFCCOOO-01717-6300-14962

Subsurface Locomotives and Rail Cars
Rail Haulage Locomotive & Rolling Stock Analysis (1)

Purpose:

- To Determine ESF Requirements For Locomotives and Rail Cars

Quality Assurance:

- Locomotives and Rail Cars Are Not Considered Important To Radiological Safety Or Waste Isolation (TBV)

Design Method:

- Analytical Method

Subsurface Locomotives and Rail Cars
Rail Haulage Locomotive & Rolling Stock Analysis (2)

Design Inputs:

- Transportation Of People & Supplies, BABFCCOOO-01717-6700-00002
- Subsurface Ventilation Analysis, BABFADOOO-01717-0200-00001
- ESF Basis For Design Document, BABOOOOOO-01717-6300-00002

Criteria:

- ESF Basis For Design Document, BABOOOOOO-01717-6300-00002

Subsurface Locomotives and Rail Cars
Rail Haulage Locomotive & Rolling Stock Analysis (3)

Assumptions:

- Analysis Assumed Non QA Pending Determination of Importance Evaluation (DIE)
- Requirement #12 From ESF Starter Tunnel DIE Re Limits On Unrecovered Organics

Subsurface Locomotives and Rail Cars
Rail Haulage Locomotive & Rolling Stock Analysis (4)

Analysis:

- **Requirements Applicable To All Rail Cars & Locomotives**
  - All Rail Cars & Locomotives Equipped With Fail Safe Braking System
  - Compatible & Interchangeable Parts
  - Minimize Potential For Leaks & Spills Of Organic Materials
  - Safety Features To Meet Applicable Codes
  - Car Profile Dimensions - Maximum Width 1400 mm (55 in), To Fit Within 3657 mm X 3657 mm (12 ft x 12 ft) Transportation Window
  - Nameplates & Markings For Personnel Transportation

Subsurface Locomotives and Rail Cars
Rail Haulage Locomotive & Rolling Stock Analysis (5)

Analysis (Continued)

- Types Of Rail Cars Needed For TBM & ESF Operations Support

i. Supply/Utility Car
ii. Invert Segment Car
iii. Vent Tube Car
iv. Scissor Lift Car
v. Personnel Car
vi. Maintenance/Lube Car
vii. Explosive Car
viii. Sanitation Car
ix. Vacuum/Clean Up Car
x. Shotcrete Transport & Placement Car
xi. Drain Water Tank Car
xii. Cable Reel Deck/Car
xiii. Rail Mounted Drill Car
xiv. Muck Car
xv. Equipment Car

Subsurface Locomotives and Rail Cars
Rail Haulage Locomotive & Rolling Stock Analysis (6)

- Types Of Locomotives Required For TBM & ESF Operations Support
  - Trolley/Battery Locomotive
  - Diesel Locomotive

Conclusions:

- This Analysis Forms Input For Development Of Drawings and Specifications

Subsurface Locomotives and Rail Cars
Rail Cars - Transportation of Muck, Materials & Personnel Specification (1)

Section Includes:

- Performance Specification - Supplier To Design, Furnish, and Deliver Rail Cars In accordance with Specification

Quality Assurance:

- Not Important To Waste Isolation Or Radiological Safety. (TBV) Commercial Grade Materials Acceptable
- Acceptance - Dimensional/Visual Inspections
- Field Verification - Dimensional/Visual Inspections
- Products Shall Meet Specified RAM Requirements

Subsurface Locomotives and Rail Cars
Rail Cars - Transportation of Muck, Materials & Personnel Specification (2)

System Description:

- Surface & Subsurface Rail Operations To Support TBM and ESF Operations
- Two 36 in Gauge Tracks, 85 lb/yd Track, Maximum 3% Track Gradient
- Maximum Car Width 55 in, Transportation Envelope in TBM Excavated Tunnel = 3657 mm x 3657 mm (12 ft x 12 ft)
- TBM Transportation Corridor 1800 mm x 2350 mm (72 in x 93 in) Corridor on TBM Reduces to 1600 mm (64 in) For Cars 1, 2, & 3
- Minimum 150 mm (6 in) Clearances Required

Subsurface Locomotives and Rail Cars
Rail Cars - Transportation of Muck, Materials & Personnel
Specification (3)

System Description (Continued)

- Locomotive Weight 22,700 kg (25 Tons)
- Maximum Train Weight 77,300 kg (85 tons) Including Locomotive
- Provisions For Electric Power, Compressed Air, & Water Throughout Tunnel

Products:

- Commonality Of Components

Subsurface Locomotives and Rail Cars
Rail Cars - Transportation of Muck, Materials & Personnel Specification (4)

Products: (Continued)

- **Rail Cars - As Identified In Analysis with Exception That Shotcrete Cars & Drills For Jumbo To Be Specified Later**

  - Supply/Utility Car
  - Invert Segment Car
  - Vent Tube (Fan Line) Car -
  - Scissor Lift Car
  - Personnel Car
  - Maintenance/Lube Car
  - Explosive Box Deck
  - Sanitation Tank Deck
  - Vacuum Car
  - Water Tank Car
  - Cable Reel Deck
  - Rail Mounted Drill Jumbo
  - Muck Car
  - Equipment Car*

  * For Large & Heavy Equipment, Runs On Double Track (Four Rails)

Subsurface Locomotives and Rail Cars
Rail Cars - Transportation of Muck, Materials & Personnel
Specification (5)

Execution:

- Supplier to Assemble Rail Cars Prior To Shipment
- Supplier To Provide Checkout Documentation & Verify Final Assembly
- Rail Cars To Be Painted Safety Yellow
- Final Inspection & Acceptance By Constructor At Job Site

Submittal and Notification:

- Shop Drawings, Inspection Schedules, & Inspection Reports
- Supplier To Notify Contractor of Omissions, Discrepancies, or Requests For Clarification In Writing

Subsurface Locomotives and Rail Cars
Trolley/Battery Locomotives Specification (1)

Section Includes:

- Performance Specification
- Supplier To Design, Furnish, & Deliver Trolley/Battery Locomotives

Quality Assurance:

- Not Important To Waste Isolation Or Radiological Safety. (TBV) Commercial Grade Materials Acceptable
- Prevention and Mitigation of Organic Leaks & Spills
- Field Verification - Dimensional/Visual Inspections

System Description:

- As For Rail Cars

Subsurface Locomotives and Rail Cars
Trolley/Battery Locomotives Specification (2)

Products:

- Commonality of Components Between Rail Cars & Other Locomotives
- Supply Locomotive
  - 22,700 kg (25 Ton)Trolley/Battery Combination - Battery Powered On Surface and At TBM
  - To Haul 77,300 kg (85 Tons) Load (Including Locomotive) On 3% Gradient
  - Fail Safe Brakes, Parking Brake, & Regenerative Braking
  - Air Compressor For Locomotive & Rail Car Brakes
  - "Deadman" Control

Subsurface Locomotives and Rail Cars
Trolley/Battery Locomotives Specification (3)

- Locomotive Crane
  - Supply Locomotive Equipped With 13,600 kg (15 Ton) Capacity Crane

Execution:

- Supplier to Assemble Rail Cars Prior To Shipment
- Supplier Provide Checkout Documentation & Verification of Final Assembly
- Locomotives To Be Painted Safety Yellow
- Final Inspection & Acceptance By Constructor At Job Site

Subsurface Locomotives and Rail Cars
Trolley/Battery Locomotives Specification (4)

Submittals and Notification:

- **Shop Drawings, Inspection Schedules, & Inspection Reports**
- **Supplier To Notify Contractor of Omissions, Discrepancies, or Requests For Clarification In Writing**

Concrete Invert Segments

- General Arrangement, Invert Segment, Rail Weight and Track Analysis, BABFCCOOO-01717-0200-00137
- Rail Placement Invert Segment A Drawing, BABFCCOOO-01717-2100-40178
- Rail Placement Invert Segment B Drawing, BABFCCOOO-01717-2100-40179

Note: Precast Concrete Specification & Invert Segments Structural Drawings By Subsurface Structural Design Group

Concrete Invert Segments
General Arrangement, Invert Segment, Rail Weight and Track Analysis (1)

Purpose:

- To Determine TBM Tunnel Roadbed General Arrangement (Invert Segment) & Track Configuration

Quality Assurance:

- Roadbed & Rail Determined To Be Not Quality Affecting (TBV)

Study Method:

- Evaluated ESFDR, Technical Literature, & Manufacturer Equipment Specifications
- Discussions With Constructor

Concrete Invert Segments
General Arrangement, Invert Segment, Rail Weight and Track Analysis (2)

Design Inputs:

- Transportation Of People and Supplies Study
- Letters From Construction Subcontractor To Constructor, re Segment Design and Ground Support (Steel Sets)
- TBM Tunnel Precast Concrete Invert Segment - Design Calculations

Criteria:

- Drawn From ESFDR

Assumptions:

- Roadbed and Track Not Considered Quality Affecting Pending Determination of Importance Evaluation

Concrete Invert Segments
General Arrangement, Invert Segment, Rail Weight and Track Analysis (3)

Sources Of Information:

- AREA Manual for Railway Engineering
- Mining Engineers Handbook
- Standard Handbook For Civil Engineers
- Precast-Prestressed Concrete Handbook
- Goodman Equipment Corporation

Concrete Invert Segments
General Arrangement, Invert Segment, Rail Weight and Track Analysis (4)

Design Analysis:

- **Roadbed (Invert Segments) Arrangement**
  - **Limit Flow Of Spilled Hydrocarbons To Rock Surface**
  - **Compatability With Steel Sets (For Ground Control)**
  - **Allowance For TBM Cutter Wear**
  - **Lifting Anchors For Placement Behind TBM**
  - **Accommodate Double Track Arrangement**
  - **Minimize Weight To Facilitate Handling**

Concrete Invert Segments
General Arrangement, Invert Segment, Rail Weight and Track Analysis (5)

Design Analysis (Continued)

- Track Configuration
  - Track Gauge 915 mm (36 in)
  - 85 lb per yard Track Compatible With Heaviest Axle Load & Ease Of Handling
  - Maintain Clearances Within Transportation Envelope
  - Rail Attachments Selected For Concrete Invert Segment
  - Electrical Bonding
  - Special Segment With Blockout For Transferring Pipes Across Tunnel

Concrete Invert Segments
Rail Placement Invert Segment Drawings (1)

Section Includes:

- Rail Placement Invert Segment A Drawing, BABFCCOOO-01717-2100-40178 - Standard Segment
- Rail Placement Invert Segment B Drawing, BABFCCOOO-01717-2100-40179 - Segment With Cutout For Pipes

Purpose:

- To Provide Detailed Drawings For Fabrication Of Concrete Invert Blocks
- Separate Structural Drawing Provide Rebar Details

Concrete Invert Segments
Rail Placement Invert Segment Drawings (2)

Design Input:

- General Arrangement, Invert Segment, Rail Weight and Track Analysis

Instructions to Contractor:

- Constructor Will Have Option To Fabricate Invert Segments On Site
- Quantity To Be Estimated From Tunnel Layout Drawings

Package 2B - Subsurface Design
List of Deliverables (1)

- Muck Storage Study, BABCCOOOO-AA-12-00008-00
- ESF Excavation Study, BABEOOOOO-01717-6700-00008-00
- Rail Haulage Locomotive & Rolling Stock Analysis, BABFCCOOO-01717-0200-00166
- Subsurface Railroad Trackwork Specification, BABFCCOOO-01717-6300-02452
- Trolley System Analysis, BABFCCOOO-01717-0200-00151
- Subsurface Railroad Turnouts Specification, BABFCCOOO-01717-6300-02453
- Trolley/Battery Locomotives Specification, BABFCCOOO-01717-6300-14961

ESF SUBSURFACE DESIGN

90% DESIGN REVIEW

MECHANICAL PRESENTATION

PACKAGE 2B

Name: Donald F. Vanica

Date: January 5, 1994

90% DESIGN REVIEW

MECHANICAL PACKAGE 2B

DESIGN TEAM

D. F. VANICA	794-1996
A. R. KHAN	794-5396
R. S. JURANI	794-7774

90% Design Review

Mechanical - Package 2B

Scope

- Compressed Air System
- Fire Protection System
- Fire Hazards
- Wastewater Collection System
- Ventilation System

Compressed Air Distribution Design Analysis

- Purpose
  - Define Subsurface Compressed Air Requirements
  - Size Distribution System
- Quality Assurance
  - TBV Pending Completion of DIE
- Design Method
  - Conventional Engineering Practice
- Codes & Standards
  - ASME/ANSI B31.3 Chemical Plant and Refinery Piping

Compressed Air Distribution Design Analysis
(continued)

- Design Input
  - ESFDR
  - RSN Design Analysis ST-ME-011
- Regulatory Commitment Criteria
  - 29 CFR PART 1926
  - 30 CFR PART 57, SUBPART L
- Assumptions
  - Compressed Air Delivered to Portal at 125 psig and 70°F

Compressed Air Distribution Design Analysis
(continued)

- Sources of Information
  - TBM Supplier
  - Test Community
  - Subsurface Design
  - Surface Design
- Computer Programs
  - None Used
- Analysis
  - Flow Rate - 3,000 scfm Demand - 2,500 scfm Design

Compressed Air Distribution Design Analysis
(continued)

- Analysis (continued)
  - Equivalent Pipe Length - 28,000 ft
  - Pipe Sizes/Friction Losses

    6 in/0.105 psi/100 ft

    8 in/0.026 psi/100 ft
- Conclusions
  - 8 in Schedule 10 Pipe Selected
  - 118 psig available at most remote location

Fire Protection Design Analysis

- Purpose
  - Evaluate & Select Fire Protection System
  - Size System Components
- Quality Assurance
  - TBV Pending Completion of DIE
- Method
  - Conventional Engineering Practice
- Codes & Standards
  - DOE Orders
  - NFPA Standards

Fire Protection Design Analysis
(continued)

- Design Input
  - ESFDR
- Regulatory Commitment Criteria
  - 30 CFR PART 57, SUBPART C
  - 29 CFR PART 1910, SUBPART L
  - 29 CFR PART 1926
  - CCR, Title 8, Div 1, Chapter 4, Subchapter 20, Article 4
- Assumptions
  - Single Heading Construction
  - Group 1 Ordinary Hazard Occupancy

Fire Protection Design Analysis
(continued)

- Assumptions (continued)
  - Classified as Underground Facility per 10 CFR 60
  - Fire Protection Requirements Specified by DOE Order 5480-7A
- Sources of Information
  - Subsurface Fire Hazards Analysis
  - TBM Supplier

Fire Protection Design Analysis
(continued)

- Sources of Information (continued)
  - Testing Community
  - Crane Technical Paper
  - Cameron Hydraulic Data
- Computer Programs
  - None Used

Fire Protection Water Requirements, GPM

Code/ System	DOE 6430.1A	NFPA 13		NFPA 14	NFPA 123	ESF Design
		Hydraulic Calc	Pipe Schedule			
Sprinklers	NFPA 13	225	850	NFPA 13	NFPA 13	225
Fire Hose Allowance	500	250		100	150	150
Subtotal	725	475	850	325	375	375
Process	100	100	100	100	100	100
Total	825	575	950	425	475	475

Fire Protection Design Analysis
(continued)

- Analysis
  - Fire Protection Methods
  - Water Supply Requirements
  - Pipe Sizing
  - Pressure
- Conclusions
  - 375 gpm Water for Fire Suppression
  - 100 gpm Water for Construction

Fire Protection Design Analysis
(continued)

- Conclusions (continued)
  - 65 psig Minimum Pressure
  - Motor Operated Isolation Valves at 270 m (900 ft) Intervals
  - Fire Hose Stations at 90 m (300 ft) Intervals
  - Wet Pipe Sprinklers at 5 Locations
  - Boost Pump Required

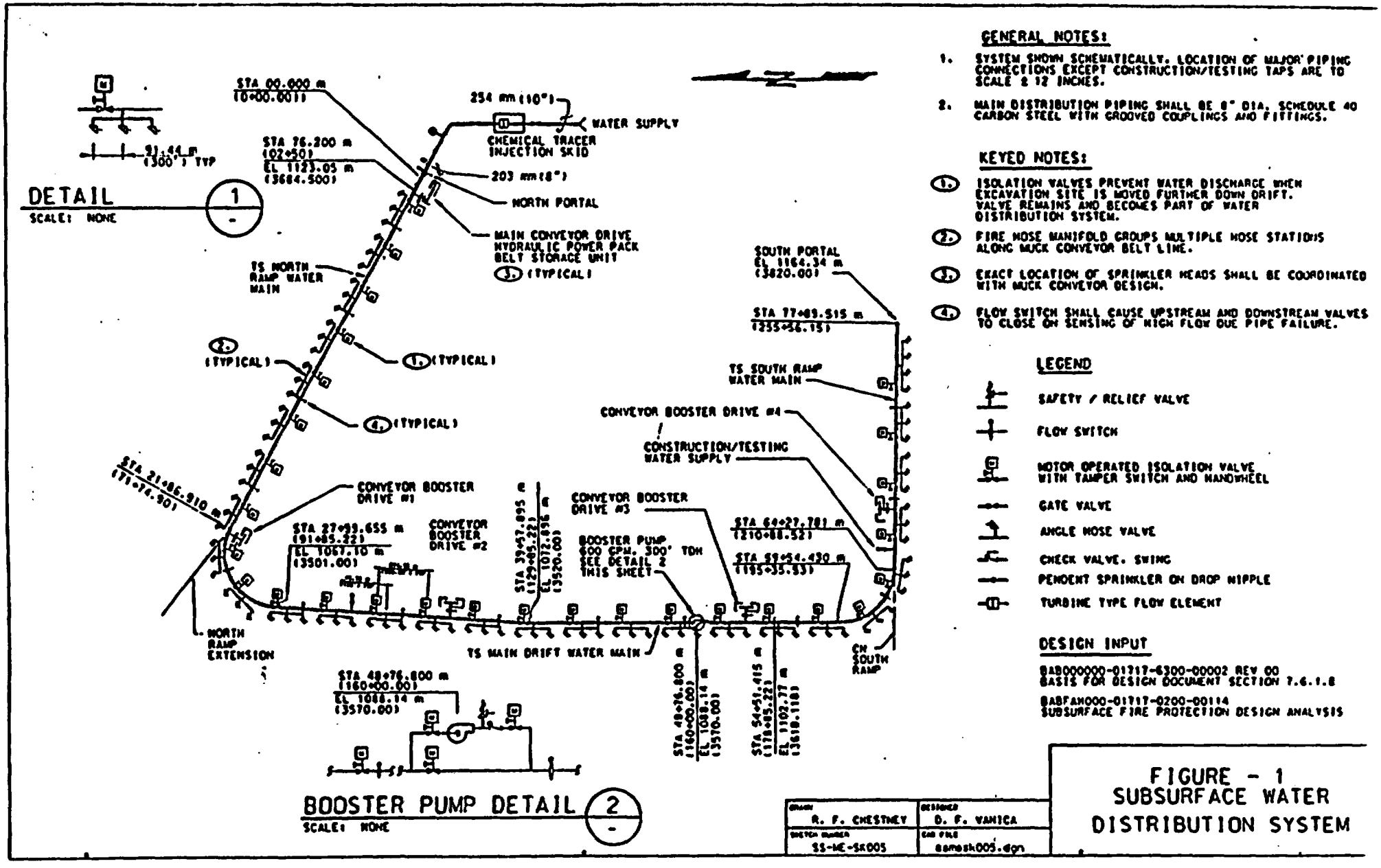
DETAIL 1
SCALE: NONE
91.44 m (300') TYP
STA 00.000 m (0+00.00)
STA 76.200 m (02+50)
EL 1123.05 m (3684.50)
254 mm (10")
WATER SUPPLY
CHEMICAL TRACER INJECTION SKID
203 mm (8")
NORTH PORTAL
MAIN CONVEYOR DRIVE HYDRAULIC POWER PACK BELT STORAGE UNIT
3. (TYPICAL)
TS NORTH RAMP WATER MAIN
2. (TYPICAL)
1. (TYPICAL)
4. (TYPICAL)
STA 21+86.910 m (71+74.90)
CONVEYOR BOOSTER DRIVE #1
STA 27+99.655 m (91+85.22)
EL 1067.10 m (3501.00)
CONVEYOR BOOSTER DRIVE #2
STA 39+57.895 m (129+85.22)
EL 1072.89 m (3520.00)
CONVEYOR BOOSTER DRIVE #3
BOOSTER PUMP 600 GPM, 300' TDH SEE DETAIL 2 THIS SHEET
STA 64+27.781 m (210+88.52)
STA 69+54.430 m (185+35.53)
SOUTH PORTAL EL 1164.34 m (3820.00)
STA 77+89.515 m (255+56.15)
TS SOUTH RAMP WATER MAIN
CONVEYOR BOOSTER DRIVE #4
CONSTRUCTION/TESTING WATER SUPPLY
NORTH RAMP EXTENSION
TS MAIN DRIFT WATER MAIN
STA 48+76.800 m (160+00.00)
EL 1088.14 m (3570.00)
STA 54+51.415 m (178+85.22)
EL 1102.77 m (3618.11)
CN SOUTH RAMP
STA 48+76.800 m (160+00.00)
EL 1088.14 m (3570.00)
BOOSTER PUMP DETAIL 2
SCALE: NONE
GENERAL NOTES:
1. SYSTEM SHOWN SCHEMATICALLY. LOCATION OF MAJOR PIPING CONNECTIONS EXCEPT CONSTRUCTION/TESTING TAPS ARE TO SCALE ± 12 INCHES.
2. MAIN DISTRIBUTION PIPING SHALL BE 8" DIA. SCHEDULE 40 CARBON STEEL WITH GROOVED COUPLINGS AND FITTINGS.
KEYED NOTES:
1. ISOLATION VALVES PREVENT WATER DISCHARGE WHEN EXCAVATION SITE IS MOVED FURTHER DOWN DRIFT. VALVE REMAINS AND BECOMES PART OF WATER DISTRIBUTION SYSTEM.
2. FIRE HOSE MANIFOLD GROUPS MULTIPLE HOSE STATIONS ALONG MUCK CONVEYOR BELT LINE.
3. EXACT LOCATION OF SPRINKLER HEADS SHALL BE COORDINATED WITH MUCK CONVEYOR DESIGN.
4. FLOW SWITCH SHALL CAUSE UPSTREAM AND DOWNSTREAM VALVES TO CLOSE ON SENSING OF HIGH FLOW DUE PIPE FAILURE.
LEGEND
SAFETY / RELIEF VALVE
FLOW SWITCH
MOTOR OPERATED ISOLATION VALVE WITH TAMPER SWITCH AND HANDWHEEL
GATE VALVE
ANGLE HOSE VALVE
CHECK VALVE, SWING
PENDENT SPRINKLER ON DROP NIPPLE
TURBINE TYPE FLOW ELEMENT
DESIGN INPUT
BABOOOOOO-01717-6300-00002 REV 00
BASIS FOR DESIGN DOCUMENT SECTION 7.6.1.8
BABFAH000-01717-0200-00114
SUBSURFACE FIRE PROTECTION DESIGN ANALYSIS
R. F. CHESTNEY
D. F. VANICA
SS-ME-SK005
baMesk005.dgn
FIGURE - 1
SUBSURFACE WATER
DISTRIBUTION SYSTEM

Subsurface Fire Hazards Analysis

- Purpose
  - Evaluate Risk from Fire
- Quality Assurance
  - TBV Pending Completion of DIE
- Design Method
  - Review Known & Potential Tunneling Activities
  - Apply Existing Fire Protection Codes, Standards & Regulations

Subsurface Fire Hazards Analysis
(continued)

- Codes & Standards
  - DOE Orders
  - NFPA Standards
- Design Input
  - Fire Protection Design Analysis
- Regulatory Commitment Criteria
  - 29 CFR PART 1910, SUBPART L
  - 29 CFR PART 1926
  - 30 CFR PART 57, SUBPART C
  - CCR Title 8, Div 1, Chapter 4, Subchapter 20, Article 4

Subsurface Fire Hazards Analysis
(continued)

- Assumptions
  - None Used
- Sources of Information
  - ESFDR
  - Reference Information Base
- Computer Programs
  - None Used

Subsurface Fire Hazards Analysis
(continued)

- Analysis
  - Construction
    - Noncombustible Materials
  - Fire Protection
    - Fire Hose Stations
    - Limited Sprinkler System
    - Portable Fire Extinguishers
    - Alarms

Subsurface Fire Hazards Analysis
(continued)

- Analysis (continued)
  - Fire Protection (continued)
    - Detectors
    - Fire Resistant Equipment
    - Refuge Areas
    - Regulations
  - Potential Hazards
    - Fire Sources
      - Hydraulic Fluids

Subsurface Fire Hazards Analysis
(continued)

- Analysis (continued)
  - Potential Hazards (continued)
    - Fire Sources (continued)
      - Grease & Oils
      - Diesel Fuel
      - Tires
      - Water & Air Hoses
      - Electric Insulation

Subsurface Fire Hazards Analysis
(continued)

- Analysis (continued)
  - Potential Hazards (continued)
    - Ignition Sources
      - Engine Exhaust
      - Malfunctioning Brakes, Bearings & Gears
      - Faulty Electrical Equipment
      - Welding & Cutting Operations

Subsurface Fire Hazards Analysis
(continued)

- Conclusions
  - Potential Hazards from Fire Reduced
    - No Hazard to Human Life
    - No Release of Hazardous Materials
    - No Delay to Program Objectives

Subsurface Wastewater Analysis

- Purpose
  - Establish Requirements for Dewatering System
  - Estimate Quantities of Wastewater
  - Develop Design Concept
- Quality Assurance
  - TBV Pending Completion of DIE
- Design Method
  - Conventional Engineering Practice
- Codes & Standards
  - ASME/ANSI B31.3 Chemical Plant & Refinery Piping

Subsurface Wastewater Analysis
(continued)

- Design Input
  - ESFDR
- Regulatory Commitment Criteria
  - 10 CFR PART 60
  - 30 CFR PART 57
  - 29 CFR PART 1926
  - 29 CFR PART 1910
  - CCR Title 8, Div 1, Chapter 4, Subchapter 20, Article 4

Subsurface Wastewater Analysis
(continued)

- Assumptions
  - Sources of Wastewater

    Construction

    Fire Protection

    Water Main Failure

    Ground Water

    8 in Water Main Size
  - 15 sec Isolation Valve Closure
  - Temporary System Capable of Advancing with Excavation Face

Subsurface Wastewater Analysis
(continued)

- Sources of Information
  - Reference Information Base
  - Subsurface Fire Protection Design Analysis
  - Cameron Hydraulic Data
  - Crane Technical Paper
- Computer Programs
  - None Used

Subsurface Wastewater Analysis
(continued)

- Analysis
  - Estimated Wastewater Quantities

    Construction - 50 gpm

    Fire Protection - 4,500 gal

    Water Main Failure - 5,000 gal

    Ground Water - Unknown
  - Gravity Flow to Tunnel Low Point
  - Portable Sump During Construction

Subsurface Wastewater Analysis
(continued)

- Conclusions
  - Two Systems Required
  - Skid Mounted 1,000 gal Temporary System
  - 5,000 gal Permanent System in Alcove
  - Compartmentized Sumps

Subsurface Ventilation Analysis

- Purpose
  - Establish Airflow Requirements
  - Equipment Arrangement
  - Size Ductwork
  - Determine Fan Performance
  - Evaluate Operation at Reduced Flow
  - Evaluate Heating & Refrigeration Requirements
- Quality Assurance
  - TBV Pending Completion of DIE

Subsurface Ventilation Analysis
(continued)

- Design Method
  - Analytical Method Using Computer Software
- Codes & Standards
  - 10 CFR PART 60
  - 30 CFR PART 57
  - 29 CFR PART 1910
  - 29 CFR PART 57
  - DOE Order 5483.1A
  - DOE Order 5480.4

Subsurface Ventilation Analysis
(continued)

- Codes & Standards (continued)
  - DOE Order 5480
  - Bureau of Reclamation
  - State of Nevada
  - ACG1H (Industrial Ventilation)
  - NFPA
  - CCR Title 8
  - SMACNA

Subsurface Ventilation Analysis
(continued)

- Codes & Standards (continued)
  - ASHRAE
  - ESFDR
  - RIB
- Design Input
  - ESFDR

    Environmental Controls

    Maintainability

    15 YR Design Life

    Safety Features

Subsurface Ventilation Analysis
(continued)

- Design Input (continued)
  - ESFDR (continued)
    - Noise Level
    - Minimize Leakage
    - Growth Capability
    - Monitoring & Warning
    - Standby Power
    - Uncertainty Allowance

Subsurface Ventilation Analysis
(continued)

- Regulatory Commitment Criteria
  - 29 CFR PART1926
  - 30 CFR PART 57
  - State of Nevada, Part 1, Title 46, Chapter 512 NRS
  - Dept. of Interior, Bureau of Reclamation
- Assumptions
  - One Heading
  - Duct Friction Factor = 15×10^{-10}
  - Drift Friction Factor = 75×10^{-10}

Subsurface Ventilation Analysis
(continued)

- Assumptions (continued)
  - 10% Length Allowance for Duct Joints & Misalignment
  - Must Fit Within Transportation Envelope
- Sources of Information
  - Mine Ventilation and Air Conditioning
  - AMCA Standard 210
  - SME Mining Engineering Handbook
  - Proceedings of the 6th U.S. Mine Ventilation Symposium
  - Joy Axivane Fan Catalog

Subsurface Ventilation Analysis
(continued)

- Sources of Information (continued)
  - Industrial Ventilation
  - A Manual of Ventilation Design Practices
  - Raytheon Services Nevada Various Title I Reports
- Computer Programs
  - VNETPC, Version 3.1, Ventilation Simulation with Gas Distribution Was Used

Subsurface Ventilation Analysis
(continued)

- Analysis
  - Used Vaneaxial Fans in Series Operating in Exhaust Mode
  - 150 fpm Maximum Air Velocity in Ramps
  - 217 fpm Net Air Velocity Based on 25% Leakage and 20% Uncertainty Allowance
  - Design Airflow Rate of 106,800 CFM

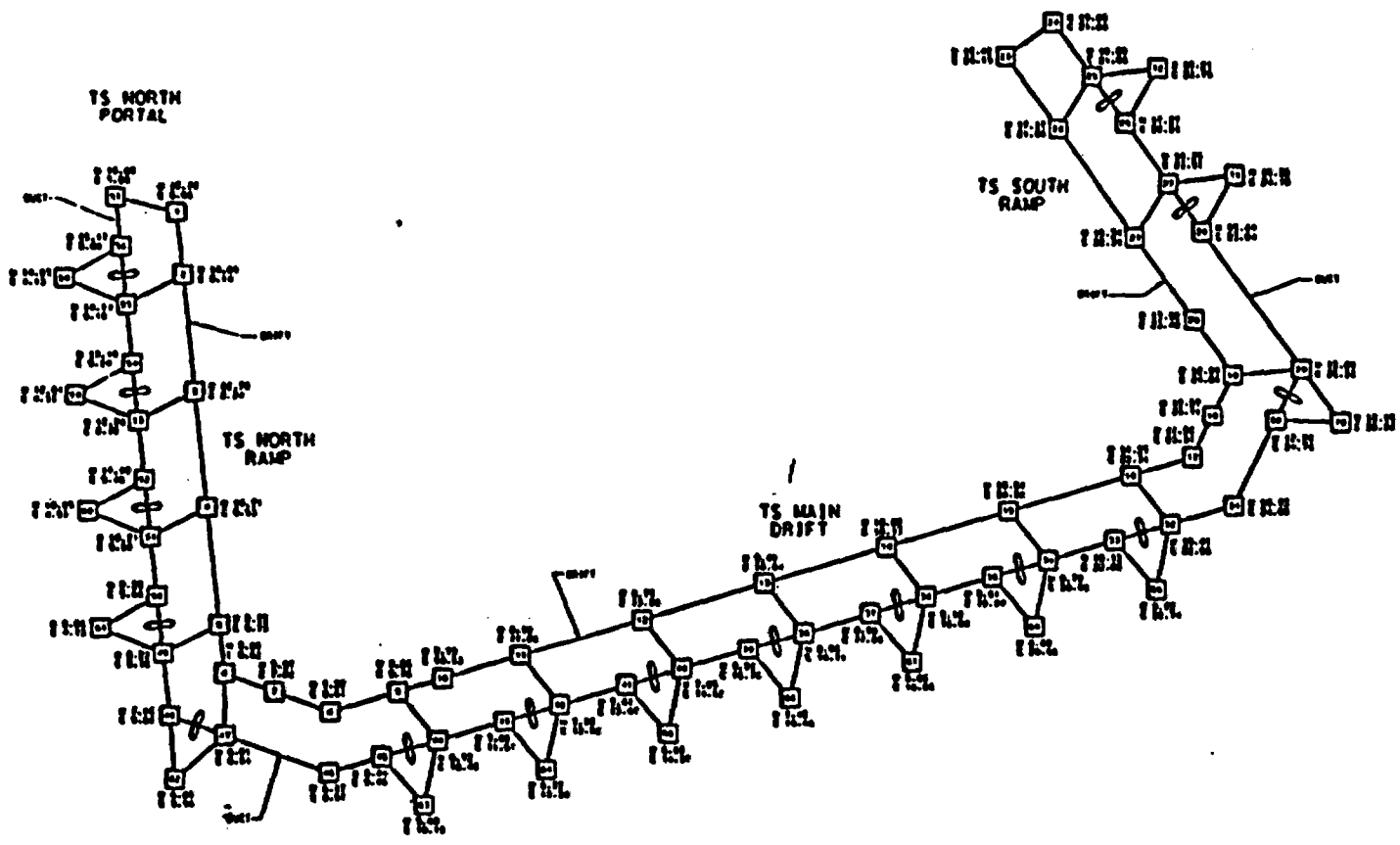

CONSTRUCTION PHASE

DRIFT OVERALL
TO STATION 255+50

WORK WITH:

SS-ME-SK008 TO STA 17+00
SS-ME-SK009 TO STA 81+00
SS-ME-SK010 TO STA 136+00

SUBSURFACE VENTILATION
TS AIR FLOW SCHEMATIC
MODEL FOR VNETPC

SS-ME-SK007

Subsurface Ventilation Analysis
(continued)

- Analysis (continued)
  - Evaluated:

    Air Duct Size

    Fan Speed & Spacing

    Ventilation Capabilities as Construction Advances

    Reduced Air Flow Requirements

    Choked Flow

    Mechanical Refrigeration

    Ramp Heaters

Subsurface Ventilation Analysis
(continued)

- Conclusions
  - Single Exhaust Duct Supports ESF Construction
  - Design Air Velocity of 217 fpm Including Leakage & Uncertainty Allowance
  - Design Airflow Rate of 110,000 cfm at 11.0 in W.G.
  - Two Stage Vaneaxial Fan with Adjustable Pitch Blades

    15 Fans Required at 518 m (1,700 ft) spacing

Subsurface Ventilation Analysis
(continued)

- Conclusions (continued)
  - 66 in Diameter Rigid Duct
  - Pressure Release to Avoid Excessive Negative Pressure
  - Mechanical Refrigeration Not Required
  - Ramp Air Heaters Not Required

Ventilation Fan Specification

- Includes Design, Manufacture and Delivery of 15 Fan Assemblies
- Quality Assurance is TBV Pending Completion of DIE
- Products
  - Vaneaxial Fan
  - Inlet & Outlet Silencers
  - Inlet & Outlet Cones
  - Inlet Screen
  - Inlet Adapter with Access Door/Drop Box
  - Outlet Adapter with Pressure Release Door
  - Flexible Connectors

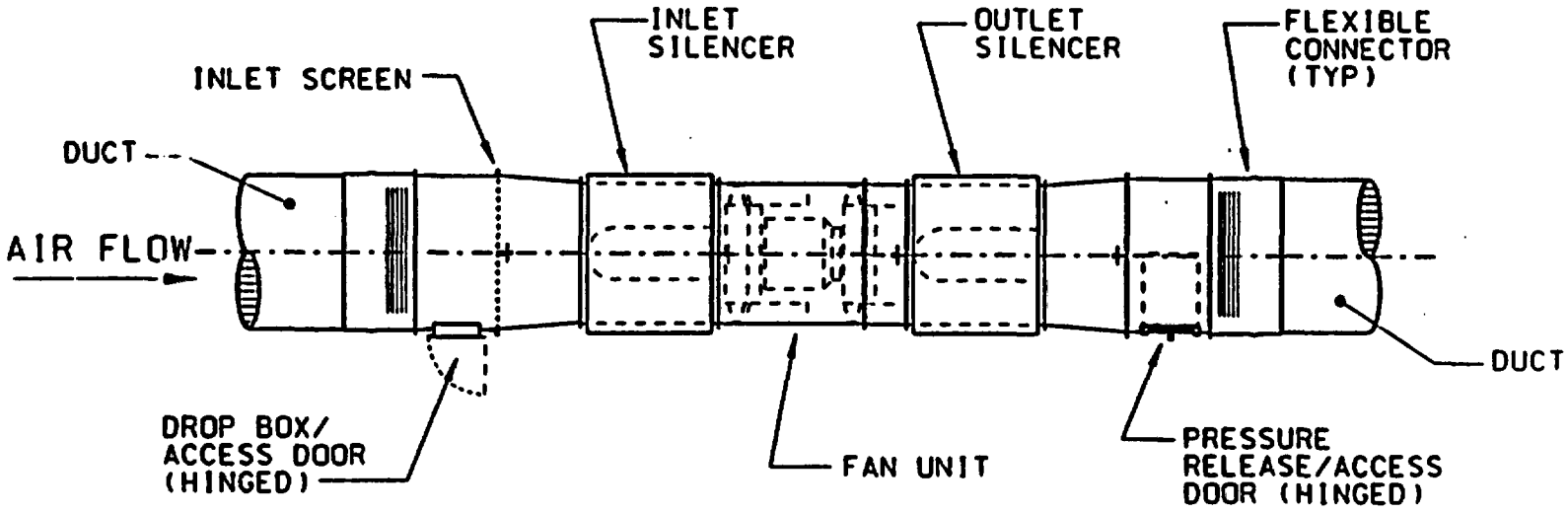

TYPICAL FAN ASSEMBLY
SHOWN IN ELEVATION VIEW

Civilian Radioactive Waste Management System
MANAGEMENT & OPERATING CONTRACTOR

ESF
SUBSURFACE
DESIGN

Ventilation Fan Specification
(continued)

- Products (continued)
  - Motor Controller
  - Reversible Starter
  - Vibration/Temperature Monitoring
- Execution
  - In-Plant Performance Tests
  - Assist in Installation & Startup

Ventilation Fan Specification
(continued)

- Submittals & Notification
  - Shop Drawings
  - Performance Data
  - Proof of Compliance
  - O&M Manuals

Ventilation Duct and Fittings

- Includes Design and Fabrication
- Quality Assurance is TBV Pending Completion of DIE
- Products
  - 18 GA 66 in. Dia x 6.1 m (20 ft) Long Duct Segments
  - Mechanical Clamp Type Couplings
  - Fittings

Ventilation Duct Specification

- Execution
  - Fabrication to be at NTS
  - Dimensional/Visual Inspection
  - Random Leakage/Structural Testing
  - Installation by Site Contractor
- Submittals
  - Shop Drawings

ESF SUBSURFACE DESIGN

90% DESIGN REVIEW

ELECTRICAL/INSTRUMENTATION PRESENTATION

PACKAGE 2B

Name: W. J. Reed

Date: January 5, 199

90% DESIGN REVIEW

ELECTRICAL/INSTRUMENTATION - PACKAGE 2B

DESIGN TEAM

BILL REED		794-7371
EDGAR EBERHARD		794-7083
LES FERNANDEZ		794-5354
DENNIS MARKMAN	(208)	386-5579

90% Design Review

Electrical/Instrumentation - Package 2B

Scope of Package

- Switchgear (Package 2A)
  - Electrical Subsurface Short Circuit Analysis
  - Electrical Subsurface Voltage Drop Analysis
  - Electrical Subsurface Load Analysis
  - Single Line Diagrams (Reference Only)
- Metal-Clad Cable Code Review Analysis
- Electrical Subsurface Grounding Analysis
- Subsurface Electric Trolley System Specification

90% Design Review
Electrical/Instrumentation - Package 2B
Scope of Package
(continued)

- Subsurface Monitoring and Warning System
  - Subsurface Monitoring and Warning System Specification
  - P&ID Drawings
- Control System
  - Control System Analysis
  - Integrated Control System Specification
  - Drawings
    - Logic Diagram
    - Block Diagram
    - P&ID Drawings

Switchgear (Package 2A)

Electrical Subsurface Short Circuit Analysis

- Purpose
  - Determine Maximum Short Circuit Currents
- Quality Assurance
  - TBV Pending Completion of DIE
- Methods
  - Analytical Using Conventional Engineering Practices

Switchgear (Package 2A)
(continued)

Electrical Subsurface Short Circuit Analysis (continued)

- Codes & Standards
  - Code of Federal Regulations (CFR)
  - American National Standards Institute, Inc. (ANSI)
  - ANSI/Institute of Electrical and Electronic Engineers (IEEE)
  - ANSI/National Fire Protection Association (NFPA)
  - Underwriter's Laboratory, Inc. (UL)
  - California Code of Regulations (CCR)
  - U.S. Department of Energy (DOE)
  - Industry Standard Reference

Switchgear (Package 2A)
(continued)

Electrical Subsurface Short Circuit Analysis (continued)

- Design Inputs
  - Project Single Line Diagrams
  - Nevada Test Site (NTS)
  - Raytheon Services Nevada (RSN) Design Analysis ST-EL-200 North Portal Short Circuit Analysis
  - YMP/CM-0019-ESF-Design Requirements (ESFDR)
- Criteria
  - DOE 6430-1A
  - DOE ESFDR/CM-0019

Switchgear (Package 2A)
(continued)

Electrical Subsurface Short Circuit Analysis (continued)

- Assumptions
  - Installation of a second 138/12.47 kV Transformer
  - All loads operating at the same time
  - Primary transformer impedance assumed to be nine percent, and X/R ratio is assumed 20
  - Demand factor for the TBM is assumed 100 percent
  - Other assumptions as listed

Switchgear (Package 2A)
(continued)

Electrical Subsurface Short Circuit Analysis (continued)

- Sources of Information
  - DOE 6430.1A
  - RSN Design Analysis ST-EL-200
  - YMP/CM-0019 - ESF - Design Requirements
  - YMP/CM-0016 - ESF - Technical Baseline
  - RSN BFD-001, Basis for Design
  - M&O Basis for Design (BFD)

Switchgear (Package 2A)
(continued)

Electrical Subsurface Short Circuit Analysis (continued)

- Sources of Information (continued)
  - Single Line Diagrams
  - Westinghouse Electric Co. - Electric Transmission and Distribution Ref. Book
  - Other listed sources
- Computer Programs
  - None

Switchgear (Package 2A)
(continued)

Electrical Subsurface Short Circuit Analysis (continued)

- Body
  - Calculations as indicated
- Conclusions
  - 500 MVA rating for 12.47 switchgear
  - Depending on location, 480 V circuit breaker shall have 42000 or 50000 AIC

Switchgear (Package 2A)
(continued)

Electrical Subsurface Voltage Drop Analysis

- Purpose
  - Determine the worst case voltage drop for the Subsurface Electrical Distribution System
- Quality Assurance
  - TBV Pending Completion of DIE
- Methods
  - Analytical Using Conventional Engineering Practices

Switchgear (Package 2A)
(continued)

Electrical Subsurface Voltage Drop Analysis (continued)

- Codes & Standards
  - Code of Federal Regulations (CFR)
  - American National Standards Institute, Inc. (ANSI)
  - California Administrative Code (CAC)
  - California Code of Regulations (CCR)
  - California Electrical Code (CEC)

Switchgear (Package 2A)
(continued)

Electrical Subsurface Voltage Drop Analysis (continued)

- Codes & Standards (continued)
  - American National Standards Institute, Inc./Institute of Electrical and Electronics Engineers (ANSI/IEEE)
  - National Fire Protection Association (NFPA)
  - U.S. Department of Energy (DOE)
  - Industry Standard Reference

Switchgear (Package 2A)
(continued)

Electrical Subsurface Voltage Drop Analysis (continued)

- Design Inputs
  - Project Single Line Diagrams
  - Nevada Test Site (NTS)
  - Raytheon Services Nevada (RSN) Design Analysis ST-EL-200 North Portal Short Circuit Analysis
  - YMP/CM-0019-ESF-Design Requirements (ESFDR)
- Criteria
  - DOE 6430-1A
  - DOE ESFDR/CM-0019

Switchgear (Package 2A)
(continued)

Electrical Subsurface Voltage Drop Analysis (continued)

- Assumptions
  - Installation of a second 138/12.47 kV Transformer
  - All loads operating at the same time
  - Primary transformer impedance assumed to be nine percent, and X/R ratio is assumed 20
  - Demand factor for the TBM is assumed 100 percent
  - Other assumptions as listed

Switchgear (Package 2A)
(continued)

Electrical Subsurface Voltage Drop Analysis (continued)

- Sources of Information
  - DOE 6430.1A
  - YMP/CM-0019 - ESF - Design Requirements
  - YMP/CM-0016 - ESF - Technical Baseline
  - YMP/Raytheon Services Nevada (RSN) RSN-BFD-001, Basis for Design
  - RSN Analysis ST-EL-202
  - RSN Analysis ST-EL-200

Switchgear (Package 2A)
(continued)

Electrical Subsurface Voltage Drop Analysis (continued)

- Sources of Information (continued)
  - M&O Basis for Design (BFD)
  - Single Line Diagrams
  - Westinghouse Electric Co. - Electric Transmission and Distribution Ref. Book
  - Other listed sources
- Computer Programs
  - None

Switchgear (Package 2A)
(continued)

Electrical Subsurface Voltage Drop Analysis (continued)

- Body
  - Calculations as indicated
- Conclusions
  - Evaluated feeder cable sizes will not exceed 3 percent
  - Power Factor correction is required to maintain 85% or better power factor

Switchgear (Package 2A)
(continued)

Electrical Subsurface Load Analysis

- Purpose
  - To provide load data and supporting documentation for the electrical design and equipment selection for the subsurface ESF
- Quality Assurance
  - TBV Pending Completion of DIE

Switchgear (Package 2A)
(continued)

Electrical Subsurface Load Analysis (continued)

- Methods
  - Analytical Using Conventional Engineering Practices
  - Vendor data for system and components
  - YMP/CM-0019 ESF-Design Requirements (ESFDR)
  - Raytheon Services Nevada (RSN) Design Analysis ST-EL-207 North Portal Bus Loading Analysis
  - Others as Listed

Switchgear (Package 2A)
(continued)

Electrical Subsurface Load Analysis (continued)

- Codes & Standards
  - American National Standards Institute, Inc./Institute of Electrical and Electronics Engineers (ANSI/IEEE)
  - American National Standards Institute/National Fire Protection Association (ANSI/NFPA)
  - U.S. Department of Energy (DOE)
  - California Administrative Code (CAC)
  - California Electrical Code (CEC)
  - California Code of Regulations (CCR)

Switchgear (Package 2A)
(continued)

Electrical Subsurface Load Analysis (continued)

- Design Inputs
  - Project Single Line Diagrams
  - YMP/CM-0019-ESF-Design Requirements (ESFDR)
- Criteria
  - DOE 6430-1A
  - DOE ESFDR/CM-0019

Switchgear (Package 2A)
(continued)

Electrical Subsurface Load Analysis (continued)

- Assumptions
  - Standby Loads

    60% ventilation fans

    100% lighting distribution

    100% electric service distribution

    100% electric control power distribution
  - Loads are considered for Topopah Spring (TS) tunnel from north to south portal, and forecasted for Calico Hills (CH) tunnel and Main Test Area
  - Other Assumptions as listed

Switchgear (Package 2A)
(continued)

Electrical Subsurface Load Analysis (continued)

- Sources of Information
  - DOE 6430.1A
  - YMP/CM-0019 - ESF - Design Requirements
  - YMP/CM-0016 - ESF - Technical Baseline
  - Raytheon Services Nevada (RSN) RSN-BFD-001, Basis for Design
  - M&O ESF Basis for Design (BFD)
  - Single Line Diagrams
  - Other Reference Material Listed

Switchgear (Package 2A)
(continued)

Electrical Subsurface Load Analysis (continued)

- Computer Applications
  - Lotus 1-2-3 for load listing only
- Body
  - Calculations as indicated

Switchgear (Package 2A)
(continued)

Electrical Subsurface Load Analysis (continued)

- Conclusions
  - Standby diesel generators shall feed a standby load of about 12 MVA
  - Projected Subsurface loads during operation and construction is 30 MVA

    Note: This analysis does not take into account scheduling of construction activities
  - Other Conclusions as listed

Switchgear (Package 2A)
(continued)

Single Line Diagrams (Reference Only)

- 44000 - Subsurface Main & North Portal Switchgear Single Line Diagram
- 44011 - Subsurface TS Tunnel Substations Single Line Diagram Sht 1
- 44012 - Subsurface TS Tunnel Substations Single Line Diagram Sht 2
- 44013 - Subsurface TS Tunnel Substations Single Line Diagram Sht 3
- 44014 - Subsurface TS Tunnel Substations Single Line Diagram Sht 4
- 44212 - Subsurface Electrical Notes & Legend Single Line Diagram

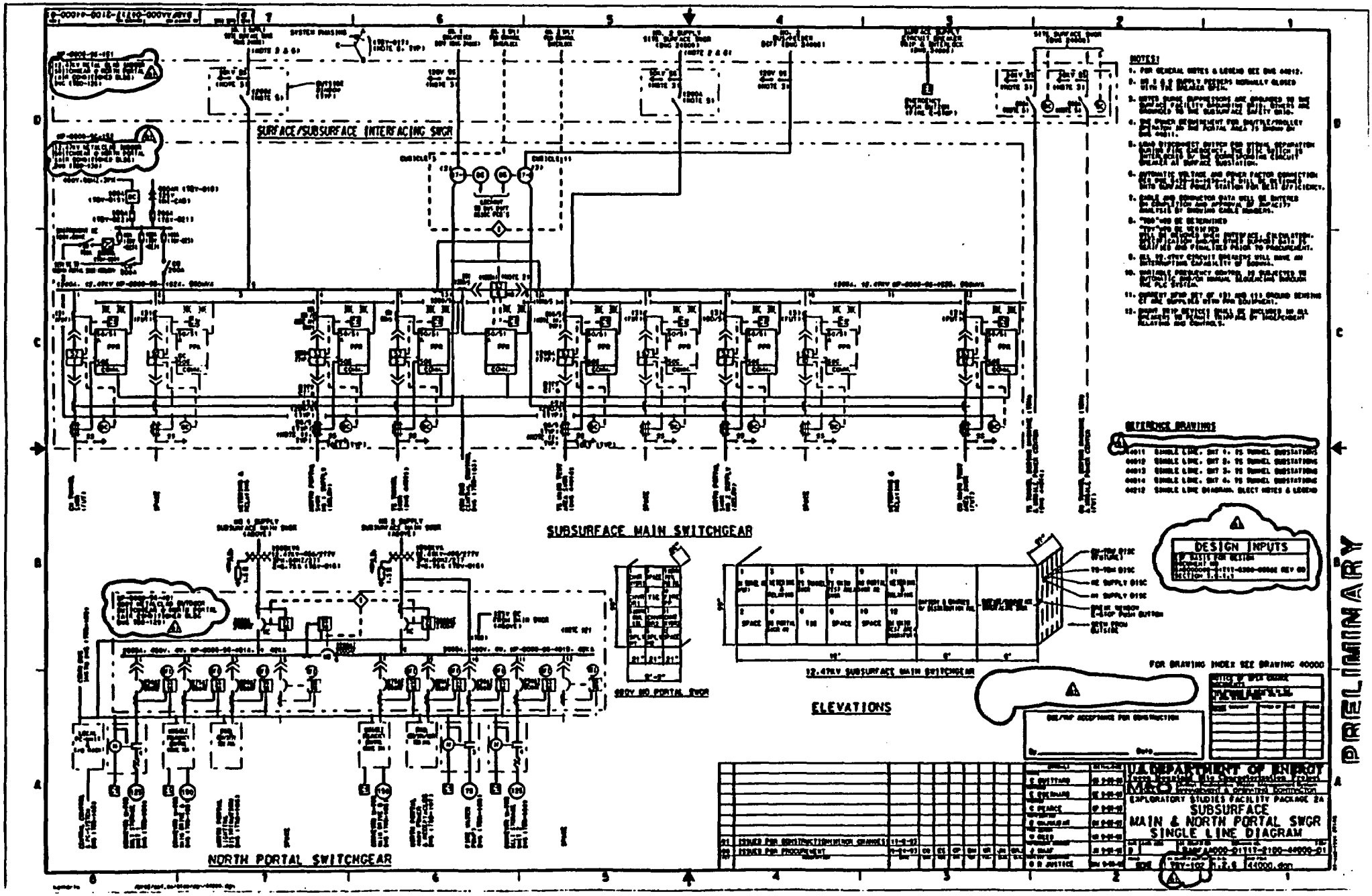
SURFACE/SUBSURFACE INTERFACING SWGR
SUBSURFACE MAIN SWITCHGEAR
NORTH PORTAL SWITCHGEAR
ELEVATIONS
12.47kV SUBSURFACE MAIN SWITCHGEAR
480V NO PORTAL SWGR
NOTES:
REFERENCE DRAWINGS
DESIGN INPUTS
FOR DRAWING INDEX SEE DRAWING 40000
U.S. DEPARTMENT OF ENERGY
EXPLORATORY STUDIES FACILITY PACKAGE 2A
SUBSURFACE
MAIN & NORTH PORTAL SWGR
SINGLE LINE DIAGRAM
PRELIMINARY

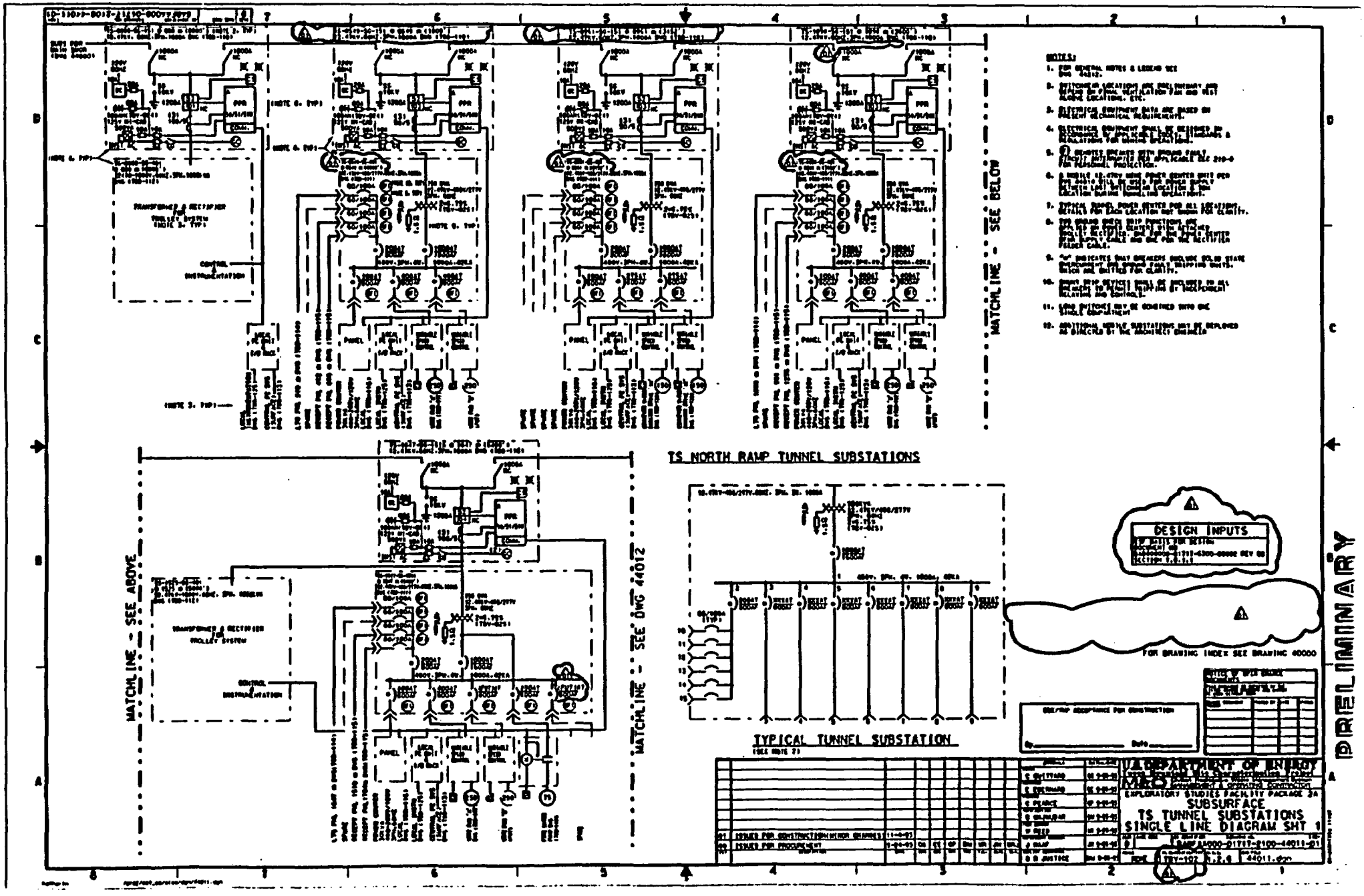
TS NORTH RAMP TUNNEL SUBSTATIONS
TYPICAL TUNNEL SUBSTATION
MATCHLINE - SEE ABOVE
MATCHLINE - SEE DWG 44012
MATCHLINE - SEE BELOW
DESIGN INPUTS
FOR DRAWING INDEX SEE DRAWING 40000
PRELIMINARY
U.S. DEPARTMENT OF ENERGY
MACTEC
EXPLORATORY STUDIES FACILITY PACKAGE 3A
SUBSURFACE
TS TUNNEL SUBSTATIONS
SINGLE LINE DIAGRAM SHT 1
ISSUED FOR CONSTRUCTION
ISSUED FOR PROCUREMENT

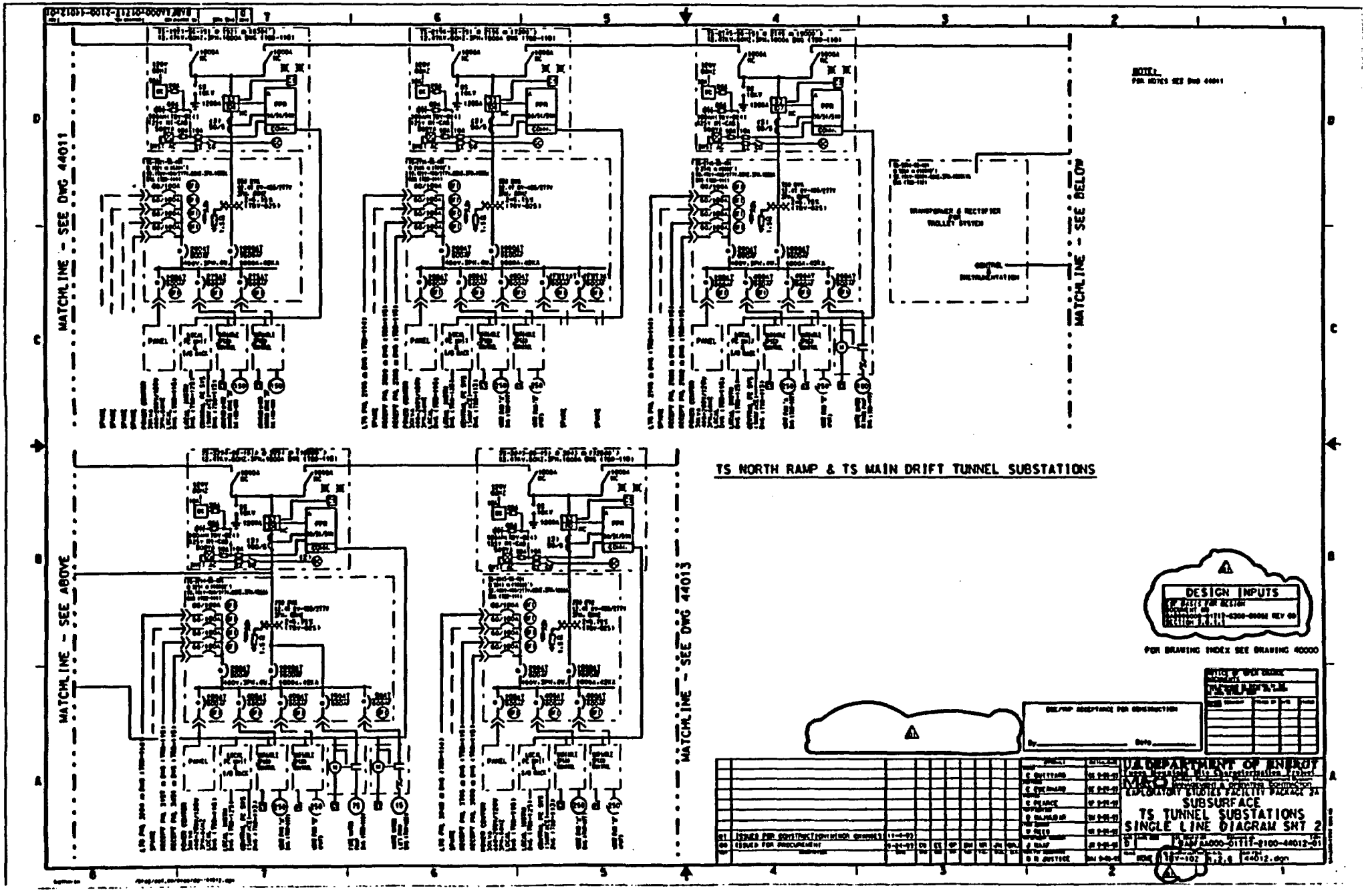
MATCHLINE - SEE DWG 44011
MATCHLINE - SEE BELOW
MATCHLINE - SEE ABOVE
MATCHLINE - SEE DWG 44013
TS NORTH RAMP & TS MAIN DRIFT TUNNEL SUBSTATIONS
DESIGN INPUTS
FOR DRAWING INDEX SEE DRAWING 40000
U.S. DEPARTMENT OF ENERGY
EXPLORATORY STUDIES FACILITY PACKAGE 2A
SUBSURFACE
TS TUNNEL SUBSTATIONS
SINGLE LINE DIAGRAM SHT 2

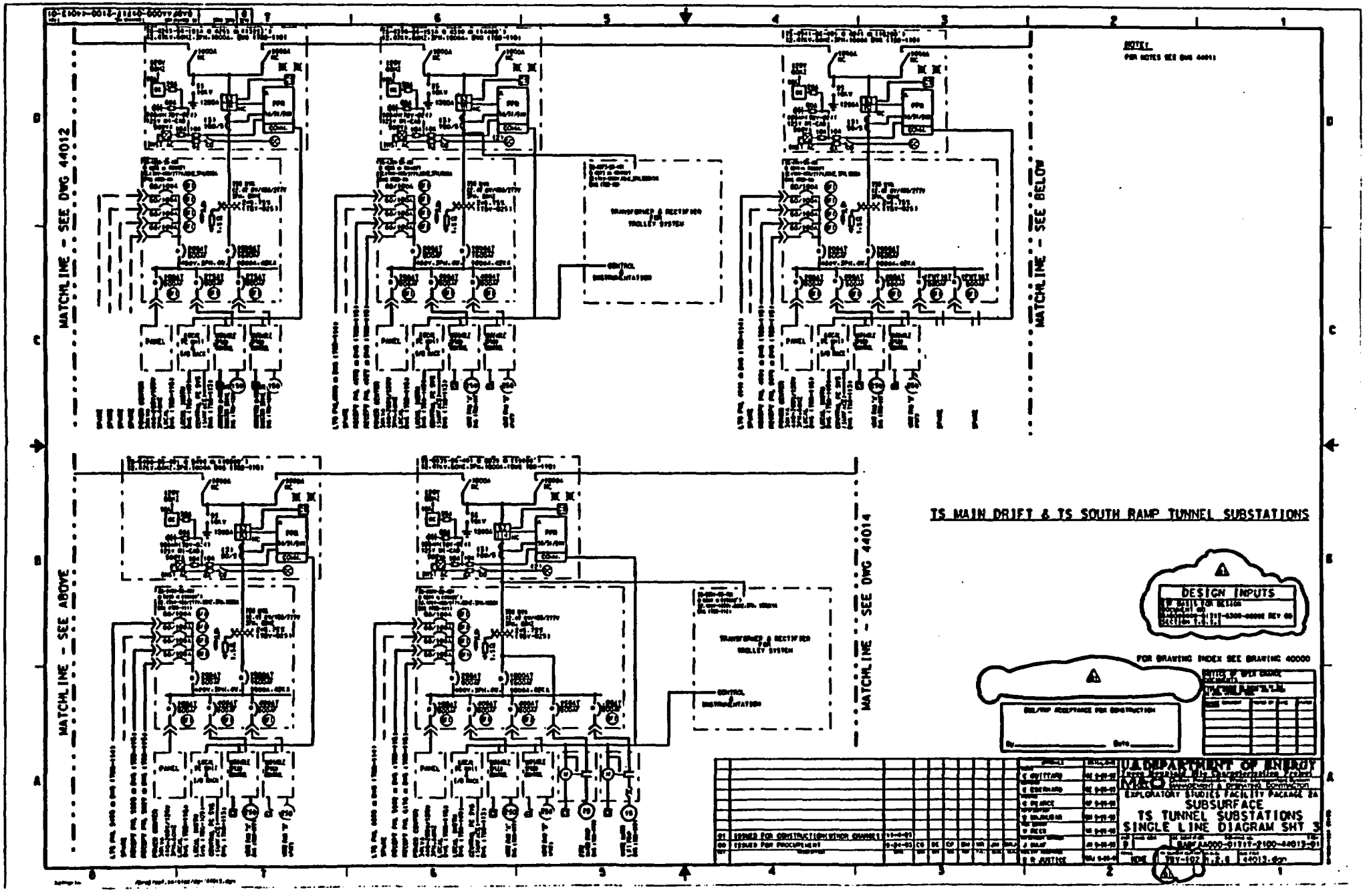
MATCHLINE - SEE DWG 44012
MATCHLINE - SEE BELOW
MATCHLINE - SEE ABOVE
MATCHLINE - SEE DWG 44014
TS MAIN DRIFT & TS SOUTH RAMP TUNNEL SUBSTATIONS
DESIGN INPUTS
FOR DRAWING INDEX SEE DRAWING 40000
U.S. DEPARTMENT OF ENERGY
M&O
EXPLORATORY STUDIES FACILITY PACKAGE 2A
SUBSURFACE
TS TUNNEL SUBSTATIONS
SINGLE LINE DIAGRAM SHT 3

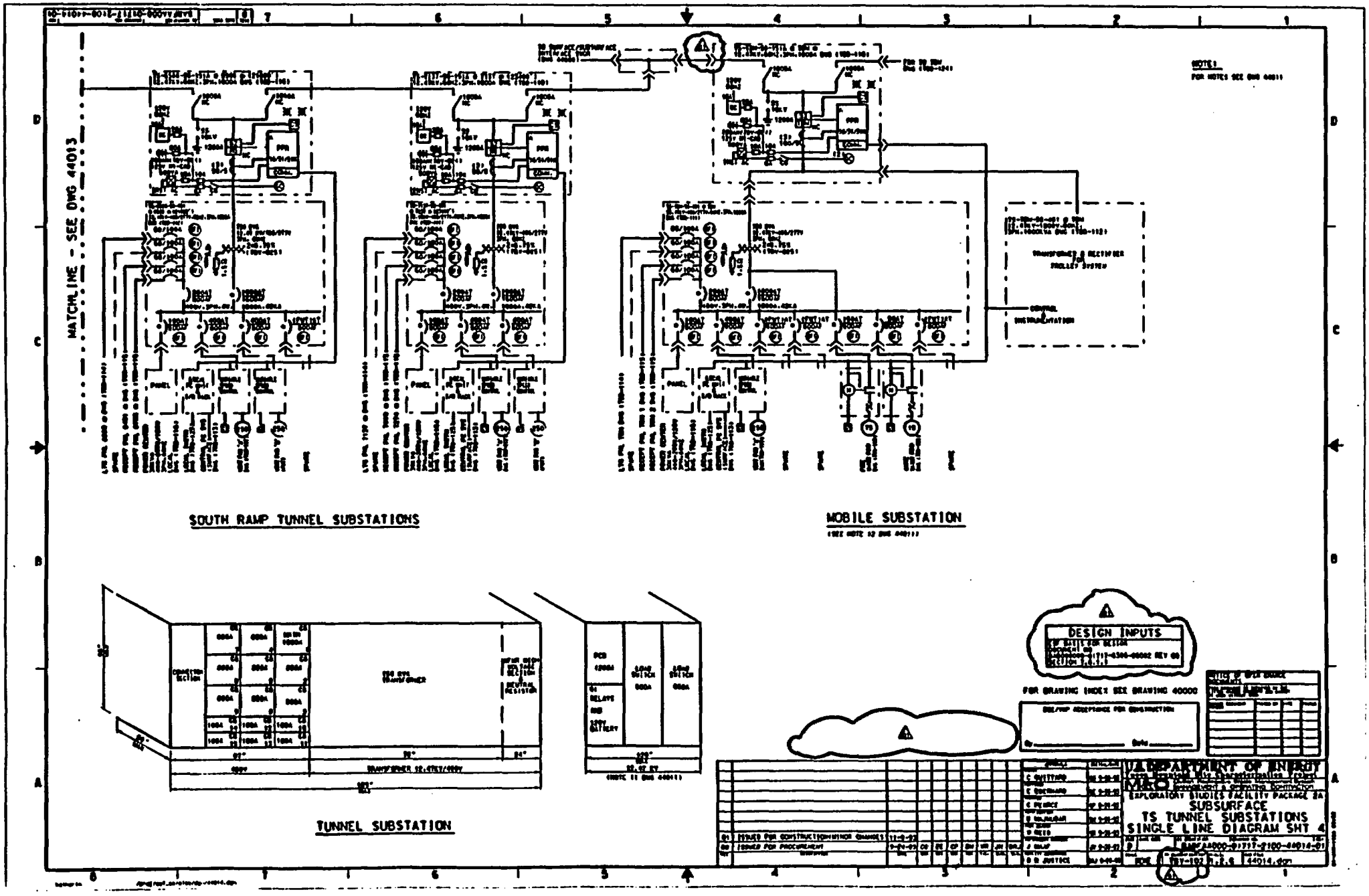
MATCHLINE - SEE DWG 44013
SOUTH RAMP TUNNEL SUBSTATIONS
MOBILE SUBSTATION
TUNNEL SUBSTATION
DESIGN INPUTS
FOR DRAWING INDEX SEE DRAWING 40000
U.S. DEPARTMENT OF ENERGY
MRO
EXPLORATORY STUDIES FACILITY PACKAGE 2A
SUBSURFACE
TS TUNNEL SUBSTATIONS
SINGLE LINE DIAGRAM SHT 4
ISSUED FOR CONSTRUCTION
ISSUED FOR PROCUREMENT

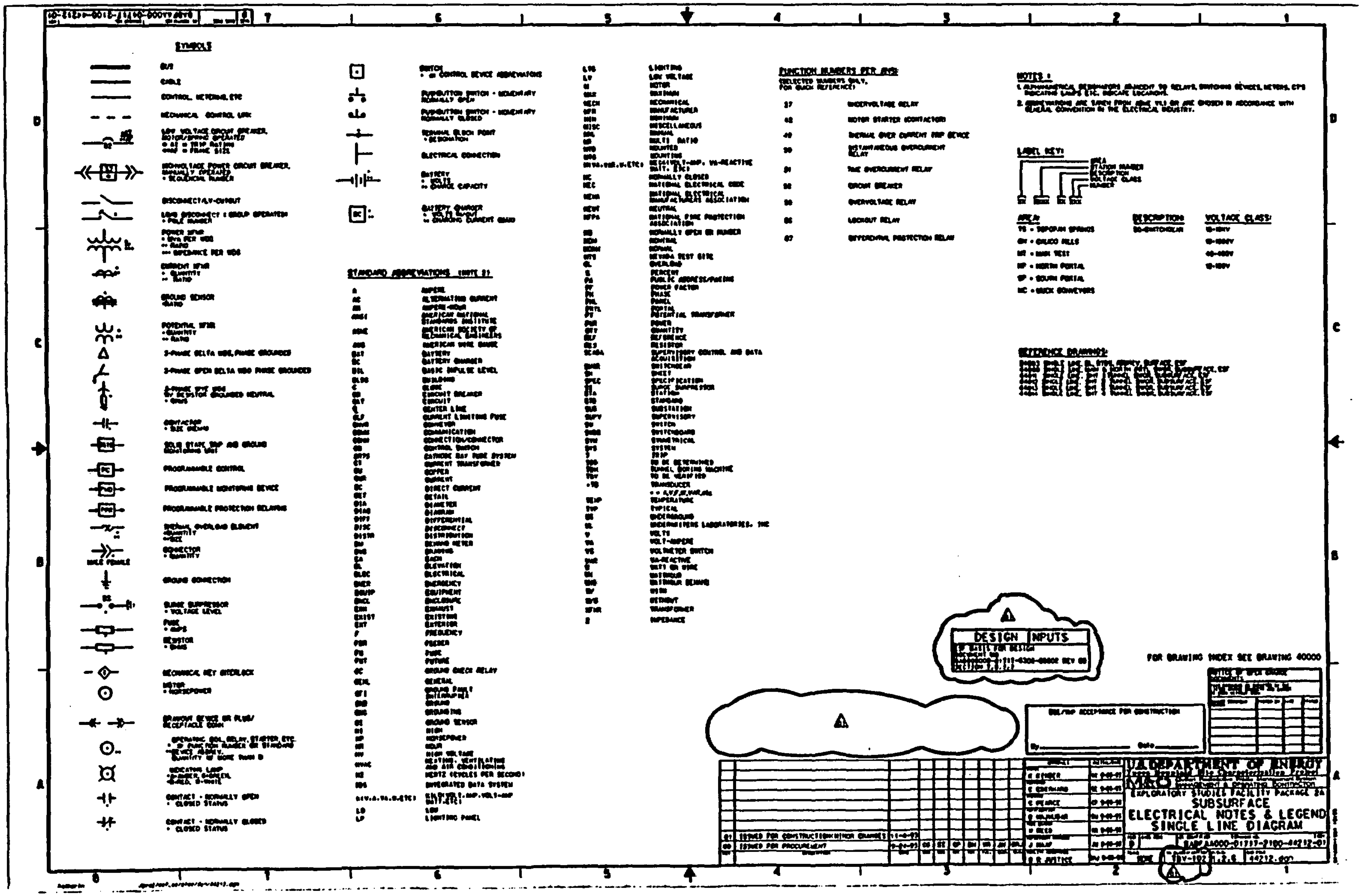
SYMBOLS
STANDARD ABBREVIATIONS (NOTE 2)
FUNCTION NUMBERS PER ANSI
(SELECTED NUMBERS ONLY, FOR QUICK REFERENCE)
27 UNDERVOLTAGE RELAY
42 MOTOR STARTER (CONTACTOR)
49 THERMAL OVER CURRENT TRIP DEVICE
50 INSTANTANEOUS OVERCURRENT RELAY
51 TIME OVERCURRENT RELAY
52 CIRCUIT BREAKER
59 OVERVOLTAGE RELAY
86 LOCKOUT RELAY
87 DIFFERENTIAL PROTECTION RELAY
NOTES:
1. ALPHANUMERICAL DESIGNATORS ADJACENT TO RELAYS, SWITCHING DEVICES, METERS, CTS INDICATING LAMPS ETC. INDICATE LOCATIONS.
2. ABBREVIATIONS ARE TAKEN FROM ANSI Y1.1 OR ARE CHOSEN IN ACCORDANCE WITH GENERAL CONVENTION IN THE ELECTRICAL INDUSTRY.
LABEL KEY:
AREA
STATION NUMBER
DESCRIPTION
VOLTAGE CLASS
NUMBER
AREA:
DESCRIPTION
VOLTAGE CLASS:
REFERENCE DRAWINGS:
DESIGN INPUTS
FOR DRAWING INDEX SEE DRAWING 40000
ISSUED FOR CONSTRUCTION (MINOR CHANGES)
ISSUED FOR PROCUREMENT
U.S. DEPARTMENT OF ENERGY
M&O
EXPLORATORY STUDIES FACILITY PACKAGE 2A
SUBSURFACE
ELECTRICAL NOTES & LEGEND
SINGLE LINE DIAGRAM

Metal-Clad Cable Code Review Analysis

- Purpose
  - To determine the code requirements for the use of Metal-Clad Cable for Medium Voltage application in the Subsurface Design
- Quality Assurance
  - TBV Pending Completion of DIE
- Methods
  - Analytical review of the code requirements

Metal-Clad Cable Code Review Analysis
(continued)

- Codes & Standards
  - Code of Federal Regulations (CFR)
  - American National Standards Institute (ANSI)/National Fire Protection Association (NFPA)
  - United States Department of Energy (DOE)
  - California Code of Regulations (CCR)
- Design Inputs
  - YMP/CM-0019-ESF-Design Requirements (ESFDR)

Metal-Clad Cable Code Review Analysis
(continued)

- Criteria
  - Not Applicable
- Assumptions
  - Not Applicable
- Sources of Information
  - Code of Federal Regulations (CFR)
  - American National Standards Institute (ANSI)/National Fire Protection Association (NFPA)
  - United States Department of Energy (DOE)
  - California Code of Regulations (CCR)

Metal-Clad Cable Code Review Analysis
(continued)

- Computer Programs
  - Not Applicable
- Analysis
  - Analysis as indicated

Metal-Clad Cable Code Review Analysis
(continued)

- Conclusions
  - The medium voltage feeder cables are not required by code to be Type MC cable and may be installed in any approved method
  - The mobile substation/TBM feeder cable must be type MC cable or multiconductor cable approved for the application
  - Use Mine Power Cable type MP-GC for permanent and mobile substation feeders, and use Shovel and Dragline Cable type SHD-GC for the TBM trailing cable

Note: This will require a change to the ESFDR

Electrical Subsurface Grounding Analysis

- Purpose
  - To determine the grounding requirements for the ESF Subsurface area
  - Provide information on lightning protection and equipment grounding and bonding
- Quality Assurance
  - TBV Pending Completion of DIE
- Methods
  - Analytical Using Conventional Engineering Practices

Electrical Subsurface Grounding Analysis
(continued)

- Codes & Standards
  - Code of Federal Regulations (CFR)
  - American National Standards Institute (ANSI)
  - California Electrical Code (CEC)
  - California Code of Regulations (CCR)
  - Institute of Electrical and Electronics Engineers (IEEE)
  - National Fire Protection Association (NFPA)
  - U.S. Department of Energy (DOE)
  - U.S. Department of Interior/Bureau of Mines (DOI/BOM)

Electrical Subsurface Grounding Analysis
(continued)

- Criteria
  - DOE 6430-1A
  - DOE ESFDR/CM-0019
- Design Inputs
  - Project Single Line Diagrams
  - ESF Basis for Design (BFD)

Electrical Subsurface Grounding Analysis
(continued)

- Assumptions
  - Formulas used are valid for increase of resistivity with depth
  - Schwarz's Formula for calculating ground resistance is valid for existing soil conditions as measured per IEEE Standard 81-83
  - The formula in IEEE 80-86 for embedding ground rods in concrete is valid when using resistivity enhancement back packing
  - The coefficient curves in Figure 18 in IEEE 80 are considered linear and may be interpolated linearly as required for calculations
  - Other assumptions as listed

Electrical Subsurface Grounding Analysis
(continued)

- Sources of Information
  - DOE 6330.1A
  - YMP/CM-0019 - ESF - Design Requirements
  - YMP/CM-0016 - ESF - Technical Baseline
  - Raytheon Services Nevada (RSN) BFD-001, Basis for Design
  - M&O - ESF - Basis for Design
  - IEEE Publications Listed
  - Single Line Diagrams
  - Other Listed Material

Electrical Subsurface Grounding Analysis
(continued)

- Computer Applications
  - None
- Body
  - Calculations as indicated
- Conclusions
  - Tunnel safety grid resistance will be less than or equal to 2 ohms
  - Others as listed in Appendix A and Appendix B

Subsurface Electric Trolley System Specification

- Includes Design, Manufacture and Delivery of the Electric Trolley System
- Quality Assurance is TBV Pending Completion of DIE
- Products
  - 15,580 m (51,115′) of Trolley Conductor
  - Disconnect and Section Isolation Switches
  - 1000 kW Rectifier Units
  - Main Contactor
  - Main DC Switch
  - 15 kV 3-Phase Load Break Switch

Subsurface Electric Trolley System Specification
(continued)

- Products (continued)
  - 12.47 kV Dry-Type Transformer
  - Utility and Lighting System (5 kVA)
  - Tunnel Center Type Enclosure
- Execution
  - Installation of system
  - Provide Technical Assistance and Training
  - Field Testing

Subsurface Electric Trolley System Specification
(continued)

- Submittals & Notification
  - Erection Drawings
  - Shop Drawings
  - Single Line Diagrams
  - Certified Test/Inspection Reports
  - O&M Manuals
  - Others as Listed

Subsurface Monitoring and Warning System

Subsurface Monitoring and Warning System Specification

- Provide a PC-based hardware and software data acquisition system, area gas sensors and transmitters
- Quality Assurance is TBV Pending Completion of DIE
- Products
  - Personal Computer (PC) system, complete with monitor and printer
  - Microprocessor-based RTU's
  - Gas Sensors

Subsurface Monitoring and Warning System
(continued)

Subsurface Monitoring and Warning System Specification (continued)

- Products (continued)
  - Radon Monitor
  - Noise or Sound Monitoring
  - Relative Humidity
  - Dust Monitoring
  - Redundant System
  - Alarm/Event Logger

Subsurface Monitoring and Warning System
(continued)

Subsurface Monitoring and Warning System Specification (continued)

- Execution
  - Acceptance Test
  - Operator and Technical Training
  - Calibration and Commissioning
- Submittals & Notification
  - Schedule Information
  - Layout/Interconnection Drawings
  - Performance Data
  - Others as Indicated

Subsurface Monitoring and Warning System
(continued)

P&ID Drawings

- 43004 - Subsurface Life Safety & Monitoring Equipment P&ID Sht 1
- 43005 - Subsurface Life Safety & Monitoring Equipment P&ID Sht 2

NOTES:

1. FOR LEGEND, SYMBOLS & ADDITIONAL NOTES SEE DRAWING 43000.
2. TYPICAL TUNNEL GAS ANALYZER STATION. SEE GAS ANALYZER STATION TABLE FOR INSTRUMENTATION TAG NUMBERS. GAS ANALYZERS MONITOR TUNNEL ENVIRONMENT CONDITIONS.
3. AT EACH BOOSTER FAN LOCATION THERE WILL BE A TUNNEL GAS ANALYZER STATION.
4. THE AN TAG IS A SENSOR/TRANSMITTER MALFUNCTION ALARM
5. THE PC BASED MONITORING SYSTEM FOR SAFETY REASONS [illegible] FROM THE VENTILATION MONITORING SYSTEM. THIS WILL MEET THE REQUIREMENTS OF YUCCA MOUNTAIN SITE CHARACTERIZATION PROJECT DOCUMENT NO. YMP/CM-0015, EXPLORATORY STUDY FACILITY DESIGN REQUIREMENTS.
6. 'XXXX' DENOTES TAG NUMBER ON TABLES. SEE DWG 43005.

REFERENCES:

SUBSURFACE LIFE SAFETY & MONITORING EQUIPMENT P & ID SHT 2 DWG 43005
CONTROL & MONITORING SYS BLOCK DIAG DWG 43000

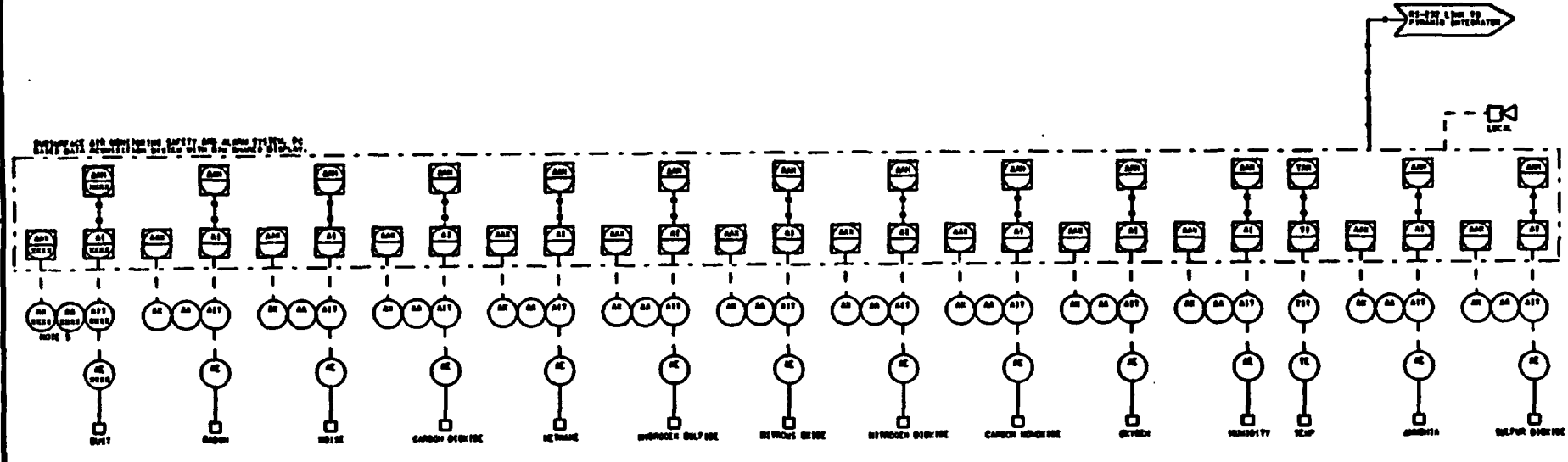

FOR DRAWING INDEX SEE DRAWING 39001

TUNNEL GAS ANALYZER STATION

DESIGN INPUTS
[illegible]

1-6-94	[illegible]	[illegible]	ISSUED FOR 90% REVIEW

U.S. DEPARTMENT OF ENERGY
MRS
REPOSITORY & OPERATIONS DIVISION
EXPLORATORY STUDIES FACILITY PACKAGE 33
SUBSURFACE LIFE SAFETY & MONITORING EQUIPMENT P & ID SHT 1

YD-S00(?)-0015-21110-000 ...

GAS ANALYZER STATION TABLE

TAG NUMBERS - 'SXXX'

STATION NO. (TBV-)	DUST AE	DUST AIT	DUST AI	DUST AAH	DUST AY	DUST AAL	DUST AH	RADON AE	RADON AIT	RADON AI	RADON AAH	RADON AY	RADON AAL	RADON AH	[illegible] AE	[illegible] AIT	[illegible] AI	[illegible] AAH	[illegible] AY	[illegible] AAL	[illegible] AH
00+30.40 m	S001	S001	S001	S001	S001	S001	S001	S002	S002	S002	S002	S002	S002	S002	S003	S003	S003	S003	S003	S003	S003
05+10.16 m	S015	S015	S015	S015	S015	S015	S015	S016	S016	S016	S016	S016	S016	S016	S017	S017	S017	S017	S017	S017	S017
10+36.22 m	S029	S029	S029	S029	S029	S029	S029	S030	S030	S030	S030	S030	S030	S030	S031	S031	S031	S031	S031	S031	S031
15+54.45 m	S043	S043	S043	S043	S043	S043	S043	S044	S044	S044	S044	S044	S044	S044	S045	S045	S045	S045	S045	S045	S045
20+72.64 m	S057	S057	S057	S057	S057	S057	S057	S058	S058	S058	S058	S058	S058	S058	S059	S059	S059	S059	S059	S059	S059
25+90.86 m	S071	S071	S071	S071	S071	S071	S071	S072	S072	S072	S072	S072	S072	S072	S073	S073	S073	S073	S073	S073	S073
31+09.08 m	S085	S085	S085	S085	S085	S085	S085	S086	S086	S086	S086	S086	S086	S086	S087	S087	S087	S087	S087	S087	S087
36+27.12 m	S099	S099	S099	S099	S099	S099	S099	S100	S100	S100	S100	S100	S100	S100	S101	S101	S101	S101	S101	S101	S101
41+45.30 m	S113	S113	S113	S113	S113	S113	S113	S114	S114	S114	S114	S114	S114	S114	S115	S115	S115	S115	S115	S115	S115
46+63.44 m	S127	S127	S127	S127	S127	S127	S127	S128	S128	S128	S128	S128	S128	S128	S129	S129	S129	S129	S129	S129	S129
51+81.66 m	S141	S141	S141	S141	S141	S141	S141	S142	S142	S142	S142	S142	S142	S142	S143	S143	S143	S143	S143	S143	S143
56+99.76 m	S155	S155	S155	S155	S155	S155	S155	S156	S156	S156	S156	S156	S156	S156	S157	S157	S157	S157	S157	S157	S157
62+17.92 m	S169	S169	S169	S169	S169	S169	S169	S170	S170	S170	S170	S170	S170	S170	S171	S171	S171	S171	S171	S171	S171
67+36.08 m	S183	S183	S183	S183	S183	S183	S183	S184	S184	S184	S184	S184	S184	S184	S185	S185	S185	S185	S185	S185	S185
72+54.24 m	S197	S197	S197	S197	S197	S197	S197	S198	S198	S198	S198	S198	S198	S198	S199	S199	S199	S199	S199	S199	S199
	S211	S211	S211	S211	S211	S211	S211	S212	S212	S212	S212	S212	S212	S212	S213	S213	S213	S213	S213	S213	S213

STATION NO. (TBV-)	CARBON DIOXIDE AE	CARBON DIOXIDE AIT	CARBON DIOXIDE AI	CARBON DIOXIDE AAH	CARBON DIOXIDE AY	CARBON DIOXIDE AAL	CARBON DIOXIDE AH	METHANE AE	METHANE AIT	METHANE AI	METHANE AAH	METHANE AY	METHANE AAL	METHANE AH	HYDROGEN SULFIDE AE	HYDROGEN SULFIDE AIT	HYDROGEN SULFIDE AI	HYDROGEN SULFIDE AAH	HYDROGEN SULFIDE AY	HYDROGEN SULFIDE AAL	HYDROGEN SULFIDE AH
00+30.40 m	S004	S004	S004	S004	S004	S004	S004	S005	S005	S005	S005	S005	S005	S005	S006	S006	S006	S006	S006	S006	S006
05+10.16 m	S018	S018	S018	S018	S018	S018	S018	S019	S019	S019	S019	S019	S019	S019	S020	S020	S020	S020	S020	S020	S020
10+36.22 m	S032	S032	S032	S032	S032	S032	S032	S033	S033	S033	S033	S033	S033	S033	S034	S034	S034	S034	S034	S034	S034
15+54.45 m	S046	S046	S046	S046	S046	S046	S046	S047	S047	S047	S047	S047	S047	S047	S048	S048	S048	S048	S048	S048	S048
20+72.64 m	S060	S060	S060	S060	S060	S060	S060	S061	S061	S061	S061	S061	S061	S061	S062	S062	S062	S062	S062	S062	S062
25+90.86 m	S074	S074	S074	S074	S074	S074	S074	S075	S075	S075	S075	S075	S075	S075	S076	S076	S076	S076	S076	S076	S076
31+09.08 m	S088	S088	S088	S088	S088	S088	S088	S089	S089	S089	S089	S089	S089	S089	S090	S090	S090	S090	S090	S090	S090
36+27.12 m	S102	S102	S102	S102	S102	S102	S102	S103	S103	S103	S103	S103	S103	S103	S104	S104	S104	S104	S104	S104	S104
41+45.30 m	S116	S116	S116	S116	S116	S116	S116	S117	S117	S117	S117	S117	S117	S117	S118	S118	S118	S118	S118	S118	S118
46+63.44 m	S130	S130	S130	S130	S130	S130	S130	S131	S131	S131	S131	S131	S131	S131	S132	S132	S132	S132	S132	S132	S132
51+81.66 m	S144	S144	S144	S144	S144	S144	S144	S145	S145	S145	S145	S145	S145	S145	S146	S146	S146	S146	S146	S146	S146
56+99.76 m	S158	S158	S158	S158	S158	S158	S158	S159	S159	S159	S159	S159	S159	S159	S160	S160	S160	S160	S160	S160	S160
62+17.92 m	S172	S172	S172	S172	S172	S172	S172	S173	S173	S173	S173	S173	S173	S173	S174	S174	S174	S174	S174	S174	S174
67+36.08 m	S186	S186	S186	S186	S186	S186	S186	S187	S187	S187	S187	S187	S187	S187	S188	S188	S188	S188	S188	S188	S188
72+54.24 m	S200	S200	S200	S200	S200	S200	S200	S201	S201	S201	S201	S201	S201	S201	S202	S202	S202	S202	S202	S202	S202
	S214	S214	S214	S214	S214	S214	S214	S215	S215	S215	S215	S215	S215	S215	S216	S216	S216	S216	S216	S216	S216

GAS ANALYZER STATION TABLE

TAG NUMBERS - 'SXXX'

STATION NO.	NITROUS OXIDE AE	NITROUS OXIDE AIT	NITROUS OXIDE AI	NITROUS OXIDE AAH	NITROUS OXIDE AY	NITROUS OXIDE AAL	NITROUS OXIDE AH	NITROGEN DIOXIDE AE	NITROGEN DIOXIDE AIT	NITROGEN DIOXIDE AI	NITROGEN DIOXIDE AAH	NITROGEN DIOXIDE AY	NITROGEN DIOXIDE AAL	NITROGEN DIOXIDE AH	CARBON MONOXIDE AE	CARBON MONOXIDE AIT	CARBON MONOXIDE AI	CARBON MONOXIDE AAH	CARBON MONOXIDE AY	CARBON MONOXIDE AAL	CARBON MONOXIDE AH
00+30.40 m	S007	S007	S007	S007	S007	S007	S007	S008	S008	S008	S008	S008	S008	S008	S009	S009	S009	S009	S009	S009	S009
05+10.16 m	S021	S021	S021	S021	S021	S021	S021	S022	S022	S022	S022	S022	S022	S022	S023	S023	S023	S023	S023	S023	S023
10+36.22 m	S035	S035	S035	S035	S035	S035	S035	S036	S036	S036	S036	S036	S036	S036	S037	S037	S037	S037	S037	S037	S037
15+54.45 m	S049	S049	S049	S049	S049	S049	S049	S050	S050	S050	S050	S050	S050	S050	S051	S051	S051	S051	S051	S051	S051
20+72.64 m	S063	S063	S063	S063	S063	S063	S063	S064	S064	S064	S064	S064	S064	S064	S065	S065	S065	S065	S065	S065	S065
25+90.86 m	S077	S077	S077	S077	S077	S077	S077	S078	S078	S078	S078	S078	S078	S078	S079	S079	S079	S079	S079	S079	S079
31+09.08 m	S091	S091	S091	S091	S091	S091	S091	S092	S092	S092	S092	S092	S092	S092	S093	S093	S093	S093	S093	S093	S093
36+27.12 m	S105	S105	S105	S105	S105	S105	S105	S106	S106	S106	S106	S106	S106	S106	S107	S107	S107	S107	S107	S107	S107
41+45.30 m	S119	S119	S119	S119	S119	S119	S119	S120	S120	S120	S120	S120	S120	S120	S121	S121	S121	S121	S121	S121	S121
46+63.44 m	S133	S133	S133	S133	S133	S133	S133	S134	S134	S134	S134	S134	S134	S134	S135	S135	S135	S135	S135	S135	S135
51+81.66 m	S147	S147	S147	S147	S147	S147	S147	S148	S148	S148	S148	S148	S148	S148	S149	S149	S149	S149	S149	S149	S149
56+99.76 m	S161	S161	S161	S161	S161	S161	S161	S162	S162	S162	S162	S162	S162	S162	S163	S163	S163	S163	S163	S163	S163
62+17.92 m	S175	S175	S175	S175	S175	S175	S175	S176	S176	S176	S176	S176	S176	S176	S177	S177	S177	S177	S177	S177	S177
67+36.08 m	S189	S189	S189	S189	S189	S189	S189	S190	S190	S190	S190	S190	S190	S190	S191	S191	S191	S191	S191	S191	S191
72+54.24 m	S203	S203	S203	S203	S203	S203	S203	S204	S204	S204	S204	S204	S204	S204	S205	S205	S205	S205	S205	S205	S205
	S217	S217	S217	S217	S217	S217	S217	S218	S218	S218	S218	S218	S218	S218	S219	S219	S219	S219	S219	S219	S219

STATION NO.	OXYGEN AE	OXYGEN AIT	OXYGEN AI	OXYGEN AAH	OXYGEN AY	OXYGEN AAL	OXYGEN AH	HUMIDITY AE	HUMIDITY AIT	HUMIDITY AI	HUMIDITY AAH	HUMIDITY AY	HUMIDITY AAL	HUMIDITY AH	TEMP TAH	TEMP TI	TEMP TIT	TEMP TE	AMMONIA AE	AMMONIA AIT	AMMONIA AI	AMMONIA AAH	AMMONIA AY	AMMONIA AAL	AMMONIA AH
00+30.40 m	S010	S010	S010	S010	S010	S010	S010	S011	S011	S011	S011	S011	S011	S011	S012	S012	S012	S012	S013	S013	S013	S013	S013	S013	S013
05+10.16 m	S024	S024	S024	S024	S024	S024	S024	S025	S025	S025	S025	S025	S025	S025	S026	S026	S026	S026	S027	S027	S027	S027	S027	S027	S027
10+36.22 m	S038	S038	S038	S038	S038	S038	S038	S039	S039	S039	S039	S039	S039	S039	S040	S040	S040	S040	S041	S041	S041	S041	S041	S041	S041
15+54.45 m	S052	S052	S052	S052	S052	S052	S052	S053	S053	S053	S053	S053	S053	S053	S054	S054	S054	S054	S055	S055	S055	S055	S055	S055	S055
20+72.64 m	S066	S066	S066	S066	S066	S066	S066	S067	S067	S067	S067	S067	S067	S067	S068	S068	S068	S068	S069	S069	S069	S069	S069	S069	S069
25+90.86 m	S080	S080	S080	S080	S080	S080	S080	S081	S081	S081	S081	S081	S081	S081	S082	S082	S082	S082	S083	S083	S083	S083	S083	S083	S083
31+09.08 m	S094	S094	S094	S094	S094	S094	S094	S095	S095	S095	S095	S095	S095	S095	S096	S096	S096	S096	S097	S097	S097	S097	S097	S097	S097
36+27.12 m	S108	S108	S108	S108	S108	S108	S108	S109	S109	S109	S109	S109	S109	S109	S110	S110	S110	S110	S111	S111	S111	S111	S111	S111	S111
41+45.30 m	S122	S122	S122	S122	S122	S122	S122	S123	S123	S123	S123	S123	S123	S123	S124	S124	S124	S124	S125	S125	S125	S125	S125	S125	S125
46+63.44 m	S136	S136	S136	S136	S136	S136	S136	S137	S137	S137	S137	S137	S137	S137	S138	S138	S138	S138	S139	S139	S139	S139	S139	S139	S139
51+81.66 m	S150	S150	S150	S150	S150	S150	S150	S151	S151	S151	S151	S151	S151	S151	S152	S152	S152	S152	S153	S153	S153	S153	S153	S153	S153
56+99.76 m	S164	S164	S164	S164	S164	S164	S164	S165	S165	S165	S165	S165	S165	S165	S166	S166	S166	S166	S167	S167	S167	S167	S167	S167	S167
62+17.92 m	S178	S178	S178	S178	S178	S178	S178	S179	S179	S179	S179	S179	S179	S179	S180	S180	S180	S180	S181	S181	S181	S181	S181	S181	S181
67+36.08 m	S192	S192	S192	S192	S192	S192	S192	S193	S193	S193	S193	S193	S193	S193	S194	S194	S194	S194	S195	S195	S195	S195	S195	S195	S195
72+54.24 m	S206	S206	S206	S206	S206	S206	S206	S207	S207	S207	S207	S207	S207	S207	S208	S208	S208	S208	S209	S209	S209	S209	S209	S209	S209
	S220	S220	S220	S220	S220	S220	S220	S221	S221	S221	S221	S221	S221	S221	S222	S222	S222	S222	S223	S223	S223	S223	S223	S223	S223

GAS ANALYZER STATION TABLE

TAG NUMBERS

STATION NO.	NITROGEN DIOXIDE AE	NITROGEN DIOXIDE AIT	NITROGEN DIOXIDE AI	NITROGEN DIOXIDE AAH	NITROGEN DIOXIDE AY	NITROGEN DIOXIDE AAL	NITROGEN DIOXIDE AH
00+30.40 m	S014	S014	S014	S014	S014	S014	S014
05+10.16 m	S028	S028	S028	S028	S028	S028	S028
10+36.22 m	S042	S042	S042	S042	S042	S042	S042
15+54.40 m	S056	S056	S056	S056	S056	S056	S056
20+72.64 m	S070	S070	S070	S070	S070	S070	S070
25+90.86 m	S084	S084	S084	S084	S084	S084	S084
31+09.08 m	S098	S098	S098	S098	S098	S098	S098
36+27.12 m	S112	S112	S112	S112	S112	S112	S112
41+45.30 m	S126	S126	S126	S126	S126	S126	S126
46+63.44 m	S140	S140	S140	S140	S140	S140	S140
51+81.66 m	S154	S154	S154	S154	S154	S154	S154
56+99.76 m	S168	S168	S168	S168	S168	S168	S168
62+17.92 m	S182	S182	S182	S182	S182	S182	S182
67+36.08 m	S196	S196	S196	S196	S196	S196	S196
72+54.24 m	S210	S210	S210	S210	S210	S210	S210
	S224	S224	S224	S224	S224	S224	S224

DESIGN INPUTS

TBV BASIS FOR DESIGN DOCUMENT NO. [illegible]-01717-4300-00002 REV 00 SECTION 1.2.7.10

FOR DRAWING INDEX SEE DRAWING 39001

NOTES:

FOR LEGEND, SYMBOLS & ADDITIONAL NOTES SEE DRAWING 43000

REFERENCES:

SUBSURFACE LIFE SAFETY MONITORING EQUIPMENT P & ID SHT 1 DWG 43004

CONTROL & MONITORING SYS BLOCK DIAG DWG 43000

DOE/M&O ACCEPTANCE FOR CONSTRUCTION

By__________ Date__________

ISSUED FOR DOE REVIEW

U.S. DEPARTMENT OF ENERGY

Yucca Mountain Site Characterization Project

M&O Civilian Radioactive Waste Management System Management & Operating Contractor

EXPLORATORY STUDIES FACILITY PACKAGE 2B

SUBSURFACE LIFE SAFETY MONITORING EQUIPMENT P & ID SHT 2

BABFAJ000-01717-2100-43005-04

TBV-

1.2.6

FILE:SS:43005.dgn

PRELIMINARY

Control System

Control System Analysis

- Purpose
  - To investigate alternative approaches for the selection of an integrated control system
- Quality Assurance
  - TBV Pending Completion of DIE
- Methods
  - Review of two industrial control system technologies

Control System
(continued)

Control System Analysis (continued)

- Codes & Standards
  - American National Standards Institute, Inc. (ANSI)
  - Instrument Society of America (ISA)
- Design Inputs
  - YMP/CM-0019 ESF Design Requirements (ESFDR)
- Assumptions
  - Stand-alone PLC based control packages will be provided for mechanical equipment

Control System
(continued)

Control System Analysis (continued)

- Assumptions (continued)
  - Data Collection and Monitoring Systems will maintain real time communications with the control system
  - Other Assumptions as Listed
- Computer Programs
  - None
- Body
  - Analysis as indicated

Control System
(continued)

Control System Analysis (continued)

- Conclusion
  - Each Mechanical System will have a network of individual PLC's linked to a master PLC that will communicate to a central control system
  - All individual and system PLC's share a common data link and can be sourced from the same manufacturer
  - Ventilation System shall have redundant PLC's in a "hot-backup" configuration

Control System
(continued)

Control System Analysis (continued)

- Conclusion (continued)
  - Control System communicates over Ethernet TCP/IP Protocol to interface with proposed IDS system
  - Other conclusions as indicated

Control System
(continued)

Control System Specification

- Includes Design, Supply, Fabrication, and performance of the control system. Includes all the necessary hardware and software for a complete system as indicated
- Quality Assurance
  - TBV Pending Completion of DIE
- Products
  - Master PLC with Ethernet Interface Module
  - Two (2) Operator Workstations
  - Software (as required)
  - LAN for Operator Interface System

Control System
(continued)

Control System Specification (continued)

- Products (continued)
  - Data Communication System
  - Remote PLC I/O
  - Other Products as indicated
- Execution
  - Installation by a qualified technician
  - Factory Acceptance Test
  - Site Acceptance Test
  - Training

Control System
(continued)

Control System Specification (continued)

- Submittals & Notification
  - Drawings
  - Ladder Logic program listing
  - Data Base Listings
  - O&M Manuals

Control System
(continued)

Drawings

- 44050 - Integrated Control System Logic Diagram
- 44060 - Control & Monitoring System Block Diagram
- 43000 - Subsurface Electrical Notes & Legend P&ID
- 43001 - Surface Muck Conveyors P&ID Sht 1
- 43002 - Surface Muck Conveyors P&ID Sht 2
- 43003 - Construction Process and Firewater Chemical Tracer Injection P&ID
- 43004 - Subsurface Life Safety & Monitoring Equipment P&ID Sht 1

Control System
(continued)

Drawings (continued)

- 43005 - Subsurface Life Safety & Monitoring Equipment P&ID Sht 2
- 43006 - Subsurface Muck Conveyors P&ID Sht 1
- 43007 - Subsurface Muck Conveyors P&ID Sht 2
- 43008 - Subsurface Ventilation System P&ID Sht 1
- 43009 - Subsurface Ventilation System P&ID Sht 2
- 43010 - Subsurface Fire Protection P&ID Sht 1

Control System
(continued)

Drawings (continued)

- 43011 - Subsurface Fire Protection P&ID Sht 2
- 43012 - Compressed Air Chemical Tracer Injection System P&ID
- 43018 - Subsurface Security/Communication Flow Diagram
- 44213 - Subsurface Electrical Notes & Legend Lighting & Power

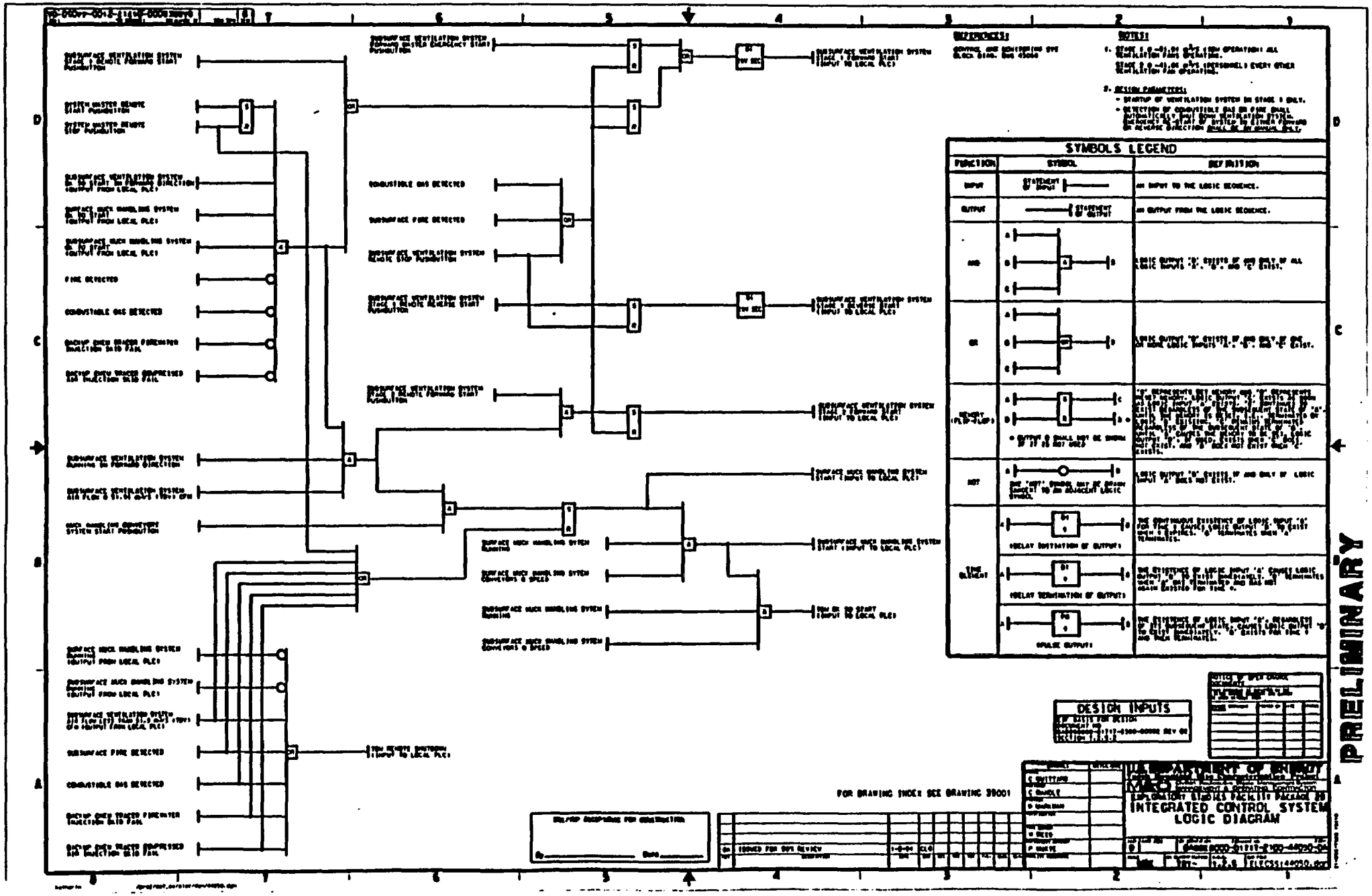
SYMBOLS LEGEND
FUNCTION
SYMBOL
DEFINITION
INPUT
OUTPUT
AND
OR
MEMORY (FLIP-FLOP)
NOT
TIME OUTPUT
DESIGN INPUTS
INTEGRATED CONTROL SYSTEM
LOGIC DIAGRAM
PRELIMINARY

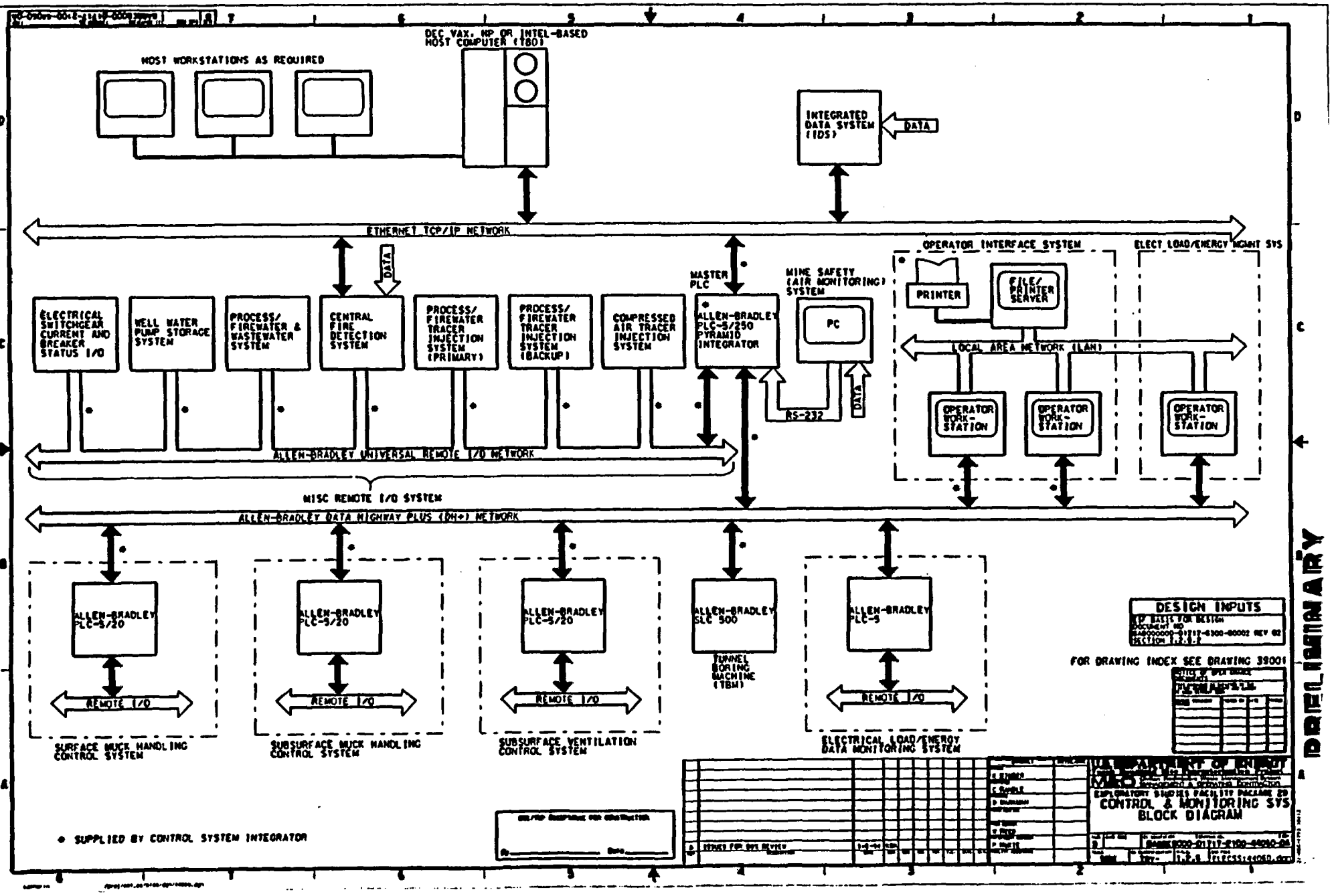
HOST WORKSTATIONS AS REQUIRED
DEC VAX, HP OR INTEL-BASED HOST COMPUTER (TBD)
INTEGRATED DATA SYSTEM (IDS)
DATA
ETHERNET TCP/IP NETWORK
OPERATOR INTERFACE SYSTEM
ELECT LOAD/ENERGY MGMT SYS
PRINTER
FILE/ PRINTER SERVER
LOCAL AREA NETWORK (LAN)
OPERATOR WORK-STATION
OPERATOR WORK-STATION
OPERATOR WORK-STATION
MASTER PLC
MINE SAFETY (AIR MONITORING) SYSTEM
PC
RS-232
DATA
ELECTRICAL SWITCHGEAR CURRENT AND BREAKER STATUS I/O
WELL WATER PUMP STORAGE SYSTEM
PROCESS/ FIREWATER & WASTEWATER SYSTEM
CENTRAL FIRE DETECTION SYSTEM
PROCESS/ FIREWATER TRACER INJECTION SYSTEM (PRIMARY)
PROCESS/ FIREWATER TRACER INJECTION SYSTEM (BACKUP)
COMPRESSED AIR TRACER INJECTION SYSTEM
ALLEN-BRADLEY PLC-5/250 PYRAMID INTEGRATOR
ALLEN-BRADLEY UNIVERSAL REMOTE I/O NETWORK
MISC REMOTE I/O SYSTEM
ALLEN-BRADLEY DATA HIGHWAY PLUS (DH+) NETWORK
ALLEN-BRADLEY PLC-5/20
REMOTE I/O
SURFACE MUCK HANDLING CONTROL SYSTEM
ALLEN-BRADLEY PLC-5/20
REMOTE I/O
SUBSURFACE MUCK HANDLING CONTROL SYSTEM
ALLEN-BRADLEY PLC-5/20
REMOTE I/O
SUBSURFACE VENTILATION CONTROL SYSTEM
ALLEN-BRADLEY SLC 500
TUNNEL BORING MACHINE (TBM)
ALLEN-BRADLEY PLC-5
REMOTE I/O
ELECTRICAL LOAD/ENERGY DATA MONITORING SYSTEM
DESIGN INPUTS
FOR DRAWING INDEX SEE DRAWING 39001
* SUPPLIED BY CONTROL SYSTEM INTEGRATOR
U.S. DEPARTMENT OF ENERGY
EXPLORATORY STUDIES FACILITY PACKAGE 29
CONTROL & MONITORING SYS
BLOCK DIAGRAM
PRELIMINARY

INSTRUMENT SYMBOLS

- INSTRUMENT ABBREVIATIONS
- TAG IDENTIFICATION
- LOCALLY MOUNTED
- MOUNTED ON CONTROL PANEL
- MOUNTED ON LOCAL PANEL
- MOUNTED BEHIND CONTROL PANEL
- MOUNTED BEHIND LOCAL PANEL
- DISTRIBUTED CONTROL SYSTEM (DCS) SHARED DISPLAY FIELD MOUNTED
- DISTRIBUTED CONTROL SYSTEM (DCS) SHARED DISPLAY CONTROL PANEL MOUNTED
- DISTRIBUTED CONTROL SYSTEM (DCS) SHARED DISPLAY LOCAL PANEL MOUNTED
- PLC FUNCTION INTEGRAL TO DCS
- INTERLOCK LOGIC
- I/O SIGNAL
  - DI = DISCRETE INPUT
  - DO = DISCRETE OUTPUT
  - AI = ANALOG INPUT
  - AO = ANALOG OUTPUT WITH I/O #
- EMERGENCY PULL CORD
- PLC — PROGRAMMABLE LOGIC CONTROLLER
- FOR PROJECTED INSTRUMENTATION
- HARDWIRED COMPLEX INTERCONNECTING LOGIC OR SEQUENCE CONTROL

GENERAL ABBREVIATIONS

AG	-ABOVE GROUND
ATM	-ATMOSPHERE
BR	-BLOWDOWN
BA	-BATTERY LIMITS
C	-CONN.(CLOSE-COUPLED)
CH	-CALCIO VALVE
CO	-CARBON MONOXIDE
CSC	-CAN SEAL CLOSE
CSO	-CAN SEAL OPEN
CV	-CONE VALVE
CL	-CHLORIDE CALCIUM
CP	-CHEMICAL PROPRIETARY
DPI	-DIMENSIONED
FC	-FAIL CLOSE
FD	-FLAT-DISC VALVE
FI	-FAIL INDETERMINATE
FL	-FAIL LOCKED
FO	-FAIL OPEN
FGH	-FOREGROUND
FP	-FULL PORT
FPWP	-FURNISHED & PIPED
GO	-GEAR OPERATED
GPM	-GALLONS/MINUTE
HOA	-HAND-OFF-AUTOMATIC
HP	-HIGH POWER-HIGH PRESS.
HPT	-HIGH POINT
IAS	-INSTRUMENT AIR SUPPLY
IN	-INSULATION MECHANICAL
IC	-INSULATION COLD
IH	-INSULATION HOT
IS	-INSULATION SAFETY
IWP	-INSULATION WRAPS-PAN
JOS	-JOG
KPA	-KILOPASCALS
LV	-LIMITS
LC	-LOCK CLOSE
LO	-LOW
LP	-LIGHTING PANEL
LPT	-LOW POINT
L/R	-LOCAL REMOTE
OALP	-OBSTRUCTION/ALARM
OD	-OUTSIDE
MM	-MILLIMETERS
NC	-NORMALLY CLOSED
NO	-NORMALLY OPEN OR NUMBER
O	-OILY WATER DRAIN
OPG	-OPAQUE VALVE
OV	-OPERATING VALVE
PO	-PUMP OUT
PSI	-POUNDS INCH
REV	-REVERSE
S	-STEAM WATER DRAIN
SC	-SAMPLE CONNECTION
SO	-STEAM OUT
SP	-SPARE OR SPACE
SP.GR.	-SPECIFIC GRAVITY
SV	-SAFT SEAT VALVE
S-S	-START-STOP
SP	-SET POINT
TS	-TERMINAL SPRING SEAL OR TEMPERATURE SENSING
TOP	-TOPSIDE DRAIN
T/T	-TANGENT TO TANGENT
UG	-UNDERGROUND
VB	-VACUUM BREAKER

PILOT LIGHT

- PILOT LIGHT LOCALLY MOUNTED
- PILOT LIGHT MOUNTED ON CONTROL PANEL
- PILOT LIGHT MOUNTED ON LOCAL PANEL

COLOR
- A - AMBER
- G - GREEN
- R - RED
- W - WHITE

INSTRUMENT SYMBOL ABBREVIATIONS

AA	-ANALYZER ALARM
AAL OR H	-ANALYZER ALARM LOW, HIGH
AF	-MALFUNCTION ALARM
AAF	-ANALYZER MALFUNCTION ALARM
AE	-ANALYZER ELEMENT
AI	-ANALYZER INDICATOR
AIT	-ANALYZER INDICATING TRANSMITTER
FAL	-LOW FLOW ALARM
FE	-FLOW ELEMENT
FFIC	-FLOW RATIO INDICATING CONTROLLER
FI	-FLOW INDICATOR
FIT	-FLOW INDICATING TRANSMITTER
FQI	-FLOW TOTALIZING INDICATOR
FV	-FLOW VALVE
FT	-FLOW TRANSMITTER
FY	-SOLENOID
HC	-HAND CONTROL
HS	-HAND SWITCH
HSE	-HAND SWITCH, SAFETY (EMERGENCY PULL CORD)
HSEA	-EMERGENCY PULL CORD ALARM
HSEI	-EMERGENCY PULL CORD STATUS INDICATOR
JA	-LOSS OF POWER ALARM
JI	-POWER INDICATOR
JS	-POWER SWITCH
LAH OR L	-LEVEL ALARM HIGH OR LOW
LI	-LEVEL INDICATOR
LE	-LEVEL SENSOR
LI	-LEVEL INDICATOR
LIT	-LEVEL INDICATING TRANSMITTER
LSH OR L	-LEVEL SWITCH, HIGH OR LOW (PLUGGED CHUTE)
LSHH OR LL	-LEVEL SWITCH, HIGH HIGH OR LOW LOW
LT	-LEVEL TRANSMITTER
PAH OR L	-PRESSURE ALARM HIGH OR LOW
PCV	-PRESSURE REGULATOR
PDA	-PRESSURE DIFFERENTIAL ALARM
PDI	-PRESSURE DIFFERENTIAL INDICATOR
PDIT	-PRESSURE DIFFERENTIAL INDICATING TRANSMITTER
PI	-PRESSURE GAUGE
PSH OR L	-PRESSURE SWITCH, HIGH OR LOW
PSHH OR LL	-PRESSURE SWITCH, HIGH HIGH OR LOW LOW
SC	-SPEED CONTROLLER
SE	-SPEED SENSOR
SI	-SPEED INDICATOR
SS	-SPEED SWITCH
ST	-SPEED TRANSMITTER
TAH	-TEMPERATURE ALARM HIGH
TI	-TEMPERATURE INDICATOR
TIT	-TEMPERATURE INDICATING TRANSMITTER
TSH OR L	-TEMPERATURE SWITCH, HIGH OR LOW
TSHH OR LL	-TEMPERATURE SWITCH, HIGH HIGH OR LOW LOW
TT	-TEMPERATURE TRANSMITTER
VI	-VIBRATION INDICATOR
VSH	-HIGH VIBRATION SWITCH
HA	-HEIGHT ALARM
HE	-HEIGHT ELEMENT
HI	-HEIGHT INDICATOR
HQI	-HEIGHT TOTALIZING INDICATOR
HIT	-HEIGHT INDICATOR TRANSMITTER
HT	-HEIGHT TRANSMITTER
HA	-COMMON ALARM
HC	-CONDITIONED CONTROLLER
HI	-COMMON INDICATOR
YA	-EVENT ALARM
YS	-PRESENCE SWITCH
YI	-STATUS OR EVENT INDICATOR
ZA	-LIMIT OR POSITION ALARM
ZI	-LIMIT OR POSITION INDICATOR
ZS	-LIMIT SWITCH

LINE AND PIPING SYMBOL IDENTIFICATION

- PROCESS INSTRUMENT LINE
- INSTRUMENT AIR LINE
- INSTRUMENT ELECTRICAL SIGNAL
- INSTRUMENT CAPILLARY TUBING
- HYDRAULIC SIGNAL
- ELECTROMAGNETIC SONIC SIGNAL OR LIGHT BEAM
- HEAT TRACED LINE - ELECTRICAL
- UNDERGROUND LINE
- UTILITY LINE
- PROCESS LINE
- DUCT
- COMMUNICATION OR INSTRUMENT SOFTWARE LINE
- INSULATED AND HEAT TRACED LINE
- PENDENT SPRINKLER OR DROP NIPPLE

INSTRUMENT TAG IDENTIFICATION

XXXX - XXXXX
- SEQUENCE
- AREA
- INSTRUMENT ABBREVIATION

AREA
- 1 - DUMP ACT CONVEYORS
- 2 - DUMPING ACT CONVEYORS
- 3 - FOCUS INJECTION SYSTEM
- 4 - VENTILATION SYSTEM
- 5 - SUBSURFACE SAFETY MONITORING SYSTEM
- 6 - FIRE DETECTION AND SUPPRESSION SYSTEM
- 7 - OTHER COMMUNICATIONS AND CONTROLS
- 8 - UTILITIES

CONTROL VALVES

- PNEUMATIC DIAPHRAGM ACTUATED VALVE
- REGULATOR SELF-CONTAINED
- REGULATOR WITH EXTERNAL PRESSURE TAP
- THREE WAY SOLENOID VALVE WITH RESET
- PRESSURE-BALANCED DIAPHRAGM ACTUATED
- ISOLATION VALVE WITH SAMPLER SWITCH
- GATE OR GLOBE CONTROL VALVE (SEE ABBREVIATIONS FOR VALVE ACTION)
- INSTRUMENT TO PNEUMATIC
- SOLENOID OPERATED CONTROL VALVE
- ROTARY ACTUATED
- CONTROL VALVE WITH HAND WHEEL
- SOLENOID VALVE
- HAND WHEEL

MANUALLY OPERATED VALVES

NOTE: BY ADDING AN ACTUATOR TO BASIC VALVE SYMBOL, VALVE BECOMES A CONTROL VALVE.

- GATE VALVE (SEE NOTE 4)
- GLOBE VALVE (SEE NOTE 4)
- CHECK VALVE
- PLUG VALVE
- HAND CONTROL VALVE
- BALL VALVE (SEE NOTE 4)
- BUTTERFLY VALVE OR DAMPER (SEE NOTE 4)
- STOP CHECK VALVE
- BLOWDOWN VALVE
- DIAPHRAGM VALVE (SEE NOTE 4)
- ANGLE VALVE (SEE NOTE 4)
- THREE WAY VALVE (SEE NOTE 4)
- FOUR WAY VALVE (SEE NOTE 4)
- INSULATED VALVE BODY
- NEEDLE VALVE
- VALVE WITH BLEED OR PLUGGED CONNECTION BLANK DISC

4 OTHER VALVES: INDICATE PROPER ABBREVIATION UNDER VALVE. EXAMPLE:

- TIGHT SHUTOFF (SEE ABBREVIATIONS FOR DETAILS)

PIPELINE MATERIAL ABBREVIATIONS

CS	CARBON STEEL
SS	STAINLESS STEEL
FRP	FIBERGLASS REINFORCED PIPE
FRH	FLEXIBLE RUBBER HOSE
TLS	TEFLON LINED HOSE W/STAINLESS STEEL BRAID
HDPE	HIGH DENSITY POLYETHYLENE (FUSED JOINTS)
PVC	POLYVINYL CHLORIDE
PVCP	SCHDR PLASTIC PIPE & FITTINGS
HASTO	HASTELLOY ALLOY (to 0.5 C AS REQUIRED)
PLH	POLYETHYLENE LINED HOSE

NOTES:

1. [illegible] RECOMMENDED SELF-DEFINING CHEMICAL SYMBOLS SUCH AS CSC, [illegible], ETC. MAY BE USED IN CONJUNCTION WITH ANALYSIS INSTRUMENTS. SUCH SYMBOLS WILL BE PLACED OUTSIDE THE INSTRUMENT BALLOON.
2. THE LETTERS P (PRESSURE) & D (DIFFERENTIAL) MAY BE USED AS MODIFIERS WITH AN APPROPRIATE FIRST LETTER, TO DEFINE MORE FUNCTIONAL ASPECTS OF THE SYSTEM. FOR EXAMPLE: FIC - FLOW RATIO INDICATING CONTROLLER AND PDSH - PRESSURE DIFFERENTIAL SWITCH HIGH.

MISCELLANEOUS

- SERO ____ PSI — PRESSURE SAFETY/RELIEF VALVE
- SERO ____ PSI — VACUUM SAFETY/RELIEF VALVE
- SERO ____ PSI — RUPTURE DISC (PRESSURE)
- SERO ____ PSI — RUPTURE DISC (VACUUM)
- HOSE CONNECTION
- CONNECTION TYPE AND SIZE SHOWN THE-IN NUMBER
- VORTEX SENSOR
- LINE REDUCTION
- REMOTE STARTING ALARM BUTTON
- POSITIVE DISPLACEMENT TYPE FLOWMETER
- VANEAXIAL FAN
- 2 TO RECEIVER
- TRANSMITTER OR TRANSDUCER (FOR EXAMPLE, TO DETECT PRESSURE, ETC. PRIMARY FLOW ELEMENT INTEGRAL WITH TRANSMITTER
- ORIFICE PLATE WITH FLANGE OR CORNER TAPS
- POSITIVE DISPLACEMENT TYPE FLOW INDICATOR
- ROTAMETER TYPE FLOW INDICATOR
- MAGNETIC FLOWMETER
- VENTURI TUBE OR FLOW NOZZLE
- TURBINE OR PROPELLER TYPE PRIMARY ELEMENT
- ORIFICE PLATE IN QUICK CHANGE FITTING
- PITOT TUBE OR PITOT-VENTURI TUBE
- Y-TYPE STRAINER
- FLOW NOZZLE
- MOTOR
- AIR DUCT SECTION FLOW ELEMENT
- POLE WITH GUYS AND ANCHOR

DESIGN INPUTS
DEF BASIS FOR DESIGN
DOCUMENT NO
BA00000-01111-6300-00002 REV 02
SECTION 3.1.1

FOR DRAWING INDEX SEE DRAWING 39001

NOTICE OF DESIGN CHANGE
DOCUMENTS
TYPICAL

DESIGN CHANGE	DRAWING	REV	DATE	CHANGE

REV	DESCRIPTION	DATE	BY	CHK	ENG	PROJ	OPS	QA	SAFETY	CONSTR	PROC	PROJ MGR
00	ISSUED FOR DOE REVIEW	1-8-94	CLG									
01	ISSUED FOR DOE REVIEW	4-10-94	CLG									

DRAWN: R. BINDER; L. FERNANDEZ; D. GRAHAM; R. REED; P. DAVIS

U.S. DEPARTMENT OF ENERGY
Yucca Mountain Site Characterization Project
M&O Management & Operating Contractor
EXPLORATORY STUDIES FACILITY PACKAGE 28
SUBSURFACE
ELECTRICAL NOTES & LEGEND
P & ID

REV	SCALE	CONTRACT NUMBER	SHEET	DRAWING NUMBER
0	NONE	BA00000-01111-2100-43000-00	1 of 1	ELECS143000.02

PRELIMINARY

USE/FOR ACCEPTANCE FOR CONSTRUCTION
By _____ Date _____

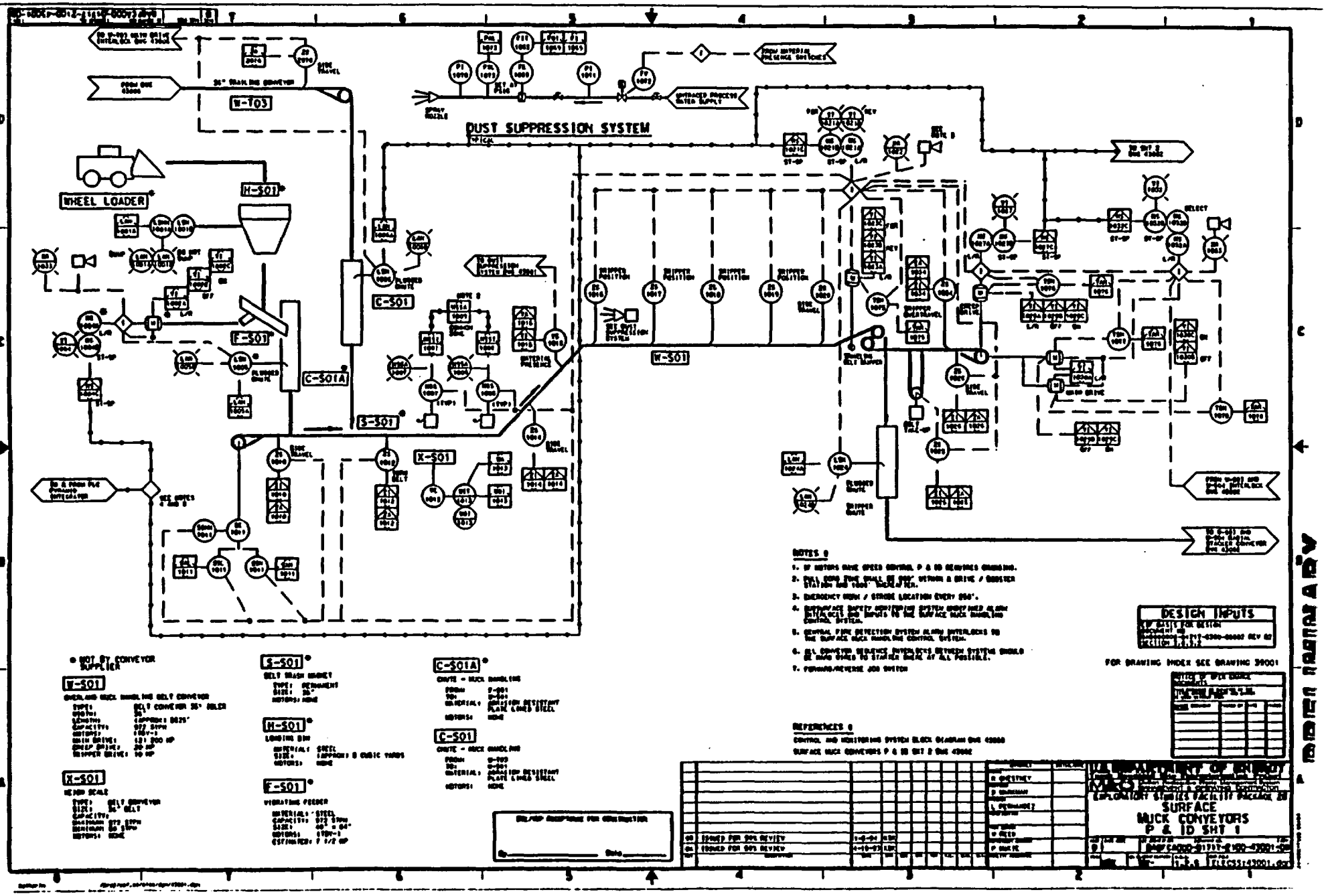
DUST SUPPRESSION SYSTEM
WHEEL LOADER
W-T03
H-S01
F-S01
C-S01
C-S01A
S-S01
X-S01
W-S01
NOTES 0
DESIGN INPUTS
FOR DRAWING INDEX SEE DRAWING 39001
REFERENCES 0
S-S01
H-S01
F-S01
C-S01A
C-S01
EXPLORATORY STUDIES FACILITY PACKAGE 2B
SURFACE
MUCK CONVEYORS
P & ID SHT 1

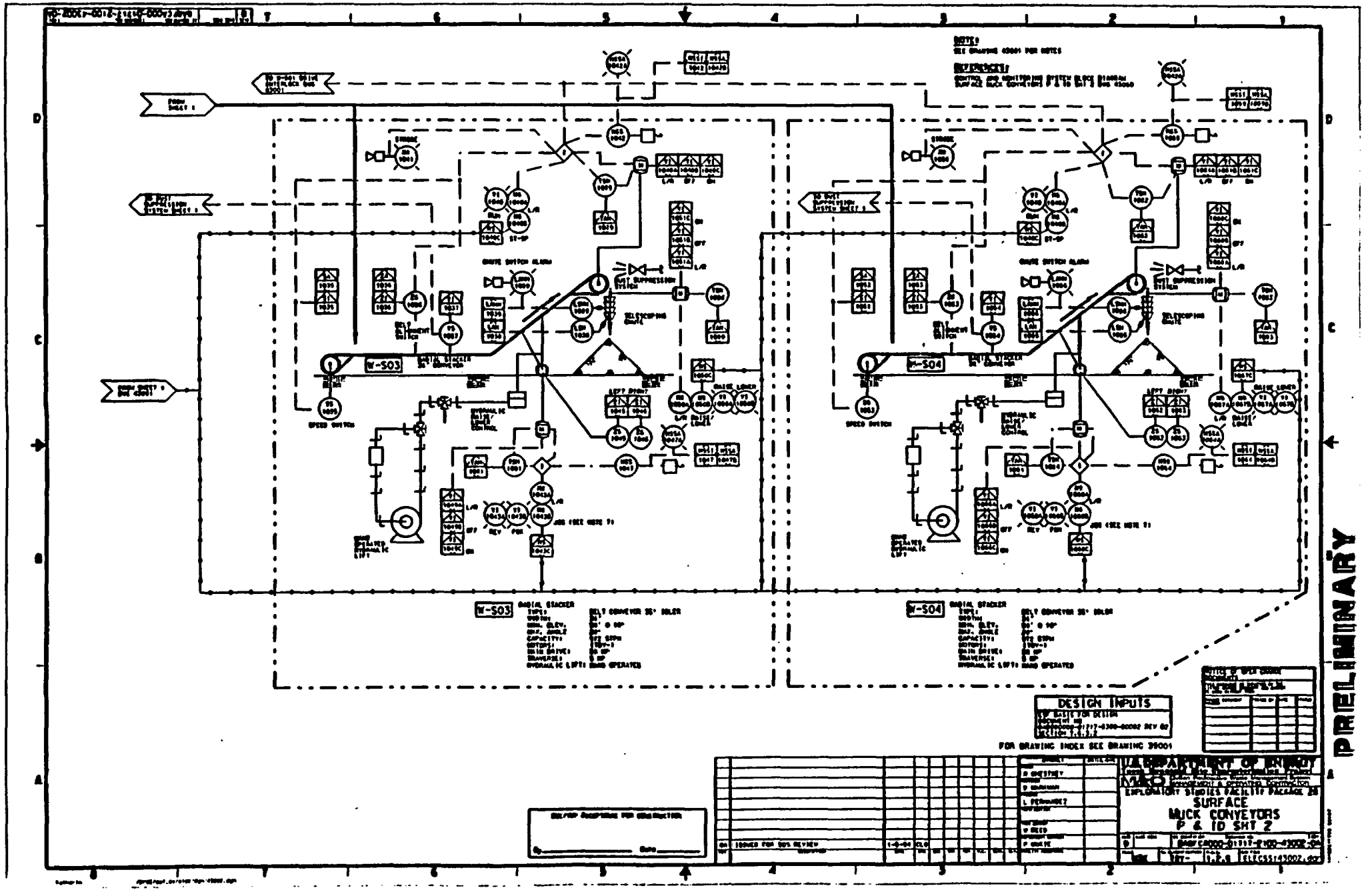
W-S03
W-S04
DESIGN INPUTS
FOR DRAWING INDEX SEE DRAWING 39001
U.S. DEPARTMENT OF ENERGY
MRS
EXPLORATORY STUDIES FACILITY PACKAGE 28
SURFACE
MUCK CONVEYORS
P & ID SHT 2
PRELIMINARY

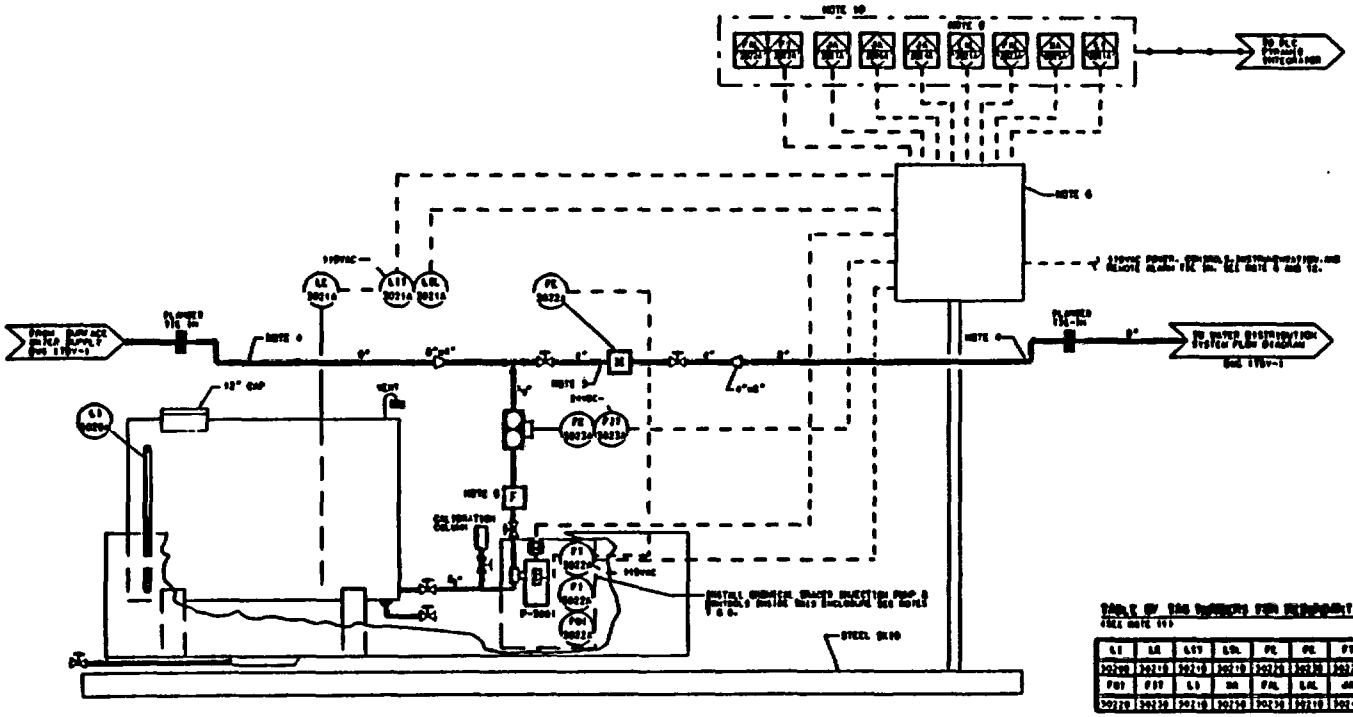

P-3001 TRACER METERING PUMP

FLOW CAPACITY: 0.012 TO 5.0 GPH

NOTES:

1. [illegible]
2. [illegible]
3. [illegible]
4. [illegible]
5. [illegible]
6. [illegible]
7. [illegible]
8. [illegible]
9. [illegible]
10. [illegible]
11. [illegible]
12. [illegible]

REFERENCES:

SPECIFICATION SECTION [illegible]

CONTROL AND MONITORING SYSTEM AND BLOCK DIAGRAM DWG [illegible]

FIRE PROTECTION CONTROLS P & ID DWGS [illegible] & [illegible].

TABLE OF SIGNALS FOR ENCLOSURE [illegible]

LI	LA	LLIT	LSL	PI	PA	FI	FA
[illegible]	[illegible]	[illegible]	[illegible]	[illegible]	[illegible]	[illegible]	[illegible]
FQI	FIT	LI	SA	FAL	LAL	AA	AA
[illegible]	[illegible]	[illegible]	[illegible]	[illegible]	[illegible]	[illegible]	[illegible]

DESIGN INPUTS

[illegible]

FOR DRAWING INDEX SEE DRAWING 39001

PRELIMINARY

[illegible]	ISSUED FOR DOE REVIEW	[illegible]	[illegible]
[illegible]	ISSUED FOR DOE REVIEW	[illegible]	[illegible]

U.S. DEPARTMENT OF ENERGY

MOAB

EXPLORATORY STUDIES FACILITY PACKAGE 25

CONSTRUCTION PROCESS AND FIREWATER CHEMICAL TRACER INJECTION P & ID

NOTES:

1. FOR LEGEND, SYMBOLS & ADDITIONAL NOTES SEE DRAWING 43000.
2. TYPICAL TUNNEL GAS ANALYZER STATION. SEE GAS ANALYZER STATION PANEL FOR INSTRUMENTATION TAG NUMBERS. GAS ANALYZERS MONITOR TUNNEL ENVIRONMENT CONDITIONS.
3. AT EACH BOOSTER FAN LOCATION THERE WILL BE A TUNNEL GAS ANALYZER STATION.
4. THE AN TAG IS A DENSOR/TRANSMITTER MALFUNCTION ALARM
5. THE PC BASED MONITORING SYSTEM FOR SAFETY MEASURING THE VENTILATE AIR IS A SEPARATE AND FULLY INDEPENDENT FROM THE VENTILATION MONITORING SYSTEM. THIS WILL MEET THE REQUIREMENTS OF YUCCA MOUNTAIN SITE CHARACTERIZATION PROJECT DOCUMENT NO. YMP/CM-0019, EXPLORATORY STUDY FACILITY DESIGN REQUIREMENTS.
6. 'XXXXX' DENOTES DAS NUMBER IN TABLES. SEE DWG 43005.

REFERENCES:

SUBSURFACE LIFE SAFETY & MONITORING EQUIPMENT P & ID SHT 2 DWG 43005
CONTROL & MONITORING SYS BLOCK DIAG DWG 43000

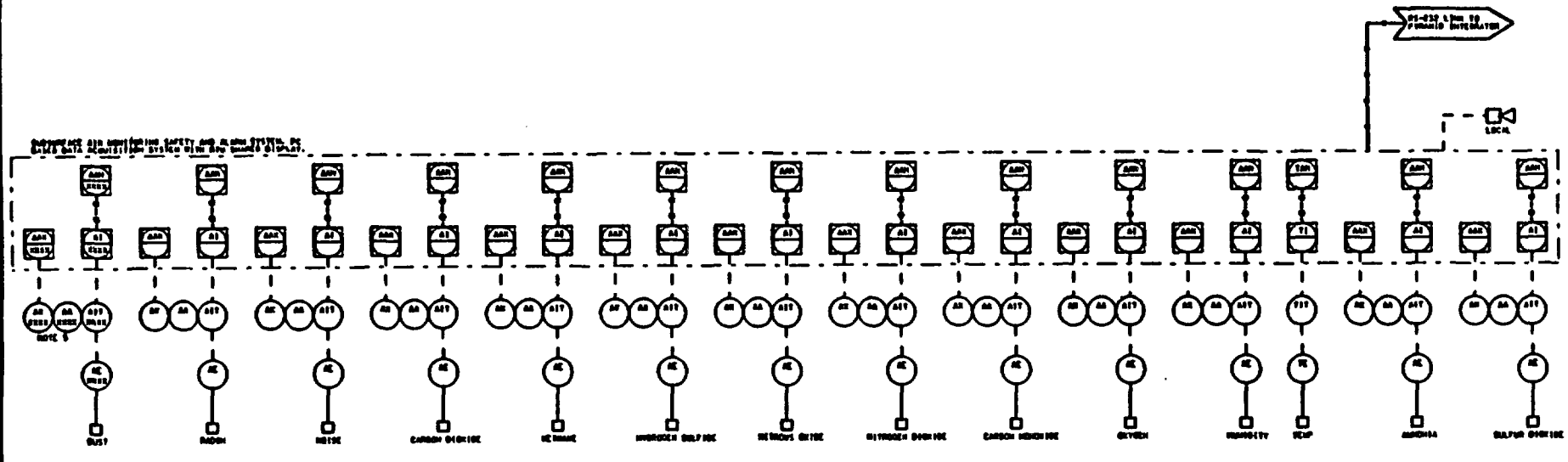

TUNNEL GAS ANALYZER STATION

FOR DRAWING INDEX SEE DRAWING 39001

DESIGN INPUTS

ISSUED FOR 60% REVIEW

U.S. DEPARTMENT OF ENERGY
YUCCA MOUNTAIN PROJECT
EXPLORATORY STUDIES FACILITY PACKAGE 3B
SUBSURFACE LIFE SAFETY & MONITORING EQUIPMENT P & ID SHT 1

PRELIMINARY

[illegible]

GAS ANALYZER STATION TABLE

TAG NUMBER(S) = '[illegible]'

STATION NO.	DUST						
	AE	AIT	AI	AAH	AS	AAL	AH
00+30.40 m	9001	9001	9001	9001	9001	9001	9001
05+18.16 m	9015	9015	9015	9015	9015	9015	9015
10+36.32 m	9029	9029	9029	9029	9029	9029	9029
15+54.48 m	9043	9043	9043	9043	9043	9043	9043
20+72.64 m	9057	9057	9057	9057	9057	9057	9057
25+90.80 m	9071	9071	9071	9071	9071	9071	9071
31+08.96 m	9085	9085	9085	9085	9085	9085	9085
36+27.12 m	9099	9099	9099	9099	9099	9099	9099
41+45.28 m	9113	9113	9113	9113	9113	9113	9113
46+63.44 m	9127	9127	9127	9127	9127	9127	9127
51+81.60 m	9141	9141	9141	9141	9141	9141	9141
56+99.76 m	9155	9155	9155	9155	9155	9155	9155
62+17.92 m	9169	9169	9169	9169	9169	9169	9169
67+36.08 m	9183	9183	9183	9183	9183	9183	9183
72+54.24 m	9197	9197	9197	9197	9197	9197	9197
	9211	9211	9211	9211	9211	9211	9211

STATION NO.	RADON						
	AE	AIT	AI	AAH	AS	AAL	AH
00+30.40 m	9002	9002	9002	9002	9002	9002	9002
05+18.16 m	9016	9016	9016	9016	9016	9016	9016
10+36.32 m	9030	9030	9030	9030	9030	9030	9030
15+54.48 m	9044	9044	9044	9044	9044	9044	9044
20+72.64 m	9058	9058	9058	9058	9058	9058	9058
25+90.80 m	9072	9072	9072	9072	9072	9072	9072
31+08.96 m	9086	9086	9086	9086	9086	9086	9086
36+27.12 m	9100	9100	9100	9100	9100	9100	9100
41+45.28 m	9114	9114	9114	9114	9114	9114	9114
46+63.44 m	9128	9128	9128	9128	9128	9128	9128
51+81.60 m	9142	9142	9142	9142	9142	9142	9142
56+99.76 m	9156	9156	9156	9156	9156	9156	9156
62+17.92 m	9170	9170	9170	9170	9170	9170	9170
67+36.08 m	9184	9184	9184	9184	9184	9184	9184
72+54.24 m	9198	9198	9198	9198	9198	9198	9198
	9212	9212	9212	9212	9212	9212	9212

STATION NO.	[illegible]						
	AE	AIT	AI	AAH	AS	AAL	AH
00+30.40 m	9003	9003	9003	9003	9003	9003	9003
05+18.16 m	9017	9017	9017	9017	9017	9017	9017
10+36.32 m	9031	9031	9031	9031	9031	9031	9031
15+54.48 m	9045	9045	9045	9045	9045	9045	9045
20+72.64 m	9059	9059	9059	9059	9059	9059	9059
25+90.80 m	9073	9073	9073	9073	9073	9073	9073
31+08.96 m	9087	9087	9087	9087	9087	9087	9087
36+27.12 m	9101	9101	9101	9101	9101	9101	9101
41+45.28 m	9115	9115	9115	9115	9115	9115	9115
46+63.44 m	9129	9129	9129	9129	9129	9129	9129
51+81.60 m	9143	9143	9143	9143	9143	9143	9143
56+99.76 m	9157	9157	9157	9157	9157	9157	9157
62+17.92 m	9171	9171	9171	9171	9171	9171	9171
67+36.08 m	9185	9185	9185	9185	9185	9185	9185
72+54.24 m	9199	9199	9199	9199	9199	9199	9199
	9213	9213	9213	9213	9213	9213	9213

STATION NO.	CARBON DIOXIDE						
	AE	AIT	AI	AAH	AS	AAL	AH
00+30.40 m	9004	9004	9004	9004	9004	9004	9004
05+18.16 m	9018	9018	9018	9018	9018	9018	9018
10+36.32 m	9032	9032	9032	9032	9032	9032	9032
15+54.48 m	9046	9046	9046	9046	9046	9046	9046
20+72.64 m	9060	9060	9060	9060	9060	9060	9060
25+90.80 m	9074	9074	9074	9074	9074	9074	9074
31+08.96 m	9088	9088	9088	9088	9088	9088	9088
36+27.12 m	9102	9102	9102	9102	9102	9102	9102
41+45.28 m	9116	9116	9116	9116	9116	9116	9116
46+63.44 m	9130	9130	9130	9130	9130	9130	9130
51+81.60 m	9144	9144	9144	9144	9144	9144	9144
56+99.76 m	9158	9158	9158	9158	9158	9158	9158
62+17.92 m	9172	9172	9172	9172	9172	9172	9172
67+36.08 m	9186	9186	9186	9186	9186	9186	9186
72+54.24 m	9200	9200	9200	9200	9200	9200	9200
	9214	9214	9214	9214	9214	9214	9214

STATION NO.	METHANE						
	AE	AIT	AI	AAH	AS	AAL	AH
00+30.40 m	9005	9005	9005	9005	9005	9005	9005
05+18.16 m	9019	9019	9019	9019	9019	9019	9019
10+36.32 m	9033	9033	9033	9033	9033	9033	9033
15+54.48 m	9047	9047	9047	9047	9047	9047	9047
20+72.64 m	9061	9061	9061	9061	9061	9061	9061
25+90.80 m	9075	9075	9075	9075	9075	9075	9075
31+08.96 m	9089	9089	9089	9089	9089	9089	9089
36+27.12 m	9103	9103	9103	9103	9103	9103	9103
41+45.28 m	9117	9117	9117	9117	9117	9117	9117
46+63.44 m	9131	9131	9131	9131	9131	9131	9131
51+81.60 m	9145	9145	9145	9145	9145	9145	9145
56+99.76 m	9159	9159	9159	9159	9159	9159	9159
62+17.92 m	9173	9173	9173	9173	9173	9173	9173
67+36.08 m	9187	9187	9187	9187	9187	9187	9187
72+54.24 m	9201	9201	9201	9201	9201	9201	9201
	9215	9215	9215	9215	9215	9215	9215

STATION NO.	HYDROGEN SULFIDE						
	AE	AIT	AI	AAH	AS	AAL	AH
00+30.40 m	9006	9006	9006	9006	9006	9006	9006
05+18.16 m	9020	9020	9020	9020	9020	9020	9020
10+36.32 m	9034	9034	9034	9034	9034	9034	9034
15+54.48 m	9048	9048	9048	9048	9048	9048	9048
20+72.64 m	9062	9062	9062	9062	9062	9062	9062
25+90.80 m	9076	9076	9076	9076	9076	9076	9076
31+08.96 m	9090	9090	9090	9090	9090	9090	9090
36+27.12 m	9104	9104	9104	9104	9104	9104	9104
41+45.28 m	9118	9118	9118	9118	9118	9118	9118
46+63.44 m	9132	9132	9132	9132	9132	9132	9132
51+81.60 m	9146	9146	9146	9146	9146	9146	9146
56+99.76 m	9160	9160	9160	9160	9160	9160	9160
62+17.92 m	9174	9174	9174	9174	9174	9174	9174
67+36.08 m	9188	9188	9188	9188	9188	9188	9188
72+54.24 m	9202	9202	9202	9202	9202	9202	9202
	9216	9216	9216	9216	9216	9216	9216

GAS ANALYZER STATION TABLE

TAG NUMBER(S) = '[illegible]'

STATION NO.	NITROUS OXIDE						
	AE	AIT	AI	AAH	AS	AAL	AH
00+30.40 m	9007	9007	9007	9007	9007	9007	9007
05+18.16 m	9021	9021	9021	9021	9021	9021	9021
10+36.32 m	9035	9035	9035	9035	9035	9035	9035
15+54.48 m	9049	9049	9049	9049	9049	9049	9049
20+72.64 m	9063	9063	9063	9063	9063	9063	9063
25+90.80 m	9077	9077	9077	9077	9077	9077	9077
31+08.96 m	9091	9091	9091	9091	9091	9091	9091
36+27.12 m	9105	9105	9105	9105	9105	9105	9105
41+45.28 m	9119	9119	9119	9119	9119	9119	9119
46+63.44 m	9133	9133	9133	9133	9133	9133	9133
51+81.60 m	9147	9147	9147	9147	9147	9147	9147
56+99.76 m	9161	9161	9161	9161	9161	9161	9161
62+17.92 m	9175	9175	9175	9175	9175	9175	9175
67+36.08 m	9189	9189	9189	9189	9189	9189	9189
72+54.24 m	9203	9203	9203	9203	9203	9203	9203
	9217	9217	9217	9217	9217	9217	9217

STATION NO.	NITROGEN DIOXIDE						
	AE	AIT	AI	AAH	AS	AAL	AH
00+30.40 m	9008	9008	9008	9008	9008	9008	9008
05+18.16 m	9022	9022	9022	9022	9022	9022	9022
10+36.32 m	9036	9036	9036	9036	9036	9036	9036
15+54.48 m	9050	9050	9050	9050	9050	9050	9050
20+72.64 m	9064	9064	9064	9064	9064	9064	9064
25+90.80 m	9078	9078	9078	9078	9078	9078	9078
31+08.96 m	9092	9092	9092	9092	9092	9092	9092
36+27.12 m	9106	9106	9106	9106	9106	9106	9106
41+45.28 m	9120	9120	9120	9120	9120	9120	9120
46+63.44 m	9134	9134	9134	9134	9134	9134	9134
51+81.60 m	9148	9148	9148	9148	9148	9148	9148
56+99.76 m	9162	9162	9162	9162	9162	9162	9162
62+17.92 m	9176	9176	9176	9176	9176	9176	9176
67+36.08 m	9190	9190	9190	9190	9190	9190	9190
72+54.24 m	9204	9204	9204	9204	9204	9204	9204
	9218	9218	9218	9218	9218	9218	9218

STATION NO.	CARBON MONOXIDE						
	AE	AIT	AI	AAH	AS	AAL	AH
00+30.40 m	9009	9009	9009	9009	9009	9009	9009
05+18.16 m	9023	9023	9023	9023	9023	9023	9023
10+36.32 m	9037	9037	9037	9037	9037	9037	9037
15+54.48 m	9051	9051	9051	9051	9051	9051	9051
20+72.64 m	9065	9065	9065	9065	9065	9065	9065
25+90.80 m	9079	9079	9079	9079	9079	9079	9079
31+08.96 m	9093	9093	9093	9093	9093	9093	9093
36+27.12 m	9107	9107	9107	9107	9107	9107	9107
41+45.28 m	9121	9121	9121	9121	9121	9121	9121
46+63.44 m	9135	9135	9135	9135	9135	9135	9135
51+81.60 m	9149	9149	9149	9149	9149	9149	9149
56+99.76 m	9163	9163	9163	9163	9163	9163	9163
62+17.92 m	9177	9177	9177	9177	9177	9177	9177
67+36.08 m	9191	9191	9191	9191	9191	9191	9191
72+54.24 m	9205	9205	9205	9205	9205	9205	9205
	9219	9219	9219	9219	9219	9219	9219

STATION NO.	OXYGEN						
	AE	AIT	AI	AAH	AS	AAL	AH
00+30.40 m	9010	9010	9010	9010	9010	9010	9010
05+18.16 m	9024	9024	9024	9024	9024	9024	9024
10+36.32 m	9038	9038	9038	9038	9038	9038	9038
15+54.48 m	9052	9052	9052	9052	9052	9052	9052
20+72.64 m	9066	9066	9066	9066	9066	9066	9066
25+90.80 m	9080	9080	9080	9080	9080	9080	9080
31+08.96 m	9094	9094	9094	9094	9094	9094	9094
36+27.12 m	9108	9108	9108	9108	9108	9108	9108
41+45.28 m	9122	9122	9122	9122	9122	9122	9122
46+63.44 m	9136	9136	9136	9136	9136	9136	9136
51+81.60 m	9150	9150	9150	9150	9150	9150	9150
56+99.76 m	9164	9164	9164	9164	9164	9164	9164
62+17.92 m	9178	9178	9178	9178	9178	9178	9178
67+36.08 m	9192	9192	9192	9192	9192	9192	9192
72+54.24 m	9206	9206	9206	9206	9206	9206	9206
	9220	9220	9220	9220	9220	9220	9220

STATION NO.	HUMIDITY						
	AE	AIT	AI	AAH	AS	AAL	AH
00+30.40 m	9011	9011	9011	9011	9011	9011	9011
05+18.16 m	9025	9025	9025	9025	9025	9025	9025
10+36.32 m	9039	9039	9039	9039	9039	9039	9039
15+54.48 m	9053	9053	9053	9053	9053	9053	9053
20+72.64 m	9067	9067	9067	9067	9067	9067	9067
25+90.80 m	9081	9081	9081	9081	9081	9081	9081
31+08.96 m	9095	9095	9095	9095	9095	9095	9095
36+27.12 m	9109	9109	9109	9109	9109	9109	9109
41+45.28 m	9123	9123	9123	9123	9123	9123	9123
46+63.44 m	9137	9137	9137	9137	9137	9137	9137
51+81.60 m	9151	9151	9151	9151	9151	9151	9151
56+99.76 m	9165	9165	9165	9165	9165	9165	9165
62+17.92 m	9179	9179	9179	9179	9179	9179	9179
67+36.08 m	9193	9193	9193	9193	9193	9193	9193
72+54.24 m	9207	9207	9207	9207	9207	9207	9207
	9221	9221	9221	9221	9221	9221	9221

STATION NO.	TEMP			
	TAH	TI	TIT	TE
00+30.40 m	9012	9012	9012	9012
05+18.16 m	9026	9026	9026	9026
10+36.32 m	9040	9040	9040	9040
15+54.48 m	9054	9054	9054	9054
20+72.64 m	9068	9068	9068	9068
25+90.80 m	9082	9082	9082	9082
31+08.96 m	9096	9096	9096	9096
36+27.12 m	9110	9110	9110	9110
41+45.28 m	9124	9124	9124	9124
46+63.44 m	9138	9138	9138	9138
51+81.60 m	9152	9152	9152	9152
56+99.76 m	9166	9166	9166	9166
62+17.92 m	9180	9180	9180	9180
67+36.08 m	9194	9194	9194	9194
72+54.24 m	9208	9208	9208	9208
	9222	9222	9222	9222

STATION NO.	AMMONIA						
	AE	AIT	AI	AAH	AS	AAL	AH
00+30.40 m	9013	9013	9013	9013	9013	9013	9013
05+18.16 m	9027	9027	9027	9027	9027	9027	9027
10+36.32 m	9041	9041	9041	9041	9041	9041	9041
15+54.48 m	9055	9055	9055	9055	9055	9055	9055
20+72.64 m	9069	9069	9069	9069	9069	9069	9069
25+90.80 m	9083	9083	9083	9083	9083	9083	9083
31+08.96 m	9097	9097	9097	9097	9097	9097	9097
36+27.12 m	9111	9111	9111	9111	9111	9111	9111
41+45.28 m	9125	9125	9125	9125	9125	9125	9125
46+63.44 m	9139	9139	9139	9139	9139	9139	9139
51+81.60 m	9153	9153	9153	9153	9153	9153	9153
56+99.76 m	9167	9167	9167	9167	9167	9167	9167
62+17.92 m	9181	9181	9181	9181	9181	9181	9181
67+36.08 m	9195	9195	9195	9195	9195	9195	9195
72+54.24 m	9209	9209	9209	9209	9209	9209	9209
	9223	9223	9223	9223	9223	9223	9223

GAS ANALYZER STATION TABLE

STATION NO.	TAG NUMBERS — NITROGEN DIOXIDE						
	AE	AIT	AI	AAH	AS	AAL	AH
00+30.40 m	9014	9014	9014	9014	9014	9014	9014
05+18.16 m	9028	9028	9028	9028	9028	9028	9028
10+36.32 m	9042	9042	9042	9042	9042	9042	9042
15+54.48 m	9056	9056	9056	9056	9056	9056	9056
20+72.64 m	9070	9070	9070	9070	9070	9070	9070
25+90.80 m	9084	9084	9084	9084	9084	9084	9084
31+08.96 m	9098	9098	9098	9098	9098	9098	9098
36+27.12 m	9112	9112	9112	9112	9112	9112	9112
41+45.28 m	9126	9126	9126	9126	9126	9126	9126
46+63.44 m	9140	9140	9140	9140	9140	9140	9140
51+81.60 m	9154	9154	9154	9154	9154	9154	9154
56+99.76 m	9168	9168	9168	9168	9168	9168	9168
62+17.92 m	9182	9182	9182	9182	9182	9182	9182
67+36.08 m	9196	9196	9196	9196	9196	9196	9196
72+54.24 m	9210	9210	9210	9210	9210	9210	9210
	9224	9224	9224	9224	9224	9224	9224

DESIGN INPUTS

[illegible] BASIS FOR DESIGN
DOCUMENT NO
[illegible]-01717-4300-00002 REV 00
SECTION 1.3.1.10

FOR DRAWING INDEX SEE DRAWING 39001

NOTES:

FOR LEGEND, SYMBOLS & ADDITIONAL NOTES SEE DRAWING 43000

REFERENCES:

SUBSURFACE LIFE SAFETY MONITORING EQUIPMENT P & ID SHT 1 DWG 43004
CONTROL & MONITORING SYS BLOCK DIAG DWG 43000

QA: QAP ASSIGNED FOR CONSTRUCTION

By__________ Date__________

0A	ISSUED FOR DOE REVIEW	1-6-94	RFC

K. GINDER
L. FERNANDEZ
[illegible]
D. REED
P. MALIK

U.S. DEPARTMENT OF ENERGY
[illegible]
M&O [illegible]
EXPLORATORY STUDIES FACILITY PACKAGE 2B

SUBSURFACE LIFE SAFETY MONITORING EQUIPMENT P & ID SHT 2

BABFAJ000-01717-2100-43005-0A

1.2.6 ELECSS143005.dgn

PRELIMINARY

hetherin /proj/esf.ee/elec/dgn/43005.dgn 14-DEC-1993 10:25

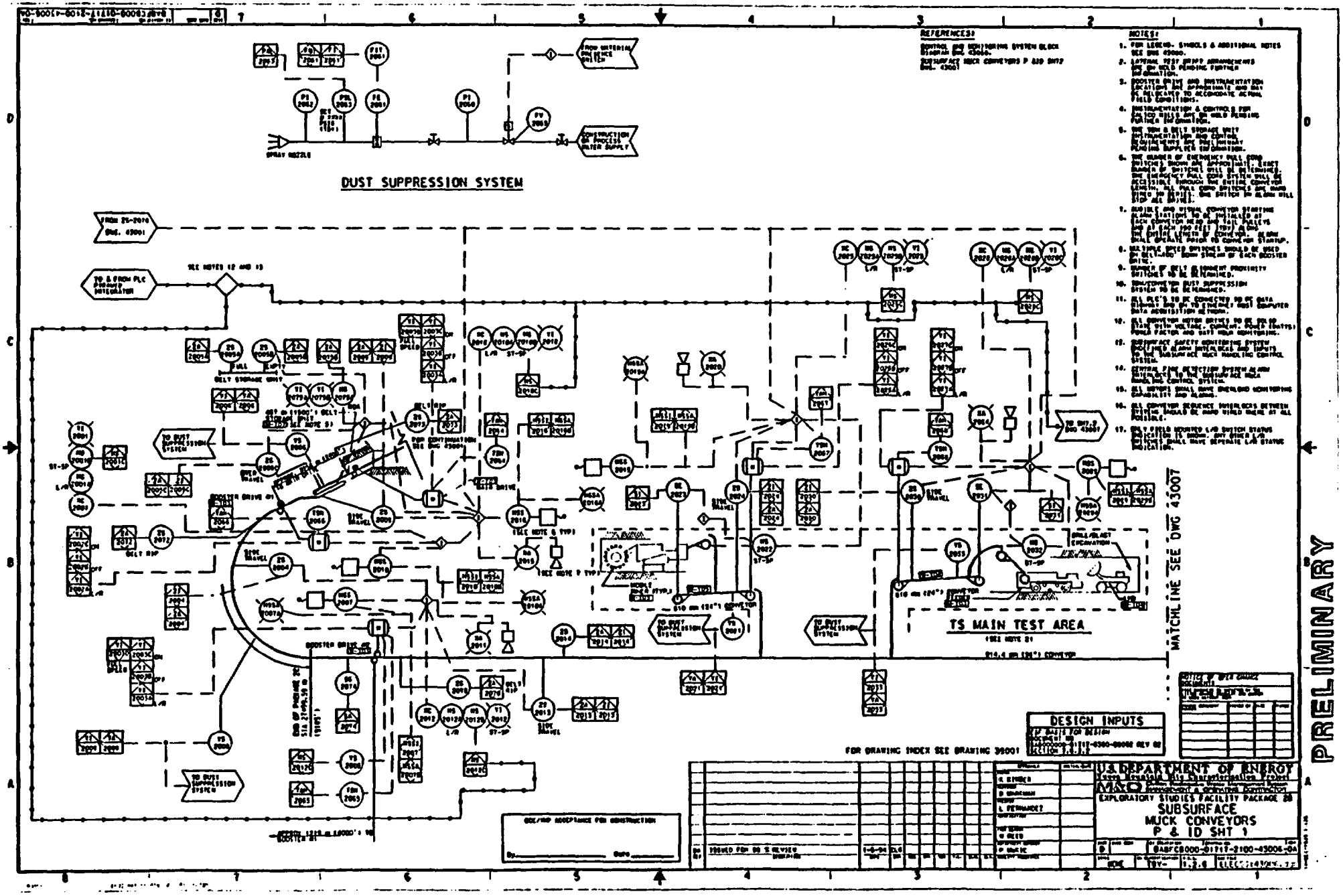
DUST SUPPRESSION SYSTEM
TS MAIN TEST AREA
MATCHLINE SEE DWG 43007
DESIGN INPUTS
FOR DRAWING INDEX SEE DRAWING 39001
U.S. DEPARTMENT OF ENERGY
EXPLORATORY STUDIES FACILITY PACKAGE 28
SUBSURFACE
MUCK CONVEYORS
P & ID SHT 1
PRELIMINARY

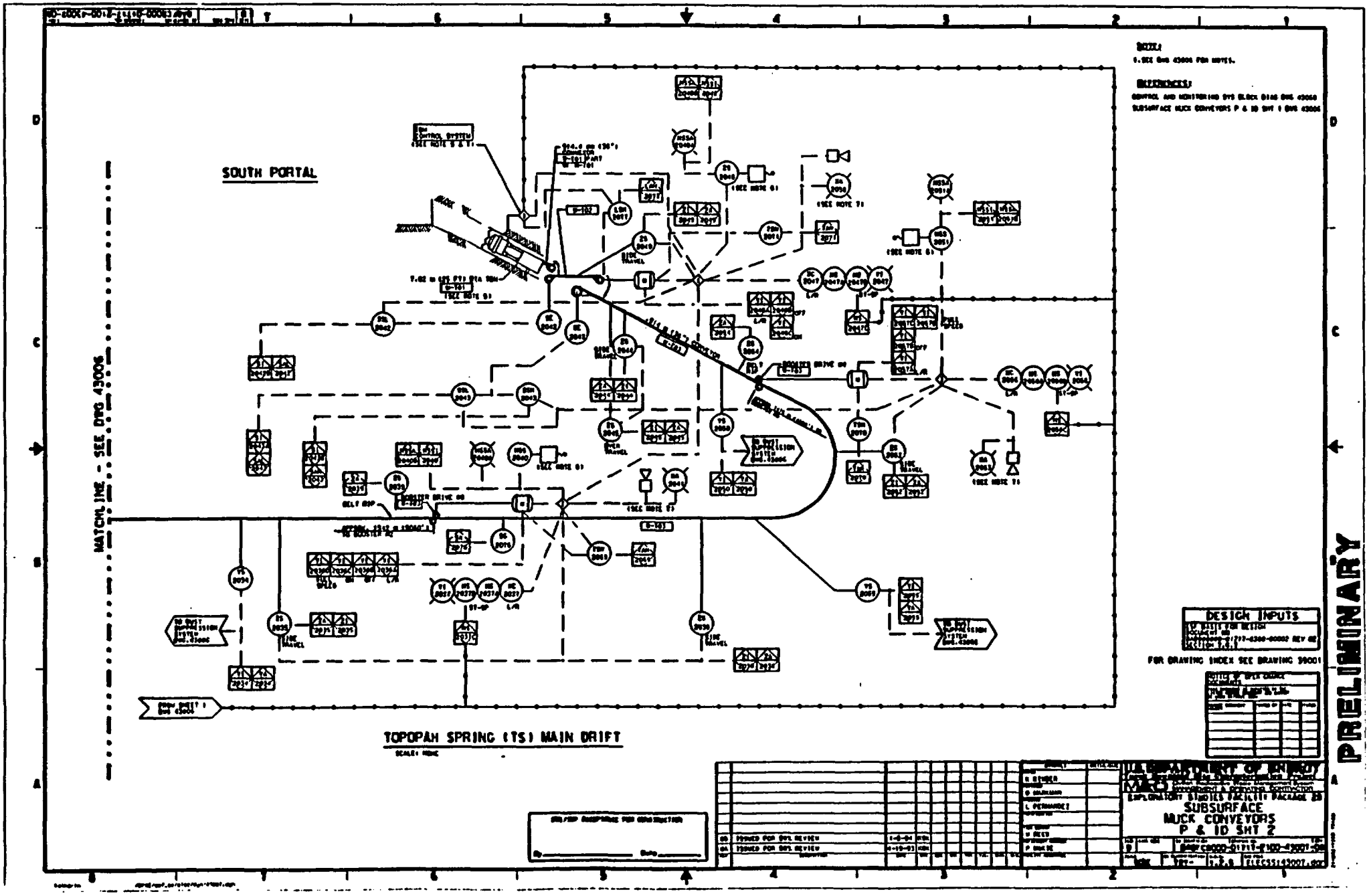
SOUTH PORTAL
MATCHLINE - SEE DWG 43006
TOPOPAH SPRING (TS) MAIN DRIFT
DESIGN INPUTS
FOR DRAWING INDEX SEE DRAWING 39001
PRELIMINARY
SUBSURFACE
MUCK CONVEYORS
P & ID SHT 2

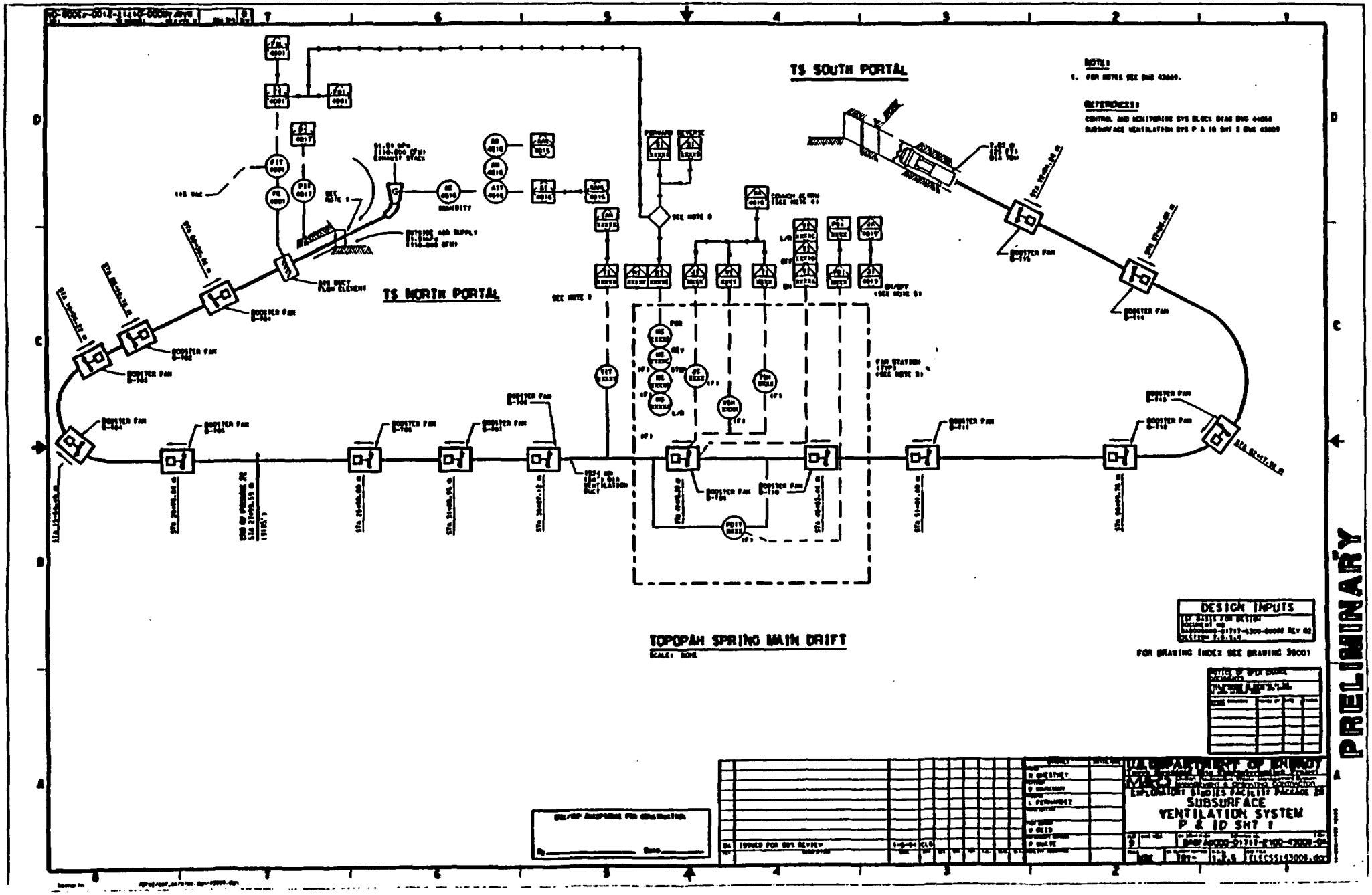
TS SOUTH PORTAL
TS NORTH PORTAL
TOPOPAH SPRING MAIN DRIFT
DESIGN INPUTS
PRELIMINARY
U.S. DEPARTMENT OF ENERGY
EXPLORATORY STUDIES FACILITY PACKAGE 2B
SUBSURFACE VENTILATION SYSTEM
P & ID SHT 1

VENTILATION FAN TABLE

Fan No.	P11	P21	P31	P41	P51	P61	P71	P81	P91	P101	P111	P121	P131	P141	P151	P161	P171	P181	P191	P201
0-701	0001	0001	0001	0001A	0001B	0001C	0001D	0001E	0001F	0001	0001	0001 / 0001	0001 / 0001	0001	0001A / 0001B	0001A / 0001C	0001A / 0001D			
0-702	0002	0002	0002	0002A	0002B	0002C	0002D	0002E	0002F	0002	0002	0002 / 0002	0002 / 0002	0002	0002A / 0002B	0002A / 0002C	0002A / 0002D			
0-703	0003	0003	0003	0003A	0003B	0003C	0003D	0003E	0003F	0003	0003	0003 / 0003	0003 / 0003	0003	0003A / 0003B	0003A / 0003C	0003A / 0003D			
0-704	0004	0004	0004	0004A	0004B	0004C	0004D	0004E	0004F	0004	0004	0004 / 0004	0004 / 0004	0004	0004A / 0004B	0004A / 0004C	0004A / 0004D			
0-705	0005	0005	0005	0005A	0005B	0005C	0005D	0005E	0005F	0005	0005	0005 / 0005	0005 / 0005	0005	0005A / 0005B	0005A / 0005C	0005A / 0005D			
0-706	0006	0006	0006	0006A	0006B	0006C	0006D	0006E	0006F	0006	0006	0006 / 0006	0006 / 0006	0006	0006A / 0006B	0006A / 0006C	0006A / 0006D			
0-707	0007	0007	0007	0007A	0007B	0007C	0007D	0007E	0007F	0007	0007	0007 / 0007	0007 / 0007	0007	0007A / 0007B	0007A / 0007C	0007A / 0007D			
0-708	0008	0008	0008	0008A	0008B	0008C	0008D	0008E	0008F	0008	0008	0008 / 0008	0008 / 0008	0008	0008A / 0008B	0008A / 0008C	0008A / 0008D			
0-709	0009	0009	0009	0009A	0009B	0009C	0009D	0009E	0009F	0009	0009	0009 / 0009	0009 / 0009	0009	0009A / 0009B	0009A / 0009C	0009A / 0009D			
0-7010	0010	0010	0010	0010A	0010B	0010C	0010D	0010E	0010F	0010	0010	0010 / 0010	0010 / 0010	0010	0010A / 0010B	0010A / 0010C	0010A / 0010D			
0-7011	0011	0011	0011	0011A	0011B	0011C	0011D	0011E	0011F	0011	0011	0011 / 0011	0011 / 0011	0011	0011A / 0011B	0011A / 0011C	0011A / 0011D			
0-7012	0012	0012	0012	0012A	0012B	0012C	0012D	0012E	0012F	0012	0012	0012 / 0012	0012 / 0012	0012	0012A / 0012B	0012A / 0012C	0012A / 0012D			
0-7013	0013	0013	0013	0013A	0013B	0013C	0013D	0013E	0013F	0013	0013	0013 / 0013	0013 / 0013	0013	0013A / 0013B	0013A / 0013C	0013A / 0013D			
0-7014	0014	0014	0014	0014A	0014B	0014C	0014D	0014E	0014F	0014	0014	0014 / 0014	0014 / 0014	0014	0014A / 0014B	0014A / 0014C	0014A / 0014D			
0-7015	0015	0015	0015	0015A	0015B	0015C	0015D	0015E	0015F	0015	0015	0015 / 0015	0015 / 0015	0015	0015A / 0015B	0015A / 0015C	0015A / 0015D			

NOTES:

1. VENTILATION SYSTEM BASED ON EXCAVATION OF 75 NORTH RAMP AND 75 SOUTH RAMP TO DATE.
2. FIRST FAN WILL BE PERMANENTLY INSTALLED AT 75 NORTH RAMP, AND REPLACED WITH PERMANENT SYSTEM BASED ON REQUIRED BY PROGRESS OF WORK.
3. TYPICAL FAN INSTRUMENTATION SHOWN TO ALL FANS. SHOWN ONE FAN (FAN ONLY FOR CLARITY). SEE VENTILATION FAN TABLE FOR SINGLE FAN STATIONS AND TAG NUMBERS.
4. THE COMMON ALARM INCLUDES THE FOLLOWING ALARM CONDITIONS:
   - FAN MOTOR HIGH TEMPERATURE
   - FAN MOTOR HIGH VIBRATION
   - FAN MOTOR POWER FAILURE
5. VENTILATION CONTROL SYSTEM POWER FAILURE INDICATION AND ALARM.
6. THE SUBSURFACE VENTILATION CONTROLS CONSIST OF REMOTE I/O PLC SYSTEM CONNECTED TO A DATA HIGHWAY NETWORK.
7. "XXXXX" DENOTES THE NUMBER TYPICAL FOR ALL THE BUNDLES.
8. SUBSURFACE VENTILATION PLC BASED CONTROL SYSTEM WITH DIRECT HARD WIRED LINKS FROM THE PROTECTION SYSTEM AND SURFACE AND SUBSURFACE CONNECTION SYSTEMS.

REFERENCES:

CONTROL AND MONITORING SYS BLOCK DIAGRAM DWG 43000
SUBSURFACE VENTILATION SYS P & ID SHT 1 DWG 43000

VENTILATION CONTROL SYSTEM:

A. THE VENTILATION CONTROLS AND INSTRUMENTATION SHALL BE DESIGNED BY THE SUBSURF. VENT. CONTROL AND MONITORING SYSTEM SHALL BE A PLC BASED SYSTEM. THE SYSTEM SHALL BE A STAND-ALONE SYSTEM. THE SYSTEM SHALL BE PLC BASED WITH REMOTE I/O UNITS. THE SYSTEM SHALL BE PLC-BASED AND SHALL INCORPORATE PLC SOFTWARE FOR ALL CONTROL FUNCTIONS.

B. THE VENTILATION CONTROLS SHALL STAND ALONE. ALSO HAVE REMOTE INTERCONNECTION TO THE DATA HIGHWAY. THE DATA HIGHWAY SHALL BE A PLC-BASED DATA HIGHWAY. THE DATA HIGHWAY SHALL BE USED FOR ALARM/STATUS INFORMATION AS WELL AS A CONTROL PLANT OPERATOR WORK STATION.

C. THE CONTROL SYSTEM SHALL BE SIZED TO CONTROL UP TO 20 FANS (20). THE SYSTEM SHALL BE FURNISHED WITH A MINIMUM WITH THE INSTRUMENTATION AS DEFINED ON THE PROJECT DRAWINGS.

D. THE FOLLOWING ADDITIONAL REQUIREMENTS AS A MINIMUM ARE:
   1. THE SYSTEM SHALL HAVE OPERATOR WORK STATIONS. SHALL BE CAPABLE OF RECEIVING ALL DATA FROM THE DATA HIGHWAY. THE OPERATOR WORK STATIONS SHALL BE PROVIDED WITH PASSWORD PROTECTED ACCESS TO THE OPERATIONAL SECURITY OF THE SUBSURFACE VENTILATION CONTROL SYSTEM.
   2. THE VENTILATION CONTROLS PLC COMMUNICATION TO THE DATA HIGHWAY PLC NETWORK SHALL BE SOCKET-PATCH.
   3. REMOTE I/O UNITS SHALL BE SUPPLIED TO PROVIDE ALL OF OPERATION FROM THE PLC CONTROLLER & STATUS & ALARM OF OPERATION WORK STATIONS.
   4. ALL MONITORING AND CONTROL COMPONENTS OF THE VENTILATION SYSTEM SHALL BE DESIGNED & INSTALLED. INSTRUMENTS SHALL BE SELECTED FROM EACH VENTILATION LOCATION TO THE PLC. THE PLC SHALL DATA COMMUNICATION TO BE EXTENDED THROUGHOUT THE ENTIRE VENTILATION SYSTEM.
   5. THE OPERATOR WORK STATIONS SHALL AS A MINIMUM INCLUDE THE FOLLOWING INTERFACE CAPABILITIES WITH THE PLC CONTROLS:
      A. ALL FAN DRIVES SHALL BE CONTROLLED FROM THE OPERATOR WORK STATIONS. EACH DRIVE SHALL HAVE A CONTROLLER LOCATED AT EACH LOCATION. A LOCAL/REMOTE SWITCH SHALL BE INSTALLED AS PART OF THE LOCAL CONTROLS FOR EACH DRIVE.
      B. ALL DRIVE LOCATION CONTROLS FAN TO SHALL BE DISPLAYED AT BOTH THE PRIMARY/SECONDARY WORK STATION AND LOCAL STATIONS. IN ADDITION, DRIVE FAULTS SHALL BE DISPLAYED LOCALLY ON INDIVIDUAL MESSAGE DISPLAYS.
      C. SHALL HAVE ABILITY TO START ALL DRIVE FANS REMOTELY FROM BOTH THE PRIMARY/SECONDARY WORK STATION AND LOCAL STATIONS.
      D. ADDITIONAL BOOSTER FAN SHALL AUTOMATICALLY BE DETECTED AND MONITORED AS THEY ARE INSTALLED IN THE SYSTEM.
      E. AN ACTIVITY LOG SHALL BE CONTINUOUSLY RECORDED BY THE OPERATOR WORK STATION AND ARCHIVED ON ETHERNET LONG DRIVES. THIS ACTIVITY LOG SHALL RECORD ALL OPERATIONS INCLUDING EQUIPMENT START-UP, DRIVE CHANGES, DRIVE FAULTS, EQUIPMENT SHUTDOWN, ETC.
      F. A DATA LOGGING PRINTER AT THE OPERATOR WORK STATION SHALL RECORD ALL SHUTDOWN TRIP OCCURRENCES AND FAULTS WITH TIME AND DATE STAMP.
      G. PRINTOUT OF VARIOUS PARAMETERS DATA OF DRIVE, MOTOR LOADING SHALL BE PROVIDED. THIS PRINTOUT OF OPERATION SHALL BE DISPLAYED ON THE CRT SCREEN AS WELL AS PRINTED TO DATA FOR EACH DRIVE.
   6. THE VENTILATION PLC SYSTEM SHALL INCLUDE AS A MINIMUM SIGNALS TO THE MINER CONTROL SYSTEM CONSISTING OF:
      A. EMERGENCY STOP SWITCH INDICATION
      B. MOTOR OVERLOAD RELAY TRIPPED STATUS INDICATION
      C. MOTOR BEARING TEMPERATURE SWITCH STATUS INDICATION
      D. LOCAL/REMOTE SWITCH POSITION STATUS INDICATION
      E. MOTOR RUNNING STATUS INDICATION, FORWARD AND REVERSE
      F. MOTOR/FAN VIBRATION STATUS INDICATION
      G. DIFFERENTIAL AIR FLOWING PRESSURE ACROSS EACH FAN
      H. FAN DIRECTION INDICATION
   7. SPARE I/O POINTS SHALL BE PROVIDED AND WIRED IN THE PLC CABINET FOR THE FOLLOWING TYPE DATA TYPES IN THE QUANTITIES OF EACH DATA TYPE USED:
      A. DIGITAL INPUT — 20 SPARE
      B. DIGITAL OUTPUT — 20 SPARE
      C. ANALOG INPUT — 20 SPARE
      D. ANALOG OUTPUT — 20 SPARE
   8. PROVIDE THE FOLLOWING CONDITIONS, INTERLOCKS WITHIN THE PLC LOGIC TO INSURE THE SAFE OPERATION AND FAN CONTROL SYSTEM. (ALL STATES WITH THE PLC STATUS SHALL BE SENT WITH ALL DATA HIGHWAY PLANT NETWORK.)
      A. DISCRETE OUTPUTS FROM VENTILATION PLC:
         1. VENTILATION SYSTEM READY TO START ON COMMAND STATUS.
         2. VENTILATION SYSTEM RUNNING IN FORWARD DIRECTION.
         3. VENTILATION SYSTEM RUNNING IN REVERSE DIRECTION.
         4. VENTILATION SYSTEM OPERATING MODE IN LOCAL.
         5. VENTILATION SYSTEM IN REMOTE.
      B. DISCRETE INPUTS TO VENTILATION PLC:
         1. VENTILATION SYSTEM FORWARD START. STAGE 1 (ALL FANS).
         2. VENTILATION SYSTEM FORWARD START STAGE 2 (SINGLE FAN).
         3. VENTILATION SYSTEM REVERSE START. (SINGLE).
   9. INFORMATION SHALL BE USED WITH VENTILATION CONTROL SYSTEM SHALL INCLUDE, BUT NOT LIMITED TO:
      A. LOGIC DIAGRAMS
      B. ELECTRIC SCHEMATIC DIAGRAMS
      C. WIRING DIAGRAMS
      D. INSTRUMENT DATA SHEETS
      E. INSTRUMENT LIST
      F. INSTRUMENT MOUNTING DETAILS
      G. PIPING AND INSTRUMENT DIAGRAMS (P & ID'S)
      H. PLC INPUT/OUTPUT LIST
      I. CONTROL CABINET LAYOUT AND REMOTE ARRANGEMENT DWG'S
      J. FULL SCALE OF PLC DIAGRAM ON ELECTRIC DISK
      K. HARD COPY OF PLC DIAGRAM
      L. PROPER OPERATION AND MAINTENANCE WITH MANUFACTURER'S DATA SHEETS FOR ALL COMPONENTS.

BOOSTER FAN PERFORMANCE

TYPICAL ALL FANS

FLOW RATE CFM (CMS)	TOTAL HPA (IWG)	MOTOR HP (KILOWATTS) *
51.91 (1110-0001)	0.70 (11.01)	100.43 (1000)

* DESIGN AIR DENSITY CONDITIONS

DESIGN INPUTS

TP BASIS FOR DESIGN
DRAWING NO
REFERENCE 01101-0300-00002 REV 02
SECTION 1.2.1.2

FOR DRAWING INDEX SEE DRAWING 39001

PRELIMINARY

0A	ISSUED FOR GDS REVIEW	1-6-94	CLG	
0	ISSUED FOR CONSTRUCTION	12-8-93	CLG	

P GRESTHEY
D SHARMAN
L FERNANDEZ
P REED
P SHAW

U.S. DEPARTMENT OF ENERGY
YUCCA MOUNTAIN PROJECT OFFICE
MACTEC Management & Operating Contractor
EXPLORATORY STUDIES FACILITY PACKAGE 2B

SUBSURFACE VENTILATION SYSTEM P & ID SHT 2

Drawing No. 1 Sheet 2 of 2 Rev 0A
Subject Code 1.2.1.2
Filename FLES2S1-43009.dgn
Scale NTS
Date 12-8-93

REFERENCES:

CONTROL AND MONITORING SYSTEM BLOCK DIAGRAM DWG 43060
SUBSURFACE FIRE PROTECTION P & ID SHT 2 DWG 43011

NOTES:

1. FOR LEGEND, SYMBOLS & ADDITIONAL NOTES SEE DRAWINGS 43000 & 44015.
2. EACH ANNUNCIATOR UNIT UP TO EIGHT (8) MINIMUM FIRE ZONES AND ONE (1) OPERATING SYSTEMS OR (8) (8) WALLS. EACH TEST ALCOVE INITIALLY (1) (1) CONSISTING OF A FIRE ZONE AND WILL HAVE ONE FOLLOWING MONITORING DEVICE (DETECTOR), HEAT DETECTOR, FIRE AND ALARM OPERATION STATION, MANUAL FIRE ALARM NOTIFICATION, AND RED STROBE ALARM LIGHT (TBV).
3. THE NUMBER OF ANNUNCIATORS DEPENDS ON THE SELECTED MANUFACTURERS EQUIPMENT ZONE CAPACITY.
4. STROBE ALARM OFF UNIT SYSTEM HARDWARE FAILURE. FIRE OR LOSS OF POWER.
5. FIRE ALARM NOTIFICATION, PULL STATIONS AND STROBES SHALL BE LOCATED EVERY 50 m (164') IN THE MAIN TUNNEL AREA AND IN EACH ALCOVE LOCATION.
6. BRANCH FAILURE OR LOSS OF POWER ALARM TO THE PLC DYNAMIC INTEGRATOR.
7. CENTRAL FIRE DETECTION SYSTEM CONTROLS COMMUNICATION TO THE PLC DYNAMIC INTEGRATOR.
8. A FIRE ZONE MONITOR UNIT SHALL BE LOCATED AT EACH TEST ALCOVE LOCATION
9. 'M/N' PRELIMINARY TEST ALCOVE: EXACT SIZE & LOCATION TBV
   'M' = TEST ALCOVE #

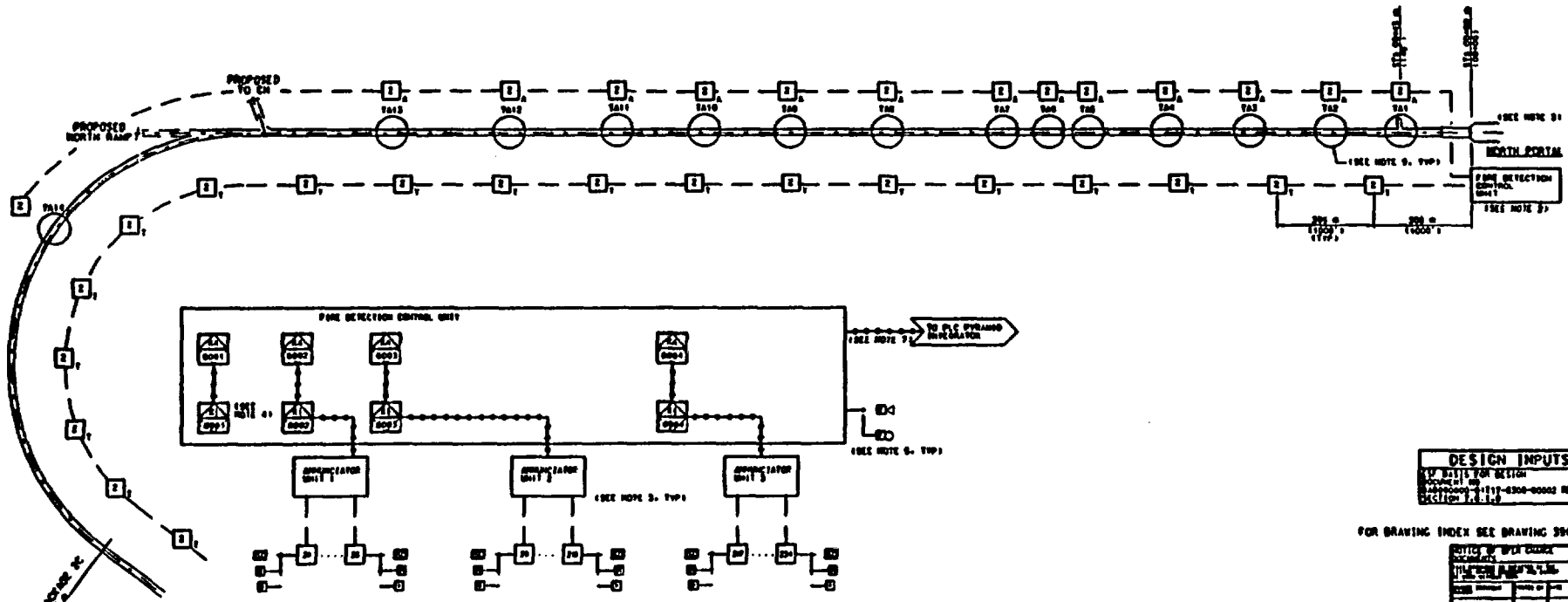

FIRE/SMOKE DETECTION AND ALARM SYSTEM

SCALE: NONE (SEE NOTE 2)

DESIGN INPUTS
KEY BASIS FOR DESIGN
DOCUMENT NO
SECTION 7.2.1.3

FOR DRAWING INDEX SEE DRAWING 39001

00	ISSUED FOR 60% REVIEW	1-8-94	CLG
01	ISSUED FOR 90% REVIEW	4-05-94	CLG

DOE/YMP ACCEPTANCE FOR CONSTRUCTION
By _____ Date _____

U.S. DEPARTMENT OF ENERGY
Yucca Mountain Site Characterization Project
M&O Management & Operating Contractor
EXPLORATORY STUDIES FACILITY PACKAGE 2B
SUBSURFACE
FIRE PROTECTION
P & ID SHT 1

01	BABF 040000-01101-2100-43010-00		
NONE	TBV-	1,2,6	ELEC52:43010.dgn

PRELIMINARY

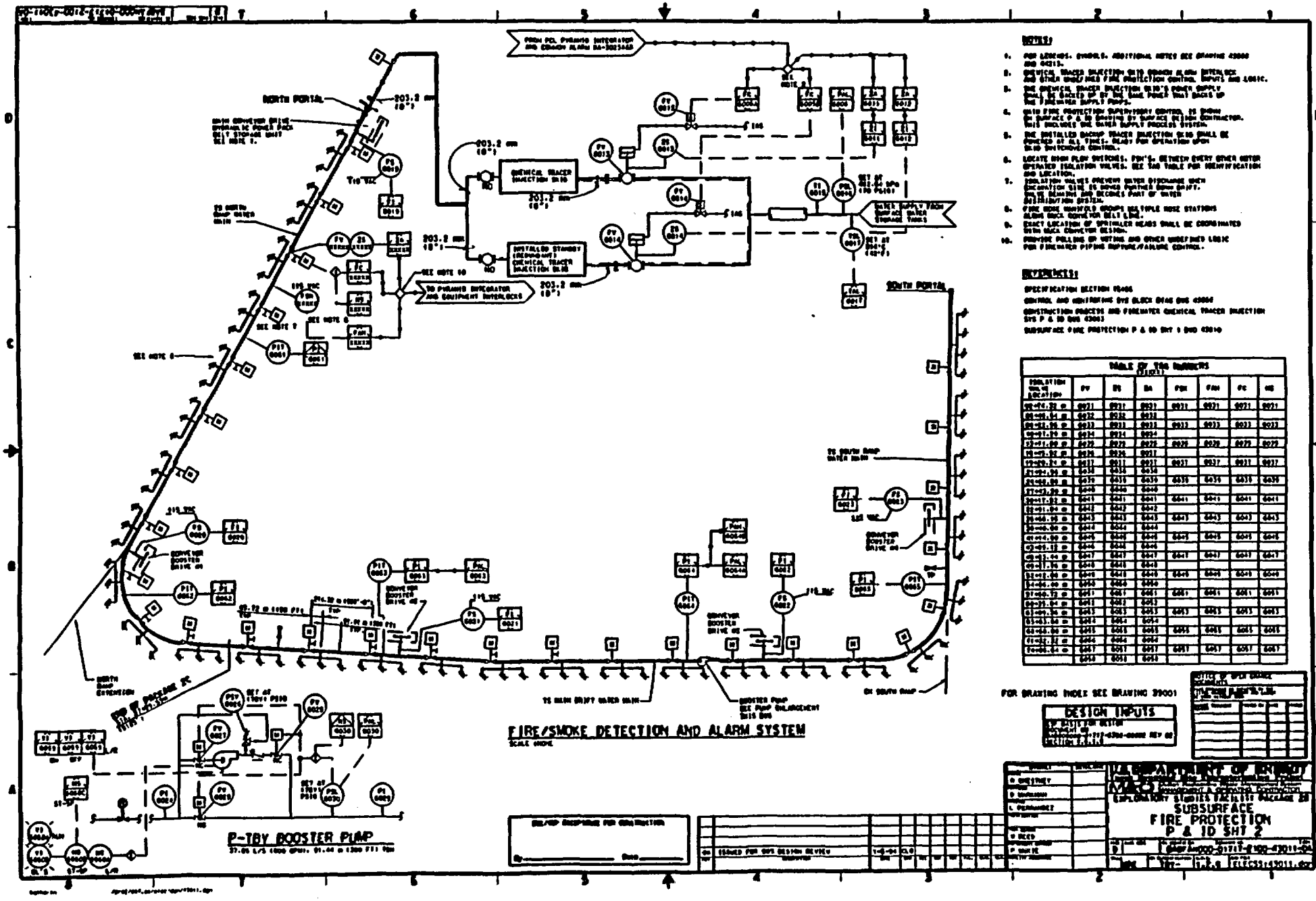
NORTH PORTAL
SOUTH PORTAL
CHEMICAL TRACER INJECTION SKID
INSTALLED STANDBY (REDUNDANT) CHEMICAL TRACER INJECTION SKID
TO PYRAMID INTEGRATOR AND EQUIPMENT INTERLOCKS
FIRE/SMOKE DETECTION AND ALARM SYSTEM
SCALE NONE
P-TBY BOOSTER PUMP
DESIGN INPUTS
FOR DRAWING INDEX SEE DRAWING 39001
SUBSURFACE FIRE PROTECTION P & ID SHT 2
PRELIMINARY

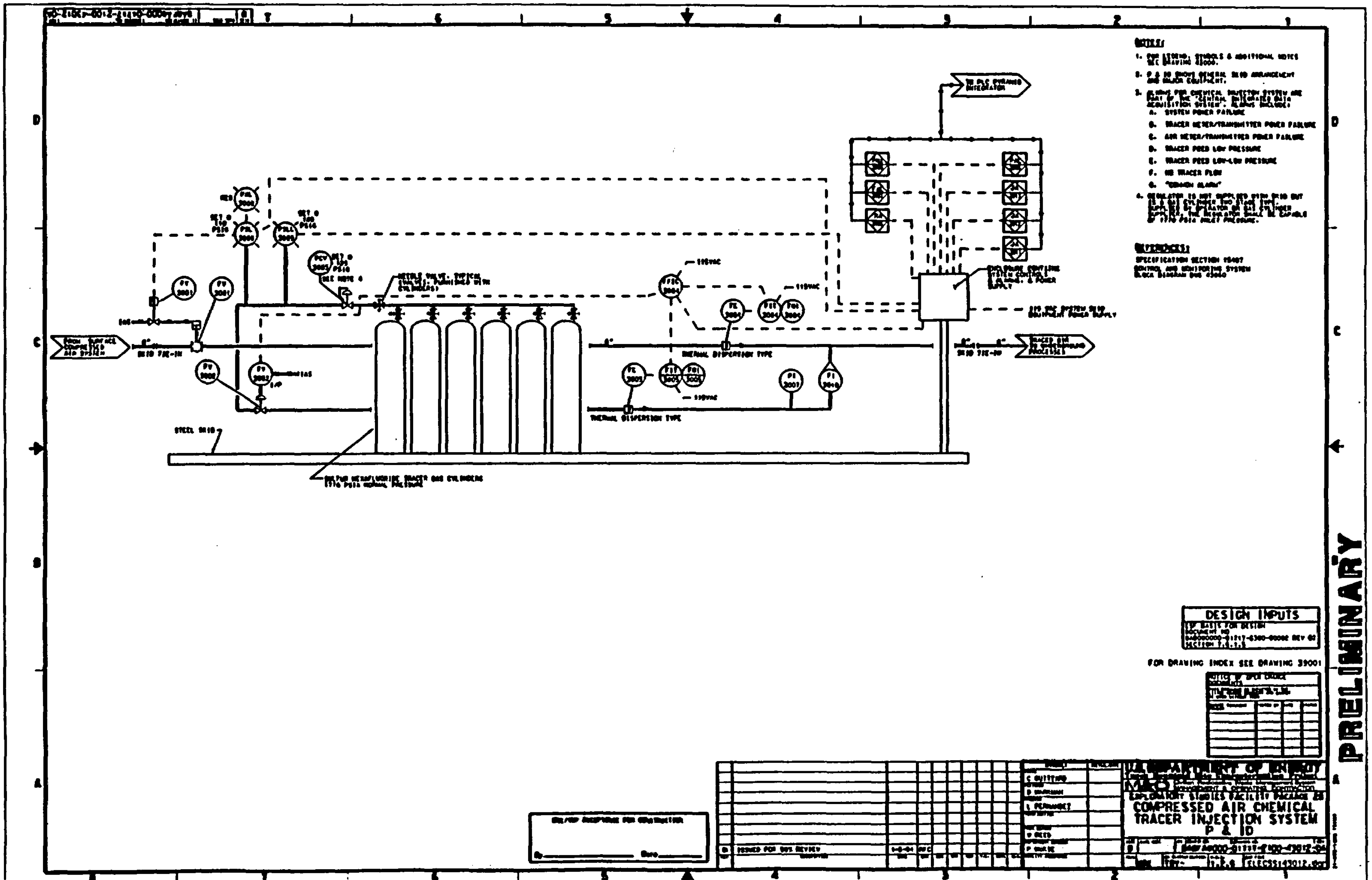
NOTES:
A. SYSTEM POWER FAILURE
REFERENCES:
DESIGN INPUTS
FOR DRAWING INDEX SEE DRAWING 39001
U.S. DEPARTMENT OF ENERGY
EXPLORATORY STUDIES FACILITY PACKAGE 2B
COMPRESSED AIR CHEMICAL
TRACER INJECTION SYSTEM
P & ID
PRELIMINARY
STEEL SKID
THERMAL DISPERSION TYPE
ISSUED FOR DOE REVIEW

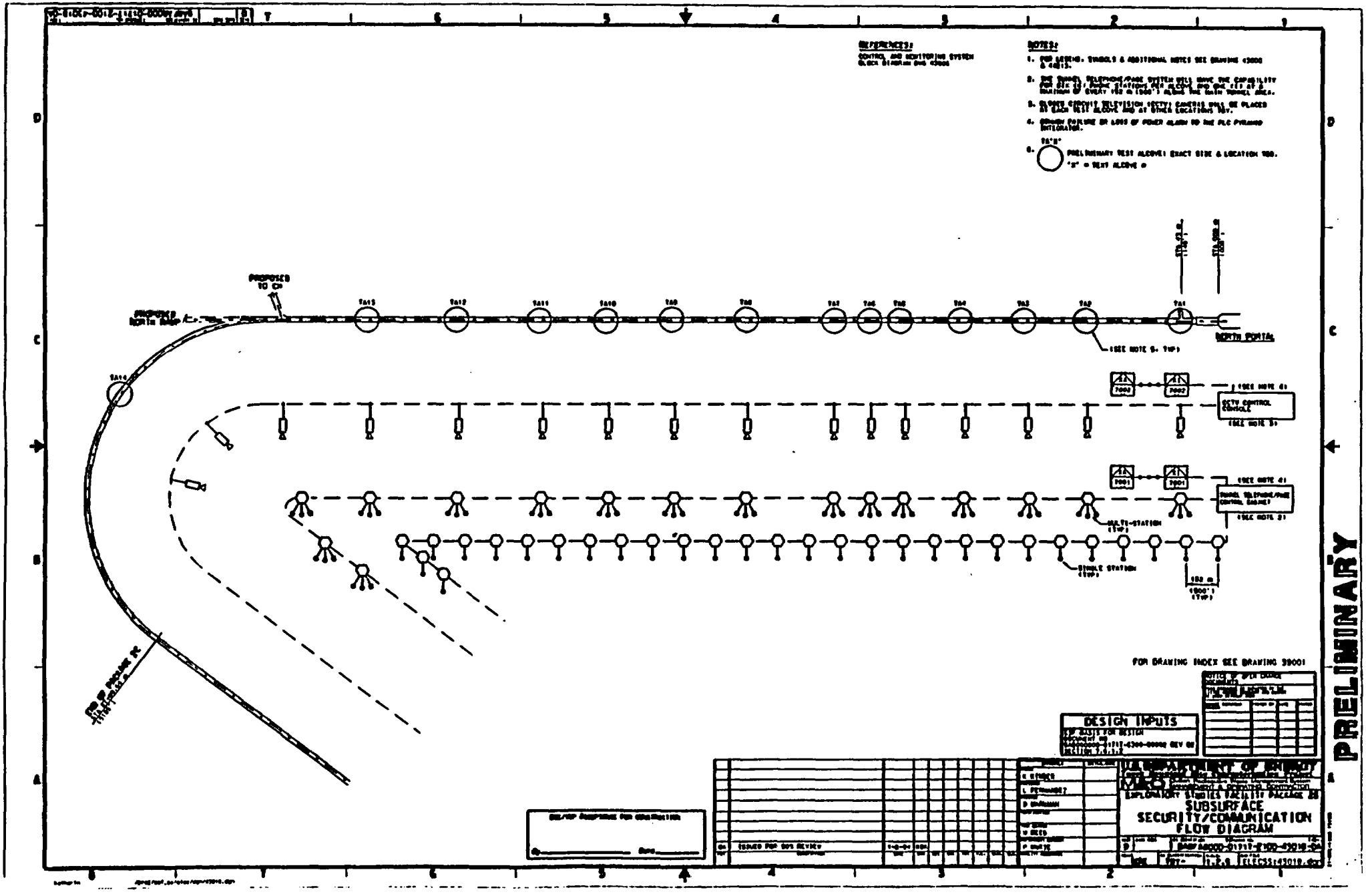
REFERENCES:
CONTROL AND MONITORING SYSTEM BLOCK DIAGRAM DWG 43006
NOTES:
PRELIMINARY TEST ALCOVE: EXACT SIDE & LOCATION TBD.
"A" = TEST ALCOVE #
PROPOSED TO CM
PROPOSED NORTH RAMP
NORTH PORTAL
(SEE NOTE 5, TYP)
(SEE NOTE 4)
CCTV CONTROL CONSOLE
(SEE NOTE 3)
TUNNEL TELEPHONE/PAGE CONTROL CABINET
MULTI-STATION (TYP)
SINGLE STATION (TYP)
1000' (TYP)
FOR DRAWING INDEX SEE DRAWING 39001
DESIGN INPUTS
ISSUED FOR DOE REVIEW
U.S. DEPARTMENT OF ENERGY
YUCCA MOUNTAIN PROJECT
EXPLORATORY STUDIES FACILITY PACKAGE 2B
SUBSURFACE
SECURITY/COMMUNICATION
FLOW DIAGRAM
PRELIMINARY

LIGHTING & POWER SYMBOLS

CONDUIT, TURNING UP ON BOUNDARY WEBS

CONDUIT, TURNING DOWN ON BOUNT FROM WEBS

DOT INDICATES CONDUIT FITTING

CONDUIT CAPPED

CONDUIT, SHORT DASH - PHASE CONDUCTOR, LONG DASH - NEUTRAL, DOT - GROUND CONDUCTOR

CONDUIT RISING DOWN TO PANEL OR AS INDICATED

FLEX CONDUIT CONNECTION

GROUND CABLE - EXPOSED

GROUND ROD OR GROUND CONNECTIONS

GROUND TEST BAR

GROUND

GROUND BUS

SPLICE

PANELBOARD, 277/480V

PANELBOARD, 120/208V OR 120/240V

HEATER PANELBOARD

UNINTERRUPTIBLE POWER SUPPLY SYSTEM

SOLID NEUTRAL

FIXTURE, FLUORESCENT, EMERGENCY WALL MOUNTED, 1 x 4'

FIXTURE, FLUORESCENT, EMERGENCY CEILING OR FLUSH MOUNTED, 1 x 4'

24 - TOTAL NUMBER OF FIXTURES

SERIAL CIRCUIT DESIGNATION

EMERGENCY STATION - EXIT FIXTURE

FIXTURE, INCANDESCENT OR HID, CEILING MOUNTED

FIXTURE, INCANDESCENT OR HID, WALL MOUNTED

FIXTURE, 2-HEAD EMERGENCY UNIT OR BATTERY PACK

FIXTURE, 2-HEAD EMERGENCY REMOTE SINGLE HEAD EMERGENCY UNIT OR BATTERY PACK

SEE FIXTURE SCHEDULE

SINGLE RECEPTACLE OUTLET, 20A, 125VAC

OUTLET GROUNDING TYPE RECEPTACLE, 20A, 125VAC

OUTLET RECEPTACLE OUTLET, "GFI" DENOTES RECEPTACLE WITH 20A, 125VAC WITH GROUND FAULT CIRCUIT INTERRUPTER

INDICATES RECEPTACLE WITH GROUND FAULT CIRCUIT INTERRUPTER

DOUBLE DUPLEX GROUNDING TYPE RECEPTACLE, 20A, 125VAC

POWER OUTLET, 208VAC, AS NOTED

POWER OUTLET, 480VAC, AS NOTED

DOUBLE OUTLET ARRANGEMENT - SINGLE TYPE GROUNDING RECEPTACLES

SWITCH, TOGGLE, SINGLE POLE, 20A, 125/277VAC

SWITCH, TOGGLE, DOUBLE POLE, 20A, 125/277VAC

SWITCH, TOGGLE, THREE WAY, 20A, 125/277VAC

SWITCH, TOGGLE, FOUR WAY, 20A, 125/277VAC

SWITCH, MANUAL MOTOR STARTER, 20A, 125/277VAC

SWITCH, SPEAKER VOLUME CONTROL, 120VAC

SWITCH, SAFETY - MANUAL DENOTES AMP RATING

SWITCHGEAR TEST PUSHBUTTON

PUSHBUTTON STATION

MOTOR CONNECTION - MANUAL DENOTES HORSEPOWER, FINAL CONNECTION WITH FLEX CONDUIT

DAMPER MOTOR

BELL

HORN WITH STROBE LIGHT AS ONE ASSEMBLY

MANUAL ALARM BOX PULL STATION

FIRE ZONE - ALCOVE

FIRE ZONE - TUNNEL

HEAT DETECTOR

SMOKE DETECTOR - TYPE HSD

FIRE ALARM CONTROL PANEL

THERMOSTAT

ELECTRICAL ENCLOSURE AS NOTED

FLUSH MOUNT CEILING SPEAKER

HORN TYPE SPEAKER

BI-DIRECTIONAL HORN TYPE SPEAKER, BRACKET INDICATES WALL MOUNT

JUNCTION BOX - CEILING MOUNTED

JUNCTION BOX - WALL MOUNTED

EXIT LIGHT - CEILING MOUNTED, ARROW INDICATES DIRECTION TOWARD EXIT DOOR

EXIT LIGHT - WALL MOUNTED

EXIT SIGN, NON-ILLUMINATED, DOUBLE FACE, FLANGE MOUNTED

TUNNEL TELEPHONE STATION TERMINAL/JUNCTION BOX

TUNNEL TELEPHONE/PAGE STATION

TELEPHONE WALL OUTLET

COMBINATION TELEPHONE/DATA WALL OUTLET

TELEPHONE FLOOR OUTLET

COMBINATION TELEPHONE/DATA FLOOR OUTLET

STANDARD DETAIL/ASSEMBLY CALLOUT.

DETAIL/ASSEMBLY NUMBER DRAWING WHERE DETAIL IS SHOWN

UNDERGROUND DUCT BANK

CLOSED CIRCUIT TELEVISION RECEIVE STATION

NOTES:

1. REFER TO LIGHTING FIXTURE SCHEDULE FOR MOUNTING HEIGHTS, BALLAST TYPES, LAMP APPROVED EQUALS AND LAMP REQUIREMENTS.
2. UNLESS NOTED OTHERWISE, ALL MOUNTED LIGHTING SWITCHES SHALL BE LOCATED 1.67 m (5'-5") TO CENTERLINE OF DEVICE.
3. UNLESS NOTED OTHERWISE, WALL MOUNTED SPEAKERS, FLASH HORNS & BELLS SHALL BE LOCATED 2.13 m (7'-0") TO CENTERLINE OF DEVICE.

DESIGN INPUTS

FOR DRAWING INDEX SEE DRAWING 39001

SUBMITTED FOR DOE REVIEW

DOE/NVO ACCEPTANCE FOR CONSTRUCTION

By _____ Date _____

U.S. DEPARTMENT OF ENERGY

MOB

EXPLORATORY STUDIES FACILITY PACKAGE 2B

SUBSURFACE

ELECTRICAL NOTES & LEGEND

LIGHTING & POWER

PRELIMINARY

ESF Subsurface Design

Package 2B

90% Design Review

CIVIL/STRUCTURAL DESIGN

Kenneth J. Herold
January 7, 1994

Package 2B - Civil/Structural Design

Civil/Structural Review Participants

Ken Herold	794-5393
Ted Gonzaga	794-5390
Spiro Romanos	794-7053
Walt Golien	794-7931

Package 2B - Civil/Structural Design

List of Deliverables (1)

Analyses:

- **BABFCB000-01717-0200-00139**
  TBM Tunnel Precast Concrete Invert Segment - Design Calcs

Drawings:

- **BABFCC000-01717-2100-41099**
  Rail Placement Invert Segments - A
  Plan, Sections & Details
- **BABFCC000-01717-2100-41100**
  Rail Placement Invert Segments - B
  Plan & Sections

Package 2B - Civil/Structural Design

List of Deliverables (2)

Specifications:

- **BAB000000-01717-6300-03101**
  Concrete Formwork - Subsurface
- **BAB000000-01717-6300-03201**
  Concrete Reinforcement - Subsurface
- **BAB000000-01717-6300-03301**
  Cast-in-Place Concrete - Subsurface
- **BAB000000-01717-6300-03480**
  Precast Concrete

Package 2B - Civil/Structural Design

List of Deliverables (3)

Specifications: (Continued)

- **BAB000000-01717-6300-03600**
  Equipment & Structural Support & Base Plate Grout - Subsurface
- **BABDCA000-01717-6300-11911**
  Additional Trailing Floor with Geologic Mapping Gantry

Package 2B - Civil/Structural Design

Withdrawn From Package 2B

Analyses:

- **BABFCB000-01717-0200-00148**

  ESF Subsurface Design Muck Handling Conveyor Bend Tower & Bent #1 Support Foundations

- **BABFCB000-01717-0200-00149**

  ESF Subsurface Design Muck Handling, Transfer Tower Foundation

Drawings:

- **BABFCB000-01717-2100-41096**

  Bend Tower & Bent #1 Foundation - Plan, Sections & Details

- **BABFCB000-01717-2100-41097**

  Transfer Tower Foundation - Plan, Sections & Details

Package 2B - Civil/Structural Design

Withdrawn From Package 2B - (Continued)

Specifications:

- **BAB000000-01717-6300-02221**
  Foundations, Excavation & Backfill - Subsurface
- **BAB000000-01717-6300-02380**
  Drilled Concrete Piers

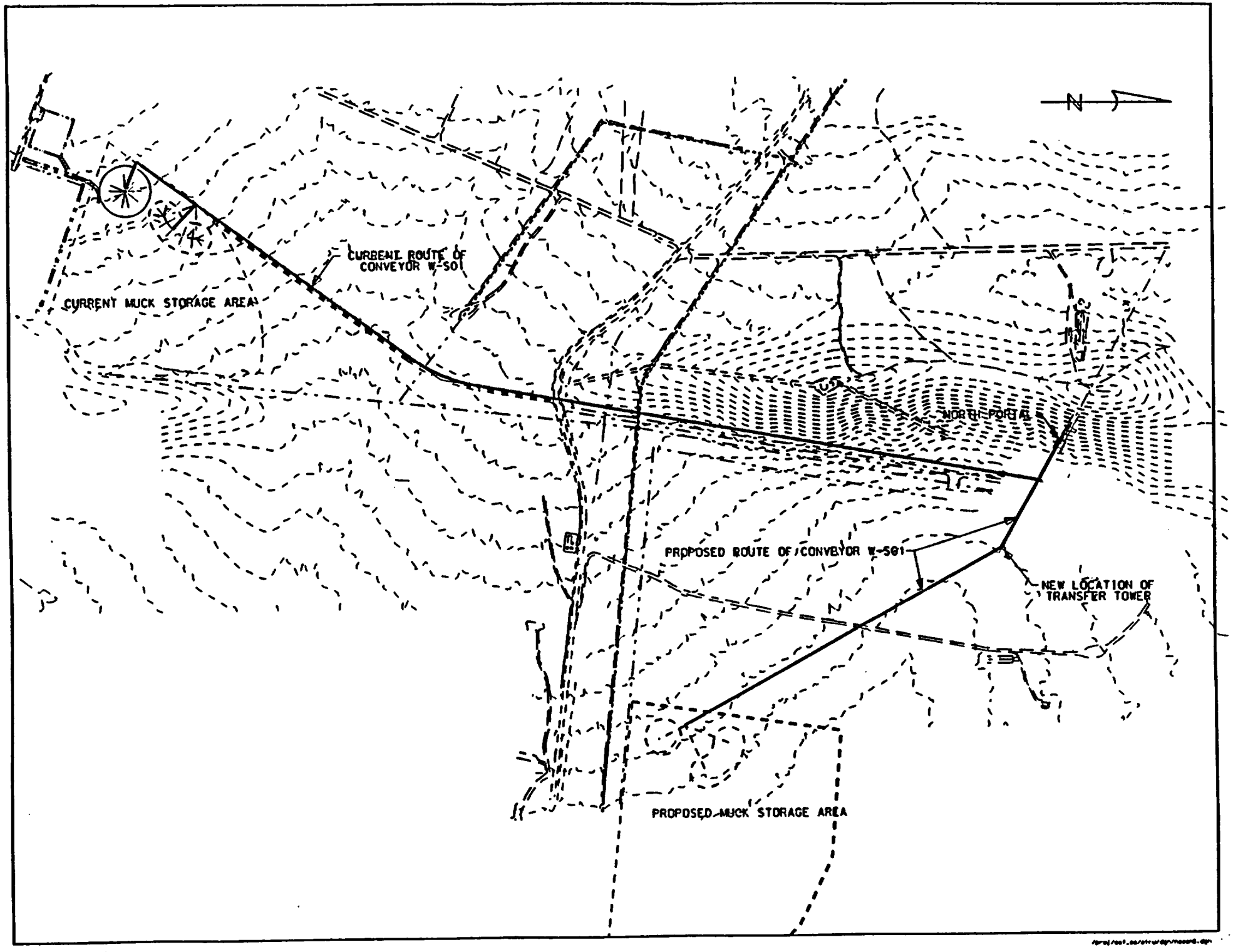
N
CURRENT ROUTE OF CONVEYOR W-S01
CURRENT MUCK STORAGE AREA
NORTH PORTAL
PROPOSED ROUTE OF CONVEYOR W-S01
NEW LOCATION OF TRANSFER TOWER
PROPOSED MUCK STORAGE AREA

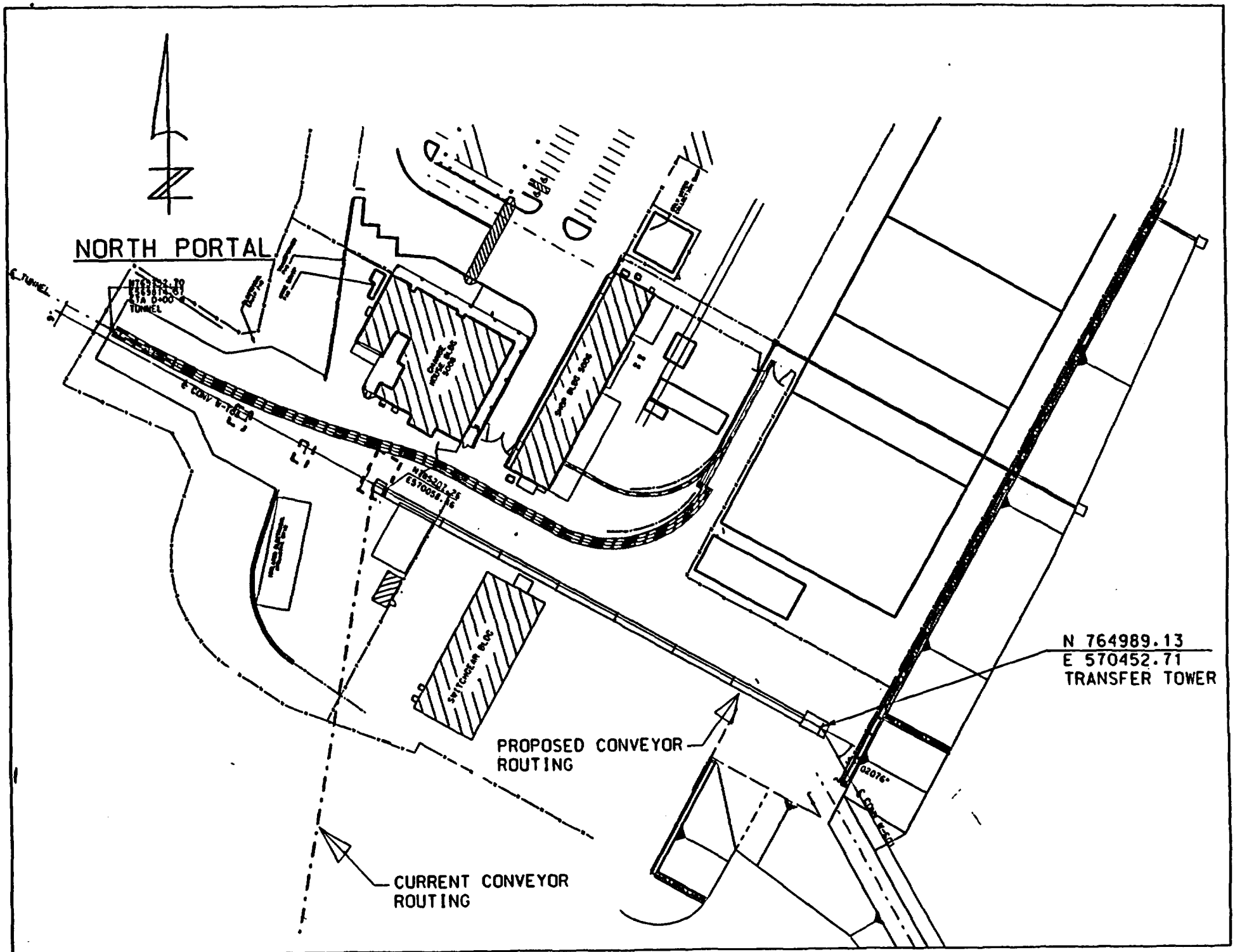

04-JAN-1994 16:28

/proj/esf_ss/stru/dgn/utilpln.dgn

Package 2B - Civil/Structural Design

Structural Design Elements Included in Package 2B

- TBM tunnel precast concrete invert segments
- Additional trailing floor with Geologic Mapping Gantry

Package 2B - Civil/Structural Design

TBM Tunnel Precast Concrete
Invert Segments Design Covers

- TBM Tunnel Precast Concrete Invert Segment - Design Calcs
- Rail Placement Invert Segments - A
  Plan, Sections & Details
- Rail Placement Invert Segments - B
  Plan, Sections & Details
- Precast Concrete Specification
- Concrete Reinforcement - Subsurface Specification
- Concrete Formwork - Subsurface Specification
- Cast-in-Place Concrete - Subsurface Specification

Package 2B - Civil/Structural Design

- **TBM Tunnel Precast Concrete Invert Segments - Design Calcs (1)**

Purpose:

- Design TBM Tunnel Precast Concrete Invert Segments for locomotive loads and for lifting loads
- Design lifting anchors to be used for rigging during installation
- Design miscellaneous items for rails adjustment required to meet tolerances
- Two types

  Segment A - Typical

  Segment B - Required for pipe crossing from left rib to right rib

Package 2B - Civil/Structural Design

- **TBM Tunnel Precast Concrete Invert Segments - Design Calcs (2)**

Quality Assurance:

- To be determined by Determination of Importance Evaluation. Expected to be non-QA item because segments are designed to be removable.

Design Method:

- Hand calculations

Codes and Standards:

- CFR 30, CFR 29, California Code of Regulations, Military Standard 1472D, AISC, ASCE, ASTM, AWS, ACI

Package 2B - Civil/Structural Design

- **TBM Tunnel Precast Concrete Invert Segments - Design Calcs (3)**

Design Inputs:

- Dimensions for precast concrete invert from TS North Ramp Invert Concrete Segment Plan, Section & Details - BAB000000-01717-2100-40179
- General Arrangement, invert segment rail weight & track - BABFCC000-01717-0200-00137
- Rails loadings and dynamic factor
- Commercial product - lifting anchor structural properties
- Allowable bearing capacity for North Ramp rock

Package 2B - Civil/Structural Design

- **TBM Tunnel Precast Concrete Invert Segments - Design Calcs (4)**

Criteria:

- BFD

Assumptions:

- Dimensions and sizes of the precast concrete invert segment are compatible with Contractor's rigging scheme. This assumption will be verified against the Contractor's final rigging scheme.
- The location, number and sizes of lifting anchor is based on Contractor's preliminary recommendations and comments. This assumption will be verified against the Contractor's final rigging scheme.

Package 2B - Civil/Structural Design

- **TBM Tunnel Precast Concrete Invert Segments - Design Calcs (5)**

Computer programs:

- None

Conclusions:

- Use concrete sections and reinforcement as shown on drawings.

Package 2B - Civil/Structural Design

- **Concrete Formwork - Subsurface Specification (1)**

Section includes:

- Furnishing, erecting, bracing and removal of subsurface formwork for concrete

Quality Assurance:

- Considered not important to waste isolation or radiological safety. Decision still not determined.
- Dimensional/visual inspection
- Written criteria for design and construction

Products:

- Forms

Package 2B - Civil/Structural Design

- **Concrete Formwork - Subsurface Specification (2)**

Execution:

- Examine form foundation
- Fabricate and erect forms
- Provide construction joints, contraction joints and isolation joints
- Provide forms to produce smooth, pleasing surfaces for exposed concrete

Submittals and notification:

- Shop drawings, calculations & schedules in accordance with "Submittal and Notification Requirements"

Package 2B - Civil/Structural Design

- **Concrete Reinforcement - Subsurface Specification (1)**

Section includes:

- Furnishing reinforcing steel bars, welded wire fabric and accessories

Quality Assurance:

- Specification to be used for both QA and non-QA items as directed by Determination of Importance Evaluation
- Material dedication required when determined to be quality affecting
- Tensile testing required
- Dimensional/visual inspection of products
- Identification of products

Package 2B - Civil/Structural Design

- **Concrete Reinforcement - Subsurface Specification (2)**

Products:

- Reinforcing bars
- Welded wire fabric
- Accessories

Execution:

- Cleaning
- Placement in accordance with drawings and this specification

Submittals and notification:

- Shop drawings and notification in accordance with "Submittal and Notification Requirements"

Package 2B - Civil/Structural Design

- **Cast-in-Place Concrete - Subsurface Specification (1)**

Section includes:

- Furnishing all materials, tools, equipment, and labor necessary to mix, transport, place, finish, and cure concrete for foundations, tunnel and alcove crown, walls, ramp invert, equipment bases, and other concrete as specified herein and indicated on subsurface drawings.

Package 2B - Civil/Structural Design

- **Cast-in-Place Concrete - Subsurface Specification (2)**

Quality Assurance:

- Specification to be used for both QA and non-QA items as directed by Determination of Importance Evaluation
- Material dedication required when determined to be quality affecting
- Compressive strength testing
- Dimensional/visual inspection of products and containers
- Field verification per specification

Package 2B - Civil/Structural Design

- **Cast-in-Place Concrete - Subsurface Specification (3)**

Products:

- Aggregates
- Water
- Admixtures
- Cement
- Design Mix
- Curing Materials

Package 2B - Civil/Structural Design

- **Cast-in-Place Concrete - Subsurface Specification (4)**

Execution:

- Surface preparation
- Field Quality Control
- Production
- Conveying and placement
- Finishing
- Curing

Package 2B - Civil/Structural Design

- **Cast-in-Place Concrete - Subsurface Specification (5)**

Submittals and Notification:

- **Shop drawings, placement logs, design mix and other information as required in "Submittals and Notification Requirements"**

Package 2B - Civil/Structural Design

- **Precast Concrete Specification (1)**

Section includes:

- Furnishing all materials, tools, equipment, and labor necessary to fabricate, cure concrete, and transport precast concrete members.

Quality Assurance:

- Considered not important to waste isolation or radiological safety because units are designed to be removed. However, Determination of Importance Evaluation has not been completed.
- Construction to conform to drawings.
- Receipt verification and field verification to conform to this specification.

Package 2B - Civil/Structural Design

- **Precast Concrete Specification (2)**

Products:

- Aggregates
- Water
- Admixtures
- Cement
- Reinforcement
- Mix
- Curing Materials

Package 2B - Civil/Structural Design

- **Precast Concrete Specification (3)**

Execution:

- Fabrication tolerances
- Curing
- Sampling and testing
- Casting
- Delivery

Package 2B - Civil/Structural Design

- **Precast Concrete Specification (4)**

Submittals and Notification:

- Shop drawings, documentation and receipt notification in accordance with "Submittals and Notification Requirements"

Package 2B - Civil/Structural Design

- **Equipment and Structural Support Base Plate - Grout - Subsurface (1)**

Section includes:

- Furnishing all labor, materials, tools, equipment, and performing all work required for installation of group in accordance with the requirements of this section and as shown on the drawings.

Quality Assurance:

- Considered not important to waste isolation or radiological safety. Determination of Importance Evaluation not yet completed.
- Receipt verification and field verification in accordance with this specification.

Package 2B - Civil/Structural Design

- **Equipment and Structural Support Base Plate - Grout - Subsurface (2)**

Products:

- Grout materials and strength
- Portland Cement
- Water
- Fine aggregate

Execution:

- Surface preparation
- Mix design
- Placement
- Curing

Package 2B - Civil/Structural Design

- **Equipment and Structural Support Base Plate - Grout - Subsurface (3)**

Submittals and Notification:

- **Verifications and Installation Procedures in accordance with "Submittal and Notification Requirements"**

Package 2B - Civil/Structural Design

- **Civil/ Structural Drawings**

Rail Placement Invert Segments - A

Plan, Sections & Details

- Typical for length of 7.62m bore
- Designed to accept steel sets if required
- Not cast solid to effect weight reduction for easier handling

Rail Placement Invert Segments - B

Plan & Sections

- Used only where required for pipe crossing from left rib to right rib
- Not designed to accept steel sets
- Roughly same weight as Segment A

Package 2B - Civil/Structural Design

- **Additional Trailing Floor With Geologic Mapping Gantry Specification (1)**

Purpose:

The mapping deck/gantry will rest upon rail cars located between the third and fourth cars of the TBM trailing gear. The main purpose of the deck is to provide for geologic mapping. The deck will also provide for the installation of a platform to enable water spray cleaning of the tunnel rib for mapping and to support drilling equipment for horizontal rock bolt placement, and the installation of a supplemental ground support platform. Utilities will be continued along the deck, including the conveyor and ventilation duct. The mapping gantry will operate over a 150-foot interval of trailing floor.

Package 2B - Civil/Structural Design

- **Additional Trailing Floor With Geologic Mapping Gantry Specification (2)**

Development:

Placing the mapping operations in the trailing gear instead of behind the machine is a change to previous strategy and does require that additional equipment be obtained in the form of the trailing decks. The previous plan required a second utility jumbo, in addition to the mapping platform, for crews working behind the mappers relocating the utilities. Under the current plan, the second jumbo is not required.

Package 2B - Civil/Structural Design

- **Additional Trailing Floor With Geologic Mapping Gantry Specification (3)**

Development: (Continued)

The biggest advantage of the new location for the scientific operations is that the tunnel is available to the scientists sooner in the excavation process and a larger segment is available for photography. An added advantage is the labor savings realized by not needing to relocate utilities around the scientific operations on the mapping platform.

Package 2B - Civil/Structural Design

- **Additional Trailing Floor With Geologic Mapping Gantry Specification (4)**

Development: (Continued)

The resulting configuration and specification is the result of extensive integration and coordination meetings and discussions between personnel of the following organizations:

- United States Bureau of Reclamation - Charged with the photography and mapping required for site characterization within the tunnel bore.
- Los Alamos National Laboratory - Charged with the testing requirements for site characterization within the tunnel bore.

Package 2B - Civil/Structural Design

- **Additional Trailing Floor With Geologic Mapping Gantry Specification (5)**

Development: (Continued)

- **Kiewit/PB - Subcontractor to REECo, charged with TBM operation and its associated trailing gear.**
- **M&O - Charged with preparing a performance specification for the procurement of the mapping gantry as described in the Exploratory Studies Facility Design Requirements (ESFDR).**

Package 2B - Civil/Structural Design

- **Additional Trailing Floor With Geologic Mapping Gantry Specification (6)**

Development: (Continued)

Meetings were scheduled and held on the following dates:

June 10, 1993

June 15, 1993

August 24, 1993

September 13, 1993

September 24, 1993

September 30, 1993

October 27, 1993

Package 2B - Civil/Structural Design

- **Additional Trailing Floor With Geologic Mapping Gantry Specification (7)**

Development: (Continued)

Input from Kiewit/PB personnel commenced at the August 24, 1993 meeting, at which time it was decided to have the mapping gantry ride a trailing floor which would be inserted between cars number 3 and number 4 of the TBM trailing gear. As stated previously, this was a change from the original concept of having the mapping gantry operate independently behind the TBM trailing gear.

Package 2B - Civil/Structural Design

- **Additional Trailing Floor With Geologic Mapping Gantry Specification (8)**

Section Includes:

- Performance specification for mapping gantry and supporting trailing floor

Quality Assurance:

- Considered not important to waste isolation or radiological safety. However, decision has not yet been made for Determination of Importance Evaluation.

System Description:

- As explained previously under Purpose
- Refer to Figure 11911-A, "Geologic Mapping Gantry and Trailing Floor"

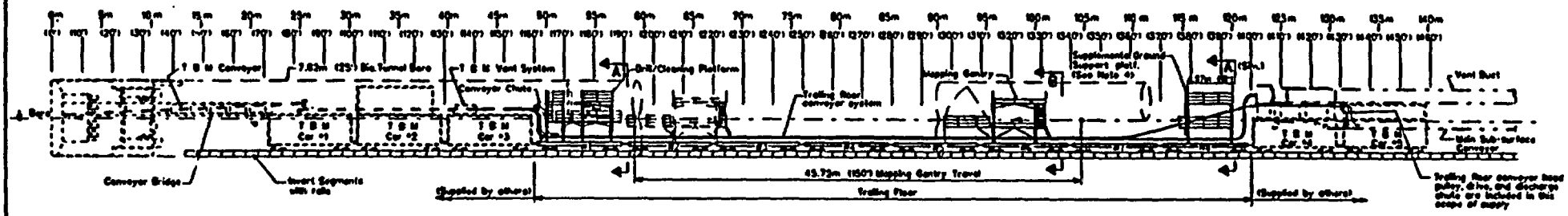

E L E V A T I O N

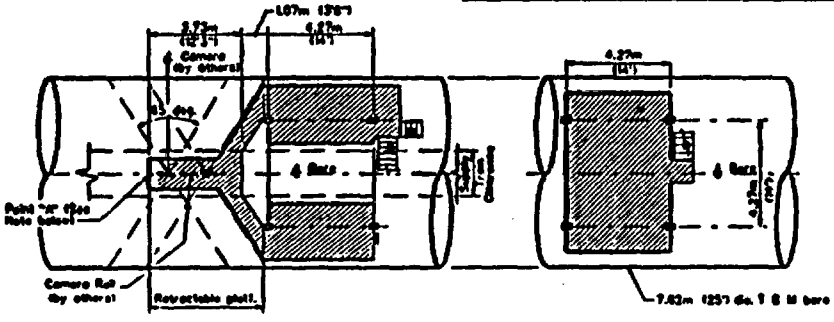

P L A N - L E V E L A

NOTE: Maximum 25mm (1") deflection under 136 kg (300#) concentrated load @ Point "A"

P L A N - L E V E L B

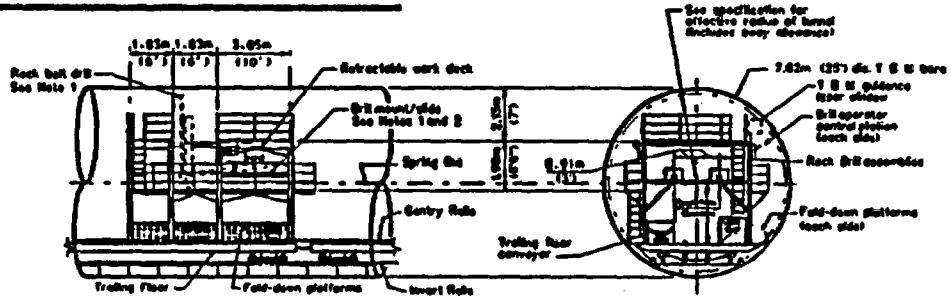

S I D E V I E W

S E C T I O N A

NOTE:
1. Drill shall be mounted on telescopic boom-mounted slide. Drill and slide assembly shall be per Specification BAP80000-61717-6300-10500.
2. Drill mount shall be on rail to provide travel parallel with tunnel centerline.
3. Superstructure shall be braced against sway in 4 planes.
4. Supplemental Ground Support platform construction shall be similar type to that shown for the Drill/Cleaning platform except that there shall be no retractable upper deck.

DRILL/CLEANING PLATFORM

AS SHOWN

SUPPLEMENTAL GROUND SUPPORT PLATFORM

OPPOSITE HAND

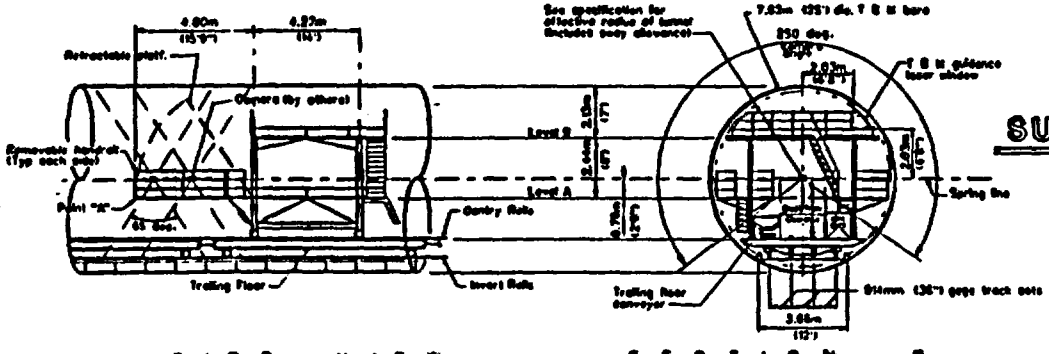

S I D E V I E W

S E C T I O N B

MAPPING GANTRY

Kiewit Construction Group Inc.
MANAGEMENT & OPERATING CONTRACTOR

GEOLOGIC MAPPING GANTRY AND TRAILING FLOOR

11911 - A

Package 2B - Civil/Structural Design

- **Additional Trailing Floor With Geologic Mapping Gantry Specification (9)**

Products:

- Eight-car trailing floor with utilities and muck conveyor
- Mapping gantry independently propelled on rails mounted on trailing floor

Execution:

- Design, fabricate and deliver trailing floor and geologic mapping gantry
- Provide assistance to Contractor for field erection