Union Electric

One Ameren Plaza
1901 Chouteau Avenue
PO Box 66149
St. Louis, MO 63166-6149
314.621.3222

June 27, 2003

U. S. Nuclear Regulatory Commission
Attn: Document Control Desk
Mail Stop P1-137
Washington, DC 20555-0001

Ladies and Gentlemen: ULNRC-04866

DOCKET NUMBER 50-483
CALLAWAY PLANT UNIT 1
UNION ELECTRIC CO.
LICENSE AMENDMENT REQUEST OL-1225
REVISION TO TECHNICAL SPECIFICATIONS FOR EXTENSION OF
REQUIRED ACTION COMPLETION TIME FOR DIESEL GENERATORS

Union Electric Company (AmerenUE) hereby transmits an application for amendment to Facility Operating License No. NPF-30 for the Callaway Plant. Specifically, AmerenUE requests revision of Technical Specification (TS) 3.8.1, "AC Sources – Operating," to extend the Required Action Completion Time for an inoperable diesel generator. This proposed change is based on the methodology provided in WCAP- 15622, "Risk-Informed Evaluation of Extensions to AC Electrical Power System Completion Times," and as addressed in Industry/Technical Specification Task Force (TSTF) Standard Technical Specification (STS) change TSTF-417, Rev. 0.

In addition, AmerenUE requests incorporation of the changes included in TSTF-439, Revision 1, which would eliminate for certain Required Actions, the Completion Times established to limit the maximum time allowed for any combination of Conditions of inoperability during any single continuous failure to meet the Limiting Condition for Operation. These changes would also affect TS 3.8.1, but TS 1.3, "Completion Times"; TS 3.6.6, "Containment Spray and Cooling Systems"; TS 3.7.5, "Auxiliary Feedwater (AFW) System"; and TS 3.8.9, "Distribution Systems – Operating," would be changed as well.

Essential information is provided in the attachments to this letter. Attachment 1 contains a description of the proposed changes, the supporting technical analyses, and the significant hazards determination. Attachment 2 provides plant-specific

A001

information to supplement information that was previously provided by the Westinghouse Owners Group in response to NRC requests for information regarding the aforementioned Topical Report, WCAP-15622. Attachments 3 and 4 contain marked-up and revised TS pages, respectively. Attachment 5 contains proposed changes to the TS Bases (in marked-up form) to assist the staff in its review of the proposed changes. These Bases changes are provided for information only, and will be implemented pursuant to the TS Bases Control Program, TS 5.5.14, upon approval of this license amendment. Lastly, Attachment 6 identifies commitments made by AmerenUE/Callaway in connection with the proposed Technical Specification changes.

As indicated in Attachment 1, the proposed TS changes have been evaluated pursuant to CFR 50.92, and it has been determined that this amendment application does not involve a significant hazard consideration. In addition, evaluation of the proposed changes against the requirements of 10 CFR 51.22(b) has determined that no environmental impact statement or environmental assessment needs to be prepared in connection with the issuance of a license amendment for the proposed changes. The bases for these determinations are included in Attachment 1. AmerenUE's evaluation of the proposed changes includes traditional engineering analyses as well as a risk-informed approach as set forth in Regulatory Guide 1.177, "An Approach for Plant-Specific, Risk-Informed Decision making: Technical Specifications."

AmerenUE is submitting this License Amendment Request (LAR) in conjunction with an industry consortium of six plants as a result of a mutual agreement known as Strategic Teaming and Resource Sharing (STARS). The STARS group consists of the six plants operated by TXU Generation Company LP, Union Electric Company, Wolf Creek Nuclear Operating Corporation, Pacific Gas and Electric Company, STP Nuclear Operating Company, and Arizona Public Service Company. Other members of the group are expected to submit license amendment requests similar to this one. Due to design differences between the STARS plants, there may be some differences in the plant LARs, particularly for the information provided in Attachment 1.

With regard to NRC approval of this LAR, it should be noted that the proposed changes may affect the scheduling of DG maintenance and testing activities, including which activities are to be performed during plant operation and which are to be performed during plant refueling outages. The changes could therefore affect the scheduling of activities for the next refueling outage (RF-13) for Callaway, which is scheduled for Spring of 2004. On this basis, AmerenUE respectfully requests approval of the proposed changes by February 1, 2004. It is anticipated that the resultant license amendment (if approved) will be effective upon issuance, to be implemented within 60 days from the date of issuance.

In accordance with 10 CFR 50.91, a copy of this application, with attachments, is being provided to the designated Missouri State official. Please contact us for any questions you may have regarding this application.

Very truly yours,

David Shafer
Acting Manager, Regulatory Affairs

TBE/mlo

Attachments: 1 – Evaluation
2 – Plant-Specific Information in Support of Responses to NRC Request for Additional Information Regarding WCAP-15622
3 – Marked-Up Technical Specifications
4 – Proposed/Revised Technical Specifications
5 – TS Bases Changes (For Information Only)
6. List of Commitments

STATE OF MISSOURI)
) S S
COUNTY OF CALLAWAY)

David Shafer, of lawful age, being first duly sworn upon oath says that he is Acting Manager, Regulatory Affairs, for Union Electric Company; that he has read the foregoing document and knows the content thereof; that he has executed the same for and on behalf of said company with full power and authority to do so; and that the facts therein stated are true and correct to the best of his knowledge, information and belief.

By David Shafer
David Shafer
Acting Manager, Regulatory Affairs

SUBSCRIBED and sworn to before me this 27th day of June, 2003.

Carol A. Head

CAROL A. HEAD
Notary Public - Notary Seal
STATE OF MISSOURI
St. Charles County
My Commission Expires: Sept. 23, 2006

cc: U. S. Nuclear Regulatory Commission (Original) w/a
Attn: Document Control Desk
Mail Stop P1-137
Washington, DC 20555-0001

Mr. Thomas P. Gwynn w/o
Regional Administrator
U.S. Nuclear Regulatory Commission
Region IV
611 Ryan Plaza Drive, Suite 400
Arlington, TX 76011-4005

Senior Resident Inspector w/o
Callaway Resident Office
U.S. Nuclear Regulatory Commission
8201 NRC Road
Steedman, MO 65077

Mr. Jack N. Donohew (2 copies) w/a
Licensing Project Manager, Callaway Plant
Office of Nuclear Reactor Regulation
U. S. Nuclear Regulatory Commission
Mail Stop 7E1
Washington, DC 20555-2738

Manager, Electric Department w/o
Missouri Public Service Commission
PO Box 360
Jefferson City, MO 65102

Mr. Gerhard K. Samide w/o
ANI Account Engineer
Town Center, Suite 3005
29 S. Main St.
West Hartford, CT 06107-2445

Deputy Director w/o
Department of Natural Resources
Central Regional Office
P.O. Box 176
Jefferson City, MO 65102-0176

Ms. Jennifer L. Yunk
Superintendent, Licensing
Wolf Creek Nuclear Operating Corporation
PO Box 411
Burlington, KS 66839

EVALUATION

Contents

Subject: Revision to Technical Specifications to Extend Required Action Completion Time for an Inoperable Diesel Generator and to Eliminate 'Second' Completion Times for Limiting Time from Discovery of Failure to Meet an LCO

1.0 DESCRIPTION

As noted in the cover letter, two sets of changes are proposed for the Callaway Technical Specifications under this LAR. The changes overlap with respect to TS 3.8.1, so it is appropriate to process the changes together. Each set of changes is separately described below.

1.1 Extension of Completion Time for an Inoperable Diesel Generator

TS 3.8.1 specifies operability requirements for the onsite and offsite AC electrical power sources for the facility. Included in this TS are the Required Actions to be taken when a source(s) is declared inoperable. In particular, with one diesel generator (DG) inoperable, Condition B applies so that its associated Required Actions must be entered and met. These include performing Surveillance Requirement (SR) 3.8.1.1 (to verify availability and alignment to the offsite circuit/source) in accordance with Required Action B.1, AND declaring required features supported by the inoperable DG inoperable when required redundant features are inoperable, in accordance with Required Action B.2, AND determining that the OPERABLE DG is not inoperable due to a common cause failure OR performing SR 3.8.1.2 for the OPERABLE DG (i.e., starting the DG and verifying that proper steady-state voltage and frequency are achieved) in accordance with Required Action B.3.1 or B.3.2, respectively, AND restoring the inoperable DG to OPERABLE status in accordance with Required Action B.4.

Required Action B.4 requires restoring the inoperable DG to OPERABLE status within a specified Completion Time which may also be referred to as the allowed outage time (AOT). If the inoperable DG is not or cannot be restored within the specified Completion Time of 72 hours, Condition G must be entered, which requires the plant to be in Mode 3 within 6 hours and in Mode 5 within 36 hours. The principal, proposed change to Required Action B.4 is to provide an alternative Completion Time that permits an extended DG allowed outage time of 108 hours (4½ days), in comparison to the lone Completion Time of 72 hours currently specified in Required Action B.4. This increased AOT or Completion Time would be applicable only on a once-per-cycle basis for each DG, and would be applicable only for the performance of voluntary, planned maintenance activities, as further described in Subsections 2.1 and 4.1 of this attachment. The existing 72-hour Completion Time would still be retained and would apply in the same manner that it currently applies. Thus, there would be two Completion Times specified for Required Action B.4 such that either the existing 72-hour Completion Time would apply OR the extended 108-hour Completion Time would apply (subject to the applicable provisions), depending on why the Required Action is entered.

The proposed DG AOT extension (from 72 hours to 108 hours) is based on the methodology provided in Westinghouse Owners Group (WOG) Topical Report WCAP-15622, "Risk-Informed Evaluation of Extensions to AC Electrical Power System Completion Times," and as addressed in Industry/Technical Specification Task Force (TSTF) Standard Technical Specification (STS) change TSTF-417, "AC Electrical Power System Completion Times (WCAP-15622)," (Revision 0).

1.2 Elimination of "Second" Completion Times

Changes to the Callaway Technical Specifications are also being proposed to incorporate the changes addressed in TSTF-439, "Eliminate second Completion Times limiting time from Discovery of Failure to meet an LCO," (Revision 1), the intent of which is to eliminate the Completion Time that was established for certain Required Actions in order to limit the total time allowed for any combination of Conditions of inoperability during any single continuous failure to meet the Limiting Condition for Operation (LCO).

Of the several Technical Specifications that specify Operability requirements for systems having redundant, required equipment (e.g., pumps) or equipment trains, all address the condition of having a pump or train inoperable, and accordingly specify a Required Action with a Completion Time for restoring the inoperable pump or train to OPERABLE status. However, many of these Technical Specifications involve a second Completion Time that was established to limit the total amount of time that an applicable LCO is not met when, for example, one train is declared inoperable and then the second train becomes inoperable as the first train is being restored. This Completion Time was included to establish a limit on the maximum time allowed for any combination of Conditions of inoperability during any single continuous failure to meet the LCO. The intent was to preclude entry into and out of the ACTIONS for an indefinite period of time by providing a limit on the amount of time that the LCO is not met for a multiple/sequential combination of inoperabilities. This "second" Completion Time was derived by adding or considering the individual Completion Times associated with the affected Required Actions. Such Completion Times are triggered "from discovery of failure to meet the LCO" (instead of when a pump or train was successively declared inoperable).

TSTF-439 (Rev. 1) addresses these "second" Completion Times and provides justification for eliminating them in light of the controls and system performance objectives required for compliance with the Maintenance Rule (10CFR50.65). Since TS 3.8.1 Required Action B.4 includes a "second" Completion Time, it is affected by this change, in addition to being affected by the (AOT/Completion Time extension). Elimination of the "second" Completion Time affects several other Technical Specifications, as identified below (in Section 2.2)

2.0 PROPOSED CHANGES

The specific changes to the Callaway Technical Specifications for each of the changes described above are identified as follows.

2.1 Extension of Completion Times for an Inoperable Diesel Generator

To increase the Completion Time allowed for restoring an inoperable DG, the following change is requested:

- For Required Action B.4 of TS 3.8.1, change the specified Completion Time from "72 hours" to "72 hours OR 108 hours once per cycle for each DG."

This "OR" form of the Completion Time(s) means that only one of the two Completion Times applies at a time, i.e., either the 108-hour Completion Time which is allowed only once per cycle for each DG (as analyzed per WCAP-15622 to support on-line maintenance under the extended DG AOT), or the retained 72-hour Completion Time which applies in the same manner that it currently applies. This change is further explained and justified in Section 4.

2.2 Elimination of "Second" Completion Times

Consistent with TSTF-439, Revision 1, the following changes are requested for the affected Technical Specifications:

- For TS 1.3, "Completion Times," delete Example 1.3-3 (and text referring to this example), since this example specifically addresses "second" Completion Times. [The subsequent examples in TS 1.3 (i.e., 1.3-4 through 1.3-7) are to be renumbered (as 1.3-3 through 1.3-6, respectively) due to deleting Example 1.3-3.]
- For TS 3.6.6, "Containment Spray and Cooling Systems," delete the specified Completion Time of "10 days from discovery of failure to meet the LCO" for Required Actions A.1 (for an inoperable containment spray train) and C.1 (for an inoperable containment cooling train).
- For TS 3.7.5, "Auxiliary Feedwater (AFW) System," delete the specified Completion Time of "10 days from discovery of failure to meet the LCO" for Required Actions A.1 (for an inoperable steam supply to the turbine-driven AFW pump), B.1 (for an inoperable ESW supply to the turbine-driven AFW pump) and C.1 (for an AFW train inoperable for other reasons).
- For TS 3.8.1, "AC Sources – Operating," delete the specified Completion Time of "6 days from discovery of failure to meet LCO" for Required Actions A.3 (for an inoperable offsite circuit) and B.4 (for an inoperable DG). (Note: The latter is the same Required Action affected by the DG AOT change described in Section 2.1 above.)
- For TS 3.8.9, "Distribution Systems – Operating," delete the specified Completion Time of "16 hours from discovery of failure to meet LCO" for Required Actions A.1 (for an inoperable AC electrical power distribution subsystem), B.1 (for an inoperable AC vital bus subsystem) and C.1 (for an inoperable DC electrical power distribution subsystem).
- For all of the above, delete the logical "AND" connectors in the Completion Time column of each affected Technical Specification, as needed, due to deletion of the noted Completion Times.

As noted previously, all of the above changes are reflected on the marked-up and revised TS pages provided in Attachments 3 and 4, respectively.

In addition to the above, the associated TS Bases will be revised to reflect and support the proposed TS changes. A marked-up copy of the proposed TS Bases changes is provided in Attachment 5 for information only. The TS Bases changes will be implemented in accordance with TS 5.5.14, "Technical Specifications (TS) Bases Control Program," as part of the implementation of this amendment after NRC approval.

3.0 BACKGROUND

Background information for supporting review of the proposed DG AOT extension is provided in Section 3.1 below. This includes a description of the Class 1E alternating current (AC) power system at Callaway (Subsection 3.1.1), information concerning the development and applicability of WCAP-15622 and TSTF-417 (Subsection 3.1.2), and identification of another license amendment request from AmerenUE that is related to this request (Subsection 3.1.3). Background information related to the proposed elimination of "second" Completion Times, including the development and applicability of TSTF-439, is provided in Subsection 3.2. The information and discussion provided therein is focused on how the TSTF-439 changes interface with the WCAP-15622/TSTF-417 changes.

3.1 Extension of Completion Time for an Inoperable Diesel Generator

3.1.1 Description of Class IE AC Power System at Callaway

A general description of Callaway's onsite Class 1E/Engineered Safety Features (ESF) power system, including a simplified diagram of the system, is included in WCAP-15622, but a more detailed description (and figure) is provided herein.

The onsite power system for Callaway is provided with preferred power from the offsite system through two independent and redundant sources of power in accordance with 10 CFR 50, Appendix A, General Design Criterion (GDC) 17. With respect to the safety-related (Class 1E) power supply configuration, one preferred circuit from the switchyard supplies power to a multi-winding startup transformer, one winding of which feeds a 13.8/4.16-kV ESF transformer (equipped with an automatic load tap changer (LTC) and its associated capacitor bank). The second preferred (offsite) circuit supplies power from the switchyard via a safeguards transformer to the second 13.8/4.16-kV ESF transformer (also equipped with an automatic load tap changer (LTC) and its associated capacitor bank).* Each ESF transformer supplies power to an associated Class 1E 4.16-kV bus. For each safety-related bus normally fed by its associated ESF transformer, the capability exists for either bus to be ultimately supplied via the other preferred source connection.**

The onsite power system is generally divided into two load groups. Each load group consists of an arrangement of buses, transformers, switching equipment, and loads fed from a common power supply. Power is supplied to loads at 13.8 kV, 4.16 kV, 480 V, 480/277 V, 208/120 V, 120 VAC, 250 VDC, and 125 VDC. The class 1E AC system loads are accordingly separated into two load groups which, as noted above, are powered from separate ESF transformers. Each

* The switchyard, it should be noted, is supplied by two transmission line rights-of-way which approach the plant from different locations, pursuant to GDC 17.

** The startup and ESF "A" transformers are each sized to carry both load groups if required. Flexibility in connection capability is provided such that each Class 1E 4.16-kV bus can be supplied via the other's normal offsite source connection. This requires manual action, however, since there is no automatic connection between redundant load groups, i.e. between the Class 1E 4.16-kV buses.

load group has power distributed by a 4.16-kV bus (NB01 or NB02), 480-V load centers, and 480-V motor control centers. Each load group is independently capable of safely bringing the plant to a safe shutdown condition, as the Class 1E electrical power distribution system is designed to satisfy the single-failure criterion.

The onsite standby power system includes Class 1E AC and DC power supply capability for equipment used to achieve and maintain a cold shutdown of the plant and to mitigate the consequences of a design basis accident (DBA). With respect to Class 1E AC power, each of the two Class 1E load groups, at the 4.16-kV bus level, is capable of being powered from an independent diesel generator (one per load group) which functions to provide power in the event of a loss of the preferred power source. Undervoltage relays are provided for each 4.16-kV bus to detect an undervoltage condition and automatically start the diesel generator in response to such a condition.*** The Class 1E DC system includes four separate 125-VDC battery supplies for Class 1E controls, instrumentation, power, and control inverters.

A simplified one-line diagram of the electrical power distribution system described above is provided on Figure 1 on the next page (i.e., page 7). As can be seen from the figure, and as described above, each of the two 4.16-kV Class 1E buses is normally supplied by its preferred (offsite) power source (via its respective ESF transformer) and is capable of being exclusively supplied by its associated diesel generator (as there is no automatic connection between the redundant load groups.)

In the event of a loss-of-coolant accident (LOCA) and/or loss of offsite power (LOOP), the starting (or shedding and restarting) of Class 1E electrical loads is controlled by the load shedder emergency load sequencers (LSELS) (one for each 4.16 kV bus). In the event of a LOCA with preferred (offsite) power available to the 4.16-kV Class 1E bus(es), Class 1E loads are started in programmed time increments by the load sequencer(s). The associated DG(s) will be automatically started but not connected to the bus. However, in the event that preferred (offsite) power is lost, the load sequencer will function to shed selected loads and automatically start the associated standby diesel generator (via the DG control circuitry). The load sequencer(s) will function to start the required Class 1E loads in programmed time increments.

3.1.2 WCAP-15622 Program and TSTF-417

AmerenUE's evaluation of the proposed, extended Completion Time (CT) for an inoperable DG was completed as part of a cooperative effort under the Westinghouse Owners Group (WOG). Member utilities/plants sought to work together in that forum to evaluate several AC electrical power system TS CT changes as part of a larger program that was established for the evaluation of CT extensions, including those for fluid systems, DC power systems and containment isolation valves. The effort was motivated by the recognition that current CTs specified in the Technical Specifications are, in some cases, insufficient to respond to operability problems and perform maintenance activities at power. It was recognized that, through probabilistic

*** Operability requirements for the undervoltage relays are specified in TS 3.3.5, "Loss of Power (LOP) Diesel Generator (DG) Start Instrumentation." Loss-of-voltage and degraded-voltage protection functions are provided for each bus.

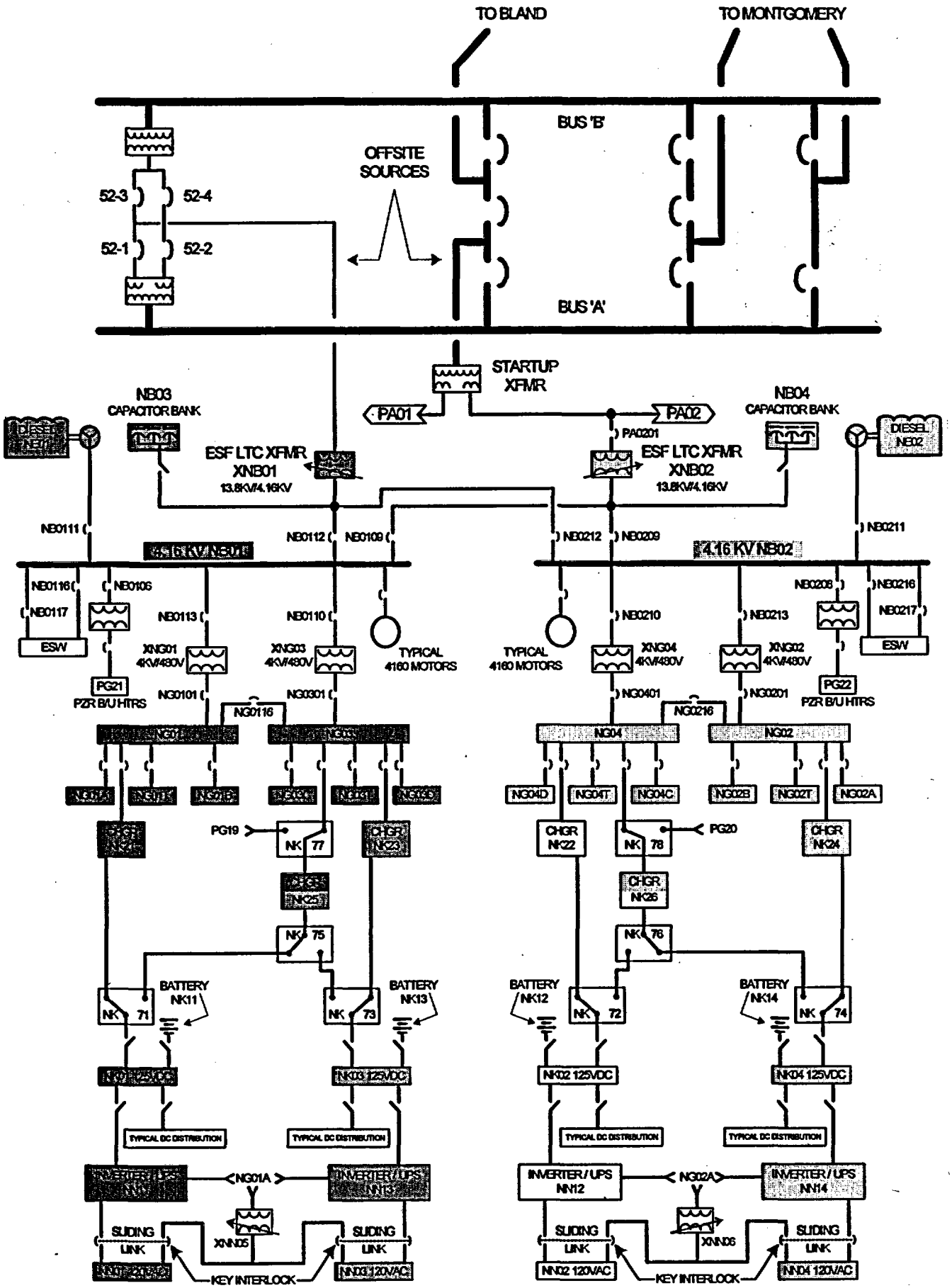
TO BLAND
TO MONTGOMERY
BUS 'B'
BUS 'A'
OFFSITE SOURCES
52-3
52-4
52-1
52-2
STARTUP XFMR
PA01
PA02
PA0201
NB03 CAPACITOR BANK
NB04 CAPACITOR BANK
DIESEL NB01
DIESEL NB02
ESF LTC XFMR XNB01 13.8KV/4.16KV
ESF LTC XFMR XNB02 13.8KV/4.16KV
NB0111
NB0112
NB0109
NB0212
NB0209
NB0211
4.16 KV NB01
4.16 KV NB02
NB0116
NB0117
NB0106
NB0113
NB0110
NB0210
NB0213
NB0208
NB0216
NB0217
ESW
XNG01 4KV/480V
XNG03 4KV/480V
XNG04 4KV/480V
XNG02 4KV/480V
TYPICAL 4160 MOTORS
PG21 PZR B/U HTRS
PG22 PZR B/U HTRS
NG0101
NG0301
NG0401
NG0201
NG0116
NG0216
NG04
NG02
NG04D
NG04T
NG04C
NG02B
NG02T
NG02A
PG19
PG20
CHGR NK22
CHGR NK23
CHGR NK24
CHGR NK25
CHGR NK26
NK 77
NK 78
NK 75
NK 76
NK 71
NK 73
NK 72
NK 74
BATTERY NK11
BATTERY NK13
BATTERY NK12
BATTERY NK14
NK02 125VDC
NK03 125VDC
NK04 125VDC
TYPICAL DC DISTRIBUTION
INVERTER/UPS NN12
INVERTER/UPS NN13
INVERTER/UPS NN14
NG01A
NG02A
XNN05
XNN06
SLIDING LINK
NN02 120VAC
NN03 120VAC
NN04 120VAC
KEY INTERLOCK

risk assessment, a more risk-informed approach could be taken to justify more appropriate, extended CTs.

Although a WOG program was established for this effort, it was recognized that plant-specific evaluations would be needed. The thrust of the WOG program was to develop a common methodology and establish a means for providing cross comparisons between plant-specific results and designs. Licensing Topical Reports were thus developed to obtain NRC approval of the methodology and thereby facilitate NRC review and approval of individual license amendment requests (LARs) from each of the participating member utilities/plants. WCAP-15622, "Risk-Informed Evaluation of Extensions to AC Electrical Power System Completion Times," was developed from this effort, and is the topical report prepared specifically for evaluating CT extensions for AC electrical power systems, including the standby/emergency diesel generators. The approach taken (per this and the other topical reports prepared for CT extensions) is consistent with the NRC's approach for using probabilistic risk assessment in making risk-informed decisions with regard to plant-specific changes to the current licensing basis. This approach is discussed in Regulatory Guide 1.174, "An Approach for Using Probabilistic Risk Assessment in Risk-Informed Decisions on Plant-Specific Changes to the Licensing Basis," and (with particular regard to CT extensions) in Regulatory Guide 1.177, "An Approach for Plant-Specific, Risk-Informed Decision making: Technical Specifications."

WCAP-15622 addresses a number of CT extensions specified in the Limiting Conditions for Operation (LCOs) of the Technical Specifications related to AC electrical power systems. Specifically, CT extensions for the following are addressed:

1. In TS (LCO) 3.8.1, "AC Sources – Operating," upon declaring a DG inoperable,

   - The CT for determining that an operable DG is not rendered inoperable due to a common cause failure, or for performing SR 3.8.1.2 on the operable DG, per Required Action B.3.1 or B.3.2, respectively;

2. Also in TS 3.8.1, upon declaring a DG inoperable,

   - The CT for restoring the inoperable DG to Operable status;

3. In TS (LCO) 3.8.9, upon declaring an AC vital bus inoperable,

   - The CT for restoring the inoperable bus to Operable status.

A Standard Technical Specification Traveler has been developed by the Industry's Technical Specification Task Force (TSTF) to support the above changes addressed by WCAP-15622. This traveler, TSTF-417, "AC Electrical Power System Completion Times (WCAP-15622)," Revision 0 is still under review by the NRC staff. Since the changes proposed by AmerenUE for the DG AOT/CT extension are consistent with WCAP-15622, the changes are consistent with TSTF-417 as well.

Due to differences in plant designs, needs, and resources, it should be noted that not all of the above changes are being pursued by each participating plant or utility. For Callaway, only the

second change identified above, i.e., increasing the CT for restoring an inoperable DG to Operable status, was selected for evaluation and submittal for NRC approval at this time.

It should also be noted that following submittal of WCAP-15622 (Rev. 0) to the NRC in June 2001 (Reference 1), the NRC staff issued two requests for additional information (RAIs) (References 2 and 3) in January 2002 regarding the topical report. Responses to both of the NRC's RAI letters were subsequently provided by the WOG via Letter OG-02-052, dated November 27, 2002 (Reference 4).

In the WOG's response to the NRC requests, each individual request or question contained in the NRC's letters was assigned an RAI number, and the RAIs were categorized into groups based on the subject and type of response required. It was identified that some of the RAIs would require plant-specific responses or additional plant-specific information, and that the participating plants/utilities would provide this information in their individual license amendment requests (LARs). Accordingly, responses and information specific to Callaway are provided in Attachment 2 of this LAR.

3.1.3 Related License Amendment Request (LAR) OL-1228

By letter ULNRC-04837 dated June 6, 2003 AmerenUE submitted an LAR (No. OL-1228) that also revises Technical Specifications related to the diesel generators (DGs). The changes proposed per that LAR, which are currently under review by the NRC staff, would eliminate or modify the Mode restrictions that are currently imposed on many of the SRs specified in the Technical Specifications for the DGs.

As described in Attachment 1 to ULNRC-04837, the testing, monitoring and inspection activities required by all of the various SRs specified under TS 3.8.1 for the DGs are required to be performed on a periodic basis, but in some cases they may also be performed to verify or re-establish DG OPERABILITY following repairs or other unanticipated corrective maintenance. Under the current Technical Specifications, testing per some of the DG SRs is allowed to be performed during any plant Mode; however, many of the SRs contain the provision, in the form of a Note included with each affected SR, that the surveillance is not to be performed during certain plant Modes (in most cases, during plant operation). The changes proposed per OL-1228 would modify such Mode restrictions by revising or removing the Note associated with each applicable SR to either completely remove the MODE restrictions for the affected surveillance, or conditionally allow the surveillance to be performed (or partially performed) during currently prohibited MODES following corrective maintenance.

Two types of changes are thus proposed per OL-1228:

1. The MODE 1 and 2 restrictions currently specified for the following SRs would be completely removed: SR 3.8.1.10 (full load rejection test), SR 3.8.1.13 (protective-trip bypass test), and SR 3.8.1.14 (endurance and margin test). The changes would thus allow these DG surveillances to be performed periodically and/or following planned or unplanned maintenance, during any plant Mode.

2. For the remaining applicable DG SRs, the associated Notes that currently impose Mode restrictions would be modified to allow performance or partial performance of the

affected surveillances during plant operation but only in order to re-establish OPERABILITY following corrective maintenance, corrective modification, deficient or incomplete surveillance testing, or other unanticipated OPERABILITY concerns during plant operation. The DG SRs affected by these changes are as follows: SR 3.8.1.11 (loss-of-offsite-power test), SR 3.8.1.12 (safety injection actuation signal test), SR 3.8.1.16 (synchronizing test), SR 3.8.1.17 (test mode change-over test), SR 3.8.1.18 (load sequencing test), and SR 3.8.1.19 (combined safety injection actuation signal and loss-of-offsite-power test). These changes are being proposed consistent with NRC-approved Industry/Technical Specification Task Force (TSTF) Standard Technical Specification (STS) change TSTF-283, Revision 3.

The above changes are similar, the main difference being that the allowance for performing the affected SRs during plant operation would be conditional for the second set of changes, while it would be unconditional for the first set. In effect, the changes would permit SRs 3.8.1.10, SRs 3.8.1.13 and 3.8.1.14 to be scheduled for routine performance (or to be performed for post-maintenance testing) during plant operation. The remaining affected SRs would continue to be scheduled for their routine performance during plant outages, except that they could be considered for performance (or partial performance) during plant operation if required to verify DG OPERABILITY following unanticipated corrective maintenance.

In other words, by removing the Mode restrictions that completely prohibit the performance of the affected SRs during plant operation, the changes proposed per OL-1228 provide the flexibility to schedule a surveillance test like SR 3.8.1.14 for its routine performance during plant operation, or to perform such a surveillance for verifying operability following on-line maintenance. Thus, although the scheduled performance of a routine surveillance (on-line) would most likely continue to be performed under the 72-hour Completion Time of Required Action B.4, the proposed, extended DG AOT provides additional time for including the performance of SRs (on-line) that may be needed for post-maintenance testing in the time period scheduled for on-line maintenance. In this regard, the proposed DG AOT change supports (or is supported by) the changes proposed per OL-1228.

LAR OL-1228 also provides additional information and details regarding the design and operation of the DGs at Callaway, including a description of how testing that would be allowed to be conducted during plant operation is expected to be conducted and how a DG would respond to an emergency demand or a protective trip during the performance of such testing.

3.2 Elimination of Second Completion Times

Interface Between TSTF-439 and WCAP-15622/TSTF-417 Changes

WCAP-15622 was submitted to the NRC for review in June 2001. As already noted, the report justifies extending the Required Action Completion Times (AOTs) for certain AC electrical power systems/components, based on plant-specific probabilistic risk analyses. As such, the extended AOTs are based on a risk-informed approach. This is contrast to the generic CTs currently specified in the [Improved] Standard Technical Specifications (STS), which are "deterministically" based, i.e., based primarily on engineering judgment including, for example, consideration of the Operability of redundant systems, trains or components and qualitative

consideration of the low probability of an event (accident) occurring while the CT/AOT is in effect.

As noted in Section 1.2, most of the Required Actions affected by the WCAP-supported AOT/CT extensions each contain a second Completion Time for limiting the overall time that the associated LCO may not be not met from initial entry into a Condition when, for example, one train or component is declared inoperable, and then the Condition (or another Condition) is entered again due to a second train or component being declared inoperable, contiguous with the first inoperability, and so on. Like the current or initial system/component AOTs, these "second" Completion Times are also deterministically based. These second Completion Times, however, must be considered when extending a component or system AOT. Extending the system/component AOTs necessitates revising the second Completion Times because, otherwise, the second Completion Times could be more limiting than the extended AOTs and thus would negate the effect of the extended AOTs.

As originally proposed by participants in the WCAP-15622 program, the second Completion Times would be extended (to accommodate the extended AOTs) by simply adding the CT currently specified in the TS to the new, extended CT/AOT. In November 2001, however, the NRC transmitted a letter to NEI discussing their concern regarding this approach, as identified during their review of WCAP-15622/TSTF-417 (Revision 0) and the comparable Topical Report submitted by the CE Owners Group [i.e., CE NSPD-1045, "Joint Applications Report, Modification to the Containment Spray System, and the Low Pressure Safety Injection System Technical Specifications" (TSTF-409)]. Specifically, the NRC indicated that proposed increases in the STS Completion Times that are *based on adding together risk-informed and deterministic values* using engineering judgment would not be approved.

In light of this concern, a different approach has been taken, as described in TSTF-439, Revision 1. In particular, it recognizes that conformance to the Maintenance Rule provides a basis for eliminating the applicable second Completion Times altogether from the Technical Specifications. That is, the performance requirements imposed on plant systems for implementing the Rule require system availabilities to be sufficiently high such that repeated entry into TS Actions (due to system/equipment inoperabilities) would not be conducive to meeting the system performance requirements. Thus, there is no need to have the TS impose a CT that limits repeated or contiguous entries into the Required Actions of an applicable Technical Specification, i.e., "for any combination of Conditions of inoperability during any single continuous failure to meet the LCO," because conformance to the Rule imposes reasonable limits for such concerns. Since the Maintenance Rule is relatively new, it provides a basis that may not have been fully considered when the "second" Completion Times were originally established in the STS.

Elimination of the second Completion Times, as justified by TSTF-439 on the above basis, obviates the question of what to do with such a Completion Time when a component or system AOT/CT in the same affected Technical Specification is to be extended (such as per WCAP-15622/TSTF-417). That is, elimination of the second Completion Times should resolve the NRC's concern for extending any second Completion Time based on adding a deterministically-based Completion Time to a risk-informed, extended AOT/CT. It also simplifies the Technical Specifications by reducing the number of CTs to be specified in each TS affected by the changes

addressed in WCAP-15622. For these reasons, it is most efficient to pursue the changes addressed by WCAP-15622 (TSTF-417) and TSTF-439, Revision 1, together.

4.0 TECHNICAL ANALYSES

4.1 Extension of Completion Time for an Inoperable Diesel Generator (TSTF-417)/ WCAP-15622

4.1.1 Traditional/Deterministic Considerations

Traditional or deterministic considerations that apply to evaluation of the DG AOT extension and its impact on risk include the following.

Impact on Defense-in-Depth and Safety Margins

Section 7 of WCAP-15622 addresses the potential impact of the DG AOT extension on defense-in-depth for the plant as well as any safety margins. Without repeating details here, the report addresses the fact that the DG AOT extension does not involve any design or physical changes to the facility. Further, the extension is not great enough to assume that overall DG availability is significantly affected or to conclude that the assumptions in the plant's safety analysis regarding DG availability are affected. No new failure mechanisms are introduced by the proposed change, and design assumptions regarding diversity and the independence of barriers are maintained. Additionally, no safety analysis acceptance criteria are affected. Thus, the DG AOT extension does not have any significant impact on the plant's safety margins.

Section 7.1 of the report also gives consideration to the potential impact of performing DG maintenance activities on line. It notes that on-line DG maintenance activities would not be expected to lead to any new transient events and that, conversely, the increased on-line AOT is more conducive to properly-performed, on-line maintenance with a reduced likelihood of system realignment and reassembly errors, as it also permits more time to complete troubleshooting if required. Further, performing DG maintenance on-line (instead of during shutdown conditions) may also reduce shutdown risk. The report also notes that maintenance practices to be followed when removing a DG from service (as further discussed below and in Section 4.1.2) will ensure that multiple systems are not out of service, so that barriers protecting the public will be maintained.

Traditional Practices for Performing On-line Maintenance

The performance of a limited amount of on-line maintenance and testing is a long-established practice at Callaway. With regard to how equipment within each of the two, redundant safety trains or systems is subject to such maintenance, train or system outages are routinely scheduled on a periodic, alternating basis in order to perform required preventive maintenance, for example, on pumps, valves, and other components within each train. Such activities are scheduled and completed on a per-train basis so that all activities affecting the same train or system are performed in a coordinated manner and as efficiently as possible for that train or system in order to minimize its overall system/train out-of-service time, and yet ensure that only one of the two essential equipment trains or separation groups is impacted at a time. Under the process that has evolved at Callaway, since even before implementation of the Maintenance

Rule, the train that is not subject to maintenance is placed in a "protected" status while the maintenance-affected system or train is removed from service. Under such conditions, no elective work activities are allowed that would impact the Operability of the protected train. This same approach to maintaining barriers would be applied to the performance of on-line DG maintenance under the extended AOT. In fact, additional restrictions would be implemented for performing DG on-line maintenance, as further discussed in Subsection 4.1.2.2.

4.1.2 Assessment of Impact on Risk: Evaluation Using RG 1.177 Three-Tier Approach

The effect on risk of the proposed increase in Completion Time for restoration of an inoperable DG during plant operation has been evaluated using the NRC's three-tier approach suggested in RG 1.177*:

Tier 1 – PRA capability and insights
Tier 2 – Avoidance of risk-significant plant configurations, and
Tier 3 – Risk-informed configuration risk management.

Each of these three aspects is addressed as follows.

4.1.2.1 Tier 1: Approach to the Evaluation

Tier 1 of the approach recommended in RG 1.177 addresses probabilistic safety assessment insights, including risk analyses and sensitivity analyses to support changes to system or component Completion Times. This aspect was addressed the most by WCAP-15622 since the report established the methodology to be used by member utilities for performing their plant specific analyses, and it provided the means for presenting and comparing the results obtained from those analyses. Details concerning the approach were provided in the report.

Callaway Analysis Results

The plant-specific analysis performed for Callaway was done in accordance with the methodology presented in WCAP-15622, and the results obtained for Callaway are presented in Section 8.2.3.1 of the WCAP report. However, a number of changes were made to the analysis subsequent to submittal of the report. The first significant set of changes was made in response to the noted RAIs received from the NRC in January 2002 (References 2 and 3), especially RAI 8. In this particular RAI, the NRC noted that the ΔCDF and ICCDP values obtained from the plant analyses, as shown in Tables 8-1, 8-5 and 8-6 of WCAP-15622, are not consistent with the criteria of Regulatory Guides 1.174 and 1.177. The WOG responded (per Reference 4) that not all of the results presented in the WCAP differ substantially from the Regulatory Guide acceptance guidelines. Nevertheless, and as stated in the WOG response, participating utilities agreed to make some changes to their analyses. The changes that were made include the incorporation of some restrictions or additional assumptions to effectively reduce the loss-of-offsite power (LOSP) frequency used in the analyses. These included restricting access to the

* Note: Although RG 1.177 requires the evaluation of the proposed change on the total risk (i.e., on-line and shutdown risk), the DG AOT extension was quantitatively evaluated for on-line risk. This is conservative, however, since it would be expected that shutdown risk will be reduced due to the increased availability of the DGs during shutdown due to this change.

switchyard, allowing no concurrent activities in the switchyard, and entering into on-line DG maintenance under low-risk times or periods with regard to weather conditions.

With the reduced LOSP frequency, it was noted that longer DG AOTs could be justified with analysis results that more than met the Regulatory Guide acceptance criteria. An even longer AOT could be justified, in some cases, if the extended DG AOT was restricted such that it would be applicable only for voluntary, planned maintenance activities. This resulted in the "split"-CT format that is being sought by some licensees (including AmerenUE/Callaway) wherein the extended CT would apply only for planned DG maintenance under the extended, PRA-based AOT, and the existing 72-hour CT would apply in the same manner that it currently applies (e.g., for unexpected equipment/component failures or limited on-line maintenance). On this basis, an extended at-power, planned DG maintenance AOT of 11 days was contemplated for Callaway, as specifically acknowledged for Callaway in the response to RAI 8, in Reference 9.

More recently, however, in preparation of the LAR for Callaway, further self-review of the Callaway analysis and PRA identified some changes needed to eliminate inconsistencies or remove non-conservative assumptions in the analysis, including re-evaluation of the offsite power recoverability for station blackout conditions. These changes also involved the incorporation of an additional restriction to allow no other significant equipment to be out-of-service upon entering into the extended DG AOT to perform planned maintenance. These changes resulted in a re-evaluation of the extended DG AOT for Callaway such that a DG AOT of 4½ days, i.e., 108 hours, is now being requested for performing voluntary planned, on-line DG maintenance activities.

The extended DG AOT is therefore based on the following conditions or restrictions:

(1) The extended DG AOT is to be used only for the performance of voluntary, planned maintenance activities.

(2) No elective maintenance within the switchyard is to be permitted when performing DG maintenance under the extended DG AOT. This includes restricting access to the switchyard during that time.

(3) No other significant plant equipment must be out-of-service when commencing on-line, planned DG maintenance under the extended DG AOT. (See Subsection 4.1.2.2 for further details regarding this restriction.)

Note: Some of the changes made to Callaway's analysis are further discussed in Attachment 2, where Callaway's plant-specific responses to the applicable RAIs are provided.

It should be noted that within WCAP-15622 a table was included (i.e., Table 8-2) that provides a summary of the important assumptions and modeling features in the plant-specific PRA models. Based upon the revised PRA analysis supporting this license amendment request, the values of the parameters listed for Callaway in that table have been revised. The revised values are provided in the table that follows:

Revised Callaway Values for WCAP-15622 Table 8-2

Parameter	Callaway Value
DG fail to start (per demand)	6.59E-3
DG fail to run (per hour)	3.40E-3
DG mission time (hours)	2 or 8, depending on SBO sequence.
DG common cause failure model	Beta factor
DG fail to start common cause failure probability (per demand)	2.06E-4
DG fail to run common cause failure probability	1.08E-3 (based on 8-hour mission time)
Loss of offsite power initiating event frequency (per year)	1.95E-2 (base value); 1.56E-2 (with switchyard restrictions in place for planned DG maintenance)

As can be seen from comparison of the loss of offsite power (LOOP) frequencies above, to that in Table 8-2 of the WCAP (i.e., 3.9E-2 per year), reduced LOOP frequencies are used in the PRA analysis supporting this license amendment request. The reduction in LOOP frequencies used in the current analysis, as compared to that used in the WCAP-supporting analysis, is primarily due to the use of Bayesian updating. That is, mean industry LOOP frequencies were Bayesian updated with Callaway-specific experience (from which there have been no losses of offsite power). Also, in the table above, the reduction in the LOOP frequency with switchyard restrictions in place, over the base value, is due to removal of LOOP events, from the industry mean, which involved switchyard activities, as these events could not occur with switchyard restrictions in place.

The following, current PRA results support a Callaway DG AOT of 4½ days using the revised values in the table above:

Risk Metric	Callaway Value w/4.5-day CT	NRC Acceptance Criterion
ICCDP	4.95E-7	5E-7
ΔCDF (yr^{-1})	6.99E-7	1E-6
ICLERP	1.31E-9	5E-8
ΔLERF (yr^{-1})	1.85E-9	1E-7

It can be seen that the new ΔCDF and ICCDP values (as revised from those presented in Table 8-1 of WCAP-15622) are all within the corresponding NRC acceptance criteria.

Conclusion

Notwithstanding the noted changes, the plant-specific analysis that was performed for Callaway remains consistent with the approach described in the WCAP, and the conclusion supported by WCAP-15622 remains valid for supporting an extended DG AOT/CT of 108 hours when used for the purpose of performing planned, on-line DG maintenance at Callaway. The above-noted

results obtained for Callaway demonstrate that the risk of performing DG on-line maintenance at power under an extended AOT of 4-1/2 days is acceptably small.

Since the analysis was based on the assumption of one such AOT for each DG per cycle, the extended AOT is to be specified as such in the Callaway Technical Specifications [i.e., "once per cycle for each DG"], as described in Section 2.1 and as reflected in the marked-up and revised Technical Specification provided in Attachments 3 and 4, respectively.

It should be noted that, as suggested previously, the analysis performed for supporting on-line DG maintenance (under the extended AOT) does not take into account the risk averted by moving such activities from shutdown modes to plant operation. Although the results obtained from the evaluation demonstrate that the risk of performing DG on-line maintenance under the extended AOT is acceptably small, the analysis is conservative with respect to an assessment of overall risk since reduced shutdown risk would contribute to a reduction in the overall risk associated with the proposed change. Section 8.2.6 of the WCAP addresses this point, and provides further discussion about how moving DG maintenance activities out of shutdown conditions constitutes a reduction in shutdown risk. A quantitative assessment of this reduced risk is provided in the WCAP using the shutdown PRA model for Comanche Peak. As noted in the WCAP, the results of that analysis are considered to be generally applicable to all of the participating plants, and therefore this conclusion is supported for Callaway as well.

4.1.2.2 Tier 2: Avoidance of Risk-Significant Plant Configurations

There is reasonable assurance that risk-significant plant equipment configurations will not occur when a DG is removed from service to perform on-line maintenance and testing under the proposed TS changes. This assurance is provided by existing TS requirements, but especially by the previously identified restrictions or conditions that will be imposed when the on-line, extended DG AOT is utilized.

Technical Specifications Requirements

Adhering to the Technical Specifications themselves prevents entry into risk significant configurations. The Technical Specifications contain specific requirements for the operability of offsite and onsite power sources. Given that the plant DGs are critical support systems for their respective ESF buses and associated loads, Condition B of TS LCO 3.8.1 includes a Required Action (B.2) which requires that, whenever a DG has been declared inoperable, the "required feature(s) supported by the inoperable DG" must be declared inoperable when "its required redundant feature(s) is inoperable." This prevents having important equipment unavailable on the other train without entering more restrictive LCOs (including TS 3.0.3) when entering Condition B. Thus, except for emergent conditions resulting from equipment failure, it is highly unlikely that these SSCs will be made unavailable during at-power DG unavailability. Even under these unexpected conditions, it is likely that entry into a more restrictive Required Action would be required, i.e., one that requires corrective action to be taken to return equipment to operable status in a short amount of time.

Imposed Restrictions

With regard to the extended DG AOT for performing on-line DG maintenance, imposition of the three aforementioned conditions when utilizing the on-line, extended AOT will ensure that risk-significant conditions are avoided. To repeat, these are as follows:

(1) The extended on-line DG AOT is to be used only for the performance of voluntary, planned maintenance activities.

(2) No elective switchyard maintenance is to be permitted when performing DG maintenance under the extended DG AOT. This includes restricting access to the switchyard during such times.

(3) No equipment or systems assumed to be available in the PRA analysis for supporting the extended DG AOT are removed from service. These systems and equipment are as follows:

- Steam generator atmospheric relief valves
- Main steam isolation valves
- Auxiliary Feedwater system (all three trains)
- Chemical Volume and Control system [i.e., both centrifugal charging pump (CCP) trains]
- Essential Service Water system (both trains)
- Component Cooling Water system (both trains and all four pumps)
- Residual Heat Removal system (both trains)
- High Pressure Coolant Injection (i.e., both safety injection pump trains)

The above restrictions are consistent with analysis assumptions for justifying the extended DG AOT and will ensure that no risk-significant configurations are entered at the onset of performing DG on-line maintenance under the extended DG AOT. If, however, while the 108-hour Completion Time is in effect and one (or more) of the above systems or components is determined or discovered to be inoperable or if an emergent condition affecting DG operability is identified (subsequent to entering Required Action B.4 for on-line maintenance), re-entry into Required Actions B.2 and B.3 would be required, as applicable. In addition, the effect on plant risk would be assessed and any additional or compensatory actions taken, in accordance with the plant's program for implementation of 10 CFR 50.65(a)(4). The 108-hour Completion Time would remain in effect for the DG if Required Actions B.2 and B.3 are satisfied.

4.1.2.3 Tier 3: Risk-Informed Plant Configuration Control and Management

The objective of the third tier is to ensure that the risk impact of out-of-service equipment is evaluated prior to performing any maintenance activity. As stated in Regulatory Guide 1.174, "a viable program would be one that is able to uncover risk-significant plant equipment outage configurations as they evolve during real-time, normal plant operation." The third-tier requirement is an extension of the second-tier requirement, but addresses the limitation of not being able to identify all possible risk-significant plant configurations in the second-tier evaluation.

Programs/procedures are in place at Callaway which serve to address this concern or objective. In particular, APA-ZZ-00315, "Configuration Risk Management Program," and EDP-ZZ-01129, "Callaway Plant Risk Assessment," are an integral part of the work management process at the plant. The Configuration Risk Management Program (CRMP) ensures that configuration risk is assessed (probabilistic – Safety Monitor), and managed, prior to initiating any maintenance activity consistent with the requirements of 10 CFR 50.65(a)(4). The CRMP also ensures that risk is reassessed if an emergent condition results in a plant configuration that has not been previously assessed.

Under the CRMP, and for utilization of the associated Safety Monitor, risk thresholds were established to ensure that average baseline risk is maintained within an acceptable band. When the administrative limit (Safety Monitor in the Yellow Band) is exceeded, compensatory measures are established to reduce risk (limit unavailability time, and implement a contingency plan to restore and/or mitigate the loss of a key safety function).

Risk significant configurations (Safety Monitor in the Red Band) are generally avoided. If a risk significant configuration occurs, immediate actions are taken to protect redundant/diverse SSCs that are relied upon to mitigate events.

4.1.3 Implementation and Monitoring Program

DG reliability and availability are monitored under Callaway's Maintenance Rule program. If the pre-established reliability and/or availability performance criteria for the DGs are exceeded, they are considered for 10 CFR 50.65 (a)(1) actions, requiring increased management attention and goal setting in order to restore their performance (i.e., reliability and availability) to an acceptable level. The performance criteria are risk-informed and, therefore, are a means to manage the overall risk profile of the plant. The actual out-of-service time for the DGs will be minimized with the intent of ensuring that DG availability performance criteria are not exceeded. Both DGs at Callaway are currently meeting their Maintenance Rule performance criteria.

Callaway's Maintenance Rule monitoring program procedure, EDP-ZZ-01128, describes how the plant program complies with the Maintenance Rule in this regard. The procedure provides instructions for scoping, risk significance determination, performance criteria, monitoring, goal setting, and periodic assessment. As part of Callaway's Maintenance Rule Program, actual DG reliability and availability are monitored and periodically evaluated. Under this process, the impact of the proposed extended DG completion time will be monitored.

It may be noted that the Callaway Maintenance Rule program availability performance criteria (i.e., unavailability limits) are, in general, bounded by unavailability values used in the Callaway PRA. For the DGs, the Callaway Maintenance Rule availability performance criterion is more restrictive than that used in the PRA. As noted above, both DGs at Callaway are currently meeting their Maintenance Rule performance criteria. (See Callaway's plant-specific response to RAI 6 in Attachment 2 for additional information.)

4.2 Elimination of "Second" Completion Times (TSTF-439)

As noted in Section 2.2 and in TSTF-439, Revision 1, the intent of the "second" Completion Times currently specified in the STS is to limit the total amount of time that an LCO is not met when a Condition(s) [i.e., its associated Required Action(s)] is entered more than once due to contiguous or overlapping equipment inoperabilities. Notwithstanding these second Completion Times, programs have been established at all nuclear power facilities to comply with the Maintenance Rule. Under these programs, equipment performance goals are established and equipment unavailability is monitored to ensure that equipment availability is maintained above minimum target levels. Excessive equipment outage time, such as would occur through repeated entries into TS Required Actions, is not conducive to meeting these requirements. Conformance to the Maintenance Rule thus obviates the need for the STS-specified "second" Completion Times and provides a basis for their removal, as further explained below.

Applicability of the Maintenance Rule

The final Maintenance Rule, "Requirements for Monitoring the Effectiveness of Maintenance at Nuclear Power Plants," was published by the Nuclear Regulatory Commission (NRC) in the Federal Register (56 Fed. Reg. 31324) as 10 CFR 50.65 on July 10, 1991. The Maintenance Rule became effective July 10, 1996, requiring full implementation by all licensees on that date. The overall objective of this performance-based rule is to ensure that nuclear power plant structures, systems, and components (SSCs) will be maintained so that they will perform their intended function when required.

The scope of the monitoring program specified in paragraph (a)(1) and (a)(2) of 10 CFR 50.65 includes safety related and non-safety related structures, systems, and components, as follows:

(1) Safety related structures, systems, or components that are relied upon to remain functional during and following design basis events to ensure the integrity of the reactor coolant pressure boundary, the capability to shut down the reactor and maintain it in a safe shutdown condition, and the capability to prevent or mitigate the consequences of accidents that could result in potential offsite exposure comparable to the 10 CFR Part 100 guidelines.
(2) Non-safety related structures, systems, or components:
   (i) That are relied upon to mitigate accidents or transients or are used in plant emergency operating procedures (EOPs); or
   (ii) Whose failure could prevent safety-related structures, systems, and components from fulfilling their safety-related function; or
   (iii) Whose failure could cause a reactor scram or actuation of a safety-related system.

The systems associated with the LCOs that contain a second Completion Time in the Technical Specifications are within this defined scope.

10 CFR 50.65 (a)(1) requires each licensee to monitor the performance or condition of SSCs against licensee-established goals to ensure that the SSCs are capable of fulfilling their intended functions. If the performance or condition of an SSC does not meet established goals, appropriate corrective action is required to be taken.

After determining the SSCs that are within the scope of the Maintenance Rule, risk-informed methodologies are used to establish performance-monitoring criteria and thresholds for acceptable SSC operation and condition. Those SSCs that meet these standards are monitored under paragraph (a)(2) of the Maintenance Rule. For SSCs that do not meet these performance criteria, a cause determination is performed and appropriate goals are established commensurate with the SSCs' safety significance. Monitoring the performance of the SSCs against these established performance criteria and goals is intended to provide reasonable assurance that the SSCs are proceeding to acceptable performance and ensures that the objective of preventing failures is appropriately balanced against the objective of assuring acceptable SSC availability.

The performance and condition monitoring activities required by 10 CFR 50.65(a)(1) and (a)(2) would identify if continuous multiple entries into the ACTIONS of the Technical Specifications results in unacceptable unavailability of these SSCs. The effectiveness of these performance monitoring activities and associated corrective actions, is evaluated at least every refueling cycle, not to exceed 24 months per 10 CFR 50.65(a)(3). This aspect of the Maintenance Rule requires adjustments to performance and condition monitoring activities, associated goals, and preventive maintenance activities to ensure that the objective of preventing failures of structures, systems, and components through maintenance is appropriately balanced against the objective of minimizing unavailability of structures, systems, and components due to monitoring or preventive maintenance.

The ongoing monitoring of SSC condition and performance under paragraph (a)(1) and (a)(2), along with the assessments required by paragraph (a)(3) of the Maintenance Rule, assures an effective maintenance program including the identification of any necessary adjustments that should be made to the program. As part of the periodic review, corrective actions taken because of ongoing maintenance activities or goal setting are evaluated to ensure that action was initiated when appropriate and that the action(s) taken resulted in improved performance of the SSC.

Paragraph (a)(4) of the Maintenance Rule requires licensees to assess and manage the risk associated with maintenance activities. Section 11 of NUMARC 93-01, "Industry Guideline for Monitoring the Effectiveness of Maintenance at Nuclear Power Plants," Revision 3, outlines processes to meet this requirement.

Additionally, NEI 99-02, Revision 2, "Regulatory Assessment Performance Indicator Guideline," establishes safety system unavailability criteria for the diesel generators and other systems as a part of the Mitigating Systems Cornerstone. Continuous multiple entries into Required Actions of the affected TS LCOs would be identified as part of the unavailability for these systems.

Based on the above discussions, the concern regarding multiple continuous entries into LCOs would be identified by the associated system unavailability monitoring programs described above, given that all licensees' Maintenance Rule programs include unavailability monitoring for the SSCs included in this evaluation. On this basis, this concern is not required to be resolved through the imposition of "second" Completion Times in the TS. These Completion Times may therefore be eliminated.

5.0 REGULATORY ANALYSIS

5.1 No Significant Hazards Consideration

AmerenUE has evaluated whether or not a significant hazards consideration is involved with the proposed Technical Specification change to extend the allowed out-of-service time for a diesel generator when removed from service for the purpose of performing voluntary, on-line, planned maintenance activities, as well as the changes to eliminate "second" Completion Times from the applicable Technical Specifications. This evaluation focused on the three standards set forth in 10 CFR 50.92, "Issuance of amendment," as discussed below:

1. Does the proposed change involve a significant increase in the probability or consequences of an accident previously evaluated?

Response: No

DG AOT/CT Extension

The proposed change to extend the DG AOT/CT from 72 hours to 108 hours for planned, on-line maintenance does not affect the design of the DGs, the operational characteristics or function of the DGs, the interfaces between the DGs and other plant systems, or the reliability of the DGs. The DGs mitigate the consequences of previously evaluated accidents including loss of offsite power, but as such are not themselves initiators of any previously evaluated accidents. DG allowed outage time is thus not associated with any initiating condition for accidents previously evaluated. The consequences of an accident are independent of the time the DGs are out of service as long as adequate DG availability is assured. The proposed changes will not result in a significant decrease in DG availability, so assumptions regarding DG availability are not impacted. Since the DGs will continue to be capable of performing their accident mitigation function as assumed in the accident analysis, the consequences of accidents previously analyzed are unchanged with respect to the proposed changes.

In addition, to fully evaluate the effect of the proposed DG completion time extension, probabilistic risk assessment methods and a deterministic analysis were utilized. The results of the analyses show no significant increase in core damage frequency or large early release frequency.

Elimination of Second Completion Times

Similar to the above change, the changes to eliminate the "second" Completion Times from the affected Technical Specifications do not affect the design, operational characteristics, or intended functions of the equipment addressed by those Technical Specifications. With no direct effects on that equipment (or any other plant equipment or features), allowed equipment outage times are not associated with any initiating condition for any accident previously evaluated, and therefore would not affect the probability of such accidents. Further, eliminating these Completion Times is not expected to have an adverse effect on the availability of the applicable systems or components because equipment availability performance criteria required for conformance to the Maintenance Rule impose an equivalent or acceptable level of control and management of equipment availability regardless of such Completion Times. As noted above,

the consequences of evaluated accidents are independent of mitigating equipment allowed outage times as long as adequate availability of the equipment is ensured. Since elimination of the second Completion Times has no significant impact on equipment availability (in light of continued, required conformance to the Maintenance Rule), the consequences of accidents previously evaluated are unchanged.

Therefore, the proposed changes do not involve a significant increase in the probability or consequences of an accident previously evaluated.

2. Does the proposed change create the possibility of a new or different accident from any accident previously evaluated?

Response: No.

None of the proposed changes, i.e., neither the DG AOT extension nor the elimination of second Completion Times, involve a change in the design, configuration, or operational characteristics of the plant. No physical alteration of the plant is involved, as no new or different type of equipment is to be installed. The changes do not alter any assumptions made in the safety analyses, and no alteration in the procedures which ensure that the plant remains within analyzed limits is being proposed. As such, no new failure modes or mechanisms that could cause a new or different kind of accident from any previously evaluated are being introduced.

Therefore, the proposed changes do not create the possibility of a new or different accident from any accident previously evaluated.

3. Does the proposed change involve a significant reduction in a margin of safety?

Response: No.

The proposed DG AOT extension and elimination of second Completion Times do not alter the manner in which safety limits or limiting safety system settings are determined. The safety analysis acceptance criteria are not impacted by this change, and the proposed changes will not permit plant operation in a configuration outside the design basis.

Further, with regard to plant risk, the risk assessment performed for the DG AOT extension determined that the quantifiable increase in plant risk is acceptably small. Likewise, for the elimination of second Completion Times, it may be assumed that this change also involves little or no increase in risk on the basis that required, continued compliance with the Maintenance Rule provides adequate controls for maintaining equipment availability regardless of the second Completion Times.

Therefore, the proposed changes do not involve a significant reduction in a margin of safety.

Based on the above evaluation, AmerenUE concludes that the proposed changes present no significant hazards consideration under the standards set forth in 10 CFR 50.92(c), and accordingly, a finding of "no significant hazards consideration" is justified.

5.2 Applicable Regulatory Requirements/Criteria

The proposed Technical Specification change to extend the allowed out-of-service time for a diesel generator removed from service for on-line, planned maintenance has been developed in accordance with the NRC's Safety Goal Policy Statement, Use of Probabilistic Risk Assessment Methods in Nuclear Activities: Final Policy Statement," Federal Register, Volume 60, p. 42622, August 18, 1995, and guidance contained in of RG 1.174, "An Approach for Using Probabilistic Risk Assessment in Risk-Informed Decisions on Plant-Specific Changes to the Licensing Basis," dated July 1998, and RG 1.177, "An Approach for Plant-Specific, Risk-Informed Decision Making: Technical Specifications," dated August 1998. Evaluation of the proposed change has determined that the associated risk is acceptably small, as the acceptance criteria specified in the noted Regulatory Guides are met.
The proposed changes to eliminate second Completion Times have been determined to be acceptable on the basis that conformance to the Maintenance Rule (10 CFR 50.65) will continue to require adequate equipment availability regardless of such Completion Times.

Based on the above, (1) there is reasonable assurance that the health and safety of the public will not be endangered by operation in the proposed manner, (2) such activities will be conducted in compliance with the Commission's regulations, and (3) the approval of the proposed change will not be inimical to the common defense and security or to the health and safety of the public.

6.0 ENVIRONMENTAL CONSIDERATION

AmerenUE has evaluated the proposed TS changes and has determined that the proposed change would change a requirement with respect to installation or use of a facility component located within the restricted area as defined in 10 CFR 20, or would change an inspection or surveillance requirement. However, the proposed amendment does not involve (i) a significant hazards consideration, (ii) a significant change in the types or significant increase in the amounts of any effluent that may be released offsite, or (iii) a significant increase in individual or cumulative occupational radiation exposure. Accordingly, the proposed amendment meets the eligibility criterion for categorical exclusion set forth in 10 CFR 51.22(c)(9). Therefore, pursuant to 10 CFR 51.22(b), no environmental impact statement or environmental assessment need be prepared in connection with the proposed amendment.

7.0 REFERENCES

7.1 References

1. Regulatory Guide 1.174, "An Approach for Using Probabilistic Risk Assessment in Risk-Informed Decisions on Plant-Specific Changes to the Licensing Basis," July 1998

2. Regulatory Guide 1.177, "An Approach for Plant-Specific, Risk-Informed Decision Making: Technical Specifications," August 1998

3. Westinghouse Owners Group Topical Report WCAP-15622, "Risk-Informed Evaluation of Extensions to AC Electrical Power System Completion Times," Non-Proprietary Class 3

4. Industry/Technical Specification Task Force (TSTF) Standard Technical Specification (STS) Change Traveler TSTF-417, "AC Electrical Power System Completion Times (WCAP-15622)," Revision 0

5. Industry/TSTF STS Change Traveler TSTF-439, "Eliminate Second Completion Times Limiting Time from Discovery of Failure to Meet an LCO," Revision 1

6. WOG Letter, R. Bryan to Document Control Desk, "Transmittal of WCAP-15622, 'Risk-Informed Evaluation of Extensions to AC Electrical Power System Completion Times'," OG-01-OG-039, June 15, 2001

7. NRC Letter, D. Holland to G. Bischoff, "Westinghouse Topical Report, WCAP-15622, Rev. 0, "Risk-Informed Evaluation of Extensions to AC Electrical Power System Completion Times, Request for Additional Information (TAC No. 2257)."

8. NRC Letter, D. Holland to G. Bischoff, "Westinghouse Topical Report, WCAP-15622, Rev. 0, "Risk-Informed Evaluation of Extensions to AC Electrical Power System Completion Times," January 15, 2002

9. WOG Letter, R. Bryan to Document Control Desk, "Transmittal of RAI Responses for WCAP-15622, 'Risk-Informed Evaluation of Extensions to AC Electrical Power System Completion Times," OG-02-052, November 27, 2002

10. AmerenUE Letter, R. Affolter to Document Control Desk, "License Amendment Request OL-1228, "Revision to Technical Specification Surveillance Requirements 3.8.1 and 3.8.4," ULNRC-04837, June 6, 2003.

11. 10 CFR 50.65, "Requirements for Monitoring the Effectiveness of Maintenance at Nuclear Power Plants"

12. 10 CFR 50.90, "Application for Amendment of License or Construction Permit"

13. 10 CFR 50.92, "Issuance of Amendment"

14. !0 CFR 50 Appendix A, "General Design Criteria for Nuclear Power Plants":
    - Criterion 17, "Electric Power Systems"
    - Criterion 18, "Inspection and Testing of Electric Power Systems"

7.2 Precedents

The NRC staff has approved similar license amendments for other plants including Nos. 114, 114, 108, and 108 for Byron Station, Units 1 and 2, and Braidwood Stations Units 1 and 2, respectively, on September 1, 2000; No. 141 for Clinton Power Station, Unit 1, on November 8, 2001; and Nos. 150 and 136 for La Salle County Station, Units 1 and 2, respectively, on January 30, 2002.

Plant-Specific Information in Support of Responses to NRC Request for Additional Information Regarding WCAP-15622

Following submittal of the subject Topical Report (WCAP-15622, Rev. 0) by the Westinghouse Owners Group (WOG) in June 2001 (Reference 6 of Attachment 1), the NRC staff issued two requests for additional information (RAIs) (References 7 and 8 of Attachment 1) in January 2002 regarding the topical report. Responses to both of the NRC's RAI letters were subsequently provided by the WOG via Letter OG-02-052, dated November 27, 2002 (Reference 9 of Attachment 1), specifically in Attachments 1 and 2 of that letter, respectively. In the WOG's response to the NRC requests, each individual request or question contained in the NRC's letters was assigned an RAI number. In addition, the RAIs addressed in the WOG letter of Attachment 1 were categorized into groups based on the subject and type of response required, including consideration of which responses would require plant-specific responses or additional plant-specific information, from the participating plants/utilities in their individual license amendment requests (LARs).

As applicable to Callaway (AmerenUE), plant-specific responses and/or additional plant-specific information is required for the Group 3 RAIs (i.e., RAIs 2, 6 and 11) identified in Attachment 1 of the WOG letter, and for RAI 3 of Attachment 2 to the letter. Responses for these RAIs are accordingly provided as follows. The generic WOG responses that were provided for these RAIs in the Attachments of the WOG letter are repeated here for context, as the required plant-specific responses immediately follow those responses.

Note: Due to the similarity between RAI 11 of Attachment 1 of the WOG letter and RAI 3 of Attachment 2 to the WOG letter, these RAIs are addressed together here. The same generic response to both of these RAIs was provided in the WOG letter as well.

<u>RAIs 2 and 6 (per Attachment 1 of WOG Letter OG-02-052)</u>

RAI 2: The staff noted that WCAP-15622 review methodology does not include probabilistic risk assessment (PRA) quality criteria for the evaluation of AC electrical power source Completion Times (CTs). Discuss PRA quality measures, including peer reviews, and how WCAP-15622 addressed individual plant PRA quality for the proposed plants and PRA quality guidance for subsequent plant specific submittals, including those plants not included in WCAP-15622.

WOG Response: The detailed response to this RAI will be provided in each licensee's License Amendment Request (LAR). To address this issue, each licensee requesting the changes proposed in this WCAP, those included in the WCAP and those referencing the WCAP in future LARs, will provide a discussion of the following:

1. Utility's PRA quality program and how it ensures that the model represents the as-built, as operated plant.

2. IPE findings related to the AC systems, and how they were addressed.

3. Peer review findings related to the AC systems, and how they were addressed. If the peer review findings related to the AC power system have not yet been addressed, the possible impact of these findings on the results presented in WCAP-15622 will be discussed.

4. Findings of any other PRA reviews related to the AC systems, and how they were addressed.

Plant-Specific Response: Callaway's response to each of the four items above is as follows:

1. Plant procedures govern Callaway's PRA quality program. Attributes of these procedures, which serve to ensure that the PRA model represents the as-built, as-operated plant, include the following:

   - Screening criteria, contained in the Licensing Impact Review procedure/form, are used by the entire organization for screening of plant changes for potential PRA impact. As a result of this screening, all proposed Technical Specification changes are reviewed by the PRA group for any impact on the PRA model. Those that are deemed to impact the model are tracked for inclusion in a PRA update. Proposed plant design changes, which screen-in as having possible PRA impact, are reviewed by the PRA group, and those that would impact the PRA model are tracked for inclusion in a PRA update.

   - In addition to Technical Specification and plant design changes, the following items are monitored and included, as appropriate, in PRA model updates:

     - Unavailability and functional failure data from the Callaway Maintenance Rule program,
     - Emergency Operating Procedure changes,
     - Operating experience (both industry and Callaway-specific)

       and

     - Westinghouse Owners' Group, NRC and other industry studies, methodology enhancements, etc.

   - All PRA model changes are documented in calculation notes and undergo review by a qualified AmerenUE reviewer and the PRA group supervisor.

2. Based on a review of the "Staff Evaluation Report (SER) for the Union Electric Company, Callaway Plant, Unit 1 Individual Plant Examination (IPE) Submittal," transmitted by NRC letter dated 5/21/96, one contractor observation was noted to have an impact on this risk-informed amendment request. On page 37 of Appendix A of the SER, NRC's contractor made the following observation:

   "Relatively low values for probability of non-recovery of AC power. This aspect of the modeling process lowers the CDF from station blackout by using a higher probability for recovery of AC power than reflected by average industry data."

   In response to this observation, for this application, AmerenUE revised the methodology used to calculate AC power recovery probabilities, with regard to recovery of offsite power only, in the station blackout event tree. This resulted in significantly higher failure-to-recover AC power probabilities. The revised failure-to-recover AC power probabilities, used in the PRA calculations to support this license amendment request (LAR), are provided in the table below.

Failure-to-Recover AC Power Within:	Without Switchyard Restrictions:	With Switchyard Restrictions:
2 hrs.	0.333	0.364
8 hrs.	0.100	0.136
10 hrs.	0.083	0.114
12 hrs.	0.033	0.046

   It is believed that these values are more in line with "average industry data," and are thus responsive to the NRC contractor's observation.

3. A Westinghouse Owners Group (WOG) PRA Peer Review was performed on the Callaway PRA in November of 2000. Peer Review findings that may have a direct impact on this LAR are noted below.

   There was a peer review finding related to the use of only generic data for the loss of offsite power (LOSP) initiating event frequency. However, the PRA calculations supporting this LAR utilize LOSP initiating event frequencies that incorporate both generic and Callaway-specific experience.

   There were also peer review findings related to AmerenUE's use of the WCAP 10541, Rev. 2 reactor coolant pump (RCP) seal LOCA model, with a recommendation that the seal LOCA model be updated for applications or that sensitivity evaluations be performed. WCAP-15622 contains an RCP seal LOCA model sensitivity evaluation to support this WOG program.

   There was a peer review finding citing an apparent discrepancy between a 1-hour AC power recovery time and a 2-hour diesel-generator mission time in the

quantification of certain station blackout event tree sequences. This discrepancy was reconciled in the PRA calculations performed to support this LAR. A 2-hour timeframe was used for both the AC power recovery time and the diesel-generator mission time in these sequences.

4. There have been no "other PRA reviews" conducted on the Callaway PRA, and, hence, there are no findings stemming therefrom.

RAI 6: Provide the values for emergency diesel generator (EDG) reliability and unavailability used in the PRA calculations including SBO (include alternate AC source if applicable). Discuss these values in relationship to the maintenance rule implementation goals and comparison to actual EDG performance and SBO commitments. Discuss incorporation into WCAP-15622 implementation guidelines.

WOG Response: Table 8-2 of WCAP-15622 provides the EDG reliability information in terms of fail-to-start and fail-to-run values. Section 8.2.1 of WCAP-15622 provides a discussion on how the maintenance unavailabilities (EDG maintenance outage times) are expected to be impacted with the CT extension.

The additional information requested regarding the Maintenance Rule implementation goals, and comparison of actual EDG performance and SBO commitments (including the alternate AC source if applicable) will be provided in each licensee's LAR. To address this issue, each licensee requesting the EDG CT extension proposed in this WCAP, those currently included in the WCAP and those referencing the WCAP in future requests, will provide the following:

- EDG fail-to-start and fail-to-run values
- EDG maintenance unavailability with 3-day CT and with 7-day CT
- Alternate AC source failure probability values (if applicable)
- Alternate AC source maintenance unavailability (if applicable)
- Short discussion with regard to these values relative to Maintenance Rule goals, actual EDG performance, and SBO commitments.

Plant-Specific Response:

Revised EDG fail-to-start and fail-to-run values, as used Callaway's plant-specific PRA analysis, are provided in Attachment 1 wherein all of the values from Table 8.2 of the WCAP that were revised are now provided.

A review of Callaway's Maintenance Rule database for the three-year period that includes the two most recent, complete operating cycles (i.e., operating cycles 11 and 12) was performed for the EDGs. Based on the review, both units/trains operated within the specified reliability and availability performance criteria for the EDGs. The system performance criteria for the EDGs are an unavailability of less than or equal to 150 hours

for each train per operating cycle and incurring less than or equal to two maintenance preventable functional failures (MPFFs) for each train per operating cycle.

- Actual system performance for cycle 11: 113.0 hours unavailability and zero MPFFs for train A (EDG NE01); 53.1 hours unavailability and zero MPFFs for train B (EDG NE02).
- Actual system performance for cycle 12: 89.1 hours unavailability and zero MPFFs for train A; 107.1 hours unavailability and one MPFF for train B.

Additional search of the Maintenance Rule database identified three EDG system functional failures during operating cycles 11 and 12.

The items in this RAI that refer to an Alternate AC source are not applicable to Callaway since no Alternate AC source was credited for Callaway.

RAI 11 (per Attachment 1 of WOG Letter OG-02-052 /
RAI 3 (per Attachment 2 of the WOG Letter)

RAI 11: The proposed completion times are requested in part to facilitate on-line maintenance or at-power preventive maintenance. Although the frequency and duration of the completion time may be estimated with the resulting unavailability calculated, discuss the effects that additional testing at power might have on plant risk due to improper maintenance or additional testing required that would have previously been performed during shutdown and not directly related to the extended completion time itself. Studies have shown that restoration failures have the potential to initiate a second loss of power that is difficult to diagnose and recover when that restoration was not always performed in accordance with established procedures.

RAI 3: The first bullet in Section 7.1 (of WCAP-15622) conveys that the likelihood of a transient occurring during the increased CT for an AC onsite electric power system has not been impacted and that some new activities may be performed on the EDG while at power. Explain how and why these new activities will not affect or impact the likelihood of maintenance or test induced transients.

WOG Response: The CT increase for the EDGs is the proposed change that will be primarily used by the utilities for performing preventive maintenance activities during power operation. The other CT extensions proposed will be primarily used to provide additional time to perform troubleshooting and component repair during power operation.

As stated in the Bases for Technical Specification 3.8 (Electrical Power Systems) of NUREG-1431, Rev. 2, the AC sources are designed to permit inspection and testing of all important areas and features, especially those that have a standby function, in accordance with 10 CFR 50, Appendix A, GDC 18. Periodic component tests are supplemented by extensive functional tests during refueling outages (under simulated accident conditions).

The surveillance requirements for demonstrating the OPERABILITY of the EDGs are in accordance with the recommendations of Regulatory Guide 1.9, Regulatory Guide 1.108, and Regulatory Guide 1.137, as addressed in the FSAR.

The issues in this RAI are related to the availability of the EDG following additional at-power preventive maintenance activities and also the potential for including electrical system transients during the preventive maintenance activities or during the post maintenance testing. As stated in the previous paragraph, surveillance requirements on the AC sources are designed in accordance with the noted Regulatory Guides to ensure OPERABILITY of the EDGs. These issues are addressed as follows:

- After maintenance activities, components/systems are subject to post maintenance testing and system alignment verification. Both are directed at demonstrating that the system is operable and will perform as required if demanded. These tests are performed regardless of the mode in which the testing is completed. Following the EDG at-power maintenance activity, a test will be completed to demonstrate operability of the EDG. This test is typically the monthly EDG test required in plant Technical Specifications. This monthly test is designed to be performed with the plant at-power and demonstrates EDG operability.
- EDG maintenance activities are completed with the EDG disconnected from the plant electrical distribution system. This configuration inhibits electrical transients from being introduced into the plant's electrical system.
- The testing is typically completed in a configuration that will not induce electrical system transients. The test used to demonstrate EDG operability is the same as that used to meet the Technical Specification monthly test requirement. This test is designed to be performed at-power and not introduce electrical system transients that could impact plant operation.

The licensees requesting this change will confirm that above in their LAR submittals. Information to be provided by each licensee includes:

- The test that will be used following at-power maintenance activities to demonstrate EDG operability.
- Confirmation that the EDG is disconnected from the plant's electrical system during at-power preventive maintenance activities.
- The precautions taken to ensure that plant electrical distribution system transients that could impact plant operation do not occur during the maintenance activity or follow-on testing.

Plant-Specific Response: Testing expected to be performed following at-power maintenance activities would be for either of two purposes, i.e., testing required at a minimum to demonstrate operability following planned or unplanned maintenance, and preplanned, routine testing required to satisfy Technical Specification (TS) Surveillance Requirements (SRs).

Following most maintenance activities, the only surveillance testing that is typically specified for verifying DG Operability is the start-and-load tests required per SRs 3.8.1.2, and 3.8.1.3. Sometimes, a short maintenance run of the EDG is performed first in accordance with plant maintenance procedures to verify the effectiveness of the maintenance that was performed. This testing would be no different than what has been performed to date under the current Technical Specifications.

With an increased Completion Time allowed for planned maintenance per TS 3.8.1, additional on-line maintenance will be considered for performance during plant operation. These at-power maintenance activities would be performed in much the same way and in accordance with the same procedures that are currently used for the performance of such activities during plant outages. These procedures require placing the EDG in the maintenance mode with the DG output breaker secured in the open position prior to performance of maintenance. In this mode the EDG is unable to be started or tied to the associated bus.

With regard to at-power testing, and as discussed in Subsection 3.1.3 of Attachment 1, AmerenUE has submitted a separate LAR (Reference 10 of Attachment 1) that is currently under review by the NRC staff and which if approved, would allow more of the DG surveillance tests required by the TS to be done during plant operation. Presently, the Technical Specifications contain Notes attached to certain SRs which forbid the associated SRs to be performed during Modes 1 and 2. These SRs include, for example, SR 3.8.1.14 (i.e., the endurance and margin test) wherein the diesel generator is required to be run continuously (at rated load) for 24 hours. Per the proposed changes to the Technical Specifications, the Mode restrictions for these SRs would be eliminated by removing the associated Notes, thus allowing these SRs to be done during any plant Mode.

With additional SRs allowed to be done during plant operation (upon approval of the requested TS changes), it is likely that at least some of the allowed testing will be scheduled for performance during plant operation.

Details concerning the performance of these tests, including the low potential for any significant plant transient or electrical disturbance and the resultant impact on EDG availability when performing these tests, is discussed in Reference 10 of Attachment 1.

Attachment 3
ULNRC-04866

MARKED-UP TECHNICAL SPECIFICATIONS

1.0 USE AND APPLICATION

1.3 Completion Times

PURPOSE

The purpose of this section is to establish the Completion Time convention and to provide guidance for its use.

BACKGROUND

Limiting Conditions for Operation (LCOs) specify minimum requirements for ensuring safe operation of the unit. The ACTIONS associated with an LCO state Conditions that typically describe the ways in which the requirements of the LCO can fail to be met. Specified with each stated Condition are Required Action(s) and Completion Time(s).

DESCRIPTION

No changes to this page. Provided only for context/continuity.

The Completion Time is the amount of time allowed for completing a Required Action. It is referenced to the time of discovery of a situation (e.g., inoperable equipment or variable not within limits) that requires entering an ACTIONS Condition unless otherwise specified, providing the unit is in a MODE or specified condition stated in the Applicability of the LCO. Required Actions must be completed prior to the expiration of the specified Completion Time. An ACTIONS Condition remains in effect and the Required Actions apply until the Condition no longer exists or the unit is not within the LCO Applicability.

If situations are discovered that require entry into more than one Condition at a time within a single LCO (multiple Conditions), the Required Actions for each Condition must be performed within the associated Completion Time. When in multiple Conditions, separate Completion Times are tracked for each Condition starting from the time of discovery of the situation that required entry into the Condition.

Once a Condition has been entered, subsequent trains, subsystems, components, or variables expressed in the Condition, discovered to be inoperable or not within limits, will not result in separate entry into the Condition, unless specifically stated. The Required Actions of the Condition continue to apply to each additional failure, with Completion Times based on initial entry into the Condition.

However, when a subsequent train, subsystem, component, or variable expressed in the Condition is discovered to be inoperable or not within limits, the Completion Time(s) may be extended. To apply this Completion Time extension, two criteria must first be met. The subsequent inoperability:

(continued)

1.3 Completion Times

DESCRIPTION (continued)

a. Must exist concurrent with the first inoperability; and

b. Must remain inoperable or not within limits after the first inoperability is resolved.

The total Completion Time allowed for completing a Required Action to address the subsequent inoperability shall be limited to the more restrictive of either:

a. The stated Completion Time, as measured from the initial entry into the Condition, plus an additional 24 hours; or

b. The stated Completion Time as measured from discovery of the subsequent inoperability.

The above Completion Time extensions do not apply to those Specifications that have exceptions that allow completely separate re-entry into the Condition (for each train, subsystem, component, or variable expressed in the Condition) and separate tracking of Completion Times based on this re-entry. These exceptions are stated in individual Specifications.

The above Completion Time extension does not apply to a Completion Time with a modified "time zero." This modified "time zero" may be expressed as a repetitive time (i.e., "once per 8 hours," where the Completion Time is referenced from a previous completion of the Required Action versus the time of Condition entry) or as a time modified by the phrase "from discovery . . ." ~~Example 1.3-3 illustrates one use of this type of Completion Time. The 10 day Completion Time specified for Conditions A and B in Example 1.3-3 may not be extended.~~

(continued)

1.3 Completion Times (continued)

EXAMPLES

The following examples illustrate the use of Completion Times with different types of Conditions and changing Conditions.

No changes to this page. Provided only for context/continuity.

EXAMPLE 1.3-1

ACTIONS

CONDITION	REQUIRED ACTION	COMPLETION TIME
B. Required Action and associated Completion Time not met.	B.1 Be in MODE 3. AND B.2 Be in MODE 5.	6 hours 36 hours

Condition B has two Required Actions. Each Required Action has its own separate Completion Time. Each Completion Time is referenced to the time that Condition B is entered.

The Required Actions of Condition B are to be in MODE 3 within 6 hours AND in MODE 5 within 36 hours. A total of 6 hours is allowed for reaching MODE 3 and a total of 36 hours (not 42 hours) is allowed for reaching MODE 5 from the time that Condition B was entered. If MODE 3 is reached within 3 hours, the time allowed for reaching MODE 5 is the next 33 hours because the total time allowed for reaching MODE 5 is 36 hours.

If Condition B is entered while in MODE 3, the time allowed for reaching MODE 5 is the next 36 hours.

(continued)

1.3 Completion Times

EXAMPLES
(continued)

No changes to this page. Provided only for context/continuity.

EXAMPLE 1.3-2

ACTIONS

CONDITION	REQUIRED ACTION	COMPLETION TIME
A. One pump inoperable.	A.1 Restore pump to OPERABLE status.	7 days
B. Required Action and associated Completion Time not met.	B.1 Be in MODE 3. AND B.2 Be in MODE 5.	6 hours 36 hours

When a pump is declared inoperable, Condition A is entered. If the pump is not restored to OPERABLE status within 7 days, Condition B is also entered and the Completion Time clocks for Required Actions B.1 and B.2 start. If the inoperable pump is restored to OPERABLE status after Condition B is entered, Condition A and B are exited, and therefore, the Required Actions of Condition B may be terminated.

When a second pump is declared inoperable while the first pump is still inoperable, Condition A is not re-entered for the second pump. LCO 3.0.3 is entered, since the ACTIONS do not include a Condition for more than one inoperable pump. The Completion Time clock for Condition A does not stop after LCO 3.0.3 is entered, but continues to be tracked from the time Condition A was initially entered.

While in LCO 3.0.3, if one of the inoperable pumps is restored to OPERABLE status and the Completion Time for Condition A has not expired, LCO 3.0.3 may be exited and operation continued in accordance with Condition A.

While in LCO 3.0.3, if one of the inoperable pumps is restored to OPERABLE status and the Completion Time for Condition A has expired, LCO 3.0.3 may be exited and operation continued in accordance with

(continued)

1.3 Completion Times

EXAMPLES

EXAMPLE 1.3-2 (continued)

Condition B. The Completion Time for Condition B is tracked from the time the Condition A Completion Time expired.

On restoring one of the pumps to OPERABLE status, the Condition A Completion Time is not reset, but continues from the time the first pump was declared inoperable. This Completion Time may be extended if the pump restored to OPERABLE status was the first inoperable pump. A 24 hour extension to the stated 7 days is allowed, provided this does not result in the second pump being inoperable for > 7 days.

No changes to this page.
Provided only for context/continuity.

(continued)

1.3 Completion Times

EXAMPLES (continued)

EXAMPLE 1.3-3

ACTIONS

CONDITION	REQUIRED ACTION	COMPLETION TIME
A. One Function X train inoperable.	A.1 Restore Function X train to OPERABLE status.	7 days AND 10 days from discovery of failure to meet the LCO
B. One Function Y train inoperable.	B.1 Restore Function Y train to OPERABLE status.	72 hours AND 10 days from discovery of failure to meet the LCO
C. One Function X train inoperable. AND One Function Y train inoperable.	C.1 Restore Function X train to OPERABLE status. OR C.2 Restore Function Y train to OPERABLE status.	72 hours 72 hours

(continued)

1.3 Completion Times

EXAMPLES

EXAMPLE 1.3-3 (continued)

When one Function X train and one Function Y train are inoperable, Condition A and Condition B are concurrently applicable. The Completion Times for Condition A and Condition B are tracked separately for each train starting from the time each train was declared inoperable and the Condition was entered. A separate Completion Time is established for Condition C and tracked from the time the second train was declared inoperable (i.e., the time the situation described in Condition C was discovered).

If Required Action C.2 is completed within the specified Completion Time, Conditions B and C are exited. If the Completion Time for Required Action A.1 has not expired, operation may continue in accordance with Condition A. The remaining Completion Time in Condition A is measured from the time the affected train was declared inoperable (i.e., initial entry into Condition A).

The Completion Times of Conditions A and B are modified by a logical connector with a separate 10 day Completion Time measured from the time it was discovered the LCO was not met. In this example, without the separate Completion Time, it would be possible to alternate between Conditions A, B, and C in such a manner that operation could continue indefinitely without ever restoring systems to meet the LCO. The separate Completion Time modified by the phrase "from discovery of failure to meet the LCO" is designed to prevent indefinite continued operation while not meeting the LCO. This Completion Time allows for an exception to the normal "time zero" for beginning the Completion Time "clock". In this instance, the Completion Time "time zero" is specified as commencing at the time the LCO was initially not met, instead of at the time the associated Condition was entered.

(continued)

1.3 Completion Times

EXAMPLES (continued)

EXAMPLE ~~1.3-4~~ 1.3-3

ACTIONS

CONDITION	REQUIRED ACTION	COMPLETION TIME
A. One or more valves inoperable.	A.1 Restore valve(s) to OPERABLE status.	4 hours
B. Required Action and associated Completion Time not met.	B.1 Be in MODE 3. AND B.2 Be in MODE 4.	6 hours 12 hours

A single Completion Time is used for any number of valves inoperable at the same time. The Completion Time associated with Condition A is based on the initial entry into Condition A and is not tracked on a per valve basis. Declaring subsequent valves inoperable, while Condition A is still in effect, does not trigger the tracking of separate Completion Times.

Once one of the valves has been restored to OPERABLE status, the Condition A Completion Time is not reset, but continues from the time the first valve was declared inoperable. The Completion Time may be extended if the valve restored to OPERABLE status was the first inoperable valve. The Condition A Completion Time may be extended for up to 4 hours provided this does not result in any subsequent valve being inoperable for > 4 hours.

If the Completion Time of 4 hours (including the extension) expires while one or more valves are still inoperable, Condition B is entered.

(continued)

1.3 Completion Times

EXAMPLES (continued)

EXAMPLE ~~1.3-5~~ 1.3-4

ACTIONS

NOTE
Separate Condition entry is allowed for each inoperable valve.

CONDITION	REQUIRED ACTION	COMPLETION TIME
A. One or more valves inoperable.	A.1 Restore valve to OPERABLE status.	4 hours
B. Required Action and associated Completion Time not met.	B.1 Be in MODE 3. AND B.2 Be in MODE 4.	6 hours 12 hours

The Note above the ACTIONS Table is a method of modifying how the Completion Time is tracked. If this method of modifying how the Completion Time is tracked was applicable only to a specific Condition, the Note would appear in that Condition rather than at the top of the ACTIONS Table.

The Note allows Condition A to be entered separately for each inoperable valve, and Completion Times tracked on a per valve basis. When a valve is declared inoperable, Condition A is entered and its Completion Time starts. If subsequent valves are declared inoperable, Condition A is entered for each valve and separate Completion Times start and are tracked for each valve.

(continued)

1.3 Completion Times

EXAMPLES

EXAMPLE ~~1.3-5~~ 1.3-4 (continued)

If the Completion Time associated with a valve in Condition A expires, Condition B is entered for that valve. If the Completion Times associated with subsequent valves in Condition A expire, Condition B is entered separately for each valve and separate Completion Times start and are tracked for each valve. If a valve that caused entry into Condition B is restored to OPERABLE status, Condition B is exited for that valve.

Since the Note in this example allows multiple Condition entry and tracking of separate Completion Times, Completion Time extensions do not apply.

EXAMPLE ~~1.3-6~~ 1.3-5

ACTIONS

CONDITION	REQUIRED ACTION	COMPLETION TIME
A. One channel inoperable.	A.1 Perform SR 3.x.x.x.	Once per 8 hours
	OR	
	A.2 Reduce THERMAL POWER to ≤ 50% RTP.	8 hours
B. Required Action and associated Completion Time not met.	B.1 Be in MODE 3.	6 hours

(continued)

1.3 Completion Times

EXAMPLES

EXAMPLE ~~1.3-6~~ 1.3-5 (continued)

Entry into Condition A offers a choice between Required Action A.1 or A.2. Required Action A.1 has a "once per" Completion Time, which qualifies for the 25% extension, per SR 3.0.2, to each performance after the initial performance. The initial 8 hour interval of Required Action A.1 begins when Condition A is entered and the initial performance of Required Action A.1 must be complete within the first 8 hour interval. If Required Action A.1 is followed, and the Required Action is not met within the Completion Time (plus the extension allowed by SR 3.0.2), Condition B is entered. If Required Action A.2 is followed and the Completion Time of 8 hours is not met, Condition B is entered.

If after entry into Condition B, Required Action A.1 or A.2 is met, Condition B is exited and operation may then continue in Condition A.

(continued)

1.3 Completion Times

EXAMPLES (continued)

EXAMPLE ~~1.3-7~~ 1.3-6

ACTIONS

CONDITION	REQUIRED ACTION	COMPLETION TIME
A. One subsystem inoperable.	A.1 Verify affected subsystem isolated.	1 hour AND Once per 8 hours thereafter
	AND A.2 Restore subsystem to OPERABLE status.	72 hours
B. Required Action and associated Completion Time not met.	B.1 Be in MODE 3.	6 hours
	AND B.2 Be in MODE 5.	36 hours

Required Action A.1 has two Completion Times. The 1 hour Completion Time begins at the time the Condition is entered and each "Once per 8 hours thereafter" interval begins upon performance of Required Action A.1.

If after Condition A is entered, Required Action A.1 is not met within either the initial 1 hour or any subsequent 8 hour interval from the previous performance (plus the extension allowed by SR 3.0.2), Condition B is entered. The Completion Time clock for Condition A does not stop after Condition B is entered, but continues from the time Condition A was initially entered. If Required Action A.1 is met after Condition B is entered, Condition B is exited and operation may continue in accordance with

(continued)

1.3 Completion Times

EXAMPLES	EXAMPLE ~~1.3-7~~ 1.3-6 (continued)
	Condition A, provided the Completion Time for Required Action A.2 has not expired.
IMMEDIATE COMPLETION TIME	When "Immediately" is used as a Completion Time, the Required Action should be pursued without delay and in a controlled manner.

3.6 CONTAINMENT SYSTEMS

3.6.6 Containment Spray and Cooling Systems

LCO 3.6.6 Two containment spray trains and two containment cooling trains shall be OPERABLE.

APPLICABILITY: MODES 1, 2, 3, and 4.

ACTIONS

CONDITION	REQUIRED ACTION		COMPLETION TIME
A. One containment spray train inoperable.	A.1	Restore containment spray train to OPERABLE status.	72 hours ~~AND~~ ~~10 days from discovery of failure to meet the LCO~~
B. Required Action and associated Completion Time of Condition A not met	B.1	Be in MODE 3.	6 hours
	AND		
	B.2	Be in MODE 5.	84 hours
C. One containment cooling train inoperable.	C.1	Restore containment cooling train to OPERABLE status.	7 days ~~AND~~ ~~10 days from discovery of failure to meet the LCO~~

(continued)

No changes to this page.
Provided only for context/continuity.

ACTIONS (continued)

CONDITION	REQUIRED ACTION	COMPLETION TIME
D. Two containment cooling trains inoperable.	D.1 Restore one containment cooling train to OPERABLE status.	72 hours
E. Required Action and associated Completion Time of Condition C or D not met.	E.1 Be in MODE 3. AND E.2 Be in MODE 5.	6 hours 36 hours
F. Two containment spray trains inoperable. OR Any combination of three or more trains inoperable.	F.1 Enter LCO 3.0.3.	Immediately

SURVEILLANCE REQUIREMENTS

SURVEILLANCE		FREQUENCY
SR 3.6.6.1	Verify each containment spray manual, power operated, and automatic valve in the flow path that is not locked, sealed, or otherwise secured in position is in the correct position.	31 days
SR 3.6.6.2	Operate each containment cooling train fan unit for ≥ 15 minutes.	31 days

(continued)

3.7 PLANT SYSTEMS

3.7.5 Auxiliary Feedwater (AFW) System

LCO 3.7.5 Three AFW trains shall be OPERABLE.

APPLICABILITY: MODES 1, 2, and 3.

ACTIONS

CONDITION	REQUIRED ACTION	COMPLETION TIME
A. One steam supply to turbine driven AFW pump inoperable.	A.1 Restore steam supply to OPERABLE status.	7 days ~~AND~~ ~~10 days from discovery of failure to meet the LCO~~
B. One ESW supply to turbine driven AFW pump inoperable	B.1 Restore ESW supply to OPERABLE status.	72 hours ~~AND~~ ~~10 days from discovery of failure to meet the LCO~~
C. One AFW train inoperable for reasons other than Condition A or B.	C.1 Restore AFW train to OPERABLE status.	72 hours ~~AND~~ ~~10 days from discovery of failure to meet the LCO~~

(continued)

ACTIONS (continued)

CONDITION	REQUIRED ACTION		COMPLETION TIME
D. Required Action and associated Completion Time for Condition A, B or C not met. OR Two AFW trains inoperable.	D.1 AND D.2	Be in MODE 3. Be in MODE 4.	6 hours 12 hours
E. Three AFW trains inoperable.	E.1	---------- NOTE ---------- LCO 3.0.3 and all other LCO Required Actions requiring MODE changes are suspended until one AFW train is restored to OPERABLE status. ---------- Initiate action to restore one AFW train to OPERABLE status.	 Immediately

No changes to this page...
Provided only for context/continuity.

No changes to this page.
Provided only for context/continuity.

3.8 ELECTRICAL POWER SYSTEMS

3.8.1 AC Sources - Operating

LCO 3.8.1 The following AC electrical sources shall be OPERABLE:

a. Two qualified circuits between the offsite transmission network and the onsite Class 1E AC Electrical Power Distribution System; and

b. Two diesel generators (DGs) capable of supplying the onsite Class 1E power distribution subsystem(s); and

c. Load Shedder and Emergency Load Sequencer (LSELS) for Train A and Train B.

APPLICABILITY: MODES 1, 2, 3, and 4.

ACTIONS

CONDITION	REQUIRED ACTION		COMPLETION TIME
A. One offsite circuit inoperable.	A.1	Perform SR 3.8.1.1 for OPERABLE offsite circuit.	1 hour AND Once per 8 hours thereafter
	AND		
	A.2	——— NOTE ——— In Modes 1, 2, and 3, the turbine driven auxiliary feedwater pump is considered a required redundant feature. ———	

(continued)

ACTIONS

CONDITION	REQUIRED ACTION		COMPLETION TIME
A. One offsite circuit inoperable. (continued)		Declare required feature(s) with no offsite power available inoperable when its redundant required feature(s) is inoperable.	24 hours from discovery of no offsite power to one train concurrent with inoperability of redundant required feature(s)
	AND		
	A.3	Restore offsite circuit to OPERABLE status.	72 hours ~~AND~~ ~~8 days from discovery of failure to meet LCO~~
B. One DG inoperable.	B.1	Perform SR 3.8.1.1 for the offsite circuit(s).	1 hour AND Once per 8 hours thereafter
	AND		
	B.2	——— NOTE ——— In MODES 1, 2, and 3, the turbine driven auxiliary feedwater pump is considered a required redundant feature. ———————	
			(continued)

ACTIONS

CONDITION	REQUIRED ACTION		COMPLETION TIME
B. One DG inoperable. (continued)		Declare required feature(s) supported by the inoperable DG inoperable when its required redundant feature(s) is inoperable.	4 hours from discovery of Condition B concurrent with inoperability of redundant required feature(s)
	AND		
	B.3.1	Determine OPERABLE DG is not inoperable due to common cause failure.	24 hours
	OR		
	B.3.2	---------- NOTE ---------- The required ACTION of B.3.2 is satisfied by the automatic start and sequence loading of the diesel generator. ----------	
		Perform SR 3.8.1.2 for OPERABLE DG.	24 hours
	AND		
	B.4	Restore DG to OPERABLE status.	72 hours ~~AND 6 days from discovery of failure to meet LCO~~

(continued)

OR

108 hours once per cycle for each DG

No changes to this page.
Provided only for context/continuity.

ACTIONS (continued)

CONDITION	REQUIRED ACTION		COMPLETION TIME
C. Two offsite circuits inoperable.	C.1	---------- NOTE ---------- In Modes 1, 2, and 3, the turbine driven auxiliary feedwater pump is considered a required redundant feature. ----------	
		Declare required feature(s) inoperable when its redundant required feature(s) is inoperable.	12 hours from discovery of Condition C concurrent with inoperability of redundant required features
	AND		
	C.2	Restore one offsite circuit to OPERABLE status.	24 hours
D. One offsite circuit inoperable. AND One DG inoperable.	---------- NOTE ---------- Enter applicable Conditions and Required Actions of LCO 3.8.9, "Distribution Systems - Operating," when Condition D is entered with no AC power source to any train. ----------		
	D.1	Restore offsite circuit to OPERABLE status.	12 hours
	OR		
	D.2	Restore DG to OPERABLE status.	12 hours

(continued)

ACTIONS (continued)

CONDITION	REQUIRED ACTION		COMPLETION TIME
E. Two DGs inoperable.	E.1	Restore one DG to OPERABLE status.	2 hours
F. One required LSELS inoperable.	F.1	Declare the affected DG and offsite circuit inoperable.	Immediately
	AND		
	F.2	Restore required LSELS to OPERABLE status.	12 hours
G. Required Action and associated Completion Time of Condition A, B, C, D, E, or F not met.	G.1	Be in MODE 3.	6 hours
	AND		
	G.2	Be in MODE 5.	36 hours
H. Three or more AC sources inoperable.	H.1	Enter LCO 3.0.3.	Immediately

No changes to this page.
Provided only for context/continuity.

3.8 ELECTRICAL POWER SYSTEMS

3.8.9 Distribution Systems - Operating

LCO 3.8.9 Train A and Train B AC, DC, and AC vital bus electrical power distribution subsystems shall be OPERABLE.

APPLICABILITY: MODES 1, 2, 3, and 4.

ACTIONS

CONDITION	REQUIRED ACTION	COMPLETION TIME
A. One AC electrical power distribution subsystem inoperable.	A.1 Restore AC electrical power distribution subsystem to OPERABLE status.	8 hours ~~AND~~ ~~16 hours from discovery of failure to meet LCO~~
B. One AC vital bus subsystem inoperable.	B.1 Restore AC vital bus subsystem to OPERABLE status.	2 hours ~~AND~~ ~~16 hours from discovery of failure to meet LCO~~

(continued)

ACTIONS (continued)

CONDITION	REQUIRED ACTION		COMPLETION TIME
C. One DC electrical power distribution subsystem inoperable.	C.1	Restore DC electrical power distribution subsystem to OPERABLE status.	2 hours ~~AND~~ ~~16 hours from discovery of failure to meet LCO~~
D. Required Action and associated Completion Time not met.	D.1 AND D.2	Be in MODE 3. Be in MODE 5.	6 hours 36 hours
E. Two trains with inoperable distribution subsystems that result in a loss of safety function.	E.1	Enter LCO 3.0.3.	Immediately

SURVEILLANCE REQUIREMENTS

SURVEILLANCE		FREQUENCY
SR 3.8.9.1	Verify correct breaker alignments and voltage to required AC, DC, and AC vital bus electrical power distribution subsystems.	7 days

Attachment 4
ULNRC-04866

PROPOSED/REVISED TECHNICAL SPECIFICATIONS

1.3 Completion Times

DESCRIPTION (continued)

a. Must exist concurrent with the first inoperability; and

b. Must remain inoperable or not within limits after the first inoperability is resolved.

The total Completion Time allowed for completing a Required Action to address the subsequent inoperability shall be limited to the more restrictive of either:

a. The stated Completion Time, as measured from the initial entry into the Condition, plus an additional 24 hours; or

b. The stated Completion Time as measured from discovery of the subsequent inoperability.

The above Completion Time extensions do not apply to those Specifications that have exceptions that allow completely separate re-entry into the Condition (for each train, subsystem, component, or variable expressed in the Condition) and separate tracking of Completion Times based on this re-entry. These exceptions are stated in individual Specifications.

The above Completion Time extension does not apply to a Completion Time with a modified "time zero." This modified "time zero" may be expressed as a repetitive time (i.e., "once per 8 hours," where the Completion Time is referenced from a previous completion of the Required Action versus the time of Condition entry) or as a time modified by the phrase "from discovery . . ."

(continued)

1.3 Completion Times

EXAMPLES (continued)

EXAMPLE 1.3-3

ACTIONS

CONDITION	REQUIRED ACTION	COMPLETION TIME
A. One or more valves inoperable.	A.1 Restore valve(s) to OPERABLE status.	4 hours
B. Required Action and associated Completion Time not met.	B.1 Be in MODE 3. AND B.2 Be in MODE 4.	6 hours 12 hours

A single Completion Time is used for any number of valves inoperable at the same time. The Completion Time associated with Condition A is based on the initial entry into Condition A and is not tracked on a per valve basis. Declaring subsequent valves inoperable, while Condition A is still in effect, does not trigger the tracking of separate Completion Times.

Once one of the valves has been restored to OPERABLE status, the Condition A Completion Time is not reset, but continues from the time the first valve was declared inoperable. The Completion Time may be extended if the valve restored to OPERABLE status was the first inoperable valve. The Condition A Completion Time may be extended for up to 4 hours provided this does not result in any subsequent valve being inoperable for > 4 hours.

If the Completion Time of 4 hours (including the extension) expires while one or more valves are still inoperable, Condition B is entered.

(continued)

1.3 Completion Times

EXAMPLES (continued)

EXAMPLE 1.3-4

ACTIONS

NOTE
Separate Condition entry is allowed for each inoperable valve.

CONDITION	REQUIRED ACTION	COMPLETION TIME
A. One or more valves inoperable.	A.1 Restore valve to OPERABLE status.	4 hours
B. Required Action and associated Completion Time not met.	B.1 Be in MODE 3. AND B.2 Be in MODE 4.	6 hours 12 hours

The Note above the ACTIONS Table is a method of modifying how the Completion Time is tracked. If this method of modifying how the Completion Time is tracked was applicable only to a specific Condition, the Note would appear in that Condition rather than at the top of the ACTIONS Table.

The Note allows Condition A to be entered separately for each inoperable valve, and Completion Times tracked on a per valve basis. When a valve is declared inoperable, Condition A is entered and its Completion Time starts. If subsequent valves are declared inoperable, Condition A is entered for each valve and separate Completion Times start and are tracked for each valve.

(continued)

1.3 Completion Times

EXAMPLES

EXAMPLE 1.3-4 (continued)

If the Completion Time associated with a valve in Condition A expires, Condition B is entered for that valve. If the Completion Times associated with subsequent valves in Condition A expire, Condition B is entered separately for each valve and separate Completion Times start and are tracked for each valve. If a valve that caused entry into Condition B is restored to OPERABLE status, Condition B is exited for that valve.

Since the Note in this example allows multiple Condition entry and tracking of separate Completion Times, Completion Time extensions do not apply.

EXAMPLE 1.3-5

ACTIONS

CONDITION	REQUIRED ACTION	COMPLETION TIME
A. One channel inoperable.	A.1 Perform SR 3.x.x.x.	Once per 8 hours
	OR	
	A.2 Reduce THERMAL POWER to ≤ 50% RTP.	8 hours
B. Required Action and associated Completion Time not met.	B.1 Be in MODE 3.	6 hours

(continued)

1.3 Completion Times

EXAMPLES

EXAMPLE 1.3-5 (continued)

Entry into Condition A offers a choice between Required Action A.1 or A.2. Required Action A.1 has a "once per" Completion Time, which qualifies for the 25% extension, per SR 3.0.2, to each performance after the initial performance. The initial 8 hour interval of Required Action A.1 begins when Condition A is entered and the initial performance of Required Action A.1 must be complete within the first 8 hour interval. If Required Action A.1 is followed, and the Required Action is not met within the Completion Time (plus the extension allowed by SR 3.0.2), Condition B is entered. If Required Action A.2 is followed and the Completion Time of 8 hours is not met, Condition B is entered.

If after entry into Condition B, Required Action A.1 or A.2 is met, Condition B is exited and operation may then continue in Condition A.

(continued)

1.3 Completion Times

EXAMPLES (continued)

EXAMPLE 1.3-6

ACTIONS

CONDITION	REQUIRED ACTION	COMPLETION TIME
A. One subsystem inoperable.	A.1 Verify affected subsystem isolated.	1 hour AND Once per 8 hours thereafter
	AND	
	A.2 Restore subsystem to OPERABLE status.	72 hours
B. Required Action and associated Completion Time not met.	B.1 Be in MODE 3.	6 hours
	AND	
	B.2 Be in MODE 5.	36 hours

Required Action A.1 has two Completion Times. The 1 hour Completion Time begins at the time the Condition is entered and each "Once per 8 hours thereafter" interval begins upon performance of Required Action A.1.

If after Condition A is entered, Required Action A.1 is not met within either the initial 1 hour or any subsequent 8 hour interval from the previous performance (plus the extension allowed by SR 3.0.2), Condition B is entered. The Completion Time clock for Condition A does not stop after Condition B is entered, but continues from the time Condition A was initially entered. If Required Action A.1 is met after Condition B is entered, Condition B is exited and operation may continue in accordance with.

(continued)

1.3 Completion Times (continued)

EXAMPLES	EXAMPLE 1.3-6 (continued)
	Condition A, provided the Completion Time for Required Action A.2 has not expired
IMMEDIATE COMPLETION TIME	When "Immediately" is used as a Completion Time, the Required Action should be pursued without delay and in a controlled manner.

3.6 CONTAINMENT SYSTEMS

3.6.6 Containment Spray and Cooling Systems

LCO 3.6.6 Two containment spray trains and two containment cooling trains shall be OPERABLE.

APPLICABILITY: MODES 1, 2, 3, and 4.

ACTIONS

CONDITION	REQUIRED ACTION		COMPLETION TIME
A. One containment spray train inoperable.	A.1	Restore containment spray train to OPERABLE status.	72 hours
B. Required Action and associated Completion Time of Condition A not met	B.1	Be in MODE 3.	6 hours
	AND		
	B.2	Be in MODE 5.	84 hours
C. One containment cooling train inoperable.	C.1	Restore containment cooling train to OPERABLE status.	7 days

(continued)

3.7 PLANT SYSTEMS

3.7.5 Auxiliary Feedwater (AFW) System

LCO 3.7.5 Three AFW trains shall be OPERABLE.

APPLICABILITY: MODES 1, 2, and 3.

ACTIONS

CONDITION	REQUIRED ACTION		COMPLETION TIME
A. One steam supply to turbine driven AFW pump inoperable.	A.1	Restore steam supply to OPERABLE status.	7 days
B. One ESW supply to turbine driven AFW pump inoperable	B.1	Restore ESW supply to OPERABLE status.	72 hours
C. One AFW train inoperable for reasons other than Condition A or B.	C.1	Restore AFW train to OPERABLE status.	72 hours

(continued)

ACTIONS

CONDITION	REQUIRED ACTION		COMPLETION TIME
A. One offsite circuit inoperable. (continued)		Declare required feature(s) with no offsite power available inoperable when its redundant required feature(s) is inoperable.	24 hours from discovery of no offsite power to one train concurrent with inoperability of redundant required feature(s)
	AND		
	A.3	Restore offsite circuit to OPERABLE status.	72 hours
B. One DG inoperable.	B.1	Perform SR 3.8.1.1 for the offsite circuit(s).	1 hour AND Once per 8 hours thereafter
	AND		
	B.2	---------- NOTE ---------- In MODES 1, 2, and 3, the turbine driven auxiliary feedwater pump is considered a required redundant feature. ----------	
			(continued)

ACTIONS

CONDITION	REQUIRED ACTION		COMPLETION TIME
B. One DG inoperable. (continued)		Declare required feature(s) supported by the inoperable DG inoperable when its required redundant feature(s) is inoperable.	4 hours from discovery of Condition B concurrent with inoperability of redundant required feature(s)
	AND		
	B.3.1	Determine OPERABLE DG is not inoperable due to common cause failure.	24 hours
	OR		
	B.3.2	---------- NOTE ---------- The required ACTION of B.3.2 is satisfied by the automatic start and sequence loading of the diesel generator. ----------	
		Perform SR 3.8.1.2 for OPERABLE DG.	24 hours
	AND		
	B.4	Restore DG to OPERABLE status.	72 hours OR 108 hours once per cycle for each DG

(continued)

3.8 ELECTRICAL POWER SYSTEMS

3.8.9 Distribution Systems - Operating

LCO 3.8.9 Train A and Train B AC, DC, and AC vital bus electrical power distribution subsystems shall be OPERABLE.

APPLICABILITY: MODES 1, 2, 3, and 4.

ACTIONS

CONDITION	REQUIRED ACTION		COMPLETION TIME
A. One AC electrical power distribution subsystem inoperable.	A.1	Restore AC electrical power distribution subsystem to OPERABLE status.	8 hours
B. One AC vital bus subsystem inoperable.	B.1	Restore AC vital bus subsystem to OPERABLE status.	2 hours

(continued)

ACTIONS (continued)

CONDITION	REQUIRED ACTION		COMPLETION TIME
C. One DC electrical power distribution subsystem inoperable.	C.1	Restore DC electrical power distribution subsystem to OPERABLE status.	2 hours
D. Required Action and associated Completion Time not met.	D.1	Be in MODE 3.	6 hours
	AND		
	D.2	Be in MODE 5.	36 hours
E. Two trains with inoperable distribution subsystems that result in a loss of safety function.	E.1	Enter LCO 3.0.3.	Immediately

SURVEILLANCE REQUIREMENTS

SURVEILLANCE		FREQUENCY
SR 3.8.9.1	Verify correct breaker alignments and voltage to required AC, DC, and AC vital bus electrical power distribution subsystems.	7 days

Attachment 5
ULNRC-04866

TS BASES CHANGES
(For Information Only)

BASES

LCO (continued)

cooling trains must be OPERABLE. Therefore, in the event of an accident, at least one train in each system operates, assuming the worst case single active failure occurs.

A Containment Spray train typically includes a spray pump, spray headers, nozzles, valves, piping, instruments, and controls to ensure an OPERABLE flow path capable of taking suction from the RWST upon an ESF actuation signal and manually transferring to the containment sump.

A Containment Cooling train typically includes cooling coils, dampers, two fans, instruments, and controls to ensure an OPERABLE flow path.

APPLICABILITY

In MODES 1, 2, 3, and 4, a DBA could cause a release of radioactive material to containment and an increase in containment pressure and temperature requiring the operation of the containment spray trains and containment cooling trains.

In MODES 5 and 6, the probability and consequences of these events are reduced due to the pressure and temperature limitations of these MODES. Thus, the Containment Spray System and the Containment Cooling System are not required to be OPERABLE in MODES 5 and 6.

ACTIONS

A.1

With one containment spray train inoperable, the inoperable containment spray train must be restored to OPERABLE status within 72 hours. In this Condition, the remaining OPERABLE spray and cooling trains are adequate to perform the iodine removal and containment cooling functions. The 72 hour Completion Time takes into account the redundant heat removal capability afforded by the Containment Spray System, reasonable time for repairs, and low probability of a DBA occurring during this period.

~~The 10 day portion of the Completion Time for Required Action A.1 is based upon engineering judgment. It takes into account the low probability of coincident entry into two Conditions in this Specification coupled with the low probability of an accident occurring during this time. Refer to Section 1.3, "Completion Times," for a more detailed discussion of the purpose of the "from discovery of failure to meet the LCO" portion of the Completion Time.~~

(continued)

BASES

ACTIONS (continued)

B.1 and B.2

If the inoperable containment spray train cannot be restored to OPERABLE status within the required Completion Time, the plant must be brought to a MODE in which the LCO does not apply. To achieve this status, the plant must be brought to at least MODE 3 within 6 hours and to MODE 5 within 84 hours. The allowed Completion Time of 6 hours is reasonable, based on operating experience, to reach MODE 3 from full power conditions in an orderly manner and without challenging plant systems. The extended interval to reach MODE 5 allows additional time for attempting restoration of the containment spray train and is reasonable when considering the driving force for a release of radioactive material from the Reactor Coolant System is reduced in MODE 3.

C.1

With one of the containment cooling trains inoperable, the inoperable containment cooling train must be restored to OPERABLE status within 7 days. The remaining OPERABLE containment spray and cooling components provide iodine removal capabilities and are capable of providing at least 100% of the heat removal needs. The 7 day Completion Time was developed taking into account the redundant heat removal capabilities afforded by combinations of the Containment Spray System and Containment Cooling System and the low probability of DBA occurring during this period.

~~The 10 day portion of the Completion Time for Required Action C.1 is based upon engineering judgment. It takes into account the low probability of coincident entry into two Conditions in this Specification coupled with the low probability of an accident occurring during this time. Refer to Section 1.3 for a more detailed discussion of the purpose of the "from discovery of failure to meet the LCO" portion of the Completion Time.~~

D.1

With two containment cooling trains inoperable, one of the containment cooling trains must be restored to OPERABLE status within 72 hours. The remaining OPERABLE containment spray components provide iodine removal capabilities and are capable of providing at least 100% of the heat removal needs after an accident. The 72 hour Completion Time was developed taking into account the redundant heat removal capabilities afforded by combinations of the Containment Spray System and

(continued)

BASES (continued)

ACTIONS

A.1

If one of the two steam supplies to the turbine driven AFW train is inoperable, action must be taken to restore OPERABLE status within 7 days. The 7 day Completion Time is reasonable, based on the following reasons:

a. The redundant OPERABLE steam supply to the turbine driven AFW pump;

b. The availability of redundant OPERABLE motor driven AFW pumps; and

c. The low probability of an event occurring that requires the inoperable steam supply to the turbine driven AFW pump.

~~The second Completion Time for Required Action A.1 establishes a limit on the maximum time allowed for any combination of Conditions to be inoperable during any continuous failure to meet this LCO.~~

~~The 10 day Completion Time provides a limitation time allowed in this specified Condition after discovery of failure to meet the LCO. This limit is considered reasonable for situations in which multiple Conditions are entered concurrently. The AND connector between 7 days and 10 days dictates that both Completion Times apply simultaneously, and the more restrictive must be met.~~

B.1

With one of the two Essential Service Water supply lines in the turbine driven AFW train inoperable, action must be taken to restore the inoperable ESW supply line to OPERABLE status within 72 hours. One inoperable ESW supply line in the turbine driven AFW train does not render TDAFP inoperable since the turbine driven AFW train is provided with redundant ESW supply lines. The 72 hour Completion Time is reasonable, based on the following reasons:

a. The redundant OPERABLE Essential Service Water supply line in the turbine driven AFW train;

b. The availability of the preferred nonsafety grade Condensate Storage Tank supply;

(continued)

BASES

ACTIONS

B.1 (continued)

c. The availability of at least one OPERABLE motor driven AFW pump. When an ESW train inoperability renders a TDAFP supply line inoperable and a motor driven AFW pump supply line inoperable, then one motor driven AFW pump is OPERABLE and the second motor driven AFW pump is available with water supplied from the nonsafety grade Condensate Storage Tank;

d. The low probability of an event occurring that will require the inoperable Essential Service Water supply line to the turbine driven AFW pump; and

e. The 72 hour Completion Time is consistent with the allowed Completion Time for one train of ESW inoperable.

The second Completion Time for Required Action B.1 establishes a limit on the maximum time allowed for any combination of Conditions to be inoperable during any continuous failure to meet this LCO.

The 10 day Completion Time provides a limitation time allowed in this specified Condition after discovery of failure to meet the LCO. This limit is considered reasonable for situations in which multiple Conditions are entered concurrently. The AND connector between 72 hours and 10 days dictates that both Completion Times apply simultaneously, and the more restrictive must be met.

C.1

With one of the required AFW trains (pump or flow path) inoperable for reasons other than Condition A or Condition B, action must be taken to restore OPERABLE status within 72 hours. This Condition includes the loss of two steam supply lines or two ESW supply lines to the turbine driven AFW pump. The 72 hour Completion Time is reasonable, based on redundant capabilities afforded by the AFW System, time needed for repairs, and the low probability of a DBA occurring during this time period.

The second Completion Time for Required Action C.1 establishes a limit on the maximum time allowed for any combination of Conditions to be inoperable during any continuous failure to meet this LCO.

The 10 day Completion Time provides a limitation time allowed in this specified Condition after discovery of failure to meet the LCO. This limit is considered reasonable for situations in which multiple Conditions are entered concurrently. The AND connector between 72 hours and 10 days

(continued)

BASES

ACTIONS

C.1 (continued)

~~dictates that both Completion Times apply simultaneously, and the more restrictive must be met.~~

D.1 and D.2

When Required Action A.1 or B.1 or C.1 cannot be completed within the required Completion Time, or if two AFW trains are inoperable, the unit must be placed in a MODE in which the LCO does not apply. To achieve this status, the unit must be placed in at least MODE 3 within 6 hours, and in MODE 4 within 12 hours.

The allowed Completion Times are reasonable, based on operating experience, to reach the required unit conditions from full power conditions in an orderly manner and without challenging unit systems.

E.1

If all three AFW trains are inoperable, the unit is in a seriously degraded condition with no safety related means for conducting a cooldown, and only limited means for conducting a cooldown with nonsafety related equipment. In such a condition, the unit should not be perturbed by any action, including a power change, that might result in a trip. The seriousness of this condition requires that action be started immediately to restore one AFW train to OPERABLE status.

Required Action E.1 is modified by a Note indicating that all required MODE changes or power reductions are suspended until one AFW train is restored to OPERABLE status. In this case, LCO 3.0.3 is not applicable because it could force the unit into a less safe condition.

SURVEILLANCE REQUIREMENTS

SR 3.7.5.1

Verifying the correct alignment for manual, power operated, and automatic valves in the AFW System water and steam supply flow paths provides assurance that the proper flow paths will exist for AFW operation. This SR does not apply to valves that are locked, sealed, or otherwise secured in position, since these were verified to be in the correct position prior to locking, sealing, or securing. A valve that receives an actuation signal is allowed to be in a nonaccident position provided the valve will automatically reposition within the proper stroke time. This SR does not require any testing or valve manipulation. Rather, it involves verification, through a system walkdown (which may include the use of local or remote indicators), that those valves capable of being

(continued)

BASES

ACTIONS

A.2 (continued)

remaining OPERABLE offsite circuit. In this case, Required Actions A.1 and A.3 continue to apply.

The remaining OPERABLE offsite circuit and DGs are adequate to supply electrical power to Train A and Train B of the onsite Class 1E Distribution System. The 24 hour Completion Time takes into account the component OPERABILITY of the redundant counterpart to the inoperable required feature. Additionally, the 24 hour Completion Time takes into account the capacity and capability of the remaining AC sources, a reasonable time for repairs, and the low probability of a DBA occurring during this period.

A.3

According to Regulatory Guide 1.93 (Ref. 6), operation may continue in Condition A for a period that should not exceed 72 hours. With one offsite circuit inoperable, the reliability of the offsite system is degraded, and the potential for a loss of offsite power is increased, with attendant potential for a challenge to the unit safety systems. In this Condition, however, the remaining OPERABLE offsite circuit and DGs are adequate to supply electrical power to the onsite Class 1E Distribution System.

The 72 hour Completion Time takes into account the capacity and capability of the remaining AC sources, a reasonable time for repairs, and the low probability of a DBA occurring during this period.

The second Completion Time for Required Action A.3 establishes a limit on the maximum time allowed for any combination of required AC power sources to be inoperable during any single contiguous occurrence of failing to meet the LCO. If Condition A is entered while, for instance, a DG is inoperable and that DG is subsequently returned OPERABLE, the LCO may already have been not met for up to 72 hours. This could lead to a total of 144 hours, since initial failure to meet the LCO, to restore the offsite circuit. At this time, a DG could again become inoperable, the circuit restored OPERABLE, and an additional 72 hours (for a total of 9 days) allowed prior to complete restoration of the LCO. The 6 day Completion Time provides a limit on the time allowed in a specified condition after discovery of failure to meet the LCO. This limit is considered reasonable for situations in which Conditions A and B are entered concurrently. The "AND" connector between the 72 hour and 6 day Completion Times means that both Completion Times apply simultaneously, and the more restrictive Completion Time must be met.

(continued)

BASES

ACTIONS

A.3 (continued)

~~As in Required Action A.2, the Completion Time allows for an exception to the normal "time zero" for beginning the allowed outage time "clock." This will result in establishing the "time zero" at the time that the LCO was initially not met, instead of at the time Condition A was entered.~~

B.1

To ensure a highly reliable power source remains with an inoperable DG, it is necessary to verify the availability of the offsite circuits on a more frequent basis. Since the Required Action only specifies "perform," a failure of SR 3.8.1.1 acceptance criteria does not result in a Required Action being not met. However, if a circuit fails to pass SR 3.8.1.1, it is inoperable. Upon offsite circuit inoperability, additional Conditions and Required Actions must then be entered.

B.2

Required Action B.2 is intended to provide assurance that a loss of offsite power, during the period that a DG is inoperable, does not result in a complete loss of safety function of critical systems. These features are designed with redundant safety related trains. This includes motor driven auxiliary feedwater pumps and the turbine-driven auxiliary feedwater pump which must be available for mitigation of a feedwater line break. Redundant required feature failures consist of inoperable features associated with a train, redundant to the train that has an inoperable DG.

A Note is added to this Required Action stating that in MODES 1, 2, and 3, the turbine driven auxiliary feedwater pump is considered a required redundant feature. The reason for the Note is to confirm the OPERABILITY of the turbine driven auxiliary feedwater pump in this Condition, since the auxiliary feedwater pump is not by itself capable of providing 100% of the auxiliary feedwater flow assumed in the safety analysis.

The Completion Time for Required Action B.2 is intended to allow the operator time to evaluate and repair any discovered inoperabilities. This Completion Time also allows for an exception to the normal "time zero" for beginning the allowed outage time "clock." In this Required Action, the Completion Time only begins on discovery that both:

a. An inoperable DG exists; and

(continued)

BASES

ACTIONS

B.3.1 and B.3.2 (continued)

stating that it is satisfied by the automatic start and sequence loading of the DG.

In the event the inoperable DG is restored to OPERABLE status prior to completing either B.3.1 or B.3.2, the plant corrective action program will continue to evaluate the common cause possibility. This continued evaluation, however, is no longer under the 24 hour constraint imposed while in Condition B.

According to Generic Letter 84-15 (Ref. 7), 24 hours is reasonable to confirm that the OPERABLE DG(s) is not affected by the same problem as the inoperable DG.

Replace with attached "Insert A"

B.4

~~According to Regulatory Guide 1.93 (Ref. 6), operation may continue in Condition B for a period that should not exceed 72 hours.~~

~~In Condition B, the remaining OPERABLE DG and offsite circuits are adequate to supply electrical power to the onsite Class 1E Distribution System. The 72 hour Completion Time takes into account the capacity and capability of the remaining AC sources, a reasonable time for repairs, and the low probability of a DBA occurring during this period.~~

~~The second Completion Time for Required Action B.4 establishes a limit on the maximum time allowed for any combination of required AC power sources to be inoperable during any single contiguous occurrence of failing to meet the LCO. If Condition B is entered while, for instance, an offsite circuit is inoperable and that circuit is subsequently restored OPERABLE, the LCO may already have been not met for up to 72 hours. This could lead to a total of 144 hours, since initial failure to meet the LCO, to restore the DG. At this time, an offsite circuit could again become inoperable, the DG restored OPERABLE, and an additional 72 hours (for a total of 9 days) allowed prior to complete restoration of the LCO. The 6 day Completion Time provides a limit on time allowed in a specified condition after discovery of failure to meet the LCO. This limit is considered reasonable for situations in which Conditions A and B are entered concurrently. The "AND" connector between the 72 hour and 6 day Completion Times means that both Completion Times apply simultaneously, and the more restrictive Completion Time must be met.~~

~~As in Required Action B.2, the Completion Time allows for an exception to the normal "time zero" for beginning the allowed time "clock." This will~~

(continued)

Insert A

In Condition B, the remaining OPERABLE DG and offsite circuits are adequate to supply electrical power to the onsite Class 1E Distribution System. With a DG inoperable, the inoperable DG must be restored to OPERABLE status within the applicable, specified Completion Time. Two Completion Times are specified for Required Action B.4.

The first Completion Time applies when a DG is discovered or determined to be inoperable, such as due to a component failure, and requires time to effect repairs, or it may apply when a DG is rendered inoperable for the performance of maintenance during applicable Modes. The 72-hour Completion Time takes into account the capacity and capability of the remaining AC sources, reasonable time for repairs, and the low probability of a DBA during this period.

The second Completion Time of 108 hours once per cycle for each DG applies only when a DG is declared or rendered inoperable for the performance of voluntary, planned maintenance activities. The 108-hour Completion Time is a risk-informed allowed outage time (AOT) based on a plant-specific analysis using the methodology in WCAP-15622 (Reference 16). This extended DG AOT was established on the assumption that it would be used only for voluntary planned maintenance, inspections and testing. Use of the extended AOT is limited to once within an operating cycle (18 months) for each DG. Administrative controls applied during any extended DG AOT for voluntary planned maintenance activities ensure or require that:

a. The offsite power supply and switchyard conditions are conducive to an extended DG AOT, which includes ensuring that switchyard access is restricted and no elective maintenance within the switchyard is being performed that would challenge offsite power availability.

b. No equipment or systems assumed to be available in the probabilistic risk analysis for supporting the extended DG AOT are removed from service. The equipment or systems assumed to be available (including required support systems, i.e., associated room coolers, etc.) are as follows:

- Steam generator atmospheric relief valves
- Main steam isolation valves
- Auxiliary Feedwater system (all three trains)
- Chemical Volume and Control system [i.e., both centrifugal charging pump (CCP) trains]
- Essential Service Water system (both trains)
- Component Cooling Water system (both trains and all four pumps)
- Residual Heat Removal system (both trains)
- High Pressure Coolant Injection (i.e., both safety injection pump trains)

If, while the 108-hour Completion Time is in effect, one (or more) of the above systems or components is determined or discovered to be inoperable, or if an emergent condition affecting DG operability is identified, re-entry into Required Actions B.2 and B.3 would be required, as applicable. In addition, the effect on plant risk would be assessed and any additional or compensatory actions taken, in accordance with the plant's program for implementation of 10 CFR 50.65(a)(4). The 108-hour Completion Time would remain in effect for the DG if Required Actions B.2 and B.3 are satisfied.

BASES

ACTIONS

B.4 (continued)

~~result in establishing the "time zero" at the time that the LCO was initially not met, instead of at the time Condition B was entered.~~

C.1 and C.2

Required Action C.1, which applies when two offsite circuits are inoperable, is intended to provide assurance that an event with a coincident single failure will not result in a complete loss of redundant required safety functions. The Completion Time for this failure of redundant required features is reduced to 12 hours from that allowed for one train without offsite power (Required Action A.2). The rationale for the reduction to 12 hours is that Regulatory Guide 1.93 (Ref. 6) allows a Completion Time of 24 hours for two required offsite circuits inoperable, based upon the assumption that two complete safety trains are OPERABLE. When a concurrent redundant required feature failure exists, this assumption is not the case, and a shorter Completion Time of 12 hours is appropriate. These features are powered from redundant AC safety trains. This includes motor driven auxiliary feedwater pumps and the turbine driven auxiliary feedwater pump which must be available for mitigation of a feedwater line break. Single train features, other than the turbine driven auxiliary feedwater pump, are not included in this Condition.

A Note is added to this Required Action stating that in MODES 1, 2, and 3, the turbine driven auxiliary feedwater pump is considered a required redundant feature. The reason for the Note is to confirm the OPERABILITY of the turbine driven auxiliary feedwater pump in this Condition, since the auxiliary feedwater pump is not by itself capable of providing 100% of the auxiliary feedwater flow assumed in the safety analysis.

The Completion Time for Required Action C.1 is intended to allow the operator time to evaluate and repair any discovered inoperabilities. This Completion Time also allows for an exception to the normal "time zero" for beginning the allowed outage time "clock." In this Required Action the Completion Time only begins on discovery that both:

a. All required offsite circuits are inoperable; and

b. A required feature is inoperable.

If at any time during the existence of Condition C (two offsite circuits inoperable) a required feature becomes inoperable, this Completion Time begins to be tracked.

(continued)

BASES

SURVEILLANCE REQUIREMENTS (continued)

No changes to this page. Provided only for context/continuity.

SR 3.8.1.20

This Surveillance demonstrates that the DG starting independence has not been compromised. Also, this Surveillance demonstrates that each engine can achieve proper speed within the specified time when the DGs are started simultaneously.

The 10 year Frequency is consistent with the recommendations of Regulatory Guide 1.108 (Ref. 9).

This SR is modified by a Note. The reason for the Note is to minimize wear on the DG during testing. For the purpose of this testing, the DGs must be started from standby conditions, that is, with the engine coolant and oil continuously circulated and temperature maintained consistent with manufacturer recommendations.

SR 3.8.1.21

SR 3.8.1.21 is the performance of an ACTUATION LOGIC TEST for each Load Shedder and Emergency Load Sequencer train, except that the continuity check does not have to be performed, as explained in the Note. This test is performed every 31 days on a STAGGERED TEST BASIS. The Frequency is adequate based on industry operating experience, considering instrument reliability and operating history data.

REFERENCES

1. 10 CFR 50, Appendix A, GDC 17.
2. FSAR, Chapter 8.
3. Regulatory Guide 1.9, Rev. 3, July 1993.
4. FSAR, Chapter 6.
5. FSAR, Chapter 15.
6. Regulatory Guide 1.93, Rev. 0, December 1974.
7. Generic Letter 84-15, "Proposed Staff Actions to Improve and Maintain Diesel Generator Reliability," July 2, 1984.
8. 10 CFR 50, Appendix A, GDC 18.
9. Regulatory Guide 1.108, Rev. 1, August 1977.

(continued)

BASES

REFERENCES

10. Regulatory Guide 1.137, Rev. 0, January. 1978.

11. ASME, Boiler and Pressure Vessel Code, Section XI.

12. IEEE Standard 308-1978.

13. ULNRC-3244, dated July 25, 1995.

14. ULNRC-3342, dated February 28, 1996.

15. OL Amendment No. 112, dated August 4, 1996.

16. WCAP-15622, "Risk-Informed Evaluation of Extensions to AC Electrical Power System Completion Times."

No changes to this page.
Provided only for context/continuity.

BASES

LCO (continued)

however, preclude redundant Class 1E 4.16 kV buses from being powered from the same offsite circuit.

Closure of the tie breaker 52NG0116 between NG01 and NG03 or tie breaker 52NG0216 between NG02 and NG04 will render all four degraded voltage channels for the associated 4.16 kV bus inoperable. Refer to LCO 3.3.5, "LOP DG Start Instrumentation." The 480 V load center transformer load and voltage drop increase when one transformer is supplying both 480 V buses. Since the degraded voltage is sensed on the 4.16 kV bus, the actual 480 V bus voltage will be lower (lower than assumed during a degraded voltage condition) when the protection setpoint is reached. In this case, adequate protection is not provided for the 480 V bus loads.

APPLICABILITY

The electrical power distribution subsystems are required to be OPERABLE in MODES 1, 2, 3, and 4 to ensure that:

a. Acceptable fuel design limits and reactor coolant pressure boundary limits are not exceeded as a result of AOOs or abnormal transients; and

b. Adequate core cooling is provided, and containment OPERABILITY and other vital functions are maintained in the event of a postulated DBA.

Electrical power distribution subsystem requirements for MODES 5 and 6 are covered in the Bases for LCO 3.8.10, "Distribution Systems - Shutdown."

ACTIONS

A.1

With one or more required AC buses or load centers, except AC vital buses, in one train inoperable, the remaining AC electrical power distribution subsystem in the other train is capable of supporting the minimum safety functions necessary to shut down the reactor and maintain it in a safe shutdown condition, assuming no single failure. The overall reliability is reduced, however, because a single failure in the remaining power distribution subsystems could result in the minimum required ESF functions not being supported. Therefore, the required AC buses, and load centers must be restored to OPERABLE status within 8 hours.

Condition A worst scenario is one train without AC power (i.e., no offsite power to the train and the associated DG inoperable). In this Condition,

(continued)

BASES

ACTIONS

A.1 (continued)

the unit is more vulnerable to a complete loss of AC power. It is, therefore, imperative that the unit operator's attention be focused on minimizing the potential for loss of power to the remaining train by stabilizing the unit, and on restoring power to the affected train. This 8 hour limit is more conservative than Completion Times allowed for the vast majority of components that are without adequate AC power. Taking exception to LCO 3.0.2 for components without adequate AC power, that would have the Required Action Completion Times shorter than 8 hours if declared inoperable, is acceptable because of:

a. The potential for decreased safety if the unit operator's attention is diverted from the evaluations and actions necessary to restore power to the affected train, to the actions associated with taking the unit to shutdown within this time limit; and

b. The potential for an event in conjunction with a single failure of a redundant component in the train with AC power.

The second Completion Time for Required Action A.1 establishes a limit on the maximum time allowed for any combination of required distribution subsystems to be inoperable during any single contiguous occurrence of failing to meet the LCO. If Condition A is entered while, for instance, a DC bus is inoperable and subsequently restored OPERABLE, the LCO may already have been not met for up to 2 hours. This could lead to a total of 10 hours, since initial failure of the LCO, to restore the AC distribution system. At this time, a DC circuit could again become inoperable, and AC distribution restored OPERABLE. This could continue indefinitely.

The Completion Time allows for an exception to the normal "time zero" for beginning the allowed outage time "clock." This will result in establishing the "time zero" at the time the LCO was initially not met, instead of the time Condition A was entered. The 16 hour Completion Time is an acceptable limitation on this potential to fail to meet the LCO indefinitely.

B.1

With one AC vital bus inoperable, the remaining OPERABLE AC vital buses are capable of supporting the minimum safety functions necessary to shut down the unit and maintain it in the safe shutdown condition. Overall reliability is reduced, however, since an additional single failure could result in the minimum required ESF functions not being supported. Therefore, the required AC vital bus must be restored to OPERABLE

(continued)

BASES

ACTIONS

B.1 (continued)

status within 2 hours by powering the bus from the associated inverter via inverted DC, inverter using internal AC source, or Class 1E constant voltage transformer.

Condition B represents one AC vital bus without power; potentially both the DC source and the associated AC source are nonfunctioning. In this situation, the unit is significantly more vulnerable to a complete loss of all noninterruptible power. It is, therefore, imperative that the operator's attention focus on stabilizing the unit, minimizing the potential for loss of power to the remaining vital buses and restoring power to the affected vital bus.

This 2 hour limit is more conservative than Completion Times allowed for the vast majority of components that are without adequate vital AC power. Taking exception to LCO 3.0.2 for components without adequate vital AC power, that would have the Required Action Completion Times shorter than 2 hours if declared inoperable, is acceptable because of:

a. The potential for decreased safety by requiring a change in unit conditions (i.e., requiring a shutdown) and not allowing stable operations to continue;

b. The potential for decreased safety by requiring entry into numerous Applicable Conditions and Required Actions for components without adequate vital AC power and not providing sufficient time for the operators to perform the necessary evaluations and actions for restoring power to the affected train; and

c. The potential for an event in conjunction with a single failure of a redundant component.

The 2 hour Completion Time takes into account the importance to safety of restoring the AC vital bus to OPERABLE status, the redundant capability afforded by the other OPERABLE vital buses, and the low probability of a DBA occurring during this period.

~~The second Completion Time for Required Action B.1 establishes a limit on the maximum allowed for any combination of required distribution subsystems to be inoperable during any single contiguous occurrence of failing to meet the LCO. If Condition B is entered while, for instance, an AC bus is inoperable and subsequently returned OPERABLE, the LCO may already have been not met for up to 8 hours. This could lead to a~~

(continued)

BASES

ACTIONS

B.1 (continued)

~~total of 10 hours, since initial failure of the LCO, to restore the vital bus distribution system. At this time, an AC train could again become inoperable, and vital bus distribution restored OPERABLE. This could continue indefinitely.~~

~~This Completion Time allows for an exception to the normal "time zero" for beginning the allowed outage time "clock." This will result in establishing the "time zero" at the time the LCO was initially not met, instead of the time Condition B was entered. The 16 hour Completion Time is an acceptable limitation on this potential to fail to meet the LCO indefinitely.~~

C.1

With DC bus(es) in one train inoperable, the remaining DC electrical power distribution subsystems are capable of supporting the minimum safety functions necessary to shut down the reactor and maintain it in a safe shutdown condition, assuming no single failure. The overall reliability is reduced, however, because a single failure in the remaining DC electrical power distribution subsystem could result in the minimum required ESF functions not being supported. Therefore, the required DC buses must be restored to OPERABLE status within 2 hours by powering the bus from the associated battery or charger.

Condition C represents one train without adequate DC power; potentially both with the battery significantly degraded and the associated charger nonfunctioning. In this situation, the unit is significantly more vulnerable to a complete loss of all DC power. It is, therefore, imperative that the operator's attention focus on stabilizing the unit, minimizing the potential for loss of power to the remaining trains and restoring power to the affected train.

This 2 hour limit is more conservative than Completion Times allowed for the vast majority of components that would be without power. Taking exception to LCO 3.0.2 for components without adequate DC power, which would have Required Action Completion Times shorter than 2 hours, is acceptable because of:

a. The potential for decreased safety by requiring a change in unit conditions (i.e., requiring a shutdown) while allowing stable operations to continue;

(continued)

BASES

ACTIONS

C.1 (continued)

b. The potential for decreased safety by requiring entry into numerous applicable Conditions and Required Actions for components without DC power and not providing sufficient time for the operators to perform the necessary evaluations and actions for restoring power to the affected train; and

c. The potential for an event in conjunction with a single failure of a redundant component.

The 2 hour Completion Time for DC buses is consistent with Regulatory Guide 1.93 (Ref. 3).

The second Completion Time for Required Action C.1 establishes a limit on the maximum time allowed for any combination of required distribution subsystems to be inoperable during any single contiguous occurrence of failing to meet the LCO. If Condition C is entered while, for instance, an AC bus is inoperable and subsequently returned OPERABLE, the LCO may already have been not met for up to 8 hours. This could lead to a total of 10 hours, since initial failure of the LCO, to restore the DC distribution system. At this time, an AC train could again become inoperable, and DC distribution restored OPERABLE. This could continue indefinitely.

This Completion Time allows for an exception to the normal "time zero" for beginning the allowed outage time "clock." This will result in establishing the "time zero" at the time the LCO was initially not met, instead of the time Condition C was entered. The 16 hour Completion Time is an acceptable limitation on this potential to fail to meet the LCO indefinitely.

D.1 and D.2

If the inoperable distribution subsystem cannot be restored to OPERABLE status within the required Completion Time, the unit must be brought to a MODE in which the LCO does not apply. To achieve this status, the unit must be brought to at least MODE 3 within 6 hours and to MODE 5 within 36 hours. The allowed Completion Times are reasonable, based on operating experience, to reach the required unit conditions from full power conditions in an orderly manner and without challenging plant systems.

(continued)

LIST OF COMMITMENTS

The following table identifies actions to which Callaway Plant has committed in this document. Any other statements in this submittal are provided for information purposes and are not considered to be commitments. Questions regarding these commitments may be made to Dave Shafer, Superintendent – Licensing, at 314-554-3104.

COMMITMENT	Due Date/Event
When removing a diesel generator (DG) from service to perform voluntary, on-line, preventive maintenance under the proposed, extended allowed outage time (AOT), the following restrictions will apply: 1. Offsite power supply and switchyard conditions are to be conducive to an extended DG AOT, which includes ensuring that switchyard access is restricted and no elective maintenance within the switchyard is being performed that would challenge offsite power availability. 2. No equipment or systems assumed to be available in the probabilistic risk analysis for supporting the extended DG AOT are removed from service.	Will become effective with implementation of the approved license amendment.