Received with letter dtd 9/12/91

Waste Isolation Pilot Plant (WIPP)
Five-Year Site Specific Plan

September 1991

United States Department of Energy
Albuquerque Operations Office

9109180193 910912
PDR WASTE
WM-1 PDR

1095

FIVE-YEAR SITE SPECIFIC PLAN
WASTE ISOLATION PILOT PLANT

TABLE OF CONTENTS

Section	Description	Page
	FORWARD	1
1.0	INTRODUCTION	
1.1	Description of the Installation	2
1.2	Overview	5
1.2.1	Corrective Activities Program Overview	5
1.2.2	Environmental Restoration Program Overview	5
1.2.3	Waste Management Program Overview	5
1.2.4	Technology Development Program Overview	5
2.0	REQUIREMENTS FOR IMPLEMENTATION	5
2.1	Requirements--Federal Laws	6
2.2	Requirements--State Agreement	8
3.0	ORGANIZATION/MANAGEMENT	8
3.1	Organization	8
3.2	Management	11
4.0	CORRECTIVE ACTIVITIES	11
5.0	ENVIRONMENTAL RESTORATION	11
6.0	WASTE MANAGEMENT OPERATIONS	11
6.1	Summary	11
6.2	General Site Information	12
6.3	Radioactive and Mixed Waste Management	13
6.3.1	Waste Description	13
6.3.2	System and Facility Descriptions	15
	(A) Overview	15
	(B) Facility Descriptions	21
6.3.3	Current and Future Plans	24
6.3.4	Implementation Requirements	25
6.4	Hazardous Waste Management	26
6.4.1	System and Facility Description	26
	(A) Overview	26
	(B) Facility Description	26
6.4.2	Current and Future Plans	27
6.5	Schedule and Cost Summary	27
6.6	Waste Management Documentation Requirements	30
7.0	TECHNOLOGY DEVELOPMENT	31
8.0	COMPLIANCE WITH THE NATIONAL ENVIRONMENTAL POLICY ACT	31
8.1	The National Environmental Policy Act Documents	31
8.2	Costs and Schedules	32

FIVE-YEAR SITE SPECIFIC PLAN
WASTE ISOLATION PILOT PLANT

TABLE OF CONTENTS

Section	Description	Page
9.0	REPORTING AND RECORDS MANAGEMENT	
9.1	Reports	32
9.2	Maintenance of Records	32
9.3	Maintenance of Samples	32
10.0	QUALITY ASSURANCE	32
11.0	FEDERAL, STATE, AND LOCAL INTERACTIONS	34
APPENDIX A	SECRETARY OF ENERGY'S DRAFT DECISION PLAN FOR WIPP	A-1
APPENDIX B	LISTING OF FY 1991 AND FY 1992 WIPP REPORTS	B-1
APPENDIX C	LISTING OF WIPP INTERFACES	C-1
APPENDIX D	GLOSSARY OF ACRONYMS AND ABBREVIATIONS	D-1

FIVE-YEAR SITE SPECIFIC PLAN
WASTE ISOLATION PILOT PLANT

LIST OF FIGURES

Figure	Description	Page
1.1-1	General Location of the WIPP Facility	3
1.1-2	WIPP Facility Boundaries	4
2.2-1	Summary of State of New Mexico Agreements	9
6.3.2-1	WIPP Layout	17
6.3.2-2	WIPP Geologic Profile	18
6.3.2-3	WIPP CH Waste Flow Diagram	19
6.3.2-4	WIPP RH Waste Flow Diagram	20
6.3.2-5	WIPP Surface Structures	22
6.3.2-6	Waste Handling Building Plan	23
6.5-1	WIPP Waste Management Funding Summary	28
6.5-2	WIPP Milestone Schedule	29
8.2-1	NEPA-Related Costs and Schedule	33

FOREWARD

This is the second in a series of annual Site Specific Plans (SSPs) that will follow the Department of Energy's (DOE) annual Environmental Restoration and Waste Management (ER/WM) Five-Year Plan (FYP). Types of ER/WM projects described in this plan include Corrective Activities, Environmental Restoration, Waste Management and Technology Development. The Technology Development section is new to this year's plan and is applicable to only some installations. Technology Development programs seek to resolve major technical issues and rapidly advance beyond current technologies for ER/WM activities.

Utilizing the DOE's ER/WM FYP, dated August 1991 as a foundation, this SSP includes a description of projects and planning information for Fiscal Year (FY) 1991 through FY 1997, with particular emphasis on FY 1992. Individuals should focus their review of this document on an evaluation of the FYP planning and implementation process. Additionally, evaluation of the specific program scope, schedules, and costs should utilize the specific installation's Activity Data Sheets available at public reading rooms located near each DOE installation.

It should be noted that the proposed plans described in this document are subject to change for the following reasons: 1) the results of more detailed field characterization or other unforeseen field conditions may necessitate a different remedial action approach, 2) regulatory requirements may change, or 3) necessary project funds may be delayed. Changes to last year's SSPs are reflected in this plan.

We appreciate your cooperation in working with the DOE and sharing our common goals of elimination of potential environmental hazards to the public and compliance with applicable regulatory requirements as expeditiously as possible. Your suggestions and recommendations are most welcome. Comments regarding this Site Specific Plan may be directed to:

Patty Baratti-Sallani
Public Affairs Office
U.S. Department of Energy
WIPP Project Office
P.O. Box 3090
Carlsbad, New Mexico 88221-3090

or to:

Patrick J. Higgins, Jr.
Director, Environmental Management Staff
U.S. Department of Energy
Albuquerque Operations Office
P.O. Box 5400
Albuquerque, New Mexico 87115

FIVE-YEAR SITE SPECIFIC PLAN
WASTE ISOLATION PILOT PLANT

1.0 INTRODUCTION

1.1 Description of the Installation

The Waste Isolation Pilot Plant (WIPP), located 26 miles east of Carlsbad, New Mexico, is a research and development facility vested with the vital mission of demonstrating the safe disposal of radioactive transuranic (TRU) wastes resulting from our nation's defense activities and programs. It is the only facility in the United States specifically designed and constructed for the long-term storage of transuranic wastes. WIPP is essential to our national defense programs and is the solution to the growing problem of how to safely and efficiently dispose of radioactive waste in an environmentally sound manner. The WIPP was originally established in December of 1979 by Public Law 96-164. See section 2.1 below for additional details on this Public Law. Since the inception of the WIPP project, work has continued to prepare the facility to receive TRU waste. A multitude of studies have been and continue to be conducted to demonstrate the safety of the WIPP facility in accordance with federal and state laws, state agreements, DOE Orders, etc. This Site Specific Plan outlines the implementation of activities at the WIPP project. The reader should keep in mind that actions and issues were addressed with the best information available as of the date of this plan. The dynamics of the WIPP project require flexibility as it applies first time technology and adapts to newly discovered information. Any changes will be addressed in future updates to this plan.

The WIPP facility is located in eastern Eddy County, New Mexico, as indicated in Figures 1.1-1 and 1.1-2. It is in an area of low population density with less than 30 permanent residents living within a ten-mile radius of the facility. The surrounding area is used primarily for cattle grazing and potash, oil, and gas development.

The WIPP site covers 10,240 acres of federal land within a four-mile square as shown in Figure 1.1-2. An area of 1,454 acres in the center of the site is for the exclusive use of the DOE. The 35-acre property (Zone I) containing most of the WIPP facility surface structures is located near the center of this exclusive use area, and is surrounded with a chain link fence. A detailed description of site location,

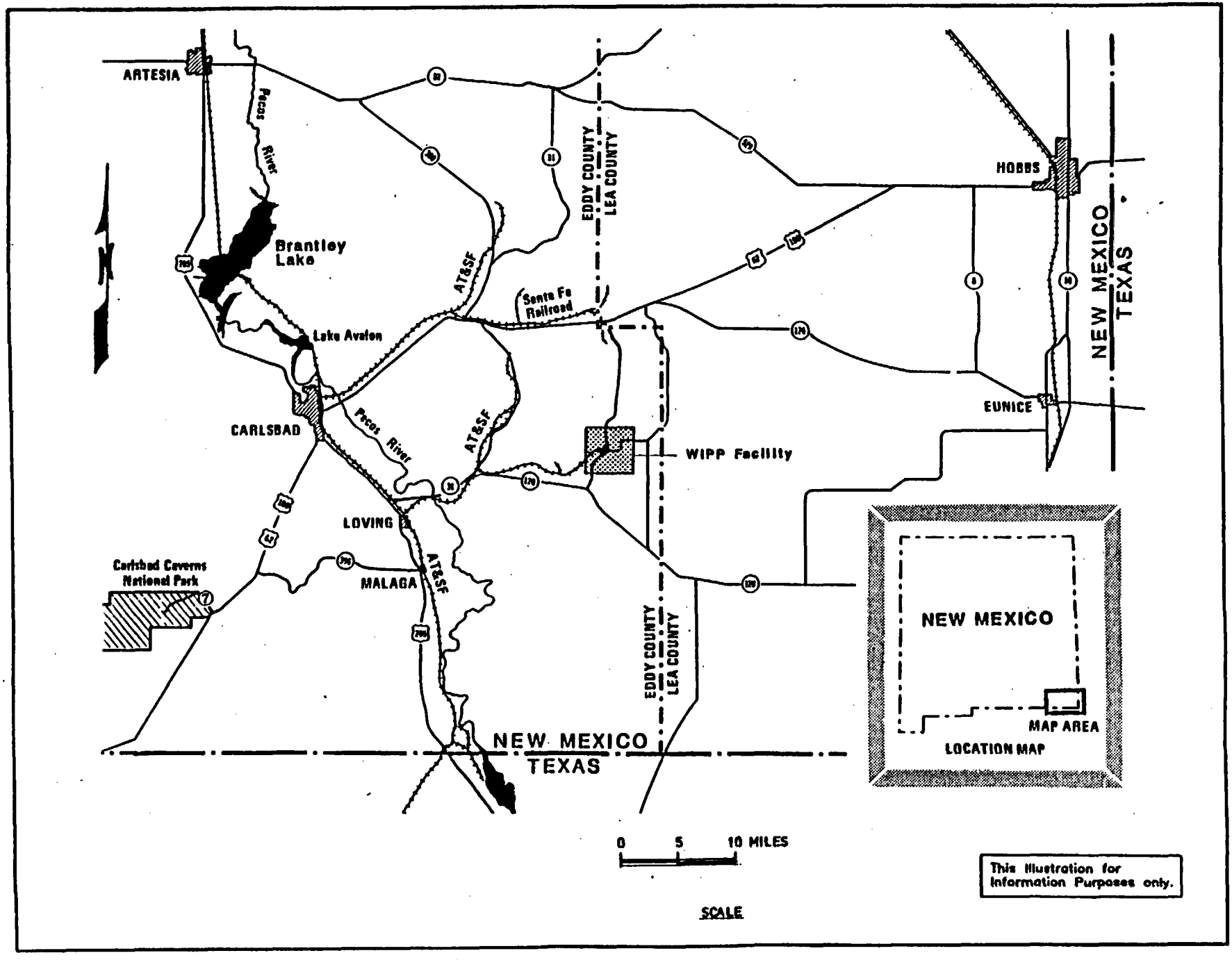

FIGURE 1.1-1
General Location of the WIPP Facility

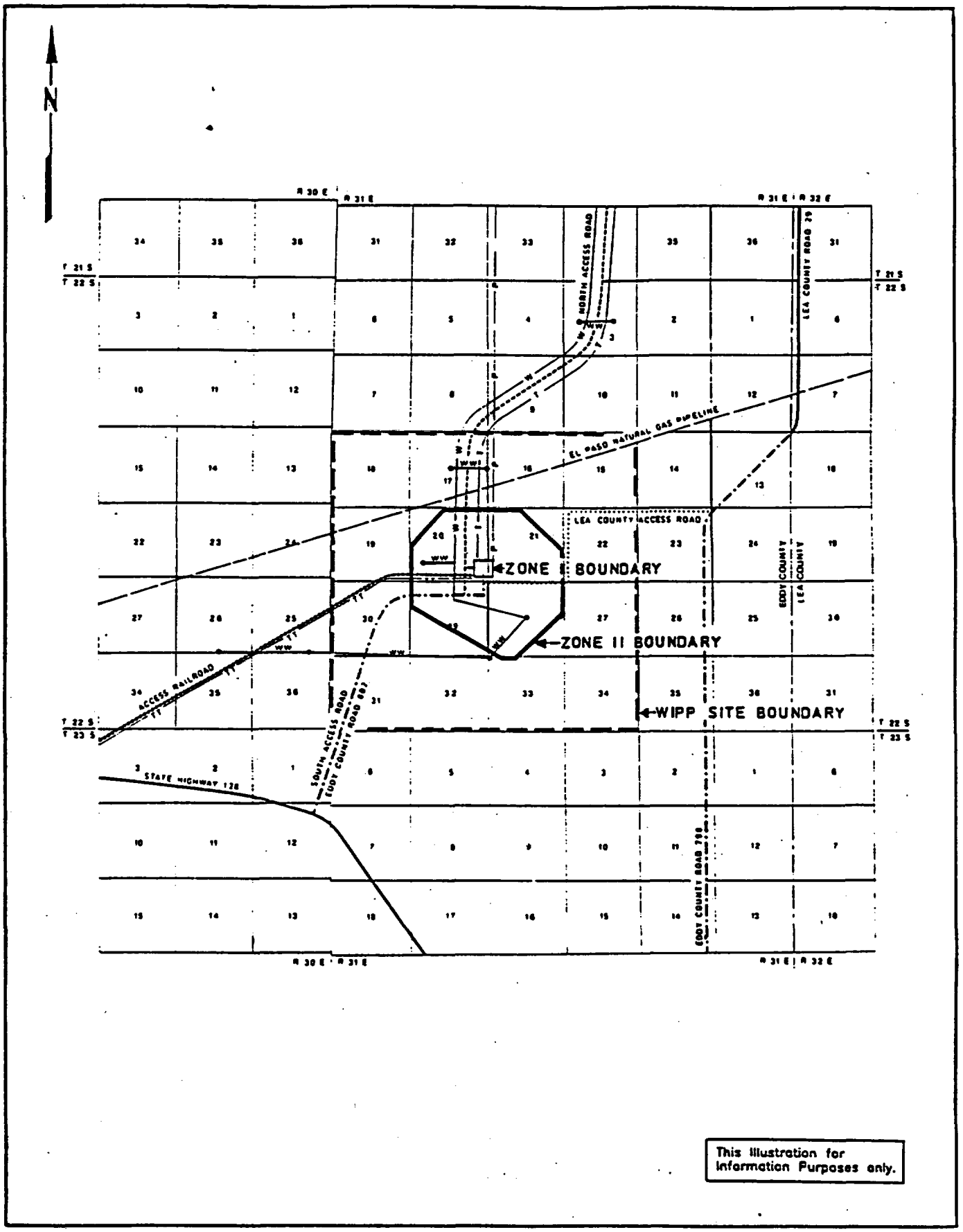

FIGURE 1.1-2
WIPP Facility Boundaries

1.1 Continued

demography size, geographic features, climate, and geologic and hydro-geologic conditions can be found in the three-volume WIPP Final Safety Analysis Report, WP 02-9.

1.2 Overview

1.2.1 Corrective Activities Program Overview

WIPP does not have any activities that receive Corrective Activity funding.

1.2.2 Environmental Restoration Program Overview

WIPP does not have any activities that receive Environmental Restoration funding.

1.2.3 Waste Management Program Overview

WIPP is the only waste management facility in the United States specifically designed and constructed for the permanent disposal of transuranic wastes. During the WIPP Test Phase, the primary objective of this new facility is to emplace TRU waste (1) for demonstration of safe operations and retrievability in compliance with DOE Orders, other applicable environmental standards, and state agreements; and (2) to collect data from experiments to support a demonstration of compliance with long-term performance standards in applicable environmental regulations. No radioactive TRU waste presently exist at WIPP. However, TRUPACT deliveries of TRU contact-handled (CH) waste for test purposes are planned to start in the fourth quarter of FY 1991. Currently, the TRU wastes temporarily stored at ten defense locations around the United States until shipments to WIPP can begin. The ultimate goal of the Test Phase is a favorable decision to declare WIPP as the nation's first deep geologic repository for the permanent disposal of TRU waste.

1.2.4 Technology Development Program Overview

WIPP does not currently have any activities that receive Technology Development funding.

2.0 REQUIREMENTS FOR IMPLEMENTATION

Listed below are the major requirements for the WIPP program that mandate specific programmatic activities or direction.

2.1 Requirements--Federal Laws

Public Law 96-164 - DOE National Security and Military Applications of Nuclear Energy Authorization Act of 1980, Section 213 outlined below:

> Waste Isolation Pilot Plant, Delaware Basin, New Mexico
>
> Sec. 213.(a) The Secretary of Energy shall proceed with the Waste Isolation Pilot Plant construction project authorized to be carried out in the Delaware Basin of southeast New Mexico (project 77-13-f) in accordance with the authorization for such project as modified by this section. Notwithstanding any other provision of law, the Waste Isolation Pilot Plant is authorized as a defense activity for the Department of Energy, administered by the Assistant Secretary of Energy for Defense Programs. The express purpose of the plant is to provide a research and development facility to demonstrate the safe disposal of radioactive wastes, resulting from the defense activities and programs of the United States exempt from regulation by the Nuclear Regulatory Commission.
>
> (b)(1) In carrying out such a project, the Secretary shall consult and cooperate with the appropriate officials of the State of New Mexico, regarding public health and safety concerns of the State in regard to such project and shall, consistent with the purposes of subsection (a), give consideration to such concerns and cooperate with such officials in resolving such concerns. The consultation and cooperations required by this paragraph shall be carried out as provided in paragraph (2).
>
> (2) The Secretary shall seek to enter into a written agreement with the appropriate officials of the State of New Mexico, as provided by the laws of the State of New Mexico, not later than September 30, 1980, setting forth the procedures under which the consultation and cooperation required by paragraph (1) shall be carried out. Such procedures shall include as a minimum -
>
> > (A) the right of the State of New Mexico to comment on, and make recommendations with regard to, the public health and safety aspects of such project before the

2.1 Continued

occurrence of certain key events identified in the agreement.
(B) time frames for the Secretary to receive, consider, resolve, and act upon comments and recommendations made by the State of New Mexico, and
(C) methods for the Secretary and the appropriate officials of the State of New Mexico to periodically review, amend, or modify the agreement.

(3) As soon as practicable after the date on which the agreement referred to in paragraph (2) is entered into by the Secretary and the appropriate officials of the State of New Mexico, but not more than 15 days after such date, the Secretary shall transmit to the Committees on Armed Services of the Senate and the House of Representatives copies of such agreement, and a period of 45 days shall elapse while Congress is in session before such agreement becomes effective unless the Committees on Armed Services of the Senate and the House of Representatives, in writing, waive any portion of such 45-day period. The Secretary shall promptly notify such committees of any amendment or modification made to such agreement under paragraph (2)(C).

(c) No law enacted after the date of the enactment of this Act shall be held, considered, or construed as amending, superseding, or otherwise modifying any provision of this section unless such law does so by specifically and explicitly amending, repealing, or superseding this section.

Approved December 29, 1979.

Resource Conservation and Recovery Act of 1976 (RCRA)

Federal Land Policy and Management Act (FLPMA)

Environmental Radiation Protection Standards for Management and Disposal of Spent Nuclear Fuel, High-Level, and Transuranic Radioactive Wastes (40 CFR Part 191)

Code of Federal Regulations 49, Transportation, Parts 160-179.

Clean Air Act, as amended.

2.1 Continued

Public Land Order 6826, dated January 28, 1991, 56 FR 3038

2.2 Requirements--State Agreement

The DOE has executed a Consultation and Cooperation (C&C) Agreement with the state of New Mexico. The agreement outlines the working relationship between the WIPP and the state.

The C&C Agreement was entered into by the DOE and the state pursuant to the "Consultation and Cooperation" requirements of Public Law 96-164. It affirms the intent of the Secretary of Energy to consult and cooperate with the Governor of New Mexico with respect to the state's health and safety concerns about the WIPP project. The purpose of the C&C Agreement is threefold: (1) to designate "Key Events," (2) to set time frames for review and comment by the state, and resolution of comments; and (3) to establish procedures for state review and DOE/state conflict resolution. A Key Event is defined as "a significant activity in the development, design, construction, operation, and decontamination and decommissioning of the WIPP."

Agreements between the DOE and the state of New Mexico which affect the WIPP Environmental Program are summarized in Figure 2.2-1.

3.0 ORGANIZATION/MANAGEMENT

3.1 Organization

WIPP has a single-purpose mission, and all interfaces, lines of authority and communications, and assigned responsibilities for every organization are focused on the waste management functions. The organizational sections pyramid to the head managers of the performing contractors, Westinghouse Electric Corporation Waste Isolation Division (WID), and Sandia National Laboratories (SNL), which report to the WIPP Project Office, DOE Project Manager. Westinghouse is the Management and Operating Contractor at WIPP and as such is responsible for the overall project operations, engineering, safety, cost/schedule monitoring, and reporting to the DOE. SNL is the Scientific Advisor at the WIPP and is responsible for site characterization, experimental programs, and other activities. The Albuquerque Field Office, Assistant Manager for Energy and Special Programs, oversees the WIPP Project. This hierarchy has direct lines of reporting and responsibilities.

SUMMARY OF AGREEMENTS BETWEEN DOE AND THE STATE OF NEW MEXICO WHICH AFFECT THE ENVIRONMENTAL PROGRAM

- Stipulated Agreement. This agreement, approved by the U.S. District Court when it stayed (held in abeyance) proceedings in the lawsuit against the DOE by the state, was executed on July 1, 1981. The eight-page agreement assures that a binding, enforceable "consultation and cooperation" agreement will be entered into by the DOE and the state and that the DOE will make a "good faith effort" to resolve certain state off-site concerns (which are covered in the Supplemental Stipulated Agreement). The Stipulated Agreement also addresses a number of additional studies and experiments to be conducted by the DOE for the Site Preliminary Design Validation (SPDV) phase of the WIPP.

- Agreement for Consultation and Cooperation. Usually referred to as the "C&C Agreement," this agreement is contained in Appendix A to the Stipulated Agreement. It affirms the intent of the Secretary of Energy to consult and cooperate with New Mexico with respect to state public health and safety concerns.

- Working Agreement for Consultation and Cooperation. This agreement, Appendix B to the Stipulated Agreement, identifies in Article IV over 60 "key events" and "milestones" in the construction and operation of the WIPP which must be reviewed by the state before they are commenced. Many environmental items are included. (Article IV of the Working Agreement was revised on April 8, 1983.)

- Supplemental Stipulated Agreement Resolving Certain State Off-Site Concerns Over WIPP. This agreement, dated December 27, 1982, addresses five state concerns including the need for state "verification" of the WIPP operational environmental monitoring program. The concerns addressed are: state liability (for a nuclear incident); emergency response preparedness; transportation monitoring of the WIPP waste; the WIPP environmental monitoring by the state; and upgrading of state highways.

- First Modification to the Agreement for Consultation and Cooperation. Signed November 30, 1984, wherein the DOE and the state agree to address certain concerns of the state regarding: (1) the specific mission of the WIPP, (2) a demonstration of irretrievably prior to waste emplacement, (3) post-closure control and responsibility, (4) completion of certain additional scientific testing and reports, (5) compliance with applicable Federal regulatory standards for waste repositories, and (6) a program for encourag- ing and reporting upon the hiring of New Mexico residents at the WIPP.

- Second Modification to the Agreement for Consultation and Cooperation. Signed August 4, 1987, wherein the DOE and the state agree to address certain concerns of the state regarding: (1) surface and subsurface mining and drilling after closure of the WIPP site, (2) the disposal of salt tailings at the WIPP site, and (3) compliance with Environmental Protection Agency (EPA), Department of Transportation (DOT), and Nuclear Regulatory Commission (NRC) regulations.

- 1988 Modification to the Working Agreement of the Consultation and Cooperation Agreement Between the Department of Energy and the State of New Mexico on the Waste Isolation Pilot Plant. Signed March 1988, this modification deleted the sorbing tracer test from the list of required reports and substituted additional tests. In addition, the state is allowed to operate a fixed air sampler in the mine ventilation effluent air stream.

FIGURE 2.2-1
Summary of State of New Mexico Agreements

3.1 Continued

The following is a representation of this hierarchy:

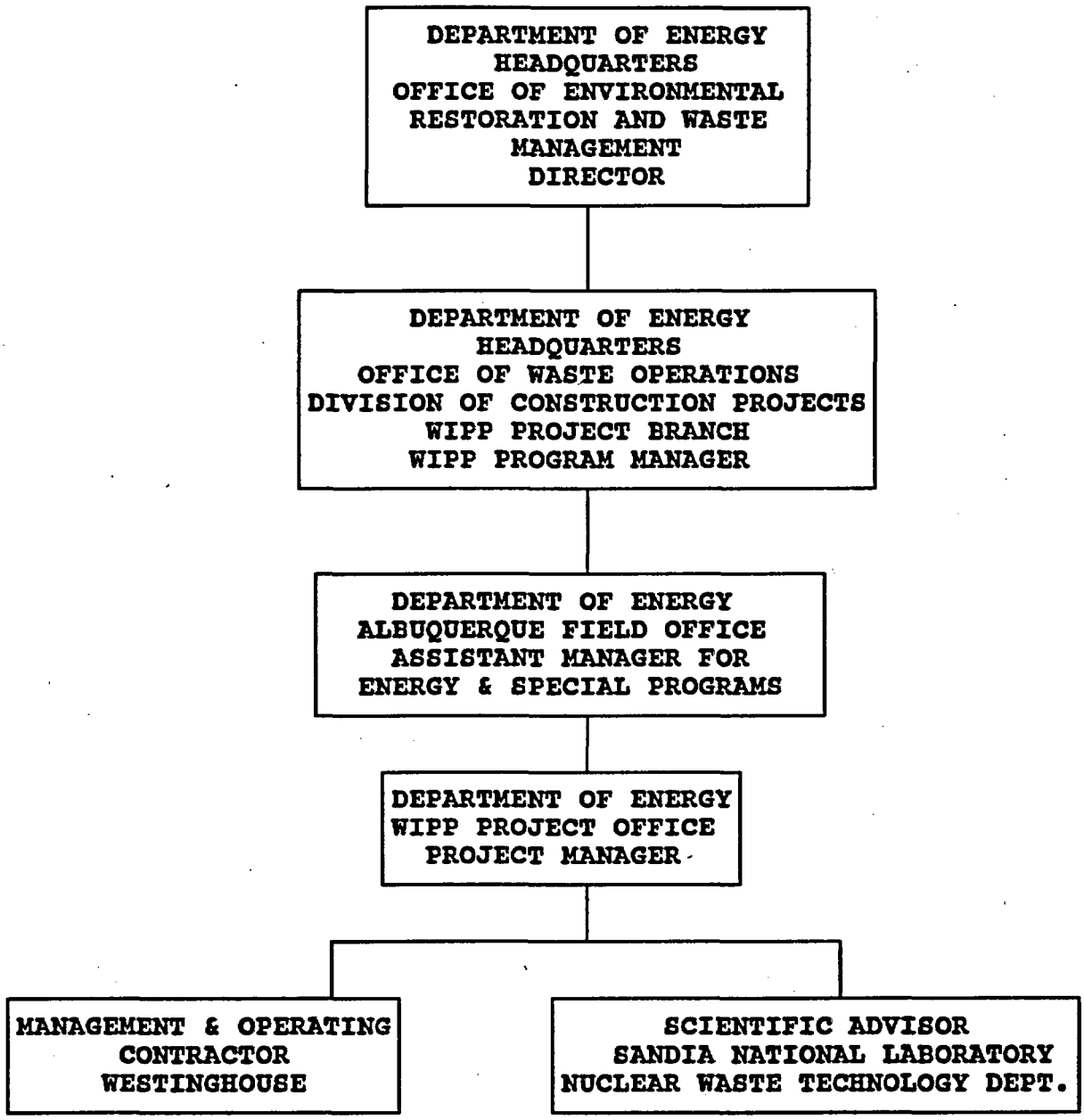

3.2 Management

The performing contractors maintain a Project Master Summary Schedule that integrates activities to meet the WIPP mission. A modified Cost/Schedule Control System Criteria is maintained with lower levels of details to integrate scope, schedule, and budget, as well as the resulting performance. The WIPP is governed by and is in compliance with DOE Order 4700.1, Project Management System, which establishes the need for project management tools such as a work breakdown structure, monthly progress reporting, and cost controls and reporting.

4.0 CORRECTIVE ACTIVITIES

WIPP has no activities in this program.

5.0 ENVIRONMENTAL RESTORATION

WIPP has no activities in this program.

6.0 WASTE MANAGEMENT OPERATIONS

6.1 Summary

On June 27, 1989, the Secretary of Energy announced that the WIPP's opening date will be determined after additional independent reviews of the facility have been conducted, and when he and key reviewers from outside the DOE are satisfied that the facility is safe. The requirements to be completed for the opening of WIPP to receive CH TRU waste for the Test Phase are shown in the Secretary's Draft Decision Plan for WIPP. See Attachment A. The WIPP's goal is to complete all Draft Decision Plan requirements as early as July 31, 1991, so that delivery of CH TRU waste for Test Phase bin-scale experiments can begin.

Bin-scale experiments for the WIPP performance assessment will continue into FY 1995. The entire WIPP Test Phase may take five years or longer to complete. The No-Migration Determination, issued by the Environmental Protection Agency (EPA) in November 1990, limits the amount of waste that can be emplaced during the Test Phase to 1 percent of WIPP's capacity.

The Congress of the United States is currently acting on a WIPP land withdrawal bill to transfer public land from the Bureau of Land Management to the exclusive control of the DOE. This legislative land withdrawal bill may further limit the amount of CH TRU waste

6.1 Continued

that can be received at WIPP during the Test Phase.

6.2 General Site Information

The WIPP, located 26 miles east of Carlsbad, New Mexico, is a research and development facility vested with the vital mission of demonstrating the safe disposal of radioactive TRU wastes resulting from our nation's defense activities and programs. It is the only facility in the United States specifically designed and constructed for the permanent disposal of transuranic wastes. WIPP is essential to our national defense program and is a solution to the growing problem of how to safely dispose of radioactive waste in an environmentally sound manner.

The research and development (R&D) efforts are an integral part of the overall success of the WIPP project and are funded by the Office of Environmental Restoration and Waste Management (EM). These activities provide the necessary information to support performance assessment and radiological testing to prove and confirm the design viability of WIPP. The R&D efforts will provide information to answer necessary questions to satisfy the public at large and meet 40 CFR 191, Subpart B of the EPA regulations. The waste R & D activities within the WIPP project have three fundamental objectives. These are:

- Resolve technical issues relevant to geologic disposal of defense nuclear wastes in salt (particularly at WIPP), evaluate predictions and predictive capabilities based on comparisons of experiment results and model predictions, and develop comprehensive data bases for the performance assessment of WIPP;

- Extend, refine, and document the geotechnical understanding of the WIPP site and environs through activities that develop a more comprehensive knowledge of geologic and hydrologic processes which may affect the WIPP area both now and in the near geologic future; and

- Develop performance assessments of WIPP that address realistic formulations of future performance using existing data and models, where adequate, and develop that information capability where it is not now adequate for final assessment evaluations.

6.2 Continued

These activities will provide the requirements to establish WIPP as the nation's first deep geologic repository for TRU waste. They will also enhance compliance or improve implementation.

During the WIPP Test Phase the primary objective of this new facility is to emplace TRU waste (1) for demonstration of safe operations and retrievability in compliance with DOE Orders, other applicable environmental standards, and state agreements; and (2) to provide information in support of a demonstration of compliance with long-term performance standards in 40 CFR 191, Subpart B. Currently, the TRU waste is temporarily stored at ten defense locations around the United States until shipments to WIPP begin. The ultimate goal of the WIPP Test Phase is a favorable decision to determine whether WIPP can be declared as the nation's first deep geologic repository for the permanent disposal of TRU waste.

6.3 Radioactive and Mixed Waste Management

6.3.1 Waste Description

The WIPP facility is designed to receive, store, and, if necessary during the Test Phase, retrieve CH TRU and remote-handled (RH) TRU waste transported from ten national defense facilities located throughout the United States.

TRU waste is radioactive waste that, without regard to source or form, is contaminated with alpha-emitting transuranic radionuclides with half-lives greater than 20 years and in concentrations greater than 100 nanocurie per gram (nCi/g) of waste. The criteria by which TRU waste will be accepted for emplacement at the WIPP facility and a description of the basis upon which these criteria were established are presented in the document "TRU Waste Acceptance Criteria for the WIPP," WIPP/DOE-069. The characteristics of CH and RH TRU waste are summarized in the "WIPP Final Safety Analysis Report," WP 02-9.

CH TRU waste refers to TRU waste materials that are packaged in such a way that the dose rate at the surface of the waste package is not greater than 200 millirem per hour (mRem/hr). CH TRU waste shipped to WIPP will be contained in 55-gallon drums and metal standard waste

6.3.1 Continued

boxes that are required to have a nominal life of 20 years from the date of waste certification to allow for intact container retrieval. CH TRU waste containers have a relatively low surface dose rate and, therefore, lend themselves to direct contact handling.

CH TRU waste received for placement at the WIPP facility during the initial experimentation and demonstration period, which is referred to as the Test Phase, will conform to the requirements of the WIPP Waste Acceptance Criteria (WAC). The CH TRU waste will be transported to WIPP in Nuclear Regulatory Commission (NRC)-certified shipping containers. Some of the CH TRU waste used for Test Phase experiments will be packaged and transported in special bins, not drums.

The RH TRU waste contains beta- and gamma-emitting radioisotopes and, typically, has a measured radiation dose rate at the container surface that ranges from greater than 200 mRem/hr to a maximum of 1000 Rem/hr. Five percent of the RH TRU waste to be certified for emplacement at the WIPP facility may have a surface dose rate of over 100 Rem/hr. The RH TRU waste will be shipped to WIPP in NRC-certified shielded casks. Shipments of RH TRU waste for operational demonstrations are planned to start near the end of the Test Phase period.

Current projections indicate that about 60 percent of all TRU waste destined for the WIPP facility contain, as cocontaminants, hazardous waste as defined by the Resource Conservation and Recovery Act (RCRA). This radioactive mixed waste will be subject to regulation by the EPA or an authorized state agency.

Dual regulation of radioactive mixed waste coming to the WIPP facility (i.e., regulation under the Atomic Energy Act and the RCRA) has not resulted in a change in the characteristics of the waste, nor has there been any change in the configuration of the WIPP facility. Instead, it results in administrative and operational changes such as additional record keeping, reporting, and training. Also, it has

6.3.1 Continued

become necessary to characterize the hazardous constituents in this waste for purposes of manifesting it for transportation, for reporting waste disposal activities, and for ensuring adequate health and safety programs. TRU waste placed in the WIPP facility during the Test Phase will be readily retrievable. In this way, should the DOE decide that, at the end of the Test Phase, the WIPP facility is not the appropriate location for the permanent isolation of these wastes, they can be removed. Such retrieval may take twice as long as the emplacement operations, depending on the quantity of waste involved. Therefore, one operating scenario may involve on the order of 15 years of waste handling operations, five years for emplacement, and ten years for retrieval.

The full design capacity of the WIPP facility to receive TRU waste over the 25-year operating life is about 6,200,000 cubic feet of CH TRU waste in 55-gallon drums and metal standard waste boxes. It also has sufficient capacity to handle the presently planned 250,000 cubic feet of RH TRU waste packaged in 26-inch diameter steel canisters with an overall length of 10 feet. It is currently estimated that approximately 7,500 canisters of RH TRU waste will be placed in the repository over the operating period.

6.3.2 System and Facility Descriptions

(A) Overview

The WIPP facility is authorized by Public Law 96-164 with the mission to provide "a research and development facility to demonstrate the safe disposal of radioactive wastes resulting from the defense activities and programs of the United States." The WIPP facility is intended to include receipt, handling, and permanent disposal of TRU waste. In implementing this mission, the DOE has designed the WIPP facility as a full-scale facility to demonstrate many technical and operational principles associated with the permanent isolation of TRU waste. Technical aspects are those associated with the design, construction, and performance of the structures

6.3.2 Continued

and the mined repository; operational aspects are those associated with receiving, handling and emplacing TRU wastes. It is also designed to provide a facility in which studies and experiments related to radioactive waste disposal can be conducted to extend the understanding of the behavior of radioactive waste in salt.

The full design disposal capacity of the WIPP facility will not be utilized until sufficient operating and scientific data have been accumulated to ensure the safe, long-term disposal of radioactive waste in salt. Within a test period of about five-years referred to as the Test Phase, a decision, based on the ability of the WIPP facility to meet EPA standards covering the disposal of TRU waste, will be reached either to dispose permanently of TRU waste at the WIPP facility or to retrieve the waste.

CH TRU and RH TRU waste will be stored at the WIPP facility in a 100-acre storage area on a horizon located 2150 feet beneath the surface in a deep, bedded salt formation. Waste will be transferred from the surface to the storage horizon through a waste shaft using a hoisting arrangement. See Figure 6.3.2-1 for the WIPP facility layout. Figure 6.3.2-2 shows the geologic profile at WIPP, and indicates the location of the underground waste repository level. A schematic flow diagram of the CH TRU waste management operations sequence is shown in Figure 6.3.2-3. The RH TRU waste management operations sequence is shown in Figure 6.3.2-4.

The WIPP facility is designed for an operating life of 25 years. The facility and equipment are designed to allow for retrieval of TRU waste stored during the Test Phase. The design accommodates the time required to reach the waste and retrieve the waste, if such a decision is made. The amount of TRU waste to be handled during the Test Phase has been limited to 1 percent of the capacity of the WIPP.

Decontamination of radioactivity and decommissioning activities will be performed either after retrieval, or if it is decided to operate the WIPP, after completion of its

WIPP LAYOUT

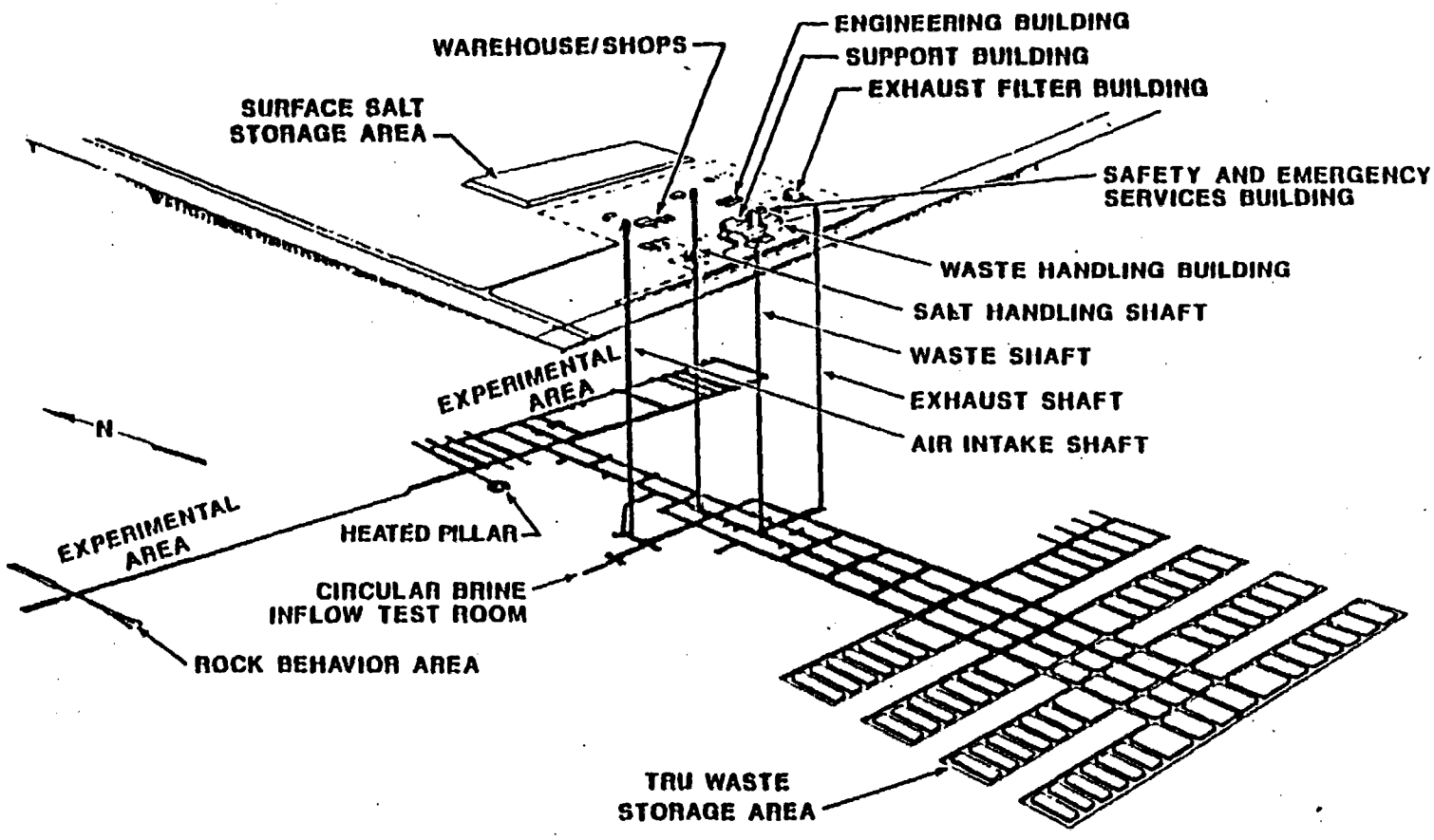

291R:4975

FIGURE 6.3.2-1
WIPP Layout

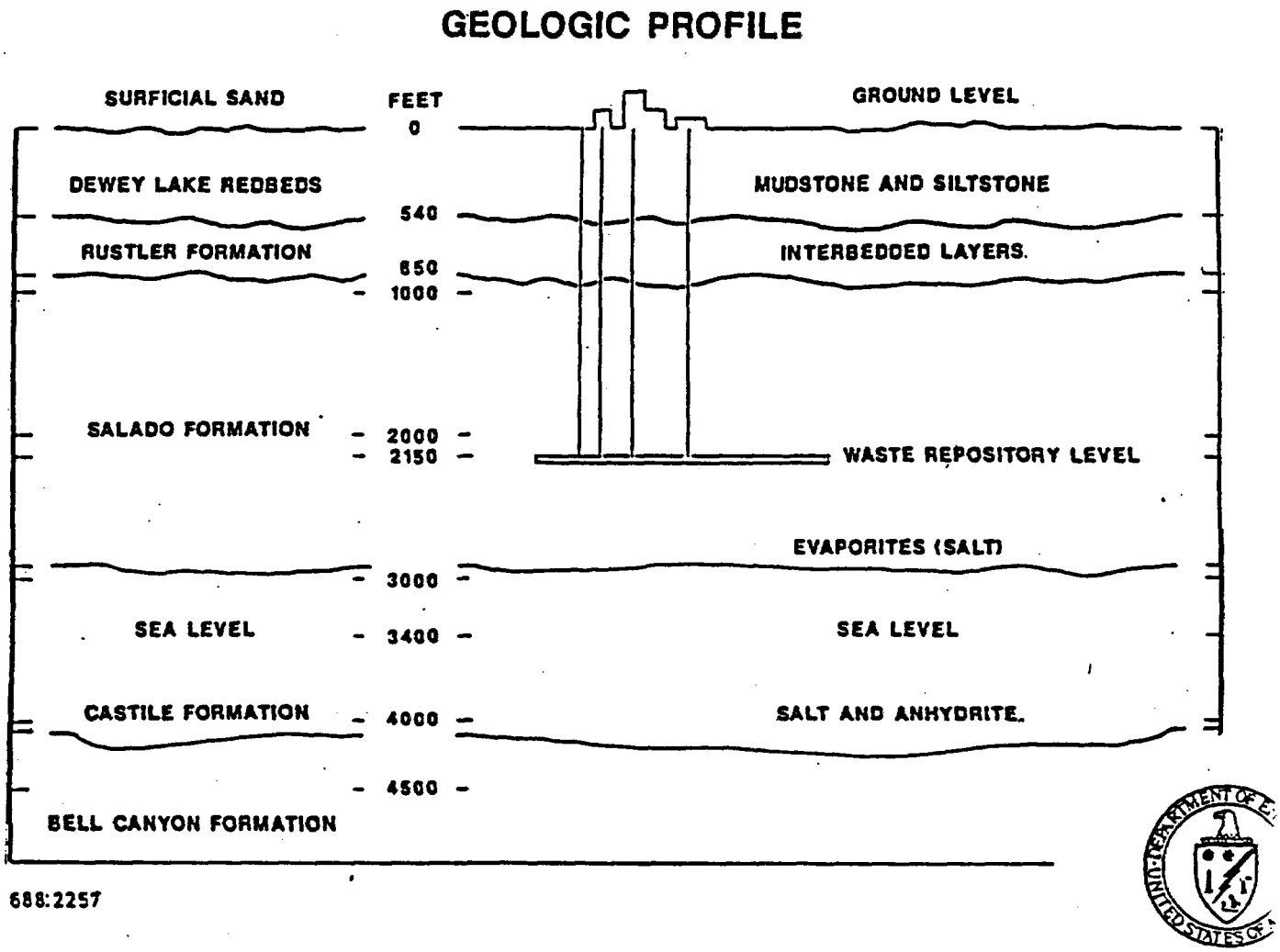

FIGURE 6.3.2-2
WIPP Geologic Profile

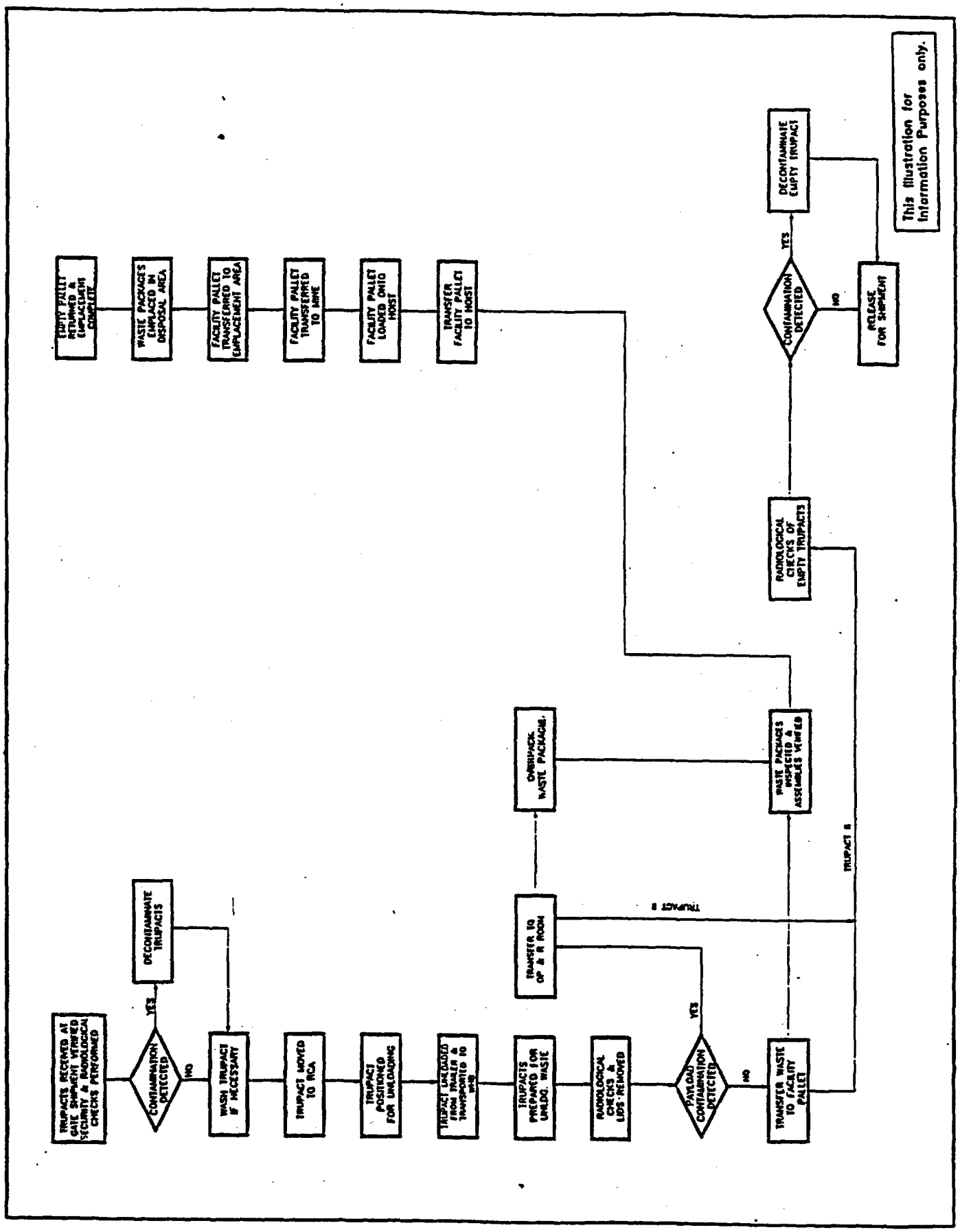

FIGURE 6.3.2-3
WIPP CH Waste Flow Diagram

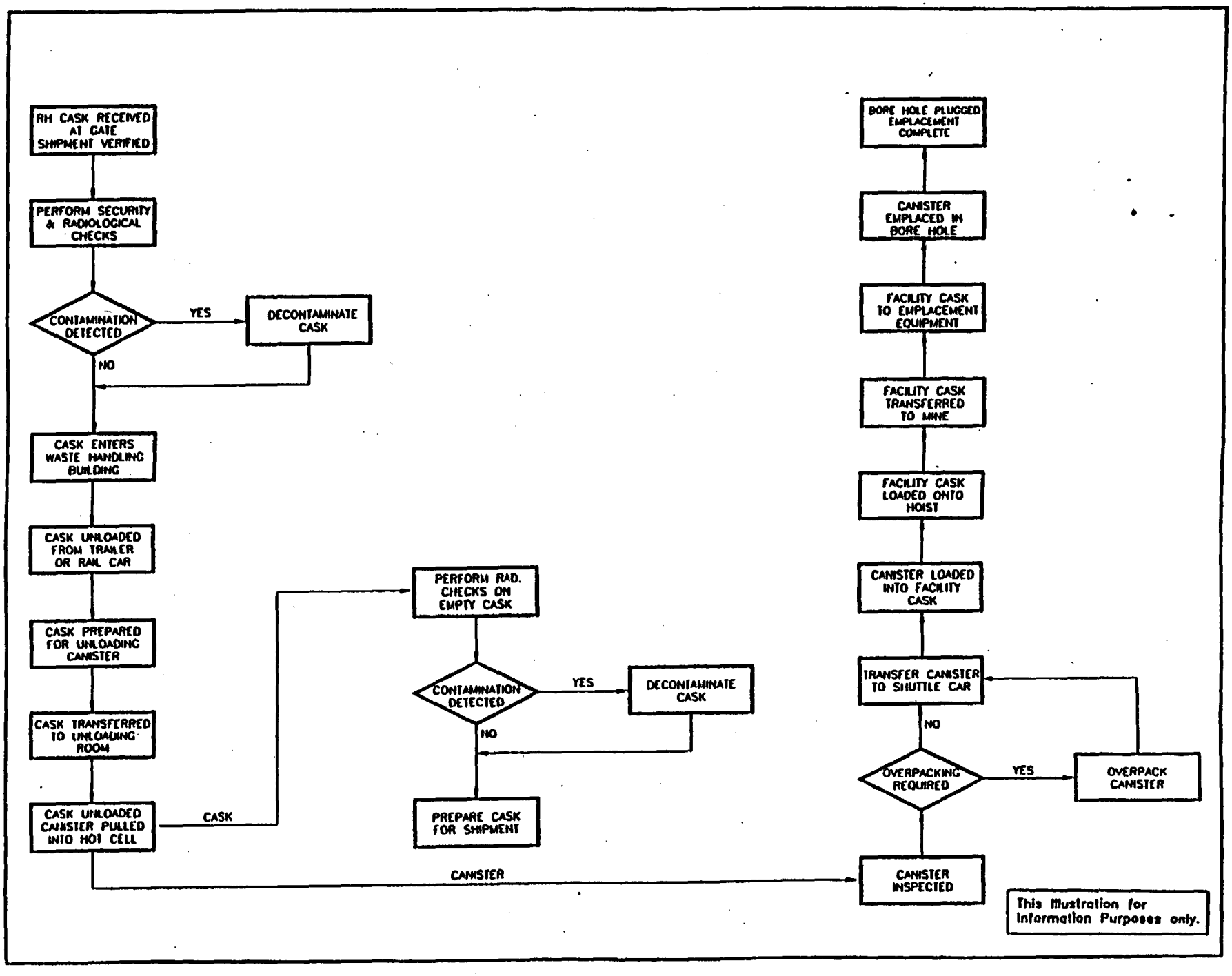

FIGURE 6.3.2-4
WIPP RH Waste Flow Diagram

operational phase. Options for decommissioning include moth balling or dismantling surface facilities, backfilling and sealing shafts, and backfilling underground areas. After decommissioning, no other active waste disposal activities will be conducted at the WIPP facility.

(B) Facility Descriptions

The WIPP facility includes surface structures, shafts, and underground areas. Surface structures are located in a 35-acre area within a perimeter security fence as shown in Figure 6.3.2-5. These structures accommodate the personnel, equipment, and support services required for the receipt, preparation, and transfer of waste from the surface to the underground storage area.

The primary surface waste management systems operations at the WIPP facility are conducted in the Waste Handling Building (WHB) (Figure 6.3.2-6), which is divided into several separate areas: the CH TRU waste handling area, the RH TRU waste handling area, and support areas.

The CH TRU waste handling area includes an outdoor truck loading and offloading area, a shielded storage room, an inventory and preparation area, and an overpack and repair room.

The RH TRU waste handling area includes a shipping and receiving area, and a shielded cell for shipping cask unloading, waste canister inspection, canister overpacking (if required), and facility cask loading prior to transfer underground.

The WHB support areas includes a place where radiologically contaminated materials generated by sampling during Test Phase experiments, or by a radiological incident, can be processed and packaged. All radiologically contaminated waste generated at the WIPP will be managed and disposed of as TRU waste, regardless of its radiological concentration.

The function of the WHB, and its associated systems, is to provide a structure to unload

WIPP SURFACE FACILITIES

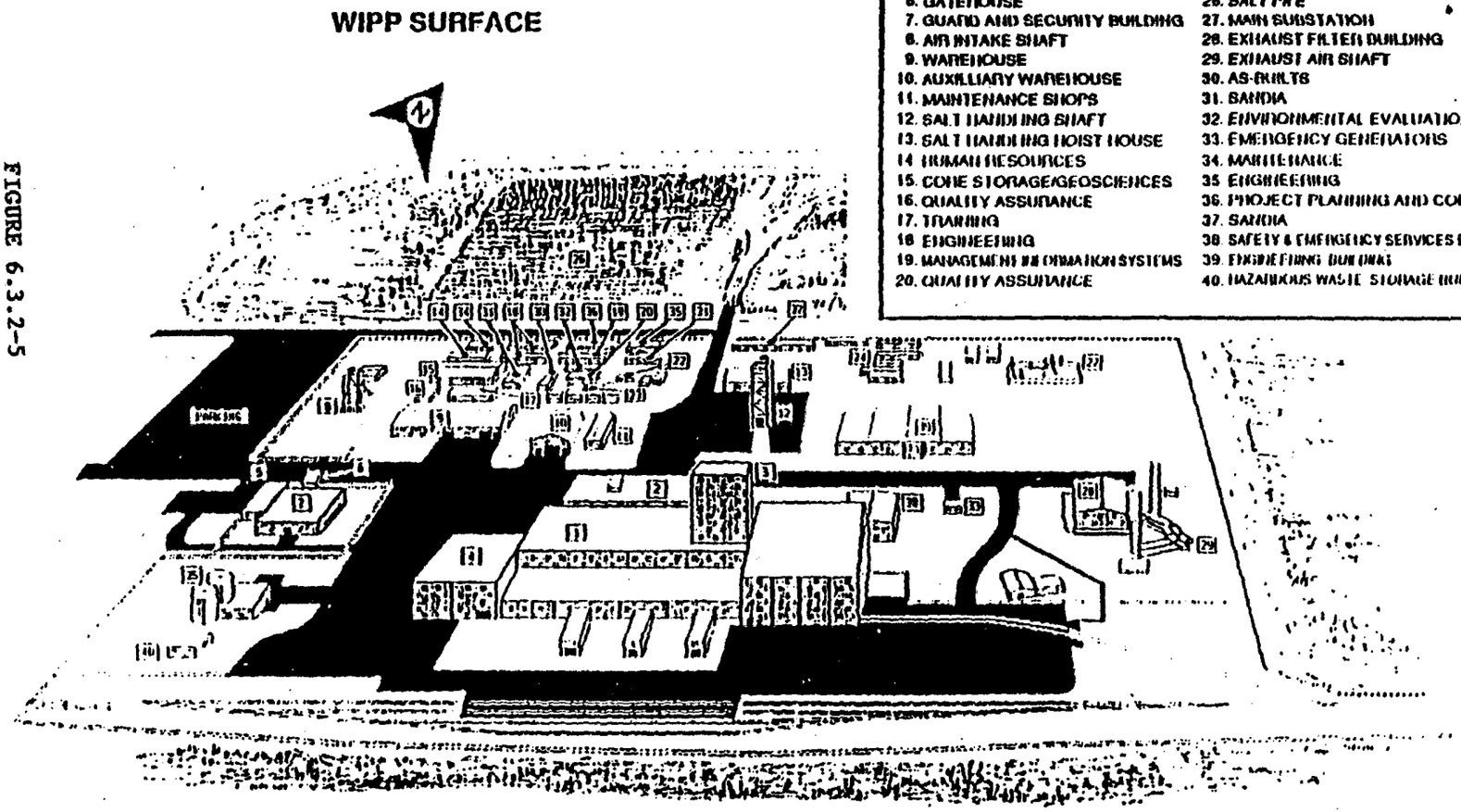

LEGEND

1. WASTE HANDLING BUILDING
2. SUPPORT BUILDING
3. WASTE HANDLING SHAFT
4. TRUPACT MAINTENANCE FACILITY
5. VEHICLE TRAP
6. GATEHOUSE
7. GUARD AND SECURITY BUILDING
8. AIR INTAKE SHAFT
9. WAREHOUSE
10. AUXILLIARY WAREHOUSE
11. MAINTENANCE SHOPS
12. SALT HANDLING SHAFT
13. SALT HANDLING HOIST HOUSE
14. HUMAN RESOURCES
15. CORE STORAGE/GEOSCIENCES
16. QUALITY ASSURANCE
17. TRAINING
18. ENGINEERING
19. MANAGEMENT INFORMATION SYSTEMS
20. QUALITY ASSURANCE
21. ENVIRONMENTAL MONITORING
22. MAINTENANCE
23. CONSTRUCTION MANAGEMENT
24. SANDIA
25. WATER STORAGE TANKS AND PUMPS
26. SALT PILE
27. MAIN SUBSTATION
28. EXHAUST FILTER BUILDING
29. EXHAUST AIR SHAFT
30. AS-BUILTS
31. SANDIA
32. ENVIRONMENTAL EVALUATION GROUP
33. EMERGENCY GENERATORS
34. MAINTENANCE
35. ENGINEERING
36. PROJECT PLANNING AND CONTROL
37. SANDIA
38. SAFETY & EMERGENCY SERVICES BLDG EOC
39. ENGINEERING BUILDING
40. HAZARDOUS WASTE STORAGE BUILDING

FIGURE 6.3.2-5
WIPP Surface Structures

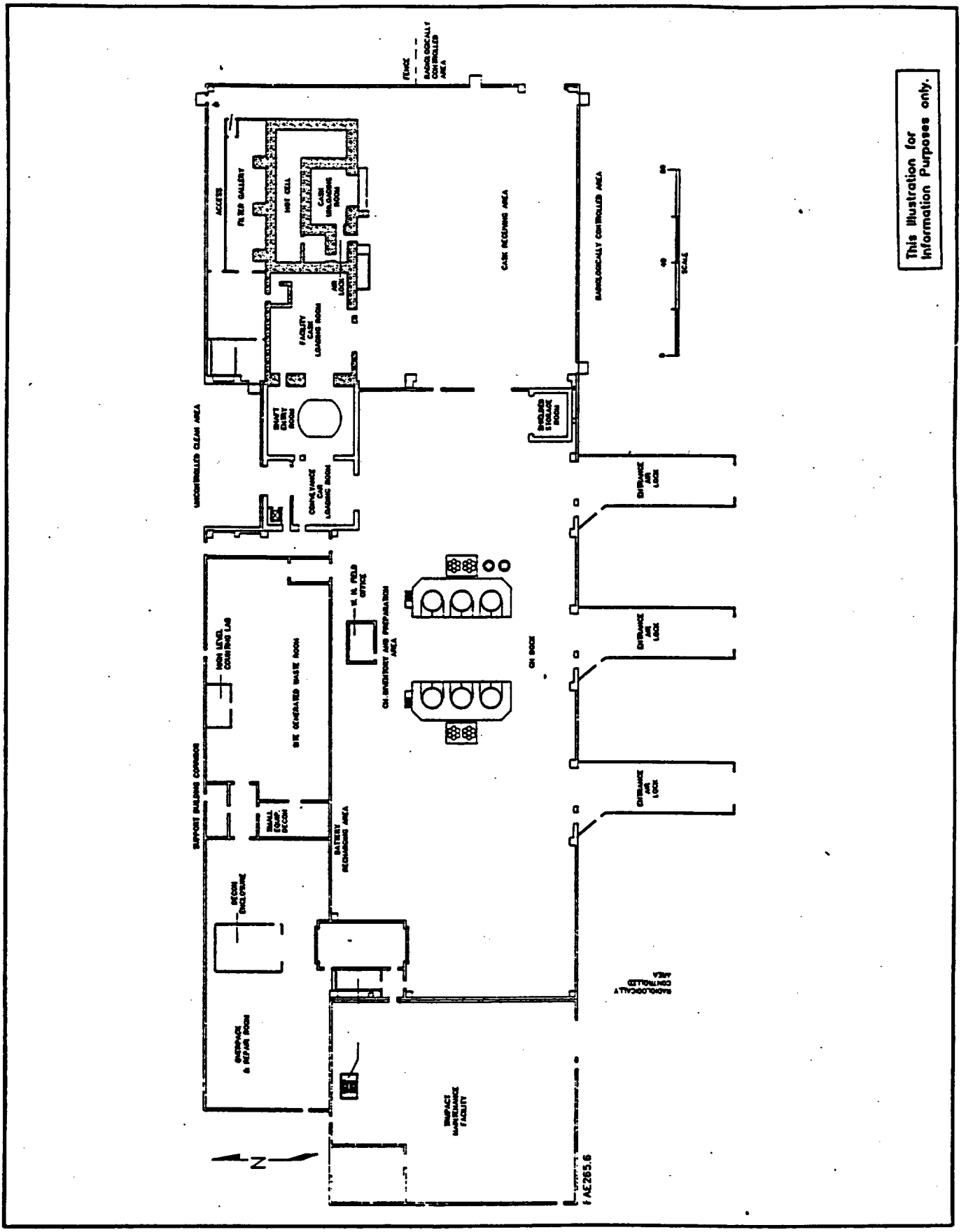

FIGURE 6.3.2-6
Waste Handling Building Plan

6.3.2 Continued

waste packages from the incoming shipping containers, to reconfigure containers into experimental containers, and to transfer the waste packages to the underground storage area via the waste shaft.

The waste shaft is located between the CH TRU and RH TRU areas in the WHB (Figure 6.3.2-6). The shaft is nominally 19 feet in diameter and is serviced by a hoist utilizing a hoist cage that is primarily used for transportation of CH TRU and RH TRU wastes 2,150 feet below ground to underground storage areas.

The storage area has four main entries (two entries for fresh air and two entries for return air) and a number of storage rooms. The layout of the shafts and entries allows mining and waste handling and experimental operations to proceed simultaneously although this is not currently anticipated.

A typical waste storage panel consists of up to seven storage rooms. Each room is 33 feet wide, 13 feet high, and 300 feet long. The storage rooms are separated by pillars of salt 100 feet wide and 300 feet long. Panel entries at each end of these storage rooms are also 33 feet wide and 13 feet high. These panel entries will also be used to store waste, except in the first 200 feet from the main entries, which are of smaller size (22 feet by 14 feet) and will be used to install the panel plugs.

Detailed descriptions of the complete waste handling facilities and operations for handling CH TRU and RH TRU wastes are found in the following WIPP documents:

-Final Safety Analysis Report, WP 02-9.

-Radioactive Mixed Waste Compliance Manual, WP 02-7.

-Draft Implementation Plan for DOE Order 5820.2A, DOE/WIPP 89-019.

6.3.3 Current and Future Plans

WIPP's immediate goal is to complete the requirements in the Secretary's Draft Decision Plan for WIPP (refer

6.3.3 Continued

to Appendix A) early as July 31, 1991, to permit the start of delivery of CH TRU waste for the Test Phase bin-scale experiments. The CH TRU waste will be shipped to WIPP from the DOE's Idaho National Engineering Laboratory (INEL) and Rocky Flats Plant (RFP) facilities.

The amount of CH TRU waste to be delivered to WIPP during the five-year Test Phase has been limited by the EPA to one per cent of the capacity of the WIPP. Congress may further limit the amount of CH TRU waste that can be received at WIPP during the Test Phase.

Proposed alcove tests at WIPP could require CH TRU waste starting about FY 1993. Also, initial emplacement of RH TRU waste will be scheduled when all needed programmatic activities are completed. Currently, no RH waste is scheduled to be emplaced during the Test Phase. The Test Phase is expected to end in FY 1997. Full operations, if initiated, are anticipated to last 25 years.

The WIPP Project Plans are ongoing and the final operational waste receipt approvals are achievable, but are heavily dependent on the actions and approvals of organizations outside of the DOE. WIPP is the most viable long-term solution for the nation's defense TRU waste problems. Should WIPP be delayed or deferred, it would severely impact the DOE's goals.

6.3.4 Implementation Requirements

The WIPP Environmental Protection Implementation Plan (EPIP), DOE/WIPP 90-050, has been prepared in accordance with DOE Order 5400.1, and is covered by the DOE EM FYP. The purpose of the EPIP is to provide management direction to ensure that the WIPP is operated and managed in a manner that will protect, maintain, and, where necessary, restore environmental quality, minimize potential threats to public health and the environment, and comply with environmental regulations and DOE policies.

Details of the implementation of the radioactive waste management operations are described in the document "Radioactive Waste Management at the Waste Isolation Pilot Plant: An Implementation Plan for DOE Order 5820.2A," DOE/WIPP 89-019. The remaining action in the WIPP Implementation Plan for DOE Order 5820.2A is:

-<u>Final Safety Analysis Report (FSAR) Addendum:</u> An addendum to cover dry bin-scale tests is in external review, and is expected to be approved in the third quarter of FY 1991.

6.4 Hazardous Waste Management

6.4.1 System and Facility Descriptions

(A) Overview

It is the policy of the WIPP to operate in compliance with applicable laws and regulations providing for the protection of the environment and to reduce to the maximum extent practicable the use of hazardous chemical substances and processes that produce hazardous wastes.

Since WIPP is not a manufacturing or processing facility, the amount of nonradioactive hazardous wastes generated on-site is very low. The nonradioactive hazardous waste basically consists of such items as industrial solvents, paints, motor oil, and other common substances that are by-products of routine operations.

The management of the hazardous waste includes the use of proper procedures, equipment, and facilities to collect and temporarily store this waste on-site to protect plant personnel and the public from exposure to hazardous chemical substances; to encourage the reduction of waste generation; and to comply with all federal and state regulations and laws concerning the management of hazardous waste.

All hazardous waste will be shipped off-site for treatment, long-term storage, or disposal utilizing the services of waste contractors that have valid EPA permits and adequate liability insurance.

(B) Facility Descriptions

Construction of the hazardous materials storage area at WIPP was completed in April 1991 to consolidate all the facilities that are used for storage of hazardous materials. The area consists of the Hazardous Materials Storage Building, the Hazardous Waste Accumulation Building, a compressed gas storage shed, a lube oil and grease storage building, and a waste oil storage and retaining system. Hazardous waste is stored for less than 90 days in the Hazardous Waste Accumulation Storage

6.4.1 Continued

Building, which is equipped with internal spill containment, separation walls for segregation of waste, a ventilation system, and a fire sprinkler/alarm system. An emergency eye wash/face wash system is located next to the accumulation building.

6.4.2 Current and Future Plans

Arrangements have been made to familiarize local response personnel with the layout of the hazardous materials storage area, the hazardous waste handled at this facility, associated hazards, places where personnel normally work, and established evacuation routes.

The hazardous waste plan, procedures, equipment, facilities, and personnel training will be updated as needed as new regulations are issued.

6.5 Schedule and Cost Summary

The WIPP Waste Management funding summary in Figure 6.5-1 is based on the following assumptions and constraints:

- Land withdrawal must be implemented to initiate receipt of waste for the WIPP Test Phase.
- The FY 1992 and FY 1993 budgets were based on the planning for the WIPP Test Phase at the time of the budget submission. If significant changes occur, updated information would need to be incorporated into project plans and budgets.
- The receipt date of first CH waste will be established after the Secretary of Energy's decision on WIPP readiness.

The WIPP Milestone Schedule Table is shown in Figure 6.5-2.

The WIPP facility readiness is in the final stages of completion with major construction complete, and operational reviews and operational preparedness nearing completion.

06-21-91

FIVE-YEAR SITE SPECIFIC PLAN
WASTE ISOLATION PILOT PLANT (WIPP)

WIPP WASTE MANAGEMENT FUNDING SUMMARY
(Dollars are in Thousands)

ACTIVITY DATA SHEET	TITLE	FY1991 FUNDING	FUNDING REQUESTS						FY1993-1997 5-YR PLAN TOTAL COSTS	ESTIMATED COMPLETION DATE
			FY1992	FY1993	FY1994	FY1995	FY1996	FY1997		
3234	Waste Storage	$163,708	$142,118	$185,000	$177,816	$215,597	$237,000	$237,066	$1,052,479	Continuing

FIGURE 6.5-1
WIPP Waste Management Funding Summary

FIVE-YEAR SITE SPECIFIC PLAN
WASTE ISOLATION PILOT PLANT (WIPP)

WIPP MILESTONE SCHEDULE

Primary Project Objectives FY 1992-FY 1997 Major Milestones	Completion Date
Complete Test Phase Prerequisites and start on-site TRU-Waste Testing	FY1991
Start Bin Tests/Continue Performance Assessment (PA) Experiments	FY1991
New Mexico Route Designation	FY1991
Complete Facility	FY1991
Complete Data Collection from Test Phase Operations	FY1996
Submit PA Document for Disposal Decision Determination	FY1996
Disposal Decision	FY1997

FIGURE 6.5-2
WIPP Milestone Schedule

6.6 Waste Management Documentation Requirements

The Department of Energy (DOE) Order 5820.2A, Radioactive Waste Management, dated 09-26-88, establishes the policies, guidelines, and minimum requirements by which the DOE manages its radioactive and mixed waste, and contaminated facilities. Attachment VI-1 to this DOE Order identifies the principal documentation requirements for waste management.

Listed below are the principal waste management documents for WIPP required by DOE Order 5820.2A.

DOE Order 5820.2A Chapter I-High-Level Waste

Public Law 96-164 includes a provision that authorizes the WIPP to conduct experiments on the emplacement of defense high-level waste in the underground salt beds. This experimental waste program at the WIPP facility has been deleted by the DOE. However, the program was considered during plan design. For design purposes, this waste form was assumed to be defense high-level waste (DHLW) solidified in borosilicate glass.

DOE Order 5820.2A Chapter II-Transuranic Waste

(A) Transuranic Waste Certification Plan

The Final Safety Analysis Report, WP 02-9, describes the operations of the WIPP facility. The TRU and TRU-mixed waste received for placement at the WIPP facility will conform with the WIPP WAC as referenced in DOE Order 5820.2A, and as described in WIPP/DOE-069, Transuranic (TRU) Waste Acceptance Criteria for the WIPP.

(B) Closure Plan and Post-Closure Plan for Interim Storage Facilities

WIPP's RCRA Part B Permit Application, DOE/WIPP 91-005, includes the Test Phase Closure Plan. This plan describes the activities planned to close WIPP at the end of the Test Phase should a decision be made not to proceed with the Operational Phase of WIPP. Also, included for information purposes is an Operational Closure Plan (Appendix I1) that describes activities for closing the WIPP following the Operational Phase, should it occur.

Current plans for Test Phase waste retrieval activities are described in the Waste Retrieval Plan,

6.6 Continued

which is included as Appendix I2 of the WIPP RCRA Part B Permit Application. As current plans change, the Waste Retrieval Plan may be revised to reflect those changes.

(C) Documentation for Buried Transuranic-Contaminated Waste Program

The TRU WAC for the WIPP, WIPP-DOE-069, establishes the requirements for waste acceptance at the WIPP.

DOE Order 5820.2A Chapter III-Low-Level Waste

All waste received at the WIPP will be previously certified as TRU waste, meeting the TRU WAC for the WIPP. All radiologically-contaminated waste generated by the WIPP will be managed and disposed of as TRU Waste, regardless of its radiological concentration. Therefore, management of low-level waste in accordance with Chapter III of DOE Order 5820.2A is not applicable to the activities of the WIPP.

DOE Order 5820.2A Chapter V-Decommissioning of Radioactively Contaminated Facilities

The WIPP Final Safety Analysis Report, WP 02-9, discusses the following Decontamination and Decommissioning (D & D) information:
Chapter 3.4 -- D & D Design Criteria
Chapter 12 -- D & D Activities

7.0 TECHNOLOGY DEVELOPMENT

WIPP does not currently have any activities that receive Technology Development funding.

8.0 COMPLIANCE WITH NEPA

8.1 National Environmental Policy Act (NEPA) Documents

Test Phase activities are covered in the Final Supplement Environmental Impact Statement (SEIS) for the WIPP. Projects and activities that are not covered in existing NEPA documents are reviewed for environmental concerns. If the proper level of NEPA documentation does not exist for a given project, a Supplement Analysis (SA), Environmental Assessment (EA), or request for a Categorical Exclusion (CX)

8.1 continued

determination is prepared. All NEPA documentation, reporting, evaluation, monitoring, and tracking of WIPP projects are done in accordance with the requirements contained in DOE Order 5400.1D.

8.2 Costs and Schedules

See Figure 8.2-1 for breakdown of NEPA-related costs and milestones.

9.0 REPORTING AND RECORDS MANAGEMENT

9.1 Reports

Appendix B contains a listing of FY 1991 and FY 1992 reports routinely submitted by the WIPP to federal and state regulatory agencies, as well as environmental reports required by DOE management. Also included are technical plans, analytical reports, designs, and progress reports.

9.2 Maintenance of Records

Critical project documents are maintained in a dedicated WIPP Master Records Center. Critical project drawings are maintained in a dedicated engineering file room. Both facilities are maintained in accordance with existing DOE regulations and include detailed procedures governing their operation as well as controlling changes to existing documents and drawings.

9.3 Maintenance of Samples

Sample cores from the underground mining activities are maintained and secured in dedicated facilities for future reference of underground integrity and composition. These samples will be stored indefinitely under present project planning. Other air, water, and soil samples relating to environmental monitoring are collected and are archived in a controlled dedicated room in the Safety and Emergency Services Building until analyses are complete.

10.0 QUALITY ASSURANCE

The Quality Assurance (QA) Programs for the site major project participants (WPO, SNL, and WID) are based upon the QA requirements described in the WIPP safety analysis reports. These reports (Final safety analysis Report and Safety Analysis Report for Packaging) invoke QA

06-21-91

SITE SPECIFIC PLAN
WASTE ISOLATION PILOT PLANT (WIPP)

NEPA-RELATED COSTS AND MILESTONES
(Dollars are in Thousands)

PART A - BREAKDOWN OF NEPA-RELATED COSTS

PWBS	DESCRIPTION	FY1991	FY1992	FY1993
1.2.1	Disposal Decision	$877	$230	$230
1.2.2	Permitting	$358	$492	$574
1.2.5	Environmental	$120	$0	$0
	TOTAL NEPA-RELATED COSTS	$1,355	$722	$804

PART B - NEPA-RELATED MILESTONES	COMPLETION DATE
Issue Supplement Environmental Impact Statement (SEIS I)	02/90
Complete WIPP Mitigation Action PLan	07/91
Complete NEPA Documentation for the Disposal Phase (SEIS II)	FY1996
Complete NEPA Mitigation Implementation Plans for SEIS II	FY1997

FIGURE 8.2-1
NEPA-RELATED COSTS AND SCHEDULE

10.0 Continued

standards such as ANSI/ASME NQA-1 and DOE Order AL 5700.6B. The scope of the QA programs includes site validation, experiments, performance assessment, waste transportation, facility operation and maintenance.

The QA programs are planned and executed through implementing plans, procedures, or instructions based on a graded approach. The graded approach is used to permit the selective application of QA requirements that will be applied to quality related items and activities dependent upon relative importance to safety and reliability.

11.0 FEDERAL, STATE, AND LOCAL INTERACTIONS

The DOE is committed to full and open disclosure of all information regarding the WIPP project. Special emphasis is placed upon information relative to environmental, health, safety, and QA aspects of the program. As a means to facilitate this process, the DOE and its contractors are committed to the maintenance of effective relations with the news media, state organizations, and local communities. The policy for the WIPP has been to maximize the communication of timely information on the project so that audiences get the information they desire without the need for additional public hearings.

Providing information on project activities to the public has been important and the following list highlights some of the on going major communications activities.

- Provide information at quarterly reviews with the Environmental Evaluation Group (EEG) and the state of New Mexico.

- Attend and provide information at New Mexico State Radioactive and Hazardous Materials Legislative Committee meetings. This committee examines all matters relevant to the purposes of the New Mexico Radioactive Materials Act and the New Mexico Hazardous Waste Act.

- Provide public libraries in New Mexico with appropriate documentation to establish and update the purpose and status of the WIPP project.

- Conduct official tours and technical briefings for representatives from government and industry. An aggressive schedule of tours has been maintained.

11.0 Continued

- Hold project/public interface meetings at locations throughout southeast New Mexico as the need may dictate.

- Develop outreach efforts, such as the industrial awareness seminars, which provide area businesses with information on supplying goods and services to a variety of corporations.

- Conduct media tours including interviews with the project's management personnel.

- Issue press releases and position papers on project progress in a factual, timely manner.

- Provide information to DOE/Albuquerque Operations Office, other governmental agencies and divisions within Westinghouse Electric Corporation.

- Utilize the WIPP Speakers Bureau to make presentations to civic clubs, professional organizations, elementary and secondary students and other groups to enhance public knowledge of the project.

Appendix C contains a listing of WIPP interfaces including federal, state, and local regulatory agencies. With the existing open door nature of the WIPP project, meetings, audits, or reviews with or by any of the personnel on this list could occur at any time.

WIPP will continue to work with state and local authorities to organize a coalition of emergency response teams along transportation routes for all modes of transportation.

APPENDIX A

SECRETARY OF ENERGY'S DRAFT DECISION PLAN FOR WIPP

DRAFT DECISION PLAN FOR WIPP
REV. 9 AUGUST 5, 1991

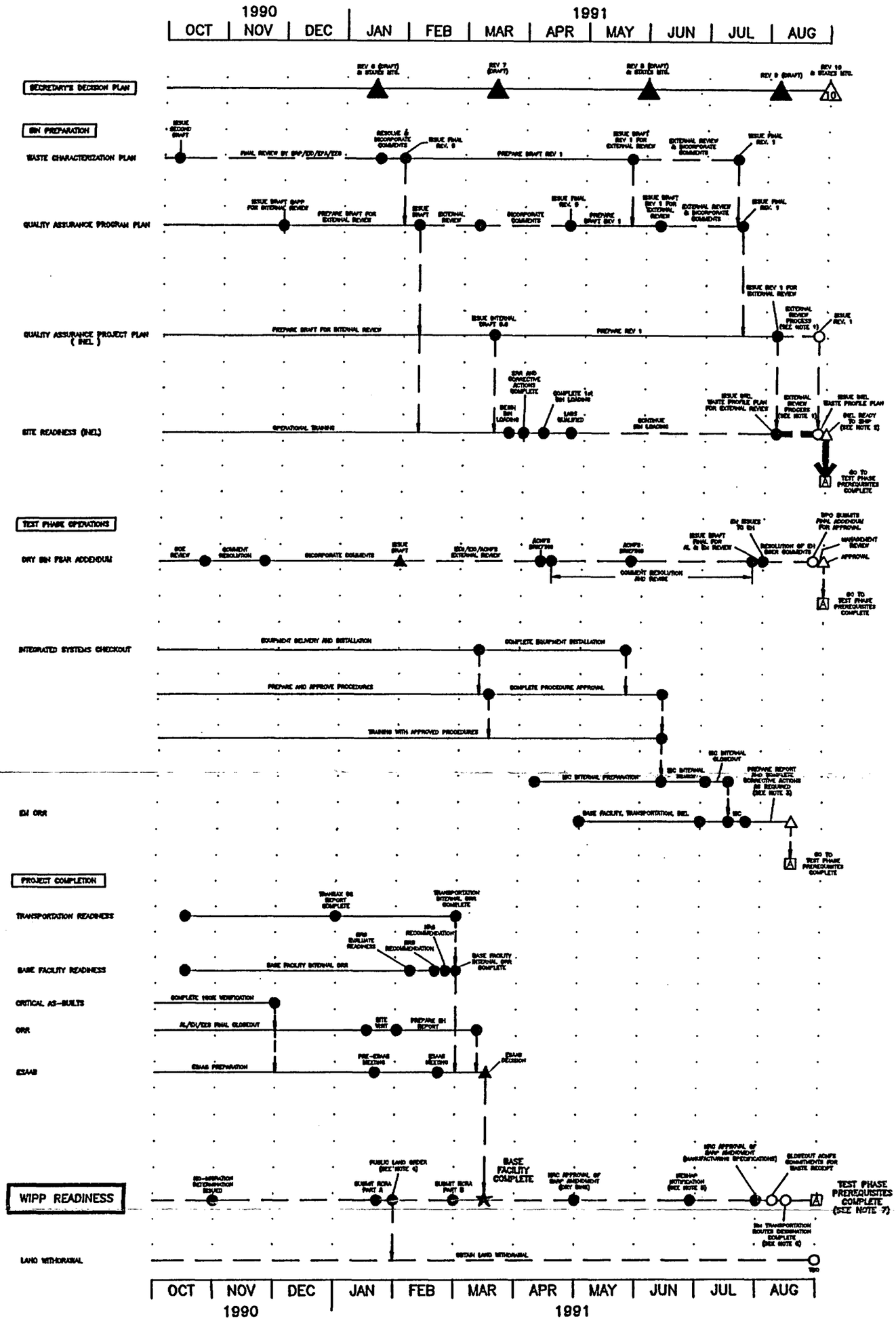

GENERAL NOTES

NOTE 1. THE EXTERNAL REVIEW PROCESS CONSISTS OF EXTERNAL REVIEW, COMMENT RESOLUTION, AND TRACOG AUDITS. IMPLEMENTATION OF THIS PROCESS WILL BE DISCUSSED WITH EIS AND THE STATE OF NEW MEXICO.

NOTE 2. NO-MIGRATION DETERMINATION REQUIREMENTS FOR INITIAL SHIPMENTS IN ACCORDANCE WITH THE BIN-SCALE TEST PLAN ADDENDUM ARE INCLUDED IN REVISION 1 OF THE WASTE CHARACTERIZATION PLAN (WCP) AND QA PLANS. SUBSEQUENT REVISIONS OF THE WCP AND QA PLANS WILL BE ISSUED TO SUPPORT REQUIREMENTS FOR MORE COMPLEX WASTE FORMS.

NOTE 3. AS PART OF THE PRE-START ESAAB IDENTIFIED BY THE BIN ORR TEAM, DOE IS DEVELOPING A PLAN, CONSISTENT WITH THE RECOMMENDATIONS OF THE WIPP EXPERT PANEL ON ROOM STABILITY, TO ENHANCE ROOM OPENING STABILITY TO ASSURE SAFE CONDUCT OF THE BIN SCALE TEST PROGRAM.

NOTE 4. DOE ADMINISTRATIVE LAND WITHDRAWAL IN JANUARY 1991 INCLUDED ISSUANCE OF A PUBLIC LAND ORDER (PLO) THAT EXTENDED THE EXISTING PLO, AND ALLOWED EMPLACEMENT OF TRU WASTE AT WIPP UPON DOE CERTIFICATION THAT ALL FEDERAL AND STATE ENVIRONMENTAL PROMULGATION REQUIREMENTS ARE MET, AND UPON DOE ISSUANCE OF A NOTICE TO PROCEED IN THE FEDERAL REGISTER. IN RESPONSE TO THE HOUSE COMMITTEE ON INTERIOR AND INSULAR AFFAIRS RESOLUTION PASSED ON MARCH 6, 1991, THE SECRETARY OF THE INTERIOR HAS PROPOSED (IN AN APRIL 1, 1991 FEDERAL REGISTER NOTICE) TO MODIFY THE JANUARY 1991 PLO TO PROHIBIT THE TRANSPORTATION OR EMPLACEMENT OF TEST WASTES WITHIN THE WIPP SITE UNTIL JUNE 30, 1991. THE SECRETARY OF THE INTERIOR HAS INFORMED ADMIRAL WATKINS THAT DOE WOULD INTEND PROHIBITION OF WASTE EMPLACEMENT AT WIPP BEYOND THE PROPOSED JUNE 30, 1991 DATE, BUT HAS NOT YET SELECTED A NEW DATE. DOE WILL CONTINUE TO SEEK LEGISLATIVE LAND WITHDRAWAL AS THE PREFERRED APPROACH.

NOTE 5. THE EPA WILL BE NOTIFIED OF THE REVISED DATE FOR START OF TEST PHASE OPERATIONS.

NOTE 6. THE NEW MEXICO HIGHWAY COMMISSION HAS SCHEDULED A MEETING ON AUGUST 14, 1991, IN ALBUQUERQUE, NM, TO DISCUSS DESIGNATION OF THE WIPP TRANSPORTATION ROUTE. IT IS NOT CLEAR WHETHER A DECISION WILL BE RENDERED AT THIS TIME. THE DECISION PLAN ASSUMES NM SELECTS A ROUTE AT THIS MEETING, AND NO 30-DAY STATE RECORD CENTER FILING PERIOD.

NOTE 7. INCLUDES DOE/EIS REVIEW COMMENTS.

SI APERTURE CARD

Also Available On Aperture Card

18-2518 8918 6

DRAFT DECISION PLAN FOR WIPP
REV. 9 AUGUST 5, 1991

COMPLETED ACTIVITIES

REV 1

STATE OF NM/EPA COMMENTS ON DECISION PLAN RECEIVED
GOVERNORS' COMMENTS ON DECISION PLAN RECEIVED
PA DRAFT PLAN ISSUED
ACNFS REPORT ISSUED
BRP REPORT ISSUED

REV 2

DRAFT PA PLAN REVIEWED
FINAL SEIS ISSUED

REV 3

EPA PROPOSED RECOMMENDATION ON NO MIGRATION VARIANCE PETITION ISSUED
ENGINEERING ALTERNATIVES PROGRAM PLAN ISSUED
NM TRANSPORTATION ROUTE HEARINGS COMPLETE
INTEGRATED SYSTEM CHECKOUT PLAN ISSUED
WASTE HOIST REPAIR COMPLETE
PA PLAN APPROVED

REV 4

STATUS REPORT ON LONG TERM ISOLATION BY THE WIPP DISPOSAL SYSTEM ISSUED
NO-MIGRATION VARIANCE PETITION PUBLIC COMMENT PERIOD COMPLETE
EMERGENCY RESPONSE PREREQUISITES COMPLETE
DRAFT WASTE CHARACTERIZATION PLAN ISSUED
SECRETARY'S DECISION ON OD NEED COMPLETE
RETRIEVABILITY PROGRAM PLAN ISSUED
RECORD OF DECISION ON SEIS ISSUED
ACNFS FSAR RESPONSE COMPLETE
FSAR APPROVED

REV 5

DOE/WESTERN STATES TRANSPORTATION AGREEMENT COMPLETE
EID REGULATORY AUTHORITY FOR RCRA APPROVED BY EPA
POTASH LEASES RESOLVED

REV 6

NO-MIGRATION DETERMINATION ISSUED
CRITICAL AS-BUILTS COMPLETE

REV 7

ADMINISTRATIVE LAND WITHDRAWAL COMPLETE
WASTE CHARACTERIZATION PLAN ISSUED
PREOPERATIONAL APPRAISAL/ORR/RRI
BASE FACILITY COMPLETE
ESAAB DECISION
RCRA PART A
RCRA PART B

REV 8

INTERNAL DRAFT QUALITY ASSURANCE PROJECT PLAN FOR INEL (REV 0)
QUALITY ASSURANCE PROGRAM PLAN (REV 0)
NRC SARP AMENDMENT APPROVED (DRY BINS)
COMPLETE 1st BIN LOADING
INITIATE EM ORR
LABS QUALIFIED

REV 9

NRC SARP AMENDMENT APPROVED (MANUFACTURING SPECIFICATIONS)
QUALITY ASSURANCE PROGRAM PLAN ISSUED (REV 1)
WASTE CHARACTERIZATION PLAN ISSUED (REV 1)
INTEGRATED SYSTEMS CHECKOUT
NESHAP NOTIFICATION

ACTIVITIES TO BE COMPLETED PRIOR TO WASTE RECEIPT

REV 10

QUALITY ASSURANCE PROJECT PLAN FOR INEL (REV 1)
CLOSEOUT ACNFS COMMITMENTS FOR WASTE RECEIPT
NM TRANSPORTATION ROUTES FINAL DESIGNATION
ISSUE WASTE PROFILE PLAN FOR INEL
INEL READY TO SHIP WASTE
FSAR ADDENDUM APPROVED
EM ORR COMPLETE

TBD

LAND WITHDRAWAL

LEGEND

★	INDICATES BASE FACILITY READINESS
[A]	INDICATES TEST PHASE PREREQUISITES COMPLETE
△	INDICATES MAJOR MILESTONE
●	INDICATES COMPLETED ACTIVITY
— —	INDICATES EXTERNAL ACTIVITY
▬ ▬	INDICATES CRITICAL PATH
△6	REV 6 (DRAFT)
△7	REV 7 (DRAFT)
△8	REV 8 (DRAFT)
△9	REV 9 (DRAFT)
△10	REV 10

ACRONYMS

ACNFS	ADVISORY COMMITTEE ON NUCLEAR FACILITY SAFETY
AL	DOE ALBUQUERQUE
BRP	BLUE RIBBON PANEL
DNFSB	DEFENSE NUCLEAR FACILITIES SAFETY BOARD
DOE	DEPARTMENT OF ENERGY
DOI	DEPARTMENT OF INTERIOR
EEG	ENVIRONMENTAL EVALUATION GROUP
EH	DOE HEADQUARTERS OFFICE OF ENVIRONMENTAL, SAFETY & HEALTH
EIB	NEW MEXICO ENVIRONMENTAL IMPROVEMENT BOARD
EID	NEW MEXICO ENVIRONMENTAL IMPROVEMENT DIVISION
EM	DOE HEADQUARTERS OFFICE OF ENVIRONMENTAL RESTORATION AND WASTE MANAGEMENT
EPA	ENVIRONMENTAL PROTECTION AGENCY
ESAAB	ENERGY SYSTEMS ACQUISITION ADVISORY BOARD
FSAR	FINAL SAFETY ANALYSIS REPORT
INEL	IDAHO NATIONAL ENGINEERING LABORATORY
ISC	INTEGRATED SYSTEMS CHECKOUT
NESHAP	NATIONAL EMISSIONS STANDARDS FOR HAZARDOUS AIR POLLUTANTS
NM	NEW MEXICO
NRB	WID NUCLEAR REVIEW BOARD
NRC	NUCLEAR REGULATORY COMMISSION
OD	OPERATIONS DEMONSTRATION
ONS	DOE HEADQUARTERS OFFICE OF NUCLEAR SAFETY
ORR	OPERATIONAL READINESS REVIEW
PA	PLAN FOR WIPP TEST PHASE
PLO	PUBLIC LAND ORDER
QA	QUALITY ASSURANCE
QAPP	QUALITY ASSURANCE PROGRAM PLAN
RCRA	RESOURCE CONSERVATION RECOVERY ACT
RRB	WID READINESS REVIEW BOARD
RRI	READINESS REVIEW INSPECTION
SARP	SAFETY ANALYSIS REPORT FOR PACKAGING
SEIS	SUPPLEMENTAL ENVIRONMENTAL IMPACT STATEMENT
SSER	SUPPLEMENTAL SAFETY EVALUATION REPORT
SRR	SITE READINESS REVIEW
TBD	TO BE DETERMINED
TRANSAX 90	TRANSPORTATION ACCIDENT 1990
TRU	TRANSURANIC
WACCC	WASTE ACCEPTANCE CRITERIA CERTIFICATION COMMITTEE
WCP	WASTE CHARACTERIZATION PLAN
WID	WESTINGHOUSE WASTE ISOLATION DIVISION
WIPP	WASTE ISOLATION PILOT PLANT
WPO	DOE WIPP PROJECT OFFICE

SI APERTURE CARD
Also Available On Aperture Card

2-1-93 9 1 9 2 8 1 0 3

APPENDIX B

LISTING OF FY 1991 AND FY 1992 WIPP REPORTS

APPENDIX B

Number	Title	Latest Revision Date
	WIPP Reports	
DOE WIPP 89-019	Implementation Plan for DOE Order 5820.2A	05/90
DOE-WIPP 89-025	Waste Characterization Program Plan for WIPP Experimental Waste	02/91
DOE-WIPP 89-026	Evaluation of the Station A Effluent Monitoring System in the Underground Exhaust System at WIPP	10/90
DOE-WIPP 89-027	Evaluation of the Station B Effluent Monitoring System in the Underground Exhaust System at WIPP	10/90
DOE-WIPP 89-028	Evaluation of the Station C Effluent Monitoring System in the Underground Exhaust System at WIPP	10/90
DOE-WIPP 90-001	Environmental Protection Implementation Plan	06/90
DOE-WIPP 90-002	WIPP Dry Bin-Scale Integrated Systems Checkout Plan	09/90
DOE-WIPP 90-003	WIPP Site Environmental Report for Calendar Year 1989	10/90
DOE-WIPP 90-004	Waste Acceptance Criteria Certification Committee Management Program	10/90
DOE-WIPP 90-005	Project Transition Plan	05/90
DOE-WIPP 90-006	Geotechnical Field Data Analysis Report for July 1988 to June 1989	01/91
DOE-WIPP 90-007	Waste Handling Hoist Bearing Damage of July 18, 1989 -- Investigation Report	03/90

APPENDIX B CONTINUED

Number	Title	Latest Revision Date
	WIPP Reports	
DOE-WIPP 90-008	WIPP Groundwater Protection Management Program	05/90
DOE-WIPP 90-009	Recommended Initial Waste Forms for the WIPP Experimental Test Program	05/90
DOE-WIPP 90-017	Feasibility of Implementing Engineered Alternatives for the WIPP	09/90
DOE-WIPP 90-018	Analysis of the Effectiveness of Engineered Alternatives for the WIPP	09/90
DOE-WIPP 90-050	Environmental Protection Plan for WIPP -- 11/90 to 11/91	12/90
DOE-WIPP 90-051	Geologic Mapping of the Air Intake Shaft at WIPP	02/91
DOE-WIPP 90-058	Recommended Strategy for the RH Transuranic Waste Program	01/91
DOE-WIPP 90-061	TRUPACT II User Readiness Check List	02/91
DOE-WIPP 91-005	RCRA Part B Permit Application for WIPP	02/91
DOE-WIPP 91-007	Evaluation of the Effectiveness and Feasibility of the WIPP Engineered Alternatives: Final Report	05/91
DOE-WIPP 91-012	Geotechnical Field Data & Analysis Report for 7/89 to 6/90	04/91
DOE-WIPP 91-014	Packaging Technical Review Board Charter	03/91
DOE-WIPP 91-015	WIPP Management Plan	03/91
DOE-WIPP 91-016	Performance Demonstration Program for the WIPP Experimental Waste Characterization Program	02/91

APPENDIX B CONTINUED

Number	Title	Latest Revision Date
	WIPP Reports	
DOE-WIPP 91-017	Geotechnical Effects of Alcove Excavation on Panel One	03/91
DOE-WIPP 91-018	Position Paper on Flammability Concern	04/91

Other Documents

Mitigation Action Plant for WIPP Supplement Environmental Impact Statement	05/91
Project Manager's Progress Report	Monthly to 03/91

APPENDIX C

LISTING OF WIPP INTERFACES

STATE GOVERNORS

Governor Guy Hunt
Alabama State House
11 S. Union Street, Room 217
Montgomery, AL 36130
(205)242-7100

Governor Fife Symington
Capitol Building, West Wing
Phoenix, AZ 85007
(602) 542-4331

Governor Bill Clinton
State Capitol
Little Rock, AR 72201
(501)682-2345

Governor George Deukmejian
State Capitol Building
Sacramento, CA 95814
(916)445-2841

Governor Roy R. Romer
136 State Capitol
Denver, CO 80203
(303)866-2471

Governor Zell Miller
203 State Capitol
Atlanta, GA 30334
(404)656-1776

Governor Cecil D. Andrus
State House
Boise, ID 83720
(208)334-2100

Governor Jim Edgar
State Capitol Building
Room 207
Springfield, IL 62706
(217)782-6830

Governor Evan Bayh
206 State House
Indianapolis, IN 46204
(317)232-4567

Governor Buddy Roemer
P.O. Box 94004
Baton Rouge, LA 70804
(504)342-7015

Governor Ray Mabus
P.O. Box 139
Jackson, MS 39205
(601)359-3100

Governor John Ashcroft
P.O. Box 720
Jefferson City, MO 65102
(314)751-3222

Governor Bob Miller
Executive Chambers, Capitol Building
Carson City, NV 89710
(702)885-5670

Governor Bruce King
Office of the Governor
State of New Mexico
Santa Fe, NM 87503
(505)827-3000

Governor Richard F. Celeste
State House
Columbus, OH 43266
(614)466-3555

Governor David Walters
State Capitol Building, Room 212
Oklahoma City, OK 73105
(405)521-2342

Governor Neil Goldschmidt
State Capitol, Room 254
Salem, OR 97310
(503)378-3111

Governor Carroll A. Campbell, Jr.
P.O. Box 11369
The State House
Columbia, SC 29211
(803)734-9818

Governor Ned McWherter
State Capitol
Nashville, TN 37243
(615)741-2001

Governor Ann Richards
State Capitol
P.O. Box 12428
Austin, TX 78711
(512)463-2000

STATE GOVERNORS (cont'd)

Governor Norman H. Bangerter
210 State Capitol
Salt Lake City, UT 84114
(801)538-1000

Governor Booth Gardner
Office of the Governor
Olympia, WA 98504
(206)753-6780

Governor Michael J. Sullivan
State Capitol Building
Cheyenne, WY 82002
(307)777-7434

STATE OFFICIALS

John Lutton, Director
Program Mgr. Emergency Response
Arizona Radiation Agency
4814 South 40th Street
Phoenix, AZ 85040
(602)255-4845

Greta J. Dicus, Director
Arkansas Department of Health
Division of Radiation Control and Emergency
Management Programs
4815 West Markham Street
Little Rock, AR 72201
(501)661-2136

Tim Holeman, Acting Director
Governor's Office of Policy and Research
136 State Capitol
Denver, CO 80203
(303)866-2575

State of Colorado
Department of Local Affairs
Colorado Division of Planning
518 State Centennial Building
1313 Sherman Street
Denver, CO 80203
(303)866-2771

James C. Hardeman, Jr., Coordinator
Georgia Department of Natural Resources
Environmental Protection Division
Floyd Tower East 1166
205 Butter Street, SE
Atlanta, GA 30334
(404)656-6905

James H. Wilbanks
Georgia Emergency Management Agency
Georgia Department of Defense
P.O. Box 18055
Atlanta, GA 30334
(404)624-7015

Robert J. Cline, Director
Office of Investigations
Indiana Department of Environmental
Management
105 South Meridian
Indianapolis, IN 46204
(317)232-8127

James E. Maher, Director
Mississippi Emergency Management Agency
P.O. Box 4501, Fondren Station
Jackson, MS 39216
(601)352-9100

Ron Forsythe
Nuclear Waste Program Manager
Mississippi Department of Energy
and Transportation
510 George Street, Suite 101
Jackson, MS 39202
(601)359-1000

Eddie S. Fuente, Director
Division of Radiological Health
Mississippi Department of Health
3150 Lawson Street
P.O. Box 1700
Jackson, MS 39215
(601)354-6657

Kenneth V. Miller, Chief
Bureau of Radiological Health
Missouri Department of Health
1730 East Elm
P.O. Box 570
Jefferson City, MO 65102
(314)751-6083

Robert Lenx
Nevada Agency for Nuclear Projects
1802 N. Carson Street, Suite 252
Carson City, NV 89710
(702)687-3744

Bob Owen
Radiological Health Program Administrator
Bureau of Environmental Health
Ohio Department of Health
P.O. Box 118
Columbus, OH 43226
(614)644-2727

Bill Kemp, Chief
Radiation and Special Hazards Service
Oklahoma Department of Health
1000 N. E. Tenth Street
P.O. Box 53551
Oklahoma City, OK 73152
(405)271-5221

Dave Stewart-Smith
Oregon Department of Energy
625 Marion Street, NE
Salem, OR 97310
(503)378-4129

Heyward G. Shealy, Chief
Bureau of Radiological Health
South Carolina Department of Health
and Environmental Control
2600 Bull Street
Columbia, SC 29201
(803)734-4700

Michael H. Mobley, Director
Division of Radiological Health
Department of Health and Environment
T.E.R.R.A. Building
150 9th Avenue, N
Nashville, TN 37219
(615)741-7812

Larry Anderson
Utah Department of Health
Bureau of Radiation Control
State Environmental Quality
288 N. 1460 W.
P.O. Box 16690
Salt Lake City, UT 84114
(801)538-6734

Rick Moore (Consultant to the State)
502 East 24th Street
Cheyenne, WY 82001
(307)634-7676

STATE OFFICIALS (cont'd)

Nancy Freudenthal
Governor's Attorney on Intergovernmental Affairs
502 East 24th Street
Cheyenne, WY 82001
(307)777-7437

Secretary
New Mexico Environment Department
1190 St. Francis Drive
P.O. Box 26110
Santa Fe, NM 87503
(505)827-2835

Anita Lockwood, Chairman
Radioactive Waste Consultation Task Force
2040 S. Pacheco
Santa Fe, NM 87505
(505)827-7836

STATE LEGISLATORS

Emerson Smock (PSA Rep.)
State Representative - District 16
3917 Mountain View
Boise, ID 83704
(208)375-0568

Senator Jane Cease (PSA Rep.)
5217 State Capitol
Salem, OR 97310
(503)378-8073

Honorable Robert S. Light
New Mexico House of Representatives
P.O. Box 1658
Carlsbad, NM 88221
(505)885-8263

Honorable Joe M. Stell
New Mexico House of Representatives
2911 Mountain View Dr.
Carlsbad, NM 88220
(505)885-8647

Honorable Louis M. Whitlock, Chairman
Radioactive and Hazardous Materials Committee
1202 N. Shore Dr.
Carlsbad, NM 88220
(505)885-3427

STATE LEGISLATORS (cont'd)

Honorable Clifford R. Tice
New Mexico Senate
2621 W. Missouri Street
Artesia, NM 88210
(505)746-6076

ENVIRONMENTAL EVALUATION GROUP

Robert H. Neill, Director
New Mexico Environemental Evaluation Group
7007 Wyoming Blvd., NE
Suite F-2
Albuquerque, NM 87109
(505)828-1003

MEMBERS OF CONGRESS

Honorable Jeff Bingaman
United States Senate
524 Hart
Senate Office Building
Washington, DC 20510
(202)224-5521

Honorable P. V. Domenici
United States Senate
434 Dirksen Sentate Office Building
Washington, DC 20510
(202)224-6621

Honorable Steve Schiff
House of Representatives
1520 Longworth House Office Building
Washington, DC 20515
(202)225-6316

Honorable William Richardson
House of Representatives
332 Cannon House Office Building
Washington, DC 20515
(202)225-6190

Honorable Joe Skeen
House of Representatives
1007 Longworth House Office Building
Washington, DC 20515
(202)225-2365

DEFENSE NUCLEAR FACILITIES SAFETY BOARD

John T. Conway, Chairman
625 Indiana Avenue, NW, Suite 700
Washington, DC 20004
(202) 208-6451

A. J. Eggenbeger, Vice Chairman
625 Indiana Avenue, NW, Suite 700
Washington, DC 20004
(202) 208-6451

Edson G. Case
625 Indiana Avenue, NW, Suite 700
Washington, DC 20004
(202) 208-6451

John W. Crawford
625 Indiana Avenue, NW, Suite 700
Washington, DC 20004
(202) 208-6451

Herbert John Cecil Kouts
625 Indiana Avenue, NW, Suite 700
Washington, DC 20004
(202) 208-6451

ADVISORY COMMITTEE ON NUCLEAR FACILITY SAFETY

Dr. John F. Ahearne, Chairman
Vice President
Resources for the Future
Washington, DC

Mr. J. Phillip Bayne
President
New York Power Authority
White Plains, NY

Dr. Richard Denning
Senior Research Leader for Nuclear Safety
Battelle Memorial Institute
Columbus, OH

Professor William E. Kastenberg
University of California
School of Engineering and Applied Science
Los Angeles, CA

Professor Harold Lewis
Professor of Physics
Physics Department
University of California
Santa Barbara, CA

Professor James E. Martin
University of Michigan
1518 School of Public Health #1
109 Observatory Drive
Department Environmental & Industrial Health
Ann Arbor, MI 48109-2029 (313) 764-1382

Dr. Mihran J. Ohanian
Associate Dean for Research
University of Florida
College of Engineering
Office of Engineering Research
310 Weil Hall
Gainesville, FL 32611 (904) 392-0946

Mr. Paul D. Rice
Paul Rice Associates
3583 Oakmont Ct.
Martinez, GA 30907 (404) 855-8080

Dr. Elmer G. Schwartz
Associate Dean
College of Engineering
University of South Carolina
Columbia, SC 29208 (803) 777-4177

Dr. Robert Seale
Professor and Department Head
Department, Nuclear Engineering
University of Arizona
Tucson, AZ 85721 (602) 621-2311

Dr. Gerald Tape, Consultant
Associated Universities Incorporated
1400 Sixteenth Street, NW, Suite 730
Washington, DC 20036 (202) 462-1676

Dr. Dana Powers
Sandia National Laboratories
P.O. Box 5800
Albuquerque, NM 87185 (505) 844-4392

Ms. Victoria Tschinkle
Senior Consultant
Landers and Parsons
P.O. Box 271
Tallahassee, FL 32302 (904) 681-0311

Mr. Wallace R. Kornack, Executive Director
U.S. Department of Energy
Washington, DC 20585
(202) 586-4400

INDIAN GOVERNMENTS

Absentee Shawnee Executive Committee
John Edwards, Governor
P.O. Box 1747
Shawnee, OK 74801
(405) 275-4030

Acoma Pueblo
Reginald Pasqual, Governor
P.O. Box 309
Acomita, NM 87034
(505) 552-6604

Caddo Tribal Council
Leonard Williams, Chairman
P.O. Box 487
Buger, OK 73009
(405) 656-2344

Cherokee Nation of Oklahoma
Wilma Mankiller, Principal Chief
P.O. Box 948
Tahlequah, OK 74465
(918) 456-0671

Cheyenne-Arapaho Tribes of Oklahoma
Juanita L. Learned, Chairperson
Cheyenne-Arapaho Business Committee
P.O. Box 38
Cocho, OK 73022
(405) 262-0345

The Shoshone-Bannock Tribes
Kesley Edmo, Chairman
Fort Hall Business Council
P.O. Box 306
Fort Hall, ID 83203
(208) 238-3902

Fort Mojave Indian Tribe
Nora Garcia, Chairperson
500 Merriman Avenue
Needles, CA 92363
(619) 326-4591

Kickapoo of Oklahoma Business Committee
Ricado Salazar, Chairman
P.O. Box 70
McLoud, OK 74851
(405) 964-5856

Laguna Pueblo
Harry Early, Governor
P.O. Box 1047
Laguna, NM 87026
(505) 552-6654

Las Vegas Tribal Council
Alfreda Mitre, Chairperson
No. 1 Paiute Drive
Las Vegas, NV 89106
(702) 386-3926

Muscogee Nation
Claude A. Cox, Principal Chief
P.O. Box 580
Okmulgee, OK 74447
(918) 756-8700

Navajo Nation
Peterson Zah, President
Navajo Tribal Council
P.O. Box 308
Window Rock, AZ 86515
(602) 871-4941

Ottawa Tribe of Oklahoma
Charles Dawes, Chief
P.O. Box 110
Miami, OK 74355
(918) 540-1536

Peoria Indian Tribe of Oklahoma
Don Giles, Chief
P.O. Box 1527
Miami, OK 74355
(918) 540-2535

Pojoaque Pueblo
Jacob Viarrial, Governor
Route 11, Box 71
Santa Fe, NM 87501
(505) 455-2278

Quapaw Tribal Business Committee
J. R. Mathews, Chairman
P.O. Box 765
Quapaw, OK 74363
(918) 542-1853

Sac & Fox Nation Business Committee
Elmer Manatowa, Jr.
Principal Chief
Route 2, Box 246
Stroud, OK 66529
(918) 968-3526

San Felipe Pueblo
Frank Tenorio, Governor
P.O. Box A
San Felipe Pueblo, NM 87001
(505) 867-3381

San Ildefonso Pueblo
Dennis P. Martinez, Governor
Route 5, Box 315-A
Santa Fe, NM 87501
(505) 455-2273

Sandia Pueblo
Ruben Baca, Governor
P.O. Box 6008
Bernalillo, NM 87004
(505) 867-3317

Santa Ana Pueblo
Lawrence Montoya, Governor
Star Route Box 37
Bernalillo, NM 87004
(505) 867-3301

Santo Domingo Pueblo
Ramon Garcia, Governor
P.O. Box 99
Santo Domingo Pueblo, NM 87052
(505) 465-2214

Seminole Nation of Oklahoma
Jerry Haney, Principal Chief
P.O. Box 1498
Wewoka, OK 74884
(405) 257-6287

Tesuque Pueblo
J. Marvin Herrera, Governor
Route 11, Box 1
Santa Fe, NM 87501
(505) 983-2667

Confederated Tribes of the Umatilla
Indian Reservation
Elwood H. Patawa, Chairman
Umatilla Board of Trustees
P.O. Box 638
Pendleton, OR 97801
(502) 276-3165

INDIAN GOVERNMENTS (cont'd)

Gary McAdams, President
Wichita Tribal Executive Committee
P.O. Box 729
Anadarko, OK 73005
(405) 247-2425

*Isleta Pueblo
Alex Lucero, Governor
P.O. Box 317
Isleta Pueblo, NM 87022
(505) 869-3111/6333

*Isleta Pueblo is affected only if Interstate 25 through New Mexico is used in the absence of a state-designated route.

Affected Indian Lands/Reservations identified in the WIPP Environmental Impact Statement.

Absentee-Shawnee (OK)
Acoma (NM)
Caddo (OK)
Cherokee (OK)
Cheyenne-Arapaho (OK)
Fort Hall (ID)
Fort Mohave (NV, CA)
Kickapoo (OK)
Laguna (NM)
Las Vegas (NV)
Muscogee (OK)
Navajo (AZ)
Ottawa (OK)
Peoria (OK)
Pojoaque (NM)
Quapaq (OK)
Sac and Fox (OK)
San Felipe (NM)
San Ildefonso (NM)
Sandia (NM)
Santa Ana (NM)
Santo Domingo (NM)
Seminole (OK)
Tesuque (NM)
Umatilla (OR)
Wichita (OK)

REGIONAL GROUPS

Lori E. Friel, Attorney
Western Interstate Energy Board
3333 Quebec Street
6500 Stapleton Plaza
Denver, CO 80207
(303)377-9459

J. Michael Martinez
Assistant Director, Policy Analysis
Southern States Energy Board
3091 Governors' Lakes Drive, Suite 400
Norcross, GA 30071
(404)242-7712

James Hena, Chairman
All Indian Pueblo Council
P.O. Box 6507
Albuquerque, NM 87107
(202)247-0371

REGIONAL GROUPS (cont'd)

Gay Kingman
Executive Director
National Congress of American Indians
804 D Street, NE
Washington, DC 20002
(202)546-9404

Ron Ross
Western Governors' Association
600 17th Street
Suite 1705 South Tower
Denver, CO 80202-5442
(303)623-9378

CITIZEN GROUPS

Janet Greenwald
Citizens for Alternatives to
Radioactive Dumping
23 Tome Hill Drive
Los Lunas, NM 87031
(505)865-6270

Don Hancock
Southwest Research and Information Center
105 Standford, SE
Albuquerque, NM 87106
(505)262-1862

Mr. Joe Goldberg
Committee to Make WIPP Safe
P.O. Box 40437
Albuquerque, NM 87196
(505)277-4204

Dr. Roger Anderson
Professor of Geology
University of New Mexico
Albuquerque, NM 87131
(505)277-4204

Edith Pierpont
League of Women Voters
Rt. 9, Box 72-4
Santa Fe, NM 87505
(505)982-9766

Richard Miller
Concerned Citizens for Nuclear Safety
418 Cerrillos Road, Suite 28
Santa Fe, NM 87501
(505)986-1973

CITIZEN GROUPS, (cont'd)

Melinda Kassen
Environmental Defense Fund
1405 Arapaho Avenue
Boulder, CO 80302
(303)440-4901

Rex Allender, Executive Director
Americans for Rational Energy Alternatives
110 Second Street, Suite 410
Sunshine Building
Albuquerque, NM 87103
(505)242-0320

LOCAL GOVERNMENTS

Bob Forrest, Mayor
City of Carlsbad
P.O. Box 1569
Carlsbad, NM 88221
(505)885-3798

Chuck Bernhard, Executive Director
Carlsbad Department of Development
P.O. Box 1090
Carlsbad, NM 88221-1689
(505)887-6562

Jay Mobley, Chairman
Eddy County Commission
P.O. Box 1139
Carlsbad, NM 88221-1139
(505)887-9511

Dr. Douglas Burgham, Provost
New Mexico State University at Carlsbad
1500 University Drive
Carlsbad, NM 88220
(505)887-5900

Bill Brainerd, Mayor
City of Roswell
P.O. Box 1838
Roswell, NM 88201
(505)624-6700

Robert M. Gallagher, City Manager
City of Hobbs
300 North Turner
Hobbs, NM 88240
(505)397-3636

LOCAL GOVERNMENTS (cont'd)

Ernest Thompson, Mayor
City of Artesia
P.O. Box 1309
Artesia, NM 88210
(505)746-4612

Sam Pick, Mayor
City of Santa Fe
P.O. Box 909
Santa Fe, NM 98604-909
(505)984-6590

FEDERAL AGENCIES

Robert E. Layton
Adminstrator, EPA Region 6
1445 Ross Avenue
Dallas, TX 75202-2733
(214)655-6444

Cy Jameson
Director, Bureau of Land Management
Department of the Interior
18th and C Streets, NW
Washington, DC 20240
(202)343-3801

Mr. Fancis Cherry, District Manager
Roswell District, BLM
P.O. Box 1397
Roswell, NM 88202-1397
(505)622-9042

Robert E. Browning, Director
Division of High-Level Waste Management
U.S. Nuclear Regulatory Commission
Mail Stop 4H3
Washington, DC 20555
(301)492-3404

Mr. Charles MacDonald, Chief
Division of Safeguards and Transportation
Transportation Licensing Branch
U.S. Nuclear Regulatory Commission
Washington, DC 20555
(301)492-3382

THE SECRETARY'S BLUE RIBBON PANEL ON WIPP

Dr. Thomas Bahr
New Mexico Water Resources Institute
New Mexico State University
P. O. Box 3167
Las Cruces, NM 88003-3167

Mr. Leonard Slosky
Slosky and Associates
Suite 1400
Bank Western Tower
1675 Broadway
Denver, CO 80202

Mr. Newal Squyres
Eberle and Berlin
P.O. Box 1368
Boise, ID 83701

Mr. Robert Bishop
Nuclear Management Resources Council
Suite 300
1776 I Street, NW
Washington, DC 20006-2496

APPENDIX D

GLOSSARY OF ACRONYMS AND ABBREVIATIONS

FIVE-YEAR SITE SPECIFIC PLAN
WASTE ISOLATION PILOT PLANT

Glossary of Acronyms and Abbreviations

ADS	Activity Data Sheet
ANSI	American National Standards Institute
ASME	American Society of Mechanical Engineers
C & C	Consultation and Cooperation
CFR	Code of Federal Regulations
CH	Contact-Handled
CH TRU	Contact-Handled Transuranic Waste
CX	Categorical Exclusion
D & D	Decontamination and Decommissioning
DHLW	Defense High-Level Waste
DOE	Department of Energy
DOE/AL	Albuquerque Operations Office
DOT	Department of Transportation
EEG	Environmental Evaluation Group
EM	Office of Environmental Restoration and Waste Management
EPA	Environmental Protection Agency
EPIP	WIPP Environmental Protection Implementation Plan
ER/WM	Environmental Restoration and Waste Management
FLPMA	Federal Land Policy and Management Act
FSAR	Final Safety Analysis Report
FYP	Five-Year Plan
GPP	General Plant Project
INEL	Idaho National Engineering Laboratory
mRem/hr	MilliRem per Hour
nCi/g	NanoCurie per Gram
NEPA	National Environmental Policy Act of 1969
NRC	Nuclear Regulatory Commission
PA	Performance Assessment
QA	Quality Assurance
RCRA	Resource Conservation and Recovery Act
R & D	Research and Development
RFP	Rocky Flats Plant
RH	Remote Handled
RH TRU	Remote Handled Transuranic Waste

Glossary of Acronyms and Abbreviations Continued

TRU	Transuranic Waste
TRUPACT	Transuranic Package Transporter
WAC	WIPP Waste Acceptance Criteria
WHB	Waste Handling Building
WID	Waste Isolation Division
WIPP	Waste Isolation Pilot Plant
WPO	WIPP Project Office