Exelon Nuclear
Limerick Generating Station
P.O. Box 2300
Pottstown, PA 19464

www.exeloncorp.com

Exelon Nuclear

T.S. 4.0.5 & 10CFR50.55a(g)

June 20, 2003

U. S. Nuclear Regulatory Commission
Attn: Document Control Desk
Washington, DC 20555

Limerick Generating Station, Unit 2
Facility Operating License No. NPF-85
NRC Docket No. 50-353

Subject: LGS Unit 2 Summary Report for Inservice Inspections (2R07)

The LGS Unit 2 Summary Report for Inservice Inspections and ASME Section XI non destructive examinations, repairs and replacements for the period April 21, 2001 to March 23, 2003 Report No. 7 is submitted in accordance with ASME Section XI, Article IWA-6200 , Unit 2 Technical Specifications Section 4.0.5 and 10CFR50.55a(g).

If you have any questions or require additional information, please do not hesitate to contact us.

Sincerely,

BAm For

William Levis
Vice President - LGS

Enclosure: Limerick Generating Station Unit 2, Summary Report for the April 21, 2001 to March 23, 2003 Periodic Inservice Inspection Report No. 7

cc: H. J. Miller, Administrator, Region I, USNRC
A. L. Burritt, LGS USNRC Senior Resident Inspector

A047

bcc: C. Pardee – KSA 3N (w/o attachments)
W. Levis – GML 5-1 (w/o attachments)
J. Benjamin - Cantara w/o attachments)
R. DeGregorio - KSA 3N (w/o attachments)
B. Hanson - GML 5-1 (w/o attachments)
M. Gallagher - KSA 2N (w/o attachments)
D. Helker - KSA 2N (w/o attachments)
K. Kemper - SSB 2-4 w/o attachments
C. Mudrick - SSB 3-1 (w/o attachments)
J. Krais - SSB 3-1 (w/o attachments)
E. Kelly - SSB 3-1 (w/o attachments)
H. Do- Cantera (w/o attachments)
D. Schmidt - SSB 3-4 (w/attachments)
M. Karasek - SSB 3-4 (w/attachments)
K. Cellars - KSA (w/o attachments)
R. Dickinson - SSB 2-3 (w/o attachments)
J. Toro - SMB 1-2 (w/attachments)
S. Gamble - SSB 2-4 (w/attachments)
P. Lenair - SSB 3-1 (w/attachments)
J. Grimes - KSA 2N(w/o attachments)
K. Fisher - JSK 4-1 (w/attachments)
J. Kramer - JSK 3-1 (w/attachments)
R. Janati - Commonwealth of PA DEP (w/attachments)
D. Dyckman - (PABRP) SSB 2-4 w/o attachments

LIMERICK GENERATING STATION

UNIT 2

SUMMARY REPORT FOR THE

APRIL 21, 2001 TO MARCH 23, 2003

PERIODIC INSERVICE INSPECTION

REPORT No. 7

TABLE OF CONTENTS

		No. of Pages
Form NIS-1	Owner's Report for Inservice Inspections	2
Introduction	Examination Period and Requirements	2
Section 1	Summary of Inservice Inspections Conducted During Limerick Generating Station, Unit 2, Cycle 7	38
Section 2	Summary of Conditions Noted During Cycle 7 Inservice Inspection Examination and Tests	3
	GE-NE-0000-0006-2250-4a, Structural Evaluation of Core Shroud Welds at Limerick Generation Station, Unit 2	78
Section 3	Summary of ASME Section XI Repairs and Replacements Performed During Cycle 7	3
Form NIS-2	Owner's Report for Repairs and Replacements	101

FORM NIS-1 OWNER'S REPORT FOR INSERVICE INSPECTIONS
As required by the Provisions of the ASME Code Rules

1. Owner Exelon Generation Company, LLC, 200 Exelon Way, Kennett Square, PA 19348
(Name and Address of Owner)

2. Plant Limerick Generating Station, P.O. Box 2300, Evergreen & Sanatoga Rds, Sanatoga, PA 19464-2300
(Name and Address of Plant)

3. Plant Unit 2 4. Owner Certificate of Authorization (if required) N/A

5. Commercial Service Date January 8, 1990 6. National Board Number for Unit 3960

7. Components Inspected

Component or Appurtenance	Manufacturer or Installer	Manufacturer or Installer Serial No.	State or Province No.	National Board No.
Nuclear Reactor				
Vessel	Chicago Bridge & Iron Co.	B-5027	B116768	3960
Class 1, 2, & 3				
Piping Systems				
& Supports	*	*	*	*

* Traceability per Form N-5 Data Report, Design Specification and Line Number.

Note: Supplemental sheets in form of lists, sketches, or drawings may be used, provided (1) size is 8½ in. x 11 in., (2) information in items 1 through 6 on this report is included on each sheet, and (3) each sheet is numbered and the number of sheets is recorded at the top of this form.

This Form (E00029) may be obtained from the ASME Order Dept., 22 Law Drive, Box 2300, Fairfield, NJ 07007-2300

FORM NIS-1 (Back)

8. Examination Dates: April 21, 2001 to March 23, 2003

9. Inspection Period Identification: 2nd 10-Year Inspection Interval, 1st Period

10. Inspection Interval Identification: January 8, 2000 to January 7, 2010

11. Applicable Edition of Section XI Reactor Vessel and Class 1, 2, and 3 Piping – 1989 Edition Addenda --
Containment – 1992 Edition Addenda 1992

12. Date/Revision of Inspection Plan: Specification NE-027, Revision 2

13. Abstract of Examinations and Tests. Include a list of examinations and tests and a statement concerning status of work required for the Inspection Plan.
See: Section 1, Summary of Inservice Inspections Conducted During Limerick Generating Station, Unit 2, Cycle 7.

14. Abstract of Results of Examination and Tests.
See: Section 2, Summary of Conditions Noted During Cycle 7 Inservice Inspection Examinations and Tests.

15. Abstract of Corrective Measures.
See: Section 3, Summary of ASME Section XI Repairs and Replacements Performed During Cycle 7.

We certify that a) the statements made in this report are correct, b) the examinations and tests meet the Inspection Plan as required by the ASME Code, Section XI, and c) corrective measures taken conform to the rules of the ASME Code, Section XI.

Certification of Authorization No. (if applicable) N/A Expiration Date N/A

Date June 20, 2003 Signed Exelon Generation Company, LLC By D. L. Schmidt
Owner

CERTIFICATE OF INSERVICE INSPECTION

I, the undersigned, holding a valid commission issued by the National Board of Boiler and Pressure Vessel Inspectors and the State or Province of Pennsylvania and employed by HSBCT of Hartford, Connecticut have inspected the components described in this Owner's Report during the period April 21, 2001 to March 23, 2003, and state that to the best of my knowledge and belief, the Owner has performed examinations and tests and taken corrective measures described in this Owner's Report in accordance with the requirements of the ASME Code, Section XI.

By signing this certificate neither the Inspector nor his employer makes any warranty, expressed or implied, concerning the examinations, tests, and corrective measures described in this Owner's Report. Furthermore, neither the inspector nor his employer shall be liable in any manner for any personal injury or property damage or a loss of any kind arising from or connected with this inspection.

Paul Lenart Jr. Commissions PA 2497 I,N,C & A
Inspector's Signature National Board, State, Province, and Endorsements

Date 20 JUNE 2003

Examination Period and Requirements

Introduction

During the period from April 21, 2001 through March 23, 2003, ASME Section XI and Augmented Inservice Inspections were performed at Limerick Generating Station Unit 2. The unit was shutdown for a scheduled refueling outage starting March 3, 2003 through March 23, 2003. The inspections performed during this period were credited towards the First Period of the Second Ten-Year Inspection Interval.

Examinations of Class 1, 2 and 3 systems, structures and components (SSC) completed during this period were performed in accordance with the requirements of ASME Section XI, 1989 Edition. For Class 1 and 2 piping welds, the alternative requirements of Electric Power Research Institute (EPRI) TR-112657, Rev. B-A, "Revised Risk Informed Inservice Inspection Evaluation Procedure," were used for component selection and examination methodology along with the evaluation and sample expansion requirements identified in ASME Code Case N-578-1, "Risk Informed Requirements for Class 1, 2, and 3 Piping, Method B." The examinations of Class MC and CC Containment SSC were performed in accordance with the requirements of ASME Section XI, 1992 Edition with the 1992 Addenda. Refer to the LGS Unit 2 ISI Program, Specification NE-027, Revision 2, for detailed requirements.

Augmented Inservice Inspections were performed in accordance with the following guidance. Refer to the LGS Unit 2 ISI Program, Specification NE-027, Revision 2, for detailed requirements.

AUG-01	USNRC Generic Letter 88-01, Intergranular Stress Corrosion Cracking
AUG-02	NUREG-0619, BWR Feedwater Nozzle and Control Rod Drive Return Line Nozzle Cracking
AUG-03	IE Bulletin No. 80-13, Cracking in Core Spray Spargers, and BWRVIP-18, BWR Core Spray Internals
AUG-04	NUREG/CR-3052, Closeout of IE Bulletin 80-07, BWR Jet Pump Assembly Failure, and BWRVIP-41, BWR Jet Pump Assembly
AUG-05	USNRC Mechanical Engineering Branch (MEB) Technical Position MEB 3-1, NUREG-0800, No Break Boundaries
AUG-07	SIL No. 455, Recommendation for Additional ISI of Alloy 182 Nozzle Weldments
AUG-09	Examination of the RPV Closure Head Lifting Lugs
AUG-10	UFSAR Table 3.2-1, Non-Q Reactor Pressure Vessel Internal Components
AUG-13	Technical Specification 3/4.7.4, Snubber Examination and Testing Program
AUG-15	SIL No. 433, Shroud Head Bolt Cracks

Examination Period and Requirements

AUG-16	SIL No. 462, Shroud Support Access Hole Cover Cracks
AUG-17	SIL No. 474, Steam Dryer Drain Channel Cracking
AUG-22	USNRC IEB Nos. 95-02 and 96-03, RHR and CS Suction Strainers
AUG-26	BWRVIP-42, BWR LPCI Coupling
AUG-27	BWRVIP-47, BWR Lower Plenum
AUG-28	BWRVIP-48, BWR Reactor Pressure Vessel ID Attachment Welds
AUG-30	BWRVIP-05, BWR Reactor Pressure Vessel Shell Welds

Section 1

Summary of Inservice Inspections Conducted
During Limerick Generating Station, Unit 2, Cycle 7
April 21, 2001 to March 23, 2003

Limerick ISI Component Inspection Results Listing

Unit 2

Interval: 2
Period: 1
Outage: 2R07

Component ID Description	Iso Number Insp. Date	Sect. XI Cat. Item	Inspection Reason(s)	Actual Exam	Code Coverage	Results	Summary Number	Procedure(s) Inspection Comments Cal Block
Li2/BA Shell Ring No. 1 Vertical Seam Weld	XI-RPV-2 3/8/2003	B-A B1.12	XI AUG	UT	100%	NRI	701300	GE-UT-704V5 STD. No. 1A
Li2/BB Shell Ring No. 1 Vertical Seam Weld	XI-RPV-2 3/8/2003	B-A B1.12	XI AUG	UT	100%	RI	701500	GE-UT-704V5 6 Recordable ind. Acceptable to IWB-3510-1. STD. No. 1A
Li2/BC Shell Ring No. 1 Vertical Seam Weld	XI-RPV-2 3/8/2003	B-A B1.12	XI AUG	UT	100%	RI	701700	GE-UT-704V5 1 Recordable ind. Acceptable to IWB-3510-1 STD. No. 1A
Li2/BD Shell Ring No. 2 Vertical Seam Weld	XI-RPV-2 3/8/2003	B-A B1.12	XI AUG	UT	100%	RI	701900	GE-UT-704V5 2 Recordable ind. Acceptable to IWB-3510-1. STD. No. 1A
Li2/AH Closure Head Dollar Plate Weld	XI-RPV-2 3/8/2003	B-A B1.21	XI	UT	100%	NRI	714600	GE-UT-300V6 Examined from 0 Deg to 120 Deg. STD. No. 3
Li2/DB Bottom Head Weld	XI-RPV-2 3/14/2003	B-A B1.22	XI	UT	91%	RI	713800	GE-UT-300V6 and GE-UT-304V3 2 Recordable ind. Acceptable to IWB-3510-1. Limited by Support Skirt Knuckle. STD. No. 1A
Li2/DC Bottom Head Weld	XI-RPV-2 3/14/2003	B-A B1.22	XI	UT	91%	RI	713900	GE-UT-300V6 and GE-UT-304V3 1 Recordable ind. Acceptable to IWB-3510-1. Limited by Support Skirt Knuckle. STD. No. 1A
Li2/DH Closure Head Weld	XI-RPV-2 3/10/2003	B-A B1.22	XI	UT	100%	RI	714800	GE-UT-300V6 and GE-UT-304V3 2 Recordable ind. Acceptable to IWB-3510-1. Supplemental MT, NRI. STD. No. 3
Li2/DJ Closure Head Weld	XI-RPV-2 3/11/2003	B-A B1.22	XI	UT	100%	RI	714900	GE-UT-300V6 and GE-UT-304V3 18 Recordable ind. Acceptable to IWB-3510-1. Fabrication Flaws. STD. No. 3
Li2/AF Shell Ring No. 5 to Flange Weld	XI-RPV-2 3/4/2003	B-A B1.30	XI	UT	100%	NRI	701100	GE-UT-306V0 Examined from sealing surface only from 0 Deg to 360 Deg. STD. No. 2

Limerick ISI Component Inspection Results Listing

Unit 2

Interval: 2
Period: 1
Outage: 2R07

Component ID Description	Iso Number Insp. Date	Sect. XI Cat. Item	Inspection Reason(s)	Actual Exam	Code Coverage	Results	Summary Number	Procedure(s) Inspection Comments Cal Block
Li2/AG	XI-RPV-2	B-A	XI	MT	88%	NRI	714500	GE-UT-306V0 and GE-MT-100V3
Closure Head to Flange Weld	3/9/2003	B1.40		UT	88%	NRI		Examined from 0 Deg to 120 Deg. Limited due to configuration. STD. No. 3
Li2/N17C-IR	XI-RPV-2	B-D	XI	UT	100%	NRI	712400	GE-UT-705V2
LPCI "A" Loop Nozzle Inside Radius Section	3/12/2003	B3.100						Z1 and Z2A LIM-2
Li2/N1B-IR	XI-RPV-2	B-D	XI	UT	100%	NRI	704300	GE-UT-705V2
Recirculation Outlet "B" Loop Nozzle Inside Radius Section	3/9/2003	B3.100						Z1 and Z2A STD. No. 1A
Li2/N2B-IR	XI-RPV-2	B-D	XI	UT	100%	NRI	704900	GE-UT-705V2
Recirculation Inlet "B" Loop Nozzle Inside Radius Section	3/12/2003	B3.100						Z1 and Z2A STD. No. 1A
Li2/N2C-IR	XI-RPV-2	B-D	XI	UT	100%	NRI	705200	GE-UT-705V2
Recirculation Inlet "B" Loop Nozzle Inside Radius Section	3/11/2003	B3.100						Z1 and Z2A STD. No. 1A
Li2/N2E-IR	XI-RPV-2	B-D	XI	UT	100%	NRI	705800	GE-UT-705V2
Recirculation Inlet "B" Loop Nozzle Inside Radius Section	3/11/2003	B3.100						Z1 and Z2A STD. No. 1A
Li2/N2F-IR	XI-RPV-2	B-D	XI	UT	100%	NRI	706100	GE-UT-705V2
Recirculation Inlet "B" Loop Nozzle Inside Radius Section	3/10/2003	B3.100						Z1 and Z2A STD. No. 1A
Li2/N2G-IR	XI-RPV-2	B-D	XI	UT	100%	NRI	706400	GE-UT-705V2
Recirculation Inlet "B" Loop Nozzle Inside Radius Section	3/11/2003	B3.100						Z1 and Z2A STD. No. 1A
Li2/N3A-IR	XI-RPV-2	B-D	XI	UT	100%	NRI	707600	GE-UT-705V2
Main Steam "A" Loop Nozzle Inside Radius Section	3/6/2003	B3.100						Z1 and Z2A STD. No. 1A

Limerick ISI Component Inspection Results Listing

Unit 2

Interval: 2
Period: 1
Outage: 2R07

Component ID Description	Iso Number Insp. Date	Sect. XI Cat. Item	Inspection Reason(s)	Actual Exam	Code Coverage	Results	Summary Number	Procedure(s) Inspection Comments Cal Block
LI2/N3B-IR Main Steam "B" Loop Nozzle Inside Radius Section	XI-RPV-2 3/7/2003	B-D B3.100	XI	UT	100%	NRI	707900	GE-UT-705V2 Z1 and Z2A STD. No. 1A
LI2/N4C-IR Feedwater "C" Loop Nozzle Inside Radius Section	XI-RPV-2 3/7/2003	B-D B3.100	XI AUG	UT	100%	NRI	709400	GE-UT-705V2 Z1, Z2A, Z2B, and Z3 STD. No. 1A
LI2/N4D-IR Feedwater "D" Loop Nozzle Inside Radius Section	XI-RPV-2 3/9/2003	B-D B3.100	XI AUG	UT	88%	NRI	709700	GE-UT-705V2 Z1, Z2A, Z2B, and Z3 Restricted scans due to N11 Nozzle pad and TC Pads STD. No. 1A
LI2/N17C LPCI "A" Loop Nozzle to Vessel Weld	XI-RPV-2 3/12/2003	B-D B3.90	XI	UT	77%	NRI	712300	GE-UT-705V2 STD. No. 1A
LI2/N1B Recirculation Outlet "B" Loop Nozzle to Vessel Weld	XI-RPV-2 3/10/2003	B-D B3.90	XI	UT	71%	RI	704200	GE-UT-705V2 6 recordable indications, Near Surface. Acceptable to IWB-3512-1 STD. No. 1A
LI2/N2B Recirculation Inlet "B" Loop Nozzle to Vessel Weld	XI-RPV-2 3/12/2003	B-D B3.90	XI	UT	77%	NRI	704800	GE-UT-705V2 STD. No. 1A
LI2/N2C Recirculation Inlet "B" Loop Nozzle to Vessel Weld	XI-RPV-2 3/11/2003	B-D B3.90	XI	UT	77%	RI	705100	GE-UT-705V2 2 recordable indications. Acceptable to IWB-3512-1 STD. No. 1A
LI2/N2E Recirculation Inlet "B" Loop Nozzle to Vessel Weld	XI-RPV-2 3/11/2003	B-D B3.90	XI	UT	77%	NRI	705700	GE-UT-705V2 STD. No. 1A
LI2/N2F Recirculation Inlet "A" Loop Nozzle to Vessel Weld	XI-RPV-2 3/10/2003	B-D B3.90	XI	UT	77%	NRI	706000	GE-UT-705V2 STD. No. 1A

Limerick ISI Component Inspection Results Listing

Unit 2

Interval: 2
Period: 1
Outage: 2R07

Component ID Description	Iso Number Insp. Date	Sect. XI Cat. Item	Inspection Reason(s)	Actual Exam	Code Coverage	Results	Summary Number	Procedure(s) Inspection Comments Cal Block
LI2/N2G	XI-RPV-2	B-D	XI	UT	77%	NRI	706300	GE-UT-705V2
Recirculation Inlet "A" Loop Nozzle to Vessel Weld	3/11/2003	B3.90						
								STD. No. 1A
LI2/N3A	XI-RPV-2	B-D	XI	UT	77%	NRI	707500	GE-UT-705V2
Main Steam "A" Loop Nozzle to Vessel Weld	3/6/2003	B3.90						
								STD. No. 1A
LI2/N3B	XI-RPV-2	B-D	XI	UT	77%	RI	707800	GE-UT-705V2
Main Steam "B" Loop Nozzle to Vessel Weld	3/7/2003	B3.90						1 recordable indication, Near Surface. Acceptable to IWB-3512-1
								STD. No. 1A
LI2/N4C	XI-RPV-2	B-D	XI	UT	77%	NRI	709300	GE-UT-705V2
Feedwater "C" Loop Nozzle to Vessel Weld	3/10/2003	B3.90						
								STD. No. 1A
LI2/N4D	XI-RPV-2	B-D	XI	UT	66%	RI	709600	GE-UT-705V2
Feedwater "D" Loop Nozzle to Vessel Weld	3/8/2003	B3.90						2 recordable indications. Acceptable to IWB-3512-1
								STD. No. 1A
LI2/RPV CLOSURE HEAD NUTS	XI-RPV-2	B-G-1	XI	UT	100%	NRI	724300	GE-UT-317V1
Nuts SN 1 - SN 76	3/7/2003	B6.10						Examined #1 - #26
								8.5-6-8-CS-22PEB
LI2/RPV CLOSURE STUDS IN PLACE	XI-RPV-2	B-G-1	XI	UT	100%	NRI	724400	GE-PDI-UT-5R2
Studs SN 1 - SN 76	3/4/2003	B6.20						#1 - #17 and #22 - #26
								CLOSURE STUD
LI2/THREADED HOLES IN RPV FLANGE	XI-RPV-2	B-G-1	XI	UT	98%	NRI	724600	GE-UT-308V2
Holes SN1 - SN 76	3/4/2003	B6.40						#1 - #26
								STD. No. 2
LI2/RPV CLOSURE WASHERS	XI-RPV-2	B-G-1	XI	VT-1	100%	NRI	724700	ER-AA-335-016R1
Washers SN 1 - SN 76	3/7/2003	B6.50						Examined #1 - #17 and #22 - 30.

Limerick ISI Component Inspection Results Listing

Unit 2

Interval: 2
Period: 1
Outage: 2R07

Component ID Description	Iso Number Insp. Date	Sect. XI Cat. Item	Inspection Reason(s)	Actual Exam	Code Coverage	Results	Summary Number	Procedure(s) Inspection Comments Cal Block
LI2/INCORE HOUSING FLANGE BOLTING	XI-BN-5	B-G-2	XI	VT-1	100%	NRI	738900	ER-AA-335-014R1
55 InCore Housing Flanges 4/FNG	3/15/2003	B7.10						Examined by Exelon 27 core locations were examined: 56-41, 56-33, 56-25, 56-17, 48-53, 48-49, 48-41, 48-33, 48-25, 48-17, 48-13, 48-09, 40-57, 40-49, 40-45, 40-41, 40-33, 40-25, 40-21, 40-17, 40-09, 32-33, 32-29, 32-25, 32-17, and 32-09.
41-2F010B (BOLTING)	XI-DLA-206-1	B-G-2	XI	VT-1	100%	NRI	104400	ER-AA-335-017R2
24" Check Valve Hinge Pin Cover Bolting	3/11/2003	B7.70						Examined by Exelon
HV-52-2F006A (BOLTING)	XI-DLA-211-1	B-G-2	XI	VT-1	100%	NRI	027500	ER-AA-335-017R2
12" Check Valve Bonnet and Bearing Cover Bolting	3/10/2003	B7.70						Examined by Exelon
LI2/CRD HOUSING FLANGE BOLTING	XI-BN-6	B-G-2	XI	VT-1	100%	NRI	739700	ER-AA-335-014R1
185 CRD Housing Flanges - 8 Cap Screws per Flange	3/15/2003	B7.80						Examined by Exelon 19 core locations: 06-35, 14-43, 18-35, 22-11, 22-15, 22-51, 26-07, 30-59, 34-03, 34-07, 34-11, 38-23, 38-59, 42-19, 42-51, 46-27, 46-51, 50-47, and 58-35.
41-2F010B (INT. SURF.)	XI-DLA-206-1	B-M-2	XI	VT-3	100%	NRI	104600	ER-AA-335-017R2
24" Check Valve Internal Surfaces	3/11/2003	B12.50						Examined by Exelon
HV-52-2F006A (INT. SURF.)	XI-DLA-211-1	B-M-2	XI	VT-3	100%	NRI	027600	ER-AA-335-017R2
12" Check Valve Internal Surfaces	3/10/2003	B12.50						Examined by Exelon
ST-4-041-950-2	ST-INDEX	B-P	XI	VT-2	100%	NRI		
ISI System Leakage Test for all Class 1 Systems and some Class 2 Systems	3/18/2003	B15.10						
2AE-205 SG-1	XI-2E-205	C-A	XI	UT	100%	NRI	365900	GE-PDI-UT-1R3
Shell (Ring #1) to Flange Weld	3/6/2003	C1.10						LIM-F-1.18-CS
2AE-205 SG-3	XI-2E-205	C-A	XI	UT	100%	NRI	361900	GE-PDI-UT-1R3
Shell Weld (Ring #3) to Shell Weld (Ring #2)	3/6/2003	C1.10						LIM-F-.812-CS & LIM-F-1.18-CS

Limerick ISI Component Inspection Results Listing

Unit 2

Interval: 2
Period: 1
Outage: 2R07

Component ID Description	Iso Number Insp. Date	Sect. XI Cat. Item	Inspection Reason(s)	Actual Exam	Code Coverage	Results	Summary Number	Procedure(s) Inspection Comments Cal Block
2AE-205 N-4-1	XI-2E-205	C-B	XI	MT	100%	NRI	366300	GE-PDI-UT-1R3 and GE-MT-100V3
Outlet Nozzle (N-4) to Shell Weld (Ring #1)	3/6/2003	C2.21		UT	100%	NRI		
								LIM-F-1.18-CS
2AE-205 N-4-1 INNER RADIUS	XI-2E-205	C-B	XI	UT	100%	NRI	366500	GE-UT-311V7
Outlet Nozzle (N-4) Inner Radius	3/6/2003	C2.22						
								LIM-F-1.18-CS
2BP-202 SWC-1 16	XI-2P-202	C-G	XI	MT	100%	NRI	367300	GE-MT-100 V3
Discharge Elbow to Flange Weld	3/13/2003	C6.10						
2BP-202 SWC-2 16	XI-2P-202	C-G	XI	MT	100%	NRI	367100	GE-MT-100 V3
Discharge Elbow to Head Flange Weld	3/13/2003	C6.10						
2BP-202 SWN-1 16	XI-2P-202	C-G	XI	MT	100%	NRI	367200	GE-MT-100 V3
Discharge Elbow to Stuffing Box Weld	3/13/2003	C6.10						
2BP-202 SWN-2 16	XI-2P-202	C-G	XI	MT	100%	NRI	367400	GE-MT-100 V3
Stuffing Box Attachment Weld	3/13/2003	C6.10						
ST-4-001-950-2	ST-INDEX	C-H	XI	VT-2	100%	NRI		
ISI Inservice Pressure Test of the Main Steam System	2/8/2002	C7.30						
ST-4-026-950-2	ST-INDEX	C-H	XI	VT-2	100%	NRI		
ISI Inservice Pressure Test of Plant Process Radiation Monitoring Piping	6/25/2002	C7.30						
ST-4-030-950-2	ST-INDEX	C-H	XI	VT-2	100%	NRI		
Pass and Containment Atmospheric Control Sample Loops Functional Pressure Test and Contaminated Piping Inspection	3/16/2003	C7.30						
ST-4-047-952-2	ST-INDEX	C-H	XI	VT-2	100%	NRI		
ISI Pressure Test of East Bank of CRD HCU'S	11/21/2002	C7.30						

Limerick ISI Component Inspection Results Listing

Unit 2

Interval: 2
Period: 1
Outage: 2R07

Component ID Description	Iso Number Insp. Date	Sect. XI Cat. Item	Inspection Reason(s)	Actual Exam	Code Coverage	Results	Summary Number	Procedure(s) Inspection Comments Cal Block
ST-4-047-953-2 ISI Pressure Test of West Bank of CRD HCU'S	ST-INDEX 11/21/2002	C-H C7.30	XI	VT-2	100%	NRI		
ST-4-048-950-2 ISI Functional Pressure Test of Standby Liquid Control Discharge Piping to Squib Valves	ST-INDEX 7/19/2001	C-H C7.30	XI	VT-2	100%	NRI		
ST-4-048-952-2 ISI Inservice Pressure Test of Standby Liquid Control Suction Piping	ST-INDEX 7/15/2002	C-H C7.30	XI	VT-2	100%	NRI		
ST-4-049-953-2 ISI Inservice Pressure Test of RCIC Exhaust Vacuum Breaker Piping	ST-INDEX 7/10/2002	C-H C7.30	XI	VT-2	100%	NRI		
ST-4-051-951-2 ISI Functional Pressure Test of RHR Loop A	ST-INDEX 7/27/2001	C-H C7.30	XI	VT-2	100%	NRI		
ST-4-051-952-2 ISI Functional Pressure Test of RHR Loop B	ST-INDEX 5/29/2002	C-H C7.30	XI	VT-2	100%	NRI		
ST-4-051-953-2 ISI Functional Pressure Test of RHR Loop C	ST-INDEX 10/12/2001	C-H C7.30	XI	VT-2	100%	NRI		
ST-4-051-954-2 ISI Functional Pressure Test of RHR Loop D	ST-INDEX 8/15/2002	C-H C7.30	XI	VT-2	100%	NRI		
ST-4-052-953-2 ISI Functional Pressure Test of Safeguard Piping Fill Loops A and B	ST-INDEX 7/19/2001	C-H C7.30	XI	VT-2	100%	NRI		
ST-4-055-951-2 ISI Inservice Pressure Test of HPCI Pump and Turbine Supply	ST-INDEX 12/19/2001	C-H C7.30	XI	VT-2	100%	NRI		
ST-4-055-954-2 ISI Inservice Pressure Test of HPCI Exhaust Vacuum Brealer Piping	ST-INDEX 9/18/2002	C-H C7.30	XI	VT-2	100%	NRI		

Limerick ISI Component Inspection Results Listing

Unit 2

Interval: 2
Period: 1
Outage: 2R07

Component ID Description	Iso Number Insp. Date	Sect. XI Cat. Item	Inspection Reason(s)	Actual Exam	Code Coverage	Results	Summary Number	Procedure(s) Inspection Comments Cal Block
ST-4-087-950-2 ISI Inservice Pressure Test of Class 2 Drywell Chilled Water System Components	ST-INDEX 6/21/2001	C-H C7.30	XI	VT-2	100%	NRI		
ST-4-057-952-2 B Post LOCA Recombiner Pneumatic Pressure Test and Contaminated Piping Inspection	ST-INDEX 3/15/2003	C-H, D-A C7.30, D1.10	XI	VT-2	100%	NRI		
ST-4-057-951-2 A Post LOCA Recombiner Pneumatic Pressure Test and Contaminated Piping Inspection	ST-INDEX 3/11/2003	C-H. D-A C7.30, D1.10	XI	VT-2	100%	NRI		
ST-4-020-951-2 ISI Functional Pressure Test of D21 Diesel Fuel Oil Transfer System	ST-INDEX 8/22/2001	D-A D1.10	XI	VT-2	100%	NRI		
ST-4-020-952-2 ISI Functional Pressure Test of D22 Diesel Fuel Oil Transfer System	ST-INDEX 11/28/2001	D-A D1.10	XI	VT-2	100%	NRI		
ST-4-020-953-2 ISI Functional Pressure Test of D23 Diesel Fuel Oil Transfer System	ST-INDEX 8/8/2001	D-A D1.10	XI	VT-2	100%	NRI		
ST-4-020-954-2 ISI Functional Pressure Test of D24 Diesel Fuel Oil Transfer System	ST-INDEX 11/13/2001	D-A D1.10	XI	VT-2	100%	NRI		
ST-4-020-961-2 D21 Diesel Fuel Oil Storage and Transfer System Buried Pipe and Storage Tank 2A-T527 Pressure Decay Test	ST-INDEX 8/23/2001	D-A D1.10	XI	VT-2	100%	NRI		

Limerick ISI Component Inspection Results Listing
Unit 2

Interval: 2
Period: 1
Outage: 2R07

Component ID Description	Iso Number Insp. Date	Sect. XI Cat. Item	Inspection Reason(s)	Actual Exam	Code Coverage	Results	Summary Number	Procedure(s) Inspection Comments Cal Block
ST-4-020-962-2 D22 Diesel Fuel Oil Storage and Transfer System Buried Pipe and Storage Tank 2BT527 Pressure Decay Test	ST-INDEX 8/26/2002	D-A D1.10	XI	VT-2	100%	NRI		
ST-4-020-963-2 D23 Diesel Fuel Oil Storage and Transfer System Buried Pipe and Storage Tank 2C-T527 Pressure Decay Test	ST-INDEX 7/10/2001	D-A D1.10	XI	VT-2	100%	NRI		
ST-4-020-964-2 D24 Diesel Fuel Oil Storage and Transfer System Buried Pipe and Storage Tank 2DT527 Pressure Decay Test	ST-INDEX 2/11/2002	D-A D1.10	XI	VT-2	100%	NRI		
ST-4-092-961-2 ISI Pressure Test of the D21 Diesel (2AG501) Fuel and Diesel Oil Storage and Transfer Systems	ST-INDEX 6/26/2002	D-A D1.10	XI	VT-2	100%	NRI		
ST-4-092-962-2 ISI Pressure Test of the D22 Diesel (2BG501) Fuel and Diesel Oil Storage and Transfer Systems	ST-INDEX 5/29/2001	D-A D1.10	XI	VT-2	100%	NRI		
ST-4-092-963-2 ISI Pressure Test of the D23 Diesel (2CG501) Fuel and Diesel Oil Storage and Transfer Systems	ST-INDEX 7/10/2002	D-A D1.10	XI	VT-2	100%	NRI		
APE-2MS HHA1 Variable Support	XI-APE-2MS-LA 3/5/2003	F-A F1.10	XI	VT-3	100%	RI	176900	ER-AA-335-016R1 and MAG-CG-407 Loose nuts evaluated on NCR LG 93-00060 as acceptable. CR 00147692
DCA-205-H007 Mechanical Snubber	XI-DCA-205-1 3/5/2003	F-A F1.10	XI AUG	VT-3	100%	NRI	332900	ER-AA-335-016R1 and MAG-CG-407
DCA-205-H008 Mechanical Snubber	XI-DCA-205-3 3/10/2003	F-A F1.10	XI AUG	VT-3	100%	NRI	336700	ER-AA-335-016R1 and MAG-CG-407

Limerick ISI Component Inspection Results Listing

Unit 2

Interval: 2
Period: 1
Outage: 2R07

Component ID Description	Iso Number Insp. Date	Sect. XI Cat. Item	Inspection Reason(s)	Actual Exam	Code Coverage	Results	Summary Number	Procedure(s) Inspection Comments Cal Block
DCA-212-E1 H1 Rigid Support	XI-DCA-212-E1 3/5/2003	F-A F1.10	XI	VT-3	100%	NRI	691800	ER-AA-335-016R1 and MAG-CG-407
DCA-212-E1 H2 Rigid Support	XI-DCA-212-E1 3/5/2003	F-A F1.10	XI	VT-3	100%	NRI	691700	ER-AA-335-016R1 and MAG-CG-407
DCA-212-E1 H3 Rigid Support	XI-DCA-212-E1 3/5/2003	F-A F1.10	XI	VT-3	100%	NRI	691600	ER-AA-335-016R1 and MAG-CG-407
DCA-213 H5 Rigid Support	XI-DCA-213-1 3/5/2003	F-A F1.10	XI	VT-3	100%	NRI	586500	ER-AA-335-016R1 and MAG-CG-407
DCA-213 H6 Rigid Support	XI-DCA-213-1 3/5/2003	F-A F1.10	XI	VT-3	100%	NRI	586600	ER-AA-335-016R1 and MAG-CG-407
DCA-420-H002 Mechanical Snubber	XI-DCA-420-1 3/7/2003	F-A F1.10	XI AUG	VT-3	100%	NRI	025200	ER-AA-335-016R1 and MAG-CG-407
DCA-420-H003 Mechanical Snubber	XI-DCA-420-1 3/7/2003	F-A F1.10	XI AUG	VT-3	100%	NRI	025000	ER-AA-335-016R1 and MAG-CG-407
DLA-205-1 FW2 Anchor: Flued Head X-9A to Penetration Sleeve	XI-DLA-205-1 3/14/2003	F-A F1.10	XI	VT-3	100%	NRI	103800	ER-AA-335-016R1 and MAG-CG-407
DLA-207-H003 Variable Support	XI-DLA-207-1 3/5/2003	F-A F1.10	XI	VT-3	100%	NRI	111600	ER-AA-335-016R1 and MAG-CG-407
DLA-207-H004 Variable Support	XI-DLA-207-1 3/5/2003	F-A F1.10	XI	VT-3	100%	NRI	112200	ER-AA-335-016R1 and MAG-CG-407
DLA-208-H003 Variable Support	XI-DLA-208-1 3/5/2003	F-A F1.10	XI	VT-3	100%	RI	118700	ER-AA-335-016R1 and MAG-CG-407 4" nail lodged in spring. Removed and re-examined by Exelon, NRI
DLA-208-H004 Variable Support	XI-DLA-208-1 3/5/2003	F-A F1.10	XI	VT-3	100%	NRI	119300	ER-AA-335-016R1 and MAG-CG-407
VRR-2RS HB1 Rigid Support	XI-VRR-2RS-2B 3/8/2003	F-A F1.10	XI	VT-3	100%	RI	656300	ER-AA-335-016R1 and MAG-CG-407 Gap between nuts and clamp. Acceptable per P-319
EBB-203 H11 Rigid Support	XI-EBB-203-1 3/7/2003	F-A F1.20	XI	VT-3	100%	NRI	222300	ER-AA-335-016R1 and MAG-CG-407
EBB-203 H12 Rigid Support	XI-EBB-203-1 3/7/2003	F-A F1.20	XI	VT-3	100%	NRI	222400	ER-AA-335-016R1 and MAG-CG-407

Limerick ISI Component Inspection Results Listing

Unit 2

Interval: 2
Period: 1
Outage: 2R07

Component ID Description	Iso Number Insp. Date	Sect. XI Cat. Item	Inspection Reason(s)	Actual Exam	Code Coverage	Results	Summary Number	Procedure(s) Inspection Comments Cal Block
EBB-203 H14 Rigid Support	XI-EBB-203-1 3/7/2003	F-A F1.20	XI	VT-3	100%	NRI	222600	ER-AA-335-016R1 and MAG-CG-407
EBB-207 H6 Variable Support	XI-EBB-207-2 3/4/2003	F-A F1.20	XI	VT-3	100%	NRI	239200	ER-AA-335-016R1 and MAG-CG-407
EBB-242 H13 Rigid Support	XI-EBB-242-1ES 3/9/2003	F-A F1.20	XI	VT-3	100%	NRI	008500	ER-AA-335-016R1 and MAG-CG-407
EBB-242 H20 Rigid Support	XI-EBB-242-1WS 3/6/2003	F-A F1.20	XI	VT-3	100%	NRI	013700	ER-AA-335-016R1 and MAG-CG-407
EBB-242 H28 Rigid Support	XI-EBB-242-1WS 3/6/2003	F-A F1.20	XI	VT-3	100%	NRI	012900	ER-AA-335-016R1 and MAG-CG-407
EBB-242-1ES M-2411 Rigid Support	XI-EBB-242-1ES 3/6/2003	F-A F1.20	XI	VT-3	100%	NRI	008900	ER-AA-335-016R1 and MAG-CG-407
EBB-242-1WS M-2413 Rigid Support	XI-EBB-242-1WS 3/6/2003	F-A F1.20	XI	VT-3	100%	NRI	014000	ER-AA-335-016R1 and MAG-CG-407
GBB-201 H2 Rigid Support	XI-GBB-201-1 8/22/2002	F-A F1.20	XI	VT-3	100%	NRI	382400	MAG-CG-407R7 Examined by Exelon
GBB-201 H4 Rigid Support	XI-GBB-201-1 8/22/2002	F-A F1.20	XI	VT-3	100%	NRI	382800	MAG-CG-407R7 Examined by Exelon
GBB-201 H5 Rigid Support	XI-GBB-201-1 8/22/2002	F-A F1.20	XI	VT-3	100%	NRI	382900	MAG-CG-407R7 Examined by Exelon
GBB-217 H1 Rigid Support	XI-GBB-217-1 8/22/2002	F-A F1.20	XI	VT-3	100%	NRI	428300	MAG-CG-407R7 Examined by Exelon
GBB-217 H2 Rigid Support	XI-GBB-217-1 8/22/2002	F-A F1.20	XI	VT-3	100%	NRI	428200	MAG-CG-407R7 Examined by Exelon
GBB-218 H901 Anchor	XI-GBB-218-2 8/29/2002	F-A F1.20	XI	VT-3	100%	NRI	439800	MAG-CG-407R7 Examined by Exelon
GBB-218-H066(A) Mechanical Snubber	XI-GBB-218-1 3/3/2003	F-A F1.20	XI AUG	VT-3	100%	NRI	435800	ER-AA-335-016R1 and MAG-CG-407 Pin out only
GBB-218-H066(B) Mechanical Snubber	XI-GBB-218-1 3/3/2003	F-A F1.20	XI AUG	VT-3	100%	NRI	436500	ER-AA-335-016R1 and MAG-CG-407 Pin out only
GBB-219 H4 Variable Support	XI-GBB-219-2 3/3/2003	F-A F1.20	XI	VT-3	100%	NRI	461800	ER-AA-335-016R1 and MAG-CG-407

Limerick ISI Component Inspection Results Listing

Unit 2

Interval: 2
Period: 1
Outage: 2R07

Component ID Description	Iso Number Insp. Date	Sect. XI Cat. Item	Inspection Reason(s)	Actual Exam	Code Coverage	Results	Summary Number	Procedure(s) Inspection Comments Cal Block
HBB-210 H1 Rigid Support	XI-HBB-210-1 8/21/2002	F-A F1.20	XI	VT-3	100%	NRI	170400	MAG-CG-407R7 Examined by Exelon
HBB-210 H2 Rigid Support	XI-HBB-210-1 8/21/2002	F-A F1.20	XI	VT-3	100%	NRI	170500	MAG-CG-407R7 Examined by Exelon
HBB-217 H5 Rigid Support	XI-HBB-217-4 8/22/2002	F-A F1.20	XI	VT-3	100%	NRI	494000	MAG-CG-407R7 Examined by Exelon
HBB-217 H6 Rigid Support	XI-HBB-217-4 8/22/2002	F-A F1.20	XI	VT-3	100%	NRI	494100	MAG-CG-407R7 Examined by Exelon
HBB-220 H23 Rigid Support	XI-HBB-220-4 8/26/2002	F-A F1.20	XI	VT-3	100%	NRI	072000	MAG-CG-407R7 Examined by Exelon
HBB-220 H24 Rigid Support	XI-HBB-220-4 8/26/2002	F-A F1.20	XI	VT-3	100%	NRI	072100	MAG-CG-407R7 Examined by Exelon
GBC-201-H082 Mechanical Snubber	GBC-201-2 3/7/2003	F-A F1.30	XI AUG	VT-3	100%	NRI	254300	ER-AA-335-016R1 Pin out only
GBC-201-H189(A) Mechanical Snubber	GBC-201-4 3/8/2003	F-A F1.30	XI AUG	VT-3	100%	NRI	259000	ER-AA-335-016R1 Pin out only
GBC-201-H189(B) Mechanical Snubber	GBC-201-4 3/8/2003	F-A F1.30	XI AUG	VT-3	100%	NRI	259300	ER-AA-335-016R1 Pin out only
GBC-216 H1 Rigid Support	GBC-216-11 3/10/2003	F-A F1.30	XI	VT-3	50%	NRI	273100	ER-AA-335-016R1 Top only. Not accessible to Under Water camera.
GBC-216 H2 Rigid Support	GBC-216-10 3/10/2003	F-A F1.30	XI	VT-3	50%	NRI	272400	ER-AA-335-016R1 Top only. Not accessible to Under Water camera.
GBC-216 H4 Rigid Support	GBC-216-6 3/10/2003	F-A F1.30	XI	VT-3	50%	NRI	278600	ER-AA-335-016R1 Top only. Not accessible to Under Water camera.
HBC-282 H901 Anchor	HBC-282-2 8/29/2002	F-A F1.30	XI	VT-3	100%	NRI	532100	MAG-CG-407R7 Examined by Exelon
20P-204 FC-1 Final Mech Conn. Base Plate Embed 1 1/4" Bolting to Building (Typical of 8)	XI-20P-204 8/21/2002	F-A F1.40	XI	VT-3	100%	NRI	131500	MAG-CG-407R7 Examined by Exelon

Limerick ISI Component Inspection Results Listing

Unit 2

Interval: 2
Period: 1
Outage: 2R07

Component ID Description	Iso Number Insp. Date	Sect. XI Cat. Item	Inspection Reason(s)	Actual Exam	Code Coverage	Results	Summary Number	Procedure(s) Inspection Comments Cal Block
20P-204 IC-1 Intermediate Mrch Conn. Main Pump to Support Arm 1 1/2" Bolting (Typical of 4)	XI-20P-204 8/21/2002	F-A F1.40	XI	VT-3	100%	NRI	130900	MAG-CG-407R7 Examined by Exelon
20P-204 IC-2 Intermediate Welded Conn. Main Pump Support Arm to Base Plate (Typical of 4)	XI-20P-204 8/21/2002	F-A F1.40	XI	VT-3	100%	NRI	131100	MAG-CG-407R7 Examined by Exelon
20P-204 IC-3 Intermediate Mech Conn. Booster Pump to Support Arm 1 3/8" Bolting (Typical of 4)	XI-20P-204 8/21/2002	F-A F1.40	XI	VT-3	100%	NRI	131200	MAG-CG-407R7 Examined by Exelon
20P-204 IC-4 Intermediate Welded Conn. Booster Pump Support Arm to Base Plate (Typical of 4)	XI-20P-204 8/21/2002	F-A F1.40	XI	VT-3	100%	NRI	131400	MAG-CG-407R7 Examined by Exelon
20P-204 IM-1 Main Pump Support Arm (Typical of 4)	XI-20P-204 8/21/2002	F-A F1.40	XI	VT-3	100%	NRI	131000	MAG-CG-407R7 Examined by Exelon
20P-204 IM-2 Booster Pump Support arm (Typical of 4)	XI-20P-204 8/21/2002	F-A F1.40	XI	VT-3	100%	NRI	131300	MAG-CG-407R7 Examined by Exelon
LI2/RPV STABILIZER (0 DEG) Stabilizer Assembly & Brackets	XI-FA-2 3/5/2003	F-A F1.40	XI	VT-3	100%	NRI	757200	ER-AA-335-016R1
LI2/RPV STABILIZER (135 DEG) Stabilizer Assembly & Brackets	XI-FA-2 3/5/2003	F-A F1.40	XI	VT-3	100%	NRI	757500	ER-AA-335-016R1
LI2/RPV STABILIZER (45 DEG) Stabilizer Assembly & Brackets	XI-FA-2 3/5/2003	F-A F1.40	XI	VT-3	100%	NRI	757300	ER-AA-335-016R1
LI2/RPV SUPPORT Support Skirt Assembly	XI-FA-1 3/11/2003	F-A F1.40	XI	VT-3	100%	RI	758000	ER-AA-335-016R1 Examined from 0 Deg to 180 Deg. Loose bolting evaluated as acceptable during PSI. See Bechtel NCR 12886

Limerick ISI Component Inspection Results Listing

Unit 2

Interval: 2
Period: 1
Outage: 2R07

Component ID Description	Iso Number Insp. Date	Sect. XI Cat. Item	Inspection Reason(s)	Actual Exam	Code Coverage	Results	Summary Number	Procedure(s) Inspection Comments Cal Block
2A1F211 Pump Suction Strainer Module	XI-HBB-217-1A 3/10/2003	N/A N/A	AUG	VT-3	50%	NRI	540100	MAG-CG-425R4 No signs of strainer clogging
2A1F214 Pump Suction Strainer Module	XI-HBB-220-1A 3/10/2003	N/A N/A	AUG	VT-3	50%	NRI	540010	MAG-CG-425R4 No signs of strainer clogging
2A2F211 Pump Suction Strainer Module	XI-HBB-217-1A 3/10/2003	N/A N/A	AUG	VT-3	50%	NRI	540110	MAG-CG-425R4 No signs of strainer clogging
2B1F211 Pump Suction Strainer Module	XI-HBB-217-2A 3/10/2003	N/A N/A	AUG	VT-3	50%	NRI	540130	MAG-CG-425R4 No signs of strainer clogging
2B1F214 Pump Suction Strainer Module	XI-HBB-220-2A 3/10/2003	N/A N/A	AUG	VT-3	50%	NRI	540050	MAG-CG-425R4 No signs of strainer clogging
2B2F211 Pump Suction Strainer Module	XI-HBB-217-2A 3/10/2003	N/A N/A	AUG	VT-3	50%	NRI	540140	MAG-CG-425R4 No signs of strainer clogging
APE-2MS-LA-37 SWA 26" Pipe to Elbow	XI-APE-2MS-LA 3/12/2003	N/A N/A	AUG	UT	100%	NRI	176400	GE-PDI-UT-1R3 LIM-26-1.013-CS
APE-2MS-LB-36 SWA 26" Pipe to Elbow	XI-APE-2MS-LB 3/12/2003	N/A N/A	AUG	UT	100%	NRI	180900	GE-PDI-UT-1R3 LIM-26-1.013-CS
DBA-207-1 FW11 4" Pipe to FE-2N016 (Bimetallic)	XI-DBA-207-1 3/12/2003	N/A N/A	AUG	UT	100%	NRI	288500	GE-PDI-UT-1R3 and GE-PDI-UT-2R3 Best effort. Examine when qualified DM procedure is available. No ANII involvement. LIM-4-.337-CS & LIM-4-.337-SS304
DBA-207-1 FW52 3" Elbow to Pipe	XI-DBA-207-1 3/13/2003	N/A N/A	AUG	UT	100%	NRI	288900	GE-PDI-UT-1R3 No ANII involvement. LIM-3-.438-CS
DBA-207-1 FW53 3" Pipe to Valve HV-49-2F007	XI-DBA-207-1 3/13/2003	N/A N/A	AUG	UT	100%	NRI	289100	GE-PDI-UT-1R3 No ANII involvement. LIM-3-.438-CS

Limerick ISI Component Inspection Results Listing
Unit 2

Interval: 2
Period: 1
Outage: 2R07

Component ID Description	Iso Number Insp. Date	Sect. XI Cat. Item	Inspection Reason(s)	Actual Exam	Code Coverage	Results	Summary Number	Procedure(s) Inspection Comments Cal Block
DBB-204-1 FW3 16" Pipe to Valve HV-41-209B	XI-DBB-204-1 3/10/2003	N/A N/A	AUG	UT	100%	RI	123600	GE-PDI-UT-1R3 1 recordable ind. Root Geometry LIM-16-1.219-CS
DCC-203-1 FW21 6" Pipe to Pipe	XI-DCB-202-1 3/11/2003	N/A N/A	AUG	UT	100%	NRI	684100	GE-PDI-UT-2R3 CB 0.55in. DS of weld centerline. LIM-06-.432-SS316
LI2/CS STRAINER MODULE Pump Suction Strainer Module	XI-HBB-220-1A 3/10/2003	N/A N/A	AUG	VT-3	100%	NRI	540220	MAG-CG-425R4 Performed in conjunction with suction strainer exams. No measurable sludge build-up in this area.
LI2/LIFTING LUG 000 DEG Lug to Closure Head Weld	XI-BH-4 3/7/2003	N/A N/A	AUG	MT	100%	NRI	725800	GE-MT-100V3
LI2/RHR STRAINER MODULE Pump Suction Strainer Module	XI-HBB-217-1A 3/10/2003	N/A N/A	AUG	VT-3	100%	NRI	540210	MAG-CG-425R4 Performed in conjunction with suction strainer exams. No measurable sludge build-up in this area.
VRR-2RD-2A N2F Safe End to Nozzle (Az.210)	XI-VRR-2RD-2A 3/9/2003	N/A N/A	AUG	UT	100%	NRI	718100	GE-UT-209V12 Insignificant and Non-relevant ind. SS#4
VRR-2RD-2A N2G Safe End to Nozzle (Az.240)	XI-VRR-2RD-2A 3/10/2003	N/A N/A	AUG	UT	100%	NRI	718400	GE-UT-209V12 Insignificant and Non-relevant ind. SS#4
VRR-2RD-2B N2B Safe End to Nozzle (Az.60)	XI-VRR-2RD-2B 3/11/2003	N/A N/A	AUG	UT	100%	NRI	716900	GE-UT-209V12 Insignificant and Non-relevant ind. SS#4
VRR-2RD-2B N2C Safe End to Nozzle (Az.90)	XI-VRR-2RD-2B 3/11/2003	N/A N/A	AUG	UT	100%	NRI	717200	GE-UT-209V12 Insignificant and Non-relevant ind. SS#4
VRR-2RD-2B N2E Safe End to Nozzle (Az.150)	XI-VRR-2RD-2B 3/11/2003	N/A N/A	AUG	UT	100%	NRI	717800	GE-UT-209V12 Insignificant and Non-relevant ind. SS#4

Limerick ISI Component Inspection Results Listing
Unit 2

Interval: 2
Period: 1
Outage: 2R07

Component ID Description	Iso Number Insp. Date	Sect. XI Cat. Item	Inspection Reason(s)	Actual Exam	Code Coverage	Results	Summary Number	Procedure(s) Inspection Comments Cal Block
DBA-212-1 FW20 4" Pipe to 24"x4" Sweepolet	XI-DBA-212-1 3/8/2003	R-A R1.11	XI	UT-E	100%	RI	657100	GE-PDI-UT-1R3 2 recordable ind. ID Geometry LIM-4-.337-CS
DCA-212-E2 W15 2" Elbow to Pipe	XI-DCA-212-E2 3/18/2003	R-A R1.11	XI	VT-2	100%	NRI	693300	ER-AA-335-015R2 Examined by Exelon during System Pressure Test, No Leakage
DCA-277-E1 W3 2" Pipe to Valve 43-2F051A	XI-DCA-277-E1 3/18/2003	R-A R1.11	XI	VT-2	100%	NRI	610300	ER-AA-335-015R2 Examined by Exelon during System Pressure Test, No Leakage
DCA-418-3 FW1 12" Pipe to Safe End (Az.225 Deg.)	XI-DCA-418-3 3/11/2003	R-A R1.11	XI	UT-E	100%	NRI	347100	GE-UT-209V12 PART No. 21 & LIM-12-.688-SS316
DCA-419-1 FW2 10" Pipe to Pipe	XI-DCA-419-1 3/8/2003	R-A R1.11	XI	UT-E	100%	NRI	014900	GE-PDI-UT-2R3 LIM-10-.593-SS316
EBB-208-2 FW13 12" Pipe to 12"x10" Eccentric Reducer	XI-EBB-208-2 3/11/2003	R-A R1.11	XI	UT-E	100%	RI	139800	GE-PDI-UT-1R3 2 recordable ind. ID Geometry LIM-12-.688-CS
DCA-418-3 N17C Safe End to Nozzle (Az.225 Deg.)	XI-DCA-418-3 3/11/2003	R-A R1.11, R1.16	XI AUG	UT-E	100%	NRI	723700	GE-UT-209V12 Insignificant and Non-relevant ind. SS#4
DBB-203-1 FW6 24" Pipe to Valve HV-41-2F074A	XI-DBB-203-1 3/13/2003	R-A R1.11, R1.18	XI AUG	UT-E	100%	NRI	120600	GE-PDI-UT-1R3 CB 1.6"upstream. LIM-24-1.812-CS
DBB-204-1 FW2 Valve HV-41-2F032B to 24"x 24"x 16" Reducer Tee	XI-DBB-204-1 3/10/2003	R-A R1.11, R1.18	XI AUG	UT-E	100%	RI	123400	GE-PDI-UT-1R3 2 recordable ind. ID Geometry LIM-24-1.812-CS
DBB-204-1 FW4 24" X 24" X 16" Reducer Tee to 16" Elbow	XI-DBB-204-1 3/10/2003	R-A R1.11, R1.18	XI AUG	UT-E	100%	RI	124800	GE-PDI-UT-1R3 ID Geometry LIM-16-1.219-CS

Limerick ISI Component Inspection Results Listing

Unit 2

Interval: 2
Period: 1
Outage: 2R07

Component ID Description	Iso Number Insp. Date	Sect. XI Cat. Item	Inspection Reason(s)	Actual Exam	Code Coverage	Results	Summary Number	Procedure(s) Inspection Comments Cal Block
DBB-204-1 FW6 24" Pipe to Valve HV-41-2F074B	XI-DBB-204-1 3/9/2003	R-A R1.11, R1.18	XI AUG	UT-E	100%	RI	124600	GE-PDI-UT-1R3 1 recordable ind. ID Geometry LIM-24-1.812-CS
DBB-204-1-1A SW2 24"x 24"x 16" Reducer Tee to 24" Pipe	XI-DBB-204-1 3/10/2003	R-A R1.11, R1.18	XI AUG	UT-E	100%	NRI	123800	GE-PDI-UT-1R3 Previous indications were below recording level LIM-24-1.812-CS
DBB-204-1-1A SW7 24" Pipe to 24"x 6" Sweepolet	XI-DBB-204-1 3/9/2003	R-A R1.11, R1.18	XI AUG	UT-E	89%	NRI	124400	GE-PDI-UT-1R3 LIM-24-1.812-CS
DBB-204-1-1B SW4 16" Elbow to 16" Elbow	XI-DBB-204-1 3/10/2003	R-A R1.11, R1.18	XI AUG	UT-E	100%	RI	124000	GE-PDI-UT-1R3 2 Indications, Root Geometry LIM-16-1.219-CS
DBB-204-1-1B SW5 16" Elbow to Pipe	XI-DBB-204-1 3/10/2003	R-A R1.11, R1.18	XI AUG	UT-E	100%	NRI	124200	GE-PDI-UT-1R3 LIM-16-1.219-CS
DLA-207-1 S4C 12"Pipe to Safe End (GE)(Az.150 Degrees)	XI-DLA-207-1 3/10/2003	R-A R1.11, R1.18	XI AUG	UT-E	100%	NRI	109400	GE-PDI-UT-1R3 Previous indications were below recording level LIM-12-.688-CS-R & PART No. 8
DLA-208-1 S4D 12"Pipe to Safe End (GE)(Az.210 Degrees)	XI-DLA-208-1 3/9/2003	R-A R1.11, R1.18	XI AUG	UT-E	100%	NRI	116600	GE-PDI-UT-1R3 Previous indications were below recording level LIM-12-.688-CS-R & PART No. 8
HBB-201-1 FW1 10" x 10" x 8" Tee to 10" Pipe	XI-HBB-201-1 3/11/2003	R-A R1.11, R1.18	XI	UT-E	100%	RI	318200	GE-PDI-UT-1R3 2 recordable ind. Root Geometry LIM-10-.365-CS
HBB-201-1 FW12 8" Elbow to Pipe	XI-HBB-201-1 3/9/2003	R-A R1.11, R1.18	XI	UT-E	53%	RI	320400	GE-PDI-UT-1R3 1 recordable ind. Root Geometry. Unable to scan over weld crown. LIM-8-.322-CS
HBB-201-1 FW13 8" Elbow tc Elbow	XI-HBB-201-1 3/9/2003	R-A R1.11, R1.18	XI	UT-E	100%	NRI	320300	GE-PDI-UT-1R3 LIM-8-.322-CS

Limerick ISI Component Inspection Results Listing

Unit 2

Interval: 2
Period: 1
Outage: 2R07

Component ID Description	Iso Number Insp. Date	Sect. XI Cat. Item	Inspection Reason(s)	Actual Exam	Code Coverage	Results	Summary Number	Procedure(s) Inspection Comments Cal Block
HBB-201-1 FW14 10" x 8" Concentric Reducer to 8" Elbow	XI-HBB-201-1 3/9/2003	R-A R1.11, R1.18	XI	UT-E	100%	NRI	320200	GE-PDI-UT-1R3 LIM-8-.322-CS
HBB-201-1 FW15 8" Flange (20S-212 RCIC Turbine Exhaust) to 10"x10"x8" Tee	XI-HBB-201-1 3/11/2003	R-A R1.11, R1.18	XI	UT-E	100%	RI	319600	GE-PDI-UT-1R3 2 recordable ind. Root Geometry LIM-8-.322-CS
HBB-201-1 FW2 10" Pipe to Elbow	XI-HBB-201-1 3/9/2003	R-A R1.11, R1.18	XI	UT-E	100%	RI	318300	GE-PDI-UT-1R3 2 recordable ind. Root Geometry LIM-10-.365-CS
HBB-201-1 FW3 10" Pipe to Elbow	XI-HBB-201-1 3/9/2003	R-A R1.11, R1.18	XI	UT-E	100%	RI	318400	GE-PDI-UT-1R3 2 recordable ind. Root Geometry LIM-10-.365-CS
HBB-208-1 FW1 20" Pipe to Elbow	XI-HBB-208-1 3/5/2003	R-A R1.11, R1.18	XI	UT-E	100%	RI	161900	GE-PDI-UT-1R3 Root Geometry LIM-20-.375-CS
HBB-208-1 FW13 20" Pipe to Elbow	XI-HBB-208-1 3/5/2003	R-A R1.11, R1.18	XI	UT-E	94%	RI	162400	GE-PDI-UT-1R3 Root Geometry LIM-20-.375-CS
HBB-208-1 FW14 20" Pipe to Pipe	XI-HBB-208-1 3/5/2003	R-A R1.11, R1.18	XI	UT-E	100%	RI	163500	GE-PDI-UT-1R3 Root Geometry LIM-20-.375-CS
HBB-208-1 FW15 20" Pipe to Pipe	XI-HBB-208-1 3/5/2003	R-A R1.11, R1.18	XI	UT-E	100%	NRI	163600	GE-PDI-UT-1R3 LIM-20-.375-CS
HBB-208-1 FW3 20" Elbow to Pipe	XI-HBB-208-1 3/5/2003	R-A R1.11, R1.18	XI	UT-E	100%	RI	161800	GE-PDI-UT-1R3 Root Geometry LIM-20-.375-CS
DCA-204-2 FW1 Valve HV-51-2F015A to Flued Head X-13A	XI-DCA-204-2 3/11/2003	R-A R1.13	XI	UT-WT	100%	NRI	325400	ER-AA-335-004R1 FAC Exam >87.5% Nom. T LIM-12-.688-SS316

Limerick ISI Component Inspection Results Listing
Unit 2

Interval: 2
Period: 1
Outage: 2R07

Component ID Description	Iso Number Insp. Date	Sect. XI Cat. Item	Inspection Reason(s)	Actual Exam	Code Coverage	Results	Summary Number	Procedure(s) Inspection Comments Cal Block
GBB-218-1 FW4	XI-GBB-218-1	R-A	XI	UT-WT	100%	NRI	432300	ER-AA-335-004R1
18"x18"x18" Tee to 18" Pipe	3/10/2003	R1.13						FAC Exam >87.5% Nom. T LIM-18-.500-CS
GBB-218-4 FW2	XI-GBB-218-4	R-A	XI	UT-WT	100%	NRI	448400	ER-AA-335-004R1
18"x18"x18" Tee to 18" Pipe	3/9/2003	R1.13						FAC Exam >87.5% Nom. T LIM-18-.500-CS
APE-2MS-LA WA06	XI-APE-2MS-LA	R-A	XI	UT-E	100%	NRI	174500	GE-PDI-UT-1R3
Flued Head (X-7A) to Valve HV-41-2F028A	3/7/2003	R1.20	AUG					LIM-26-1.013 CS
DBA-206-1-3B SW5	XI-DBA-206-1	R-A	XI	UT-E	100%	RI	127600	GE-PDI-UT-1R3
10" x 10" x 10" Tee to 10" Pipe	3/13/2003	R1.20	AUG					1 recordable ind. ID Geometry LIM-10-.593-CS
DBA-206-1-3B SW6	XI-DBA-206-1	R-A	XI	UT-E	100%	RI	127800	GE-PDI-UT-1R3
10" Pipe to Elbow	3/13/2003	R1.20	AUG					1 recordable ind. ID Geometry LIM-10-.593-CS
DBA-206-1-3B SW7	XI-DBA-206-1	R-A	XI	UT-E	100%	RI	128000	GE-PDI-UT-1R3
10" Elbow to Pipe	3/13/2003	R1.20	AUG					1 recordable ind. ID Geometry LIM-10-.593-CS
DCA-201-2 FW702	XI-DCA-201-2	R-A	XI	UT-E	100%	RI		GE-PDI-UT-2R3
6" Pipe to Valve HV-044-2F004	3/11/2003	R1.20						1 recordable ind. Root Geometry LIM-6-.432-SS316
DCA-205-1 FW9	XI-DCA-205-1	R-A	XI	UT-E	75%	NRI	332200	GE-PDI-UT-2R3
Flued Head (X-12) to Valve HV-51-2F008	3/10/2003	R1.20						LIM-20-.840-SS316NG
DLA-210-1 FW1	XI-DLA-210-1	R-A	XI	UT-E	71%	RI	025900	GE-PDI-UT-2R3
Valve HV-52-208 to Flued Head X-16B	3/12/2003	R1.20						3 recordable indications. ID Geometry LIM-12-.688-SS316
EBB-203-1 FW2	XI-EBB-203-1	R-A	XI	UT-E	100%	RI	216400	GE-PDI-UT-1R3
26" Elbow to Pipe	3/9/2003	R1.20	AUG					1 recordable ind. Root Geometry LIM-26-.928-CS

Limerick ISI Component Inspection Results Listing

Unit 2

Interval: 2
Period: 1
Outage: 2R07

Component ID Description	Iso Number Insp. Date	Sect. XI Cat. Item	Inspection Reason(s)	Actual Exam	Code Coverage	Results	Summary Number	Procedure(s) Inspection Comments Cal Block
EBB-203-1 FW36	XI-EBB-203-1	R-A	XI	UT-E	100%	NRI	221300	GE-PDI-UT-1R3
26" Valve HV-41-2F028A to 26" Pipe I.D. 23.647" Match Valve ID	3/7/2003	R1.20	AUG					Previous indications were below recording level. LIM-26-1.013-CS
EBB-203-1-1 SW1	XI-EBB-203-1	R-A	XI	UT-E	100%	NRI	217000	GE-PDI-UT-1R3
26" Pipe to Elbow	3/9/2003	R1.20	AUG					LIM-26-.928-CS

Limerick ISI Component Inspection Results Listing
Unit 2

Interval: 2
Period: 1
Outage: 2R07

Component ID Description	Iso Number Insp. Date	Sect. XI Cat. Item	Inspection Reason(s)	Actual Exam	Coverage	Results	Summary Number	Procedure(s) Comments
Li2/SA Shroud Annulus Surfaces	XI-BN-10 3/10/2003	B-N-1 B13.10	AUG	VT-3	90%	NRI		GE-VT-204V6 Overall camera scan view showing RPV wall, across shroud ledge, and up the shroud wall.
Li2/P1A Core Spray "A" Loop N5B Thermal Sleeve to T-Box Weld 300 Az	XI-BN-8 3/9/2003	N/A N/A	RE	UT	40%	NRI		GE-UT-511V10
Li2/P1B Core Spray "B" Loop N5A Thermal Sleeve to T-Box Weld 60 Az	XI-BN-8 3/9/2003	N/A N/A	RE	UT	40%	NRI		GE-UT-511V10
Li2/P2A Core Spray "A" Loop Header T-Box Cover Plate Weld 300 Az	XI-BN-8 3/10/2003	N/A N/A	RE	UT	100%	NRI		GE-UT-511V10
Li2/P2B Core Spray "B" Loop Header T-Box Cover Plate Weld 60 Az	XI-BN-8 3/10/2003	N/A N/A	RE	UT	100%	NRI		GE-UT-511V10
Li2/P3aA Core Spray "A" Loop Header T-Box to Pipe Weld Right Side 300 Az	XI-BN-8 3/9/2003	N/A N/A	RE	UT	100%	NRI		GE-UT-511V10
Li2/P3aB Core Spray "B" Loop Header T-Box to Pipe Weld Right Side 60 Az	XI-BN-8 3/8/2003	N/A N/A	RE	UT	100%	NRI		GE-UT-511V10
Li2/P3bA Core Spray "A" Loop Header T-Box to Pipe Weld Left Side 300 Az	XI-BN-8 3/9/2003	N/A N/A	RE	UT	100%	NRI		GE-UT-511V10
Li2/P3bB Core Spray "B" Loop Header T-Box to Pipe Weld Left Side 60 Az	XI-BN-8 3/9/2003	N/A N/A	RE	UT EVT-1	100% 65%	NRI NRI		GE-UT-511V10 Supplemental visual examination performed to support evaluation of ultrasonic indication.
Li2/P4cA Core Spray "A" Loop "A' Downcomer Pipe to Elbow Weld 352.5 Az (Shroud Elevation)	XI-BN-8 3/7/2003	N/A N/A	RE	UT	100%	NRI		GE-UT-511V10
Li2/P4cB Core Spray "B" Loop "B' Downcomer Pipe to Elbow Weld 7.5 Az (Shroud Elevation)	XI-BN-8 3/8/2003	N/A N/A	RE	UT	100%	NRI		GE-UT-511V10

Limerick ISI Component Inspection Results Listing

Unit 2

Interval: 2
Period: 1
Outage: 2R07

Component ID Description	Iso Number Insp. Date	Sect. XI Cat. Item	Inspection Reason(s)	Actual Exam	Coverage	Results	Summary Number	Procedure(s) Comments
Li2/P4cC Core Spray "A" Loop "C" Downcomer Pipe to Elbow Weld 187.5 Az (Shroud Elevation)	XI-BN-8 3/8/2003	N/A N/A	RE	UT	100%	NRI		GE-UT-511V10
Li2/P4cD Core Spray "B" Loop "D" Downcomer Pipe to Elbow Weld 172.5 Az (Shroud Elevation)	XI-BN-8 3/8/2003	N/A N/A	RE	UT	100%	NRI		GE-UT-511V10
Li2/P4dB Core Spray "B" Loop "B" Downcomer Elbow to Shroud Pipe Weld 7.5 Az	XI-BN-8 3/10/2003	N/A N/A	RE	EVT-1	85%	NRI		GE-VT-204V6
Li2/P5A Core Spray "A" Loop "A" Downcomer Pipe to Sliding Sleeve Field Weld 352.5 Az	XI-BN-8 3/7/2003	N/A N/A	RE	UT	100%	NRI		GE-UT-511V10
Li2/P5B Core Spray "B" Loop "B" Downcomer Pipe to Sliding Sleeve Field Weld 7.5 Az	XI-BN-8 3/8/2003	N/A N/A	RE	UT	100%	NRI		GE-UT-511V10
Li2/P5C Core Spray "A" Loop "C" Downcomer Pipe to Sliding Sleeve Field Weld 187.5 Az	XI-BN-8 3/8/2003	N/A N/A	RE	UT	100%	NRI		GE-UT-511V10
Li2/P5D Core Spray "B" Loop "D" Downcomer Pipe to Sliding Sleeve Field Weld 172.5 Az	XI-BN-8 3/8/2003	N/A N/A	RE	UT	100%	NRI		GE-UT-511V10
Li2/P6A Core Spray "A" Loop "A" Sliding Sleeve to Outer Sleeve Field Weld 352.5 Az	XI-BN-8 3/7/2003	N/A N/A	RE	UT	100%	NRI		GE-UT-511V10
Li2/P6B Core Spray "B" Loop "B" Sliding Sleeve to Outer Sleeve Field Weld 7.5 Az	XI-BN-8 3/6/2003	N/A N/A	RE	UT	100%	NRI		GE-UT-511V10
Li2/P6C Core Spray "A" Loop "C" Sliding Sleeve to Outer Sleeve Field Weld 187.5 Az	XI-BN-8 3/8/2003	N/A N/A	RE	UT	100%	NRI		GE-UT-511V10
Li2/P6D Core Spray "B" Loop "D" Sliding Sleeve to Outer Sleeve Field Weld 172.5 Az	XI-BN-8 3/8/2003	N/A N/A	RE	UT	100%	NRI		GE-UT-511V10
Li2/P7A Core Spray "A" Loop "A" Outer Sleeve to Pipe Shop Weld 352.5 Az	XI-BN-8 3/7/2003	N/A N/A	RE	UT	100%	NRI		GE-UT-511V10

Limerick ISI Component Inspection Results Listing

Unit 2

Interval: 2
Period: 1
Outage: 2R07

Component ID Description	Iso Number Insp. Date	Sect. XI Cat. Item	Inspection Reason(s)	Actual Exam	Coverage	Results	Summary Number	Procedure(s) Comments
Li2/P7B Core Spray "B" Loop "B" Outer Sleeve to Pipe Shop Weld 7.5 Az	XI-BN-8 3/8/2003	N/A N/A	RE	UT	100%	NRI		GE-UT-511V10
Li2/P7C Core Spray "A" Loop "C" Outer Sleeve to Pipe Shop Weld 187.5 Az	XI-BN-8 3/8/2003	N/A N/A	RE	UT	100%	NRI		GE-UT-511V10
Li2/P7D Core Spray "B" Loop "D" Outer Sleeve to Pipe Shop Weld 172.5 Az	XI-BN-8 3/8/2003	N/A N/A	RE	UT	100%	NRI		GE-UT-511V10
Li2/P8aA Core Spray "A" Loop "A" Shroud Pipe to Collar Weld 352.5 Az	XI-BN-8 3/10/2003	N/A N/A	RE	EVT-1	100%	NRI		GE-VT-204V6
Li2/P8aB Core Spray "B" Loop "B" Shroud Pipe to Collar Weld 7.5 Az	XI-BN-8 3/10/2003	N/A N/A	RE	EVT-1	85%	NRI		GE-VT-204V6
Li2/P8aC Core Spray "A" Loop "C" Shroud Pipe to Collar Weld 187.5 Az	XI-BN-8 3/10/2003	N/A N/A	RE	EVT-1	90%	NRI		GE-VT-204V6
Li2/P8aD Core Spray "B" Loop "D" Shroud Pipe to Collar Weld 172.5 Az	XI-BN-8 3/10/2003	N/A N/A	RE	EVT-1	85%	NRI		GE-VT-204V6
Li2/P8bA Core Spray "A" Loop "A" Collar to Shroud Weld 352.5 Az	XI-BN-8 3/8/2003	N/A N/A	RE	UT	100%	NRI		GE-UT-511V10
Li2/P8bB Core Spray "B" Loop "B" Collar to Shroud Weld 7.5 Az	XI-BN-8 3/8/2003	N/A N/A	RE	UT	100%	NRI		GE-UT-511V10
Li2/P8bC Core Spray "A" Loop "C" Collar to Shroud Weld 187.5 Az	XI-BN-8 3/8/2003	N/A N/A	RE	UT	100%	NRI		GE-UT-511V10
Li2/P8bD Core Spray "B" Loop "D" Collar to Shroud Weld 172.5 Az	XI-BN-8 3/8/2003	N/A N/A	RE	UT	100%	NRI		GE-UT-511V10
Li2/PB4 Core Spray "B" Loop "B and D" Header Pipe Bracket 165 Az	XI-BN-8 3/7/2003	N/A N/A	RE	VT-1	100%	NRI		GE-VT-204V6

Limerick ISI Component Inspection Results Listing

Unit 2

Interval: 2
Period: 1
Outage: 2R07

Component ID Description	Iso Number Insp. Date	Sect. XI Cat. Item	Inspection Reason(s)	Actual Exam	Coverage	Results	Summary Number	Procedure(s) Comments
Li2/PB5 Core Spray "A" Loop "A and C" Header Pipe Bracket 195 Az	XI-BN-8 3/10/2003	N/A N/A	RE	VT-1	100%	NRI		GE-VT-204V6
Li2/PB6 Core Spray "A" Loop "A and C" Header Pipe Radial Bracket 247.5 Az	XI-BN-8 3/8/2003	N/A N/A	RE	VT-1	100%	NRI		GE-VT-204V6
Li2/S1A "A" Sparger T-Box Cover Plate Weld (352.5 Az)	XI-BN-8 3/9/2003	N/A N/A	RE	EVT-1	100%	NRI		GE-VT-204V6
Li2/S1B "B" Sparger T-Box Cover Plate Weld (7.5 Az)	XI-BN-8 3/9/2003	N/A N/A	RE	EVT-1	100%	NRI		GE-VT-204V6
Li2/S2aA "A" Sparger T-Box to Pipe Weld (Right Side) (352.5 Az)	XI-BN-8 3/9/2003	N/A N/A	RE	EVT-1	60%	NRI		GE-VT-204V6
Li2/S2aB "B" Sparger T-Box to Pipe Weld (Right Side) (7.5 Az)	XI-BN-8 3/9/2003	N/A N/A	RE	EVT-1	60%	NRI		GE-VT-204V6
Li2/S2bA "A" Sparger T-Box to Pipe Weld (Left Side) (352.5 Az)	XI-BN-8 3/9/2003	N/A N/A	RE	EVT-1	60%	NRI		GE-VT-204V6
Li2/S2bB "B" Sparger T-Box to Pipe Weld (Left Side) (7.5 Az)	XI-BN-8 3/9/2003	N/A N/A	RE	EVT-1	60%	NRI		GE-VT-204V6
Li2/S3aXXC "C" Sparger Pipe to Nozzle Weld, Typical of 65 Nozzles (XX) (93-267 Az)	XI-BN-8 3/10/2003	N/A N/A	BL	VT-1	90%	NRI		GE-VT-204V6
Li2/S3bXXC "C" Sparger Nozzle to Orifice Weld, Typical of 65 Orifices (XX) (93-267 Az)	XI-BN-8 3/10/2003	N/A N/A	BL	VT-1	90%	NRI		GE-VT-204V6
Li2/S3dXXC "C" Sparger Nozzle Stitch Welds, 2 Welds 180 Deg Apt, 5 Plcs Ea Noz. (93 - 267 Az)	XI-BN-8 3/10/2003	N/A N/A	BL	VT-1	90%	NRI		GE-VT-204V6
Li2/S4aA "A" Sparger Pipe to End Cap Weld (Right Side) (88 Az)	XI-BN-8 3/10/2003	N/A N/A	RE	EVT-1	70%	NRI		GE-VT-204V6
Li2/S4aB "B" Sparger Pipe to End Cap Weld (Right Side) (88 Az)	XI-BN-8 3/10/2003	N/A N/A	RE	EVT-1	70%	NRI		GE-VT-204V6

Limerick ISI Component Inspection Results Listing

Unit 2

Interval: 2
Period: 1
Outage: 2R07

Component ID Description	Iso Number Insp. Date	Sect. XI Cat. Item	Inspection Reason(s)	Actual Exam	Coverage	Results	Summary Number	Procedure(s) Comments
Li2/S4bA "A" Sparger Pipe to End Cap Weld (Left Side) (273 Az)	XI-BN-8 3/9/2003	N/A N/A	RE	EVT-1	75%	NRI		GE-VT-204V6
Li2/S4bB "B" Sparger Pipe to End Cap Weld (Left Side) (273 Az)	XI-BN-8 3/9/2003	N/A N/A	RE	EVT-1	75%	NRI		GE-VT-204V6
Li2/SB01 "A and B" Sparger Bracket and Shroud Attachment Welds (7.5 Az)	XI-BN-8 3/9/2003	N/A N/A	RE	VT-1	75%	NRI		GE-VT-204V6
Li2/SB02 "A and B" Sparger Bracket and Shroud Attachment Welds (44 Az)	XI-BN-8 3/10/2003	N/A N/A	RE	VT-1	90%	NRI		GE-VT-204V6
Li2/SB03 "A and B" Sparger Bracket and Shroud Attachment Welds (84 Az)	XI-BN-8 3/10/2003	N/A N/A	RE	VT-1	90%	NRI		GE-VT-204V6
Li2/SB04 "C and D" Sparger Bracket and Shroud Attachment Welds (96 Az)	XI-BN-8 3/10/2003	N/A N/A	RE	VT-1	90%	NRI		GE-VT-204V6
Li2/SB05 "C and D" Sparger Bracket and Shroud Attachment Welds (136 Az)	XI-BN-8 3/10/2003	N/A N/A	RE	VT-1	90%	NRI		GE-VT-204V6
Li2/SB06 "C and D" Sparger Bracket and Shroud Attachment Welds (172.5 Az)	XI-BN-8 3/9/2003	N/A N/A	RE	VT-1	90%	NRI		GE-VT-204V6
Li2/H09 Core Shroud Support Plate to RPV Weld	XI-BN-10 3/6/2003	B-N-2 B13.40	BL	UT	10%	NRI		GE-UT-707V5
Li2/JP01 AD-1 Jet Pump Adapter Top to Adapter Bottom Weld - Bimetallic Weld	XI-BN-04 3/9/2003	N/A N/A	BL	EVT-1	40%	NRI		GE-VT-204V6
Li2/JP01 AD-2 Jet Pump Adapter Bottom (Lower Ring) to Shroud Support Plate Weld	XI-BN-04 3/9/2003	N/A N/A	BL	EVT-1	40%	NRI		GE-VT-204V6
Li2/JP01 DF-1 Jet Pump Diffuser Collar to Diffuser Shell Weld	XI-BN-04 3/9/2003	N/A N/A	BL	EVT-1	40%	NRI		GE-VT-204V6
Li2/JP01 DF-2 Jet Pump Diffuser Shell to Tailpipe Weld	XI-BN-04 3/9/2003	N/A N/A	BL	EVT-1	40%	NRI		GE-VT-204V6

Limerick ISI Component Inspection Results Listing

Unit 2

Interval: 2
Period: 1
Outage: 2R07

Component ID Description	Iso Number Insp. Date	Sect. XI Cat. Item	Inspection Reason(s)	Actual Exam	Coverage	Results	Summary Number	Procedure(s) Comments
Li2/JP01 IN-4 Jet Pump Inlet to Mixer Weld	XI-BN-04 3/9/2003	N/A N/A	BL	EVT-1	40%	NRI		GE-VT-204V6
Li2/JP01 MX-2 Jet Pump Barrel to Adapter Weld	XI-BN-04 3/9/2003	N/A N/A	BL	EVT-1	40%	NRI		GE-VT-204V6
Li2/JP01-02 RS-1 Jet Pump Riser Elbow to Thermal Sleeve Weld	XI-BN-04 3/9/2003	N/A N/A	BL	EVT-1	95%	NRI		GE-VT-204V6
Li2/JP01-02 RS-2 Jet Pump Riser Elbow to Riser Pipe Weld	XI-BN-04 3/10/2003	N/A N/A	BL	EVT-1	50%	NRI		GE-VT-204V6
Li2/JP01-02 RS-3 Jet Pump Riser Pipe to Transition Piece Weld	XI-BN-04 3/10/2003	N/A N/A	BL	EVT-1	40%	NRI		GE-VT-204V6
Li2/JP01-02 RS-6 Jet Pump Riser Pipe to Restrainer Bracket Circumferential Weld	XI-BN-04 3/10/2003	N/A N/A	BL	EVT-1	90%	NRI		GE-VT-204V6
Li2/JP01-02 RS-7 Jet Pump Riser Pipe to Restrainer Bracket Circumferential Weld	XI-BN-04 3/10/2003	N/A N/A	BL	EVT-1	90%	NRI		GE-VT-204V6
Li2/JP01-02 RS-8 Jet Pump Riser Pipe to Riser Brace Circumferential Weld	XI-BN-04 3/10/2003	N/A N/A	BL	EVT-1	90%	NRI		GE-VT-204V6
Li2/JP01-02 RS-9 Jet Pump Riser Pipe to Riser Brace Circumferential Weld	XI-BN-04 3/9/2003	N/A N/A	BL	EVT-1	90%	NRI		GE-VT-204V6
Li2/JP03-04 RS-3 Jet Pump Riser Pipe to Transition Piece Weld	XI-BN-04 3/7/2003	N/A N/A	BL	EVT-1	40%	NRI		GE-VT-204V6
Li2/JP05 AD-1 Jet Pump Adapter Top to Adapter Bottom Weld - Bimetallic Weld	XI-BN-04 3/9/2003	N/A N/A	BL	EVT-1	40%	NRI		GE-VT-204V6
Li2/JP05 AD-2 Jet Pump Adapter Bottom (Lower Ring) to Shroud Support Plate Weld	XI-BN-04 3/9/2003	N/A N/A	BL	EVT-1	45%	NRI		GE-VT-204V6
Li2/JP05 BB-3 Jet Pump Hold Down Beam Transition Region	XI-BN-04 3/8/2003	N/A N/A	SP	EVT-1	100%	NRI		GE-VT-204V6 Visually examine the Transition Region of the Jet Pump Hold Down Beam as a result of recent Industry Experience (Quad Cities).

Limerick ISI Component Inspection Results Listing

Unit 2

Interval: 2
Period: 1
Outage: 2R07

Component ID Description	Iso Number Insp. Date	Sect. XI Cat. Item	Inspection Reason(s)	Actual Exam	Coverage	Results	Summary Number	Procedure(s) Comments
Li2/JP05 DF-1 Jet Pump Diffuser Collar to Diffuser Shell Weld	XI-BN-04 3/9/2003	N/A N/A	BL	EVT-1	40%	NRI		GE-VT-204V6
Li2/JP05 DF-2 Jet Pump Diffuser Shell to Tailpipe Weld	XI-BN-04 3/9/2003	N/A N/A	BL	EVT-1	40%	NRI		GE-VT-204V6
Li2/JP05 IN-4 Jet Pump Inlet to Mixer Weld	XI-BN-04 3/8/2003	N/A N/A	BL	EVT-1	50%	NRI		GE-VT-204V6
Li2/JP05 MX-2 Jet Pump Barrel to Adapter Weld	XI-BN-04 3/9/2003	N/A N/A	BL	EVT-1	45%	NRI		GE-VT-204V6
Li2/JP05-06 RB-1a Jet Pump Riser Brace Leaf to RPV Pad Weld	XI-BN-04 3/9/2003	N/A N/A	BL	EVT-1	90%	NRI		GE-VT-204V6
Li2/JP05-06 RB-1b Jet Pump Riser Brace Leaf to RPV Pad Weld	XI-BN-04 3/9/2003	N/A N/A	BL	EVT-1	90%	NRI		GE-VT-204V6
Li2/JP05-06 RB-1c Jet Pump Riser Brace Leaf to RPV Pad Weld	XI-BN-04 3/9/2003	N/A N/A	BL	EVT-1	90%	NRI		GE-VT-204V6
Li2/JP05-06 RB-1d Jet Pump Riser Brace Leaf to RPV Pad Weld	XI-BN-04 3/9/2003	N/A N/A	BL	EVT-1	90%	NRI		GE-VT-204V6
Li2/JP05-06 RB-2a Jet Pump Riser Brace Leaf to Yoke Weld	XI-BN-04 3/9/2003	N/A N/A	BL	EVT-1	90%	NRI		GE-VT-204V6
Li2/JP05-06 RB-2b Jet Pump Riser Brace Leaf to Yoke Weld	XI-BN-04 3/9/2003	N/A N/A	BL	EVT-1	90%	NRI		GE-VT-204V6
Li2/JP05-06 RB-2c Jet Pump Riser Brace Leaf to Yoke Weld	XI-BN-04 3/9/2003	N/A N/A	BL	EVT-1	90%	NRI		GE-VT-204V6
Li2/JP05-06 RB-2d Jet Pump Riser Brace Leaf to Yoke Weld	XI-BN-04 3/9/2003	N/A N/A	BL	EVT-1	90%	NRI		GE-VT-204V6
Li2/JP05-06 RS-1 Jet Pump Riser Elbow to Thermal Sleeve Weld	XI-BN-04 3/9/2003	N/A N/A	BL	EVT-1	90%	NRI		GE-VT-204V6
Li2/JP05-06 RS-2 Jet Pump Riser Elbow to Riser Pipe Weld	XI-BN-04 3/10/2003	N/A N/A	BL	EVT-1	95%	NRI		GE-VT-204V6
Li2/JP05-06 RS-3 Jet Pump Riser Pipe to Transition Piece Weld	XI-BN-04 3/9/2003	N/A N/A	BL	EVT-1	40%	NRI		GE-VT-204V6

Limerick ISI Component Inspection Results Listing

Unit 2

Interval: 2
Period: 1
Outage: 2R07

Component ID Description	Iso Number Insp. Date	Sect. XI Cat. Item	Inspection Reason(s)	Actual Exam	Coverage	Results	Summary Number	Procedure(s) Comments
Li2/JP05-06 RS-6 Jet Pump Riser Pipe to Restrainer Bracket Circumferential Weld	XI-BN-04 3/9/2003	N/A N/A	BL	EVT-1	75%	NRI		GE-VT-204V6
Li2/JP05-06 RS-7 Jet Pump Riser Pipe to Restrainer Bracket Circumferential Weld	XI-BN-04 3/9/2003	N/A N/A	BL	EVT-1	75%	NRI		GE-VT-204V6
Li2/JP05-06 RS-8 Jet Pump Riser Pipe to Riser Brace Circumferential Weld	XI-BN-04 3/9/2003	N/A N/A	BL	EVT-1	100%	NRI		GE-VT-204V6
Li2/JP05-06 RS-9 Jet Pump Riser Pipe to Riser Brace Circumferential Weld	XI-BN-04 3/9/2003	N/A N/A	BL	EVT-1	100%	NRI		GE-VT-204V6
Li2/JP06 AD-1 Jet Pump Adapter Top to Adapter Bottom Weld - Bimetallic Weld	XI-BN-04 3/9/2003	N/A N/A	BL	EVT-1	45%	NRI		GE-VT-204V6
Li2/JP06 AD-2 Jet Pump Adapter Bottom (Lower Ring) to Shroud Support Plate Weld	XI-BN-04 3/9/2003	N/A N/A	BL	EVT-1	45%	NRI		GE-VT-204V6
Li2/JP06 BB-3 Jet Pump Hold Down Beam Transition Region	XI-BN-04 3/8/2003	N/A N/A	SP	EVT-1	100%	NRI		GE-VT-204V6 Visually examine the Transition Region of the Jet Pump Hold Down Beam as a result of recent Industry Experience (Quad Cities).
Li2/JP06 DF-1 Jet Pump Diffuser Collar to Diffuser Shell Weld	XI-BN-04 3/9/2003	N/A N/A	BL	EVT-1	40%	NRI		GE-VT-204V6
Li2/JP06 DF-2 Jet Pump Diffuser Shell to Tailpipe Weld	XI-BN-04 3/9/2003	N/A N/A	BL	EVT-1	30%	NRI		GE-VT-204V6
Li2/JP06 IN-4 Jet Pump Inlet to Mixer Weld	XI-BN-04 3/9/2003	N/A N/A	BL	EVT-1	40%	NRI		GE-VT-204V6
Li2/JP06 MX-2 Jet Pump Barrel to Adapter Weld	XI-BN-04 3/9/2003	N/A N/A	BL	EVT-1	40%	NRI		GE-VT-204V6
Li2/JP07-08 RS-3 Jet Pump Riser Pipe to Transition Piece Weld	XI-BN-04 3/9/2003	N/A N/A	BL	EVT-1	60%	NRI		GE-VT-204V6
Li2/JP09-10 RS-3 Jet Pump Riser Pipe to Transition Piece Weld	XI-BN-04 3/7/2003	N/A N/A	BL	EVT-1	60%	NRI		GE-VT-204V6

Limerick ISI Component Inspection Results Listing

Unit 2

Interval: 2
Period: 1
Outage: 2R07

Component ID Description	Iso Number Insp. Date	Sect. XI Cat. Item	Inspection Reason(s)	Actual Exam	Coverage	Results	Summary Number	Procedure(s) Comments
Li2/JP11 AD-1 Jet Pump Adapter Top to Adapter Bottom Weld - Bimetallic Weld	XI-BN-04 3/6/2003	N/A N/A	BL	EVT-1	40%	NRI		GE-VT-204V6
Li2/JP11 AD-2 Jet Pump Adapter Bottom (Lower Ring) to Shroud Support Plate Weld	XI-BN-04 3/6/2003	N/A N/A	BL	EVT-1	45%	NRI		GE-VT-204V6
Li2/JP11 DF-1 Jet Pump Diffuser Collar to Diffuser Shell Weld	XI-BN-04 3/6/2003	N/A N/A	BL	EVT-1	45%	NRI		GE-VT-204V6
Li2/JP11 DF-2 Jet Pump Diffuser Shell to Tailpipe Weld	XI-BN-04 3/6/2003	N/A N/A	BL	EVT-1	45%	NRI		GE-VT-204V6
Li2/JP11 IN-4 Jet Pump Inlet to Mixer Weld	XI-BN-04 3/7/2003	N/A N/A	BL	EVT-1	40%	NRI		GE-VT-204V6
Li2/JP11 MX-2 Jet Pump Barrel to Adapter Weld	XI-BN-04 3/7/2003	N/A N/A	BL	EVT-1	45%	NRI		GE-VT-204V6
Li2/JP11-12 RB-1a Jet Pump Riser Brace Leaf to RPV Pad Weld	XI-BN-04 3/10/2003	N/A N/A	BL	EVT-1	100%	NRI		GE-VT-204V6
Li2/JP11-12 RB-1b Jet Pump Riser Brace Leaf to RPV Pad Weld	XI-BN-04 3/10/2003	N/A N/A	BL	EVT-1	100%	NRI		GE-VT-204V6
Li2/JP11-12 RB-1c Jet Pump Riser Brace Leaf to RPV Pad Weld	XI-BN-04 3/10/2003	N/A N/A	BL	EVT-1	100%	NRI		GE-VT-204V6
Li2/JP11-12 RB-1d Jet Pump Riser Brace Leaf to RPV Pad Weld	XI-BN-04 3/10/2003	N/A N/A	BL	EVT-1	100%	NRI		GE-VT-204V6
Li2/JP11-12 RB-2a Jet Pump Riser Brace Leaf to Yoke Weld	XI-BN-04 3/10/2003	N/A N/A	BL	EVT-1	50%	NRI		GE-VT-204V6
Li2/JP11-12 RB-2b Jet Pump Riser Brace Leaf to Yoke Weld	XI-BN-04 3/10/2003	N/A N/A	BL	EVT-1	50%	NRI		GE-VT-204V6
Li2/JP11-12 RB-2c Jet Pump Riser Brace Leaf to Yoke Weld	XI-BN-04 3/10/2003	N/A N/A	BL	EVT-1	50%	NRI		GE-VT-204V6
Li2/JP11-12 RB-2d Jet Pump Riser Brace Leaf to Yoke Weld	XI-BN-04 3/10/2003	N/A N/A	BL	EVT-1	50%	NRI		GE-VT-204V6
Li2/JP11-12 RS-6 Jet Pump Riser Pipe to Restrainer Bracket Circumferential Weld	XI-BN-04 3/10/2003	N/A N/A	BL	EVT-1	70%	NRI		GE-VT-204V6

Limerick ISI Component Inspection Results Listing

Unit 2

Interval: 2
Period: 1
Outage: 2R07

Component ID Description	Iso Number Insp. Date	Sect. XI Cat. Item	Inspection Reason(s)	Actual Exam	Coverage	Results	Summary Number	Procedure(s) Comments
Li2/JP11-12 RS-7 Jet Pump Riser Pipe to Restrainer Bracket Circumferential Weld	XI-BN-04 3/10/2003	N/A N/A	BL	EVT-1	70%	NRI		GE-VT-204V6
Li2/JP11-12 RS-8 Jet Pump Riser Pipe to Riser Brace Circumferential Weld	XI-BN-04 3/10/2003	N/A N/A	BL	EVT-1	95%	NRI		GE-VT-204V6
Li2/JP11-12 RS-9 Jet Pump Riser Pipe to Riser Brace Circumferential Weld	XI-BN-04 3/10/2003	N/A N/A	BL	EVT-1	95%	NRI		GE-VT-204V6
Li2/JP12 AD-1 Jet Pump Adapter Top to Adapter Bottom Weld - Bimetallic Weld	XI-BN-04 3/10/2003	N/A N/A	BL	EVT-1	45%	NRI		GE-VT-204V6
Li2/JP12 AD-2 Jet Pump Adapter Bottom (Lower Ring) to Shroud Support Plate Weld	XI-BN-04 3/10/2003	N/A N/A	BL	EVT-1	45%	NRI		GE-VT-204V6
Li2/JP12 DF-1 Jet Pump Diffuser Collar to Diffuser Shell Weld	XI-BN-04 3/7/2003	N/A N/A	BL	EVT-1	45%	NRI		GE-VT-204V6
Li2/JP12 DF-2 Jet Pump Diffuser Shell to Tailpipe Weld	XI-BN-04 3/10/2003	N/A N/A	BL	EVT-1	40%	NRI		GE-VT-204V6
Li2/JP12 IN-4 Jet Pump Inlet to Mixer Weld	XI-BN-04 3/10/2003	N/A N/A	BL	EVT-1	40%	NRI		GE-VT-204V6
Li2/JP12 MX-2 Jet Pump Barrel to Adapter Weld	XI-BN-04 3/10/2003	N/A N/A	BL	EVT-1	45%	NRI		GE-VT-204V6
Li2/JP13 AD-1 Jet Pump Adapter Top to Adapter Bottom Weld - Bimetallic Weld	XI-BN-04 3/10/2003	N/A N/A	BL	EVT-1	45%	NRI		GE-VT-204V6
Li2/JP13 AD-2 Jet Pump Adapter Bottom (Lower Ring) to Shroud Support Plate Weld	XI-BN-04 3/10/2003	N/A N/A	BL	EVT-1	45%	NRI		GE-VT-204V6
Li2/JP13 DF-1 Jet Pump Diffuser Collar to Diffuser Shell Weld	XI-BN-04 3/10/2003	N/A N/A	BL	EVT-1	45%	NRI		GE-VT-204V6
Li2/JP13 DF-2 Jet Pump Diffuser Shell to Tailpipe Weld	XI-BN-04 3/10/2003	N/A N/A	BL	EVT-1	40%	NRI		GE-VT-204V6
Li2/JP13 IN-4 Jet Pump Inlet to Mixer Weld	XI-BN-04 3/10/2003	N/A N/A	BL	EVT-1	40%	NRI		GE-VT-204V6

Limerick ISI Component Inspection Results Listing

Unit 2

Interval: 2
Period: 1
Outage: 2R07

Component ID Description	Iso Number Insp. Date	Sect. XI Cat. Item	Inspection Reason(s)	Actual Exam	Coverage	Results	Summary Number	Procedure(s) Comments
Li2/JP13 MX-2	XI-BN-04	N/A	BL	EVT-1	40%	NRI		GE-VT-204V6
Jet Pump Barrel to Adapter Weld	3/10/2003	N/A						
Li2/JP13-14 RB-1a	XI-BN-04	N/A	BL	EVT-1	100%	NRI		GE-VT-204V6
Jet Pump Riser Brace Leaf to RPV Pad Weld	3/9/2003	N/A						
Li2/JP13-14 RB-1b	XI-BN-04	N/A	BL	EVT-1	100%	NRI		GE-VT-204V6
Jet Pump Riser Brace Leaf to RPV Pad Weld	3/9/2003	N/A						
Li2/JP13-14 RB-1c	XI-BN-04	N/A	BL	EVT-1	100%	NRI		GE-VT-204V6
Jet Pump Riser Brace Leaf to RPV Pad Weld	3/9/2003	N/A						
Li2/JP13-14 RB-1d	XI-BN-04	N/A	BL	EVT-1	100%	NRI		GE-VT-204V6
Jet Pump Riser Brace Leaf to RPV Pad Weld	3/9/2003	N/A						
Li2/JP13-14 RB-2a	XI-BN-04	N/A	BL	EVT-1	50%	NRI		GE-VT-204V6
Jet Pump Riser Brace Leaf to Yoke Weld	3/9/2003	N/A						
Li2/JP13-14 RB-2b	XI-BN-04	N/A	BL	EVT-1	50%	NRI		GE-VT-204V6
Jet Pump Riser Brace Leaf to Yoke Weld	3/9/2003	N/A						
Li2/JP13-14 RB-2c	XI-BN-04	N/A	BL	EVT-1	50%	NRI		GE-VT-204V6
Jet Pump Riser Brace Leaf to Yoke Weld	3/9/2003	N/A						
Li2/JP13-14 RB-2d	XI-BN-04	N/A	BL	EVT-1	50%	NRI		GE-VT-204V6
Jet Pump Riser Brace Leaf to Yoke Weld	3/9/2003	N/A						
Li2/JP13-14 RS-6	XI-BN-04	N/A	BL	EVT-1	75%	NRI		GE-VT-204V6
Jet Pump Riser Pipe to Restrainer Bracket Circumferential Weld	3/10/2003	N/A						
Li2/JP13-14 RS-7	XI-BN-04	N/A	BL	EVT-1	70%	NRI		GE-VT-204V6
Jet Pump Riser Pipe to Restrainer Bracket Circumferential Weld	3/9/2003	N/A						
Li2/JP13-14 RS-8	XI-BN-04	N/A	BL	EVT-1	100%	NRI		GE-VT-204V6
Jet Pump Riser Pipe to Riser Brace Circumferential Weld	3/9/2003	N/A						
Li2/JP13-14 RS-9	XI-BN-04	N/A	BL	EVT-1	100%	NRI		GE-VT-204V6
Jet Pump Riser Pipe to Riser Brace Circumferential Weld	3/9/2003	N/A						
Li2/JP14 AD-1	XI-BN-04	N/A	BL	EVT-1	40%	NRI		GE-VT-204V6
Jet Pump Adapter Top to Adapter Bottom Weld - Bimetallic Weld	3/7/2003	N/A						

Limerick ISI Component Inspection Results Listing

Unit 2

Interval: 2
Period: 1
Outage: 2R07

Component ID Description	Iso Number Insp. Date	Sect. XI Cat. Item	Inspection Reason(s)	Actual Exam	Coverage	Results	Summary Number	Procedure(s) Comments
Li2/JP14 AD-2 Jet Pump Adapter Bottom (Lower Ring) to Shroud Support Plate Weld	XI-BN-04 3/7/2003	N/A N/A	BL	EVT-1	45%	NRI		GE-VT-204V6
Li2/JP14 DF-1 Jet Pump Diffuser Collar to Diffuser Shell Weld	XI-BN-04 3/7/2003	N/A N/A	BL	EVT-1	45%	NRI		GE-VT-204V6
Li2/JP14 DF-2 Jet Pump Diffuser Shell to Tailpipe Weld	XI-BN-04 3/9/2003	N/A N/A	BL	EVT-1	40%	NRI		GE-VT-204V6
Li2/JP14 IN-4 Jet Pump Inlet to Mixer Weld	XI-BN-04 3/9/2003	N/A N/A	BL	EVT-1	40%	NRI		GE-VT-204V6
Li2/JP14 MX-2 Jet Pump Barrel to Adapter Weld	XI-BN-04 3/7/2003	N/A N/A	BL	EVT-1	45%	NRI		GE-VT-204V6
Li2/45-03b N17A LPCI Coupling Shroud Attachment Ring to Shroud Weld (045 Az)	XI-BN-14 3/9/2003	N/A N/A	BL	EVT-1	80%	NRI		GE-VT-204V6
Li2/45-03b N17B LPCI Coupling Shroud Attachment Ring to Shroud Weld (135 Az)	XI-BN-14 3/10/2003	N/A N/A	BL	EVT-1	80%	NRI		GE-VT-204V6
Li2/45-03b N17C LPCI Coupling Shroud Attachment Ring to Shroud Weld (225 Az)	XI-BN-14 3/10/2003	N/A N/A	BL	EVT-1	80%	NRI		GE-VT-204V6
Li2/45-12 N17A LPCI Coupling Sleeve Flange to Thermal Sleeve Weld at RPV (045 Az)	XI-BN-14 3/10/2003	N/A N/A	BL	EVT-1	20%	NRI		GE-VT-204V6
Li2/45-12 N17B LPCI Coupling Sleeve Flange to Thermal Sleeve Weld at RPV (135 Az)	XI-BN-14 3/10/2003	N/A N/A	BL	EVT-1	20%	NRI		GE-VT-204V6
Li2/45-12 N17C LPCI Coupling Sleeve Flange to Thermal Sleeve Weld at RPV (225 Az)	XI-BN-14 3/9/2003	N/A N/A	BL	EVT-1	20%	NRI		GE-VT-204V6
Li2/45-12 N17D LPCI Coupling Sleeve Flange to Thermal Sleeve Weld at RPV (315 Az)	XI-BN-14 3/9/2003	N/A N/A	BL	EVT-1	20%	NRI		GE-VT-204V6

Limerick ISI Component Inspection Results Listing
Unit 2

Interval: 2
Period: 1
Outage: 2R07

Component ID Description	Iso Number Insp. Date	Sect. XI Cat. Item	Inspection Reason(s)	Actual Exam	Coverage	Results	Summary Number	Procedure(s) Comments
LI2/CR/FS/GT-ARPIN-1 06-19 Fuel Support and Guide Tube Alignment Pin to Core Plate Weld, and Pin	XI-BN-07-4 3/8/2003	B-N-2 B13.40	BL	VT-3	100%	NRI		GE-VT-204V6
LI2/CR/FS/GT-ARPIN-1 06-43 Fuel Support and Guide Tube Alignment Pin to Core Plate Weld, and Pin	XI-BN-07-4 3/9/2003	B-N-2 B13.40	BL	VT-3	100%	NRI		GE-VT-204V6
LI2/CR/FS/GT-ARPIN-1 18-43 Fuel Support and Guide Tube Alignment Pin to Core Plate Weld, and Pin	XI-BN-07-4 3/9/2003	B-N-2 B13.40	BL	VT-3	100%	NRI		GE-VT-204V6
LI2/CR/FS/GT-ARPIN-1 22-31 Fuel Support and Guide Tube Alignment Pin to Core Plate Weld, and Pin	XI-BN-07-4 3/8/2003	B-N-2 B13.40	BL	VT-3	100%	NRI		GE-VT-204V6
LI2/CR/FS/GT-ARPIN-1 30-23 Fuel Support and Guide Tube Alignment Pin to Core Plate Weld, and Pin	XI-BN-07-4 3/8/2003	B-N-2 B13.40	BL	VT-3	100%	NRI		GE-VT-204V6
LI2/CR/FS/GT-ARPIN-1 30-39 Fuel Support and Guide Tube Alignment Pin to Core Plate Weld, and Pin	XI-BN-07-4 3/9/2003	B-N-2 B13.40	BL	VT-3	100%	NRI		GE-VT-204V6
LI2/CR/FS/GT-ARPIN-1 38-31 Fuel Support and Guide Tube Alignment Pin to Core Plate Weld, and Pin	XI-BN-07-4 3/8/2003	B-N-2 B13.40	BL	VT-3	100%	NRI		GE-VT-204V6
LI2/CR/FS/GT-ARPIN-1 42-19 Fuel Support and Guide Tube Alignment Pin to Core Plate Weld, and Pin	XI-BN-07-4 3/9/2003	B-N-2 B13.40	BL	VT-3	100%	NRI		GE-VT-204V6
LI2/CR/FS/GT-ARPIN-1 42-43 Fuel Support and Guide Tube Alignment Pin to Core Plate Weld, and Pin	XI-BN-07-4 3/8/2003	B-N-2 B13.40	BL	VT-3	100%	NRI		GE-VT-204V6
LI2/CR/FS/GT-ARPIN-1 54-43 Fuel Support and Guide Tube Alignment Pin to Core Plate Weld, and Pin	XI-BN-07-4 3/9/2003	B-N-2 B13.40	BL	VT-3	100%	NRI		GE-VT-204V6

Limerick ISI Component Inspection Results Listing

Unit 2

Interval: 2
Period: 1
Outage: 2R07

Component ID Description	Iso Number Insp. Date	Sect. XI Cat. Item	Inspection Reason(s)	Actual Exam	Coverage	Results	Summary Number	Procedure(s) Comments
Li2/CRGT-1 06-19 Control Rod Drive Guide Tube Sleeve to Alignment Lug Weld	XI-BN-07-4 3/8/2003	B-N-2 B13.40	BL	VT-3	100%	NRI		GE-VT-204V6
Li2/CRGT-1 06-43 Control Rod Drive Guide Tube Sleeve to Alignment Lug Weld	XI-BN-07-4 3/9/2003	B-N-2 B13.40	BL	VT-3	100%	NRI		GE-VT-204V6
Li2/CRGT-1 18-43 Control Rod Drive Guide Tube Sleeve to Alignment Lug Weld	XI-BN-07-4 3/9/2003	B-N-2 B13.40	BL	VT-3	100%	NRI		GE-VT-204V6
Li2/CRGT-1 22-31 Control Rod Drive Guide Tube Sleeve to Alignment Lug Weld	XI-BN-07-4 3/8/2003	B-N-2 B13.40	BL	VT-3	100%	NRI		GE-VT-204V6
Li2/CRGT-1 30-23 Control Rod Drive Guide Tube Sleeve to Alignment Lug Weld	XI-BN-07-4 3/8/2003	B-N-2 B13.40	BL	VT-3	100%	NRI		GE-VT-204V6
Li2/CRGT-1 30-39 Control Rod Drive Guide Tube Sleeve to Alignment Lug Weld	XI-BN-07-4 3/9/2003	B-N-2 B13.40	BL	VT-3	100%	NRI		GE-VT-204V6
Li2/CRGT-1 38-31 Control Rod Drive Guide Tube Sleeve to Alignment Lug Weld	XI-BN-07-4 3/8/2003	B-N-2 B13.40	BL	VT-3	100%	NRI		GE-VT-204V6
Li2/CRGT-1 42-19 Control Rod Drive Guide Tube Sleeve to Alignment Lug Weld	XI-BN-07-4 3/8/2003	B-N-2 B13.40	BL	VT-3	100%	NRI		GE-VT-204V6
Li2/CRGT-1 42-43 Control Rod Drive Guide Tube Sleeve to Alignment Lug Weld	XI-BN-07-4 3/9/2003	B-N-2 B13.40	BL	VT-3	100%	NRI		GE-VT-204V6
Li2/CRGT-1 54-43 Control Rod Drive Guide Tube Sleeve to Alignment Lug Weld	XI-BN-07-4 3/9/2003	B-N-2 B13.40	BL	VT-3	100%	NRI		GE-VT-204V6
Li2/CRGT-2 06-19 Control Rod Drive Guide Tube Body to Sleeve Weld	XI-BN-07-4 3/8/2003	B-N-2 B13.40	BL	EVT-1	100%	NRI		GE-VT-204V6
Li2/CRGT-2 06-43 Control Rod Drive Guide Tube Body to Sleeve Weld	XI-BN-07-4 3/9/2003	B-N-2 B13.40	BL	EVT-1	100%	NRI		GE-VT-204V6
Li2/CRGT-2 18-43 Control Rod Drive Guide Tube Body to Sleeve Weld	XI-BN-07-4 3/9/2003	B-N-2 B13.40	BL	EVT-1	100%	NRI		GE-VT-204V6

Limerick ISI Component Inspection Results Listing

Unit 2

Interval: 2
Period: 1
Outage: 2R07

Component ID Description	Iso Number Insp. Date	Sect. XI Cat. Item	Inspection Reason(s)	Actual Exam	Coverage	Results	Summary Number	Procedure(s) Comments
Li2/CRGT-2 22-31 Control Rod Drive Guide Tube Body to Sleeve Weld	XI-BN-07-4 3/8/2003	B-N-2 B13.40	BL	EVT-1	100%	NRI		GE-VT-204V6
Li2/CRGT-2 30-23 Control Rod Drive Guide Tube Body to Sleeve Weld	XI-BN-07-4 3/8/2003	B-N-2 B13.40	BL	EVT-1	100%	NRI		GE-VT-204V6
Li2/CRGT-2 30-39 Control Rod Drive Guide Tube Body to Sleeve Weld	XI-BN-07-4 3/9/2003	B-N-2 B13.40	BL	EVT-1	100%	NRI		GE-VT-204V6
Li2/CRGT-2 38-31 Control Rod Drive Guide Tube Body to Sleeve Weld	XI-BN-07-4 3/8/2003	B-N-2 B13.40	BL	EVT-1	100%	NRI		GE-VT-204V6
Li2/CRGT-2 42-19 Control Rod Drive Guide Tube Body to Sleeve Weld	XI-BN-07-4 3/9/2003	B-N-2 B13.40	BL	EVT-1	100%	NRI		GE-VT-204V6
Li2/CRGT-2 42-43 Control Rod Drive Guide Tube Body to Sleeve Weld	XI-BN-07-4 3/9/2003	B-N-2 B13.40	BL	EVT-1	100%	NRI		GE-VT-204V6
Li2/CRGT-2 54-43 Control Rod Drive Guide Tube Body to Sleeve Weld	XI-BN-07-4 3/9/2003	B-N-2 B13.40	BL	EVT-1	100%	NRI		GE-VT-204V6
Li2/CRGT-3 06-19 Control Rod Drive Guide Tube Base to Body Weld	XI-BN-07-4 3/8/2003	B-N-2 B13.40	BL	EVT-1	100%	NRI		GE-VT-204V6
Li2/CRGT-3 06-43 Control Rod Drive Guide Tube Base to Body Weld	XI-BN-07-4 3/9/2003	B-N-2 B13.40	BL	EVT-1	100%	NRI		GE-VT-204V6
Li2/CRGT-3 18-43 Control Rod Drive Guide Tube Base to Body Weld	XI-BN-07-4 3/9/2003	B-N-2 B13.40	BL	EVT-1	100%	NRI		GE-VT-204V6
Li2/CRGT-3 22-31 Control Rod Drive Guide Tube Base to Body Weld	XI-BN-07-4 3/8/2003	B-N-2 B13.40	BL	EVT-1	100%	NRI		GE-VT-204V6
Li2/CRGT-3 30-23 Control Rod Drive Guide Tube Base to Body Weld	XI-BN-07-4 3/8/2003	B-N-2 B13.40	BL	EVT-1	100%	NRI		GE-VT-204V6
Li2/CRGT-3 30-39 Control Rod Drive Guide Tube Base to Body Weld	XI-BN-07-4 3/9/2003	B-N-2 B13.40	BL	EVT-1	100%	NRI		GE-VT-204V6
Li2/CRGT-3 38-31 Control Rod Drive Guide Tube Base to Body Weld	XI-BN-07-4 3/8/2003	B-N-2 B13.40	BL	EVT-1	100%	NRI		GE-VT-204V6
Li2/CRGT-3 42-19 Control Rod Drive Guide Tube Base to Body Weld	XI-BN-07-4 3/8/2003	B-N-2 B13.40	BL	EVT-1	100%	NRI		GE-VT-204V6

Limerick ISI Component Inspection Results Listing

Unit 2

Interval: 2
Period: 1
Outage: 2R07

Component ID Description	Iso Number Insp. Date	Sect. XI Cat. Item	Inspection Reason(s)	Actual Exam	Coverage	Results	Summary Number	Procedure(s) Comments
Li2/CRGT-3 42-43 Control Rod Drive Guide Tube Base to Body Weld	XI-BN-07-4 3/9/2003	B-N-2 B13.40	BL	EVT-1	100%	NRI		GE-VT-204V6
Li2/CRGT-3 54-43 Control Rod Drive Guide Tube Base to Body Weld	XI-BN-07-4 3/9/2003	B-N-2 B13.40	BL	EVT-1	100%	NRI		GE-VT-204V6
Li2/JP01-02 RBSP Jet Pump Nos. 01 and 02 Riser Brace Support Pad Welds to RPV (2 Weld Buildup Locations 23 and 38 Az)	XI-BNN 3/9/2003	B-N-2 B13.20	BL	EVT-1	100%	NRI		GE-VT-204V6
Li2/JP03-04 RBSP Jet Pump Nos. 03 and 04 Riser Brace Support Pad Welds to RPV (2 Weld Buildup Locations 53 and 67 Az)	XI-BNN 3/7/2003	B-N-2 B13.20	BL	EVT-1	100%	NRI		GE-VT-204V6
Li2/JP05-06 RBSP Jet Pump Nos. 05 and 06 Riser Brace Support Pad Welds to RPV (2 Weld Buildup Locations 83 and 97 Az)	XI-BNN 3/9/2003	B-N-2 B13.20	BL	EVT-1	100%	NRI		GE-VT-204V6
Li2/JP11-12 RBSP Jet Pump Nos. 11 and 12 Riser Brace Support Pad Welds to RPV (2 Weld Buildup Locations 203 and 217 Az)	XI-BNN 3/10/2003	B-N-2 B13.20	BL	EVT-1	100%	NRI		GE-VT-204V6
Li2/JP13-14 RBSP Jet Pump Nos. 13 and 14 Riser Brace Support Pad Welds to RPV (2 Weld Buildup Locations 233 and 248 Az)	XI-BNN 3/9/2003	B-N-2 B13.20	BL	EVT-1	100%	NRI		GE-VT-204V6
Li2/SSB 030 Deg Lower Surveillance Specimen Bracket Attachment Weld to RPV	XI-BNN 3/9/2003	B-N-2 B13.20	AUG	VT-1	75%	NRI		GE-VT-204V6
Li2/SSB 030 Deg Upper Surveillance Specimen Bracket Attachment Weld to RPV	XI-BNN 3/9/2003	B-N-2 B13.20	AUG	VT-1	50%	NRI		GE-VT-204V6
Li2/CSB 165 Az Core Spray "B and D" Header Bracket (PB4) Attachment Weld to RPV	XI-BNN 3/7/2003	B-N-2 B13.30	BL	EVT-1	100%	NRI		GE-VT-204V6

Limerick ISI Component Inspection Results Listing

Unit 2

Interval: 2
Period: 1
Outage: 2R07

Component ID Description	Iso Number Insp. Date	Sect. XI Cat. Item	Inspection Reason(s)	Actual Exam	Coverage	Results	Summary Number	Procedure(s) Comments
Li2/CSB 195 Az Core Spray "A and C" Header Bracket (PB5) Attachment Weld to RPV	XI-BNN 3/10/2003	B-N-2 B13.30	BL	EVT-1	100%	NRI		GE-VT-204V6
Li2/CSB 247.5 Az Core Spray "A and C" Header Radial Bracket (PB6) Attachment Weld to RPV	XI-BNN 3/8/2003	B-N-2 B13.30	BL	EVT-1	80%	NRI		GE-VT-204V6
Li2/FWSB 065 Az N4B Feedwater Sparger Bracket Attachment Weld to RPV	XI-BNN 3/7/2003	B-N-2 B13.30	BL	EVT-1	90%	NRI		GE-VT-204V6
Li2/FWSB 115 Az N4B Feedwater Sparger Bracket Attachment Weld to RPV	XI-BNN 3/7/2003	B-N-2 B13.30	BL	EVT-1	90%	NRI		GE-VT-204V6
Li2/SDSB 004 Az Steam Dryer Support Bracket Attachment Weld to RPV	XI-BNN 3/6/2003	B-N-2 B13.30	BL	EVT-1	100%	NRI		GE-VT-204V6
Li2/SDSB 094 Az Steam Dryer Support Bracket Attachment Weld to RPV	XI-BNN 3/7/2003	B-N-2 B13.30	BL	EVT-1	100%	NRI		GE-VT-204V6
Li2/SD Steam Dryer Assembly Welds, Surfaces & Lugs	XI-BN-01 3/7/2003	N/A N/A	RE	VT-3	100%	NRI		GE-VT-204V6
Li2/SDDC Steam Dryer Drain Channel Welds, Vertical & Horizontal	XI-BN-01 3/7/2003	N/A N/A	RE	VT-1	100%	NRI		GE-VT-204V6
Li2/SDSR Steam Dryer Support Ring	XI-BN-01 3/7/2003	N/A N/A	RE	VT-3	N/A	RI		GE-VT-204V6 Examine and Document previous indication's @ aprox. 20° Az. Previously reported indication was examined and measured at approximately 2.25".
Li2/SH/SS Shroud Head/ Steam Separator Assembly, 48 Shroud Head Bolts, Lugs, Brackets, Welds and Surfaces	XI-BN-02 3/9/2003	N/A N/A	RE	VT-3	70%	RI		GE-VT-204V6 Examined Lugs, Lifting Assembly, and 48 Shroud Head Bolts. INR-LI2-03-01 Rev. 1
Li2/SSH 030 Deg Surveillance Specimen Holder	XI-BN-12 3/9/2003	N/A N/A	RE	VT-3	100%	NRI		GE-VT-204V6

Limerick ISI Component Inspection Results Listing

Unit 2

Interval: 2
Period: 1
Outage: 2R07

Component ID Description	Iso Number Insp. Date	Sect. XI Cat. Item	Inspection Reason(s)	Actual Exam	Coverage	Results	Summary Number	Procedure(s) Comments
Li2/SSH 120 Deg	XI-BN-12	N/A	RE	VT-3	100%	NRI		GE-VT-204V6
Surveillance Specimen Holder	3/10/2003	N/A						
Li2/SSH 300 Deg	XI-BN-12	N/A	RE	VT-3	100%	NRI		GE-VT-204V6
Surveillance Specimen Holder	3/10/2003	N/A						
Li2/AHC 000 Deg	XI-BN-04	B-N-2	RE	EVT-1	100%	NRI		GE-VT-204V6
Access Hole Cover Plate and Weld to Shroud Support Plate	3/10/2003	B13.40						
Li2/AHC 180 Deg	XI-BN-04	B-N-2	RE	EVT-1	100%	NRI		GE-VT-204V6
Access Hole Cover Plate and Weld to Shroud Support Plate	3/10/2003	B13.40						

Section 2

Summary of Conditions Noted During Cycle 7 Inservice Inspection Examination and Tests April 21, 2001 to March 23, 2003

Summary of Conditions Noted During Cycle 7 Inservice Inspection Examination and Tests

As a result of the examinations performed prior to and during the LGS Unit 2, 7th Refuel Outage, 2R07, there were no reportable conditions observed. Numerous other conditions were recorded and subsequent examinations and/or evaluations determined all conditions to be acceptable.

RPV Closure Head Meridional Weld Indication Summary

Manual ultrasonic examinations from the outside surface of RPV closure head meridional welds 'DJ' and 'DH' were performed in accordance with the LGS Unit 2 ISI Program, Specification NE-027. This inspection is required for ASME Section XI.

Scanning for detection was performed in accordance with procedure GE-UT-300 Version 6. Interrogations for indication sizing were performed in accordance with procedure GE-UT-304 Version 3.

Weld DJ had 18 recordable indications. Twelve of the indications were determined to have through-wall dimension. The remaining 6 indications had no determinable through-wall component. All eighteen indications were evaluated and determined to be acceptable to the requirements of ASME Section XI, IWB-3500.

Weld DH had 2 recordable indications. Both indications were determined to have a through-wall dimension. Indication No.1 was in close proximity to the ID surface and a supplemental magnetic particle examination was performed from the near surface to ensure that the indication was not surface connected. Both indications were evaluated and determined to be acceptable to the requirements of ASME Section XI, IWB-3500.

The indications in both welds were determined to be acceptable to the ASME Code without engineering (finite element) analysis. Accordingly, there are no structural integrity issues. An ECR is not required and operability was not an issue.

Previous ultrasonic examination results were reviewed. Indications were previously recorded in the area containing these indications however, they could not be directly correlated with the current indications. Due to improvements in examination techniques this change in examination results is not considered to be indicative of changes in the condition of the weld or associated base material. The current examination techniques invoke a new standard (ASME XI, Appendix VIII) which is considered to be more critical of the examination volume. The current indications do not represent abnormal degradation of the pressure boundary.

RPV O-Ring Indication Summary

Inspection of the RPV flanges was performed in accordance with Owner Specified Criteria based on recent Industry Operating Experience. This inspection is not required for ASME or BWRVIP.

Two indications were recorded and found to meet the acceptance criteria of LGS ECR 02-00125, "Acceptance Criteria for RPV O-Rings".

A Technical Evaluation was performed per AR A1407439 Evaluation 02.

All indications were determined to be acceptable and no structural integrity issues were identified. An ECR is not required and operability was not an issue.

Summary of Conditions Noted During Cycle 7
Inservice Inspection Examination and Tests

Snubbers

Functional Testing of snubbers was performed during 2R07 in accordance with LGS Unit 2 Technical Specification 4.7.4.e. and Surveillance Test ST-1-103-300-2.

37 Mechanical snubbers (37 Plan), 17 Lisega Hydraulic snubbers (13.3% Plan), and 2 compensating struts (13.3% Plan) were selected for examination as part of the initial sample.

Of the Mechanical Snubbers tested there was one failure (DCA-204-H027, a PSA-35), All 17 Lisega Snubbers were functionally tested with no failures, and 2 Compensating struts were tested with no failures. The one Mechanical Snubber functional test failure resulted in an additional 19 snubbers being tested. There were no functional test failures in the expanded sample.

Regarding the failure of DCA-204-H027:

CR # 148064 was initiated to address the functional failure and Action Request Evaluation No. A1361523/E09 was initiated to provide the engineering evaluation required by LGS Technical Specification 4.7.4.g. The results of the engineering evaluation indicate that the piping and associated snubber were acceptable.

The pre-removal visual inspection of DCA-204-H027 revealed a cold setting of 5-9/16 inches that is 2-1/16 inches greater than the design cold setting of 3-1/2 inches. This condition has prompted the inspection of cold settings for several other snubbers connected to the same piping as DCA-204-H027 to determine the extent of condition of the piping displacement. No other snubber cold settings were found to be out-of-tolerance. Replacement of the HV-051-2F050 valves during a previous outage was determined to be the most likely cause of the snubber cold set problem.

Shroud Head Bolt Indication Summary

Augmented ISI of the shroud head bolts was performed in accordance with the LGS Unit 2 ISI Program, Specification NE-027. This inspection is not required for ASME or BWRVIP.

Ten indications were recorded and found to meet the acceptance criteria of Specification NE-027.

CR# 00148196 was initiated to document the indications, apparent cause, corrective action, and extent of condition as required per LS-AA-125.

A Technical Evaluation was performed per A/R A1407435 Evaluation 01.

All indications were found to be acceptable and no structural, bolted connection or loose parts concerns exist. An ECR is not required and operability was not an issue.

Core Shroud

During the baseline ultrasonic examination (UT) of the LGS Unit 2 core shroud, performed during 2R05, indications considered indicative of intergranular stress corrosion cracking were detected in six of the seven (7) horizontal welds (i.e. girth welds H1, H2, H3, H4, H5, and H6).

The condition of the core shroud identified during 2R05 was evaluated per NCR LG 99-01153. An updated structural margin analyses, considering additional cycles of crack growth rate and the latest USNRC approved Industry Guidelines, was performed to ensure the condition of the core shroud remained analyzed. The attached report GE-NE 0000-0006-2250-04a, Revision 0, "Structural Evaluation of Core

Summary of Conditions Noted During Cycle 7
Inservice Inspection Examination and Tests

Shroud Welds at Limerick Generating Station, Unit 2," was prepared using bounding crack growth rates approved by the USNRC in their Safety Evaluation Reports to BWRVIP-01 and BWRVIP-14. Results of the engineering analysis showed that structural integrity criteria are satisfied through Li2R10 in 2009 for all horizontal welds. Although the structural margins have been demonstrated to be maintained through Li2R10 using USNRC approved Industry Guidelines the reinspection of the LGS, Unit 2, core shroud has been scheduled for six years, Li2R08 in 2005 based on the requirements of BWRVIP-76 for acceptance by site-specific analysis.

GE Nuclear Energy

ENGINEERING & TECHNOLOGY
GE Nuclear Energy
175 Curtner Avenue, San Jose, CA 95125

GE-NE-0000-0006-2250-04a, Rev. 0
DRF 0000-0006-2250
Class II
June 2003

STRUCTURAL EVALUATION OF CORE SHROUD WELDS AT LIMERICK GENERATING STATION, UNIT 2

June 2003

Prepared for

Exelon Corp.
Limerick 2 Generating Station

GENE 0000-0006-2250-04a, Rev. 0

STRUCTURAL EVALUATION OF CORE SHROUD WELDS AT LIMERICK GENERATION STATION, UNIT 2

June 2003

Prepared by:

D. Wu

Approved by: R M Horn

R.M. Horn, Manager
Structural Mechanics & Materials

PROPRIETARY INFORMATION NOTICE

This is a non-proprietary version of the document GE-NE-0000-0006-2250-04, Rev.0, which has proprietary information deleted. The deleted information is identified by sidebars in the right margin next to the affected text, tables and figures. This paragraph has a sidebar as an example.

Stand-alone GE proprietary information is identified by sidebars in the right margin next to the affected text, tables and figures containing stand-alone proprietary information. This paragraph has a sidebar as an example. Specific information that is not so marked, when taken out of the context of this report, is not GE proprietary.

IMPORTANT NOTICE REGARDING CONTENTS OF THIS REPORT

Please Read Carefully

The only undertakings of the General Electric Company (GE) respecting information in this document are contained in the contract between Exelon Corporation and GE, No. 00055559, effective 02/07/03, as amended to the date of transmittal of this document, and nothing contained in this document shall be construed as changing the contract. The use of this information by anyone other than Exelon, or for any purpose other than that for which it is furnished by GE, is not authorized; and with respect to any unauthorized use, GE makes no representation or warranty, express or implied, and assumes no liability as to the completeness, accuracy, or usefulness of the information contained in this document, or that its use may not infringe privately owned rights.

Copyright, General Electric Company, 2003

Table of Contents

Subject **Page No.**

1. EXECUTIVE SUMMARY 1
2. INTRODUCTION & BACKGROUND 2
3. SHROUD GEOMETRY AND MATERIAL INFORMATION 2
4. FLUENCE LEVELS AT VARIOUS SHROUD WELDS 2
5. PLANT WATER CHEMISTRY 3
6. SUMMARY OF INSPECTION RESULTS 3
7. APPLIED LOADS AND STRESSES AT VARIOUS WELDS 3
   - 7.1. Dead Weight (DW) 4
   - 7.2. Differential Pressure Loads (DP_u, DP_f) 4
   - 7.3. Seismic Loads (OBE, SSE) 4
   - 7.4. Safety Relief Valve Discharge Hydrodynamic Loads (SRV, SRV_{ADS}) 4
   - 7.5. Annulus Pressurization (AP) 5
   - 7.6. Acoustic Load (AC) and Flow Induced Load (FIL) 5
   - 7.7. Fuel Lift Loads (FLL_u, FLL_f) 6
8. CALCULATED STRESSES 6
9. STRUCTURAL MARGIN EVALUATION 6
   - 9.1. Crack Growth Calculation 7
   - 9.2. Evaluation of H1 Weld 7
   - 9.3. Evaluation of H2 Weld 7
   - 9.4. Evaluation of H3 Weld 8
   - 9.5. Evaluation of H4 Weld 8
   - 9.6. Evaluation of H6 Weld 8
   - 9.7. Summary of Evaluation Results 9
10. SUMMARY AND CONCLUSIONS 9
11. REFERENCES 10

APPENDIX A – SHROUD & WELDS GEOMETRY 15
APPENDIX B– STRUCTURAL MARGIN CALCULATIONS FOR H1 17
APPENDIX C-STRUCTURAL MARGIN CALCULATIONS FOR H2 18
APPENDIX D-STRUCTURAL MARGIN CALCULATIONS FOR H3 19
APPENDIX E-STRUCTURAL MARGIN CALCULATIONS FOR H4 20
APPENDIX F- STRUCTURAL MARGIN CALCULATIONS FOR H6 21
APPENDIX G- INSPECTION RECORDS OF WELDS H1 THROUGH H7 22

Table **Page No.**

Table 1 Weld Geometries and Elevations 11
Table 2 Governing Load Combinations 12
Table 3 Calculated Membrane and Bending Stresses of Governing Load Case 13
Table 4 Calculated Safety Factor Comparison 14

Figure **Page No.**

Figure A-1: Shroud Circumferential Welds H1 Through H7 (Weld details not included) 16

1. EXECUTIVE SUMMARY

The core shroud welds at the Limerick Generating Station, Unit 2 (LG2) were inspected during the refueling outage at the end of fuel cycle 5 (1999). Intergranular stress corrosion cracking (IGSCC) was detected at several horizontal welds. The objective of this report is to document the results of the structural evaluation of the cracked shroud welds to demonstrate compliance with BWRVIP-76 [3]. Horizontal welds H1 through H7 were evaluated. The technical evaluations considered the effects of power uprate (PU). It is shown that continued operation in the 'as-is' condition can be justified for at least 3 cycles of operation (end of fuel cycle 8). Although all horizontal shroud welds have been justified for 5 cycles of continued operations (end of fuel cycle 10) based on inspection results of end of cycle 5 (1999), re-inspection of the shroud welds is recommended at the end of cycle 8. This shroud weld re-inspection interval of 6 years conservatively took into consideration the uncertainties associated with crack growth rates and possible new crack initiations.

2. INTRODUCTION & BACKGROUND

The core shroud welds at LG2 were inspected by UT during the refueling outage at the end of fuel cycle 5 (1999). Figure A-1 shows a schematic of the various horizontal welds. Elevation and inside diameter of each weld evaluated are also shown. IGSCC was detected at several horizontal welds. References 1 and 2 had provided justification for continued operation of the shroud to end of fuel cycle 7 based on evaluations of the limiting H4 weld. The objective of this report is to document the results of the structural evaluation of the cracked shroud welds H1 through H6 to demonstrate compliance with BWRVIP-76 [3]. It is shown that continued operation in the 'as-is' condition at these welds can be justified for at least 3 cycles of operation (end of fuel cycle 8).

3. SHROUD GEOMETRY AND MATERIAL INFORMATION

The shroud and horizontal welds geometry information is summarized in Figure A-1 of Appendix A. Figure A-1 shows the locations of various welds. The shroud material is SA-240 Type 304L stainless steel (S_m = 14400 psi). The shroud diameter, thickness and elevation for each of the horizontal welds are shown in Table 1. A review of the fabrication information indicates that the H7 weld was made at the LGS site, and it connected the prefabricated core shroud structure to the reactor pressure vessel.

4. FLUENCE LEVELS AT VARIOUS SHROUD WELDS

The fluence calculations for the H4 weld were reported in Reference 4. The fluence values for H3 weld were extrapolated conservatively from the H4 fluence calculations. The fluence distributions in all the quadrants are identical. For the purpose of structural margin analysis, the metal between azimuths where the fluence levels exceed $3x10^{20}$ n/cm^2 were conservatively removed (i.e., assumed to be through-wall cracks). The remaining ligaments were calculated based on crack growth rates and inspection uncertainties.

5. PLANT WATER CHEMISTRY

The Limerick Generating Station, Unit 2 (LG2), has been operating with at least 90% availability of effective Hydrogen Water Chemistry (HWC) since April 2000. The reduced flaw growth rate was used in the structural evaluations accordingly. For operating period from 5/1999 to 4/2000, Normal Water Chemistry (NWC) condition was assumed, and normal flaw growth rate was used in the calculation of shroud flaws.

6. SUMMARY OF INSPECTION RESULTS

The Ultrasonic (UT) inspection results for the various horizontal welds are documented in Reference 5. The UT inspections were conducted using the procedures outlined in Demonstration Number 16 in Reference 6.

UT measurement uncertainties associated with Demonstration Number 16 were added to the reported values of indication depths and lengths. The UT uncertainty in the depth direction was taken as 0. 131 inch. The length uncertainty was assumed as 0 degrees, that corresponds to 45° shear wave case. For flaws whose lengths were determined through more than one setting, the placement uncertainty is 0.5 degree. This value was conservatively added at the both ends of all found flaws.

7. APPLIED LOADS AND STRESSES AT VARIOUS WELDS

All applicable loads and the critical load combinations used in the evaluation were consistent with the Core Shroud Loads at Horizontal Welds H1 through H8 report [7]. The load magnitudes used have considered the impact of power uprate. The governing applicable loads and load combinations evaluated are as shown in Table 2. A brief description of the various loads is provided next.

7.1. *Dead Weight (DW)*

Dead weights were based on the input to seismic and dynamic horizontal mathematical model shown in GE drawing 794E776. These are dry metal weights and include appropriate hardware weights.

7.2. *Differential Pressure Loads (DP_u, DP_f)*

The differential pressures (Delta Ps) across the Core Plate, Top Guide, and the Shroud Head impart vertical upward loading on the horizontal shroud welds. The differential pressure values across these components are obtained from previous evaluations including power uprate evaluation performed for LG2 as indicated in GE report No.GENE-B13-02066-00-02-LT1[7]. The pressures are multiplied by the net area of resistance of the above components in order to determine the pressure loads across them in the Upset (DP_u) and and Faulted (DP_f) conditions. The welds H1 and H2 are subjected to the Shroud Head Delta P load; H3, H4, and H5 are subjected to the Delta P loads across Shroud Head and Top Guide; Welds H6 and H7 are subjected to Delta P loads across the Shroud Head, Top Guide, and the Core Plate.

7.3. *Seismic Loads (OBE, SSE)*

The upset condition Operating Basis Earthquake (OBE) loads and the faulted condition Safe Shutdown Earthquake (SSE) loads at each weld location, in the horizontal and vertical directions, were obtained from the Reference 7 analysis report. Both North-South and East-West seismic horizontal motions were considered. All seismic loads reported were generated using time history analysis and peak time history responses.

7.4. *Safety Relief Valve Discharge Hydrodynamic Loads (SRV, SRV_{ADS})*

The hydrodynamic loads induced as a result of the actuation of all Safety Relief Valves (SRV) and the loads induced by the actuation of the Safety Relief Valves associated with

the Automatic Depressurization System (SRV_{ADS}) were included in the evalution. These loads (vertical load and lateral moment) were obtained from the Reference 7 evaluation basis report. Enveloped SRV loads for symmetric and asymmetric conditions were used in the calculations. All SRV loads reported were generated using time history analysis and peak time history responses.

7.5. *Annulus Pressurization (AP)*

Due to the loss-of-coolant accident (LOCA) associated with the postulated rupture of recirculation outlet or feedwater piping in the vessel-to-shield wall annulus, an asymmetric, lateral, transient pressure load (i.e., Annulus Pressurization load, AP) is imparted on the reactor vessel. Since the main steam line is above the shield wall, AP load does not apply to main steam line break LOCA. These loads were obtained from the Reference 7 evaluation basis report. There are no vertical loads associated with AP condition. All AP loads reported were generated using time history analyses and peak time history responses.

7.6. *Acoustic Load (AC) and Flow Induced Load (FIL)*

As a result of the postulated rupture of the recirculation suction line, the shroud is subjected to asymmetric lateral load towards the break location. This lateral loading is made up of the initial acoustic phase (AC) followed by the steady state flow induced load (FIL). These two phases of the load are mutually exclusive based on the timing of their occurrence. For the purpose of the flaw evaluation, the lateral acoustic and flow induced loads on the shroud were generated at each horizontal weld location. The flow induced loads were generated using TRACG based methodology and applying the various power/flow conditions. It should be noted that since the acoustic loads are higher than AP load at certain weld locations, they were used in the load combination results shown in the Table 2.

7.7. *Fuel Lift Loads (FLL_u, FLL_f)*

Fuel lift loads (FLL) are imparted on the Core Plate and the Top Guide, which in turn result in vertical upward loads on the shroud at these component locations. The fuel lift loads documented during Reference 7 report evaluation remain bounding, and hence the FLL from the Reference 7 evaluation for the Upset (FLL_u) and Faulted (FLL_f) conditions are used in this flaw evaluation. The total fuel lift load consists of load from 4 fuel assemblies per guide tube and 185 guide tube assemblies. Further, the total fuel lift load thus calculated at top guide is added to other dynamic loads for welds H1 through H4. Similarly the total fuel lift load thus calculated at the core plate plus the guide tube together are added to the other dynamic loads for welds H5 through H8. All fuel lift loads were generated using time history analysis, and peak time history responses.

8. CALCULATED STRESSES

The vertical axial loads resulting in Primary Membrane Stresses (P_m) and the lateral moment loads resulting in Primary Bending (P_b) stresses, are considered in the evaluation at each weld loaction from H1 through H7. Table 3 shows the calculated values of P_m and P_b at the horizontal welds for various load combinations.

9. STRUCTURAL MARGIN EVALUATION

The structural margin evaluation was conducted using the guidelines provided in Reference 3. A key input in calculating the remaining ligament at a weld, is the assumed crack growth rate during the inspection interval. The crack growth calculation is described next followed by the summary of the structural evaluation results for the horizontal welds H1, H2, H3, H4 and H6. Since weld H5 had only minor flaws found and H7 has no flaw found in 1999 inspection, they were simply dispositioned to the end of cycle 10 utilizing the acceptance standard established in Table 2-1 of Reference 3.

9.1. Crack Growth Calculation

As prescribed in Reference 3 and 8, the crack growth rates used in the length direction was $5x10^{-5}$ in/hr and in the depth direction was $1.1x10^{-5}$ in/hr under Hydrogen Water Chemistry (HWC) and $2.2x10^{-5}$ in/hr under Normal Water Chemistry (NWC). In the depth direction, with 90% Hydrogen Water Chemistry (HWC) availability starting April/2000, the crack growth rate was calculated based on NWC from May/1999 to March/2000 and HWC from April/2000 onward. The planned length of operation cycle is 24 months. Assuming approximately 90% availability, 24 months translate into approximately 16,000 hours of hot operation. The assumption regarding 90% availability is based on historic data. Given the conservative nature of the evaluation, the required structural margins are expected to be maintained even with slightly higher than 90% availability during the next cycle. Only the length direction crack growth is used for areas where through-wall cracking is assumed.

9.2. Evaluation of H1 Weld

The crack depths at OD and ID were calculated using the guidance provided in Appendix I of Reference 3. All un-inspected regions were conservatively assumed to be cracked through wall. Since the fluence at this weld is calculated to be less than $3x10^{20}$ at the end of Cycle 10, only limit load evaluation using the computer program DLL [9] was conducted. The details of the structural margin calculation are included in Appendix B and the limiting case margin is shown in Table 4.

9.3. Evaluation of H2 Weld

The crack depths at OD and ID were calculated using the guidance provided in Appendix I of Reference 3. All un-inspected regions were conservatively assumed to be cracked through wall. Since the fluence at this weld is calculated to be less than $3x10^{20}$ at the end of Cycle 10, only limit load evaluation using the computer program DLL [9] was

conducted. The details of the structural margin calculation are included in Appendix C and the limiting case margin is shown in Table 4.

9.4. Evaluation of H3 Weld

The crack depths at OD and ID were calculated using the guidance provided in Appendix I of Reference 3. All un-inspected regions were conservatively assumed to be cracked through wall. The fluence level at H3 weld was extrapolated from the fluence distribution at H4 weld reported in Reference 4. As per the guidance provided in Appendix D (Paragraph D.1.1) of Reference 3, through-wall crack depth was assumed in regions where the calculated fluence exceeded $3x10^{20}$ n/cm^2 at the end of Cycle 10. This obviates the need for linear elastic fracture mechanics evaluation. Therefore, only the limit load evaluation was conducted using the computer program DLL. The details of the structural margin calculation are included in Appendix D and the limiting case margin is shown in Table 4.

9.5. Evaluation of H4 Weld

The crack depths at OD (look-up and look-down) and ID (look-up and look-down) were calculated using the guidance provided in Appendix I of Reference 3. All un-inspected regions were conservatively assumed to be cracked through wall. As per the guidance provided in Appendix D (Paragraph D.1.1) of Reference 3, through-wall crack depth was assumed in regions where the calculated fluence exceeded $3x10^{20}$ n/cm^2 at the end of Cycle 10. This obviates the need for linear elastic fracture mechanics evaluation. Therefore, only the limit load evaluation was conducted using the computer program DLL. The details of the structural margin calculation are included in Appendix E and the limiting case margin is shown in Table 4.

9.6. Evaluation of H6 Weld

The crack depths at OD and ID were calculated using the guidance provided in Appendix I of Reference 3. All un-inspected regions were conservatively assumed to be cracked through wall. Since the fluence at this weld is calculated to be less than $3x10^{20}$ at the end of Cycle 10, only limit load evaluation using the computer program DLL was conducted.

The details of the structural margin calculation are included in Appendix F and the limiting case margin is shown in Table 4.

9.7. Summary of Evaluation Results

The calculated values of structural safety factors at the H1, H2, H3, H4 and H6 welds for the limiting operating condition are summarized in Table 4. A comparison with the required values indicates that all of the calculated safety factor values exceed the required values. Based on this it is concluded that the required safety margins at the H1, H2, H3, H4 and H6 welds are maintained in the 'as is' condition to the end of Cycle 10. However, the recommended re-inspection interval for the welds that were qualified by plant specific analyses (H1 through H4 and H6) is 6 years to end of cycle 8, taking into account of the uncertainties of possible new crack initiation and crack growth.

10. SUMMARY AND CONCLUSIONS

The core shroud welds at the LG2 were inspected during the refueling outage at the end of Fuel Cycle 5 (1999). This report documents the results of the structural evaluation of the cracked shroud welds to demonstrate compliance with BWRVIP-76 [3]. Specifically, horizontal welds H1, H2, H3, H4 and H6 were evaluated. H5 and H7 were simply dispositioned using guidelines provided in Table 2-1 of Reference 3. The technical evaluations considered the effects of power uprate (PU). It is shown that continued operation in the 'as-is' condition at these welds is technically justified for at least 3 cycles of operation (end of Fuel Cycle 8) assuming normal water chemistry operation until April of 2000, and effective hydrogen water chemistry operation from then on.

11. REFERENCES

1. GENE-B13-02080-00-03, August 2000, "The Evaluation of Limerick Unit 2 Shroud H4 Cracking for Two Fuel Cycles of Operation".
2. GENE-B13-02080-00-03 LTR1, February 2001, "Justification for Continued Operation of Limerick Unit 2 Through RF07".
3. "BWR Vessel and Internals Project: BWR Core Shroud Inspection and Flaw Evaluation Guidelines (BWRVIP-76)," EPRI Report No. TR-114232, November 1999.
4. GENE-B11-00842-00-01, July 2001, "Limerick/Peach Bottom Neutron Flux Evaluation."
5. GENE Report No. 1H61R, Revision 0, May 1999, "Limerick Generating Station – Unit 2, Core Shroud Ultrasonic Examination."
6. "BWR Vessel and Internals Project, Reactor Pressure Vessel and Internals Examination Guidelines," (BWRVIP-03), Revision 3, December 2000.
7. GENE-B13-02066-00-02-LT1, September 2000, "Core Shroud Loads at Horizontal Welds H1 through H8."
8. "BWR Vessel and Internals Project, Reactor Pressure Vessel and Internals Examination Guidelines," (BWRVIP-14), EPRI Report No. TR-105873, March 1996.
9. "BWR Core Shroud Distributed Ligament Length (DLL) computer Program (Version 2.1)", (BWRVIP-20), EPRI Report No. TR-107283, December 1996.

Table 1 Weld Geometries and Elevations

Weld	ID	Wall Thickness at Weld Location	Elevation from Vessel Zero
	in.	in.	in.
H1	216	2.0	398.00
H2	216	2.0	362.375
H3	203.125	2.0	359.875
H4	203.125	2.0	299.125
H5	203.125	2.0	191.125
H6	196.75	2.0	186.875
H7	196.75	2.0	131.50

Table 2 Governing Load Combinations

Servic Level	Service Condition	Load Combination
B	Upset	$NL + DP_U + OBE + SRV + FLL_{U,vertical}$
C	Emergency	$NL + DP_U + LOCA + SRV + FLL_{U,vertical}$
D	Faulted	$DW + DP_U + SSE + AP$

NL = Normal Load
DP_U = Delta P - Upset
OBE = Operating Basis Earthquake
SSE = Safe Shutdown Earthquake
SRV = Safety Relief Valve Actuation (all valves) Hydrodynamic Load
DW = Dead Weight
AP = Annulus Pressurization Load (includes Jet Reaction, where applicable)
LOCA = Loss of Coolant Accident
FLL_U = Fuel Lift Load in the Upset and Faulted Conditions

Table 3 Calculated Membrane and Bending Stresses of Governing Load Case

Units: psi

Weld	Normal/Upset Condition		Emergency/Faulted Condition	
	Pm	Pb	Pm	Pb
H1	334.9	482.6	808.2	813.8
H2	334.9	651.5	808.2	1089.5
H3	356.0	753.1	858.9	1258.8
H4	356.0	1165.6	858.9	1985.9
H5	356.0	2153.9	858.9	3712.1
H6	674.7	2343.9	1203.0	4036.7
H7	674.7	2946.1	1203.0	5273.7

Table 4 Calculated Safety Factor Comparison

Weld ID	Governing Operating Condition	Required Safety Factor	Calculated Safety Factor
H1	Faulted	1.39	2.20
H2	Faulted	1.39	11.11
H3	Faulted	1.39	1.53
H4	Faulted	1.39	2.86
H6	Faulted	1.39	3.42

APPENDIX A – SHROUD & WELDS GEOMETRY

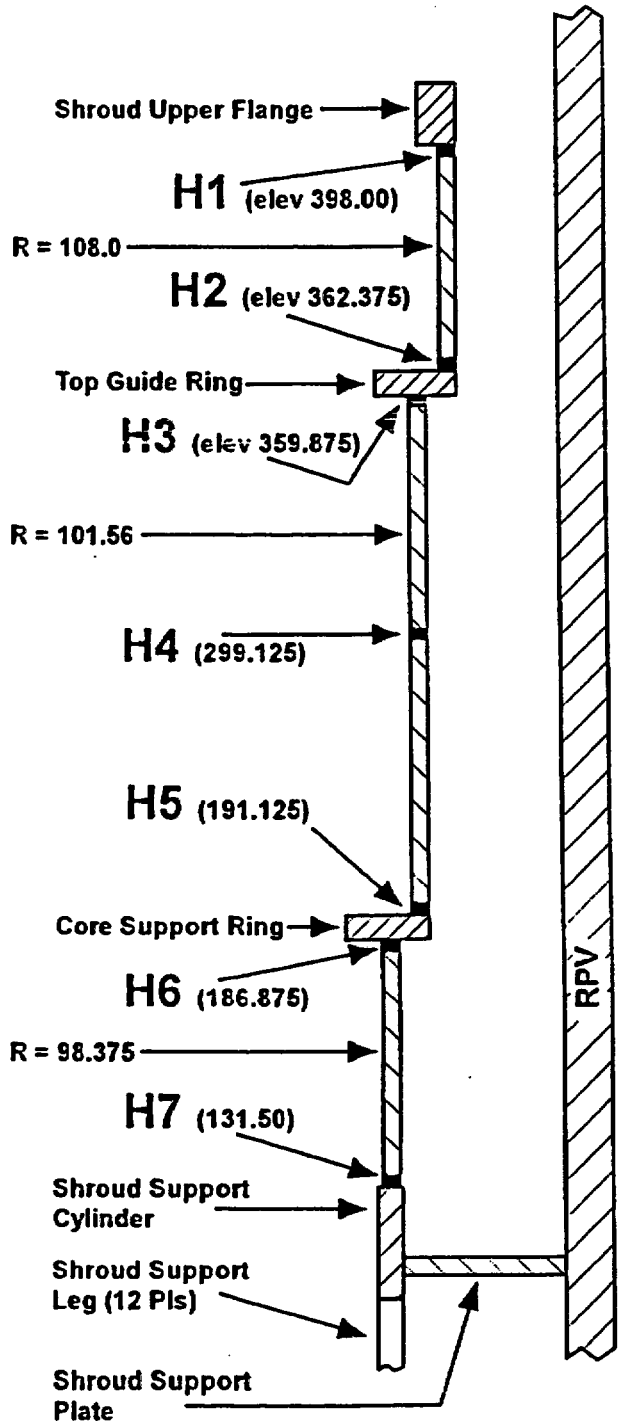

Figure A-1: Shroud Circumferential Welds H1 Through H7 (Weld details not included) – Units: inches

APPENDIX B– STRUCTURAL MARGIN CALCULATIONS FOR H1

DLL: DISTRIBUTED LIGAMENT LENGTH EVALUATION, REV. 2.1 (09/19/96)
DATE OF THIS ANALYSIS: 09/16/2002

SUMMARY OF INPUTS:
==========

Title: Limerick 2 H1 EOC10 EF LLR
Angle increment = 1.0 deg. (COARSE)
Membrane Stress, Pm = 808. psi
Bending Stress, Pb = 814. psi
Safety Factor, SF = 1.39
Mean Radius, Rm = 109.00 inches
Wall Thickness, t = 2.000 inches
Stress Intensity, Sm = 14400. psi
Fluence = 0.0E+00 n/cm^2
(Thus, LEFM evaluation not applicable)

REGION	THETA1 [deg.]	THETA2 [deg.]	THICKNESS [inches]
1	2.3	9.5	2.000
2	181.9	203.4	2.000
3	233.8	235.9	1.990
4	246.8	259.3	2.000
5	283.2	291.8	2.000

LIMIT LOAD RESULTS:
==========

NOTE: THE FOLLOWING LIMIT LOAD RESULTS ASSUME THAT
THE FLAWS TAKE COMPRESSION.

ALPHA [deg]	MOMENT [in-lbs]	Pb' [psi]	SAFETY FACTOR	RESULT
.0	1.243E+09	16645.	10.76	---->ACCEPTABLE
5.0	1.214E+09	16263.	10.52	---->ACCEPTABLE
10.0	1.182E+09	15837.	10.26	---->ACCEPTABLE
15.0	1.147E+09	15370.	9.97	---->ACCEPTABLE
20.0	1.110E+09	14867.	9.66	---->ACCEPTABLE
25.0	1.070E+09	14331.	9.33	---->ACCEPTABLE
30.0	1.028E+09	13766.	8.99	---->ACCEPTABLE
35.0	9.836E+08	13176.	8.62	---->ACCEPTABLE
40.0	9.381E+08	12566.	8.25	---->ACCEPTABLE
45.0	8.914E+08	11940.	7.86	---->ACCEPTABLE
50.0	8.438E+08	11304.	7.47	---->ACCEPTABLE
55.0	7.959E+08	10662.	7.07	---->ACCEPTABLE
60.0	7.479E+08	10018.	6.67	---->ACCEPTABLE
65.0	7.001E+08	9379.	6.28	---->ACCEPTABLE
70.0	6.198E+08	8303.	5.62	---->ACCEPTABLE
75.0	6.084E+08	8151.	5.52	---->ACCEPTABLE
80.0	5.494E+08	7359.	5.04	---->ACCEPTABLE
85.0	4.923E+08	6595.	4.56	---->ACCEPTABLE
90.0	4.890E+08	6551.	4.54	---->ACCEPTABLE
95.0	4.357E+08	5837.	4.10	---->ACCEPTABLE
100.0	3.837E+08	5140.	3.67	---->ACCEPTABLE
105.0	3.504E+08	4694.	3.39	---->ACCEPTABLE
110.0	3.362E+08	4504.	3.27	---->ACCEPTABLE

115.0	3.241E+08	4341.	3.17	---->ACCEPTABLE
120.0	2.634E+08	3529.	2.67	---->ACCEPTABLE
125.0	2.583E+08	3461.	2.63	---->ACCEPTABLE
130.0	2.417E+08	3238.	2.49	---->ACCEPTABLE
135.0	2.472E+08	3311.	2.54	---->ACCEPTABLE
140.0	2.245E+08	3008.	2.35	---->ACCEPTABLE
145.0	2.067E+08	2769.	2.20	---->ACCEPTABLE
150.0	2.448E+08	3279.	2.52	---->ACCEPTABLE
155.0	2.355E+08	3154.	2.44	---->ACCEPTABLE
160.0	2.635E+08	3530.	2.67	---->ACCEPTABLE
165.0	2.599E+08	3482.	2.64	---->ACCEPTABLE
170.0	2.757E+08	3694.	2.78	---->ACCEPTABLE
175.0	2.940E+08	3938.	2.93	---->ACCEPTABLE
180.0	2.825E+08	3784.	2.83	---->ACCEPTABLE
185.0	3.633E+08	4867.	3.50	---->ACCEPTABLE
190.0	3.970E+08	5318.	3.78	---->ACCEPTABLE
195.0	4.328E+08	5797.	4.07	---->ACCEPTABLE
200.0	4.702E+08	6299.	4.38	---->ACCEPTABLE
205.0	5.091E+08	6819.	4.70	---->ACCEPTABLE
210.0	5.490E+08	7354.	5.03	---->ACCEPTABLE
215.0	5.901E+08	7905.	5.37	---->ACCEPTABLE
220.0	6.002E+08	8041.	5.46	---->ACCEPTABLE
225.0	6.799E+08	9108.	6.11	---->ACCEPTABLE
230.0	7.274E+08	9745.	6.51	---->ACCEPTABLE
235.0	7.754E+08	10387.	6.90	---->ACCEPTABLE
240.0	8.234E+08	11030.	7.30	---->ACCEPTABLE
245.0	8.711E+08	11670.	7.69	---->ACCEPTABLE
250.0	9.182E+08	12300.	8.08	---->ACCEPTABLE
255.0	9.486E+08	12707.	8.33	---->ACCEPTABLE
260.0	9.786E+08	13109.	8.58	---->ACCEPTABLE
265.0	1.041E+09	13946.	9.10	---->ACCEPTABLE
270.0	1.084E+09	14515.	9.45	---->ACCEPTABLE
275.0	1.123E+09	15041.	9.77	---->ACCEPTABLE
280.0	1.158E+09	15518.	10.07	---->ACCEPTABLE
285.0	1.190E+09	15944.	10.33	---->ACCEPTABLE
290.0	1.218E+09	16315.	10.56	---->ACCEPTABLE
295.0	1.225E+09	16412.	10.62	---->ACCEPTABLE
300.0	1.264E+09	16929.	10.94	---->ACCEPTABLE
305.0	1.300E+09	17408.	11.23	---->ACCEPTABLE
310.0	1.315E+09	17613.	11.36	---->ACCEPTABLE
315.0	1.326E+09	17764.	11.45	---->ACCEPTABLE
320.0	1.333E+09	17860.	11.51	---->ACCEPTABLE
325.0	1.336E+09	17900.	11.53	---->ACCEPTABLE
330.0	1.335E+09	17884.	11.52	---->ACCEPTABLE
335.0	1.330E+09	17811.	11.48	---->ACCEPTABLE
340.0	1.320E+09	17684.	11.40	---->ACCEPTABLE
345.0	1.307E+09	17502.	11.29	---->ACCEPTABLE
350.0	1.289E+09	17267.	11.14	---->ACCEPTABLE
355.0	1.268E+09	16980.	10.97	---->ACCEPTABLE

ACCEPTABLE! MINIMUM SAFETY FACTOR = 2.20 AT 145.0 DEGREES.

DLL: DISTRIBUTED LIGAMENT LENGTH EVALUATION, REV. 2.1 (09/19/96)
DATE OF THIS ANALYSIS: 09/16/2002

SUMMARY OF INPUTS:
==========

Title: Limerick 2 H1 EOC10 NU LLR
Angle increment = 1.0 deg. (COARSE)
Membrane Stress, Pm = 335. psi
Bending Stress, Pb = 483. psi
Safety Factor, SF = 2.77
Mean Radius, Rm = 109.00 inches
Wall Thickness, t = 2.000 inches
Stress Intensity, Sm = 14400. psi
Fluence = 0.0E+00 n/cm^2
(Thus, LEFM evaluation not applicable)

REGION	THETA1 [deg.]	THETA2 [deg.]	THICKNESS [inches]
1	2.3	9.5	2.000
2	181.9	203.4	2.000
3	233.8	235.9	1.990
4	246.8	259.3	2.000
5	283.2	291.8	2.000

LIMIT LOAD RESULTS:
==========

NOTE: THE FOLLOWING LIMIT LOAD RESULTS ASSUME THAT
THE FLAWS TAKE COMPRESSION.

ALPHA [deg]	MOMENT [in-lbs]	Pb' [psi]	SAFETY FACTOR	RESULT
.0	1.308E+09	17525.	21.83	---->ACCEPTABLE
5.0	1.280E+09	17143.	21.37	---->ACCEPTABLE
10.0	1.248E+09	16717.	20.85	---->ACCEPTABLE
15.0	1.213E+09	16251.	20.28	---->ACCEPTABLE
20.0	1.176E+09	15748.	19.66	---->ACCEPTABLE
25.0	1.136E+09	15211.	19.01	---->ACCEPTABLE
30.0	1.093E+09	14646.	18.31	---->ACCEPTABLE
35.0	1.049E+09	14056.	17.59	---->ACCEPTABLE
40.0	1.004E+09	13446.	16.85	---->ACCEPTABLE
45.0	9.571E+08	12821.	16.08	---->ACCEPTABLE
50.0	9.096E+08	12184.	15.30	---->ACCEPTABLE
55.0	8.616E+08	11542.	14.52	---->ACCEPTABLE
60.0	8.136E+08	10899.	13.73	---->ACCEPTABLE
65.0	7.659E+08	10259.	12.95	---->ACCEPTABLE
70.0	7.193E+08	9635.	12.19	---->ACCEPTABLE
75.0	6.587E+08	8824.	11.20	---->ACCEPTABLE
80.0	6.002E+08	8041.	10.24	---->ACCEPTABLE
85.0	5.949E+08	7970.	10.15	---->ACCEPTABLE
90.0	5.407E+08	7243.	9.26	---->ACCEPTABLE
95.0	4.879E+08	6536.	8.40	---->ACCEPTABLE
100.0	4.887E+08	6547.	8.41	---->ACCEPTABLE
105.0	4.553E+08	6099.	7.87	---->ACCEPTABLE
110.0	3.883E+08	5202.	6.77	---->ACCEPTABLE

115.0	3.757E+08	5033.	6.56	---->ACCEPTABLE
120.0	3.659E+08	4901.	6.40	---->ACCEPTABLE
125.0	3.260E+08	4367.	5.75	---->ACCEPTABLE
130.0	2.921E+08	3914.	5.19	---->ACCEPTABLE
135.0	3.136E+08	4202.	5.55	---->ACCEPTABLE
140.0	2.751E+08	3685.	4.91	---->ACCEPTABLE
145.0	3.087E+08	4135.	5.46	---->ACCEPTABLE
150.0	2.963E+08	3969.	5.26	---->ACCEPTABLE
155.0	3.045E+08	4079.	5.40	---->ACCEPTABLE
160.0	3.151E+08	4221.	5.57	---->ACCEPTABLE
165.0	3.287E+08	4403.	5.79	---->ACCEPTABLE
170.0	3.444E+08	4614.	6.05	---->ACCEPTABLE
175.0	3.453E+08	4626.	6.06	---->ACCEPTABLE
180.0	3.510E+08	4702.	6.16	---->ACCEPTABLE
185.0	4.144E+08	5551.	7.20	---->ACCEPTABLE
190.0	4.645E+08	6223.	8.02	---->ACCEPTABLE
195.0	5.003E+08	6702.	8.60	---->ACCEPTABLE
200.0	5.378E+08	7204.	9.22	---->ACCEPTABLE
205.0	5.766E+08	7724.	9.85	---->ACCEPTABLE
210.0	6.165E+08	8259.	10.51	---->ACCEPTABLE
215.0	6.406E+08	8581.	10.90	---->ACCEPTABLE
220.0	7.001E+08	9379.	11.87	---->ACCEPTABLE
225.0	7.129E+08	9550.	12.08	---->ACCEPTABLE
230.0	7.932E+08	10625.	13.40	---->ACCEPTABLE
235.0	8.411E+08	11267.	14.18	---->ACCEPTABLE
240.0	8.891E+08	11911.	14.97	---->ACCEPTABLE
245.0	9.369E+08	12550.	15.75	---->ACCEPTABLE
250.0	9.678E+08	12964.	16.26	---->ACCEPTABLE
255.0	9.988E+08	13380.	16.77	---->ACCEPTABLE
260.0	1.063E+09	14241.	17.82	---->ACCEPTABLE
265.0	1.109E+09	14851.	18.56	---->ACCEPTABLE
270.0	1.151E+09	15420.	19.26	---->ACCEPTABLE
275.0	1.190E+09	15946.	19.90	---->ACCEPTABLE
280.0	1.226E+09	16423.	20.49	---->ACCEPTABLE
285.0	1.258E+09	16849.	21.01	---->ACCEPTABLE
290.0	1.285E+09	17219.	21.46	---->ACCEPTABLE
295.0	1.326E+09	17759.	22.12	---->ACCEPTABLE
300.0	1.314E+09	17596.	21.92	---->ACCEPTABLE
305.0	1.365E+09	18288.	22.77	---->ACCEPTABLE
310.0	1.381E+09	18493.	23.02	---->ACCEPTABLE
315.0	1.392E+09	18644.	23.20	---->ACCEPTABLE
320.0	1.399E+09	18740.	23.32	---->ACCEPTABLE
325.0	1.402E+09	18780.	23.37	---->ACCEPTABLE
330.0	1.401E+09	18764.	23.35	---->ACCEPTABLE
335.0	1.395E+09	18692.	23.26	---->ACCEPTABLE
340.0	1.386E+09	18564.	23.10	---->ACCEPTABLE
345.0	1.372E+09	18382.	22.88	---->ACCEPTABLE
350.0	1.355E+09	18147.	22.59	---->ACCEPTABLE
355.0	1.333E+09	17861.	22.24	---->ACCEPTABLE

ACCEPTABLE! MINIMUM SAFETY FACTOR = 4.91 AT 140.0 DEGREES.

APPENDIX C-STRUCTURAL MARGIN CALCULATIONS FOR H2

DLL: DISTRIBUTED LIGAMENT LENGTH EVALUATION, REV. 2.1 (09/19/96)
DATE OF THIS ANALYSIS: 09/19/2002

SUMMARY OF INPUTS:
==========

Title: Limerick 2 H2 EOC10 EF LLR
Angle increment = 1.0 deg. (COARSE)
Membrane Stress, Pm = 808. psi
Bending Stress, Pb = 1090. psi
Safety Factor, SF = 1.39
Mean Radius, Rm = 109.00 inches
Wall Thickness, t = 2.000 inches
Stress Intensity, Sm = 14400. psi
Fluence = 0.0E+00 n/cm^2
(Thus, LEFM evaluation not applicable)

REGION	THETA1 [deg.]	THETA2 [deg.]	THICKNESS [inches]
1	.0	360.0	.540

LIMIT LOAD RESULTS:
==========

NOTE: THE FOLLOWING LIMIT LOAD RESULTS ASSUME THAT THE FLAWS TAKE COMPRESSION.

ALPHA [deg]	MOMENT [in-lbs]	Pb' [psi]	SAFETY FACTOR	RESULT
.0	1.514E+09	20282.	11.11	---->ACCEPTABLE
5.0	1.514E+09	20282.	11.11	---->ACCEPTABLE
10.0	1.514E+09	20282.	11.11	---->ACCEPTABLE
15.0	1.514E+09	20282.	11.11	---->ACCEPTABLE
20.0	1.514E+09	20282.	11.11	---->ACCEPTABLE
25.0	1.514E+09	20282.	11.11	---->ACCEPTABLE
30.0	1.514E+09	20282.	11.11	---->ACCEPTABLE
35.0	1.514E+09	20282.	11.11	---->ACCEPTABLE
40.0	1.514E+09	20282.	11.11	---->ACCEPTABLE
45.0	1.514E+09	20282.	11.11	---->ACCEPTABLE
50.0	1.514E+09	20282.	11.11	---->ACCEPTABLE
55.0	1.514E+09	20282.	11.11	---->ACCEPTABLE
60.0	1.514E+09	20282.	11.11	---->ACCEPTABLE
65.0	1.514E+09	20282.	11.11	---->ACCEPTABLE
70.0	1.514E+09	20282.	11.11	---->ACCEPTABLE
75.0	1.514E+09	20282.	11.11	---->ACCEPTABLE
80.0	1.514E+09	20282.	11.11	---->ACCEPTABLE
85.0	1.514E+09	20282.	11.11	---->ACCEPTABLE
90.0	1.514E+09	20282.	11.11	---->ACCEPTABLE
95.0	1.514E+09	20282.	11.11	---->ACCEPTABLE
100.0	1.514E+09	20282.	11.11	---->ACCEPTABLE
105.0	1.514E+09	20282.	11.11	---->ACCEPTABLE
110.0	1.514E+09	20282.	11.11	---->ACCEPTABLE
115.0	1.514E+09	20282.	11.11	---->ACCEPTABLE
120.0	1.514E+09	20282.	11.11	---->ACCEPTABLE
125.0	1.514E+09	20282.	11.11	---->ACCEPTABLE
130.0	1.514E+09	20282.	11.11	---->ACCEPTABLE

135.0	1.514E+09	20282.	11.11	---->ACCEPTABLE
140.0	1.514E+09	20282.	11.11	---->ACCEPTABLE
145.0	1.514E+09	20282.	11.11	---->ACCEPTABLE
150.0	1.514E+09	20282.	11.11	---->ACCEPTABLE
155.0	1.514E+09	20282.	11.11	---->ACCEPTABLE
160.0	1.514E+09	20282.	11.11	---->ACCEPTABLE
165.0	1.514E+09	20282.	11.11	---->ACCEPTABLE
170.0	1.514E+09	20282.	11.11	---->ACCEPTABLE
175.0	1.514E+09	20282.	11.11	---->ACCEPTABLE
180.0	1.514E+09	20282.	11.11	---->ACCEPTABLE
185.0	1.514E+09	20282.	11.11	---->ACCEPTABLE
190.0	1.514E+09	20282.	11.11	---->ACCEPTABLE
195.0	1.514E+09	20282.	11.11	---->ACCEPTABLE
200.0	1.514E+09	20282.	11.11	---->ACCEPTABLE
205.0	1.514E+09	20282.	11.11	---->ACCEPTABLE
210.0	1.514E+09	20282.	11.11	---->ACCEPTABLE
215.0	1.514E+09	20282.	11.11	---->ACCEPTABLE
220.0	1.514E+09	20282.	11.11	---->ACCEPTABLE
225.0	1.514E+09	20282.	11.11	---->ACCEPTABLE
230.0	1.514E+09	20282.	11.11	---->ACCEPTABLE
235.0	1.514E+09	20282.	11.11	---->ACCEPTABLE
240.0	1.514E+09	20282.	11.11	---->ACCEPTABLE
245.0	1.514E+09	20282.	11.11	---->ACCEPTABLE
250.0	1.514E+09	20282.	11.11	---->ACCEPTABLE
255.0	1.514E+09	20282.	11.11	---->ACCEPTABLE
260.0	1.514E+09	20282.	11.11	---->ACCEPTABLE
265.0	1.514E+09	20282.	11.11	---->ACCEPTABLE
270.0	1.514E+09	20282.	11.11	---->ACCEPTABLE
275.0	1.514E+09	20282.	11.11	---->ACCEPTABLE
280.0	1.514E+09	20282.	11.11	---->ACCEPTABLE
285.0	1.514E+09	20282.	11.11	---->ACCEPTABLE
290.0	1.514E+09	20282.	11.11	---->ACCEPTABLE
295.0	1.514E+09	20282.	11.11	---->ACCEPTABLE
300.0	1.514E+09	20282.	11.11	---->ACCEPTABLE
305.0	1.514E+09	20282.	11.11	---->ACCEPTABLE
310.0	1.514E+09	20282.	11.11	---->ACCEPTABLE
315.0	1.514E+09	20282.	11.11	---->ACCEPTABLE
320.0	1.514E+09	20282.	11.11	---->ACCEPTABLE
325.0	1.514E+09	20282.	11.11	---->ACCEPTABLE
330.0	1.514E+09	20282.	11.11	---->ACCEPTABLE
335.0	1.514E+09	20282.	11.11	---->ACCEPTABLE
340.0	1.514E+09	20282.	11.11	---->ACCEPTABLE
345.0	1.514E+09	20282.	11.11	---->ACCEPTABLE
350.0	1.514E+09	20282.	11.11	---->ACCEPTABLE
355.0	1.514E+09	20282.	11.11	---->ACCEPTABLE

ACCEPTABLE! MINIMUM SAFETY FACTOR = 11.11 AT 255.0 DEGREES.

DLL: DISTRIBUTED LIGAMENT LENGTH EVALUATION, REV. 2.1 (09/19/96)
DATE OF THIS ANALYSIS: 09/19/2002

SUMMARY OF INPUTS:
==========

Title: Limerick 2 H2 EOC10 NU LLR
Angle increment = 1.0 deg. (COARSE)
Membrane Stress, Pm = 335. psi
Bending Stress, Pb = 652. psi
Safety Factor, SF = 2.77
Mean Radius, Rm = 109.00 inches
Wall Thickness, t = 2.000 inches
Stress Intensity, Sm = 14400. psi
Fluence = 0.0E+00 n/cm^2
(Thus, LEFM evaluation not applicable)

REGION	THETA1 [deg.]	THETA2 [deg.]	THICKNESS [inches]
1	.0	360.0	.540

LIMIT LOAD RESULTS:
==========

NOTE: THE FOLLOWING LIMIT LOAD RESULTS ASSUME THAT THE FLAWS TAKE COMPRESSION.

ALPHA [deg]	MOMENT [in-lbs]	Pb' [psi]	SAFETY FACTOR	RESULT
.0	1.551E+09	20775.	21.39	---->ACCEPTABLE
5.0	1.551E+09	20775.	21.39	---->ACCEPTABLE
10.0	1.551E+09	20775.	21.39	---->ACCEPTABLE
15.0	1.551E+09	20775.	21.39	---->ACCEPTABLE
20.0	1.551E+09	20775.	21.39	---->ACCEPTABLE
25.0	1.551E+09	20775.	21.39	---->ACCEPTABLE
30.0	1.551E+09	20775.	21.39	---->ACCEPTABLE
35.0	1.551E+09	20775.	21.39	---->ACCEPTABLE
40.0	1.551E+09	20775.	21.39	---->ACCEPTABLE
45.0	1.551E+09	20775.	21.39	---->ACCEPTABLE
50.0	1.551E+09	20775.	21.39	---->ACCEPTABLE
55.0	1.551E+09	20775.	21.39	---->ACCEPTABLE
60.0	1.551E+09	20775.	21.39	---->ACCEPTABLE
65.0	1.551E+09	20775.	21.39	---->ACCEPTABLE
70.0	1.551E+09	20775.	21.39	---->ACCEPTABLE
75.0	1.551E+09	20775.	21.39	---->ACCEPTABLE
80.0	1.551E+09	20775.	21.39	---->ACCEPTABLE
85.0	1.551E+09	20775.	21.39	---->ACCEPTABLE
90.0	1.551E+09	20775.	21.39	---->ACCEPTABLE
95.0	1.551E+09	20775.	21.39	---->ACCEPTABLE
100.0	1.551E+09	20775.	21.39	---->ACCEPTABLE
105.0	1.551E+09	20775.	21.39	---->ACCEPTABLE
110.0	1.551E+09	20775.	21.39	---->ACCEPTABLE
115.0	1.551E+09	20775.	21.39	---->ACCEPTABLE
120.0	1.551E+09	20775.	21.39	---->ACCEPTABLE
125.0	1.551E+09	20775.	21.39	---->ACCEPTABLE
130.0	1.551E+09	20775.	21.39	---->ACCEPTABLE

135.0	1.551E+09	20775.	21.39	---->ACCEPTABLE
140.0	1.551E+09	20775.	21.39	---->ACCEPTABLE
145.0	1.551E+09	20775.	21.39	---->ACCEPTABLE
150.0	1.551E+09	20775.	21.39	---->ACCEPTABLE
155.0	1.551E+09	20775.	21.39	---->ACCEPTABLE
160.0	1.551E+09	20775.	21.39	---->ACCEPTABLE
165.0	1.551E+09	20775.	21.39	---->ACCEPTABLE
170.0	1.551E+09	20775.	21.39	---->ACCEPTABLE
175.0	1.551E+09	20775.	21.39	---->ACCEPTABLE
180.0	1.551E+09	20775.	21.39	---->ACCEPTABLE
185.0	1.551E+09	20775.	21.39	---->ACCEPTABLE
190.0	1.551E+09	20775.	21.39	---->ACCEPTABLE
195.0	1.551E+09	20775.	21.39	---->ACCEPTABLE
200.0	1.551E+09	20775.	21.39	---->ACCEPTABLE
205.0	1.551E+09	20775.	21.39	---->ACCEPTABLE
210.0	1.551E+09	20775.	21.39	---->ACCEPTABLE
215.0	1.551E+09	20775.	21.39	---->ACCEPTABLE
220.0	1.551E+09	20775.	21.39	---->ACCEPTABLE
225.0	1.551E+09	20775.	21.39	---->ACCEPTABLE
230.0	1.551E+09	20775.	21.39	---->ACCEPTABLE
235.0	1.551E+09	20775.	21.39	---->ACCEPTABLE
240.0	1.551E+09	20775.	21.39	---->ACCEPTABLE
245.0	1.551E+09	20775.	21.39	---->ACCEPTABLE
250.0	1.551E+09	20775.	21.39	---->ACCEPTABLE
255.0	1.551E+09	20775.	21.39	---->ACCEPTABLE
260.0	1.551E+09	20775.	21.39	---->ACCEPTABLE
265.0	1.551E+09	20775.	21.39	---->ACCEPTABLE
270.0	1.551E+09	20775.	21.39	---->ACCEPTABLE
275.0	1.551E+09	20775.	21.39	---->ACCEPTABLE
280.0	1.551E+09	20775.	21.39	---->ACCEPTABLE
285.0	1.551E+09	20775.	21.39	---->ACCEPTABLE
290.0	1.551E+09	20775.	21.39	---->ACCEPTABLE
295.0	1.551E+09	20775.	21.39	---->ACCEPTABLE
300.0	1.551E+09	20775.	21.39	---->ACCEPTABLE
305.0	1.551E+09	20775.	21.39	---->ACCEPTABLE
310.0	1.551E+09	20775.	21.39	---->ACCEPTABLE
315.0	1.551E+09	20775.	21.39	---->ACCEPTABLE
320.0	1.551E+09	20775.	21.39	---->ACCEPTABLE
325.0	1.551E+09	20775.	21.39	---->ACCEPTABLE
330.0	1.551E+09	20775.	21.39	---->ACCEPTABLE
335.0	1.551E+09	20775.	21.39	---->ACCEPTABLE
340.0	1.551E+09	20775.	21.39	---->ACCEPTABLE
345.0	1.551E+09	20775.	21.39	---->ACCEPTABLE
350.0	1.551E+09	20775.	21.39	---->ACCEPTABLE
355.0	1.551E+09	20775.	21.39	---->ACCEPTABLE

ACCEPTABLE! MINIMUM SAFETY FACTOR = 21.39 AT 255.0 DEGREES.

APPENDIX D-STRUCTURAL MARGIN CALCULATIONS FOR H3

DLL: DISTRIBUTED LIGAMENT LENGTH EVALUATION, REV. 2.1 (09/19/96)
DATE OF THIS ANALYSIS: 09/20/2002

SUMMARY OF INPUTS:
==========

Title: Limerick 2 H3 EOC10 EF LLR
Angle increment = 1.0 deg. (COARSE)
Membrane Stress, Pm = 859. psi
Bending Stress, Pb = 1259. psi
Safety Factor, SF = 1.39
Mean Radius, Rm = 102.56 inches
Wall Thickness, t = 2.000 inches
Stress Intensity, Sm = 14400. psi
Fluence = 0.0E+00 n/cm^2
(Thus, LEFM evaluation not applicable)

REGION	THETA1 [deg.]	THETA2 [deg.]	THICKNESS [inches]
1	29.5	37.8	.430
2	52.1	58.0	.430
3	85.9	94.4	.430
4	94.4	96.8	2.000
5	96.8	102.9	.560
6	120.5	122.1	1.990
7	122.1	127.4	.550
8	178.1	181.7	.650
9	181.7	183.7	1.990
10	183.7	185.4	.730
11	209.5	211.1	.490
12	264.9	288.4	.490
13	301.5	307.6	.490

LIMIT LOAD RESULTS:
==========

NOTE: THE FOLLOWING LIMIT LOAD RESULTS ASSUME THAT
THE FLAWS TAKE COMPRESSION.

ALPHA [deg]	MOMENT [in-lbs]	Pb' [psi]	SAFETY FACTOR	RESULT
.0	1.754E+08	2654.	1.66	---->ACCEPTABLE
5.0	1.917E+08	2900.	1.77	---->ACCEPTABLE
10.0	1.800E+08	2724.	1.69	---->ACCEPTABLE
15.0	1.681E+08	2543.	1.61	---->ACCEPTABLE
20.0	1.793E+08	2713.	1.69	---->ACCEPTABLE
25.0	1.614E+08	2442.	1.56	---->ACCEPTABLE
30.0	1.571E+08	2377.	1.53	---->ACCEPTABLE
35.0	1.646E+08	2490.	1.58	---->ACCEPTABLE
40.0	1.595E+08	2413.	1.54	---->ACCEPTABLE
45.0	1.734E+08	2623.	1.64	---->ACCEPTABLE
50.0	1.736E+08	2627.	1.65	---->ACCEPTABLE
55.0	1.743E+08	2638.	1.65	---->ACCEPTABLE
60.0	1.756E+08	2656.	1.66	---->ACCEPTABLE
65.0	1.773E+08	2682.	1.67	---->ACCEPTABLE
70.0	1.794E+08	2714.	1.69	---->ACCEPTABLE

75.0	1.820E+08	2753.	1.71	---->ACCEPTABLE
80.0	1.850E+08	2799.	1.73	---->ACCEPTABLE
85.0	1.723E+08	2607.	1.64	---->ACCEPTABLE
90.0	1.877E+08	2840.	1.75	---->ACCEPTABLE
95.0	1.866E+08	2823.	1.74	---->ACCEPTABLE
100.0	1.807E+08	2735.	1.70	---->ACCEPTABLE
105.0	2.054E+08	3108.	1.87	---->ACCEPTABLE
110.0	2.104E+08	3183.	1.91	---->ACCEPTABLE
115.0	2.232E+08	3378.	2.00	---->ACCEPTABLE
120.0	2.286E+08	3459.	2.04	---->ACCEPTABLE
125.0	2.340E+08	3541.	2.08	---->ACCEPTABLE
130.0	2.318E+08	3507.	2.06	---->ACCEPTABLE
135.0	2.374E+08	3591.	2.10	---->ACCEPTABLE
140.0	2.429E+08	3676.	2.14	---->ACCEPTABLE
145.0	2.484E+08	3759.	2.18	---->ACCEPTABLE
150.0	2.539E+08	3842.	2.22	---->ACCEPTABLE
155.0	2.592E+08	3922.	2.26	---->ACCEPTABLE
160.0	2.643E+08	4000.	2.29	---->ACCEPTABLE
165.0	2.693E+08	4074.	2.33	---->ACCEPTABLE
170.0	2.856E+08	4321.	2.45	---->ACCEPTABLE
175.0	2.741E+08	4147.	2.36	---->ACCEPTABLE
180.0	2.976E+08	4502.	2.53	---->ACCEPTABLE
185.0	2.659E+08	4023.	2.31	---->ACCEPTABLE
190.0	2.693E+08	4074.	2.33	---->ACCEPTABLE
195.0	2.999E+08	4538.	2.55	---->ACCEPTABLE
200.0	2.831E+08	4283.	2.43	---->ACCEPTABLE
205.0	3.050E+08	4615.	2.58	---->ACCEPTABLE
210.0	2.869E+08	4341.	2.46	---->ACCEPTABLE
215.0	2.920E+08	4418.	2.49	---->ACCEPTABLE
220.0	2.849E+08	4311.	2.44	---->ACCEPTABLE
225.0	3.011E+08	4556.	2.56	---->ACCEPTABLE
230.0	3.009E+08	4552.	2.55	---->ACCEPTABLE
235.0	3.001E+08	4541.	2.55	---->ACCEPTABLE
240.0	2.989E+08	4523.	2.54	---->ACCEPTABLE
245.0	2.972E+08	4497.	2.53	---->ACCEPTABLE
250.0	2.951E+08	4465.	2.51	---->ACCEPTABLE
255.0	2.925E+08	4426.	2.50	---->ACCEPTABLE
260.0	2.895E+08	4380.	2.47	---->ACCEPTABLE
265.0	2.861E+08	4329.	2.45	---->ACCEPTABLE
270.0	2.823E+08	4272.	2.42	---->ACCEPTABLE
275.0	2.782E+08	4210.	2.39	---->ACCEPTABLE
280.0	2.738E+08	4143.	2.36	---->ACCEPTABLE
285.0	2.691E+08	4071.	2.33	---->ACCEPTABLE
290.0	2.641E+08	3996.	2.29	---->ACCEPTABLE
295.0	2.692E+08	4073.	2.33	---->ACCEPTABLE
300.0	2.460E+08	3722.	2.16	---->ACCEPTABLE
305.0	2.440E+08	3692.	2.15	---->ACCEPTABLE
310.0	2.248E+08	3401.	2.01	---->ACCEPTABLE
315.0	2.371E+08	3588.	2.10	---->ACCEPTABLE
320.0	2.137E+08	3233.	1.93	---->ACCEPTABLE
325.0	2.116E+08	3202.	1.92	---->ACCEPTABLE
330.0	2.027E+08	3067.	1.85	---->ACCEPTABLE
335.0	2.153E+08	3257.	1.94	---->ACCEPTABLE
340.0	2.101E+08	3180.	1.91	---->ACCEPTABLE
345.0	2.052E+08	3105.	1.87	---->ACCEPTABLE
350.0	2.073E+08	3136.	1.89	---->ACCEPTABLE
355.0	1.850E+08	2800.	1.73	---->ACCEPTABLE

ACCEPTABLE! MINIMUM SAFETY FACTOR = 1.53 AT 30.0 DEGREES.

DLL: DISTRIBUTED LIGAMENT LENGTH EVALUATION, REV. 2.1 (09/19/96)
DATE OF THIS ANALYSIS: 09/20/2002

SUMMARY OF INPUTS:
==========

Title: Limerick 2 H3 EOC10 NU LLR
Angle increment = 1.0 deg. (COARSE)
Membrane Stress, Pm = 356. psi
Bending Stress, Pb = 754. psi
Safety Factor, SF = 2.77
Mean Radius, Rm = 102.56 inches
Wall Thickness, t = 2.000 inches
Stress Intensity, Sm = 14400. psi
Fluence = 0.0E+00 n/cm^2
(Thus, LEFM evaluation not applicable)

REGION	THETA1 [deg.]	THETA2 [deg.]	THICKNESS [inches]
1	29.5	37.8	.430
2	52.1	58.0	.430
3	85.9	94.4	.430
4	94.4	96.8	2.000
5	96.8	102.9	.560
6	120.5	122.1	1.990
7	122.1	127.4	.550
8	178.1	181.7	.650
9	181.7	183.7	1.990
10	183.7	185.4	.730
11	209.5	211.1	.490
12	264.9	288.4	.490
13	301.5	307.6	.490

LIMIT LOAD RESULTS:
==========

NOTE: THE FOLLOWING LIMIT LOAD RESULTS ASSUME THAT
THE FLAWS TAKE COMPRESSION.

ALPHA [deg]	MOMENT [in-lbs]	Pb' [psi]	SAFETY FACTOR	RESULT
.0	2.587E+08	3914.	3.85	---->ACCEPTABLE
5.0	2.703E+08	4090.	4.01	---->ACCEPTABLE
10.0	2.498E+08	3780.	3.73	---->ACCEPTABLE
15.0	2.398E+08	3628.	3.59	---->ACCEPTABLE
20.0	2.508E+08	3795.	3.74	---->ACCEPTABLE
25.0	2.443E+08	3696.	3.65	---->ACCEPTABLE
30.0	2.288E+08	3462.	3.44	---->ACCEPTABLE
35.0	2.276E+08	3444.	3.42	---->ACCEPTABLE
40.0	2.423E+08	3666.	3.62	---->ACCEPTABLE
45.0	2.447E+08	3703.	3.66	---->ACCEPTABLE
50.0	2.364E+08	3576.	3.54	---->ACCEPTABLE
55.0	2.371E+08	3587.	3.55	---->ACCEPTABLE
60.0	2.383E+08	3606.	3.57	---->ACCEPTABLE
65.0	2.400E+08	3631.	3.59	---->ACCEPTABLE
70.0	2.421E+08	3664.	3.62	---->ACCEPTABLE

75.0	2.447E+08	3703.	3.66	---->ACCEPTABLE
80.0	2.528E+08	3825.	3.77	---->ACCEPTABLE
85.0	2.665E+08	4033.	3.95	---->ACCEPTABLE
90.0	2.507E+08	3793.	3.74	---->ACCEPTABLE
95.0	2.548E+08	3855.	3.79	---->ACCEPTABLE
100.0	2.749E+08	4159.	4.07	---->ACCEPTABLE
105.0	2.681E+08	4057.	3.98	---->ACCEPTABLE
110.0	2.731E+08	4132.	4.04	---->ACCEPTABLE
115.0	2.860E+08	4327.	4.22	---->ACCEPTABLE
120.0	2.913E+08	4408.	4.29	---->ACCEPTABLE
125.0	2.968E+08	4490.	4.37	---->ACCEPTABLE
130.0	2.984E+08	4515.	4.39	---->ACCEPTABLE
135.0	3.001E+08	4541.	4.41	---->ACCEPTABLE
140.0	3.057E+08	4625.	4.49	---->ACCEPTABLE
145.0	3.112E+08	4709.	4.56	---->ACCEPTABLE
150.0	3.166E+08	4791.	4.64	---->ACCEPTABLE
155.0	3.219E+08	4871.	4.71	---->ACCEPTABLE
160.0	3.271E+08	4949.	4.78	---->ACCEPTABLE
165.0	3.320E+08	5024.	4.85	---->ACCEPTABLE
170.0	3.208E+08	4855.	4.69	---->ACCEPTABLE
175.0	3.447E+08	5215.	5.02	---->ACCEPTABLE
180.0	3.329E+08	5037.	4.86	---->ACCEPTABLE
185.0	3.444E+08	5211.	5.02	---->ACCEPTABLE
190.0	3.478E+08	5262.	5.06	---->ACCEPTABLE
195.0	3.705E+08	5606.	5.37	---->ACCEPTABLE
200.0	3.537E+08	5351.	5.14	---->ACCEPTABLE
205.0	3.441E+08	5207.	5.01	---->ACCEPTABLE
210.0	3.536E+08	5351.	5.14	---->ACCEPTABLE
215.0	3.549E+08	5370.	5.16	---->ACCEPTABLE
220.0	3.555E+08	5379.	5.17	---->ACCEPTABLE
225.0	3.715E+08	5622.	5.39	---->ACCEPTABLE
230.0	3.636E+08	5502.	5.28	---->ACCEPTABLE
235.0	3.629E+08	5491.	5.27	---->ACCEPTABLE
240.0	3.617E+08	5472.	5.25	---->ACCEPTABLE
245.0	3.600E+08	5447.	5.23	---->ACCEPTABLE
250.0	3.578E+08	5414.	5.20	---->ACCEPTABLE
255.0	3.552E+08	5375.	5.16	---->ACCEPTABLE
260.0	3.522E+08	5330.	5.12	---->ACCEPTABLE
265.0	3.488E+08	5278.	5.08	---->ACCEPTABLE
270.0	3.451E+08	5221.	5.02	---->ACCEPTABLE
275.0	3.410E+08	5159.	4.97	---->ACCEPTABLE
280.0	3.365E+08	5092.	4.91	---->ACCEPTABLE
285.0	3.318E+08	5021.	4.84	---->ACCEPTABLE
290.0	3.269E+08	4946.	4.78	---->ACCEPTABLE
295.0	3.387E+08	5124.	4.94	---->ACCEPTABLE
300.0	3.123E+08	4725.	4.58	---->ACCEPTABLE
305.0	3.069E+08	4643.	4.50	---->ACCEPTABLE
310.0	2.944E+08	4455.	4.33	---->ACCEPTABLE
315.0	3.134E+08	4741.	4.59	---->ACCEPTABLE
320.0	3.113E+08	4710.	4.56	---->ACCEPTABLE
325.0	3.058E+08	4627.	4.49	---->ACCEPTABLE
330.0	3.003E+08	4544.	4.41	---->ACCEPTABLE
335.0	2.848E+08	4309.	4.20	---->ACCEPTABLE
340.0	2.729E+08	4129.	4.04	---->ACCEPTABLE
345.0	2.679E+08	4054.	3.97	---->ACCEPTABLE
350.0	2.768E+08	4188.	4.09	---->ACCEPTABLE
355.0	2.547E+08	3854.	3.79	---->ACCEPTABLE

ACCEPTABLE! MINIMUM SAFETY FACTOR = 3.42 AT 35.0 DEGREES.

APPENDIX E-STRUCTURAL MARGIN CALCULATIONS FOR H4

DLL: DISTRIBUTED LIGAMENT LENGTH EVALUATION, REV. 2.1 (09/19/96)
DATE OF THIS ANALYSIS: 09/03/2002

SUMMARY OF INPUTS:
==========

Title: Limerick 2 H4 EOC10 EF LLR
Angle increment = 1.0 deg. (COARSE)
Membrane Stress, Pm = 859. psi
Bending Stress, Pb = 1986. psi
Safety Factor, SF = 1.39
Mean Radius, Rm = 102.56 inches
Wall Thickness, t = 2.000 inches
Stress Intensity, Sm = 14400. psi
Fluence = 0.0E+00 n/cm^2
(Thus, LEFM evaluation not applicable)

REGION	THETA1 [deg.]	THETA2 [deg.]	THICKNESS [inches]
1	.0	2.8	.720
2	2.8	5.1	2.000
3	5.1	11.5	.710
4	78.5	79.4	.710
5	79.4	83.9	2.000
6	83.9	101.5	.720
7	168.5	181.2	.720
8	181.2	183.3	2.000
9	183.3	191.5	.720
10	258.5	266.0	.720
11	266.0	278.0	2.000
12	278.0	281.5	.720
13	348.5	360.0	.720

LIMIT LOAD RESULTS:
==========

NOTE: THE FOLLOWING LIMIT LOAD RESULTS ASSUME THAT
THE FLAWS TAKE COMPRESSION.

ALPHA [deg]	MOMENT [in-lbs]	Pb' [psi]	SAFETY FACTOR	RESULT
.0	6.651E+08	10064.	3.84	---->ACCEPTABLE
5.0	6.292E+08	9520.	3.65	---->ACCEPTABLE
10.0	6.542E+08	9898.	3.78	---->ACCEPTABLE
15.0	6.619E+08	10015.	3.82	---->ACCEPTABLE
20.0	6.333E+08	9582.	3.67	---->ACCEPTABLE
25.0	6.402E+08	9687.	3.71	---->ACCEPTABLE
30.0	6.471E+08	9791.	3.74	---->ACCEPTABLE
35.0	6.452E+08	9762.	3.73	---->ACCEPTABLE
40.0	6.428E+08	9725.	3.72	---->ACCEPTABLE
45.0	6.398E+08	9681.	3.70	---->ACCEPTABLE
50.0	6.364E+08	9629.	3.69	---->ACCEPTABLE
55.0	6.325E+08	9571.	3.67	---->ACCEPTABLE
60.0	6.283E+08	9506.	3.64	---->ACCEPTABLE
65.0	6.155E+08	9312.	3.58	---->ACCEPTABLE
70.0	6.027E+08	9119.	3.51	---->ACCEPTABLE

75.0	6.257E+08	9468.	3.63	---->ACCEPTABLE
80.0	5.963E+08	9023.	3.47	---->ACCEPTABLE
85.0	6.192E+08	9369.	3.60	---->ACCEPTABLE
90.0	5.939E+08	8987.	3.46	---->ACCEPTABLE
95.0	6.069E+08	9183.	3.53	---->ACCEPTABLE
100.0	5.720E+08	8654.	3.34	---->ACCEPTABLE
105.0	5.729E+08	8668.	3.35	---->ACCEPTABLE
110.0	5.544E+08	8388.	3.25	---->ACCEPTABLE
115.0	5.559E+08	8411.	3.26	---->ACCEPTABLE
120.0	5.579E+08	8442.	3.27	---->ACCEPTABLE
125.0	5.518E+08	8350.	3.24	---->ACCEPTABLE
130.0	5.460E+08	8261.	3.21	---->ACCEPTABLE
135.0	5.403E+08	8176.	3.18	---->ACCEPTABLE
140.0	5.350E+08	8095.	3.15	---->ACCEPTABLE
145.0	5.299E+08	8018.	3.12	---->ACCEPTABLE
150.0	5.252E+08	7947.	3.10	---->ACCEPTABLE
155.0	5.128E+08	7760.	3.03	---->ACCEPTABLE
160.0	5.012E+08	7584.	2.97	---->ACCEPTABLE
165.0	5.298E+08	8016.	3.12	---->ACCEPTABLE
170.0	5.134E+08	7768.	3.03	---->ACCEPTABLE
175.0	4.971E+08	7521.	2.95	---->ACCEPTABLE
180.0	4.916E+08	7438.	2.92	---->ACCEPTABLE
185.0	5.041E+08	7628.	2.98	---->ACCEPTABLE
190.0	5.005E+08	7574.	2.96	---->ACCEPTABLE
195.0	5.137E+08	7772.	3.03	---->ACCEPTABLE
200.0	4.816E+08	7288.	2.86	---->ACCEPTABLE
205.0	4.968E+08	7516.	2.94	---->ACCEPTABLE
210.0	5.063E+08	7662.	2.99	---->ACCEPTABLE
215.0	5.083E+08	7690.	3.01	---->ACCEPTABLE
220.0	5.107E+08	7727.	3.02	---->ACCEPTABLE
225.0	5.136E+08	7771.	3.03	---->ACCEPTABLE
230.0	5.170E+08	7823.	3.05	---->ACCEPTABLE
235.0	5.209E+08	7882.	3.07	---->ACCEPTABLE
240.0	5.252E+08	7947.	3.10	---->ACCEPTABLE
245.0	5.218E+08	7895.	3.08	---->ACCEPTABLE
250.0	5.191E+08	7854.	3.06	---->ACCEPTABLE
255.0	5.528E+08	8365.	3.24	---->ACCEPTABLE
260.0	5.346E+08	8089.	3.15	---->ACCEPTABLE
265.0	5.427E+08	8212.	3.19	---->ACCEPTABLE
270.0	5.658E+08	8561.	3.31	---->ACCEPTABLE
275.0	5.549E+08	8397.	3.25	---->ACCEPTABLE
280.0	5.689E+08	8607.	3.33	---->ACCEPTABLE
285.0	5.824E+08	8812.	3.40	---->ACCEPTABLE
290.0	5.861E+08	8868.	3.42	---->ACCEPTABLE
295.0	5.808E+08	8788.	3.39	---->ACCEPTABLE
300.0	5.955E+08	9011.	3.47	---->ACCEPTABLE
305.0	6.016E+08	9103.	3.50	---->ACCEPTABLE
310.0	6.075E+08	9192.	3.53	---->ACCEPTABLE
315.0	6.131E+08	9277.	3.56	---->ACCEPTABLE
320.0	6.185E+08	9358.	3.59	---->ACCEPTABLE
325.0	6.235E+08	9434.	3.62	---->ACCEPTABLE
330.0	6.282E+08	9505.	3.64	---->ACCEPTABLE
335.0	6.081E+08	9201.	3.54	---->ACCEPTABLE
340.0	6.243E+08	9446.	3.62	---->ACCEPTABLE
345.0	6.566E+08	9936.	3.79	---->ACCEPTABLE
350.0	6.522E+08	9868.	3.77	---->ACCEPTABLE
355.0	6.466E+08	9784.	3.74	---->ACCEPTABLE

ACCEPTABLE! MINIMUM SAFETY FACTOR = 2.86 AT 200.0 DEGREES.

DLL: DISTRIBUTED LIGAMENT LENGTH EVALUATION, REV. 2.1 (09/19/96)
DATE OF THIS ANALYSIS: 09/03/2002

SUMMARY OF INPUTS:
==========

Title: Limerick 2 H4 EOC10 NU LLR
Angle increment = 1.0 deg. (COARSE)
Membrane Stress, Pm = 356. psi
Bending Stress, Pb = 1166. psi
Safety Factor, SF = 2.77
Mean Radius, Rm = 102.56 inches
Wall Thickness, t = 2.000 inches
Stress Intensity, Sm = 14400. psi
Fluence = 0.0E+00 n/cm^2
(Thus, LEFM evaluation not applicable)

REGION	THETA1 [deg.]	THETA2 [deg.]	THICKNESS [inches]
1	.0	2.8	.720
2	2.8	5.1	2.000
3	5.1	11.5	.710
4	78.5	79.4	.710
5	79.4	83.9	2.000
6	83.9	101.5	.720
7	168.5	181.2	.720
8	181.2	183.3	2.000
9	183.3	191.5	.720
10	258.5	266.0	.720
11	266.0	278.0	2.000
12	278.0	281.5	.720
13	348.5	360.0	.720

LIMIT LOAD RESULTS:
==========

NOTE: THE FOLLOWING LIMIT LOAD RESULTS ASSUME THAT
THE FLAWS TAKE COMPRESSION.

ALPHA [deg]	MOMENT [in-lbs]	Pb' [psi]	SAFETY FACTOR	RESULT
.0	7.265E+08	10993.	7.46	---->ACCEPTABLE
5.0	7.212E+08	10913.	7.40	---->ACCEPTABLE
10.0	6.901E+08	10442.	7.09	---->ACCEPTABLE
15.0	6.977E+08	10556.	7.17	---->ACCEPTABLE
20.0	7.046E+08	10662.	7.24	---->ACCEPTABLE
25.0	7.112E+08	10761.	7.30	---->ACCEPTABLE
30.0	7.176E+08	10858.	7.37	---->ACCEPTABLE
35.0	7.050E+08	10667.	7.24	---->ACCEPTABLE
40.0	7.026E+08	10630.	7.22	---->ACCEPTABLE
45.0	6.996E+08	10586.	7.19	---->ACCEPTABLE
50.0	6.962E+08	10534.	7.16	---->ACCEPTABLE
55.0	6.923E+08	10476.	7.12	---->ACCEPTABLE
60.0	6.989E+08	10574.	7.18	---->ACCEPTABLE
65.0	6.865E+08	10387.	7.06	---->ACCEPTABLE
70.0	6.741E+08	10200.	6.94	---->ACCEPTABLE

75.0	6.713E+08	10157.	6.91	---->ACCEPTABLE
80.0	6.685E+08	10115.	6.88	---->ACCEPTABLE
85.0	6.554E+08	9916.	6.75	---->ACCEPTABLE
90.0	6.553E+08	9916.	6.75	---->ACCEPTABLE
95.0	6.431E+08	9730.	6.63	---->ACCEPTABLE
100.0	6.441E+08	9745.	6.64	---->ACCEPTABLE
105.0	6.446E+08	9754.	6.64	---->ACCEPTABLE
110.0	6.451E+08	9760.	6.65	---->ACCEPTABLE
115.0	6.268E+08	9485.	6.47	---->ACCEPTABLE
120.0	6.284E+08	9509.	6.48	---->ACCEPTABLE
125.0	6.116E+08	9255.	6.31	---->ACCEPTABLE
130.0	6.058E+08	9166.	6.26	---->ACCEPTABLE
135.0	6.001E+08	9081.	6.20	---->ACCEPTABLE
140.0	5.948E+08	8999.	6.15	---->ACCEPTABLE
145.0	5.897E+08	8923.	6.10	---->ACCEPTABLE
150.0	5.958E+08	9016.	6.16	---->ACCEPTABLE
155.0	5.839E+08	8834.	6.04	---->ACCEPTABLE
160.0	5.921E+08	8958.	6.12	---->ACCEPTABLE
165.0	5.755E+08	8709.	5.96	---->ACCEPTABLE
170.0	5.596E+08	8467.	5.80	---->ACCEPTABLE
175.0	5.801E+08	8778.	6.00	---->ACCEPTABLE
180.0	5.649E+08	8548.	5.85	---->ACCEPTABLE
185.0	5.772E+08	8734.	5.97	---->ACCEPTABLE
190.0	5.832E+08	8824.	6.03	---->ACCEPTABLE
195.0	5.596E+08	8467.	5.80	---->ACCEPTABLE
200.0	5.728E+08	8667.	5.93	---->ACCEPTABLE
205.0	5.420E+08	8200.	5.62	---->ACCEPTABLE
210.0	5.769E+08	8729.	5.97	---->ACCEPTABLE
215.0	5.681E+08	8595.	5.88	---->ACCEPTABLE
220.0	5.705E+08	8632.	5.91	---->ACCEPTABLE
225.0	5.734E+08	8676.	5.93	---->ACCEPTABLE
230.0	5.768E+08	8728.	5.97	---->ACCEPTABLE
235.0	5.807E+08	8786.	6.01	---->ACCEPTABLE
240.0	5.958E+08	9015.	6.16	---->ACCEPTABLE
245.0	5.928E+08	8969.	6.13	---->ACCEPTABLE
250.0	5.905E+08	8934.	6.10	---->ACCEPTABLE
255.0	5.886E+08	8907.	6.09	---->ACCEPTABLE
260.0	6.165E+08	9329.	6.36	---->ACCEPTABLE
265.0	6.151E+08	9306.	6.35	---->ACCEPTABLE
270.0	6.272E+08	9490.	6.47	---->ACCEPTABLE
275.0	6.274E+08	9493.	6.47	---->ACCEPTABLE
280.0	6.410E+08	9699.	6.61	---->ACCEPTABLE
285.0	6.542E+08	9898.	6.74	---->ACCEPTABLE
290.0	6.315E+08	9555.	6.51	---->ACCEPTABLE
295.0	6.516E+08	9860.	6.71	---->ACCEPTABLE
300.0	6.659E+08	10076.	6.85	---->ACCEPTABLE
305.0	6.614E+08	10008.	6.81	---->ACCEPTABLE
310.0	6.673E+08	10096.	6.87	---->ACCEPTABLE
315.0	6.729E+08	10182.	6.92	---->ACCEPTABLE
320.0	6.783E+08	10263.	6.98	---->ACCEPTABLE
325.0	6.833E+08	10339.	7.03	---->ACCEPTABLE
330.0	6.635E+08	10040.	6.83	---->ACCEPTABLE
335.0	6.990E+08	10576.	7.18	---->ACCEPTABLE
340.0	6.961E+08	10533.	7.15	---->ACCEPTABLE
345.0	6.926E+08	10480.	7.12	---->ACCEPTABLE
350.0	7.243E+08	10960.	7.43	---->ACCEPTABLE
355.0	7.191E+08	10881.	7.38	---->ACCEPTABLE

ACCEPTABLE! MINIMUM SAFETY FACTOR = 5.62 AT 205.0 DEGREES.

APPENDIX F- STRUCTURAL MARGIN CALCULATIONS FOR H6

DLL: DISTRIBUTED LIGAMENT LENGTH EVALUATION, REV. 2.1 (09/19/96)
DATE OF THIS ANALYSIS: 08/15/2002

SUMMARY OF INPUTS:
==========

Title: LG2 H6 EF DLL RUN
Angle increment = 1.0 deg. (COARSE)
Membrane Stress, Pm = 1203. psi
Bending Stress, Pb = 4037. psi
Safety Factor, SF = 1.39
Mean Radius, Rm = 99.38 inches
Wall Thickness, t = 2.000 inches
Stress Intensity, Sm = 14400. psi
Fluence = 0.0E+00 n/cm^2
(Thus, LEFM evaluation not applicable)

REGION	THETA1 [deg.]	THETA2 [deg.]	THICKNESS [inches]
1	.0	360.0	.470

LIMIT LOAD RESULTS:
==========

NOTE: THE FOLLOWING LIMIT LOAD RESULTS ASSUME THAT THE FLAWS TAKE COMPRESSION.

ALPHA [deg]	MOMENT [in-lbs]	Pb' [psi]	SAFETY FACTOR	RESULT
.0	1.038E+09	16725.	3.42	---->ACCEPTABLE
5.0	1.038E+09	16725.	3.42	---->ACCEPTABLE
10.0	1.038E+09	16725.	3.42	---->ACCEPTABLE
15.0	1.038E+09	16725.	3.42	---->ACCEPTABLE
20.0	1.038E+09	16725.	3.42	---->ACCEPTABLE
25.0	1.038E+09	16725.	3.42	---->ACCEPTABLE
30.0	1.038E+09	16725.	3.42	---->ACCEPTABLE
35.0	1.038E+09	16725.	3.42	---->ACCEPTABLE
40.0	1.038E+09	16725.	3.42	---->ACCEPTABLE
45.0	1.038E+09	16725.	3.42	---->ACCEPTABLE
50.0	1.038E+09	16725.	3.42	---->ACCEPTABLE
55.0	1.038E+09	16725.	3.42	---->ACCEPTABLE
60.0	1.038E+09	16725.	3.42	---->ACCEPTABLE
65.0	1.038E+09	16725.	3.42	---->ACCEPTABLE
70.0	1.038E+09	16725.	3.42	---->ACCEPTABLE
75.0	1.038E+09	16725.	3.42	---->ACCEPTABLE
80.0	1.038E+09	16725.	3.42	---->ACCEPTABLE
85.0	1.038E+09	16725.	3.42	---->ACCEPTABLE
90.0	1.038E+09	16725.	3.42	---->ACCEPTABLE
95.0	1.038E+09	16725.	3.42	---->ACCEPTABLE
100.0	1.038E+09	16725.	3.42	---->ACCEPTABLE
105.0	1.038E+09	16725.	3.42	---->ACCEPTABLE
110.0	1.038E+09	16725.	3.42	---->ACCEPTABLE
115.0	1.038E+09	16725.	3.42	---->ACCEPTABLE
120.0	1.038E+09	16725.	3.42	---->ACCEPTABLE
125.0	1.038E+09	16725.	3.42	---->ACCEPTABLE
130.0	1.038E+09	16725.	3.42	---->ACCEPTABLE

135.0	1.038E+09	16725.	3.42	---->ACCEPTABLE
140.0	1.038E+09	16725.	3.42	---->ACCEPTABLE
145.0	1.038E+09	16725.	3.42	---->ACCEPTABLE
150.0	1.038E+09	16725.	3.42	---->ACCEPTABLE
155.0	1.038E+09	16725.	3.42	---->ACCEPTABLE
160.0	1.038E+09	16725.	3.42	---->ACCEPTABLE
165.0	1.038E+09	16725.	3.42	---->ACCEPTABLE
170.0	1.038E+09	16725.	3.42	---->ACCEPTABLE
175.0	1.038E+09	16725.	3.42	---->ACCEPTABLE
180.0	1.038E+09	16725.	3.42	---->ACCEPTABLE
185.0	1.038E+09	16725.	3.42	---->ACCEPTABLE
190.0	1.038E+09	16725.	3.42	---->ACCEPTABLE
195.0	1.038E+09	16725.	3.42	---->ACCEPTABLE
200.0	1.038E+09	16725.	3.42	---->ACCEPTABLE
205.0	1.038E+09	16725.	3.42	---->ACCEPTABLE
210.0	1.038E+09	16725.	3.42	---->ACCEPTABLE
215.0	1.038E+09	16725.	3.42	---->ACCEPTABLE
220.0	1.038E+09	16725.	3.42	---->ACCEPTABLE
225.0	1.038E+09	16725.	3.42	---->ACCEPTABLE
230.0	1.038E+09	16725.	3.42	---->ACCEPTABLE
235.0	1.038E+09	16725.	3.42	---->ACCEPTABLE
240.0	1.038E+09	16725.	3.42	---->ACCEPTABLE
245.0	1.038E+09	16725.	3.42	---->ACCEPTABLE
250.0	1.038E+09	16725.	3.42	---->ACCEPTABLE
255.0	1.038E+09	16725.	3.42	---->ACCEPTABLE
260.0	1.038E+09	16725.	3.42	---->ACCEPTABLE
265.0	1.038E+09	16725.	3.42	---->ACCEPTABLE
270.0	1.038E+09	16725.	3.42	---->ACCEPTABLE
275.0	1.038E+09	16725.	3.42	---->ACCEPTABLE
280.0	1.038E+09	16725.	3.42	---->ACCEPTABLE
285.0	1.038E+09	16725.	3.42	---->ACCEPTABLE
290.0	1.038E+09	16725.	3.42	---->ACCEPTABLE
295.0	1.038E+09	16725.	3.42	---->ACCEPTABLE
300.0	1.038E+09	16725.	3.42	---->ACCEPTABLE
305.0	1.038E+09	16725.	3.42	---->ACCEPTABLE
310.0	1.038E+09	16725.	3.42	---->ACCEPTABLE
315.0	1.038E+09	16725.	3.42	---->ACCEPTABLE
320.0	1.038E+09	16725.	3.42	---->ACCEPTABLE
325.0	1.038E+09	16725.	3.42	---->ACCEPTABLE
330.0	1.038E+09	16725.	3.42	---->ACCEPTABLE
335.0	1.038E+09	16725.	3.42	---->ACCEPTABLE
340.0	1.038E+09	16725.	3.42	---->ACCEPTABLE
345.0	1.038E+09	16725.	3.42	---->ACCEPTABLE
350.0	1.038E+09	16725.	3.42	---->ACCEPTABLE
355.0	1.038E+09	16725.	3.42	---->ACCEPTABLE

ACCEPTABLE! MINIMUM SAFETY FACTOR = 3.42 AT 180.0 DEGREES.

DLL: DISTRIBUTED LIGAMENT LENGTH EVALUATION, REV. 2.1 (09/19/96)
DATE OF THIS ANALYSIS: 08/15/2002

SUMMARY OF INPUTS:
==========

Title: LG2 Shroud H6 NU DLL Run
Angle increment = 1.0 deg. (COARSE)
Membrane Stress, Pm = 675. psi
Bending Stress, Pb = 2344. psi
Safety Factor, SF = 2.77
Mean Radius, Rm = 99.38 inches
Wall Thickness, t = 2.000 inches
Stress Intensity, Sm = 14400. psi
Fluence = 0.0E+00 n/cm^2
(Thus, LEFM evaluation not applicable)

REGION	THETA1 [deg.]	THETA2 [deg.]	THICKNESS [inches]
1	.0	360.0	.470

LIMIT LOAD RESULTS:
==========

NOTE: THE FOLLOWING LIMIT LOAD RESULTS ASSUME THAT THE FLAWS TAKE COMPRESSION.

ALPHA [deg]	MOMENT [in-lbs]	Pb' [psi]	SAFETY FACTOR	RESULT
.0	1.101E+09	17746.	6.10	---->ACCEPTABLE
5.0	1.101E+09	17746.	6.10	---->ACCEPTABLE
10.0	1.101E+09	17746.	6.10	---->ACCEPTABLE
15.0	1.101E+09	17746.	6.10	---->ACCEPTABLE
20.0	1.101E+09	17746.	6.10	---->ACCEPTABLE
25.0	1.101E+09	17746.	6.10	---->ACCEPTABLE
30.0	1.101E+09	17746.	6.10	---->ACCEPTABLE
35.0	1.101E+09	17746.	6.10	---->ACCEPTABLE
40.0	1.101E+09	17746.	6.10	---->ACCEPTABLE
45.0	1.101E+09	17746.	6.10	---->ACCEPTABLE
50.0	1.101E+09	17746.	6.10	---->ACCEPTABLE
55.0	1.101E+09	17746.	6.10	---->ACCEPTABLE
60.0	1.101E+09	17746.	6.10	---->ACCEPTABLE
65.0	1.101E+09	17746.	6.10	---->ACCEPTABLE
70.0	1.101E+09	17746.	6.10	---->ACCEPTABLE
75.0	1.101E+09	17746.	6.10	---->ACCEPTABLE
80.0	1.101E+09	17746.	6.10	---->ACCEPTABLE
85.0	1.101E+09	17746.	6.10	---->ACCEPTABLE
90.0	1.101E+09	17746.	6.10	---->ACCEPTABLE
95.0	1.101E+09	17746.	6.10	---->ACCEPTABLE
100.0	1.101E+09	17746.	6.10	---->ACCEPTABLE
105.0	1.101E+09	17746.	6.10	---->ACCEPTABLE
110.0	1.101E+09	17746.	6.10	---->ACCEPTABLE
115.0	1.101E+09	17746.	6.10	---->ACCEPTABLE
120.0	1.101E+09	17746.	6.10	---->ACCEPTABLE
125.0	1.101E+09	17746.	6.10	---->ACCEPTABLE
130.0	1.101E+09	17746.	6.10	---->ACCEPTABLE

135.0	1.101E+09	17746.	6.10	---->ACCEPTABLE
140.0	1.101E+09	17746.	6.10	---->ACCEPTABLE
145.0	1.101E+09	17746.	6.10	---->ACCEPTABLE
150.0	1.101E+09	17746.	6.10	---->ACCEPTABLE
155.0	1.101E+09	17746.	6.10	---->ACCEPTABLE
160.0	1.101E+09	17746.	6.10	---->ACCEPTABLE
165.0	1.101E+09	17746.	6.10	---->ACCEPTABLE
170.0	1.101E+09	17746.	6.10	---->ACCEPTABLE
175.0	1.101E+09	17746.	6.10	---->ACCEPTABLE
180.0	1.101E+09	17746.	6.10	---->ACCEPTABLE
185.0	1.101E+09	17746.	6.10	---->ACCEPTABLE
190.0	1.101E+09	17746.	6.10	---->ACCEPTABLE
195.0	1.101E+09	17746.	6.10	---->ACCEPTABLE
200.0	1.101E+09	17746.	6.10	---->ACCEPTABLE
205.0	1.101E+09	17746.	6.10	---->ACCEPTABLE
210.0	1.101E+09	17746.	6.10	---->ACCEPTABLE
215.0	1.101E+09	17746.	6.10	---->ACCEPTABLE
220.0	1.101E+09	17746.	6.10	---->ACCEPTABLE
225.0	1.101E+09	17746.	6.10	---->ACCEPTABLE
230.0	1.101E+09	17746.	6.10	---->ACCEPTABLE
235.0	1.101E+09	17746.	6.10	---->ACCEPTABLE
240.0	1.101E+09	17746.	6.10	---->ACCEPTABLE
245.0	1.101E+09	17746.	6.10	---->ACCEPTABLE
250.0	1.101E+09	17746.	6.10	---->ACCEPTABLE
255.0	1.101E+09	17746.	6.10	---->ACCEPTABLE
260.0	1.101E+09	17746.	6.10	---->ACCEPTABLE
265.0	1.101E+09	17746.	6.10	---->ACCEPTABLE
270.0	1.101E+09	17746.	6.10	---->ACCEPTABLE
275.0	1.101E+09	17746.	6.10	---->ACCEPTABLE
280.0	1.101E+09	17746.	6.10	---->ACCEPTABLE
285.0	1.101E+09	17746.	6.10	---->ACCEPTABLE
290.0	1.101E+09	17746.	6.10	---->ACCEPTABLE
295.0	1.101E+09	17746.	6.10	---->ACCEPTABLE
300.0	1.101E+09	17746.	6.10	---->ACCEPTABLE
305.0	1.101E+09	17746.	6.10	---->ACCEPTABLE
310.0	1.101E+09	17746.	6.10	---->ACCEPTABLE
315.0	1.101E+09	17746.	6.10	---->ACCEPTABLE
320.0	1.101E+09	17746.	6.10	---->ACCEPTABLE
325.0	1.101E+09	17746.	6.10	---->ACCEPTABLE
330.0	1.101E+09	17746.	6.10	---->ACCEPTABLE
335.0	1.101E+09	17746.	6.10	---->ACCEPTABLE
340.0	1.101E+09	17746.	6.10	---->ACCEPTABLE
345.0	1.101E+09	17746.	6.10	---->ACCEPTABLE
350.0	1.101E+09	17746.	6.10	---->ACCEPTABLE
355.0	1.101E+09	17746.	6.10	---->ACCEPTABLE

ACCEPTABLE! MINIMUM SAFETY FACTOR = 6.10 AT 145.0 DEGREES.

APPENDIX G- INSPECTION RECORDS OF WELDS H1 THROUGH H7

GE Nuclear Energy

Interim Report

Limerick Generating Station - Unit 2
Core Shroud Ultrasonic Examination

Prepared for
PECO Energy

Prepared by:
GE Nuclear Energy

Report No.: 1H61R, Rev. 0

May 1999

Prepared By: John J. Hayden — Date: 5/12/99
John Hayden, GE Inspection Services, Sr. NDE Specialist
Level III - Ultrasonic Method

Reviewed By: R. L. Keck — Date: 5-12-99
Richard Keck, GE Inspection Services, Project Manager

Reviewed By: Thomas L. Anderson Jr — Date: 5/12/99
Thomas Anderson, PECO Energy, ISI Engineer

Project Summary

From 29 April 1999 through 8 May 1999, General Electric (GE) Inspection Services conducted ultrasonic examinations of Core Shroud Assembly welds at Limerick Generating Station - Unit 2. The scope of the examinations included selected portions of four circumferential welds, H3, H4, H5 and H7. The detection of flaw indications forced an expansion of the work scope to include the examination of accessible portions of welds H1, H2 and H6.

All welds were examined using the GE OD Tracker scanning device, while employing the conventional technique, which uses 45° shear wave, 60° longitudinal wave and OD/ID Creeping wave search units in an integral housing.

This report contains specific details regarding the performance and results of the examinations.

References

- ASME Boiler and Pressure Vessel Code, Section XI, *Rules for Inservice Inspection of Nuclear Power Plant Components*, 1989 edition.

  Note: The ultrasonic examinations described in this report are not addressed by the ASME Code. The examinations were performed in accordance with the intent of ASME Sections V and XI with regard to the basic ultrasonic requirements, whenever possible.

- BWRVIP-03 *Reactor Pressure Vessel and Internals Guidelines.*
- General Electric document GE-UT-503, Version 8, *Procedure For Automated Ultrasonic Examination Of Shroud Assembly Welds.*

Equipment

The capabilities of the MicroTomo™ data acquisition system, TomoView™ Workstation and GE Trimodal search unit were successfully demonstrated in accordance with BWRVIP-03 "Reactor Pressure Vessel and Internals Guidelines".

MicroTomo™ Acquisition System

The MicroTomo™ data acquisition system was utilized for this examination. The MicroTomo™ is a multiplexed, digital system. The system digitizes the entire A-scan or RF waveform at the rate of up to 120 MHz. The entire A-scan is digitized and archived to a one gigabyte optical disk or 2 gigabyte removable hard disk for off-line analysis and subsequent examination comparisons.

OD Tracker Scanner

This device rests upon and drives around the steam dam structure of the core shroud assembly. Interchangeable vertical arms of appropriate length descend from the carriage of the GE OD Tracker to the elevation of each of the four welds examined. The search units are applied to the outside surface of the shroud, and are manipulated about the accessible portions of the circumference of the shroud. Search units are also moved toward and away from each weld, in a raster scan pattern. This scanning motion generally provides full coverage of the BWRVIP-specified surface regions on both sides of the weld.

TomoView™ Data Analysis Workstation

The TomoView™ Workstation was used for the evaluation of ultrasonic data. The data is displayed with any combination of time or amplitude in A-scan, B-scan, C-scan and D-scan views, with 1024 X 768 pixel resolution. The TomoView™ software permits any desired manipulation of the A, B, C or D-scan images. An adjustable color palette is provided for image enhancement. Each image, or specific region therein, can be selectively enlarged. GE data analysts have used the TomoView™ software to successfully demonstrate complete flaw detection and sizing capabilities in the PDI Piping Program at the EPRI NDE Center.

Examination Results

Numerous indications of intergranular stress corrosion were observed during the course of the examinations of welds H1, H2, H3, H4 H5 and H6. The examination of weld H7 did not reveal flaw indications. This document also contains a section of Examination Summary Sheets for each weld examined.

Examination Personnel

The examinations were conducted by the following GE Inspection Specialists:

MicroTomo ™/Carousel/OD Tracker System Operators:

Martin Crane	Level II
Nicholas Labella	Level II
Terry Rockwood	Level III
Michael Webster	Level II

Ultrasonic Data Analyst:

John Hayden	Level III
James Halley	

Project Manager:

Richard Keck

Weld H1

Examination from Bottom Side of Weld - 45 & ODCr Coverage

Total Scan Length Examined (Deg.)	206.66°	Shroud Thickness (in.)	2.00
Total Scan Length Examined (in.)	396.78	Circumference (in.)	691.15
Percent of Weld Length Examined	57.41%	Inches per Degree	1.92
Percent of Examined OD Weld Length Flawed	34.30%		
Percent of Total OD Weld Length Flawed	19.69%		
Percent of Examined ID Weld Length Flawed	31.95%		
Percent of Total ID Weld Length Flawed	18.34%		

	45° - OCDr											
	Looking Up Data Files	45° Scan Start	45° Scan End	ODCr Scan Start	ODCr Scan End	Scan Length	45-ODCr Coverage	45-ODCr Overlap		Ligament Start	Ligament End	Ligament Length
TriModal	H1H2011-1	12.06°	16.46°	11.01°	15.41°	4.40°	5.45°	3.95°		11.01°	39.46°	28.45°
TriModal	H1H2018-1	13.56°	24.01°	12.51°	22.96°	10.45°	11.50°	4.00°				
TriModal	H1H2026-1	21.06°	31.51°	20.01°	30.46°	10.45°	11.50°	7.95°				
TriModal	H1H2033-1	24.61°	39.46°	23.56°	38.41°	14.85°	15.90°					
TriModal	H1H2036-1	51.56°	66.41°	50.51°	65.36°	14.85°	15.90°	12.99°		50.51°	126.46°	75.95°
TriModal	H1H2063-1	54.47°	64.37°	53.42°	63.32°	9.90°	10.95°	3.45°				
TriModal	H1H2071-1	61.97°	72.42°	60.92°	71.37°	10.45°	11.50°	4.00°				
TriModal	H1H1078-1	69.47°	79.92°	68.42°	78.87°	10.45°	11.50°	4.00°				
TriModal	H1H2086-1	76.97°	87.42°	75.92°	86.37°	10.45°	11.50°	4.00°				
TriModal	H1H2093-1	84.47°	94.92°	83.42°	93.87°	10.45°	11.50°	4.00°				
TriModal	H1H2101-1	91.97°	102.42°	90.92°	101.37°	10.45°	11.50°	4.00°				
TriModal	H1H2108-1	99.47°	112.67°	98.42°	111.62°	13.20°	14.25°	2.66°				
TriModal	H1H2116-1	111.06°	126.46°	110.01°	125.41°	15.40°	16.45°					
TriModal	H1H2191-1	191.56°	196.51°	190.81°	195.46°	4.95°	6.00°	2.97°		190.51°	219.88°	29.37°
TriModal	H1H2198-1	194.59°	205.04°	193.54°	203.99°	10.45°	11.50°	5.03°				
TriModal	H1H2206-1	201.06°	211.51°	200.01°	210.46°	10.45°	11.50°	7.95°				
TriModal	H1H2213-1	204.61°	219.88°	203.56°	219.83°	15.27°	16.32°					
TriModal	H1H2243-1	234.61°	244.92°	233.56°	243.87°	10.31°	11.36°	4.00°		233.56°	306.46°	72.90°
TriModal	H1H2251-1	241.97°	252.42°	240.92°	251.37°	10.45°	11.50°	4.00°				
TriModal	H1H2258-1	249.47°	259.92°	248.42°	258.87°	10.45°	11.50°	4.00°				
TriModal	H1H2226-1	256.97°	267.42°	255.92°	266.37°	10.45°	11.50°	4.00°				
TriModal	H1H2273-1	264.47°	274.92°	263.42°	273.87°	10.45°	11.50°	4.00°				
TriModal	H1H2281-1	271.97°	281.87°	270.92°	280.82°	9.90°	10.95°	3.45°				
TriModal	H1H2288-1	279.47°	292.67°	278.42°	291.62°	13.20°	14.25°	2.66°				
TriModal	H1H2296-1	291.06°	306.46°	290.01°	305.41°	15.40°	16.45°					
TriModal												
							303.66°	97.00°				

Total Scanned:	303.66°	Total Ligament Length:	206.66°
Overlap:	97.00°		
Net Coverage:	206.66°		
Percentage of Weld Scanned:	57.41%	Percentage of Total Weld Length:	57.41%

REVIEWED PECO NUCLEAR
NDE SERVICES BRANCH
MAY 12 '99

John F. Hayden 5/12/99

Weld H1

Inside Surface Flaws

Flaw No.	Weld Side	Initiating Surface	Flaw Start (Degrees)	Flaw End (Degrees)	Flaw Length (Degrees)	Flaw Length (Inches)	Length Search Unit
1°	NS	ID	12.06°	16.46°	4.40°	8.45	ODCr
2°	NS	ID	19.06°	39.46°	20.40°	39.17	ODCr
3°	NS	ID	65.27°	70.57°	5.30°	10.18	ODCr
4	NS	ID	72.22°	73.32°	1.10°	2.11	ODCr
5°	NS	ID	74.97°	79.17°	4.20°	8.06	ODCr
6°	NS	ID	84.47°	88.32°	3.85°	7.39	ODCr
7°	NS	ID	91.07°	94.31°	3.24°	6.22	ODCr
8°	NS	ID	116.01°	120.41°	4.40°	8.45	ODCr
10	NS	ID	120.96°	122.06°	1.10°	2.11	ODCr
11°	NS	ID	206.01°	209.31°	3.30°	6.34	ODCr
12	NS	ID	215.46°	217.13°	1.65°	3.17	ODCr
13	NS	ID	238.46°	240.11°	1.65°	3.17	ODCr
14°	NS	ID	261.92°	264.67°	2.75°	5.28	ODCr
16°	NS	ID	277.47°	280.57°	3.10°	5.95	ODCr
16	NS	ID	294.36°	296.56°	2.20°	4.22	ODCr
17°	NS	ID	297.11°	304.26°	7.15°	13.73	ODCr
18	NS	ID	305.36°	306.46°	1.10°	2.11	ODCr
					70.89°	136.11	

Outside Surface Flaws

Flaw No.	Weld Side	Initiating Surface	Flaw Start (Degrees)	Flaw End (Degrees)	Flaw Length (Degrees)	Flaw Length (Inches)	Length Search Unit
1°	NS	OD	13.16°	21.26°	8.10°	15.55	45.00°
2°	NS	OD	21.26°	22.91°	1.65°	3.13	45.00°
3°	NS	OD	24.36°	28.21°	3.85°	7.39	45.00°
4°	NS	OD	54.86°	59.81°	4.95°	9.50	45.00°
5°	NS	OD	61.97°	64.17°	2.20°	4.22	45.00°
6°	NS	OD	76.62°	80.27°	3.65°	7.01	45.00°
7°	NS	OD	88.22°	91.62°	3.40°	12.29	45.00°
8°	NS	OD	92.17°	94.92°	2.75°	5.28	45.00°
9°	NS	OD	98.02°	99.12°	1.10°	2.11	45.00°
10°	NS	OD	99.67°	101.32°	1.65°	3.17	45.00°
11°	NS	OD	101.67°	103.32°	1.65°	3.17	45.00°
12°	NS	OD	103.67°	106.62°	2.75°	5.28	45.00°
13°	NS	OD	107.17°	126.46°	19.29°	37.04	45.00°
14°	NS	OD	212.16°	214.36°	2.20°	4.22	45.00°
15°	NS	OD	243.07°	244.17°	1.10°	2.11	45.00°
16°	NS	OD	294.91°	297.66°	2.75°	5.28	45.00°
					66.02°	126.76	

REVIEWED PECO NUCLEAR
NDE SERVICES BRANCH J.L.Ad MAY 12 '99

John J Hayden 5/12/99

Weld H1

Inside Surface Flaws

No.	Location	Through-Wall Height	No.	Location	Through-Wall Height
1	13.79°	0.16	24	117.19°	0.18
2	16.44°	0.18	25	118.84°	0.28
3	20.24°	0.19	26	119.94°	0.20
4	21.34°	0.23	27	207.19°	0.34
5	23.54°	0.14	28	207.74°	0.17
6	24.99°	0.24	29	208.41°	0.24
7	26.64°	0.39	30	208.64°	0.19
8	28.29°	0.43	31	218.11°	0.16
9	31.04°	0.41	32	230.51°	0.31
10	33.36°	0.27	33	252.56°	0.07
11	35.56°	0.19	34	253.66°	0.19
12	36.31°	0.23	35	279.56°	0.20
13	66.91°	0.07	36	294.99°	0.36
14	67.01°	0.06	37	295.54°	0.35
15	68.11°	0.17	38	297.74°	0.22
16	69.76°	0.17	39	298.84°	0.19
17	72.77°	<0.06	40	300.49°	0.30
18	77.51°	0.17	41	301.59°	0.26
19	78.16°	0.26	42	303.24°	<0.06
20	84.56°	0.20	43	306.99°	0.16
21	87.31°	<0.06			
22	92.01°	0.13			
23	93.16°	0.12			

Outside Surface Flaws

No.	Location	Through-Wall Height	No.	Location	Through-Wall Height	No.	Location	Through-Wall Height
1	13.56°	0.13	23	79.27°	0.14	45	116.14°	0.13
2	13.71°	0.10	24	79.37°	0.14	46	117.79°	0.16
3	16.21°	0.14	25	83.67°	0.16	47	117.79°	0.16
4	16.76°	0.18	26	86.87°	0.12	48	121.51°	<0.06
5	17.41°	0.16	27	88.87°	0.12	49	121.09°	0.09
6	17.96°	0.16	28	89.42°	0.16	50	122.19°	0.19
7	19.06°	0.13	29	89.97°	0.14	51	123.29°	0.16
8	20.36°	0.14	30	91.07°	0.16	52	124.39°	0.14
9	20.71°	0.16	31	93.62°	0.16	53	212.73°	0.14
10	22.16°	0.14	32	93.92°	0.19	54	213.28°	0.16
11	22.36°	0.16	33	99.12°	0.08	55	243.82°	0.14
12	24.91°	0.14	34	100.22°	0.09	56	285.46°	0.13
13	26.06°	0.12	35	102.22°	0.12	57	296.56°	0.16
14	25.46°	0.14	36	102.42°	0.10	58	297.11°	0.06
15	27.11°	0.16	37	106.62°	0.14			
16	27.23°	0.13	38	108.27°	0.16			
17	55.57°	0.16	39	109.37°	0.13			
18	55.96°	0.14	40	109.82°	0.16			
19	56.51°	0.14	41	110.47°	0.16			
20	57.51°	0.16	42	111.61°	0.16			
21	63.62°	0.16	43	112.16°	0.16			
22	77.17°	0.14	44	113.88°	0.20			

REVIEWED PECO NUCLEAR
NDE SERVICES BRANCH T.L. Ad MAY 12 '99

John J. Hayden 5/12/99

Weld H2

Examination of Top Side of Weld - 45 & ODCr Coverage

Total Scan Length Examined (Deg.)	206.80°	Shroud Thickness (In.)	2.00
Total Scan Length Examined (In.)	397.05	Circumference (In.)	691.15
Percent of Weld Length Examined	57.44%	Inches per Degree	1.92
Percent of Examined ID Weld Length Flawed	39.54%		
Percent of Total ID Weld Length Flawed	22.71%		
			81.77

	45-ODCr										
TriModal	H1H2011-1	12.03°	16.43°	10.98°	15.38°	4.40°	5.45°	3.95°	10.98°	39.30°	28.32°
TriModal	H1H2018-1	13.53°	23.98°	12.48°	22.93°	10.45°	11.50°	4.00°			0.00°
TriModal	H1H2026-1	21.03°	31.48°	19.98°	30.43°	10.45°	11.50°	8.28°			0.00°
TriModal	H1H2033-1	24.25°	39.30°	23.20°	38.25°	15.05°	16.10°				0.00°
TriModal	H1H2056-1	51.53°	66.38°	50.48°	65.33°	14.85°	15.90°	12.98°	50.48°	126.43°	75.95°
TriModal	H1H2063-1	54.45°	64.35°	53.40°	63.30°	9.90°	10.95°	3.32°			0.00°
TriModal	H1H2071-1	62.08°	72.53°	61.03°	71.48°	10.45°	11.50°	4.13°			0.00°
TriModal	H1H2078-1	69.45°	79.90°	68.40°	78.85°	10.45°	11.50°	4.00°			0.00°
TriModal	H1H2086-1	76.95°	87.40°	75.90°	86.35°	10.45°	11.50°	3.98°			0.00°
TriModal	H1H2093-1	84.47°	94.90°	83.42°	93.85°	10.43°	11.48°	4.00°			0.00°
TriModal	H1H2101-1	91.95°	102.40°	90.90°	101.35°	10.45°	11.50°	4.00°			0.00°
TriModal	H1H2108-1	99.45°	112.65°	98.40°	111.60°	13.20°	14.25°	2.67°			0.00°
TriModal	H1H2116-1	111.03°	125.43°	109.98°	125.38°	15.40°	16.45°				0.00°
TriModal	H1H2191-1	191.53°	196.48°	190.48°	195.43°	4.95°	6.00°	3.00°	190.48°	219.85°	29.37°
TriModal	H1H2198-1	194.53°	204.95°	193.48°	203.90°	10.42°	11.47°	4.97°			0.00°
TriModal	H1H2206-1	201.03°	211.48°	199.98°	210.43°	10.45°	11.50°	8.55°			0.00°
TriModal	H1H2213-1	203.98°	219.85°	202.93°	218.80°	15.87°	16.92°				0.00°
TriModal	H1H2243-1	234.45°	244.90°	233.40°	243.85°	10.45°	11.50°	4.00°	233.40°	306.57°	73.17°
TriModal	H1H2251-1	241.95°	252.40°	240.90°	251.35°	10.45°	11.50°	4.00°			0.00°
TriModal	H1H2258-1	249.45°	259.90°	248.40°	258.85°	10.45°	11.50°	4.00°			
TriModal	H1H2266-1	256.95°	267.40°	255.90°	266.35°	10.45°	11.50°	4.00°			
TriModal	H1H2273-1	264.45°	275.03°	263.40°	273.98°	10.58°	11.63°	4.13°			
TriModal	H1H2281-1	271.95°	281.98°	270.90°	280.93°	10.03°	11.08°	3.58°			
TriModal	H1H2288-1	279.45°	292.65°	278.40°	291.60°	13.20°	14.25°	2.55°			
	H1H2296-1	291.15°	306.57°	290.10°	305.52°	15.42°	16.47°				
							304.83°	98.03°			
									Total Ligament Length:		206.80°
								206.80°			
									Percentage of Total Weld Length:		57.44%

REVIEWED PECO NUCLEAR
NDE SERVICES BRANCH MAY 12 '99

John J. Hayden 5/12/99

Weld H2

Inside Surface Flaws

Flaw No.	Weld Side	Initiating Surface	Flaw Start (Degrees)	Flaw End (Degrees)	Flaw Length (Degrees)	Flaw Length (Inches)	Length Search Unit
1*	NS	ID	12.72°	20.82°	8.10°	15.55	45°
2*	NS	ID	23.49°	25.14°	1.65°	3.17	45°
3	NS	ID	34.49°	35.59°	1.10°	2.11	45°
4	NS	ID	36.14°	38.34°	2.20°	4.22	45°
5*	NS	ID	50.57°	57.33°	6.76°	12.98	45°
6*	NS	ID	64.28°	70.88°	6.60°	12.67	45°
7	NS	ID	72.33°	73.98°	1.65°	3.17	45°
8*	NS	ID	74.53°	81.48°	6.95°	13.34	45°
9*	NS	ID	98.48°	99.58°	1.10°	2.11	45°
10	NS	ID	114.47°	116.12°	1.65°	3.17	45°
11	NS	ID	117.77°	119.97°	2.20°	4.22	45°
12	NS	ID	124.92°	125.47°	1.65°	3.17	45°
13	NS	ID	191.12°	195.52°	4.40°	8.45	45°
14	NS	ID	201.72°	203.37°	1.65°	3.17	45°
15*	NS	ID	203.92°	205.63°	1.71°	3.28	45°
16	NS	ID	233.48°	235.68°	2.20°	4.22	45°
17*	NS	ID	243.18°	261.48°	18.30°	35.14	45°
18*	NS	ID	278.13°	287.83°	9.70°	18.62	45°
19	NS	ID	294.47°	295.57°	1.10°	2.11	45°
20	NS	ID	304.37°	305.47°	1.10°	2.11	45°
					81.77°	157.00	

* Flaw detected in adjacent overlapping scan region.

REVIEWED PECO NUCLEAR
NDE SERVICES BRANCH J.L.Ad MAY 12 '99

John J. Hayden 5/12/99

Weld H2

Inside Surface Flaws

No.	Location	Through-Wall Height
1	13.18°	0.12
2	13.03°	0.12
3	14.68°	0.11
4	17.43°	0.09
5	20.18°	0.11
6	20.53°	0.11
7	23.28°	0.17
8	24.50°	0.10
9	34.95°	<0.05
10	37.15°	<0.05
11	51.03°	0.10
12	53.23°	0.12
13	54.33°	0.17
14	54.50°	0.09
15	64.75°	0.28
16	69.15°	0.18
17	69.50°	0.18
18	72.80°	0.31
19	77.00°	0.14
20	78.10°	0.08
21	80.85°	<0.05
22	99.15°	0.23
23	98.95°	0.17
24	102.88°	0.24
25	115.02°	0.11
26	118.79°	<0.05
27	125.39°	0.17
28	191.67°	0.08
29	192.37°	<0.05
30	192.68°	0.09
31	194.42°	0.24
32	195.13°	0.17
33	196.23°	0.18
34	203.93°	0.25
35	204.93°	0.24
36	204.50°	<0.05
37	234.50°	0.18
38	235.05°	0.16
39	235.60°	0.09
40	244.40°	0.18
41	246.38°	0.07
42	247.03°	0.14
43	248.68°	0.18
44	251.43°	0.11
45	256.10°	0.15
46	257.75°	0.17
47	256.45°	0.18
48	257.55°	0.16
49	259.75°	0.18
50	278.60°	<0.05
51	280.25°	<0.05
52	282.80°	<0.05
53	283.43°	0.11
54	258.63°	<0.05
55	286.73°	<0.05
56	292.94°	<0.05
57	305.39°	<0.05

Note: All inside surface flaws sized using the 60 degree search unit.

REVIEWED PECO NUCLEAR
NDE SERVICES BRANCH MAY 12 '99

John J Hayden 5/12/99

LIMERICK-2 SHROUD UT INSPECTION

AZIMUTH ZERO (NORTH)

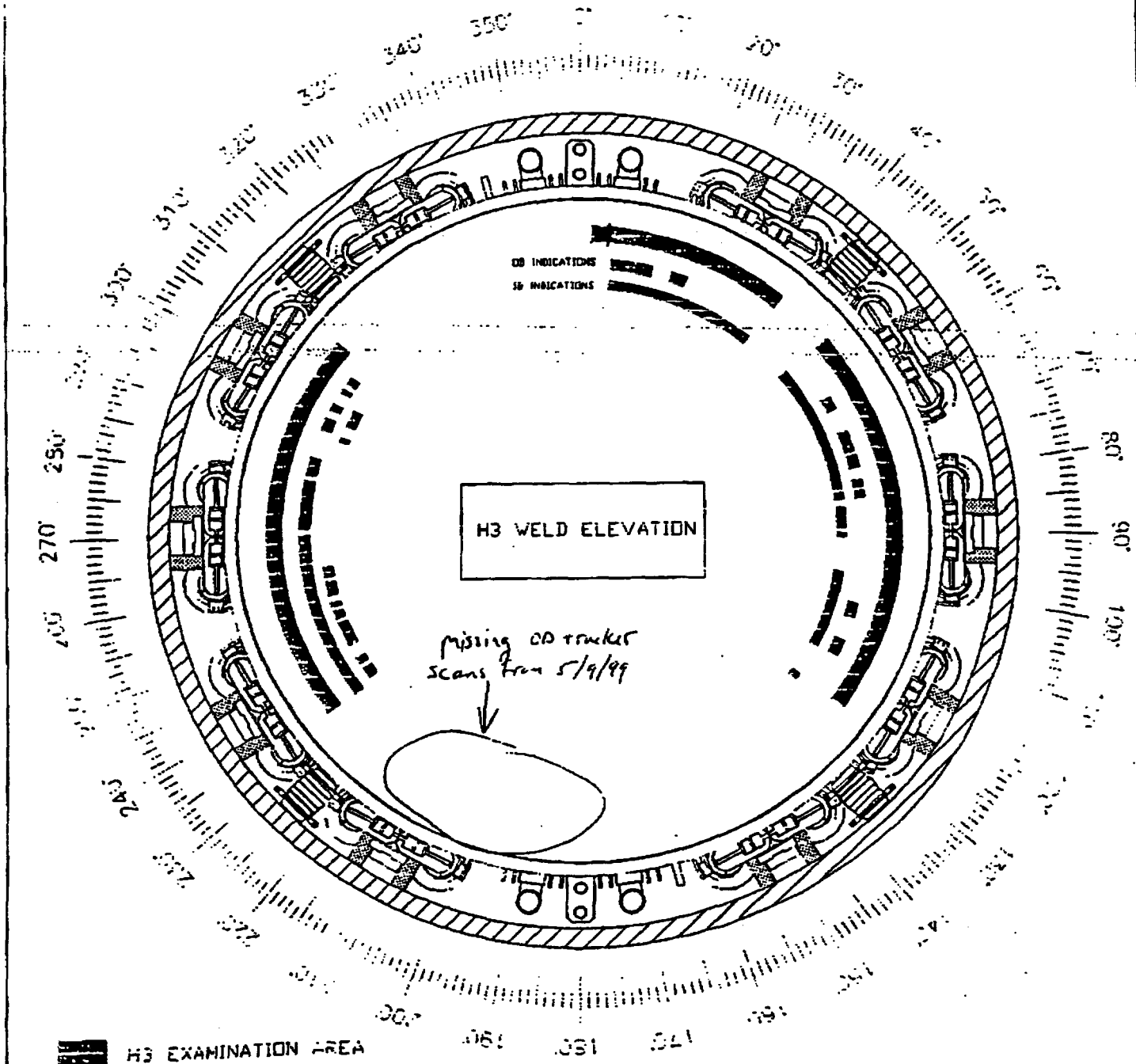

SKETCH NO. LK2-001

TITLE SHROUD TOP VIEW

PROJECT LIMERICK UNIT 2

NOTE: THIS SKETCH IS FOR ISI PROGRAM USE ONLY AND SHALL NOT BE USED FOR FABRICATION/INSTALLATION.

SKETCH RELEASE RECORD

REV	DATE	PREPARED	REVIEWED	INIT.	APPROVED	INIT.	PURPOSE
0	03-01-99	R.F. GRIZZI					SHROUD INSPECTABILITY STUDY

Weld H3

Examination from Bottom Side of Weld - 45 & ODCr Coverage

Total Scan Length Examined (Deg.)	221.51°	Shroud Thickness (in.)	2.00
Total Scan Length Examined (in.)	400.38	Circumference (in.)	650.69
Percent of Weld Length Examined	61.53%	Inches per Degree	1.81
Percent of Examined OD Weld Length Flawed	56.4%		
Percent of Total OD Weld Length Flawed	30.7%	ID	138.04
Percent of Examined ID Weld Length Flawed	61.4%	OD	110.50
Percent of Total ID Weld Length Flawed	37.8%		

45° - OCDr

	Looking Up Data Files	45° Scan Start	45° Scan End	ODCr Scan Start	ODCr Scan End	Scan Length	45-ODCr Coverage	45-ODCr Overlap	Ligament Start	Ligament End	Ligament Length
TriModal	H3011LU1	6.09°	15.99°	5.04°	14.94°	9.90°	10.95°	3.45°	5.04°	39.91°	34.87°
TriModal	H3018LU1	13.59°	24.04°	12.54°	22.99°	10.45°	11.50°	4.00°			
TriModal	H3026LU1	21.09°	31.54°	20.04°	30.49°	10.45°	11.50°	8.08°			
TriModal	H3033LD1	24.51°	39.91°	23.46°	38.86°	15.40°	16.45°				
TriModal	H3056LU1	51.09°	61.54°	50.04°	60.49°	10.45°	11.50°	8.08°	50.04°	109.96°	59.92°
TriModal	H3063LU1	54.51°	64.96°	53.46°	63.91°	10.45°	11.50°	4.00°			
TriModal	H3071LU1	62.51°	72.46°	60.96°	71.41°	10.45°	11.50°	4.00°			
TriModal	H3078LU1	69.51°	79.96°	68.46°	78.91°	10.45°	11.50°	4.00°			
TriModal	H3086LU1	77.01°	87.46°	75.96°	86.41°	10.45°	11.50°	4.00°			
TriModal	H3093LU1	84.51°	94.96°	83.46°	93.91°	10.45°	11.50°	4.00°			
TriModal	H3101LU1	92.01°	102.46°	90.96°	101.41°	10.45°	11.50°	4.00°			
TriModal	H3108LU1	99.51°	109.96°	98.46°	108.91°	10.45°	11.50°				
TriModal	H3116LU1	111.09°	126.49°	110.04°	125.44°	15.40°	16.45°		110.04°	126.49°	16.45°
TriModal	H3191-0	183.71°	193.61°	182.66°	192.56°	9.90°	10.95°	8.57°	182.66°	219.91°	37.25°
TriModal	H3191-1	186.09°	196.54°	185.04°	195.49°	10.45°	11.50°	4.00°			
TriModal	H3198-1	193.59°	204.04°	192.54°	202.99°	10.45°	11.50°	4.00°			
TriModal	H3206-1	201.09°	211.54°	200.04°	210.49°	10.45°	11.50°	8.08°			
TriModal	H3213-1	204.51°	219.91°	203.46°	218.86°	15.40°	16.45°				
TriModal	H3243LU1	234.51°	244.41°	233.46°	243.36°	9.90°	10.95°	3.45°	233.46°	306.49°	73.03°
TriModal	H3251LU1	242.01°	252.46°	240.96°	251.41°	10.45°	11.50°	4.00°			
TriModal	H3258LU1	249.51°	259.96°	248.46°	258.91°	10.45°	11.50°	4.00°			
TriModal	H3266LU1	257.01°	267.46°	255.96°	266.41°	10.45°	11.50°	4.00°			
TriModal	H3273LU1	264.51°	274.96°	263.46°	273.91°	10.45°	11.50°	4.00°			
TriModal	H3281LU1	272.01°	282.46°	270.96°	281.41°	10.45°	11.50°	4.00°			
TriModal	H3288LU1	279.51°	292.71°	278.46°	291.66°	13.20°	14.25°	2.75°			
TriModal	H3296LU1	291.01°	306.49°	289.96°	305.44°	15.48°	16.53°				
							319.90°	96.40°			

Total Scanned:	319.90°
Overlap:	98.40°
Net Coverage:	221.51°
Percentage of Weld Scanned:	61.53%

Total Ligament Length:	221.51°
Percentage of Total Weld Length:	61.53%

REVIEWED PECO NUCLEAR
NDE SERVICES BRANCH MAY 12 '99

5/12/99

Weld H3

Inside Surface Flaws

Location	Through-Wall Height	Location	Through-Wall Height
8.89°	0.22	91.16°	0.22
9.99°	0.19	100.66°	0.10
11.09°	0.16	101.76°	0.10
13.29°	0.25	103.41°	0.26
14.94°	0.10	104.51°	0.21
16.89°	0.28	105.61°	0.24
21.84°	0.36	107.26°	0.10
22.24°	0.25	110.54°	0.20
23.49°	0.24	111.64°	0.10
26.64°	0.34	113.64°	0.21
27.74°	0.25	115.49°	0.18
30.49°	0.31	117.14°	0.20
31.71°	0.27	125.99°	0.27
33.36°	0.26	194.39°	<0.05
34.46°	0.17	197.49°	0.19
36.11°	0.25	210.01°	<0.05
51.69°	0.21	214.46°	<0.05
53.34°	0.18	217.21°	0.19
56.64°	0.35	218.31°	<0.05
57.74°	0.28	235.11°	0.10
61.71°	0.15	236.21°	0.19
63.36°	0.30	243.71°	0.16
64.46°	0.25	244.26°	0.19
65.91°	0.31	245.36°	0.19
67.01°	0.39	246.46°	0.10
68.66°	0.27	248.11°	0.14
69.76°	0.23	250.86°	0.17
72.31°	0.25	253.41°	0.11
73.96°	0.36	256.71°	0.10
75.06°	0.37	257.06°	0.17
76.16°	0.24	258.16°	0.30
77.81°	0.27	258.71°	0.13
78.71°	0.24	291.14°	0.10
80.36°	0.32	296.09°	0.11
82.59°	<0.05	298.94°	0.10
85.31°	0.24	301.62°	<0.05
85.66°	0.22	304.37°	<0.05
88.41°	0.24		

Weld H3

Outside Surface Flaws

Location	Through-Wall Height	Location	Through-Wall Height
6.64°	0.15	254.46°	0.16
8.29°	0.11	255.56°	0.15
9.39°	0.11	258.11°	0.15
10.49°	0.16	261.06°	<0.05
12.14°	0.11	262.51°	0.10
13.24°	0.17	265.26°	0.11
19.64°	0.21	266.71°	0.15
62.76°	0.2	268.91°	0.10
72.26°	0.19	274.41°	0.10
74.46°	0.07	276.41°	0.06
75.56°	0.16	280.26°	0.11
76.11°	0.21	282.94°	0.24
80.31°	0.19	292.74°	0.12
106.66°	0.17	297.14°	0.12
107.76°	0.16		
108.86°	0.22		
114.39°	0.17		
116.04°	0.14		
187.57°	<0.05		
188.67°	<0.05		
189.77°	0.09		
191.97°	<0.05		
192.69°	<0.05		
194.34°	<0.05		
195.99°	<0.05		
216.06°	<0.05		
217.71°	<0.05		
235.06°	0.29		
238.71°	0.14		
240.67°	0.33		
242.76°	0.15		
243.86°	0.15		
245.86°	0.15		
249.71°	0.14		
251.36°	0.14		
253.36°	0.17		

REVIEWED PECO NUCLEAR
NDE SERVICES BRANCH MAY 12 '99

John J. Hayden 5/12/99

Flaw Summary for Weld H3

Outside Surface Flaws

	Flaw Start	Flaw End	Length	Length (in.)
1*	6.17°	14.97°	8.80°	15.93
2	18.62°	22.27°	3.65°	6.61
3	60.69°	63.94°	3.25°	5.88
4	68.69°	73.44°	4.75°	8.60
5	73.99°	76.74°	2.75°	4.98
6	79.29°	80.94°	1.65°	2.99
7	81.49°	83.14°	1.65°	2.99
8	105.64°	108.94°	3.30°	5.97
9	113.92°	117.77°	3.85°	6.97
10*	186.46°	198.54°	12.08°	21.86
11	208.79°	210.56°	1.77°	3.20
12	212.21°	218.81°	6.60°	11.95
13*	233.49°	263.14°	29.65°	53.67
14	263.69°	265.89°	2.20°	3.98
15	266.24°	269.54°	3.30°	5.97
16	270.99°	281.24°	10.25°	18.55
17*	282.34°	286.19°	3.85°	6.97
18*	292.27°	295.02°	2.75°	4.98
19	296.67°	298.32°	1.65°	2.99
20	301.07°	302.17°	1.10°	1.99
21*	303.27°	304.92°	1.65°	2.99

Inside Surface Flaws

	Flaw Start	Flaw End	Length	Length (in.)
1*	6.09°	39.91°	33.82°	61.21
2*	51.09°	80.86°	29.77°	53.88
3	81.41°	83.06°	1.65°	2.99
4	84.71°	89.46°	4.75°	8.60
5	90.56°	91.66°	1.10°	1.99
6*	99.51°	117.69°	18.18°	32.91
7	124.84°	126.49°	1.65°	2.99
8*	186.12°	203.29°	15.17°	27.46
9	213.86°	219.91°	6.05°	10.95
10	234.51°	237.26°	2.75°	4.98
11	238.31°	240.01°	1.70°	3.08
12	243.11°	249.16°	6.05°	10.95
13	250.06°	251.91°	1.85°	3.35
14	252.81°	253.91°	1.10°	1.99
15	255.56°	258.86°	3.30°	5.97
16	259.96°	262.16°	2.20°	3.98
17	291.09°	292.19°	1.10°	1.99
18	294.94°	298.79°	3.85°	6.97

REVIEWED PECO NUCLEAR
NDE SERVICES BRANCH J.L. [illegible] MAY 12 '99

John F. Hayden 5/12/99

LIMERICK-2 SHROUD UT INSPECTION

AZIMUTH ZERO (NORTH)

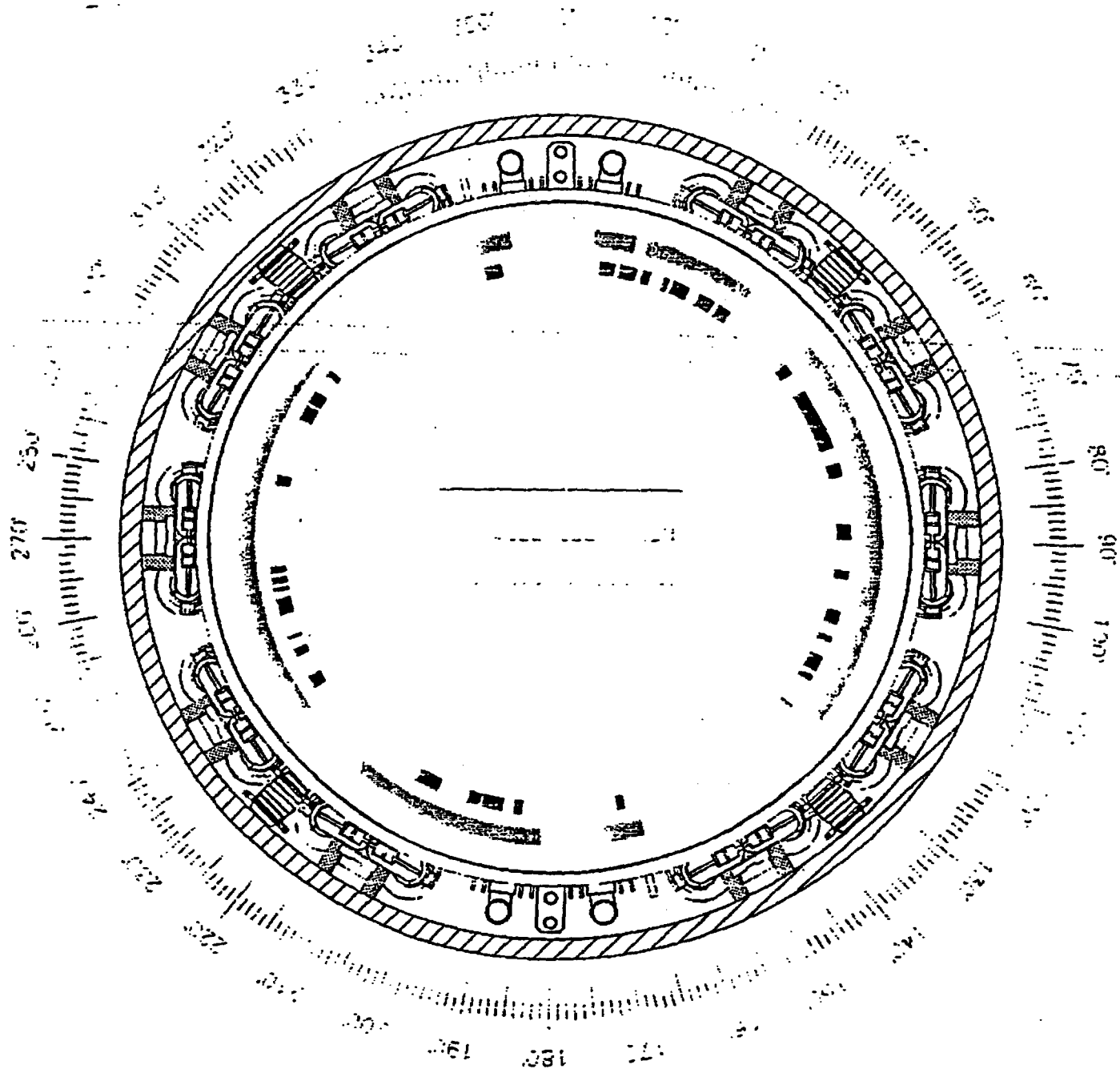

H4 INDICATION AREAS

SKETCH NO. LK2-001

TITLE SHROUD TOP VIEW

PROJECT LIMERICK UNIT 2

NOTE: THIS SKETCH IS FOR ISI PROGRAM USE ONLY AND SHALL NOT BE USED FOR FABRICATION/INSTALLATION.

SKETCH RELEASE RECORD

REV	DATE	PREPARED	REVIEWED	INIT.	APPROVED	INIT.	PURPOSE
0	03-01-99	R.F. GRIZZI					SHROUD INSPECTABILITY STUDY
1	04-11-99	R.F. GRIZZI					SHROUD COVERAGE

Weld H4

Total Scan Length Examined (Deg.)	218.23°	Shroud Thickness (In.)	2.00
Total Scan Length Examined (In.)	394.44	Circumference (In.)	650.69
Percent of Weld Length Examined	60.62%	Inches per Degree	1.81
Percent of Examined Weld Length Flawed	0.0%	Total Flawed Length (In.)	0.00
Percent of Total Weld Length Flawed	0.0%	Total Flawed Length (Deg.)	0.00°

	Looking Up Data Files	ODCr Scan Start	ODCr Scan End	45° Scan Start	45° Scan End	Scan Length	45-ODCr Coverage	45-ODCr Overlap	Ligament Start	Ligament End	Ligament Length
							45-ODCr				
TriModal	H4011-1	5.07°	12.77°	4.02°	11.72°	7.70°	8.75°		4.02°	12.77°	8.75°
TriModal	H4026-1	17.01°	26.81°	15.96°	24.76°	8.80°	9.85°	6.79°	15.96°	35.47°	19.51°
TriModal	H4026-2	20.07°	35.47°	19.02°	34.42°	15.40°	16.45°				
TriModal	H4056-1	51.09°	66.58°	50.04°	65.53°	15.49°	16.54°	13.12°	50.04°	130.25°	80.21°
TriModal	H4063-1	54.51°	69.91°	53.46°	68.86°	15.40°	16.45°	1.45°			
TriModal	H4078-1	69.51°	84.91°	68.46°	83.86°	15.40°	16.45°	1.45°			
TriModal	H4098-1	84.51°	99.91°	83.46°	98.86°	15.40°	16.45°	1.45°			
TriModal	H4108-1	99.51°	114.91°	98.46°	113.86°	15.40°	16.45°	1.11°			
TriModal	H4116-1	114.85°	130.25°	113.80°	129.20°	15.40°	16.45°				
TriModal	H4191-0	183.17°	193.59°	182.12°	192.54°	10.42°	11.47°	8.55°	182.12°	219.91°	37.79°
TriModal	H4191-1	188.09°	198.54°	185.04°	195.49°	10.45°	11.50°	4.00°			
TriModal	H4198-1	193.59°	204.04°	192.54°	202.99°	10.45°	11.50°	4.00°			
TriModal	H4206-1	201.09°	211.54°	200.04°	210.49°	10.45°	11.50°	8.08°			
TriModal	H4213-1	204.51°	219.91°	203.46°	218.86°	15.40°	16.45°				
TriModal	H4243-1	235.58°	249.85°	234.50°	248.80°	14.30°	15.35°	1.35°	234.50°	306.48°	71.98°
TriModal	H4258-1	249.55°	264.95°	248.50°	263.90°	15.40°	16.45°	1.50°			
TriModal	H4273-1	264.50°	279.90°	263.45°	278.85°	15.40°	16.45°	1.45°			
TriModal	H4288-2	279.50°	294.90°	278.45°	293.85°	15.40°	16.45°	4.87°			
TriModal	H4296-1	291.08°	306.48°	290.03°	305.43°	15.40°	16.45°				
							277.35°	59.13°			

Total Scanned:	277.35°		
Overlap:	59.13°	Total Ligament Length:	218.23°
Net Coverage:	218.23°		
Percentage of Weld Scanned:	60.62%	Percentage of Total Weld Length:	60.62%

REVIEWED PECO NUCLEAR
NDE SERVICES BRANCH MAY 12 '99

John J. Hayden 5/12/99

Weld H4

Examination of Top Side of Weld - 45 & ODCr Coverage

Total Scan Length Examined (Deg.)	229.66°	Shroud Thickness (in.)	2.00
Total Scan Length Examined (in.)	415.08	Circumference (in.)	650.69
Percent of Weld Length Examined	63.79%	Inches per Degree	1.81
Percent of Examined OD Weld Length Flawed	40.85%	Total Flawed Length (in.)	169.80
Percent of Total OD Weld Length Flawed	26.06%	Total Flawed Length (Deg.)	93.81°

OD 93.81

Weld H4

	45-ODCr											
	Looking Down Data Files	ODCr Scan Start	ODCr Scan End	45° Scan Start	45° Scan End	Scan Length	45-ODCr Coverage	45-ODCr Overlap		Ligament Start	Ligament End	Ligament Length
TriModal	H4011-1	6.06°	13.76°	5.01°	12.71°	7.70°	8.75°			5.01°	13.76°	8.75°
TriModal	H4028-1	16.98°	25.78°	15.93°	24.73°	8.80°	8.85°	5.77°		15.93°	36.46°	20.53°
TriModal	H4026-2	21.06°	36.46°	20.01°	35.41°	15.40°	15.46°					
TriModal	H4056-1	51.06°	66.46°	50.01°	65.41°	15.40°	15.46°	13.03°		60.01°	126.92°	76.91°
TriModal	H4063-1	54.46°	69.86°	53.43°	68.83°	15.40°	15.46°	1.43°				
TriModal	H4078-1	69.50°	84.90°	68.46°	83.86°	15.40°	15.46°	1.47°				
TriModal	H4096-1	84.46°	99.86°	83.43°	98.83°	15.40°	15.46°	1.45°				
TriModal	H4108-1	99.46°	114.86°	98.43°	113.83°	15.40°	15.46°	4.41°				
TriModal	H4116-1	111.52°	126.92°	110.47°	125.87°	15.40°	15.46°					
Trimodal(SC)	H4168-1	164.72°	170.77°	163.67°	169.72°	6.05°	7.10°			163.67°	170.77°	7.10°
TriModal	H4191-0	183.63°	194.08°	182.58°	193.03°	10.45°	11.50°	9.07°		182.58°	219.88°	37.30°
TriModal	H4191-1	186.06°	196.51°	185.01°	195.46°	10.45°	11.50°	4.00°				
TriModal	H4198-1	193.56°	204.01°	192.51°	202.96°	10.45°	11.50°	4.00°				
TriModal	H4206-1	201.06°	211.51°	200.01°	210.46°	10.45°	11.50°	8.08°				
TriModal	H4213-1	204.46°	219.86°	203.43°	218.83°	15.40°	16.46°					
TriModal	H4243-1	236.56°	249.86°	234.50°	248.80°	14.30°	15.35°	1.40°		234.50°	306.48°	71.98°
TriModal	H4258-1	249.50°	264.90°	248.45°	263.85°	15.40°	16.46°	1.45°				
TriModal	H4273-1	264.50°	279.90°	263.45°	278.85°	15.40°	16.46°	1.45°				
TriModal	H4288-1	279.50°	294.95°	278.45°	293.90°	15.45°	16.50°	4.92°				
TriModal	H4296-1	291.06°	306.46°	290.03°	305.43°	15.40°	16.46°					
Trimodal(SC)	H4341-3	344.72°	350.77°	343.67°	349.72°	6.05°	7.10°			343.67°	350.77°	7.10°

Total Ligament Length: 229.66°

Percentage of Total Weld Length: 63.79%

(SC) = Suction Cup Scanner

REVIEWED PECO NUCLEAR
NDE SERVICES BRANCH J.T.A. MAY 12 '99 John J. Hayden 5/12/99

Weld H4

Flaw No.	Weld Side	Initiating Surface	Flaw Start (Degrees)	Flaw End (Degrees)	Flaw Length (Degrees)	Flaw Length (Inches)	Length Search Unit	Maximum Flaw Height	Flaw Thru-Wall Percent	Remaining Ligament (Inches)	Through-Wall Search Unit
1	NS	OD	7.79°	11.09°	3.30°	5.97	ODCr	0.10	5.00%	1.90	45°
2*	NS	OD	12.11°	15.49°	3.38°	6.12	ODCr	0.10	5.00%	1.90	45°
3	NS	OD	16.59°	18.24°	1.65°	2.99	ODCr	0.10	5.00%	1.90	45°
4	NS	OD	21.06°	22.16°	1.10°	1.99	ODCr	0.10	5.00%	1.90	45°
5*	NS	OD	23.03°	26.56°	3.53°	6.39	ODCr	0.10	5.00%	1.90	45°
6	NS	OD	28.76°	32.06°	3.30°	5.97	ODCr	0.10	5.00%	1.90	45°
7	NS	OD	33.16°	35.91°	2.75°	4.98	ODCr	0.10	5.00%	1.90	45°
8	NS	OD	51.13°	52.78°	1.65°	2.99	ODCr	0.10	5.00%	1.90	45°
9	NS	OD	53.33°	55.53°	2.20°	3.98	ODCr	0.10	5.00%	1.90	45°
10*	NS	OD	57.68°	70.58°	12.90°	23.35	ODCr	0.11	5.50%	1.89	45°
11	NS	OD	73.88°	76.63°	2.75°	4.98	ODCr	0.10	5.00%	1.90	45°
12	NS	OD	86.68°	89.98°	3.30°	5.97	ODCr	0.10	5.00%	1.90	45°
13	NS	OD	96.58°	98.23°	1.65°	2.99	ODCr	0.10	5.00%	1.90	45°
14	NS	OD	104.98°	107.73°	2.75°	4.98	ODCr	0.10	5.00%	1.90	45°
15	NS	OD	110.48°	111.58°	1.10°	1.99	ODCr	0.10	5.00%	1.90	45°
16*	NS	OD	114.82°	118.12°	3.30°	5.97	ODCr	0.10	5.00%	1.90	45°
17	NS	OD	119.22°	120.32°	1.10°	1.99	ODCr	0.10	5.00%	1.90	45°
18	NS	OD	126.37°	127.47°	1.10°	1.99	ODCr	0.10	5.00%	1.90	45°
19	NS	OD	166.20°	167.70°	1.50°	2.72	ODCr	0.10	5.00%	1.90	45°
20	NS	OD	186.06°	187.71°	1.65°	2.99	ODCr	0.10	5.00%	1.90	45°
21	NS	OD	189.91°	194.31°	4.40°	7.96	ODCr	0.10	5.00%	1.90	45°
22	NS	OD	194.66°	197.41°	2.75°	4.98	ODCr	0.10	5.00%	1.90	45°
23	NS	OD	203.81°	208.76°	4.95°	8.96	ODCr	0.10	5.00%	1.90	45°
24	NS	OD	236.94°	239.69°	2.75°	4.98	ODCr	0.10	5.00%	1.90	45°
25	NS	OD	244.35°	246.00°	1.65°	2.99	ODCr	0.10	5.00%	1.90	45°
26	NS	OD	248.20°	249.30°	1.10°	1.99	ODCr	0.10	5.00%	1.90	45°
27	NS	OD	253.40°	256.70°	3.30°	5.97	ODCr	0.10	5.00%	1.90	45°
28	NS	OD	258.35°	259.45°	1.10°	1.99	ODCr	0.10	5.00%	1.90	45°
29	NS	OD	260.00°	261.10°	1.10°	1.99	ODCr	0.10	5.00%	1.90	45°
30	NS	OD	262.20°	263.30°	1.10°	1.99	ODCr	0.10	5.00%	1.90	45°
31	NS	OD	280.70°	282.70°	2.00°	3.62	ODCr	0.10	5.00%	1.90	45°
32	NS	OD	294.93°	298.23°	3.30°	5.97	ODCr	0.10	5.00%	1.90	45°
33	NS	OD	298.78°	301.53°	2.75°	4.98	ODCr	0.10	5.00%	1.90	45°
34	NS	OD	305.38°	306.48°	1.10°	1.99	ODCr	0.10	5.00%	1.90	45°
35	NS	OD	343.70°	344.70°	1.00°	1.81	ODCr	0.10	5.00%	1.90	45°
36	NS	OD	344.70°	348.20°	3.50°	6.34	ODCr	0.10	5.00%	1.90	45°
					93.81°	169.80					

REVIEWED PECO NUCLEAR
NDE SERVICES BRANCH MAY 12 '99

John J. Hayden 5/12/99

LIMERICK-2 SHROUD UT INSPECTION

AZIMUTH ZERO (NORTH)

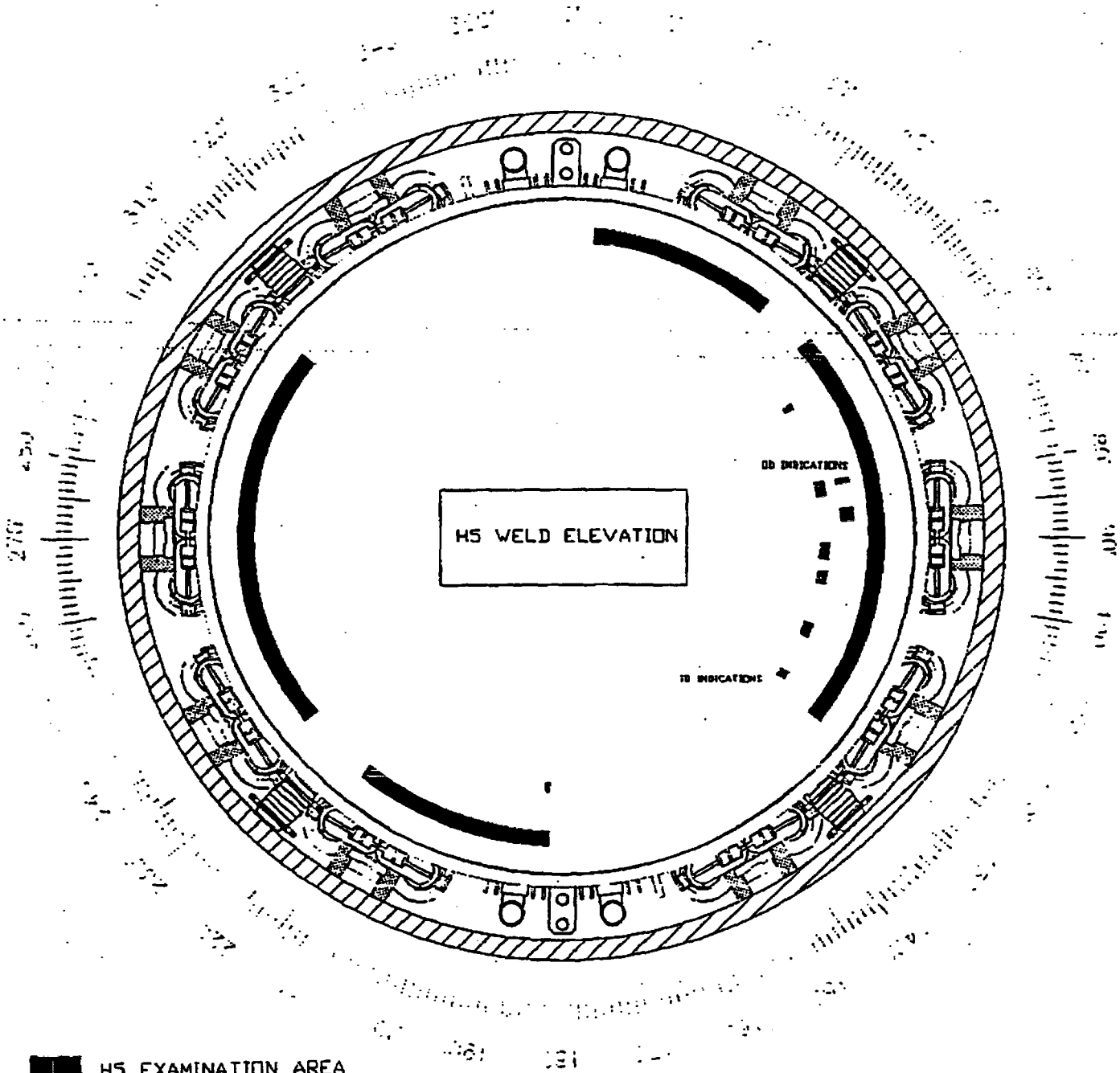

H5 EXAMINATION AREA

H5 OD INDICATION AREAS

H5 ID INDICATION AREAS

SKETCH NO. LK2-001

TITLE SHROUD TOP VIEW

PROJECT LIMERICK UNIT 2

GE DWG NO.

NOTE: THIS SKETCH IS FOR ISI PROGRAM USE ONLY AND SHALL NOT BE USED FOR FABRICATION/INSTALLATION.

SKETCH RELEASE RECORD

REV	DATE	PREPARED	REVIEWED	INIT.	APPROVED	INIT.	PURPOSE
0	03-01-99	R.F. GRIZZI					SHROUD INSPECTABILITY STUDY
1	04-11-99	R.F. GRIZZI					SHROUD COVERAGE

Weld H5

Examination from Top Side of Weld - 45 & ODCr Coverage

Total Scan Length Examined (Deg.)	221.09°	*Shroud Thickness (in.)*	2.00
Total Scan Length Examined (in.)	399.61	*Circumference (in.)*	650.69
Percent of Weld Length Examined	61.41%	*Inches per Degree*	1.81
Percent of Examined OD Weld Length Flawed	1.73%	*Total Flawed Length (in.)*	131.06
Percent of Total OD Weld Length Flawed	1.06%	*Total Flawed Length (Deg.)*	72.41°
Percent of Examined ID Weld Length Flawed	8.17%		
Percent of Total ID Weld Length Flawed	5.02%		

45-ODCr

	Looking Down Data Files	ODCr Scan Start	ODCr Scan End	45° Scan Start	45° Scan End	Scan Length	45-ODCr Coverage	45-ODCr Overlap	Ligament Start	Ligament End	Ligament Length
TriModal	H5011LD1	6.12°	16.57°	5.07°	16.52°	10.45°	11.50°	4.00°	5.07°	39.94°	34.87°
TriModal	H5018LD1	13.62°	24.07°	12.57°	23.02°	10.45°	11.50°	4.00°			
TriModal	H5026LD1	21.12°	31.57°	20.07°	30.52°	10.45°	11.50°	8.08°			
TriModal	H5033LD1	24.54°	39.94°	23.49°	38.89°	15.40°	16.45°				
TriModal	H5056LD1	51.12°	61.57°	50.07°	60.52°	10.45°	11.50°	8.08°	50.07°	126.52°	76.45°
TriModal	H5063LD1	54.54°	64.99°	53.49°	63.94°	10.45°	11.50°	4.00°			
TriModal	H5071LD1	62.04°	72.49°	60.99°	71.44°	10.45°	11.50°	4.00°			
TriModal	H5078LD1	69.54°	79.99°	68.49°	78.94°	10.45°	11.50°	4.00°			
TriModal	H5086LD1	77.04°	87.49°	75.99°	86.44°	10.45°	11.50°	4.00°			
TriModal	H5093LD1	84.54°	94.99°	83.49°	93.94°	10.45°	11.50°	4.00°			
TriModal	H5101LD1	92.04°	102.49°	90.99°	101.44°	10.45°	11.50°	4.00°			
TriModal	H5108LD1	99.54°	112.74°	98.49°	111.69°	13.20°	14.25°	2.67°			
TriModal	H5116LD1	111.12°	126.52°	110.07°	125.47°	15.40°	16.45°				
TriModal	H5190-1	183.63°	194.08°	182.58°	193.03°	10.45°	11.50°	9.07°	182.58°	219.33°	36.75°
TriModal	H5191-1	186.08°	195.98°	185.01°	194.91°	9.90°	10.95°	4.44°			
TriModal	H5198-1	192.57°	203.02°	191.52°	201.97°	10.45°	11.50°	3.01°			
TriModal	H5206-1	201.06°	211.51°	200.01°	210.46°	10.45°	11.50°	8.08°			
TriModal	H5213-1	204.48°	219.33°	203.43°	218.28°	14.85°	15.90°				
TriModal	H5243LD1	234.54°	244.99°	233.49°	243.94°	10.45°	11.50°	4.00°	233.49°	306.52°	73.03°
TriModal	H5251LD1	242.04°	252.49°	240.99°	251.44°	10.45°	11.50°	4.00°			
TriModal	H5258LD1	249.54°	259.99°	248.49°	258.94°	10.45°	11.50°	4.00°			
TriModal	H5266LD1	257.04°	267.49°	255.99°	266.44°	10.45°	11.50°	4.00°			
TriModal	H5273LD1	264.54°	274.99°	263.49°	273.94°	10.45°	11.50°	4.00°			
TriModal	H5281LD1	272.04°	282.49°	270.99°	281.44°	10.45°	11.50°	4.00°			
TriModal	H5288LD1	279.54°	292.74°	278.49°	291.69°	13.20°	14.25°	2.67°			
	H5296LD1	291.12°	306.52°	290.07°	305.47°	15.40°	16.45°				
							323.12°	102.03°			
									Total Ligament Length:		221.09°
							221.09°				
									Percentage of Total Weld Length:		61.41%

REVIEWED PECO NUCLEAR
NDE SERVICES BRANCH MAY 12 '99

5/12/99

Weld H5

Inside Surface Flaws

No.:	Sizing Location	Through-Wall Height	Search Unit
1	59.42°	<0.05	60°
2	58.96°	<0.05	60°
3	78.39°	<0.05	60°
4	92.09°	<0.05	60°
5	93.74°	<0.05	60°
6	98.14°	<0.05	60°
7	99.79°	<0.05	60°
8	111.72°	<0.05	60°
9	122.17°	<0.05	60°
10	123.82°	<0.05	60°
11	183.11	<0.05	60°

Outside Surface Flaws

	Sizing Location	Through-Wall Height	Search Unit
1	77.84°	<0.05	45°
2	84.04°	<0.05	45°

REVIEWED PECO NUCLEAR
NDE SERVICES BRANCH J.E. [illegible] MAY 12 '99

John J Hayden 5/12/99

Weld H5

Flaw No.	Weld Side	Initiating Surface	Flaw Start (Degrees)	Flaw End (Degrees)	Flaw Length (Degrees)	Flaw Length (Inches)	Search Unit
1	NS	ID	58.44°	59.97°	1.53°	2.77	45°
2*	NS	ID	77.01°	80.31°	3.30°	5.97	45°
3	NS	OD	77.29°	78.36°	1.07°	5.00	ODCr
4	NS	OD	83.49°	86.25°	2.76°	6.97	ODCr
5	NS	ID	90.91°	94.76°	3.85°	4.98	45°
6*	NS	ID	97.61°	100.26°	2.76°	6.03	45°
7*	NS	ID	109.49°	112.82°	3.33°	6.03	45°
8	NS	ID	121.62°	123.82°	2.20°	3.98	45°
9	NS	ID	183.11°	184.21°	1.10°	1.99	45°

Total Flaw Length at Inside Surface: 18.06°
Total Flaw Length at Outside Surface: 3.83°

*Flaw detected in adjacent overlapping scans

REVIEWED PECO NUCLEAR
NDE SERVICES BRANCH MAY 12 '99

John J Hayden 5/12/99

LIMERICK-2 SHROUD UT INSPECTION

AZIMUTH ZERO (NORTH)

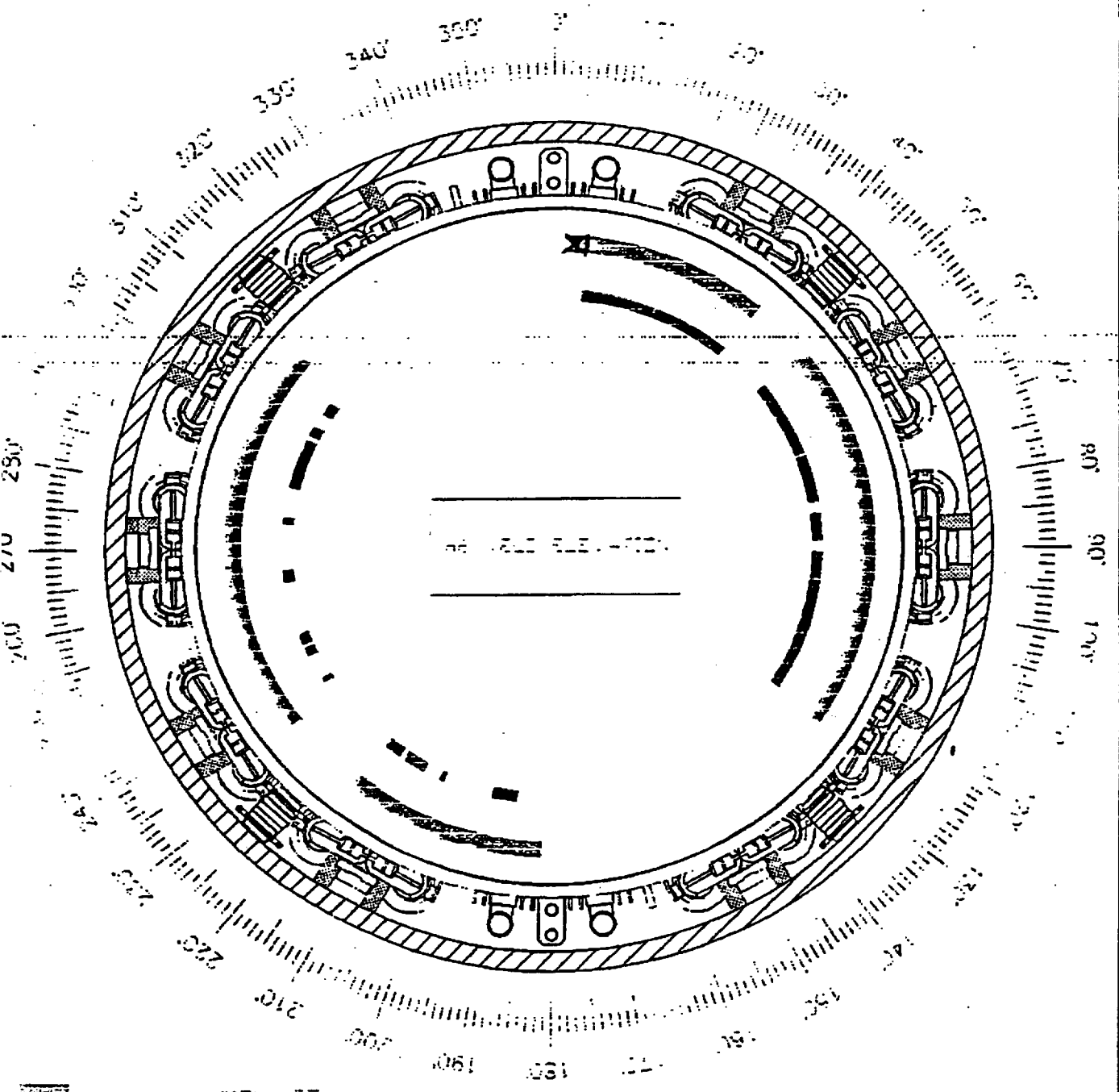

H6 ID INDICATION AREAS

SKETCH NO. LK2-001

TITLE SHROUD TOP VIEW

PROJECT LIMERICK UNIT 2

GE DWG NO.

NOTE: THIS SKETCH IS FOR EI PROGRAM USE ONLY AND SHALL NOT BE USED FOR FABRICATION/INSTALLATION.

SKETCH RELEASE RECORD

V	DATE	PREPARED	REVIEWED	INIT.	APPROVED	INIT.	PURPOSE
	03-01-99	R.F. GRIZZI					SHROUD INSPECTABILITY STUDY
	04-11-99	R.F. GRIZZI					SHROUD COVERAGE

Weld H6

Examination from Bottom Side of Weld - 45 & ODCr Coverage

Total Scan Length Examined (Deg.)	214.21	Shroud Thickness (in.)	2.00
Total Scan Length Examined (in.)	346.69	Circumference (in.)	630.67
Percent of Weld Length Examined	0.00%	Inches per Degree	1.76
Percent of Examined ID Weld Length Flawed	64.8%	Total Flawed Length (in.)	242.90
Percent of Total ID Weld Length Flawed	38.6%	Total Flawed Length (Deg.)	138.80°

45° - OCDr

	Looking Up Data Files	45° Scan Start	45° Scan End	ODCr Scan Start	ODCr Scan End	Scan Length	45-ODCr Coverage	45-ODCr Overlap	Ligament Start	Ligament End	Ligament Length
TriModal	H6011LU1	6.09°	16.54°	5.04°	15.49°	10.45°	11.50°	4.00°	5.04°	39.36°	34.32°
TriModal	H6018LU1	13.59°	24.04°	12.54°	22.99°	10.45°	11.50°	4.00°			
TriModal	H6026LU1	21.09°	31.54°	20.04°	30.49°	10.45°	11.50°	8.08°			
TriModal	H6033LD1	24.51°	39.36°	23.46°	38.31°	14.85°	15.90°				
TriModal	H6056LU1	51.09°	61.54°	50.04°	60.49°	10.45°	11.50°	11.50°	50.04°	126.49°	76.45°
TriModal	H6063LU1	61.09°	61.54°	60.04°	60.49°	10.45°	11.50°	0.58°			
TriModal	H6071LU1	62.01°	72.46°	60.96°	71.41°	10.45°	11.50°	4.00°			
TriModal	H6078LU1	69.51°	79.96°	68.46°	78.91°	10.45°	11.50°	4.00°			
TriModal	H6086LU1	77.01°	87.46°	75.96°	86.41°	10.45°	11.50°	4.00°			
TriModal	H6093LU1	84.51°	94.95°	83.46°	93.91°	10.45°	11.50°	4.00°			
TriModal	H6101LU1	92.01°	102.46°	90.96°	101.41°	10.45°	11.50°	4.00°			
TriModal	H6108LU2	99.51°	112.16°	98.46°	111.11°	12.65°	13.70°	2.12°			
TriModal	H6116LU2	111.09°	126.49°	110.04°	125.44°	15.40°	16.45°				
TriModal	H6191-0	183.71°	193.61°	182.66°	192.56°	9.90°	10.95°	8.67°	182.66°	219.36°	36.70°
TriModal	H6191-1	186.09°	196.54°	185.04°	195.49°	10.45°	11.50°	3.00°			
TriModal	H6198LU1	194.59°	205.04°	193.54°	203.99°	10.45°	11.50°	5.00°			
TriModal	H6206LU1	201.09°	211.54°	200.04°	210.49°	10.45°	11.50°	8.08°			
TriModal	H6213LU1	204.51°	219.36°	203.46°	218.31°	14.85°	15.90°				
TriModal	H6243LU1	238.59°	247.47°	237.54°	246.42°	8.88°	9.93°	6.51°	237.54°	304.29°	66.75°
TriModal	H6251LU1	242.01°	252.46°	240.96°	251.41°	10.45°	11.50°	4.00°			
TriModal	H6258LU1	249.51°	259.96°	248.46°	258.91°	10.45°	11.50°	4.00°			
TriModal	H6266LU1	257.01°	267.46°	255.96°	266.41°	10.45°	11.50°	4.00°			
TriModal	H6273LU1	264.51°	275.04°	263.46°	273.99°	10.53°	11.58°	4.08°			
TriModal	H6281LU1	272.01°	282.46°	270.96°	281.41°	10.45°	11.50°	4.00°			
TriModal	H6288LU1	279.51°	292.71°	278.46°	291.66°	13.20°	14.25°	2.67°			
TriModal	H6296LU1	291.09°	304.29°	290.04°	303.24°	13.20°	14.25°				
							318.33°	104.12°			

Total Scanned:	318.33°		
Overlap:	104.12°	Total Ligament Length:	214.21°
Net Coverage:	214.21°		
Percentage of Weld Scanned:	68.50%	Percentage of Total Weld Length:	59.50%

REVIEWED PECO NUCLEAR
NDE SERVICES BRANCH MAY 12 '99

John J Hayden 5/12/99

Flaw No.	Weld Side	Initiating Surface	Flaw Start (Degrees)	Flaw End (Degrees)	Flaw Length (Degrees)	Flaw Length (Inches)	Length Search Unit
1*	NS	ID	6.09°	21.84°	15.75°	27.56	45.00°
2*	NS	ID	22.19°	39.36°	17.17°	30.05	45.00°
3*	NS	ID	51.09°	63.11°	12.02°	21.04	45.00°
4*	NS	ID	65.86°	68.61°	2.75°	4.81	45.00°
5*	NS	ID	69.16°	79.76°	10.60°	18.55	45.00°
6	NS	ID	82.51°	88.36°	5.85°	10.24	45.00°
7*	NS	ID	91.11°	93.86°	2.75°	4.81	45.00°
8*	NS	ID	92.01°	96.96°	4.95°	8.66	45.00°
9*	NS	ID	97.51°	123.19°	25.68°	44.94	45.00°
10*	NS	ID	187.74°	193.24°	5.50°	9.63	45.00°
11*	NS	ID	204.39°	205.49°	1.10°	1.93	45.00°
12*	NS	ID	209.34°	214.41°	5.07°	8.87	45.00°
13*	NS	ID	215.51°	219.36°	3.85°	6.74	45.00°
14*	NS	ID	238.59°	239.69°	1.10°	1.92	45.00°
15*	NS	ID	245.31°	247.39°	2.08°	3.64	45.00°
16	NS	ID	248.06°	250.26°	2.20°	3.85	45.00°
17*	NS	ID	262.51°	265.26°	2.75°	4.81	45.00°
18*	NS	ID	275.31°	276.96°	1.65°	2.89	45.00°
19*	NS	ID	283.91°	294.94°	11.03°	19.30	45.00°
20	NS	ID	296.04°	298.24°	2.20°	3.85	45.00°
21*	NS	ID	301.54°	304.29°	2.75°	4.81	45.00°

Total Degrees: 138.80°

Total Inches: 242.90

REVIEWED PECO NUCLEAR
NDE SERVICES BRANCH T.L. Bailey MAY 1 2 '99

John J. Hayden 5/12/99

Weld H6

Inside Surface Flaws

Location	Through-Wall Height	
1	7.79°	0.08
2	9.99°	0.07
3	12.74°	0.06
4	14.39°	0.06
5	16.39°	0.06
6	19.14°	0.06
7	20.24°	<0.05
8	23.89°	0.10
9	25.54°	0.06
10	29.39°	0.15
11	30.06°	0.15
12	31.63°	0.21
13	37.21°	0.17
14	51.14°	0.16
15	52.24°	0.27
116	53.85°	0.29
17	52.24°	0.23
18	54.99°	0.14
19	58.84°	0.23
20	61.51°	0.22
21	67.01°	0.19
22	70.86°	0.18
23	73.96°	0.24
24	76.16°	0.20
25	83.11°	<0.05
226	84.76°	0.12
217	86.76°	0.10
28	93.86°	0.27
29	95.91°	0.24
30	98.66°	0.18
31	100.66°	0.28

Location	Through-Wall Height	
32	103.96°	0.23
33	105.06°	0.16
34	107.26°	0.17
35	111.69°	0.18
36	113.34°	0.17
37	117.74°	0.24
38	119.94°	0.19
39	188.89°	0.21
40	191.64°	0.27
41	192.74°	0.35
42	204.94°	<0.05
43	210.49°	0.26
44	211.25°	0.28
45	212.90°	0.20
46	217.03°	0.15
47	239.19°	0.07
48	245.36°	<0.05
49	250.11°	<0.05
50	263.66°	0.27
51	264.56°	0.19
52	275.91°	0.30
53	285.61°	0.20
54	286.71°	0.27
55	288.36°	0.28
56	289.46°	0.28
57	292.21°	0.28
58	293.89°	0.16
59	297.19°	0.16
60	302.69°	<0.05

REVIEWED PECO NUCLEAR
NDE SERVICES BRANCH MAY 12 '99

John J. Hayden 5/12/99

Weld H7

Total Scan Length Examined (Deg.)	212.74°	Shroud Thickness (in.)	2.00
Total Scan Length Examined (in.)	372.69	Circumference (in.)	630.67
Percent of Weld Length Examined	59.09%	Inches per Degree	1.75
Percent of Examined Weld Length Flawed	0.0%		
Percent of Total Weld Length Flawed	0.0%		

45-ODCr

	Looking Down Data Files	ODCr Scan Start	ODCr Scan End	45° Scan Start	45° Scan End	Amount of Scan Overlap	Scan Length	Overall Scan Length	45-ODCr Coverage	45-ODCr Overlap	Ligament Start	Ligament End	Ligament Length
TriModal	H7011LD1	6.08°	21.48°	5.03°	20.43°		15.40°		16.45°	5.53°	5.03°	36.42°	31.39°
TriModal	H7026LD1	17.00°	22.50°	16.95°	21.45°		5.50°		6.55°	2.47°			
TriModal	H7028LD2	21.08°	36.42°	20.03°	35.37°		15.34°		16.39°				
	H7041LD1	Not Scanned											
	H7048LD1	Not Scanned											
TriModal	H7063LD1	54.50°	69.90°	53.45°	68.85°		15.40°		16.45°	1.45°	53.45°	126.48°	73.03°
TriModal	H7078LD1	69.50°	84.90°	68.45°	83.85°		15.40°		16.45°	1.45°			
TriModal	H7093LD1	84.50°	99.90°	83.45°	98.85°		15.40°		16.45°	1.45°			
TriModal	H7108LD1	99.50°	114.90°	98.45°	113.85°		15.40°		16.45°	4.87°			
TriModal	H7116LD1	111.08°	126.48°	110.03°	125.43°		15.40°		16.45°				
	H7123LD1	Not Scanned											
	H7183LD1	Not Scanned											
TriModal	H7191LD1	186.08°	201.48°	185.03°	200.43°		15.40°		16.45°	1.45°	185.03°	216.48°	31.45°
TriModal	H7206LD1	201.08°	216.48°	200.03°	215.43°		15.40°		16.45°				
	H7221LD1	Not Scanned											
	H7236LD1	Not Scanned											
TriModal	H7243LD	235.68°	249.87°	234.60°	248.82°		14.32°		15.37°	1.42°	234.50°	311.38°	76.88°
TriModal	H7258LD1	249.50°	264.95°	248.45°	263.90°		15.45°		16.50°	1.50°			
TriModal	H7273LD1	264.50°	279.95°	263.45°	278.90°		15.45°		16.50°	1.50°			
TriModal	H7288LD1	279.50°	294.95°	278.45°	293.90°		15.45°		16.50°	4.92°			
TriModal	H7296LD1	291.08°	306.53°	290.03°	305.48°		15.45°		16.50°	6.40°			
TriModal	H7303LD1	301.18°	311.38°	300.13°	310.33°		10.20°		11.25°				
	H7356LD1	Not Scanned											
									247.11°	34.37°			

Total Scanned:	247.11°		
Overlap:	34.37°		
Net Coverage:	212.74°	45-ODCr Coverage:	
Percentage of Weld Scanned:	59.09%	45-ODCr Overlap:	
		45-ODCr Net Coverage:	

Total Ligament Length: 212.74°

Percentage of Total Weld Length: 59.09%

REVIEWED PECO NUCLEAR
NDE SERVICES BRANCH MAY 1 2 '99

John J Hayden 5/12/99

Section 3

Summary of ASME Section XI Repairs and Replacements Performed During Cycle 7 April 21, 2001 to March 23, 2003

Summary of ASME Section XI Repairs and Replacements Performed During Cycle 7

SYSTEM 011 EMERGENCY SERVICE WATER

R0800943 011-2012, replaced 8" check valve disc.

SYSTEM 041 NUCLEAR BOILER

R0900518 041-2F010B, Feedwater check valve inspection; replaced valve disc.

R0869133 PSV-041-2F013A, Replaced MSRV body with reworked body S/N 180 and pilot S/N 016.

R0868142 PSV-041-2F013B, Replaced MSRV body with reworked body S/N 175 and pilot S/N 021.

R0869139 PSV-041-2F013C, Replaced MSRV body with reworked body S/N 150 and pilot S/N 022.

R0869138 PSV-041-2F013D, Replaced MSRV body with reworked body S/N 190 and pilot S/N 017. Repaired inlet flange by welding.

R0868115 PSV-041-2F013E, Replaced MSRV body with reworked body S/N 176 and pilot S/N 029.

R0869044 PSV-041-2F013F, Replaced MSRV body with reworked body S/N 174 and pilot S/N 027.

R0869049 PSV-041-2F013G, Replaced MSRV body with reworked body S/N 193 and pilot S/N 015.

R0869131 PSV-041-2F013H, Replaced MSRV body with reworked body S/N 170 and pilot S/N 018. Repaired inlet flange by welding.

R0869137 PSV-041-2F013J, Replaced MSRV body with reworked body S/N 181 and pilot S/N 040.

R0869129 PSV-041-2F013K, Replaced MSRV body with reworked body S/N 148 and pilot S/N 020.

R0869135 PSV-041-2F013L, Replaced MSRV body with reworked body S/N 151 and pilot S/N 025.

R0864454 PSV-041-2F013M, Replaced MSRV body with reworked body S/N 189 and pilot S/N 023.

R0864209 PSV-041-2F013N, Replaced MSRV body with reworked body S/N 147 and pilot S/N 024.

R0869130 PSV-041-2F013S, Replaced MSRV body with reworked body S/N 169 and pilot S/N 030.

SYSTEM 053 FUEL POOL COOLING

C0193967 GBB-210-1, Installed high point vent.

SYSTEM 044 REACTOR WATER CLEAN-UP

C0204536 HV-044-2F039, Replaced valve.

Summary of ASME Section XI Repairs and Replacements Performed During Cycle 7

SYSTEM 047 CONTROL ROD DRIVES

R0867313 20-S299-06-35, Replaced CRD at reactor core location 06-35.

20-S299-14-43, Replaced CRD at reactor core location 14-43.

20-S299-18-35, Replaced CRD at reactor core location 18-35.

20-S299-22-11, Replaced CRD at reactor core location 22-11.

20-S299-22-15, Replaced CRD at reactor core location 22-15.

20-S299-22-51, Replaced CRD at reactor core location 22-51.

20-S299-26-07, Replaced CRD at reactor core location 26-07.

20-S299-30-59, Replaced CRD at reactor core location 30-59.

20-S299-34-03, Replaced CRD at reactor core location 34-03.

20-S299-34-07, Replaced CRD at reactor core location 34-07.

20-S299-34-11, Replaced CRD at reactor core location 34-11.

20-S299-38-23, Replaced CRD at reactor core location 38-23.

20-S299-38-59, Replaced CRD at reactor core location 38-59.

20-S299-42-19, Replaced CRD at reactor core location 42-19.

20-S299-42-51, Replaced CRD at reactor core location 42-51.

20-S299-46-27, Replaced CRD at reactor core location 46-27.

20-S299-46-51, Replaced CRD at reactor core location 46-51.

20-S299-50-47, Replaced CRD at reactor core location 50-47.

20-S299-58-35, Replaced CRD at reactor core location 58-35.

SYSTEM 048 STANDBY LIQUID CONTROL

R0891800 XV-048-2F004C, Replaced inlet fitting & trigger body.

SYSTEM 051 RESIDUAL HEAT REMOVAL

C0194970 2B-E205, Installed tube plugs and seal welded. Replaced bottom head studs and nuts.

C0203362 HV-051-2F050B, Replaced 12" check valve disc.

C0204446 HV-051-2F050A, Reworked valve internals; weld repair disc post.

Summary of ASME Section XI Repairs
and Replacements Performed During Cycle 7

R0724582	051-2F090D, Replaced check valve disc.
R0863913	051-2F090C, Replaced check valve disc.
R0896042	051-2F089D, Replaced check valve disc.
SYSTEM 052	**CORE SPRAY**
C0194544	PSV-052-2F032A, Test and replace relief valve.
R0871833	052-2F030B, Replaced valve and adjacent pipe.
SYSTEM 057	**CONTAINMENT ATMOSPHERE CONTROL**
R0872422	PSV-057-237B-1, Plug welded and re-drilled orifice plate hole.
SYSTEM 103	**SNUBBERS**
A1361522	DCA-201-H060, Replaced mechanical snubber with S/N 42198.
A1361523	EBB-209-H015, Replaced mechanical snubber with S/N 42196.
	GBB-217-H015, Replaced mechanical snubber with S/N 42203.
	GBB-219-H093 (B), Replaced mechanical snubber with S/N 42213.
	HBB-210-H021(A), Replaced mechanical snubber with S/N 42197.
	HBC-293-H012, Replaced mechanical snubber with S/N 41413.
A1361529	GBB-213-H013(A), Replaced mechanical snubber with S/N 42195.
	GBB-213-H013(B) , Replaced mechanical snubber with S/N 41840.
	GBB-213-H054, Replaced mechanical snubber with S/N 42209.
	GBB-219-H059(A), Replaced mechanical snubber with S/N 42218.
	GBB-218-H064, Replaced mechanical snubber with S/N 42215.
	GBB-218-H068, Replaced mechanical snubber with S/N 42217.
	GBB-218-H069(B), Replaced mechanical snubber with S/N 41839.
	GBB-218-H078(A), Replaced mechanical snubber with S/N 42216.
	GBB-218-H078(B), Replaced mechanical snubber with S/N 42210.
	GBB-219-H012, Replaced mechanical snubber with S/N 42214.
	GBB-219-H090(B), Replaced mechanical snubber with S/N 42219.

FORM NIS-2 OWNER'S REPORT FOR REPAIRS OR REPLACEMENTS
As Required by the Provisions of the ASME Code Section XI

1. Owner Exelon Generation Company, LLC (Name) — Date May 9, 2003

200 Exelon Way, Kennett Square, PA 19348 (Address) — Sheet 1 of 2

2. Plant Limerick Generating Station (Name) — Unit 2

P.O. Box 2300, Sanatoga, PA 19464-2300 (Address) — Work Order No. R0800943 (Repair Organization P.O. No., Job No. etc.)

3. Work Performed by Exelon Nuclear (Name) — Type Code Symbol Stamp N/A
Authorization No. N/A

P.O. Box 2300, Sanatoga, PA 19464-2300 (Address) — Expiration Date N/A

4. Identification of System Emergency Service Water (System 011) — Line No. HBC-268 — Valve 011-2012

5. (a) Applicable Construction Code ASME III 1971 Edition, Summer 1971 Addenda, N/A Code Case
(b) Applicable Edition of Section XI Utilized for Repairs or Replacements 1989

6. Identification of Components Repaired or Replaced and Replacement Components

Name of Component	Name of Manufacturer	Manufacturer Serial No.	National Board No.	Other Identification	Year Built	Repaired, Replaced, or Replacement	ASME Code Stamped (Yes or No)
8" Valve 011-2012 Disc	Anchor/Darling	Heat# B335 S/N 3	N/A	* 114-77495 PO# 257805-348029	1996	REPLACEMENT	YES

* Traceability per Exelon stock code number.

7. Description of work: Valve disc replaced.
8. Tests conducted: Hydrostatic ☐ Pneumatic ☐ Nominal Operating Pressure ■ ;
Other ☐ 95 psi Test Temp. N/A °F.

NOTE: Supplemental sheets in form of lists, sketches, or drawings may be used, provided (1) size 8 1/2 in. x 11 in., (2) information in items 1 through 6 on this report is included on each sheet, and (3) each sheet is numbered and the number of sheets is recorded at the top of this form.

(12/82) This Form (E00030) may be obtained from the Order Dept., ASME, 345 E.47th St., New York, N.Y. 10017

FORM NIS-2 (BACK)

9. Remarks Manufacturer's data reports are traceable by Exelon work order package.
Applicable Manufacturer's Data Reports to be attached

CERTIFICATE OF COMPLIANCE

We certify that the statements made in the report are correct and this replacement (repair or replacement) conforms to the rules of the ASME Code, Section XI.
Type Code Symbol Stamp NA

Certificate of Authorization No. NA Expiration Date NA

Signed J.H. Kramer (engineer) Date May 9, 2003
Owner or Owner's Designee, Title

CERTIFICATE OF INSERVICE INSPECTION

I, the undersigned, holding a valid commission issued by the National Board of Boiler and Pressure Vessel Inspectors and the State or Province of Pennsylvania and employed by HSBCT of Hartford, CT have inspected the components described in this Owner's Report during the period 19 JULY 02 to 12 JUNE 03, and state that to the best of my knowledge and belief, the Owner has performed examinations and taken corrective measures described in this Owner's Report in accordance with the requirements of the ASME Code, Section XI.

By signing this certificate neither the Inspector nor his employer makes any warranty, expressed or implied, concerning the examinations and corrective measures described in this Owner's Report. Furthermore, neither the Inspector nor his employer shall be liable in any manner for any personal injury or property damage or a loss of any kind arising from or connected with this inspection.

Inspector's Signature Commissions PA-2497 I,N & A
National Board, State, Province, and Endorsements

Date 12 JUNE 2003

(12/82)

FORM NIS-2 OWNER'S REPORT FOR REPAIRS OR REPLACEMENTS
As Required by the Provisions of the ASME Code Section XI

1. Owner Exelon Generation Company, LLC (Name) — Date May 5, 2003

200 Exelon Way, Kennett Square, PA 19348 (Address) — Sheet 1 of 2

2. Plant Limerick Generating Station (Name) — Unit 2

P.O. Box 2300, Sanatoga, PA 19464-2300 (Address) — Work Order No. R0900518 (Repair Organization P.O. No., Job No. etc.)

3. Work Performed by Exelon Nuclear (Name) — Type Code Symbol Stamp N/A
Authorization No. N/A

P.O. Box 2300, Sanatoga, PA 19464-2300 (Address) — Expiration Date N/A

4. Identification of System Nuclear Boiler, Feedwater (System 041) — Line No. DLA-206 — Valve 041-2F010B

5. (a) Applicable Construction Code ASME III 1971 Edition, Winter 1972 Addenda, N/A Code Case
(b) Applicable Edition of Section XI Utilized for Repairs or Replacements 1989

6. Identification of Components Repaired or Replaced and Replacement Components

Name of Component	Name of Manufacturer	Manufacturer Serial No.	National Board No.	Other Identification	Year Built	Repaired, Replaced, or Replacement	ASME Code Stamped (Yes or No)
24" Valve 041-2F010B Disc	Atwood & Morrill	Heat# R4270/3 Trace# 15892 S/N 1	N/A	* 114-98541 PO# 257796-348103	2001	REPLACEMENT	YES

* Traceability per Exelon stock code number.

7. Description of work: Valve disc replaced.
8. Tests conducted: Hydrostatic ☐ Pneumatic ☐ Nominal Operating Pressure ☒ ;
Other ☐ 1045 psi Test Temp. 168 °F.

NOTE: Supplemental sheets in form of lists, sketches, or drawings may be used, provided (1) size 8 1/2 in. x 11 in., (2) information in items 1 through 6 on this report is included on each sheet, and (3) each sheet is numbered and the number of sheets is recorded at the top of this form.

(12/82) This Form (E00030) may be obtained from the Order Dept., ASME, 345 E.47th St., New York, N.Y. 10017

FORM NIS-2 (BACK)

9. Remarks Manufacturer's Data Reports are traceable by work order package.
Applicable Manufacturer's Data Reports to be attached

Refer to Exelon design change ECR-LG-94-06839 for changes from original design.

CERTIFICATE OF COMPLIANCE

We certify that the statements made in the report are correct and this replacement (repair or replacement) conforms to the rules of the ASME Code, Section XI.
Type Code Symbol Stamp NA

Certificate of Authorization No. NA Expiration Date NA

Signed J.H. Kramer (engineer) Date May 5, 2003
Owner or Owner's Designee, Title

CERTIFICATE OF INSERVICE INSPECTION

I, the undersigned, holding a valid commission issued by the National Board of Boiler and Pressure Vessel Inspectors and the State or Province of Pennsylvania and employed by HSBCT of Hartford, CT have inspected the components described in this Owner's Report during the period 26 AUG 02 to 18 MAY 03, and state that to the best of my knowledge and belief, the Owner has performed examinations and taken corrective measures described in this Owner's Report in accordance with the requirements of the ASME Code, Section XI.

By signing this certificate neither the Inspector nor his employer makes any warranty, expressed or implied, concerning the examinations and corrective measures described in this Owner's Report. Furthermore, neither the Inspector nor his employer shall be liable in any manner for any personal injury or property damage or a loss of any kind arising from or connected with this inspection.

Inspector's Signature Commissions PA-2497 I,N & A
National Board, State, Province, and Endorsements

Date 18 MAY 2003

(12/82)

FORM NIS-2 OWNER'S REPORT FOR REPAIRS OR REPLACEMENTS
As Required by the Provisions of the ASME Code Section XI

1. Owner Exelon Genaration Co. LLC (Name) — Date June 3, 2003

200 Exelon Way, Kennett Square, PA 19348 (Address) — Sheet 1 of 2

2. Plant Limerick Generating Station (Name) — Unit 2

P.O. Box 2300, Sanatoga, PA 19464-2300 (Address) — Work Order No. R0869133 (Repair Organization P.O. No., Job No. etc.)

3. Work Performed by Exelon Nuclear (Name) — Type Code Symbol Stamp N/A
Authorization No. N/A

P.O. Box 2300, Sanatoga, PA 19464-2300 (Address) — Expiration Date N/A

4. Identification of System Nuclear Boiler (System 041) — Line No. APE-2MS PSV-041-2F013A

5. (a) Applicable Construction Code ASME III 1968 Edition, Summer 1970 Addenda, N/A Code Case
(b) Applicable Edition of Section XI Utilized for Repairs or Replacements 1989

6. Identification of Components Repaired or Replaced and Replacement Components

Name of Component	Name of Manufacturer	Manufacturer Serial No.	National Board No.	Other Identification	Year Built	Repaired, Replaced, or Replacement	ASME Code Stamped (Yes or No)
MSRV PILOT ASSEMBLY	TARGET ROCK	016	N/A	* 114-18880 PO# 180253	N/A	REPLACEMENT	YES
MSRV BODY	TARGET ROCK	180	N/A	* 114-18880 PO# 180253	N/A	REPLACEMENT	YES
MAIN DISC	TARGET ROCK	4600	N/A	* 114-76023 PO# 180253	2003	REPLACEMENT	YES

* Traceability per Exelon Part Code Number.

7. Description of Work: Replaced main steam relief valve main body with reworked body No.180 and pilot No.016

8. Tests conducted: Hydrostatic Pneumatic Nominal Operating Pressure ☒
Other __ Pressure 1045 psi Test Temp. 168 °F.

NOTE: Supplemental sheets in form of lists, sketches, or drawings may be used, provided (1) size 8 1/2 in. x 11 in., (2) information in items 1 through 6 on this report is included on each sheet, and (3) each sheet is numbered and the number of sheets is recorded at the top of this form.

(12/82) This Form (E00030) may be obtained from the Order Dept., ASME, 345 E.47th St., New York, N.Y. 10017

FORM NIS-2 (BACK)

9. Remarks Manufacturers Data Reports are traceable by Exelon Work Order package.
Applicable Manufacturer's Data Reports to be attached

CERTIFICATE OF COMPLIANCE

We certify that the statements made in the report are correct and this replacement (repair or replacement) conforms to the rules of the ASME Code, Section XI.
Type Code Symbol Stamp NA

Certificate of Authorization No. NA Expiration Date NA

Signed J.H. Kramer, Engineer Date June 3, 2003
Owner or Owner's Designee, Title

CERTIFICATE OF INSERVICE INSPECTION

I, the undersigned, holding a valid commission issued by the National Board of Boiler and Pressure Vessel Inspectors and the State or Province of Pennsylvania and employed by HSBCT of Hartford, CT have inspected the components described in this Owner's Report during the period 11 SEP 02 to 13 JUNE 03, and state that to the best of my knowledge and belief, the Owner has performed examinations and taken corrective measures described in this Owner's Report in accordance with the requirements of the ASME code, Section XI.

By signing this certificate neither the Inspector nor his employer makes any warranty, expressed or implied, concerning the examinations and corrective measures described in this Owner's Report. Furthermore, neither the Inspector nor his employer shall be liable in any manner for any personal injury or property damage or a loss of any kind arising from or connected with this inspection.

Inspector's Signature Commissions PA-2497 I,N & A
National Board, State, Province, and Endorsements

Date 13 JUNE 2003

(12/82)

FORM NIS-2 OWNER'S REPORT FOR REPAIRS OR REPLACEMENTS
As Required by the Provisions of the ASME Code Section XI

1. Owner Exelon Genaration Co, LLC (Name) — Date June 3, 2003

200 Exelon Way, Kennett Square, PA 19348 (Address) — Sheet 1 of 2

2. Plant Limerick Generating Station (Name) — Unit 2

P.O. Box 2300, Sanatoga, PA 19464-2300 (Address) — Work Order No. R0868142 (Repair Organization P.O. No., Job No. etc.)

3. Work Performed by Exelon Nuclear (Name) — Type Code Symbol Stamp N/A
Authorization No. N/A

P.O. Box 2300, Sanatoga, PA 19464-2300 (Address) — Expiration Date N/A

4. Identification of System Nuclear Boiler (System 041) — Line No. APE-2MS PSV-041-2F013B

5. (a) Applicable Construction Code ASME III 1968 Edition, Summer 1970 Addenda, N/A Code Case
(b) Applicable Edition of Section XI Utilized for Repairs or Replacements 1989

6. Identification of Components Repaired or Replaced and Replacement Components

Name of Component	Name of Manufacturer	Manufacturer Serial No.	National Board No.	Other Identification	Year Built	Repaired, Replaced, or Replacement	ASME Code Stamped (Yes or No)
MSRV PILOT ASSEMBLY	TARGET ROCK	021	N/A	* 114-18880 PO# 180253	N/A	REPLACEMENT	YES
MSRV BODY	TARGET ROCK	175	N/A	* 114-18880 PO# 180253	N/A	REPLACEMENT	YES

* Traceability per Exelon Part Code Number.

7. Description of Work: Replaced main steam relief valve main body with reworked body No.175 and pilot No.021

8. Tests conducted: Hydrostatic Pneumatic Nominal Operating Pressure [X]
Other __ Pressure 1045 psi Test Temp. 168 °F.

NOTE: Supplemental sheets in form of lists, sketches, or drawings may be used, provided (1) size 8 1/2 in. x 11 in., (2) information in items 1 through 6 on this report is included on each sheet, and (3) each sheet is numbered and the number of sheets is recorded at the top of this form.

(12/82) This Form (E00030) may be obtained from the Order Dept., ASME, 345 E.47th St., New York, N.Y. 10017

FORM NIS-2 (BACK)

9. Remarks None.
Applicable Manufacturer's Data Reports to be attached

CERTIFICATE OF COMPLIANCE

We certify that the statements made in the report are correct and this replacement (repair or replacement) conforms to the rules of the ASME Code, Section XI.
Type Code Symbol Stamp NA

Certificate of Authorization No. NA Expiration Date NA

Signed J.H. Kramer, Engineer Date June 3, 2003
Owner or Owner's Designee, Title

CERTIFICATE OF INSERVICE INSPECTION

I, the undersigned, holding a valid commission issued by the National Board of Boiler and Pressure Vessel Inspectors and the State or Province of Pennsylvania and employed by HSBCT of Hartford, CT have inspected the components described in this Owner's Report during the period 11 SEP 02 to 13 JUNE 03, and state that to the best of my knowledge and belief, the Owner has performed examinations and taken corrective measures described in this Owner's Report in accordance with the requirements of the ASME code, Section XI.

By signing this certificate neither the Inspector nor his employer makes any warranty, expressed or implied, concerning the examinations and corrective measures described in this Owner's Report. Furthermore, neither the Inspector nor his employer shall be liable in any manner for any personal injury or property damage or a loss of any kind arising from or connected with this inspection.

Inspector's Signature Commissions PA-2497 I,N & A
National Board, State, Province, and Endorsements

Date 13 JUNE 2003

(12/82)

FORM NIS-2 OWNER'S REPORT FOR REPAIRS OR REPLACEMENTS
As Required by the Provisions of the ASME Code Section XI

1. Owner Exelon Genaration Co. LLC (Name) — Date June 3, 2003

200 Exelon Way, Kennett Square, PA 19348 (Address) — Sheet 1 of 2

2. Plant Limerick Generating Station (Name) — Unit 2

P.O. Box 2300, Sanatoga, PA 19464-2300 (Address) — Work Order No. R0869139 (Repair Organization P.O. No., Job No. etc.)

3. Work Performed by Exelon Nuclear (Name) — Type Code Symbol Stamp N/A
Authorization No. N/A

P.O. Box 2300, Sanatoga, PA 19464-2300 (Address) — Expiration Date N/A

4. Identification of System Nuclear Boiler (System 041) — Line No. APE-2MS PSV-041-2F013C

5. (a) Applicable Construction Code ASME III 19 68 Edition, Summer 1970 Addenda, N/A Code Case
(b) Applicable Edition of Section XI Utilized for Repairs or Replacements 19 89

6. Identification of Components Repaired or Replaced and Replacement Components

Name of Component	Name of Manufacturer	Manufacturer Serial No.	National Board No.	Other Identification	Year Built	Repaired, Replaced, or Replacement	ASME Code Stamped (Yes or No)
MSRV PILOT ASSEMBLY	TARGET ROCK	022	N/A	* 114-18880 PO# 180253	N/A	REPLACEMENT	YES
MSRV BODY	TARGET ROCK	150	N/A	* 114-18880 PO# 180253	N/A	REPLACEMENT	YES

* Traceability per Exelon Part Code Number.

7. Description of Work: Replaced main steam relief valve main body with reworked body No.150 and pilot No.022

8. Tests conducted: Hydrostatic Pneumatic Nominal Operating Pressure [X]
Other __ Pressure 1045 psi Test Temp. 168 °F.

NOTE: Supplemental sheets in form of lists, sketches, or drawings may be used, provided (1) size 8 1/2 in. x 11 in., (2) information in items 1 through 6 on this report is included on each sheet, and (3) each sheet is numbered and the number of sheets is recorded at the top of this form.

(12/82) This Form (E00030) may be obtained from the Order Dept., ASME, 345 E.47th St., New York, N.Y. 10017

FORM NIS-2 (BACK)

9. Remarks None.
Applicable Manufacturer's Data Reports to be attached

CERTIFICATE OF COMPLIANCE

We certify that the statements made in the report are correct and this replacement conforms to the rules of the ASME Code, Section XI.
repair or replacement

Type Code Symbol Stamp NA

Certificate of Authorization No. NA Expiration Date NA

Signed J.H. Kramer, Engineer Date June 3, 2003
Owner or Owner's Designee, Title

CERTIFICATE OF INSERVICE INSPECTION

I, the undersigned, holding a valid commission issued by the National Board of Boiler and Pressure Vessel Inspectors and the State or Province of Pennsylvania and employed by HSBCT of Hartford, CT have inspected the components described in this Owner's Report during the period 11 SEP 02 to 13 JUNE 03, and state that to the best of my knowledge and belief, the Owner has performed examinations and taken corrective measures described in this Owner's Report in accordance with the requirements of the ASME code, Section XI.

By signing this certificate neither the Inspector nor his employer makes any warranty, expressed or implied, concerning the examinations and corrective measures described in this Owner's Report. Furthermore, neither the Inspector nor his employer shall be liable in any manner for any personal injury or property damage or a loss of any kind arising from or connected with this inspection.

Inspector's Signature Commissions PA-2497 I,N & A
National Board, State, Province, and Endorsements

Date 13 JUNE ~~18~~ 2003

(12/82)

FORM NIS-2 OWNER'S REPORT FOR REPAIRS OR REPLACEMENTS
As Required by the Provisions of the ASME Code Section XI

1. Owner Exelon Generation Co. LLC (Name) — Date June 3, 2003

200 Exelon Way, Kennett Square, PA 19348 (Address) — Sheet 1 of 2

2. Plant Limerick Generating Station (Name) — Unit 2

P.O. Box 2300, Sanatoga, PA 19464-2300 (Address) — Work Order No. R0669138 (Repair Organization P.O. No., Job No. etc.)

3. Work Performed by Exelon Nuclear (Name) — Type Code Symbol Stamp N/A
Authorization No. N/A

P.O. Box 2300, Sanatoga, PA 19464-2300 (Address) — Expiration Date N/A

4. Identification of System Nuclear Boiler (System 041) — Line No. APE-2MS PSV-041-2F013D

5. (a) Applicable Construction Code ASME III 1968 Edition, Summer 1970 Addenda, N/A Code Case
(b) Applicable Edition of Section XI Utilized for Repairs or Replacements 1989

6. Identification of Components Repaired or Replaced and Replacement Components

Name of Component	Name of Manufacturer	Manufacturer Serial No.	National Board No.	Other Identification	Year Built	Repaired, Replaced, or Replacement	ASME Code Stamped (Yes or No)
MSRV PILOT ASSEMBLY	TARGET ROCK	017	N/A	* 114-18879 PO# 180253	N/A	REPLACEMENT	YES
MSRV BODY	TARGET ROCK	190	N/A	* 114-18879 PO# 180253	N/A	REPLACEMENT	YES

* Traceability per Exelon Part Code Number.

7. Description of Work: Replaced main steam relief valve main body with reworked body No.190 and pilot No.017

8. Tests conducted: Hydrostatic Pneumatic Nominal Operating Pressure [X]
Other __ Pressure 1045 psi Test Temp. 168 °F.

NOTE: Supplemental sheets in form of lists, sketches, or drawings may be used, provided (1) size 8 1/2 in. x 11 in., (2) information in items 1 through 6 on this report is included on each sheet, and (3) each sheet is numbered and the number of sheets is recorded at the top of this form.

(12/82) This Form (E00030) may be obtained from the Order Dept., ASME, 345 E.47th St., New York, N.Y. 10017

FORM NIS-2 (BACK)

9. Remarks Relief valve inlet flange repaired by welding under Exelon work order C0203435.
Applicable Manufacturer's Data Reports to be attached

CERTIFICATE OF COMPLIANCE

We certify that the statements made in the report are correct and this replacement (repair or replacement) conforms to the rules of the ASME Code, Section XI.
Type Code Symbol Stamp NA

Certificate of Authorization No. NA Expiration Date NA

Signed J.H. Kramer, Engineer Date June 3, 2003
Owner or Owner's Designee, Title

CERTIFICATE OF INSERVICE INSPECTION

I, the undersigned, holding a valid commission issued by the National Board of Boiler and Pressure Vessel Inspectors and the State or Province of Pennsylvania and employed by HSBCT of Hartford, CT have inspected the components described in this Owner's Report during the period 11 SEP 02 to 13 JUNE 03, and state that to the best of my knowledge and belief, the Owner has performed examinations and taken corrective measures described in this Owner's Report in accordance with the requirements of the ASME code, Section XI.

By signing this certificate neither the Inspector nor his employer makes any warranty, expressed or implied, concerning the examinations and corrective measures described in this Owner's Report. Furthermore, neither the Inspector nor his employer shall be liable in any manner for any personal injury or property damage or a loss of any kind arising from or connected with this inspection.

Inspector's Signature Commissions PA-2497 I,N & A
National Board, State, Province, and Endorsements

Date 13 JUNE 2003

(12/82)

FORM NIS-2 OWNER'S REPORT FOR REPAIRS OR REPLACEMENTS
As Required by the Provisions of the ASME Code Section XI

1. Owner Exelon Genaration Co. LLC (Name) — Date June 3, 2003

200 Exelon Way, Kennett Square, PA 19348 (Address) — Sheet 1 of 2

2. Plant Limerick Generating Station (Name) — Unit 2

P.O. Box 2300, Sanatoga, PA 19464-2300 (Address) — Work Order No. R0868115 (Repair Organization P.O. No., Job No. etc.)

3. Work Performed by Exelon Nuclear (Name) — Type Code Symbol Stamp N/A
Authorization No. N/A

P.O. Box 2300, Sanatoga, PA 19464-2300 (Address) — Expiration Date N/A

4. Identification of System Nuclear Boiler (System 041) — Line No. APE-2MS PSV-041-2F013E

5. (a) Applicable Construction Code ASME III 1968 Edition, Summer 1970 Addenda, N/A Code Case
(b) Applicable Edition of Section XI Utilized for Repairs or Replacements 1989

6. Identification of Components Repaired or Replaced and Replacement Components

Name of Component	Name of Manufacturer	Manufacturer Serial No.	National Board No.	Other Identification	Year Built	Repaired, Replaced, or Replacement	ASME Code Stamped (Yes or No)
MSRV PILOT ASSEMBLY	TARGET ROCK	029	N/A	* 114-18879 PO# 180253	N/A	REPLACEMENT	YES
MSRV BODY	TARGET ROCK	176	N/A	* 114-18879 PO# 180253	N/A	REPLACEMENT	YES

* Traceability per Exelon Part Code Number.

7. Description of Work: Replaced main steam relief valve main body with reworked body No.176 and pilot No.029

8. Tests conducted: Hydrostatic Pneumatic Nominal Operating Pressure [X]
Other __ Pressure 1045 psi Test Temp. 168 °F.

NOTE: Supplemental sheets in form of lists, sketches, or drawings may be used, provided (1) size 8 1/2 in. x 11 in., (2) information in items 1 through 6 on this report is included on each sheet, and (3) each sheet is numbered and the number of sheets is recorded at the top of this form.

(12/82) This Form (E00030) may be obtained from the Order Dept., ASME, 345 E.47th St., New York, N.Y. 10017

FORM NIS-2 (BACK)

9. Remarks None.
Applicable Manufacturer's Data Reports to be attached

CERTIFICATE OF COMPLIANCE

We certify that the statements made in the report are correct and this replacement conforms to the rules of the ASME Code, Section XI.
repair or replacement

Type Code Symbol Stamp NA

Certificate of Authorization No. NA Expiration Date NA

Signed J.H. Kramer, Engineer Date June 3, 2003
Owner or Owner's Designee, Title

CERTIFICATE OF INSERVICE INSPECTION

I, the undersigned, holding a valid commission issued by the National Board of Boiler and Pressure Vessel Inspectors and the State or Province of Pennsylvania and employed by HSBCT of Hartford, CT have inspected the components described in this Owner's Report during the period 11 SEP 02 to 13 JUNE 03, and state that to the best of my knowledge and belief, the Owner has performed examinations and taken corrective measures described in this Owner's Report in accordance with the requirements of the ASME code, Section XI.

By signing this certificate neither the Inspector nor his employer makes any warranty, expressed or implied, concerning the examinations and corrective measures described in this Owner's Report. Furthermore, neither the Inspector nor his employer shall be liable in any manner for any personal injury or property damage or a loss of any kind arising from or connected with this inspection.

Inspector's Signature Commissions PA-2497 I,N & A
National Board, State, Province, and Endorsements

Date 13 JUNE 18 2003

(12/82)

FORM NIS-2 OWNER'S REPORT FOR REPAIRS OR REPLACEMENTS
As Required by the Provisions of the ASME Code Section XI

1. Owner Exelon Genaration Co. LLC (Name) — Date June 3, 2003

200 Exelon Way, Kennett Square, PA 19348 (Address) — Sheet 1 of 2

2. Plant Limerick Generating Station (Name) — Unit 2

P.O. Box 2300, Sanatoga, PA 19464-2300 (Address) — Work Order No. R0869044 (Repair Organization P.O. No., Job No. etc.)

3. Work Performed by Exelon Nuclear (Name) — Type Code Symbol Stamp N/A
Authorization No. N/A

P.O. Box 2300, Sanatoga, PA 19464-2300 (Address) — Expiration Date N/A

4. Identification of System Nuclear Boiler (System 041) — Line No. APE-2MS PSV-041-2F013F

5. (a) Applicable Construction Code ASME III 1968 Edition, Summer 1970 Addenda, N/A Code Case
(b) Applicable Edition of Section XI Utilized for Repairs or Replacements 1989

6. Identification of Components Repaired or Replaced and Replacement Components

Name of Component	Name of Manufacturer	Manufacturer Serial No.	National Board No.	Other Identification	Year Built	Repaired, Replaced, or Replacement	ASME Code Stamped (Yes or No)
MSRV PILOT ASSEMBLY	TARGET ROCK	027	N/A	* 114-18880 PO# 180253	N/A	REPLACEMENT	YES
MSRV BODY	TARGET ROCK	174	N/A	* 114-18880 PO# 180253	N/A	REPLACEMENT	YES

* Traceability per Exelon Part Code Number.

7. Description of Work: Replaced main steam relief valve main body with reworked body No.174 and pilot No.027

8. Tests conducted: Hydrostatic Pneumatic Nominal Operating Pressure [X]
Other __ Pressure 1045 psi Test Temp. 168 °F.

NOTE: Supplemental sheets in form of lists, sketches, or drawings may be used, provided (1) size 8 1/2 in. x 11 in., (2) information in items 1 through 6 on this report is included on each sheet, and (3) each sheet is numbered and the number of sheets is recorded at the top of this form.

(12/82) This Form (E00030) may be obtained from the Order Dept., ASME, 345 E.47th St., New York, N.Y. 10017

FORM NIS-2 (BACK)

9. Remarks None.
Applicable Manufacturer's Data Reports to be attached

CERTIFICATE OF COMPLIANCE

We certify that the statements made in the report are correct and this replacement (repair or replacement) conforms to the rules of the ASME Code, Section XI.
Type Code Symbol Stamp NA

Certificate of Authorization No. NA Expiration Date NA

Signed J.H. Kramer, Engineer Date June 3, 2003
Owner or Owner's Designee, Title

CERTIFICATE OF INSERVICE INSPECTION

I, the undersigned, holding a valid commission issued by the National Board of Boiler and Pressure Vessel Inspectors and the State or Province of Pennsylvania and employed by HSBCT of Hartford, CT have inspected the components described in this Owner's Report during the period 11 SEP 02 to 13 JUNE 03, and state that to the best of my knowledge and belief, the Owner has performed examinations and taken corrective measures described in this Owner's Report in accordance with the requirements of the ASME code, Section XI.

By signing this certificate neither the Inspector nor his employer makes any warranty, expressed or implied, concerning the examinations and corrective measures described in this Owner's Report. Furthermore, neither the Inspector nor his employer shall be liable in any manner for any personal injury or property damage or a loss of any kind arising from or connected with this inspection.

Inspector's Signature Commissions PA-2497 I,N & A
National Board, State, Province, and Endorsements

Date 13 JUNE 2003

(12/82)

FORM NIS-2 OWNER'S REPORT FOR REPAIRS OR REPLACEMENTS
As Required by the Provisions of the ASME Code Section XI

1. Owner Exelon Genaration Co. LLC (Name) — Date June 3, 2003

200 Exelon Way, Kennett Square, PA 19348 (Address) — Sheet 1 of 2

2. Plant Limerick Generating Station (Name) — Unit 2

P.O. Box 2300, Sanatoga, PA 19464-2300 (Address) — Work Order No. R0869049 (Repair Organization P.O. No., Job No. etc.)

3. Work Performed by Exelon Nuclear (Name) — Type Code Symbol Stamp N/A
Authorization No. N/A

P.O. Box 2300, Sanatoga, PA 19464-2300 (Address) — Expiration Date N/A

4. Identification of System Nuclear Boiler (System 041) — Line No. APE-2MS PSV-041-2F013G

5. (a) Applicable Construction Code ASME III 19 68 Edition, Summer 1970 Addenda, N/A Code Case
(b) Applicable Edition of Section XI Utilized for Repairs or Replacements 19 89

6. Identification of Components Repaired or Replaced and Replacement Components

Name of Component	Name of Manufacturer	Manufacturer Serial No.	National Board No.	Other Identification	Year Built	Repaired, Replaced, or Replacement	ASME Code Stamped (Yes or No)
MSRV PILOT ASSEMBLY	TARGET ROCK	015	N/A	* 114-18880 PO# 180253	N/A	REPLACEMENT	YES
MSRV BODY	TARGET ROCK	193	N/A	* 114-18880 PO# 180253	N/A	REPLACEMENT	YES
MAIN DISC	TARGET ROCK	4550	N/A	* 114-76023 PO# 350395-348015	1992	REPLACEMENT	YES
MAIN SEAT	TARGET ROCK	55	N/A	* 114-76024 PO# 204066-348080	N/A	REPLACEMENT	NO
(1) 1-1/8" SPLINE BOLT	U.S. BOLT	HEAT No. 13350 Trace No. 1WB	N/A	TARGET ROCK PART No. 204842-2	N/A	REPLACEMENT	NO
(1) 1-1/8" SPLINE NUT	ENERGY STEEL	HEAT No. 2-3471LC LOT No. CEY5	N/A	TARGET ROCK PART No. 204843-1	N/A	REPLACEMENT	NO

* Traceability per Exelon Part Code Number.

7. Description of Work: Replaced main steam relief valve with reworked body No.193 and pilot No.015.

8. Tests conducted: Hydrostatic Pneumatic Nominal Operating Pressure [X]
Other __ Pressure 1045 psi Test Temp. 168 °F.

NOTE: Supplemental sheets in form of lists, sketches, or drawings may be used, provided (1) size 8 1/2 in. x 11 in., (2) information in items 1 through 6 on this report is included on each sheet, and (3) each sheet is numbered and the number of sheets is recorded at the top of this form.

(12/82) This Form (E00030) may be obtained from the Order Dept., ASME, 345 E.47th St., New York, N.Y. 10017

FORM NIS-2 (BACK)

9. Remarks Manufacturers Data Reports are traceable by Exelon Work Order package.
Applicable Manufacturer's Data Reports to be attached

CERTIFICATE OF COMPLIANCE

We certify that the statements made in the report are correct and this replacement (repair or replacement) conforms to the rules of the ASME Code, Section XI.
Type Code Symbol Stamp NA

Certificate of Authorization No. NA Expiration Date NA

Signed J.H. Kramer, Engineer Date June 3, 2003
Owner or Owner's Designee, Title

CERTIFICATE OF INSERVICE INSPECTION

I, the undersigned, holding a valid commission issued by the National Board of Boiler and Pressure Vessel Inspectors and the State or Province of Pennsylvania and employed by HSBCT of Hartford, CT have inspected the components described in this Owner's Report during the period 11 SEP 02 to 13 JUNE 03, and state that to the best of my knowledge and belief, the Owner has performed examinations and taken corrective measures described in this Owner's Report in accordance with the requirements of the ASME code, Section XI.

By signing this certificate neither the Inspector nor his employer makes any warranty, expressed or implied, concerning the examinations and corrective measures described in this Owner's Report. Furthermore, neither the Inspector nor his employer shall be liable in any manner for any personal injury or property damage or a loss of any kind arising from or connected with this inspection.

Inspector's Signature Commissions PA-2497 I,N & A
National Board, State, Province, and Endorsements

Date 13 JUNE 18 2003

(12/82)

FORM NIS-2 OWNER'S REPORT FOR REPAIRS OR REPLACEMENTS
As Required by the Provisions of the ASME Code Section XI

1. Owner Exelon Genaration Co. LLC (Name) — Date June 3, 2003

200 Exelon Way, Kennett Square, PA 19348 (Address) — Sheet 1 of 2

2. Plant Limerick Generating Station (Name) — Unit 2

P.O. Box 2300, Sanatoga, PA 19464-2300 (Address) — Work Order No. R0869131 (Repair Organization P.O. No., Job No. etc.)

3. Work Performed by Exelon Nuclear (Name) — Type Code Symbol Stamp N/A
Authorization No. N/A

P.O. Box 2300, Sanatoga, PA 19464-2300 (Address) — Expiration Date N/A

4. Identification of System Nuclear Boiler (System 041) — Line No. APE-2MS PSV-041-2F013H

5. (a) Applicable Construction Code ASME III 1968 Edition, Summer 1970 Addenda, N/A Code Case
(b) Applicable Edition of Section XI Utilized for Repairs or Replacements 1989

6. Identification of Components Repaired or Replaced and Replacement Components

Name of Component	Name of Manufacturer	Manufacturer Serial No.	National Board No.	Other Identification	Year Built	Repaired, Replaced, or Replacement	ASME Code Stamped (Yes or No)
MSRV PILOT ASSEMBLY	TARGET ROCK	018	N/A	* 114-03966 PO# 180253	N/A	REPLACEMENT	YES
MSRV BODY	TARGET ROCK	170	N/A	* 114-03966 PO# 180253	N/A	REPLACEMENT	YES
(2) 1-1/8" SPLINE BOLT	U.S. BOLT	HEAT No. 13350 Trace No. 1WB	N/A	TARGET ROCK PART No. 204842-2	N/A	REPLACEMENT	NO
(2) 1-1/8" SPLINE NUT	ENERGY STEEL	HEAT No. 2-3471LC LOT No. CEY5	N/A	TARGET ROCK PART No. 204843-1	N/A	REPLACEMENT	NO

* Traceability per Exelon Part Code Number.

7. Description of Work: Replaced main steam relief valve main body with reworked body No.170 and pilot No.018

8. Tests conducted: Hydrostatic Pneumatic Nominal Operating Pressure [X]
Other __ Pressure 1045 psi Test Temp. 168 °F.

NOTE: Supplemental sheets in form of lists, sketches, or drawings may be used, provided (1) size 8 1/2 in. x 11 in., (2) information in items 1 through 6 on this report is included on each sheet, and (3) each sheet is numbered and the number of sheets is recorded at the top of this form.

(12/82) This Form (E00030) may be obtained from the Order Dept., ASME, 345 E.47th St., New York, N.Y. 10017

FORM NIS-2 (BACK)

9. Remarks Relief valve inlet flange repaired by welding under Exelon work order C0204049.
Applicable Manufacturer's Data Reports to be attached

CERTIFICATE OF COMPLIANCE

We certify that the statements made in the report are correct and this replacement conforms to the rules of the ASME Code, Section XI.
repair or replacement

Type Code Symbol Stamp NA

Certificate of Authorization No. NA Expiration Date NA

Signed [signature] J.H. Kramer, Engineer Date June 3, 2003
Owner or Owner's Designee, Title

CERTIFICATE OF INSERVICE INSPECTION

I, the undersigned, holding a valid commission issued by the National Board of Boiler and Pressure Vessel Inspectors and the State or Province of Pennsylvania and employed by HSBCT of Hartford, CT have inspected the components described in this Owner's Report during the period 11 SEP 02 to 13 JUNE 03, and state that to the best of my knowledge and belief, the Owner has performed examinations and taken corrective measures described in this Owner's Report in accordance with the requirements of the ASME code, Section XI.

By signing this certificate neither the Inspector nor his employer makes any warranty, expressed or implied, concerning the examinations and corrective measures described in this Owner's Report. Furthermore, neither the Inspector nor his employer shall be liable in any manner for any personal injury or property damage or a loss of any kind arising from or connected with this inspection.

[signature] Commissions PA-2497 I,N & A
Inspector's Signature National Board, State, Province, and Endorsements

Date 13 JUNE ~~15~~ 2003

(12/82)

FORM NIS-2 OWNER'S REPORT FOR REPAIRS OR REPLACEMENTS
As Required by the Provisions of the ASME Code Section XI

1. Owner Exelon Genaration Co. LLC (Name) — Date June 3, 2003

200 Exelon Way, Kennett Square, PA 19348 (Address) — Sheet 1 of 2

2. Plant Limerick Generating Station (Name) — Unit 2

P.O. Box 2300, Sanatoga, PA 19464-2300 (Address) — Work Order No. R0869137 (Repair Organization P.O. No., Job No. etc.)

3. Work Performed by Exelon Nuclear (Name) — Type Code Symbol Stamp N/A
Authorization No. N/A

P.O. Box 2300, Sanatoga, PA 19464-2300 (Address) — Expiration Date N/A

4. Identification of System Nuclear Boiler (System 041) — Line No. APE-2MS PSV-041-2F013J

5. (a) Applicable Construction Code ASME III 19 68 Edition, Summer 1970 Addenda, N/A Code Case
(b) Applicable Edition of Section XI Utilized for Repairs or Replacements 19 89

6. Identification of Components Repaired or Replaced and Replacement Components

Name of Component	Name of Manufacturer	Manufacturer Serial No.	National Board No.	Other Identification	Year Built	Repaired, Replaced, or Replacement	ASME Code Stamped (Yes or No)
MSRV PILOT ASSEMBLY	TARGET ROCK	040	N/A	* 114-03966 PO# 180253	N/A	REPLACEMENT	YES
MSRV BODY	TARGET ROCK	181	N/A	* 114-03966 PO# 180253	N/A	REPLACEMENT	YES

* Traceability per Exelon Part Code Number.

7. Description of Work: Replaced main steam relief valve main body with reworked body No.181 and pilot No.040

8. Tests conducted: Hydrostatic Pneumatic Nominal Operating Pressure [X]
Other __ Pressure 1045 psi Test Temp. 168 °F.

NOTE: Supplemental sheets in form of lists, sketches, or drawings may be used, provided (1) size 8 1/2 in. x 11 in., (2) information in items 1 through 6 on this report is included on each sheet, and (3) each sheet is numbered and the number of sheets is recorded at the top of this form.

(12/82) This Form (E00030) may be obtained from the Order Dept., ASME, 345 E.47th St., New York, N.Y. 10017

FORM NIS-2 (BACK)

9. Remarks None.
Applicable Manufacturer's Data Reports to be attached

CERTIFICATE OF COMPLIANCE

We certify that the statements made in the report are correct and this replacement conforms to the rules of the ASME Code, Section XI.
repair or replacement

Type Code Symbol Stamp NA

Certificate of Authorization No. NA Expiration Date NA

Signed J.H. Kramer, Engineer Date June 3, 2003
Owner or Owner's Designee, Title

CERTIFICATE OF INSERVICE INSPECTION

I, the undersigned, holding a valid commission issued by the National Board of Boiler and Pressure Vessel Inspectors and the State or Province of Pennsylvania and employed by HSBCT of Hartford, CT have inspected the components described in this Owner's Report during the period 11 SEP 02 to 13 JUNE 03, and state that to the best of my knowledge and belief, the Owner has performed examinations and taken corrective measures described in this Owner's Report in accordance with the requirements of the ASME code, Section XI.

By signing this certificate neither the Inspector nor his employer makes any warranty, expressed or implied, concerning the examinations and corrective measures described in this Owner's Report. Furthermore, neither the Inspector nor his employer shall be liable in any manner for any personal injury or property damage or a loss of any kind arising from or connected with this inspection.

Inspector's Signature Commissions PA-2497 I,N & A
National Board, State, Province, and Endorsements

Date 13 JUNE 2003

(12/82)

FORM NIS-2 OWNER'S REPORT FOR REPAIRS OR REPLACEMENTS
As Required by the Provisions of the ASME Code Section XI

1. Owner Exelon Genaration Co. LLC (Name) — Date June 3, 2003

200 Exelon Way, Kennett Square, PA 19348 (Address) — Sheet 1 of 2

2. Plant Limerick Generating Station (Name) — Unit 2

P.O. Box 2300, Sanatoga, PA 19464-2300 (Address) — Work Order No. R0869129 (Repair Organization P.O. No., Job No. etc.)

3. Work Performed by Exelon Nuclear (Name) — Type Code Symbol Stamp N/A
Authorization No. N/A

P.O. Box 2300, Sanatoga, PA 19464-2300 (Address) — Expiration Date N/A

4. Identification of System Nuclear Boiler (System 041) — Line No. APE-2MS PSV-041-2F013K

5. (a) Applicable Construction Code ASME III 1968 Edition, Summer 1970 Addenda, N/A Code Case
(b) Applicable Edition of Section XI Utilized for Repairs or Replacements 1989

6. Identification of Components Repaired or Replaced and Replacement Components

Name of Component	Name of Manufacturer	Manufacturer Serial No.	National Board No.	Other Identification	Year Built	Repaired, Replaced, or Replacement	ASME Code Stamped (Yes or No)
MSRV PILOT ASSEMBLY	TARGET ROCK	020	N/A	* 114-18879 PO# 180253	N/A	REPLACEMENT	YES
MSRV BODY	TARGET ROCK	148	N/A	* 114-18879 PO# 180253	N/A	REPLACEMENT	YES

* Traceability per Exelon Part Code Number.

7. Description of Work: Replaced main steam relief valve main body with reworked body No.148 and pilot No.020

8. Tests conducted: Hydrostatic Pneumatic Nominal Operating Pressure ☒
Other __ Pressure 1045 psi Test Temp. 168 °F.

NOTE: Supplemental sheets in form of lists, sketches, or drawings may be used, provided (1) size 8 1/2 in. x 11 in., (2) information in items 1 through 6 on this report is included on each sheet, and (3) each sheet is numbered and the number of sheets is recorded at the top of this form.

(12/82) This Form (E00030) may be obtained from the Order Dept., ASME, 345 E.47th St., New York, N.Y. 10017

FORM NIS-2 (BACK)

9. Remarks None.
Applicable Manufacturer's Data Reports to be attached

CERTIFICATE OF COMPLIANCE

We certify that the statements made in the report are correct and this replacement (repair or replacement) conforms to the rules of the ASME Code, Section XI.
Type Code Symbol Stamp NA

Certificate of Authorization No. NA Expiration Date NA

Signed J.H. Kramer, Engineer Date June 3, 2003
Owner or Owner's Designee, Title

CERTIFICATE OF INSERVICE INSPECTION

I, the undersigned, holding a valid commission issued by the National Board of Boiler and Pressure Vessel Inspectors and the State or Province of Pennsylvania and employed by HSBCT of Hartford, CT have inspected the components described in this Owner's Report during the period 11 SEP 02 to 13 JUNE 03, and state that to the best of my knowledge and belief, the Owner has performed examinations and taken corrective measures described in this Owner's Report in accordance with the requirements of the ASME code, Section XI.

By signing this certificate neither the Inspector nor his employer makes any warranty, expressed or implied, concerning the examinations and corrective measures described in this Owner's Report. Furthermore, neither the Inspector nor his employer shall be liable in any manner for any personal injury or property damage or a loss of any kind arising from or connected with this inspection.

Inspector's Signature Commissions PA-2497 I,N & A
National Board, State, Province, and Endorsements

Date 13 JUNE 2003

(12/82)

FORM NIS-2 OWNER'S REPORT FOR REPAIRS OR REPLACEMENTS
As Required by the Provisions of the ASME Code Section XI

1. Owner Exelon Genaration Co, LLC (Name) — Date June 3, 2003

200 Exelon Way, Kennett Square, PA 19348 (Address) — Sheet 1 of 2

2. Plant Limerick Generating Station (Name) — Unit 2

P.O. Box 2300, Sanatoga, PA 19464-2300 (Address) — Work Order No. R0869135 (Repair Organization P.O. No., Job No. etc.)

3. Work Performed by Exelon Nuclear (Name) — Type Code Symbol Stamp N/A
Authorization No. N/A

P.O. Box 2300, Sanatoga, PA 19464-2300 (Address) — Expiration Date N/A

4. Identification of System Nuclear Boiler (System 041) — Line No. APE-2MS PSV-041-2F013L

5. (a) Applicable Construction Code ASME III 1968 Edition, Summer 1970 Addenda, N/A Code Case
(b) Applicable Edition of Section XI Utilized for Repairs or Replacements 1989

6. Identification of Components Repaired or Replaced and Replacement Components

Name of Component	Name of Manufacturer	Manufacturer Serial No.	National Board No.	Other Identification	Year Built	Repaired, Replaced, or Replacement	ASME Code Stamped (Yes or No)
MSRV Pilot Assembly	Target Rock	025	N/A	* 114-03966 PO# 180253	N/A	Replacement	Yes
MSRV Body	Target Rock	151	N/A	* 114-03966 PO# 180253	N/A	Replacement	Yes
(2) 1-3/8" MSRV inlet flange studs	Cardinal Industrial	Heat# 8869139 Trace code 'D9'	N/A	* 114-93783 PO# LS628644	N/A	Replacement	No
(4) 1-3/8" MSRV inlet flange nuts	Allied Nut & Bolt	Heat# Q2293A Trace code 216	N/A	* 114-93784 PO# LS669338	N/A	Replacement	No
(14) 1" MSRV outlet flange studs	NOVA Machine	Heat# 13853 Trace# C574 & C575	N/A	PO#180864-348270	N/A	Replacement	No
(21) 1" MSRV outlet flange nuts	NOVA Machine	Heat# 12750 Trace# C663	N/A	* 114-76528 PO#180864-348308	N/A	Replacement	No

* Traceability per Exelon Part Code Number.

7. Description of Work: *Replaced main steam relief valve main body with reworked body No.151 and pilot No.025*

8. Tests conducted: Hydrostatic Pneumatic Nominal Operating Pressure ☒
Other __ Pressure 1045 psi Test Temp. 168 °F.

NOTE: Supplemental sheets in form of lists, sketches, or drawings may be used, provided (1) size 8 1/2 in. x 11 in., (2) information in items 1 through 6 on this report is included on each sheet, and (3) each sheet is numbered and the number of sheets is recorded at the top of this form.

(12/82) This Form (E00030) may be obtained from the Order Dept., ASME, 345 E.47th St., New York, N.Y. 10017

FORM NIS-2 (BACK)

9. Remarks None.
Applicable Manufacturer's Data Reports to be attached

CERTIFICATE OF COMPLIANCE

We certify that the statements made in the report are correct and this replacement (repair or replacement) conforms to the rules of the ASME Code, Section XI.
Type Code Symbol Stamp NA

Certificate of Authorization No. NA Expiration Date NA

Signed J.H. Kramer, Engineer Date June 3, 2003
Owner or Owner's Designee, Title

CERTIFICATE OF INSERVICE INSPECTION

I, the undersigned, holding a valid commission issued by the National Board of Boiler and Pressure Vessel Inspectors and the State or Province of Pennsylvania and employed by HSBCT of Hartford, CT have inspected the components described in this Owner's Report during the period 11 SEP 02 to 13 JUNE 03, and state that to the best of my knowledge and belief, the Owner has performed examinations and taken corrective measures described in this Owner's Report in accordance with the requirements of the ASME code, Section XI.

By signing this certificate neither the Inspector nor his employer makes any warranty, expressed or implied, concerning the examinations and corrective measures described in this Owner's Report. Furthermore, neither the Inspector nor his employer shall be liable in any manner for any personal injury or property damage or a loss of any kind arising from or connected with this inspection.

Inspector's Signature Commissions PA-2497 I,N & A
National Board, State, Province, and Endorsements

Date 13 JUNE 2003

(12/82)

FORM NIS-2 OWNER'S REPORT FOR REPAIRS OR REPLACEMENTS
As Required by the Provisions of the ASME Code Section XI

1. Owner Exelon Genaration Co. LLC (Name) — Date June 3, 2003

200 Exelon Way, Kennett Square, PA 19348 (Address) — Sheet 1 of 2

2. Plant Limerick Generating Station (Name) — Unit 2

P.O. Box 2300, Sanatoga, PA 19464-2300 (Address) — Work Order No. R0864454 (Repair Organization P.O. No., Job No. etc.)

3. Work Performed by Exelon Nuclear (Name) — Type Code Symbol Stamp N/A
Authorization No. N/A

P.O. Box 2300, Sanatoga, PA 19464-2300 (Address) — Expiration Date N/A

4. Identification of System Nuclear Boiler (System 041) — Line No. APE-2MS PSV-041-2F013M

5. (a) Applicable Construction Code ASME III 1968 Edition, Summer 1970 Addenda, N/A Code Case
(b) Applicable Edition of Section XI Utilized for Repairs or Replacements 1989

6. Identification of Components Repaired or Replaced and Replacement Components

Name of Component	Name of Manufacturer	Manufacturer Serial No.	National Board No.	Other Identification	Year Built	Repaired, Replaced, or Replacement	ASME Code Stamped (Yes or No)
MSRV PILOT ASSEMBLY	TARGET ROCK	023	N/A	* 114-18879 PO# 180253	N/A	REPLACEMENT	YES
MSRV BODY	TARGET ROCK	189	N/A	* 114-18879 PO# 180253	N/A	REPLACEMENT	YES

* Traceability per Exelon Part Code Number.

7. Description of Work: Replaced main steam relief valve main body with reworked body No.189 and pilot No.023

8. Tests conducted: Hydrostatic Pneumatic Nominal Operating Pressure [X]
Other __ Pressure 1045 psi Test Temp. 168 °F.

NOTE: Supplemental sheets in form of lists, sketches, or drawings may be used, provided (1) size 8 1/2 in. x 11 in., (2) information in items 1 through 6 on this report is included on each sheet, and (3) each sheet is numbered and the number of sheets is recorded at the top of this form.

(12/82) This Form (E00030) may be obtained from the Order Dept., ASME, 345 E.47th St., New York, N.Y. 10017

FORM NIS-2 (BACK)

9. Remarks None.
Applicable Manufacturer's Data Reports to be attached

CERTIFICATE OF COMPLIANCE

We certify that the statements made in the report are correct and this replacement (repair or replacement) conforms to the rules of the ASME Code, Section XI.
Type Code Symbol Stamp NA

Certificate of Authorization No. NA Expiration Date NA

Signed J.H. Kramer, Engineer Date June 3, 2003
Owner or Owner's Designee, Title

CERTIFICATE OF INSERVICE INSPECTION

I, the undersigned, holding a valid commission issued by the National Board of Boiler and Pressure Vessel Inspectors and the State or Province of Pennsylvania and employed by HSBCT of Hartford, CT have inspected the components described in this Owner's Report during the period 11 SEP 02 to 13 JUNE 03, and state that to the best of my knowledge and belief, the Owner has performed examinations and taken corrective measures described in this Owner's Report in accordance with the requirements of the ASME code, Section XI.

By signing this certificate neither the Inspector nor his employer makes any warranty, expressed or implied, concerning the examinations and corrective measures described in this Owner's Report. Furthermore, neither the Inspector nor his employer shall be liable in any manner for any personal injury or property damage or a loss of any kind arising from or connected with this inspection.

Inspector's Signature Commissions PA-2497 I,N & A
National Board, State, Province, and Endorsements

Date 13 JUNE 2003

(12/82)

FORM NIS-2 OWNER'S REPORT FOR REPAIRS OR REPLACEMENTS
As Required by the Provisions of the ASME Code Section XI

1. Owner Exelon Genaration Co. LLC (Name) — Date June 3, 2003

200 Exelon Way, Kennett Square, PA 19348 (Address) — Sheet 1 of 2

2. Plant Limerick Generating Station (Name) — Unit 2

P.O. Box 2300, Sanatoga, PA 19464-2300 (Address) — Work Order No. R0864209 (Repair Organization P.O. No., Job No. etc.)

3. Work Performed by Exelon Nuclear (Name) — Type Code Symbol Stamp N/A
Authorization No. N/A

P.O. Box 2300, Sanatoga, PA 19464-2300 (Address) — Expiration Date N/A

4. Identification of System Nuclear Boiler (System 041) — Line No. APE-2MS PSV-041-2F013N

5. (a) Applicable Construction Code ASME III 1968 Edition, Summer 1970 Addenda, N/A Code Case
(b) Applicable Edition of Section XI Utilized for Repairs or Replacements 1989

6. Identification of Components Repaired or Replaced and Replacement Components

Name of Component	Name of Manufacturer	Manufacturer Serial No.	National Board No.	Other Identification	Year Built	Repaired, Replaced, or Replacement	ASME Code Stamped (Yes or No)
MSRV PILOT ASSEMBLY	TARGET ROCK	024	N/A	* 114-03966 PO# 180253	N/A	REPLACEMENT	YES
MSRV BODY	TARGET ROCK	147	N/A	* 114-03966 PO# 180253	N/A	REPLACEMENT	YES
MAIN DISC	TARGET ROCK	4719	N/A	* 114-76023 PO# 180253	2003	REPLACEMENT	YES

* Traceability per Exelon Part Code Number.

7. Description of Work: Replaced main steam relief valve main body with reworked body No.147 and pilot No.024

8. Tests conducted: Hydrostatic Pneumatic Nominal Operating Pressure ☒
Other __ Pressure 1045 psi Test Temp. 168 °F.

NOTE: Supplemental sheets in form of lists, sketches, or drawings may be used, provided (1) size 8 1/2 in. x 11 in., (2) information in items 1 through 6 on this report is included on each sheet, and (3) each sheet is numbered and the number of sheets is recorded at the top of this form.

(12/82) This Form (E00030) may be obtained from the Order Dept., ASME, 345 E.47th St., New York, N.Y. 10017

FORM NIS-2 (BACK)

9. Remarks Manufacturers Data Reports are traceable by Exelon Work Order package.
Applicable Manufacturer's Data Reports to be attached

CERTIFICATE OF COMPLIANCE

We certify that the statements made in the report are correct and this replacement conforms to the rules of the ASME Code, Section XI.
repair or replacement

Type Code Symbol Stamp NA

Certificate of Authorization No. NA Expiration Date NA

Signed J.H. Kramer, Engineer Date June 3, 2003
Owner or Owner's Designee, Title

CERTIFICATE OF INSERVICE INSPECTION

I, the undersigned, holding a valid commission issued by the National Board of Boiler and Pressure Vessel Inspectors and the State or Province of Pennsylvania and employed by HSBCT of Hartford, CT have inspected the components described in this Owner's Report during the period 11 SEP 02 to 13 JUNE 03, and state that to the best of my knowledge and belief, the Owner has performed examinations and taken corrective measures described in this Owner's Report in accordance with the requirements of the ASME code, Section XI.

By signing this certificate neither the Inspector nor his employer makes any warranty, expressed or implied, concerning the examinations and corrective measures described in this Owner's Report. Furthermore, neither the Inspector nor his employer shall be liable in any manner for any personal injury or property damage or a loss of any kind arising from or connected with this inspection.

Inspector's Signature Commissions PA-2497 I,N & A
National Board, State, Province, and Endorsements

Date 13 JUNE ~~18~~ 2003

(12/82)

FORM NIS-2 OWNER'S REPORT FOR REPAIRS OR REPLACEMENTS
As Required by the Provisions of the ASME Code Section XI

1. Owner Exelon Genaration Co. LLC (Name) — Date June 3, 2003

200 Exelon Way, Kennett Square, PA 19348 (Address) — Sheet 1 of 2

2. Plant Limerick Generating Station (Name) — Unit 2

P.O. Box 2300, Sanatoga, PA 19464-2300 (Address) — Work Order No. R0869130 (Repair Organization P.O. No., Job No. etc.)

3. Work Performed by Exelon Nuclear (Name) — Type Code Symbol Stamp N/A
Authorization No. N/A

P.O. Box 2300, Sanatoga, PA 19464-2300 (Address) — Expiration Date N/A

4. Identification of System Nuclear Boiler (System 041) — Line No. APE-2MS PSV-041-2F013S

5. (a) Applicable Construction Code ASME III 1968 Edition, Summer 1970 Addenda, N/A Code Case
(b) Applicable Edition of Section XI Utilized for Repairs or Replacements 1989

6. Identification of Components Repaired or Replaced and Replacement Components

Name of Component	Name of Manufacturer	Manufacturer Serial No.	National Board No.	Other Identification	Year Built	Repaired, Replaced, or Replacement	ASME Code Stamped (Yes or No)
MSRV PILOT ASSEMBLY	TARGET ROCK	030	N/A	* 114-18879 PO# 180253	N/A	REPLACEMENT	YES
MSRV BODY	TARGET ROCK	169	N/A	* 114-18879 PO# 180253	N/A	REPLACEMENT	YES
(1) 1-1/8" SPLINE BOLT	U.S. BOLT	HEAT No. 13350 Trace No. 1WB	N/A	TARGET ROCK PART No. 204842-2	N/A	REPLACEMENT	NO
(1) 1-1/8" SPLINE NUT	ENERGY STEEL	HEAT No. 2-3471LC LOT No. CEY5	N/A	TARGET ROCK PART No. 204843-1	N/A	REPLACEMENT	NO

* Traceability per Exelon Part Code Number.

7. Description of Work: Replaced main steam relief valve main body with reworked body No.169 and pilot No.030

8. Tests conducted: Hydrostatic Pneumatic Nominal Operating Pressure X
Other __ Pressure 1045 psi Test Temp. 168 °F.

NOTE: Supplemental sheets in form of lists, sketches, or drawings may be used, provided (1) size 8 1/2 in. x 11 in., (2) information in items 1 through 6 on this report is included on each sheet, and (3) each sheet is numbered and the number of sheets is recorded at the top of this form.

(12/82) This Form (E00030) may be obtained from the Order Dept., ASME, 345 E.47th St., New York, N.Y. 10017

FORM NIS-2 (BACK)

9. Remarks None
Applicable Manufacturer's Data Reports to be attached

CERTIFICATE OF COMPLIANCE

We certify that the statements made in the report are correct and this replacement conforms to the rules of the ASME Code, Section XI.
repair or replacement

Type Code Symbol Stamp NA

Certificate of Authorization No. NA Expiration Date NA

Signed J.H. Kr J.H. Kramer, Engineer Date June 3, 2003
Owner or Owner's Designee, Title

CERTIFICATE OF INSERVICE INSPECTION

I, the undersigned, holding a valid commission issued by the National Board of Boiler and Pressure Vessel Inspectors and the State or Province of Pennsylvania and employed by HSBCT of Hartford, CT have inspected the components described in this Owner's Report during the period 11 SEP 02 to 13 JUNE 03, and state that to the best of my knowledge and belief, the Owner has performed examinations and taken corrective measures described in this Owner's Report in accordance with the requirements of the ASME code, Section XI.

By signing this certificate neither the Inspector nor his employer makes any warranty, expressed or implied, concerning the examinations and corrective measures described in this Owner's Report. Furthermore, neither the Inspector nor his employer shall be liable in any manner for any personal injury or property damage or a loss of any kind arising from or connected with this inspection.

Inspector's Signature Commissions PA-2497 I,N & A
National Board, State, Province, and Endorsements

Date 13 JUNE 18 2003

(12/82)

FORM NIS-2 OWNER'S REPORT FOR REPAIRS OR REPLACEMENTS
As Required by the Provisions of the ASME Code Section XI

1. Owner Exelon Energy Company (Name) — Date JULY 20, 2001

200 Exelon Way, Kennett Square, PA 19348 (Address) — Sheet 1 of 2

2. Plant Limerick Generating Station (Name) — Unit 2

P.O. Box 2300, Sanatoga, PA 19464-2300 (Address) — Work Order No. C0193967 (Repair Organization P.O. No., Job No. etc.)

3. Work Performed by Exelon Energy Company (Name) — Type Code Symbol Stamp N/A
Authorization No. N/A

P.O. Box 2300, Sanatoga, PA 19464-2300 (Address) — Expiration Date N/A

4. Identification of System Fuel Pool Cooling Water (System 043) — Line No. GBB-210-1

5. (a) Applicable Construction Code ASME III 1974 Edition, Winter 1974 Addenda, N-416-1 Code Case
(b) Applicable Edition of Section XI Utilized for Repairs or Replacements 19 89

6. Identification of Components Repaired or Replaced and Replacement Components

Name of Component	Name of Manufacturer	Manufacturer Serial No.	National Board No.	Other Identification	Year Built	Repaired, Replaced, or Replacement	ASME Code Stamped (Yes or No)
¾" HALF COUPLING	RADNOR ALLOYS	HEAT # 157VNR	N/A	114-92679 PO# 696958	N/A	REPLACEMENT	NO

* Traceability per Exelon stock code number.

7. Description of work: ADDED VENT TO 2A RHR LINE (GBB-210)

8. Tests conducted: Hydrostatic ☐ Pneumatic ☐ Nominal Operating Pressure ☑
Other ☐ Pressure 225 psi Test Temp. 82 °F.

NOTE: Supplemental sheets in form of lists, sketches, or drawings may be used, provided (1) size 8 1/2 in. x 11 in., (2) information in items 1 through 6 on this report is included on each sheet, and (3) each sheet is numbered and the number of sheets is recorded at the top of this form.

(12/82) This Form (E00030) may be obtained from the Order Dept., ASME, 345 E.47th St., New York, N.Y. 10017

FORM NIS-2 (BACK)

9. Remarks Manufactures Data Reports are Traceable by EXELON Work Order Package
Applicable Manufacturer's Data Reports to be attached

CERTIFICATE OF COMPLIANCE

We certify that the statements made in the report are correct and this replacement (repair or replacement) conforms to the rules of the ASME Code, Section XI.

Type Code Symbol Stamp NA

Certificate of Authorization No. NA Expiration Date N/A

Signed Thomas W. Zeigler Date JULY 20, 2001
Owner or Owner's Designee, Title

CERTIFICATE OF INSERVICE INSPECTION

I, the undersigned, holding a valid commission issued by the National Board of Boiler and Pressure Vessel Inspectors and the State or Province of Pennsylvania and employed by H.S.B.I.& I. Company of Hartford, CT have inspected the components described in this Owner's Report during the period 12 SEP 00 to 23 JULY 01, and state that to the best of my knowledge and belief, the Owner has performed examinations and taken corrective measures described in this Owner's Report in accordance with the requirements of the ASME Code, Section XI.

By signing this certificate neither the Inspector nor his employer makes any warranty, expressed or implied, concerning the examinations and corrective measures described in this Owner's Report. Furthermore, neither the Inspector nor his employer shall be liable in any manner for any personal injury or property damage or a loss of any kind arising from or connected with this inspection.

Inspector's Signature Commissions PA-2497 I,N & A
National Board, State, Province, and Endorsements

Date 23 JULY 2001

(12/82)

FORM NIS-2 OWNER'S REPORT FOR REPAIRS OR REPLACEMENTS
As Required by the Provisions of the ASME Code Section XI

1. Owner Exelon Generation Company, LLC (Name) — Date May 6, 2003

200 Exelon Way, Kennett Square, PA 19348 (Address) — Sheet 1 of 2

2. Plant Limerick Generating Station (Name) — Unit 2

P.O. Box 2300, Sanatoga, PA 19464-2300 (Address) — Work Order No. C0204536 (Repair Organization P.O. No., Job No. etc.)

3. Work Performed by Exelon Nuclear (Name) — Type Code Symbol Stamp N/A
Authorization No. N/A

P.O. Box 2300, Sanatoga, PA 19464-2300 (Address) — Expiration Date N/A

4. Identification of System Reactor Water Clean-up (System 044) — Line No. DBB-105 — Valve HV-044-2F039

5. (a) Applicable Construction Code ASME III 1971 Edition, Winter 1972 Addenda, 1516-2, 1567, 1622, 1682 Code Case
(b) Applicable Edition of Section XI Utilized for Repairs or Replacements 1989

6. Identification of Components Repaired or Replaced and Replacement Components

Name of Component	Name of Manufacturer	Manufacturer Serial No.	National Board No.	Other Identification	Year Built	Repaired, Replaced, or Replacement	ASME Code Stamped (Yes or No)
4" Valve HV-044-2F039	Borg-Warner	E-073A-1-2	N/A	* 114-98630 PO# 257805-348190	1998	Replacement	Yes

* Traceability per Exelon stock code number.

7. Description of work: Replaced 4" flanged check valve.
8. Tests conducted: Hydrostatic ☐ Pneumatic ☐ Nominal Operating Pressure ■ ;
Other ☐ 1045 psi Test Temp. N/A °F.

NOTE: Supplemental sheets in form of lists, sketches, or drawings may be used, provided (1) size 8 1/2 in. x 11 in., (2) information in items 1 through 6 on this report is included on each sheet, and (3) each sheet is numbered and the number of sheets is recorded at the top of this form.

(12/82) This Form (E00030) may be obtained from the Order Dept., ASME, 345 E.47th St., New York, N.Y. 10017

FORM NIS-2 (BACK)

9. Remarks Manufacturer's data reports are traceable by Exelon work order package.
Applicable Manufacturer's Data Reports to be attached

CERTIFICATE OF COMPLIANCE

We certify that the statements made in the report are correct and this replacement conforms to the rules of the ASME Code, Section XI.
(repair or replacement)
Type Code Symbol Stamp NA

Certificate of Authorization No. NA Expiration Date NA

Signed J.H. Kramer (engineer) Date May 6, 2003
Owner or Owner's Designee, Title

CERTIFICATE OF INSERVICE INSPECTION

I, the undersigned, holding a valid commission issued by the National Board of Boiler and Pressure Vessel Inspectors and the State or Province of Pennsylvania and employed by HSBCT of Hartford, CT have inspected the components described in this Owner's Report during the period 12 MAR 03 to 9 MAY 03, and state that to the best of my knowledge and belief, the Owner has performed examinations and taken corrective measures described in this Owner's Report in accordance with the requirements of the ASME Code, Section XI.

By signing this certificate neither the Inspector nor his employer makes any warranty, expressed or implied, concerning the examinations and corrective measures described in this Owner's Report. Furthermore, neither the Inspector nor his employer shall be liable in any manner for any personal injury or property damage or a loss of any kind arising from or connected with this inspection.

Inspector's Signature Commissions PA-2497 I,N & A
National Board, State, Province, and Endorsements

Date 9 MAY 19 2003

(12/82)

FORM NIS-2 OWNER'S REPORT FOR REPAIRS OR REPLACEMENTS
As Required by the Provisions of the ASME Code Section XI

1. Owner Exelon Generation Co., ,LLC (Name) — Date MAR. 08, 2003

300 Exelon Way, Kennett Square, PA. 19348 (Address) — Sheet 1 of 2

2. Plant Limerick Generating Station (Name) — Unit 2

P.O. Box 2300, Sanatoga, PA 19464-2300 (Address) — Work Order No. R0867313

Repair Organization P.O. No., Job No. etc.

3. Work Performed by Exelon (Name) — Type Code Symbol Stamp N/A

Authorization No. N/A

P.O. Box 2300. Sanatoga, PA 19464-2300 (Address) — Expiration Date N/A

4. Identification of System 047 CONTROL ROD DRIVE — Line No. 20-S299-06-35

5. (a) Applicable Construction Code ASME III 19 68 Edition, w' 69 Addenda, 1361-1 Code Case
(b) Applicable Edition of Section XI Utilized for Repairs or Replacements 19 89

6. Identification of Components Repaired or Replaced and Replacement Components

Name of Component	Name of Manufacturer	Manufacturer Serial No.	National Board No.	Other Identification	Year Built	Repaired, Replaced, or Replacement	ASME Code Stamped (Yes or No)
CONTROL ROD DRIVE	GENERAL ELECTRIC	5178	N/A	N/A	1973	REPLACEMENT	YES

7. Description of Work REPLACED ONE CONTROL ROD DRIVE

8. Tests conducted: Hydrostatic ____ Pneumatic ____ Nominal Operating Pressure X
Other ¦ Pressure 1045 psi Test Temp. 168 °F.

NOTE: Supplemental sheets in form of lists, sketches, or drawings may be used, provided (1) size 8 1/2 in. x 11 in., (2) information in items 1 through 6 on this report is included on each sheet, and (3) each sheet is numbered and the number of sheets is recorded at the top of this form.

(12/82) This Form (E00030) may be obtained from the Order Dept., ASME, 345 E.47th St., New York, N.Y. 10017

FORM NIS-2 (BACK)

9. Remarks MANUFACTURER DATA REPORT ATTACHED

CERTIFICATE OF COMPLIANCE

We certify that the statements made in the report are correct and this REPLACEMENT (repair or replacement) conforms to the rules of the ASME Code, Section XI.

Type Code Symbol Stamp NA

Certificate of Authorization No. NA Expiration Date NA

Signed [illegible] (DESIGNEE) Date 4-1, 20 03
Owner or Owner's Designee, Title

CERTIFICATE OF INSERVICE INSPECTION

I, the undersigned, holding a valid commission issued by the National Board of Boiler and Pressure Vessel Inspectors and the State or Province of Pennsylvania and employed by H.S.B.I.& I. Company of Hartford, CT have inspected the components described in this Owner's Report during the period 20 FEB 03 to 14 APR 03, and state that to the best of my knowledge and belief, the Owner has performed examinations and taken corrective measures described in this Owner's Report in accordance with the requirements of the ASME Code, Section XI.

By signing this certificate neither the Inspector nor his employer makes any warranty, expressed or implied, concerning the examinations and corrective measures described in this Owner's Report. Furthermore, neither the Inspector nor his employer shall be liable in any manner for any personal injury or property damage or a loss of any kind arising from or connected with this inspection.

[illegible] Commissions PA-2497 I,N & A
Inspector's Signature National Board, State, Province, and Endorsements

Date 14 APR 19 2003

(12/82)

FORM NIS-2 OWNER'S REPORT FOR REPAIRS OR REPLACEMENTS
As Required by the Provisions of the ASME Code Section XI

1. Owner Exelon Generation Co., ,LLC (Name) — Date MAR. 08, 2003

300 Exelon Way, Kennett Square, PA. 19348 (Address) — Sheet 1 of 2

2. Plant Limerick Generating Station (Name) — Unit 2

P.O. Box 2300, Sanatoga, PA 19464-2300 (Address) — Work Order No. R0867313

Repair Organization P.O. No., Job No. etc.

3. Work Performed by Exelon (Name) — Type Code Symbol Stamp N/A

Authorization No. N/A

P.O. Box 2300, Sanatoga, PA 19464-2300 (Address) — Expiration Date N/A

4. Identification of System 047 CONTROL ROD DRIVE — Line No. 20-S299-14-43

5. (a) Applicable Construction Code ASME III 19 68 Edition, w' 69 Addenda, 1361-1 Code Case
(b) Applicable Edition of Section XI Utilized for Repairs or Replacements 19 89

6. Identification of Components Repaired or Replaced and Replacement Components

Name of Component	Name of Manufacturer	Manufacturer Serial No.	National Board No.	Other Identification	Year Built	Repaired, Replaced, or Replacement	ASME Code Stamped (Yes or No)
CONTROL ROD DRIVE	GENERAL ELECTRIC	4933	N/A	N/A	1973	REPLACEMENT	YES

7. Description of Work REPLACED ONE CONTROL ROD DRIVE

8. Tests conducted: Hydrostatic ___ Pneumatic ___ Nominal Operating Pressure X
Other ¦ Pressure 1045 psi Test Temp. 168 °F.

NOTE: Supplemental sheets in form of lists, sketches, or drawings may be used, provided (1) size 8 1/2 in. x 11 in., (2) information in items 1 through 6 on this report is included on each sheet, and (3) each sheet is numbered and the number of sheets is recorded at the top of this form.

(12/82) This Form (E00030) may be obtained from the Order Dept., ASME, 345 E.47th St., New York, N.Y. 10017

FORM NIS-2 (BACK)

9. Remarks MANUFACTURER DATA REPORT ATTACHED

CERTIFICATE OF COMPLIANCE

We certify that the statements made in the report are correct and this REPLACEMENT (repair or replacement) conforms to the rules of the ASME Code, Section XI.

Type Code Symbol Stamp NA

Certificate of Authorization No. NA Expiration Date NA

Signed R. [illegible] (DESIGNEE) Date 4-1, 20 03
Owner or Owner's Designee, Title

CERTIFICATE OF INSERVICE INSPECTION

I, the undersigned, holding a valid commission issued by the National Board of Boiler and Pressure Vessel Inspectors and the State or Province of Pennsylvania and employed by H.S.B.I.& I. Company of Hartford, CT have inspected the components described in this Owner's Report during the period 20 FEB 03 to 14 APR 03, and state that to the best of my knowledge and belief, the Owner has performed examinations and taken corrective measures described in this Owner's Report in accordance with the requirements of the ASME Code, Section XI.

By signing this certificate neither the Inspector nor his employer makes any warranty, expressed or implied, concerning the examinations and corrective measures described in this Owner's Report. Furthermore, neither the Inspector nor his employer shall be liable in any manner for any personal injury or property damage or a loss of any kind arising from or connected with this inspection.

[illegible] Commissions PA-2497 I,N & A
Inspector's Signature National Board, State, Province, and Endorsements

Date 14 APR 2003

(12/82)

FORM NIS-2 OWNER'S REPORT FOR REPAIRS OR REPLACEMENTS
As Required by the Provisions of the ASME Code Section XI

1. Owner Exelon Generation Co., ,LLC (Name) — Date MAR. 08, 2003

300 Exelon Way, Kennett Square, PA. 19348 (Address) — Sheet 1 of 2

2. Plant Limerick Generating Station (Name) — Unit 2

P.O. Box 2300, Sanatoga, PA 19464-2300 (Address) — Work Order No. R0867313

Repair Organization P.O. No., Job No. etc.

3. Work Performed by Exelon (Name) — Type Code Symbol Stamp N/A

Authorization No. N/A

P.O. Box 2300, Sanatoga, PA 19464-2300 (Address) — Expiration Date N/A

4. Identification of System 047 CONTROL ROD DRIVE — Line No. 20-S299-18-35

5. (a) Applicable Construction Code ASME III 19 68 Edition, w' 69 Addenda, 1361-1 Code Case
(b) Applicable Edition of Section XI Utilized for Repairs or Replacements 19 89

6. Identification of Components Repaired or Replaced and Replacement Components

Name of Component	Name of Manufacturer	Manufacturer Serial No.	National Board No.	Other Identification	Year Built	Repaired, Replaced, or Replacement	ASME Code Stamped (Yes or No)
CONTROL ROD DRIVE	GENERAL ELECTRIC	4948	N/A	N/A	1973	REPLACEMENT	YES

7. Description of Work REPLACED ONE CONTROL ROD DRIVE

8. Tests conducted: Hydrostatic ___ Pneumatic ___ Nominal Operating Pressure X
Other | Pressure 1045 psi Test Temp. 168 °F.

NOTE: Supplemental sheets in form of lists, sketches, or drawings may be used, provided (1) size 8 1/2 in. x 11 in., (2) information in items 1 through 6 on this report is included on each sheet, and (3) each sheet is numbered and the number of sheets is recorded at the top of this form.

(12/82) This Form (E00030) may be obtained from the Order Dept., ASME, 345 E.47th St., New York, N.Y. 10017

FORM NIS-2 (BACK)

9. Remarks MANUFACTURER DATA REPORT ATTACHED

CERTIFICATE OF COMPLIANCE

We certify that the statements made in the report are correct and this REPLACEMENT (repair or replacement) conforms to the rules of the ASME Code, Section XI.

Type Code Symbol Stamp NA

Certificate of Authorization No. NA Expiration Date NA

Signed R Sriramy (DESIGNEE) Date 4-1, 20 03
Owner or Owner's Designee/Title

CERTIFICATE OF INSERVICE INSPECTION

I, the undersigned, holding a valid commission issued by the National Board of Boiler and Pressure Vessel Inspectors and the State or Province of Pennsylvania and employed by H.S.B.I.& I. Company of Hartford, CT have inspected the components described in this Owner's Report during the period 20 FEB 03 to 14 APR 03, and state that to the best of my knowledge and belief, the Owner has performed examinations and taken corrective measures described in this Owner's Report in accordance with the requirements of the ASME Code, Section XI.

By signing this certificate neither the Inspector nor his employer makes any warranty, expressed or implied, concerning the examinations and corrective measures described in this Owner's Report. Furthermore, neither the Inspector nor his employer shall be liable in any manner for any personal injury or property damage or a loss of any kind arising from or connected with this inspection.

Inspector's Signature Commissions PA-2497 I,N & A
National Board, State, Province, and Endorsements

Date 14 APR 18 2003

(12/82)

FORM NIS-2 OWNER'S REPORT FOR REPAIRS OR REPLACEMENTS
As Required by the Provisions of the ASME Code Section XI

1. Owner Exelon Generation Co., ,LLC (Name) — Date MAR. 09, 2003

300 Exelon Way, Kennett Square, PA. 19348 (Address) — Sheet 1 of 2

2. Plant Limerick Generating Station (Name) — Unit 2

P.O. Box 2300, Sanatoga, PA 19464-2300 (Address) — Work Order No. R0867313

Repair Organization P.O. No., Job No. etc.

3. Work Performed by Exelon (Name) — Type Code Symbol Stamp N/A

Authorization No. N/A

P.O. Box 2300, Sanatoga, PA 19464-2300 (Address) — Expiration Date N/A

4. Identification of System 047 CONTROL ROD DRIVE — Line No. 20-S299-22-11

5. (a) Applicable Construction Code ASME III 19 68 Edition, w' 69 Addenda, 1361-1 Code Case
(b) Applicable Edition of Section XI Utilized for Repairs or Replacements 19 89

6. Identification of Components Repaired or Replaced and Replacement Components

Name of Component	Name of Manufacturer	Manufacturer Serial No.	National Board No.	Other Identification	Year Built	Repaired, Replaced, or Replacement	ASME Code Stamped (Yes or No)
CONTROL ROD DRIVE	GENERAL ELECTRIC	7366	N/A	N/A	1975	REPLACEMENT	YES

7. Description of Work REPLACED ONE CONTROL ROD DRIVE

8. Tests conducted: Hydrostatic ____ Pneumatic ____ Nominal Operating Pressure X
Other | Pressure 1045 psi Test Temp. 168 °F.

NOTE: Supplemental sheets in form of lists, sketches, or drawings may be used, provided (1) size 8 1/2 in. x 11 in., (2) information in items 1 through 6 on this report is included on each sheet, and (3) each sheet is numbered and the number of sheets is recorded at the top of this form.

(12/82) This Form (E00030) may be obtained from the Order Dept., ASME, 345 E.47th St., New York, N.Y. 10017

FORM NIS-2 (BACK)

9. Remarks MANUFACTURER DATA REPORT ATTACHED

CERTIFICATE OF COMPLIANCE

We certify that the statements made in the report are correct and this REPLACEMENT conforms to the rules of the ASME Code, Section XI.
repair or replacement

Type Code Symbol Stamp NA

Certificate of Authorization No. NA Expiration Date NA

Signed R. Swiany (DESIGNEE) Date 4-1, 20 03
Owner or Owner's Designee, Title

CERTIFICATE OF INSERVICE INSPECTION

I, the undersigned, holding a valid commission issued by the National Board of Boiler and Pressure Vessel Inspectors and the State or Province of Pennsylvania and employed by H.S.B.I.& I. Company of Hartford, CT have inspected the components described in this Owner's Report during the period 20 FEB 03 to 14 APR 03, and state that to the best of my knowledge and belief, the Owner has performed examinations and taken corrective measures described in this Owner's Report in accordance with the requirements of the ASME Code, Section XI.

By signing this certificate neither the Inspector nor his employer makes any warranty, expressed or implied, concerning the examinations and corrective measures described in this Owner's Report. Furthermore, neither the Inspector nor his employer shall be liable in any manner for any personal injury or property damage or a loss of any kind arising from or connected with this inspection.

Inspector's Signature Commissions PA-2497 I,N & A
National Board, State, Province, and Endorsements

Date 14 APR 28 2003

(12/82)

FORM NIS-2 OWNER'S REPORT FOR REPAIRS OR REPLACEMENTS
As Required by the Provisions of the ASME Code Section XI

1. Owner Exelon Generation Co., LLC (Name) — Date MAR. 09, 2003

300 Exelon Way, Kennett Square, PA. 19348 (Address) — Sheet 1 of 2

2. Plant Limerick Generating Station (Name) — Unit 2

P.O. Box 2300, Sanatoga, PA 19464-2300 (Address) — Work Order No. R0867313

3. Work Performed by Exelon (Name) — Repair Organization P.O. No., Job No. etc.
Type Code Symbol Stamp N/A
Authorization No. N/A

P.O. Box 2300, Sanatoga, PA 19464-2300 (Address) — Expiration Date N/A

4. Identification of System 047 CONTROL ROD DRIVE — Line No. 20-S299-22-15

5. (a) Applicable Construction Code ASME III 19 68 Edition, w' 69 Addenda, 1361-1 Code Case
(b) Applicable Edition of Section XI Utilized for Repairs or Replacements 19 89

6. Identification of Components Repaired or Replaced and Replacement Components

Name of Component	Name of Manufacturer	Manufacturer Serial No.	National Board No.	Other Identification	Year Built	Repaired, Replaced, or Replacement	ASME Code Stamped (Yes or No)
CONTROL ROD DRIVE	GENERAL ELECTRIC	5743	N/A	N/A	1974	REPLACEMENT	YES

7. Description of Work REPLACED ONE CONTROL ROD DRIVE

8. Tests conducted: Hydrostatic ____ Pneumatic ____ Nominal Operating Pressure X
Other | Pressure 1045 psi Test Temp. 168 °F.

NOTE: Supplemental sheets in form of lists, sketches, or drawings may be used, provided (1) size 8 1/2 in. x 11 in., (2) information in items 1 through 6 on this report is included on each sheet, and (3) each sheet is numbered and the number of sheets is recorded at the top of this form.

(12/82) This Form (E00030) may be obtained from the Order Dept., ASME, 345 E.47th St., New York, N.Y. 10017

FORM NIS-2 (BACK)

9. Remarks MANUFACTURER DATA REPORT ATTACHED

CERTIFICATE OF COMPLIANCE

We certify that the statements made in the report are correct and this REPLACEMENT conforms to the rules of the ASME Code, Section XI.
repair or replacement

Type Code Symbol Stamp NA

Certificate of Authorization No. NA Expiration Date NA

Signed R. Irizarry (DESIGNEE) Date 4-1, 20 03
Owner or Owner's Designee, Title

CERTIFICATE OF INSERVICE INSPECTION

I, the undersigned, holding a valid commission issued by the National Board of Boiler and Pressure Vessel Inspectors and the State or Province of Pennsylvania and employed by H.S.B.I.& I. Company of Hartford, CT have inspected the components described in this Owner's Report during the period 20 FEB 03 to 14 APR 03, and state that to the best of my knowledge and belief, the Owner has performed examinations and taken corrective measures described in this Owner's Report in accordance with the requirements of the ASME Code, Section XI.

By signing this certificate neither the Inspector nor his employer makes any warranty, expressed or implied, concerning the examinations and corrective measures described in this Owner's Report. Furthermore, neither the Inspector nor his employer shall be liable in any manner for any personal injury or property damage or a loss of any kind arising from or connected with this inspection.

Inspector's Signature Commissions PA-2497 I,N & A
National Board, State, Province, and Endorsements

Date 14 APR ~~18~~ 2003

(12/82)

FORM NIS-2 OWNER'S REPORT FOR REPAIRS OR REPLACEMENTS
As Required by the Provisions of the ASME Code Section XI

1. Owner Exelon Generation Co., ,LLC (Name) — Date MAR. 08, 2003

300 Exelon Way, Kennett Square, PA. 19348 (Address) — Sheet 1 of 2

2. Plant Limerick Generating Station (Name) — Unit 2

P.O. Box 2300, Sanatoga, PA 19464-2300 (Address) — Work Order No. R0867313

Repair Organization P.O. No., Job No. etc.

3. Work Performed by Exelon (Name) — Type Code Symbol Stamp N/A

Authorization No. N/A

P.O. Box 2300, Sanatoga, PA 19464-2300 (Address) — Expiration Date N/A

4. Identification of System 047 CONTROL ROD DRIVE — Line No. 20-S299-22-51

5. (a) Applicable Construction Code ASME III 19 68 Edition, w' 69 Addenda, 1361-1 Code Case
(b) Applicable Edition of Section XI Utilized for Repairs or Replacements 19 89

6. Identification of Components Repaired or Replaced and Replacement Components

Name of Component	Name of Manufacturer	Manufacturer Serial No.	National Board No.	Other Identification	Year Built	Repaired, Replaced, or Replacement	ASME Code Stamped (Yes or No)
CONTROL ROD DRIVE	GENERAL ELECTRIC	4843	N/A	N/A	1973	REPLACEMENT	YES

7. Description of Work REPLACED ONE CONTROL ROD DRIVE

8. Tests conducted: Hydrostatic ____ Pneumatic ____ Nominal Operating Pressure X
Other | Pressure 1045 psi Test Temp. 168 °F.

NOTE: Supplemental sheets in form of lists, sketches, or drawings may be used, provided (1) size 8 1/2 in. x 11 in., (2) information in items 1 through 6 on this report is included on each sheet, and (3) each sheet is numbered and the number of sheets is recorded at the top of this form.

(12/82) This Form (E00030) may be obtained from the Order Dept., ASME, 345 E.47th St., New York, N.Y. 10017

FORM NIS-2 (BACK)

9. Remarks MANUFACTURER DATA REPORT ATTACHED

CERTIFICATE OF COMPLIANCE

We certify that the statements made in the report are correct and this REPLACEMENT conforms to the rules of the ASME Code, Section XI.
repair or replacement

Type Code Symbol Stamp NA

Certificate of Authorization No. NA Expiration Date NA

Signed R. Irizarry (DESIGNEE) Date 4-1, 20 03
Owner or Owner's Designee, Title

CERTIFICATE OF INSERVICE INSPECTION

I, the undersigned, holding a valid commission issued by the National Board of Boiler and Pressure Vessel Inspectors and the State or Province of Pennsylvania and employed by H.S.B.I.& I. Company of Hartford, CT have inspected the components described in this Owner's Report during the period 20 FEB 03 to 14 APR 03, and state that to the best of my knowledge and belief, the Owner has performed examinations and taken corrective measures described in this Owner's Report in accordance with the requirements of the ASME Code, Section XI.

By signing this certificate neither the Inspector nor his employer makes any warranty, expressed or implied, concerning the examinations and corrective measures described in this Owner's Report. Furthermore, neither the Inspector nor his employer shall be liable in any manner for any personal injury or property damage or a loss of any kind arising from or connected with this inspection.

Inspector's Signature Commissions PA-2497 I,N & A
National Board, State, Province, and Endorsements

Date 14 APR 18 2003

(12/82)

FORM NIS-2 OWNER'S REPORT FOR REPAIRS OR REPLACEMENTS
As Required by the Provisions of the ASME Code Section XI

1. Owner Exelon Generation Co., LLC (Name) — Date MAR. 09, 2003

300 Exelon Way, Kennett Square, PA. 19348 (Address) — Sheet 1 of 2

2. Plant Limerick Generating Station (Name) — Unit 2

P.O. Box 2300, Sanatoga, PA 19464-2300 (Address) — Work Order No. R0867313

Repair Organization P.O. No., Job No. etc.

3. Work Performed by Exelon (Name) — Type Code Symbol Stamp N/A

Authorization No. N/A

P.O. Box 2300, Sanatoga, PA 19464-2300 (Address) — Expiration Date N/A

4. Identification of System 047 CONTROL ROD DRIVE — Line No. 20-S299-26-07

5. (a) Applicable Construction Code ASME III 19 68 Edition, w' 69 Addenda, 1361-1 Code Case
(b) Applicable Edition of Section XI Utilized for Repairs or Replacements 19 89

6. Identification of Components Repaired or Replaced and Replacement Components

Name of Component	Name of Manufacturer	Manufacturer Serial No.	National Board No.	Other Identification	Year Built	Repaired, Replaced, or Replacement	ASME Code Stamped (Yes or No)
CONTROL ROD DRIVE	GENERAL ELECTRIC	5179	N/A	N/A	1973	REPLACEMENT	YES

7. Description of Work REPLACED ONE CONTROL ROD DRIVE

8. Tests conducted: Hydrostatic ____ Pneumatic ____ Nominal Operating Pressure X
Other ¦ Pressure 1045 psi Test Temp. 168 °F.

NOTE: Supplemental sheets in form of lists, sketches, or drawings may be used, provided (1) size 8 1/2 in. x 11 in., (2) information in items 1 through 6 on this report is included on each sheet, and (3) each sheet is numbered and the number of sheets is recorded at the top of this form.

(12/82) This Form (E00030) may be obtained from the Order Dept., ASME, 345 E.47th St., New York, N.Y. 10017

FORM NIS-2 (BACK)

9. Remarks MANUFACTURER DATA REPORT ATTACHED

CERTIFICATE OF COMPLIANCE

We certify that the statements made in the report are correct and this REPLACEMENT conforms to the rules of the ASME Code, Section XI.
repair or replacement

Type Code Symbol Stamp NA

Certificate of Authorization No. NA Expiration Date NA

Signed R. Swiany (DESIGNEE) Date 4-1, 20 03
Owner or Owner's Designee, Title

CERTIFICATE OF INSERVICE INSPECTION

I, the undersigned, holding a valid commission issued by the National Board of Boiler and Pressure Vessel Inspectors and the State or Province of Pennsylvania and employed by H.S.B.I.& I. Company of Hartford, CT have inspected the components described in this Owner's Report during the period 20 FEB 03 to 14 APR 03, and state that to the best of my knowledge and belief, the Owner has performed examinations and taken corrective measures described in this Owner's Report in accordance with the requirements of the ASME Code, Section XI.

By signing this certificate neither the Inspector nor his employer makes any warranty, expressed or implied, concerning the examinations and corrective measures described in this Owner's Report. Furthermore, neither the Inspector nor his employer shall be liable in any manner for any personal injury or property damage or a loss of any kind arising from or connected with this inspection.

Inspector's Signature Commissions PA-2497 I,N & A
National Board, State, Province, and Endorsements

Date 14 APR 2003

(12/82)

FORM NIS-2 OWNER'S REPORT FOR REPAIRS OR REPLACEMENTS
As Required by the Provisions of the ASME Code Section XI

1. Owner Exelon Generation Co., LLC (Name) — Date MAR. 09, 2003

300 Exelon Way, Kennett Square, PA. 19348 (Address) — Sheet 1 of 2

2. Plant Limerick Generating Station (Name) — Unit 2

P.O. Box 2300, Sanatoga, PA 19464-2300 (Address) — Work Order No. R0867313

Repair Organization P.O. No., Job No. etc.

3. Work Performed by Exelon (Name) — Type Code Symbol Stamp N/A

Authorization No. N/A

P.O. Box 2300, Sanatoga, PA 19464-2300 (Address) — Expiration Date N/A

4. Identification of System 047 CONTROL ROD DRIVE — Line No. 20-S299-30-59

5. (a) Applicable Construction Code ASME III 19 68 Edition, w' 69 Addenda, 1361-1 Code Case
(b) Applicable Edition of Section XI Utilized for Repairs or Replacements 19 89

6. Identification of Components Repaired or Replaced and Replacement Components

Name of Component	Name of Manufacturer	Manufacturer Serial No.	National Board No.	Other Identification	Year Built	Repaired, Replaced, or Replacement	ASME Code Stamped (Yes or No)
CONTROL ROD DRIVE	GENERAL ELECTRIC	4939	N/A	N/A	1973	REPLACEMENT	YES

7. Description of Work REPLACED ONE CONTROL ROD DRIVE

8. Tests conducted: Hydrostatic ____ Pneumatic ____ Nominal Operating Pressure X
Other | Pressure 1045 psi Test Temp. 168 °F.

NOTE: Supplemental sheets in form of lists, sketches, or drawings may be used, provided (1) size 8 1/2 in. x 11 in., (2) information in items 1 through 6 on this report is included on each sheet, and (3) each sheet is numbered and the number of sheets is recorded at the top of this form.

(12/82) This Form (E00030) may be obtained from the Order Dept., ASME, 345 E.47th St., New York, N.Y. 10017

FORM NIS-2 (BACK)

9. Remarks MANUFACTURER DATA REPORT ATTACHED

CERTIFICATE OF COMPLIANCE

We certify that the statements made in the report are correct and this REPLACEMENT (repair or replacement) conforms to the rules of the ASME Code, Section XI.

Type Code Symbol Stamp NA

Certificate of Authorization No. NA Expiration Date NA

Signed R. J. [illegible] (DESIGNEE) (Owner or Owner's Designee, Title) Date 4-1, 20 03

CERTIFICATE OF INSERVICE INSPECTION

I, the undersigned, holding a valid commission issued by the National Board of Boiler and Pressure Vessel Inspectors and the State or Province of Pennsylvania and employed by H.S.B.I.& I. Company of Hartford, CT have inspected the components described in this Owner's Report during the period 20 FEB 03 to 14 APR 03, and state that to the best of my knowledge and belief, the Owner has performed examinations and taken corrective measures described in this Owner's Report in accordance with the requirements of the ASME Code, Section XI.

By signing this certificate neither the Inspector nor his employer makes any warranty, expressed or implied, concerning the examinations and corrective measures described in this Owner's Report. Furthermore, neither the Inspector nor his employer shall be liable in any manner for any personal injury or property damage or a loss of any kind arising from or connected with this inspection.

[illegible] Commissions PA-2497 I,N & A
Inspector's Signature National Board, State, Province, and Endorsements

Date 14 APR 18 2003

(12/82)

FORM NIS-2 OWNER'S REPORT FOR REPAIRS OR REPLACEMENTS
As Required by the Provisions of the ASME Code Section XI

1. Owner Exelon Generation Co., ,LLC (Name) — Date MAR. 09, 2003

300 Exelon Way, Kennett Square, PA. 19348 (Address) — Sheet 1 of 2

2. Plant Limerick Generating Station (Name) — Unit 2

P.O. Box 2300, Sanatoga, PA 19464-2300 (Address) — Work Order No. R0867313

Repair Organization P.O. No., Job No. etc.

3. Work Performed by Exelon (Name) — Type Code Symbol Stamp N/A

Authorization No. N/A

P.O. Box 2300, Sanatoga, PA 19464-2300 (Address) — Expiration Date N/A

4. Identification of System 047 CONTROL ROD DRIVE — Line No. 20-S299-34-03

5. (a) Applicable Construction Code ASME III 19 68 Edition, w' 69 Addenda, 1361-1 Code Case
(b) Applicable Edition of Section XI Utilized for Repairs or Replacements 19 89

6. Identification of Components Repaired or Replaced and Replacement Components

Name of Component	Name of Manufacturer	Manufacturer Serial No.	National Board No.	Other Identification	Year Built	Repaired, Replaced, or Replacement	ASME Code Stamped (Yes or No)
CONTROL ROD DRIVE	GENERAL ELECTRIC	5986	N/A	N/A	1975	REPLACEMENT	YES

7. Description of Work REPLACED ONE CONTROL ROD DRIVE

8. Tests conducted: Hydrostatic ____ Pneumatic ____ Nominal Operating Pressure X
Other | Pressure 1045 psi Test Temp. 168 °F.

NOTE: Supplemental sheets in form of lists, sketches, or drawings may be used, provided (1) size 8 1/2 in. x 11 in., (2) information in items 1 through 6 on this report is included on each sheet, and (3) each sheet is numbered and the number of sheets is recorded at the top of this form.

(12/82) This Form (E00030) may be obtained from the Order Dept., ASME, 345 E.47th St., New York, N.Y. 10017

FORM NIS-2 (BACK)

9. Remarks MANUFACTURER DATA REPORT ATTACHED

CERTIFICATE OF COMPLIANCE

We certify that the statements made in the report are correct and this REPLACEMENT conforms to the rules of the ASME Code, Section XI.
repair or replacement

Type Code Symbol Stamp NA

Certificate of Authorization No. NA Expiration Date NA

Signed R. Swamy (DESIGNEE) Date 4-1, 20 03
Owner or Owner's Designee, Title

CERTIFICATE OF INSERVICE INSPECTION

I, the undersigned, holding a valid commission issued by the National Board of Boiler and Pressure Vessel Inspectors and the State or Province of Pennsylvania and employed by H.S.B.I.& I. Company of Hartford, CT have inspected the components described in this Owner's Report during the period 20 FEB 03 to 14 APR 03, and state that to the best of my knowledge and belief, the Owner has performed examinations and taken corrective measures described in this Owner's Report in accordance with the requirements of the ASME Code, Section XI.

By signing this certificate neither the Inspector nor his employer makes any warranty, expressed or implied, concerning the examinations and corrective measures described in this Owner's Report. Furthermore, neither the Inspector nor his employer shall be liable in any manner for any personal injury or property damage or a loss of any kind arising from or connected with this inspection.

Inspector's Signature Commissions PA-2497 I,N & A
National Board, State, Province, and Endorsements

Date 14 APR 2003

(12/82)

FORM NIS-2 OWNER'S REPORT FOR REPAIRS OR REPLACEMENTS
As Required by the Provisions of the ASME Code Section XI

1. Owner Exelon Generation Co., ,LLC (Name) — Date MAR. 09, 2003

300 Exelon Way, Kennett Square, PA. 19348 (Address) — Sheet 1 of 2

2. Plant Limerick Generating Station (Name) — Unit 2

P.O. Box 2300, Sanatoga, PA 19464-2300 (Address) — Work Order No. R0867313

Repair Organization P.O. No., Job No. etc.

3. Work Performed by Exelon (Name) — Type Code Symbol Stamp N/A

Authorization No. N/A

P.O. Box 2300, Sanatoga, PA 19464-2300 (Address) — Expiration Date N/A

4. Identification of System 047 CONTROL ROD DRIVE — Line No. 20-S299-34-07

5. (a) Applicable Construction Code ASME III 19 68 Edition, w 69 Addenda, 1361-1 Code Case
(b) Applicable Edition of Section XI Utilized for Repairs or Replacements 19 89

6. Identification of Components Repaired or Replaced and Replacement Components

Name of Component	Name of Manufacturer	Manufacturer Serial No.	National Board No.	Other Identification	Year Built	Repaired, Replaced, or Replacement	ASME Code Stamped (Yes or No)
CONTROL ROD DRIVE	GENERAL ELECTRIC	5971	N/A	N/A	1974	REPLACEMENT	YES

7. Description of Work REPLACED ONE CONTROL ROD DRIVE

8. Tests conducted: Hydrostatic ____ Pneumatic ____ Nominal Operating Pressure X
Other | Pressure 1045 psi Test Temp. 168 °F.

NOTE: Supplemental sheets in form of lists, sketches, or drawings may be used, provided (1) size 8 1/2 in. x 11 in., (2) information in items 1 through 6 on this report is included on each sheet, and (3) each sheet is numbered and the number of sheets is recorded at the top of this form.

(12/82) This Form (E00030) may be obtained from the Order Dept., ASME, 345 E.47th St., New York, N.Y. 10017

FORM NIS-2 (BACK)

9. Remarks MANUFACTURER DATA REPORT ATTACHED

CERTIFICATE OF COMPLIANCE

We certify that the statements made in the report are correct and this REPLACEMENT conforms to the rules of the ASME Code, Section XI.
repair or replacement

Type Code Symbol Stamp NA

Certificate of Authorization No. NA Expiration Date NA

Signed R Lingamy (Designee) Date 4-1, 20 03
Owner or Owner's Designee, Title

CERTIFICATE OF INSERVICE INSPECTION

I, the undersigned, holding a valid commission issued by the National Board of Boiler and Pressure Vessel Inspectors and the State or Province of Pennsylvania and employed by H.S.B.I.& I. Company of Hartford, CT have inspected the components described in this Owner's Report during the period 20 FEB 03 to 14 APR 03, and state that to the best of my knowledge and belief, the Owner has performed examinations and taken corrective measures described in this Owner's Report in accordance with the requirements of the ASME Code, Section XI.

By signing this certificate neither the Inspector nor his employer makes any warranty, expressed or implied, concerning the examinations and corrective measures described in this Owner's Report. Furthermore, neither the Inspector nor his employer shall be liable in any manner for any personal injury or property damage or a loss of any kind arising from or connected with this inspection.

Inspector's Signature Commissions PA-2497 I,N & A
National Board, State, Province, and Endorsements

Date 14 APR 18 2003

(12/82)

FORM NIS-2 OWNER'S REPORT FOR REPAIRS OR REPLACEMENTS
As Required by the Provisions of the ASME Code Section XI

1. Owner Exelon Generation Co., ,LLC (Name) — Date MAR. 09, 2003

300 Exelon Way, Kennett Square, PA. 19348 (Address) — Sheet 1 of 2

2. Plant Limerick Generating Station (Name) — Unit 2

P.O. Box 2300, Sanatoga, PA 19464-2300 (Address) — Work Order No. R0867313

Repair Organization P.O. No., Job No. etc.

3. Work Performed by Exelon (Name) — Type Code Symbol Stamp N/A

Authorization No. N/A

P.O. Box 2300, Sanatoga, PA 19464-2300 (Address) — Expiration Date N/A

4. Identification of System 047 CONTROL ROD DRIVE — Line No. 20-S299-34-11

5. (a) Applicable Construction Code ASME III 19 68 Edition, w' 69 Addenda, 1361-1 Code Case
(b) Applicable Edition of Section XI Utilized for Repairs or Replacements 19 89

6. Identification of Components Repaired or Replaced and Replacement Components

Name of Component	Name of Manufacturer	Manufacturer Serial No.	National Board No.	Other Identification	Year Built	Repaired, Replaced, or Replacement	ASME Code Stamped (Yes or No)
CONTROL ROD DRIVE	GENERAL ELECTRIC	5268	N/A	N/A	1974	REPLACEMENT	YES

7. Description of Work REPLACED ONE CONTROL ROD DRIVE

8. Tests conducted: Hydrostatic ____ Pneumatic ____ Nominal Operating Pressure X

Other | Pressure 1045 psi Test Temp. 168 °F.

NOTE: Supplemental sheets in form of lists, sketches, or drawings may be used, provided (1) size 8 1/2 in. x 11 in., (2) information in items 1 through 6 on this report is included on each sheet, and (3) each sheet is numbered and the number of sheets is recorded at the top of this form.

(12/82) This Form (E00030) may be obtained from the Order Dept., ASME, 345 E.47th St., New York, N.Y. 10017

FORM NIS-2 (BACK)

9. Remarks MANUFACTURER DATA REPORT ATTACHED

CERTIFICATE OF COMPLIANCE

We certify that the statements made in the report are correct and this REPLACEMENT (repair or replacement) conforms to the rules of the ASME Code, Section XI.

Type Code Symbol Stamp NA

Certificate of Authorization No. NA Expiration Date NA

Signed R Grigsby (DESIGNEE) Date 4-1, 20 03
Owner or Owner's Designee, Title

CERTIFICATE OF INSERVICE INSPECTION

I, the undersigned, holding a valid commission issued by the National Board of Boiler and Pressure Vessel Inspectors and the State or Province of Pennsylvania and employed by H.S.B.I.& I. Company of Hartford, CT have inspected the components described in this Owner's Report during the period 20 FEB 03 to 14 APR 03, and state that to the best of my knowledge and belief, the Owner has performed examinations and taken corrective measures described in this Owner's Report in accordance with the requirements of the ASME Code, Section XI.

By signing this certificate neither the Inspector nor his employer makes any warranty, expressed or implied, concerning the examinations and corrective measures described in this Owner's Report. Furthermore, neither the Inspector nor his employer shall be liable in any manner for any personal injury or property damage or a loss of any kind arising from or connected with this inspection.

Inspector's Signature Commissions PA-2497 I,N & A
National Board, State, Province, and Endorsements

Date 14 APR 2003

(12/82)

FORM NIS-2 OWNER'S REPORT FOR REPAIRS OR REPLACEMENTS
As Required by the Provisions of the ASME Code Section XI

1. Owner Exelon Generation Co., LLC (Name) — Date MAR. 09, 2003

300 Exelon Way, Kennett Square, PA. 19348 (Address) — Sheet 1 of 2

2. Plant Limerick Generating Station (Name) — Unit 2

P.O. Box 2300, Sanatoga, PA 19464-2300 (Address) — Work Order No. R0867313

Repair Organization P.O. No., Job No. etc.

3. Work Performed by Exelon (Name) — Type Code Symbol Stamp N/A

Authorization No. N/A

P.O. Box 2300, Sanatoga, PA 19464-2300 (Address) — Expiration Date N/A

4. Identification of System 047 CONTROL ROD DRIVE — Line No. 20-S299-38-23

5. (a) Applicable Construction Code ASME III 19 68 Edition, w' 69 Addenda, 1361-1 Code Case
(b) Applicable Edition of Section XI Utilized for Repairs or Replacements 19 89

6. Identification of Components Repaired or Replaced and Replacement Components

Name of Component	Name of Manufacturer	Manufacturer Serial No.	National Board No.	Other Identification	Year Built	Repaired, Replaced, or Replacement	ASME Code Stamped (Yes or No)
CONTROL ROD DRIVE	GENERAL ELECTRIC	6613	N/A	N/A	1975	REPLACEMENT	YES

7. Description of Work REPLACED ONE CONTROL ROD DRIVE

8. Tests conducted: Hydrostatic ____ Pneumatic ____ Nominal Operating Pressure X
Other | Pressure 1045 psi Test Temp. 168 °F.

NOTE: Supplemental sheets in form of lists, sketches, or drawings may be used, provided (1) size 8 1/2 in. x 11 in., (2) information in items 1 through 6 on this report is included on each sheet, and (3) each sheet is numbered and the number of sheets is recorded at the top of this form.

(12/82) This Form (E00030) may be obtained from the Order Dept., ASME, 345 E.47th St., New York, N.Y. 10017

FORM NIS-2 (BACK)

9. Remarks MANUFACTURER DATA REPORT ATTACHED

CERTIFICATE OF COMPLIANCE

We certify that the statements made in the report are correct and this REPLACEMENT (repair or replacement) conforms to the rules of the ASME Code, Section XI.

Type Code Symbol Stamp NA

Certificate of Authorization No. NA Expiration Date NA

Signed R. Mizzany (DESIGNEE) Date 4-1, 20 03
Owner or Owner's Designee, Title

CERTIFICATE OF INSERVICE INSPECTION

I, the undersigned, holding a valid commission issued by the National Board of Boiler and Pressure Vessel Inspectors and the State or Province of Pennsylvania and employed by H.S.B.I.& I. Company of Hartford, CT have inspected the components described in this Owner's Report during the period 20 FEB 03 to 14 APR 03, and state that to the best of my knowledge and belief, the Owner has performed examinations and taken corrective measures described in this Owner's Report in accordance with the requirements of the ASME Code, Section XI.

By signing this certificate neither the Inspector nor his employer makes any warranty, expressed or implied, concerning the examinations and corrective measures described in this Owner's Report. Furthermore, neither the Inspector nor his employer shall be liable in any manner for any personal injury or property damage or a loss of any kind arising from or connected with this inspection.

Inspector's Signature Commissions PA-2497 I,N & A
National Board, State, Province, and Endorsements

Date 14 APR 2003

(12/82)

2

FORM NIS-2 OWNER'S REPORT FOR REPAIRS OR REPLACEMENTS
As Required by the Provisions of the ASME Code Section XI

1. Owner Exelon Generation Co., LLC (Name) — Date MAR. 09, 2003

300 Exelon Way, Kennett Square, PA. 19348 (Address) — Sheet 1 of 2

2. Plant Limerick Generating Station (Name) — Unit 2

P.O. Box 2300, Sanatoga, PA 19464-2300 (Address) — Work Order No. R0867313

Repair Organization P.O. No., Job No. etc.

3. Work Performed by Exelon (Name) — Type Code Symbol Stamp N/A

Authorization No. N/A

P.O. Box 2300, Sanatoga, PA 19464-2300 (Address) — Expiration Date N/A

4. Identification of System 047 CONTROL ROD DRIVE — Line No. 20-S299-38-59

5. (a) Applicable Construction Code ASME III 19 74 Edition, NONE Addenda, 1361-1 Code Case
(b) Applicable Edition of Section XI Utilized for Repairs or Replacements 19 89

6. Identification of Components Repaired or Replaced and Replacement Components

Name of Component	Name of Manufacturer	Manufacturer Serial No.	National Board No.	Other Identification	Year Built	Repaired, Replaced, or Replacement	ASME Code Stamped (Yes or No)
CONTROL ROD DRIVE	GENERAL ELECTRIC	6506	N/A	N/A	1974	REPLACEMENT	YES

7. Description of Work REPLACED ONE CONTROL ROD DRIVE

8. Tests conducted: Hydrostatic ____ Pneumatic ____ Nominal Operating Pressure X
Other | Pressure 1045 psi Test Temp. 168 °F.

NOTE: Supplemental sheets in form of lists, sketches, or drawings may be used, provided (1) size 8 1/2 in. x 11 in., (2) information in items 1 through 6 on this report is included on each sheet, and (3) each sheet is numbered and the number of sheets is recorded at the top of this form.

(12/82) This Form (E00030) may be obtained from the Order Dept., ASME, 345 E.47th St., New York, N.Y. 10017

FORM NIS-2 (BACK)

9. Remarks MANUFACTURER DATA REPORT ATTACHED

CERTIFICATE OF COMPLIANCE

We certify that the statements made in the report are correct and this REPLACEMENT (repair or replacement) conforms to the rules of the ASME Code, Section XI.

Type Code Symbol Stamp NA

Certificate of Authorization No. NA Expiration Date NA

Signed R. Irizarry (DESIGNEE) Date 4-1, 20 03
Owner or Owner's Designee, Title

CERTIFICATE OF INSERVICE INSPECTION

I, the undersigned, holding a valid commission issued by the National Board of Boiler and Pressure Vessel Inspectors and the State or Province of Pennsylvania and employed by H.S.B.I.& I. Company of Hartford, CT have inspected the components described in this Owner's Report during the period 20 FEB 03 to 14 APR 03, and state that to the best of my knowledge and belief, the Owner has performed examinations and taken corrective measures described in this Owner's Report in accordance with the requirements of the ASME Code, Section XI.

By signing this certificate neither the Inspector nor his employer makes any warranty, expressed or implied, concerning the examinations and corrective measures described in this Owner's Report. Furthermore, neither the Inspector nor his employer shall be liable in any manner for any personal injury or property damage or a loss of any kind arising from or connected with this inspection.

Inspector's Signature Commissions PA-2497 I,N & A
National Board, State, Province, and Endorsements

Date 14 APR 18 2003

(12/82)

FORM NIS-2 OWNER'S REPORT FOR REPAIRS OR REPLACEMENTS
As Required by the Provisions of the ASME Code Section XI

1. Owner Exelon Generation Co., LLC (Name) — Date MAR. 09, 2003

300 Exelon Way, Kennett Square, PA. 19348 (Address) — Sheet 1 of 2

2. Plant Limerick Generating Station (Name) — Unit 2

P.O. Box 2300, Sanatoga, PA 19464-2300 (Address) — Work Order No. R0867313

Repair Organization P.O. No., Job No. etc.

3. Work Performed by Exelon (Name) — Type Code Symbol Stamp N/A

Authorization No. N/A

P.O. Box 2300, Sanatoga, PA 19464-2300 (Address) — Expiration Date N/A

4. Identification of System 047 CONTROL ROD DRIVE — Line No. 20-S299-42-19

5. (a) Applicable Construction Code ASME III 19 68 Edition, W '69 Addenda, 1361-1 Code Case
(b) Applicable Edition of Section XI Utilized for Repairs or Replacements 19 89

6. Identification of Components Repaired or Replaced and Replacement Components

Name of Component	Name of Manufacturer	Manufacturer Serial No.	National Board No.	Other Identification	Year Built	Repaired, Replaced, or Replacement	ASME Code Stamped (Yes or No)
CONTROL ROD DRIVE	GENERAL ELECTRIC	4784	N/A	N/A	1973	REPLACEMENT	YES

7. Description of Work REPLACED ONE CONTROL ROD DRIVE

8. Tests conducted: Hydrostatic ____ Pneumatic ____ Nominal Operating Pressure X
Other | Pressure 1045 psi Test Temp. 168 °F.

NOTE: Supplemental sheets in form of lists, sketches, or drawings may be used, provided (1) size 8 1/2 in. x 11 in., (2) information in items 1 through 6 on this report is included on each sheet, and (3) each sheet is numbered and the number of sheets is recorded at the top of this form.

(12/82) This Form (E00030) may be obtained from the Order Dept., ASME, 345 E.47th St., New York, N.Y. 10017

FORM NIS-2 (BACK)

9. Remarks MANUFACTURER DATA REPORT ATTACHED

CERTIFICATE OF COMPLIANCE

We certify that the statements made in the report are correct and this REPLACEMENT conforms to the rules of the ASME Code, Section XI.
repair or replacement

Type Code Symbol Stamp NA

Certificate of Authorization No. NA Expiration Date NA

Signed R Trigany Date 4 · 1 , 20 03
Owner or Owner's Designee, Title

CERTIFICATE OF INSERVICE INSPECTION

I, the undersigned, holding a valid commission issued by the National Board of Boiler and Pressure Vessel Inspectors and the State or Province of Pennsylvania and employed by H.S.B.I.& I. Company of Hartford, CT have inspected the components described in this Owner's Report during the period 20 FEB 03 to 14 APR 03, and state that to the best of my knowledge and belief, the Owner has performed examinations and taken corrective measures described in this Owner's Report in accordance with the requirements of the ASME Code, Section XI.

By signing this certificate neither the Inspector nor his employer makes any warranty, expressed or implied, concerning the examinations and corrective measures described in this Owner's Report. Furthermore, neither the Inspector nor his employer shall be liable in any manner for any personal injury or property damage or a loss of any kind arising from or connected with this inspection.

Inspector's Signature Commissions PA-2497 I,N & A
National Board, State, Province, and Endorsements

Date 14 APR 2003

(12/82)

FORM NIS-2 OWNER'S REPORT FOR REPAIRS OR REPLACEMENTS
As Required by the Provisions of the ASME Code Section XI

1. Owner Exelon Generation Co., ,LLC (Name) — Date MAR. 09, 2003

300 Exelon Way, Kennett Square, PA. 19348 (Address) — Sheet 1 of 2

2. Plant Limerick Generating Station (Name) — Unit 2

P.O. Box 2300, Sanatoga, PA 19464-2300 (Address) — Work Order No. R0867313

Repair Organization P.O. No., Job No. etc.

3. Work Performed by Exelon (Name) — Type Code Symbol Stamp N/A

Authorization No. N/A

P.O. Box 2300, Sanatoga, PA 19464-2300 (Address) — Expiration Date N/A

4. Identification of System 047 CONTROL ROD DRIVE — Line No. 20-S299-42-51

5. (a) Applicable Construction Code ASME III 19 68 Edition, W '69 Addenda, 1361-1 Code Case
(b) Applicable Edition of Section XI Utilized for Repairs or Replacements 19 89

6. Identification of Components Repaired or Replaced and Replacement Components

Name of Component	Name of Manufacturer	Manufacturer Serial No.	National Board No.	Other Identification	Year Built	Repaired, Replaced, or Replacement	ASME Code Stamped (Yes or No)
CONTROL ROD DRIVE	GENERAL ELECTRIC	6363	N/A	N/A	1974	REPLACEMENT	YES

7. Description of Work REPLACED ONE CONTROL ROD DRIVE

8. Tests conducted: Hydrostatic ____ Pneumatic ____ Nominal Operating Pressure X
Other | Pressure 1045 psi Test Temp. 168 °F.

NOTE: Supplemental sheets in form of lists, sketches, or drawings may be used, provided (1) size 8 1/2 in. x 11 in., (2) information in items 1 through 6 on this report is included on each sheet, and (3) each sheet is numbered and the number of sheets is recorded at the top of this form.

(12/82) This Form (E00030) may be obtained from the Order Dept., ASME, 345 E.47th St., New York, N.Y. 10017

FORM NIS-2 (BACK)

9. Remarks MANUFACTURER DATA REPORT ATTACHED

CERTIFICATE OF COMPLIANCE

We certify that the statements made in the report are correct and this REPLACEMENT (repair or replacement) conforms to the rules of the ASME Code, Section XI.

Type Code Symbol Stamp NA

Certificate of Authorization No. NA Expiration Date NA

Signed R Drizany (DESIGNEE) Date 4-1, 20 03
Owner or Owner's Designee, Title

CERTIFICATE OF INSERVICE INSPECTION

I, the undersigned, holding a valid commission issued by the National Board of Boiler and Pressure Vessel Inspectors and the State or Province of Pennsylvania and employed by H.S.B.I.& I. Company of Hartford, CT have inspected the components described in this Owner's Report during the period 20 FEB 03 to 14 APR 03, and state that to the best of my knowledge and belief, the Owner has performed examinations and taken corrective measures described in this Owner's Report in accordance with the requirements of the ASME Code, Section XI.

By signing this certificate neither the Inspector nor his employer makes any warranty, expressed or implied, concerning the examinations and corrective measures described in this Owner's Report. Furthermore, neither the Inspector nor his employer shall be liable in any manner for any personal injury or property damage or a loss of any kind arising from or connected with this inspection.

Inspector's Signature

Commissions PA-2497 I,N & A
National Board, State, Province, and Endorsements

Date 14 APR ~~18~~ 2005

(12/82)

FORM NIS-2 OWNER'S REPORT FOR REPAIRS OR REPLACEMENTS
As Required by the Provisions of the ASME Code Section XI

1. Owner Exelon Generation Co., LLC (Name) — Date MAR. 09, 2003

300 Exelon Way, Kennett Square, PA. 19348 (Address) — Sheet 1 of 2

2. Plant Limerick Generating Station (Name) — Unit 2

P.O. Box 2300, Sanatoga, PA 19464-2300 (Address) — Work Order No. R0867313

Repair Organization P.O. No., Job No. etc.

3. Work Performed by Exelon (Name) — Type Code Symbol Stamp N/A

Authorization No. N/A

P.O. Box 2300, Sanatoga, PA 19464-2300 (Address) — Expiration Date N/A

4. Identification of System 047 CONTROL ROD DRIVE — Line No. 20-S299-46-27

5. (a) Applicable Construction Code ASME III 19 68 Edition, W '69 Addenda, 1361-1 Code Case
(b) Applicable Edition of Section XI Utilized for Repairs or Replacements 19 89

6. Identification of Components Repaired or Replaced and Replacement Components

Name of Component	Name of Manufacturer	Manufacturer Serial No.	National Board No.	Other Identification	Year Built	Repaired, Replaced, or Replacement	ASME Code Stamped (Yes or No)
CONTROL ROD DRIVE	GENERAL ELECTRIC	6264	N/A	N/A	1974	REPLACEMENT	YES

7. Description of Work REPLACED ONE CONTROL ROD DRIVE

8. Tests conducted: Hydrostatic ____ Pneumatic ____ Nominal Operating Pressure X
Other | Pressure 1045 psi Test Temp. 168 °F.

NOTE: Supplemental sheets in form of lists, sketches, or drawings may be used, provided (1) size 8 1/2 in. x 11 in., (2) information in items 1 through 6 on this report is included on each sheet, and (3) each sheet is numbered and the number of sheets is recorded at the top of this form.

(12/82) This Form (E00030) may be obtained from the Order Dept., ASME, 345 E.47th St., New York, N.Y. 10017

FORM NIS-2 (BACK)

9. Remarks MANUFACTURER DATA REPORT ATTACHED

CERTIFICATE OF COMPLIANCE

We certify that the statements made in the report are correct and this REPLACEMENT conforms to the rules of the ASME Code, Section XI.
repair or replacement

Type Code Symbol Stamp NA

Certificate of Authorization No. NA Expiration Date NA

Signed R Dreyamy (DESIGNEE) Date 4-1, 20 03
Owner or Owner's Designee, Title

CERTIFICATE OF INSERVICE INSPECTION

I, the undersigned, holding a valid commission issued by the National Board of Boiler and Pressure Vessel Inspectors and the State or Province of Pennsylvania and employed by H.S.B.I.& I. Company of Hartford, CT have inspected the components described in this Owner's Report during the period 20 FEB 03 to 14 APR 03, and state that to the best of my knowledge and belief, the Owner has performed examinations and taken corrective measures described in this Owner's Report in accordance with the requirements of the ASME Code, Section XI.

By signing this certificate neither the Inspector nor his employer makes any warranty, expressed or implied, concerning the examinations and corrective measures described in this Owner's Report. Furthermore, neither the Inspector nor his employer shall be liable in any manner for any personal injury or property damage or a loss of any kind arising from or connected with this inspection.

Inspector's Signature Commissions PA-2497 I,N & A
National Board, State, Province, and Endorsements

Date 14 APR 2003

(12/82)

FORM NIS-2 OWNER'S REPORT FOR REPAIRS OR REPLACEMENTS
As Required by the Provisions of the ASME Code Section XI

1. Owner Exelon Generation Co., ,LLC (Name) — Date MAR. 09, 2003

300 Exelon Way, Kennett Square, PA. 19348 (Address) — Sheet 1 of 2

2. Plant Limerick Generating Station (Name) — Unit 2

P.O. Box 2300, Sanatoga, PA 19464-2300 (Address) — Work Order No. R0867313

Repair Organization P.O. No., Job No. etc.

3. Work Performed by Exelon (Name) — Type Code Symbol Stamp N/A

Authorization No. N/A

P.O. Box 2300, Sanatoga, PA 19464-2300 (Address) — Expiration Date N/A

4. Identification of System 047 CONTROL ROD DRIVE — Line No. 20-S299-46-51

5. (a) Applicable Construction Code ASME III 19 68 Edition, W '69 Addenda, 1361-1 Code Case
(b) Applicable Edition of Section XI Utilized for Repairs or Replacements 19 89

6. Identification of Components Repaired or Replaced and Replacement Components

Name of Component	Name of Manufacturer	Manufacturer Serial No.	National Board No.	Other Identification	Year Built	Repaired, Replaced, or Replacement	ASME Code Stamped (Yes or No)
CONTROL ROD DRIVE	GENERAL ELECTRIC	5207	N/A	N/A	1973	REPLACEMENT	YES

7. Description of Work REPLACED ONE CONTROL ROD DRIVE

8. Tests conducted: Hydrostatic ____ Pneumatic ____ Nominal Operating Pressure X
Other | Pressure 1045 psi Test Temp. 168 °F.

NOTE: Supplemental sheets in form of lists, sketches, or drawings may be used, provided (1) size 8 1/2 in. x 11 in., (2) information in items 1 through 6 on this report is included on each sheet, and (3) each sheet is numbered and the number of sheets is recorded at the top of this form.

(12/82) This Form (E00030) may be obtained from the Order Dept., ASME, 345 E.47th St., New York, N.Y. 10017

FORM NIS-2 (BACK)

9. Remarks MANUFACTURER DATA REPORT ATTACHED

CERTIFICATE OF COMPLIANCE

We certify that the statements made in the report are correct and this REPLACEMENT conforms to the rules of the ASME Code, Section XI.
repair or replacement

Type Code Symbol Stamp NA

Certificate of Authorization No. NA Expiration Date NA

Signed [signature] Date 4-1, 20 03
Owner or Owner's Designee, Title

CERTIFICATE OF INSERVICE INSPECTION

I, the undersigned, holding a valid commission issued by the National Board of Boiler and Pressure Vessel Inspectors and the State or Province of Pennsylvania and employed by H.S.B.I.& I. Company of Hartford, CT have inspected the components described in this Owner's Report during the period 20 FEB 03 to 14 APR 03, and state that to the best of my knowledge and belief, the Owner has performed examinations and taken corrective measures described in this Owner's Report in accordance with the requirements of the ASME Code, Section XI.

By signing this certificate neither the Inspector nor his employer makes any warranty, expressed or implied, concerning the examinations and corrective measures described in this Owner's Report. Furthermore, neither the Inspector nor his employer shall be liable in any manner for any personal injury or property damage or a loss of any kind arising from or connected with this inspection.

[signature] Commissions PA-2497 I,N & A
Inspector's Signature National Board, State, Province, and Endorsements

Date 14 APR 18 2003

(12/82)

FORM NIS-2 OWNER'S REPORT FOR REPAIRS OR REPLACEMENTS
As Required by the Provisions of the ASME Code Section XI

1. Owner Exelon Generation Co., LLC (Name) — Date MAR. 09, 2003

300 Exelon Way, Kennett Square, PA. 19348 (Address) — Sheet 1 of 2

2. Plant Limerick Generating Station (Name) — Unit 2

P.O. Box 2300, Sanatoga, PA 19464-2300 (Address) — Work Order No. R0867313

Repair Organization P.O. No., Job No. etc.

3. Work Performed by Exelon (Name) — Type Code Symbol Stamp N/A

Authorization No. N/A

P.O. Box 2300, Sanatoga, PA 19464-2300 (Address) — Expiration Date N/A

4. Identification of System 047 CONTROL ROD DRIVE — Line No. 20-S299-50-47

5. (a) Applicable Construction Code ASME III 19 68 Edition, W '69 Addenda, 1361-1 Code Case
(b) Applicable Edition of Section XI Utilized for Repairs or Replacements 19 89

6. Identification of Components Repaired or Replaced and Replacement Components

Name of Component	Name of Manufacturer	Manufacturer Serial No.	National Board No.	Other Identification	Year Built	Repaired, Replaced, or Replacement	ASME Code Stamped (Yes or No)
CONTROL ROD DRIVE	GENERAL ELECTRIC	4991	N/A	N/A	1973	REPLACEMENT	YES

7. Description of Work REPLACED ONE CONTROL ROD DRIVE

8. Tests conducted: Hydrostatic ____ Pneumatic ____ Nominal Operating Pressure X
Other | Pressure 1045 psi Test Temp. 168 °F.

NOTE: Supplemental sheets in form of lists, sketches, or drawings may be used, provided (1) size 8 1/2 in. x 11 in., (2) information in items 1 through 6 on this report is included on each sheet, and (3) each sheet is numbered and the number of sheets is recorded at the top of this form.

(12/82) This Form (E00030) may be obtained from the Order Dept., ASME, 345 E.47th St., New York, N.Y. 10017

FORM NIS-2 (BACK)

9. Remarks MANUFACTURER DATA REPORT ATTACHED

CERTIFICATE OF COMPLIANCE

We certify that the statements made in the report are correct and this REPLACEMENT conforms to the rules of the ASME Code, Section XI.
repair or replacement

Type Code Symbol Stamp NA

Certificate of Authorization No. NA Expiration Date NA

Signed R. Swizany Date 4-1, 20 03
Owner or Owner's Designee, Title

CERTIFICATE OF INSERVICE INSPECTION

I, the undersigned, holding a valid commission issued by the National Board of Boiler and Pressure Vessel Inspectors and the State or Province of Pennsylvania and employed by H.S.B.I.& I. Company of Hartford, CT have inspected the components described in this Owner's Report during the period 20 FEB 03 to 14 APR 03, and state that to the best of my knowledge and belief, the Owner has performed examinations and taken corrective measures described in this Owner's Report in accordance with the requirements of the ASME Code, Section XI.

By signing this certificate neither the Inspector nor his employer makes any warranty, expressed or implied, concerning the examinations and corrective measures described in this Owner's Report. Furthermore, neither the Inspector nor his employer shall be liable in any manner for any personal injury or property damage or a loss of any kind arising from or connected with this inspection.

Inspector's Signature Commissions PA-2497 I,N & A
National Board, State, Province, and Endorsements

Date 14 APR ~~18~~ 2003

(12/82)

FORM NIS-2 OWNER'S REPORT FOR REPAIRS OR REPLACEMENTS
As Required by the Provisions of the ASME Code Section XI

1. Owner Exelon Generation Co., LLC (Name) — Date MAR. 09, 2003

300 Exelon Way, Kennett Square, PA. 19348 (Address) — Sheet 1 of 2

2. Plant Limerick Generating Station (Name) — Unit 2

P.O. Box 2300, Sanatoga, PA 19464-2300 (Address) — Work Order No. R0867313

3. Work Performed by Exelon (Name) — Repair Organization P.O. No., Job No. etc.
Type Code Symbol Stamp N/A
Authorization No. N/A

P.O. Box 2300, Sanatoga, PA 19464-2300 (Address) — Expiration Date N/A

4. Identification of System 047 CONTROL ROD DRIVE — Line No. 20-S299-58-35

5. (a) Applicable Construction Code ASME III 19 68 Edition, W '69 Addenda, 1361-1 Code Case
(b) Applicable Edition of Section XI Utilized for Repairs or Replacements 19 89

6. Identification of Components Repaired or Replaced and Replacement Components

Name of Component	Name of Manufacturer	Manufacturer Serial No.	National Board No.	Other Identification	Year Built	Repaired, Replaced, or Replacement	ASME Code Stamped (Yes or No)
CONTROL ROD DRIVE	GENERAL ELECTRIC	4973	N/A	N/A	1973	REPLACEMENT	YES

7. Description of Work REPLACED ONE CONTROL ROD DRIVE

8. Tests conducted: Hydrostatic ____ Pneumatic ____ Nominal Operating Pressure X
Other | Pressure 1045 psi Test Temp. 168 °F.

NOTE: Supplemental sheets in form of lists, sketches, or drawings may be used, provided (1) size 8 1/2 in. x 11 in., (2) information in items 1 through 6 on this report is included on each sheet, and (3) each sheet is numbered and the number of sheets is recorded at the top of this form.

(12/82) This Form (E00030) may be obtained from the Order Dept., ASME, 345 E.47th St., New York, N.Y. 10017

FORM NIS-2 (BACK)

9. Remarks MANUFACTURER DATA REPORT ATTACHED

CERTIFICATE OF COMPLIANCE

We certify that the statements made in the report are correct and this REPLACEMENT conforms to the rules of the ASME Code, Section XI.
repair or replacement

Type Code Symbol Stamp NA

Certificate of Authorization No. NA Expiration Date NA

Signed R. Drizzey Date 4-1, 20 03
Owner or Owner's Designee, Title

CERTIFICATE OF INSERVICE INSPECTION

I, the undersigned, holding a valid commission issued by the National Board of Boiler and Pressure Vessel Inspectors and the State or Province of Pennsylvania and employed by H.S.B.I.& I. Company of Hartford, CT have inspected the components described in this Owner's Report during the period 20 FEB 03 to 14 APR 03, and state that to the best of my knowledge and belief, the Owner has performed examinations and taken corrective measures described in this Owner's Report in accordance with the requirements of the ASME Code, Section XI.

By signing this certificate neither the Inspector nor his employer makes any warranty, expressed or implied, concerning the examinations and corrective measures described in this Owner's Report. Furthermore, neither the Inspector nor his employer shall be liable in any manner for any personal injury or property damage or a loss of any kind arising from or connected with this inspection.

Inspector's Signature Commissions PA-2497 I,N & A
National Board, State, Province, and Endorsements

Date 14 APR 2003

(12/82)

FORM NIS-2 OWNER'S REPORT FOR REPAIRS OR REPLACEMENTS
As Required by the Provisions of the ASME Code Section XI

1. Owner Exelon Generation Company, LLC (Name) — Date May 6, 2003

Sheet 1 of 2

200 Exelon Way, Kennett Square, PA 19348 (Address)

2. Plant Limerick Generating Station (Name) — Unit 2

P.O. Box 2300, Sanatoga, PA 19464-2300 (Address) — Work order # R0891800 (Repair Organization P.O. No., Job No. etc.)

3. Work Performed by Exelon Nuclear (Name) — Type Code Symbol Stamp N/A
Authorization No. N/A

P.O. Box 2300, Sanatoga, PA 19464-2300 (Address) — Expiration Date N/A

4. Identification of System Stand By Liquid Control (System-048) — Line No. ECB-214 Valve XV-048-2F004C

5. (a) Applicable Construction Code ASME III 1977 Edition, Summer 1977 Addenda, N/A Code Case
(b) Applicable Edition of Section XI Utilized for Repairs or Replacements 1989

6. Identification of Components Repaired or Replaced and Replacement Components

Name of Component	Name of Manufacturer	Manufacturer Serial No.	National Board No.	Other Identification	Year Built	Repaired, Replaced, or Replacement	ASME Code Stamped
INLET FITTING	IST CONAX	6150	N/A	* 114-77023 PO# 184737	2001	REPLACEMENT	NO
TRIGGER BODY	IST CONAX	6152	N/A	* 114-77023 PO# 184737	2001	REPLACEMENT	NO

* Traceability per Exelon part code number.

7. Description of Work Replaced explosive valve inlet fitting and trigger body

8. Tests conducted: Hydrostatic ☐ Pneumatic ☐ Nominal Operating Pressure ☒
Other ___ Pressure 1220 psi Test Temp. N/A °F.

NOTE: Supplemental sheets in form of lists, sketches, or drawings may be used, provided (1) size 8 1/2 in. x 11 in., (2) information in items 1 through 6 on this report is included on each sheet, and (3) each sheet is numbered and the number of sheets is recorded at the top of this form.

(12/82) This Form (E00030) may be obtained from the Order Dept., ASME, 345 E.47th St., New York, N.Y. 10017

FORM NIS-2 (BACK)

9. Remarks: Manufacturer's data reports are traceable by Exelon work order package.
Applicable Manufacturer's Data Reports to be attached

CERTIFICATE OF COMPLIANCE

We certify that the statements made in the report are correct and this replacement conforms to the rules of the ASME Code, Section XI
Type Code Symbol Stamp NA

Certificate of Authorization No. NA Expiration Date NA

Signed J.H. Kramer, engineer Date May 6, 2003
Owner or Owner's Designee, Title

CERTIFICATE OF INSERVICE INSPECTION

I, the undersigned, holding a valid commission issued by the National Board of Boiler and Pressure Vessel Inspectors and the State or Province of Pennsylvania and employed by HSBCT of Hartford, CT have inspected the components described in this Owner's Report during the period 11 FEB 03 to 9 MAY 03, and state that to the best of my knowledge and belief, the Owner has performed examinations and taken corrective measures described in this Owner's Report in accordance with the requirements of the ASME Code, Section XI.

By signing this certificate neither the Inspector nor his employer makes any warranty, expressed or implied, concerning the examinations and corrective measures described in this Owner's Report. Furthermore, neither the Inspector nor his employer shall be liable in any manner for any personal injury or property damage or a loss of any kind arising from or connected with this inspection.

Inspector's Signature Commissions PA-2497 I,N & A
National Board, State, Province, and Endorsements

Date 9 MAY 2003

(12/82)

FORM NIS-2 OWNER'S REPORT FOR REPAIRS OR REPLACEMENTS
As Required by the Provisions of the ASME Code Section XI

1. Owner Exelon Generation Company, LLC (Name) — Date May 13, 2003

200 Exelon Way, Kennett Square, PA 19348 (Address) — Sheet 1 of 2

2. Plant Limerick Generating Station (Name) — Unit 2

P.O. Box 2300, Sanatoga, PA 19464-2300 (Address) — Work Order No. C0194970 (Repair Organization P.O. No., Job No. etc.)

3. Work Performed by Exelon Nuclear (Name) — Type Code Symbol Stamp N/A
Authorization No. N/A

P.O. Box 2300, Sanatoga, PA 19464-2300 (Address) — Expiration Date N/A

4. Identification of System Residual heat removal (System 051) — Line No. GBB-217 & GBC-204 2B-E205

5. (a) Applicable Construction Code ASME III 1968 Edition, N/A Addenda, N/A Code Case
(b) Applicable Edition of Section XI Utilized for Repairs or Replacements 1989

6. Identification of Components Repaired or Replaced and Replacement Components

Name of Component	Name of Manufacturer	Manufacturer Serial No.	National Board No.	Other Identification	Year Built	Repaired, Replaced, or Replacement	ASME Code Stamped (Yes or No)
(2) Heat Exchanger tube plugs	Exelon	Carpenter Heat# 721938	N/A	* 114-36635 PO# 180864-348902	N/A	Replacement	No
(64) 1-1/8" water box studs	Nova Machine	Heat codes C156, E868 & TMJ	N/A	* 116-12072 PO# 180864	N/A	Replacement	No

* Traceability per Exelon stock code number.

7. Description of work: Plugged and seal welded one RHR heat exchanger U-tube. Replaced heat exchanger water box flange studs.
8. Tests conducted: Hydrostatic ☐ Pneumatic ☐ Nominal Operating Pressure ■ ;
Other ☐ 81 psi Test Temp. N/A °F.

NOTE: Supplemental sheets in form of lists, sketches, or drawings may be used, provided (1) size 8 1/2 in. x 11 in., (2) information in items 1 through 6 on this report is included on each sheet, and (3) each sheet is numbered and the number of sheets is recorded at the top of this form.

(12/82) *This Form (E00030) may be obtained from the Order Dept., ASME, 345 E.47th St., New York, N.Y. 10017*

FORM NIS-2 (BACK)

9. Remarks Tube plugs installed in accordance with Exelon ECR LG-03-00156
Applicable Manufacturer's Data Reports to be attached

CERTIFICATE OF COMPLIANCE

We certify that the statements made in the report are correct and this replacement (repair or replacement) conforms to the rules of the ASME Code, Section XI.
Type Code Symbol Stamp NA

Certificate of Authorization No. NA Expiration Date NA

Signed J.H. Kramer (engineer) Date May 13, 2003
Owner or Owner's Designee, Title

CERTIFICATE OF INSERVICE INSPECTION

I, the undersigned, holding a valid commission issued by the National Board of Boiler and Pressure Vessel Inspectors and the State or Province of Pennsylvania and employed by HSBCT of Hartford, CT have inspected the components described in this Owner's Report during the period 13 MAR 03 to 12 JUNE 03, and state that to the best of my knowledge and belief, the Owner has performed examinations and taken corrective measures described in this Owner's Report in accordance with the requirements of the ASME Code, Section XI.

By signing this certificate neither the Inspector nor his employer makes any warranty, expressed or implied, concerning the examinations and corrective measures described in this Owner's Report. Furthermore, neither the Inspector nor his employer shall be liable in any manner for any personal injury or property damage or a loss of any kind arising from or connected with this inspection.

Inspector's Signature Commissions PA-2497 I,N & A
National Board, State, Province, and Endorsements

Date 12 JUNE 2003

(12/82)

FORM NIS-2 OWNER'S REPORT FOR REPAIRS OR REPLACEMENTS
As Required by the Provisions of the ASME Code Section XI

1. Owner Exelon Generation Company, LLC (Name) — Date May 1, 2003

200 Exelon Way, Kennett Square, PA 19348 (Address) — Sheet 1 of 2

2. Plant Limerick Generating Station (Name) — Unit 2

P.O. Box 2300, Sanatoga, PA 19464-2300 (Address) — Work Order No. C0203362 (Repair Organization P.O. No., Job No. etc.)

3. Work Performed by Exelon Nuclear (Name) — Type Code Symbol Stamp N/A
Authorization No. N/A

P.O. Box 2300, Sanatoga, PA 19464-2300 (Address) — Expiration Date N/A

4. Identification of System Residual heat removal (System 051) — Line No. DCA-204 — Valve HV-051-2F050B

5. (a) Applicable Construction Code ASME III 1974 Edition, Summer 1974 Addenda, N/A Code Case
(b) Applicable Edition of Section XI Utilized for Repairs or Replacements 1989

6. Identification of Components Repaired or Replaced and Replacement Components

Name of Component	Name of Manufacturer	Manufacturer Serial No.	National Board No.	Other Identification	Year Built	Repaired, Replaced, or Replacement	ASME Code Stamped (Yes or No)
12" Valve HV-051-2F050B Disc	Atwood & Morrill	Heat# 91499 S/N 1	N/A	* 114-02791 PO# 189068 & 257796-348062	1999	REPLACEMENT	YES

* Traceability per Exelon stock code number.

7. Description of work: Valve disc replaced.
8. Tests conducted: Hydrostatic ☐ Pneumatic ☐ Nominal Operating Pressure ☒ ;
Other ☐ 1045 psi Test Temp. 168 °F.

NOTE: Supplemental sheets in form of lists, sketches, or drawings may be used, provided (1) size 8 1/2 in. x 11 in., (2) information in items 1 through 6 on this report is included on each sheet, and (3) each sheet is numbered and the number of sheets is recorded at the top of this form.

(12/82) This Form (E00030) may be obtained from the Order Dept., ASME, 345 E.47th St., New York, N.Y. 10017

FORM NIS-2 (BACK)

9. Remarks Manufacturer's data reports are traceable by Exelon work order package.
Applicable Manufacturer's Data Reports to be attached

CERTIFICATE OF COMPLIANCE

We certify that the statements made in the report are correct and this replacement (repair or replacement) conforms to the rules of the ASME Code, Section XI.
Type Code Symbol Stamp NA

Certificate of Authorization No. NA Expiration Date NA

Signed J.H. Kramer J.H. Kramer (engineer) Date May 5, 2003
Owner or Owner's Designee, Title

CERTIFICATE OF INSERVICE INSPECTION

I, the undersigned, holding a valid commission issued by the National Board of Boiler and Pressure Vessel Inspectors and the State or Province of Pennsylvania and employed by HSBCT of Hartford, CT have inspected the components described in this Owner's Report during the period 2 JAN 03 to 9 MAY 03, and state that to the best of my knowledge and belief, the Owner has performed examinations and taken corrective measures described in this Owner's Report in accordance with the requirements of the ASME Code, Section XI.

By signing this certificate neither the Inspector nor his employer makes any warranty, expressed or implied, concerning the examinations and corrective measures described in this Owner's Report. Furthermore, neither the Inspector nor his employer shall be liable in any manner for any personal injury or property damage or a loss of any kind arising from or connected with this inspection.

Inspector's Signature Commissions PA-2497 I,N & A
National Board, State, Province, and Endorsements

Date 9 MAY 2003

(12/82)

FORM NIS-2 OWNER'S REPORT FOR REPAIRS OR REPLACEMENTS
As Required by the Provisions of the ASME Code Section XI

1. Owner Exelon Generation Company, LLC (Name) — Date May 1, 2003

200 Exelon Way, Kennett Square, PA 19348 (Address) — Sheet 1 of 2

2. Plant Limerick Generating Station (Name) — Unit 2

P.O. Box 2300, Sanatoga, PA 19464-2300 (Address) — Work Order No. C0204446 (Repair Organization P.O. No., Job No. etc.)

3. Work Performed by Exelon Nuclear (Name) — Type Code Symbol Stamp N/A
Authorization No. N/A

P.O. Box 2300, Sanatoga, PA 19464-2300 (Address) — Expiration Date N/A

4. Identification of System Residual heat removal (System 051) — Line No. DCA-204 — Valve HV-051-2F050A

5. (a) Applicable Construction Code ASME III 1974 Edition, Summer 1974 Addenda, N/A Code Case
(b) Applicable Edition of Section XI Utilized for Repairs or Replacements 19 89

6. Identification of Components Repaired or Replaced and Replacement Components

Name of Component	Name of Manufacturer	Manufacturer Serial No.	National Board No.	Other Identification	Year Built	Repaired, Replaced, or Replacement	ASME Code Stamped (Yes or No)
12" Valve HV-051-2F050A	Atwood & Morrill	1-50301-A	N/A	N/A	2001	REPAIR	NO

7. Description of work: Valve disc post weld repaired
8. Tests conducted: Hydrostatic ☐ Pneumatic ☐ Nominal Operating Pressure ☒ ;
Other ☐ 1045 psi Test Temp. 168 °F.

NOTE: Supplemental sheets in form of lists, sketches, or drawings may be used, provided (1) size 8 1/2 in. x 11 in., (2) information in items 1 through 6 on this report is included on each sheet, and (3) each sheet is numbered and the number of sheets is recorded at the top of this form.

(12/82) This Form (E00030) may be obtained from the Order Dept., ASME, 345 E.47th St., New York, N.Y. 10017

FORM NIS-2 (BACK)

9. Remarks None
Applicable Manufacturer's Data Reports to be attached

CERTIFICATE OF COMPLIANCE

We certify that the statements made in the report are correct and this repair (repair or replacement) conforms to the rules of the ASME Code, Section XI.
Type Code Symbol Stamp NA

Certificate of Authorization No. NA Expiration Date NA

Signed J.H. Kramer (engineer) Date May 1, 2003
Owner or Owner's Designee, Title

CERTIFICATE OF INSERVICE INSPECTION

I, the undersigned, holding a valid commission issued by the National Board of Boiler and Pressure Vessel Inspectors and the State or Province of Pennsylvania and employed by HSBCT of Hartford, CT have inspected the components described in this Owner's Report during the period 9 MAR 03 to 9 MAY 03, and state that to the best of my knowledge and belief, the Owner has performed examinations and taken corrective measures described in this Owner's Report in accordance with the requirements of the ASME Code, Section XI.

By signing this certificate neither the Inspector nor his employer makes any warranty, expressed or implied, concerning the examinations and corrective measures described in this Owner's Report. Furthermore, neither the Inspector nor his employer shall be liable in any manner for any personal injury or property damage or a loss of any kind arising from or connected with this inspection.

Inspector's Signature Commissions PA-2497 I,N & A
National Board, State, Province, and Endorsements

Date 9 MAY 18 2003

(12/82)

FORM NIS-2 OWNER'S REPORT FOR REPAIRS OR REPLACEMENTS
As Required by the Provisions of the ASME Code Section XI

1. Owner Exelon Generation Company, LLC (Name) — Date May 5, 2003

200 Exelon Way, Kennett Square, PA 19348 (Address) — Sheet 1 of 2

2. Plant Limerick Generating Station (Name) — Unit 2

P.O. Box 2300, Sanatoga, PA 19464-2300 (Address) — Work Order No. R0724582 (Repair Organization P.O. No., Job No. etc.)

3. Work Performed by Exelon Nuclear (Name) — Type Code Symbol Stamp N/A

Authorization No. N/A

P.O. Box 2300, Sanatoga, PA 19464-2300 (Address) — Expiration Date N/A

4. Identification of System Residual heat removal (System 051) — Line No. GBB-219 — Valve 051-2F090D

5. (a) Applicable Construction Code ASME III 1971 Edition, Winter 1973 Addenda, N/A Code Case
(b) Applicable Edition of Section XI Utilized for Repairs or Replacements 1989

6. Identification of Components Repaired or Replaced and Replacement Components

Name of Component	Name of Manufacturer	Manufacturer Serial No.	National Board No.	Other Identification	Year Built	Repaired, Replaced, or Replacement	ASME Code Stamped (Yes or No)
4" Valve 051-2F090D Disc	Velan	7365	N/A	* 114-33943 PO# 179323	2001	REPLACEMENT	YES

* Traceability per Exelon stock code number

7. Description of work: Valve disc replaced

8. Tests conducted: Hydrostatic ☐ Pneumatic ☐ Nominal Operating Pressure ■.
Other ☐ 162 psi Test Temp. N/A °F.

NOTE: Supplemental sheets in form of lists, sketches, or drawings may be used, provided (1) size 8 1/2 in. x 11 in., (2) information in items 1 through 6 on this report is included on each sheet, and (3) each sheet is numbered and the number of sheets is recorded at the top of this form.

(12/82) This Form (E00030) may be obtained from the Order Dept., ASME, 345 E.47th St., New York, N.Y. 10017

FORM NIS-2 (BACK)

9. Remarks Manufacturer's data reports are traceable by Exelon work order package.
Applicable Manufacturer's Data Reports to be attached

CERTIFICATE OF COMPLIANCE

We certify that the statements made in the report are correct and this replacement (repair or replacement) conforms to the rules of the ASME Code, Section XI.
Type Code Symbol Stamp NA

Certificate of Authorization No. NA Expiration Date NA

Signed J.H. Kramer (engineer) Date May 5, 2003
Owner or Owner's Designee, Title

CERTIFICATE OF INSERVICE INSPECTION

I, the undersigned, holding a valid commission issued by the National Board of Boiler and Pressure Vessel Inspectors and the State or Province of Pennsylvania and employed by HSBCT of Hartford, CT have inspected the components described in this Owner's Report during the period 18 JUL 02 to 9 MAY 03, and state that to the best of my knowledge and belief, the Owner has performed examinations and taken corrective measures described in this Owner's Report in accordance with the requirements of the ASME Code, Section XI.

By signing this certificate neither the Inspector nor his employer makes any warranty, expressed or implied, concerning the examinations and corrective measures described in this Owner's Report. Furthermore, neither the Inspector nor his employer shall be liable in any manner for any personal injury or property damage or a loss of any kind arising from or connected with this inspection.

Inspector's Signature Commissions PA-2497 I,N & A
National Board, State, Province, and Endorsements

Date 9 MAY 2003

(12/82)

FORM NIS-2 OWNER'S REPORT FOR REPAIRS OR REPLACEMENTS
As Required by the Provisions of the ASME Code Section XI

1. Owner Exelon Generation Company, LLC (Name) — Date May 7, 2003

200 Exelon Way, Kennett Square, PA 19348 (Address) — Sheet 1 of 2

2. Plant Limerick Generating Station (Name) — Unit 2

P.O. Box 2300, Sanatoga, PA 19464-2300 (Address) — Work Order No. R0863913 (Repair Organization P.O. No., Job No. etc.)

3. Work Performed by Exelon Nuclear (Name) — Type Code Symbol Stamp N/A
Authorization No. N/A

P.O. Box 2300, Sanatoga, PA 19464-2300 (Address) — Expiration Date N/A

4. Identification of System Residual heat removal (System 051) — Line No. GBB-219 — Valve 051-2F090C

5. (a) Applicable Construction Code ASME III 1971 Edition, Winter 1973 Addenda, N/A Code Case
(b) Applicable Edition of Section XI Utilized for Repairs or Replacements 1989

6. Identification of Components Repaired or Replaced and Replacement Components

Name of Component	Name of Manufacturer	Manufacturer Serial No.	National Board No.	Other Identification	Year Built	Repaired, Replaced, or Replacement	ASME Code Stamped (Yes or No)
4" Valve 051-2F090C Disc	Velan	7097	N/A	* 114-33943 PO# 155137	1996	REPLACEMENT	YES

* Traceability per Exelon stock code number.

7. Description of work: Valve disc replaced.
8. Tests conducted: Hydrostatic ☐ Pneumatic ☐ Nominal Operating Pressure ■ ;
Other ☐ 150 psi Test Temp. N/A °F.

NOTE: Supplemental sheets in form of lists, sketches, or drawings may be used, provided (1) size 8 1/2 in. x 11 in., (2) information in items 1 through 6 on this report is included on each sheet, and (3) each sheet is numbered and the number of sheets is recorded at the top of this form.

(12/82) This Form (E00030) may be obtained from the Order Dept., ASME, 345 E.47th St., New York, N.Y. 10017

FORM NIS-2 (BACK)

9. Remarks Manufacturer's data reports are traceable by Exelon work order package.
Applicable Manufacturer's Data Reports to be attached

CERTIFICATE OF COMPLIANCE

We certify that the statements made in the report are correct and this replacement (repair or replacement) conforms to the rules of the ASME Code, Section XI.
Type Code Symbol Stamp NA

Certificate of Authorization No. NA Expiration Date NA

Signed J.H. Kramer (engineer) Date May 7, 2003
Owner or Owner's Designee, Title

CERTIFICATE OF INSERVICE INSPECTION

I, the undersigned, holding a valid commission issued by the National Board of Boiler and Pressure Vessel Inspectors and the State or Province of Pennsylvania and employed by HSBCT of Hartford, CT have inspected the components described in this Owner's Report during the period 8 MAY 01 to 9 MAY 03, and state that to the best of my knowledge and belief, the Owner has performed examinations and taken corrective measures described in this Owner's Report in accordance with the requirements of the ASME Code, Section XI.

By signing this certificate neither the Inspector nor his employer makes any warranty, expressed or implied, concerning the examinations and corrective measures described in this Owner's Report. Furthermore, neither the Inspector nor his employer shall be liable in any manner for any personal injury or property damage or a loss of any kind arising from or connected with this inspection.

Inspector's Signature Commissions PA-2497 I,N & A
National Board, State, Province, and Endorsements

Date 9 MAY 2003

(12/82)

FORM NIS-2 OWNER'S REPORT FOR REPAIRS OR REPLACEMENTS
As Required by the Provisions of the ASME Code Section XI

1. Owner Exelon Generation Company, LLC (Name) — Date May 5, 2003

200 Exelon Way, Kennett Square, PA 19348 (Address) — Sheet 1 of 2

2. Plant Limerick Generating Station (Name) — Unit 2

P.O. Box 2300, Sanatoga, PA 19464-2300 (Address) — Work Order No. R0896042 (Repair Organization P.O. No., Job No. etc.)

3. Work Performed by Exelon Nuclear (Name) — Type Code Symbol Stamp N/A

Authorization No. N/A

P.O. Box 2300, Sanatoga, PA 19464-2300 (Address) — Expiration Date N/A

4. Identification of System Residual heat removal (System 051) — Line No. GBB-219 — Valve 051-2F089D

5. (a) Applicable Construction Code ASME III 19 71 Edition, Winter 1973 Addenda, N/A Code Case
(b) Applicable Edition of Section XI Utilized for Repairs or Replacements 19 89

6. Identification of Components Repaired or Replaced and Replacement Components

Name of Component	Name of Manufacturer	Manufacturer Serial No.	National Board No.	Other Identification	Year Built	Repaired, Replaced, or Replacement	ASME Code Stamped (Yes or No)
4" Valve 051-2F090D Disc	Velan	7447	N/A	* 114-33943 PO# 184729	2001	REPLACEMENT	YES

* Traceability per Exelon stock code number.

7. Description of work: Valve disc replaced.
8. Tests conducted: Hydrostatic ☐ Pneumatic ☐ Nominal Operating Pressure ☒ ;
Other ☐ 162 psi Test Temp. N/A °F.

NOTE: Supplemental sheets in form of lists, sketches, or drawings may be used, provided (1) size 8 1/2 in. x 11 in., (2) information in items 1 through 6 on this report is included on each sheet, and (3) each sheet is numbered and the number of sheets is recorded at the top of this form.

(12/82) This Form (E00030) may be obtained from the Order Dept., ASME, 345 E.47th St., New York, N.Y. 10017

FORM NIS-2 (BACK)

9. Remarks Manufacturer's data reports are traceable by Exelon work order package.
Applicable Manufacturer's Data Reports to be attached

CERTIFICATE OF COMPLIANCE

We certify that the statements made in the report are correct and this replacement (repair or replacement) conforms to the rules of the ASME Code, Section XI.

Type Code Symbol Stamp NA

Certificate of Authorization No. NA Expiration Date NA

Signed J.H. Kramer (engineer) Date May 5, 2003
Owner or Owner's Designee, Title

CERTIFICATE OF INSERVICE INSPECTION

I, the undersigned, holding a valid commission issued by the National Board of Boiler and Pressure Vessel Inspectors and the State or Province of Pennsylvania and employed by HSBCT of Hartford, CT have inspected the components described in this Owner's Report during the period 5 AUG 02 to 9 MAY 03, and state that to the best of my knowledge and belief, the Owner has performed examinations and taken corrective measures described in this Owner's Report in accordance with the requirements of the ASME Code, Section XI.

By signing this certificate neither the Inspector nor his employer makes any warranty, expressed or implied, concerning the examinations and corrective measures described in this Owner's Report. Furthermore, neither the Inspector nor his employer shall be liable in any manner for any personal injury or property damage or a loss of any kind arising from or connected with this inspection.

Inspector's Signature Commissions PA-2497 I,N & A
National Board, State, Province, and Endorsements

Date 9 MAY 2003

(12/82)

FORM NIS-2 OWNER'S REPORT FOR REPAIRS OR REPLACEMENTS
As Required by the Provisions of the ASME Code Section XI

1. Owner Exelon Generation Company, LLC (Name) — Date May 12, 2003

Sheet 1 of 2

200 Exelon Way, Kennett Square, PA 19348 (Address)

2. Plant Limerick Generating Station (Name) — Unit 2

P.O. Box 2300, Sanatoga, PA 19464-2300 (Address) — Work order # C0194544 (Repair Organization P.O. No., Job No. etc.)

3. Work Performed by Exelon Nuclear (Name) — Type Code Symbol Stamp N/A
Authorization No. N/A

P.O. Box 2300, Sanatoga, PA 19464-2300 (Address) — Expiration Date N/A

4. Identification of System Core Spray (System-052) — Line No. HBB-220 PSV-052-2F032A

5. (a) Applicable Construction Code ASME III 1974 Edition, Winter 1974 Addenda, N-416-1 Code Case
(b) Applicable Edition of Section XI Utilized for Repairs or Replacements 1989

6. Identification of Components Repaired or Replaced and Replacement Components

Name of Component	Name of Manufacturer	Manufacturer Serial No.	National Board No.	Other Identification	Year Built	Repaired, Replaced, or Replacement	ASME Code Stamped
PSV-052-2F032A	Kunkle	133975-10-1	N/A	* 114-77945 PO# 655922	1992	Replacement	Yes
2" NPS Pipe	Sanvik Steel	Heat# 462117	N/A	* 114-90026 PO# 628235	N/A	Replacement	No
2" NPS Flange	WFI Nuclear	Heat# 1088ANE1	N/A	* 114-15135 PO# 181464	N/A	Replacement	No

* Traceability per Exelon part code number.

7. Description of Work Replaced Core Spray pump suction relief valve and inlet pipe & flange.

8. Tests conducted: Hydrostatic ☐ Pneumatic ☐ Nominal Operating Pressure ☒
Other ___ Pressure 24 Feet Suppression pool level Test Temp. N/A °F.

NOTE: Supplemental sheets in form of lists, sketches, or drawings may be used, provided (1) size 8 1/2 in. x 11 in., (2) information in items 1 through 6 on this report is included on each sheet, and (3) each sheet is numbered and the number of sheets is recorded at the top of this form.

(12/82) This Form (E00030) may be obtained from the Order Dept., ASME, 345 E.47th St., New York, N.Y. 10017

FORM NIS-2 (BACK)

9. Remarks: Manufacturer's data reports are traceable by Exelon work order package.
Applicable Manufacturer's Data Reports to be attached

Relief valve manufactured in accordance with ASME III, 1974 edition with Summer 1974 addenda.

CERTIFICATE OF COMPLIANCE

We certify that the statements made in the report are correct and this replacement conforms to the rules of the ASME Code, Section XI
Type Code Symbol Stamp NA

Certificate of Authorization No. NA Expiration Date NA

Signed J.H. Kramer, engineer Date May 12, 2003
Owner or Owner's Designee, Title

CERTIFICATE OF INSERVICE INSPECTION

I, the undersigned, holding a valid commission issued by the National Board of Boiler and Pressure Vessel Inspectors and the State or Province of Pennsylvania and employed by HSBCT of Hartford, CT have inspected the components described in this Owner's Report during the period 4 DEC 00 to 12 JUNE 03, and state that to the best of my knowledge and belief, the Owner has performed examinations and taken corrective measures described in this Owner's Report in accordance with the requirements of the ASME Code, Section XI.

By signing this certificate neither the Inspector nor his employer makes any warranty, expressed or implied, concerning the examinations and corrective measures described in this Owner's Report. Furthermore, neither the Inspector nor his employer shall be liable in any manner for any personal injury or property damage or a loss of any kind arising from or connected with this inspection.

Inspector's Signature Commissions PA-2497 I,N & A
National Board, State, Province, and Endorsements

Date 12 JUNE 2003

(12/82)

FORM NIS-2 OWNER'S REPORT FOR REPAIRS OR REPLACEMENTS
As Required by the Provisions of the ASME Code Section XI

1. Owner Exelon Generation Company, LLC (Name) — Date June 16, 2003

200 Exelon Way, Kennett Square, PA 19348 (Address) — Sheet 1 of 2

2. Plant Limerick Generating Station (Name) — Unit 2

P.O. Box 2300, Sanatoga, PA 19464-2300 (Address) — Work order # R0871833 (Repair Organization P.O. No., Job No. etc.)

3. Work Performed by Exelon Nuclear (Name) — Type Code Symbol Stamp N/A
Authorization No. N/A

P.O. Box 2300, Sanatoga, PA 19464-2300 (Address) — Expiration Date N/A

4. Identification of System Core Spray (System-052) — Line No. EBB-231 — Valve 052-2F030B

5. (a) Applicable Construction Code ASME III 1974 Edition, Winter 1974 Addenda, N-416-1 Code Case
(b) Applicable Edition of Section XI Utilized for Repairs or Replacements 1989

6. Identification of Components Repaired or Replaced and Replacement Components

Name of Component	Name of Manufacturer	Manufacturer Serial No.	National Board No.	Other Identification	Year Built	Repaired, Replaced, or Replacement	ASME Code Stamped
Valve 052-2F030B	Edward Vogt	84ASH	N/A	* 114-98110 PO# 257797-348101	2001	Replacement	Yes
2" NPS Pipe	U.S. Steel	Heat# A42035	N/A	* 114-90039 PO# 169202	N/A	Replacement	No

* Traceability per Exelon part code number.

7. Description of Work Replaced 2" check valve and adjacent pipe. Removed and rewelded pipe support.

8. Tests conducted: Hydrostatic ☐ Pneumatic ☐ Nominal Operating Pressure ■
Other ☐ Pressure 262 PSI Test Temp. N/A °F.

NOTE: Supplemental sheets in form of lists, sketches, or drawings may be used, provided (1) size 8 1/2 in. x 11 in., (2) information in items 1 through 6 on this report is included on each sheet, and (3) each sheet is numbered and the number of sheets is recorded at the top of this form.

(12/82) This Form (E00030) may be obtained from the Order Dept., ASME, 345 E.47th St., New York, N.Y. 10017

FORM NIS-2 (BACK)

9. Remarks: Manufacturer's data reports are traceable by Exelon work order package.
Applicable Manufacturer's Data Reports to be attached

Relief valve manufactured in accordance with ASME III, 1974 edition with Summer 1975 addenda.

Per code case N-416-1, NDE completed in accordance with ASME III, 1992 edition. Pressure testing completed in accordance with ASME XI, 1992 edition.

CERTIFICATE OF COMPLIANCE

We certify that the statements made in the report are correct and this replacement conforms to the rules of the ASME Code, Section XI
Type Code Symbol Stamp NA

Certificate of Authorization No. NA Expiration Date NA

Signed J.H. Kramer, engineer Date June 16, 2003
Owner or Owner's Designee, Title

CERTIFICATE OF INSERVICE INSPECTION

I, the undersigned, holding a valid commission issued by the National Board of Boiler and Pressure Vessel Inspectors and the State or Province of Pennsylvania and employed by HSBCT of Hartford, CT have inspected the components described in this Owner's Report during the period 16 OCT 02 to 16 JUNE 03, and state that to the best of my knowledge and belief, the Owner has performed examinations and taken corrective measures described in this Owner's Report in accordance with the requirements of the ASME Code, Section XI.

By signing this certificate neither the Inspector nor his employer makes any warranty, expressed or implied, concerning the examinations and corrective measures described in this Owner's Report. Furthermore, neither the Inspector nor his employer shall be liable in any manner for any personal injury or property damage or a loss of any kind arising from or connected with this inspection.

Inspector's Signature Commissions PA-2497 I,N & A
National Board, State, Province, and Endorsements

Date 16 JUNE 2003.

(12/82)

FORM NIS-2 OWNER'S REPORT FOR REPAIRS OR REPLACEMENTS
As Required by the Provisions of the ASME Code Section XI

1. Owner Exelon Generation Company, LLC (Name) — Date May 30, 2003

200 Exelon Way, Kennett Square, PA 19348 (Address) — Sheet 1 of 2

2. Plant Limerick Generating Station (Name) — Unit 2

P.O. Box 2300, Sanatoga, PA 19464-2300 (Address) — Work Order No. R0872422 (Repair Organization P.O. No., Job No. etc.)

3. Work Performed by Exelon Nuclear (Name) — Type Code Symbol Stamp N/A

Authorization No. N/A

P.O. Box 2300, Sanatoga, PA 19464-2300 (Address) — Expiration Date N/A

4. Identification of System Containment Atmosphere Control (System 057) — Line No. HBD-815 Vacuum Breaker PSV-057-237B-1

5. (a) Applicable Construction Code ASME III 1971 Edition, Summer 1973 Addenda, N/A Code Case

(b) Applicable Edition of Section XI Utilized for Repairs or Replacements 1989

6. Identification of Components Repaired or Replaced and Replacement Components

Name of Component	Name of Manufacturer	Manufacturer Serial No.	National Board No.	Other Identification	Year Built	Repaired, Replaced, or Replacement	ASME Code Stamped (Yes or No)
24" Vacuum Breaker PSV-057-237B-1	Anderson-Greenwood	N/A	N/A	N/A	N/A	Repair	No

7. Description of work: Repaired orifice plate threads by weld repair

8. Tests conducted: Hydrostatic ☐ Pneumatic ☐ Nominal Operating Pressure ☐ ;
Other ☐ N/A psi Test Temp. N/A °F.

NOTE: Supplemental sheets in form of lists, sketches, or drawings may be used, provided (1) size 8 1/2 in. x 11 in., (2) information in items 1 through 6 on this report is included on each sheet, and (3) each sheet is numbered and the number of sheets is recorded at the top of this form.

(12/82) This Form (E00030) may be obtained from the Order Dept., ASME, 345 E.47th St., New York, N.Y. 10017

FORM NIS-2 (BACK)

9. Remarks Post repair testing completed by ST-2-060-400-2, ST-6-060-360-2 and ST-6-060-760-2
Applicable Manufacturer's Data Reports to be attached

CERTIFICATE OF COMPLIANCE

We certify that the statements made in the report are correct and this repair (repair or replacement) conforms to the rules of the ASME Code, Section XI.
Type Code Symbol Stamp NA

Certificate of Authorization No. NA Expiration Date NA

Signed J.H. Kramer (engineer) Date May 31, 2003
Owner or Owner's Designee, Title

CERTIFICATE OF INSERVICE INSPECTION

I, the undersigned, holding a valid commission issued by the National Board of Boiler and Pressure Vessel Inspectors and the State or Province of Pennsylvania and employed by HSBCT of Hartford, CT have inspected the components described in this Owner's Report during the period 10 MAR 03 to 3 JUNE 03, and state that to the best of my knowledge and belief, the Owner has performed examinations and taken corrective measures described in this Owner's Report in accordance with the requirements of the ASME Code, Section XI.

By signing this certificate neither the Inspector nor his employer makes any warranty, expressed or implied, concerning the examinations and corrective measures described in this Owner's Report. Furthermore, neither the Inspector nor his employer shall be liable in any manner for any personal injury or property damage or a loss of any kind arising from or connected with this inspection.

Inspector's Signature Commissions PA-2497 I,N & A
National Board, State, Province, and Endorsements

Date 3 JUNE ~~19~~ 2003

(12/82)

FORM NIS-2 OWNER'S REPORT FOR REPAIRS OR REPLACEMENTS
As Required by the Provisions of the ASME Code Section XI

1. Owner Exelon generation Company, LLC (Name) — Date May 30, 2003

200 Exelon Way, Kennett Square, PA 19348 (Address) — Sheet 1 of 2

2. Plant Limerick Generating Station (Name) — Unit 2

P.O. Box 2300, Sanatoga, PA 19464-2300 (Address) — Action Request No. A1361522 (Repair Organization P.O. No., Job No. etc.)

3. Work Performed by Exelon Nuclear (Name) — Type Code Symbol Stamp N/A
Authorization No. N/A

P.O. Box 2300, Sanatoga, PA 19464-2300 (Address) — Expiration Date N/A

4. Identification of System Snubbers (System 103) — Line No. Various, See Name of Component

5. (a) Applicable Construction Code ANSI B31.7 19 69 Edition, March 10, 1971 Addenda, N/A Code Case
(b) Applicable Edition of Section XI Utilized for Repairs or Replacements 19 89

6. Identification of Components Repaired or Replaced and Replacement Components

Name of Component	Name of Manufacturer	Manufacturer Serial No.	National Board No.	Other Identification	Year Built	Repaired, Replaced, or Replacement	ASME Code Stamped
DCA-201-H060	BASIC-PSA	42196	N/A	PSA-3 SNUBBER	N/A	Replacement	No

7. Description of Work Replaced mechanical shock arrester snubbers

8. Tests conducted: Hydrostatic __ Pneumatic __ Nominal Operating Pressure __
Other ____ Pressure N/A psi Test Temp. N/A °F.

NOTE: Supplemental sheets in form of lists, sketches, or drawings may be used, provided (1) size 8 1/2 in. x 11 in., (2) information in items 1 through 6 on this report is included on each sheet, and (3) each sheet is numbered and the number of sheets is recorded at the top of this form.

(12/82) This Form (E00030) may be obtained from the Order Dept., ASME, 345 E.47th St., New York, N.Y. 10017

FORM NIS-2 (BACK)

9. Remarks Pacific Scientific, BASIC-PSA snubbers are manufactured to ASME III, 1977 edition with winter 1977 addenda.
Applicable Manufacturer's Data Reports to be attached

CERTIFICATE OF COMPLIANCE

We certify that the statements made in the report are correct and this replacement conforms to the rules of the ASME Code, Section XI.
repair of replacement

Type Code Symbol Stamp NA

Certificate of Authorization No. NA Expiration Date NA

Signed J. H. Kramer, Engineer Date May 30, 2003
Owner or Owner's Designee, Title

CERTIFICATE OF INSERVICE INSPECTION

I, the undersigned, holding a valid commission issued by the National Board of Boiler and Pressure Vessel Inspectors and the State or Province of Pennsylvania and employed by HSBCT of Hartford, CT have inspected the components described in this Owner's Report during the period 19 MAR 03 to 3 JUNE 03, and state that to the best of my knowledge and belief, the Owner has performed examinations and taken corrective measures described in this Owner's Report in accordance with the requirements of the ASME Code, Section XI

By signing this certificate neither the Inspector nor his employer makes any warranty, expressed or implied, concerning the examinations and corrective measures described in this Owner's Report. Furthermore, neither the Inspector nor his employer shall be liable in any manner for any personal injury or property damage or a loss of any kind arising from or connected with this inspection.

Inspector's Signature Commissions PA-2497 I,N & A
National Board, State, Province, and Endorsements

Date 3 JUNE 19 2003

(12/82)

FORM NIS-2 OWNER'S REPORT FOR REPAIRS OR REPLACEMENTS
As Required by the Provisions of the ASME Code Section XI

1. Owner Exelon generation Company, LLC (Name) — Date May 30, 2003

200 Exelon Way, Kennett Square, PA 19348 (Address) — Sheet 1 of 2

2. Plant Limerick Generating Station (Name) — Unit 2

P.O. Box 2300, Sanatoga, PA 19464-2300 (Address) — Action Request No. A1361523 (Repair Organization P.O. No., Job No. etc.)

3. Work Performed by Exelon Nuclear (Name) — Type Code Symbol Stamp N/A
Authorization No. N/A

P.O. Box 2300, Sanatoga, PA 19464-2300 (Address) — Expiration Date N/A

4. Identification of System Snubbers (System 103) — Line No. Various, See Name of Component

5. (a) Applicable Construction Code ANSI B31.7 19 69 Edition, March 10, 1971 Addenda, N/A Code Case
(b) Applicable Edition of Section XI Utilized for Repairs or Replacements 19 89

6. Identification of Components Repaired or Replaced and Replacement Components

Name of Component	Name of Manufacturer	Manufacturer Serial No.	National Board No.	Other Identification	Year Built	Repaired, Replaced, or Replacement	ASME Code Stamped
EBB-209-H015	BASIC-PSA	42196	N/A	PSA-3 SNUBBER	N/A	Replacement	No
GBB-217-H015	BASIC-PSA	42203	N/A	PSA-10 SNUBBER	N/A	Replacement	No
GBB-219-H093(B)	BASIC-PSA	42213	N/A	PSA-10 SNUBBER	N/A	Replacement	No
HBB-210-H021(A)	BASIC-PSA	42197	N/A	PSA-3 SNUBBER	N/A	Replacement	No
HBC-293-H012	BASIC-PSA	41413	N/A	PSA-1 SNUBBER	N/A	Replacement	No

7. Description of Work Replaced mechanical shock arrester snubbers

8. Tests conducted: Hydrostatic __ Pneumatic __ Nominal Operating Pressure __
Other ____ Pressure N/A psi Test Temp. N/A °F.

NOTE: Supplemental sheets in form of lists, sketches, or drawings may be used, provided (1) size 8 1/2 in. x 11 in., (2) information in items 1 through 6 on this report is included on each sheet, and (3) each sheet is numbered and the number of sheets is recorded at the top of this form.

(12/82) This Form (E00030) may be obtained from the Order Dept., ASME, 345 E.47th St., New York, N.Y. 10017

FORM NIS-2 (BACK)

9. Remarks Pacific Scientific, BASIC-PSA snubbers are manufactured to ASME III, 1977 edition with winter 1977 addenda.
Applicable Manufacturer's Data Reports to be attached

CERTIFICATE OF COMPLIANCE

We certify that the statements made in the report are correct and this replacement (repair of replacement) conforms to the rules of the ASME Code, Section XI.

Type Code Symbol Stamp NA

Certificate of Authorization No. NA Expiration Date NA

Signed J. H. Kramer, Engineer Date May 30, 2003
Owner or Owner's Designee, Title

CERTIFICATE OF INSERVICE INSPECTION

I, the undersigned, holding a valid commission issued by the National Board of Boiler and Pressure Vessel Inspectors and the State or Province of Pennsylvania and employed by HSBCT of Hartford, CT have inspected the components described in this Owner's Report during the period 19 MAR 03 to 3 JUNE 03, and state that to the best of my knowledge and belief, the Owner has performed examinations and taken corrective measures described in this Owner's Report in accordance with the requirements of the ASME Code, Section XI

By signing this certificate neither the Inspector nor his employer makes any warranty, expressed or implied, concerning the examinations and corrective measures described in this Owner's Report. Furthermore, neither the Inspector nor his employer shall be liable in any manner for any personal injury or property damage or a loss of any kind arising from or connected with this inspection.

Inspector's Signature Commissions PA-2497 I,N & A
National Board, State, Province, and Endorsements

Date 3 JUNE 18 2003

(12/82)

FORM NIS-2 OWNER'S REPORT FOR REPAIRS OR REPLACEMENTS
As Required by the Provisions of the ASME Code Section XI

1. Owner Exelon generation Company, LLC (Name) — Date May 15, 2003

200 Exelon Way, Kennett Square, PA 19348 (Address) — Sheet 1 of 3

2. Plant Limerick Generating Station (Name) — Unit 2

P.O. Box 2300, Sanatoga, PA 19464-2300 (Address) — Action Request No. A1361529 (Repair Organization P.O. No., Job No. etc.)

3. Work Performed by Exelon Nuclear (Name) — Type Code Symbol Stamp N/A

Authorization No. N/A

P.O. Box 2300, Sanatoga, PA 19464-2300 (Address) — Expiration Date N/A

4. Identification of System Snubbers (System 103) — Line No. Various, See Name of Component

5. (a) Applicable Construction Code ANSI B31.7 19 69 Edition, March 10, 1971 Addenda, N/A Code Case
(b) Applicable Edition of Section XI Utilized for Repairs or Replacements 19 89

6. Identification of Components Repaired or Replaced and Replacement Components

Name of Component	Name of Manufacturer	Manufacturer Serial No.	National Board No.	Other Identification	Year Built	Repaired, Replaced, or Replacement	ASME Code Stamped
GBB-213-H013 (A)	BASIC-PSA	42195	N/A	PSA-3 SNUBBER	N/A	Replacement	No
GBB-213-H013 (B)	BASIC-PSA	41840	N/A	PSA-3 SNUBBER	N/A	Replacement	No
GBB-213-H054	BASIC-PSA	42209	N/A	PSA-10 SNUBBER	N/A	Replacement	No
GBB-218-H059 (A)	BASIC-PSA	42216	N/A	PSA-10 SNUBBER	N/A	Replacement	No
GBB-218-H064	BASIC-PSA	42215	N/A	PSA-10 SNUBBER	N/A	Replacement	No
GBB-218-H068	BASIC-PSA	42217	N/A	PSA-10 SNUBBER	N/A	Replacement	No
GBB-218-H069 (B)	BASIC-PSA	41839	N/A	PSA-3 SNUBBER	N/A	Replacement	No
GBB-218-H078 (A)	BASIC-PSA	42216	N/A	PSA-10 SNUBBER	N/A	Replacement	No

7. Description of Work Replaced mechanical shock arrester snubbers

8. Tests conducted: Hydrostatic __ Pneumatic __ Nominal Operating Pressure __
Other ___ Pressure N/A psi Test Temp. N/A °F.

NOTE: Supplemental sheets in form of lists, sketches, or drawings may be used, provided (1) size 8 1/2 in. x 11 in., (2) information in items 1 through 6 on this report is included on each sheet, and (3) each sheet is numbered and the number of sheets is recorded at the top of this form.

(12/82) This Form (E00030) may be obtained from the Order Dept., ASME, 345 E.47th St., New York, N.Y. 10017

FORM NIS-2 OWNER'S REPORT FOR REPAIRS OR REPLACEMENTS
As Required by the Provisions of the ASME Code Section XI

1. Owner Exelon generation Company, LLC (Name) — Date May 15, 2003

200 Exelon Way, Kennett Square, PA 19348 (Address) — Sheet 2 of 3

2. Plant Limerick Generating Station (Name) — Unit 2

P.O. Box 2300, Sanatoga, PA 19464-2300 (Address) — Action Request No. A1361529 (Repair Organization P.O. No., Job No. etc.)

3. Work Performed by Exelon Nuclear (Name) — Type Code Symbol Stamp N/A
Authorization No. N/A

P.O. Box 2300, Sanatoga, PA 19464-2300 (Address) — Expiration Date N/A

4. Identification of System Snubbers (System 103) — Line No. Various, See Name of Component

5. (a) Applicable Construction Code ANSI B31.7 19 69 Edition, March 10, 1971 Addenda, N/A Code Case
(b) Applicable Edition of Section XI Utilized for Repairs or Replacements 19 89

6. Identification of Components Repaired or Replaced and Replacement Components

Name of Component	Name of Manufacturer	Manufacturer Serial No.	National Board No.	Other Identification	Year Built	Repaired, Replaced, or Replacement	ASME Code Stamped
GBB-218-H078 (B)	BASIC-PSA	42210	N/A	PSA-10 SNUBBER	N/A	Replacement	No
GBB-219-H012	BASIC-PSA	42214	N/A	PSA-10 SNUBBER	N/A	Replacement	No
GBB-219-H090 (B)	BASIC-PSA	42219	N/A	PSA-10 SNUBBER	N/A	Replacement	No

FORM NIS-2 (BACK)

9. Remarks Pacific Scientific, BASIC-PSA snubbers are manufactured to ASME III, 1977 edition with winter 1977 addenda.
Applicable Manufacturer's Data Reports to be attached

CERTIFICATE OF COMPLIANCE

We certify that the statements made in the report are correct and this replacement (repair of replacement) conforms to the rules of the ASME Code, Section XI.
Type Code Symbol Stamp NA

Certificate of Authorization No. NA Expiration Date NA

Signed J. H. Kramer, Engineer Date May 15, 2003
Owner or Owner's Designee, Title

CERTIFICATE OF INSERVICE INSPECTION

I, the undersigned, holding a valid commission issued by the National Board of Boiler and Pressure Vessel Inspectors and the State or Province of Pennsylvania and employed by HSBCT of Hartford, CT have inspected the components described in this Owner's Report during the period 19 MAR 02 to 19 MAY 03, and state that to the best of my knowledge and belief, the Owner has performed examinations and taken corrective measures described in this Owner's Report in accordance with the requirements of the ASME Code, Section XI

By signing this certificate neither the Inspector nor his employer makes any warranty, expressed or implied, concerning the examinations and corrective measures described in this Owner's Report. Furthermore, neither the Inspector nor his employer shall be liable in any manner for any personal injury or property damage or a loss of any kind arising from or connected with this inspection.

Inspector's Signature Commissions PA-2497 I,N & A
National Board, State, Province, and Endorsements

Date 19 MAY 2003

(12/82)