Development of a Performance Assessment Capability in the Waste Management Programs of the U.S. Nuclear Regulatory Commission

Norman A. Eisenberg,[†] Michael P. Lee,[†] Timothy J. McCartin,[†] Keith I. McConnell,[†] Mark Thaggard,[†] and Andrew C. Campbell [††]

The U.S. Nuclear Regulatory Commission (NRC) staff has developed a performance assessment capability to address three programmatic areas in nuclear waste management: high-level waste, low-level waste, and decommissioning of licensed facilities (license termination). The NRC capability consists of (1) methodologies for performance assessment, (2) models and computer codes for estimating system performance, (3) regulatory guidance in the form of regulations, Branch Technical Positions, and Standard Review Plans, and (4) a technical staff experienced in executing and evaluating performance assessments for a variety of waste systems. Although the tools and techniques are refined for each programmatic area, general approaches and similar issues are encountered in all areas.

KEY WORDS: Performance assessment, nuclear waste, risk-informed regulation.

1. INTRODUCTION

This paper provides a summary of performance assessment activities at the U. S. Nuclear Regulatory Commission in the program areas of high-level waste (HLW), low-level waste (LLW), and license termination (decommissioning). Performance assessment continues to be a dynamic field within waste management, so changes in NRC's activities, methods, and procedures are anticipated. Consequently this paper provides a snapshot in time of current and previous activities.

The Division of Waste Management, within the U.S. Nuclear Regulatory Commission's (NRC's) Office of Nuclear Material Safety and Safeguards (NMSS), regulates the disposal of commercial radioactive waste produced as a result of NRC-licensed activities.[1] These materials can either be man-made or naturally occurring, but technologically altered. Current NRC policy is to encourage the use of probabilistic risk assessments, to the extent supported by data and state-of-the-art technology and methods,[2] in keeping with the Commission's responsibility to protect public health and safety.[3] Consistent with the Commission's PRA policy, the NRC staff has been engaged in the development of a independent performance assessment capability (performance assessment is a probabilistic safety assessment method applied to waste management), as one means of ensuring that its licensees meet its regulations. The staff is applying performance assessment methods in various waste management programs, namely high-level waste, low-level waste, and decommissioning. Each of the programmatic areas has its own set of regulatory issues, technical challenges, and system characteristics (see Table I); however, the methods of performance assessment have been successfully applied in each programmatic area with adjustments made for individual characteristics.

[†] NRC Division of Waste Management, Office of Nuclear Material Safety and Safeguards, Washington, D.C. 20555.

[††] NRC Advisory Committee on Nuclear Waste, Washington, D.C. 20555.

9901070108 981214
NMSS SUBJ
109.2 CF

Table I. Characteristics of Programmatic Areas for Performance Assessment (PA) Applications. The nature of the regulation and the system analyzed determines the character of the analysis, e.g. the level of detail, the degree to which it is probabilistic or deterministic.

Programmatic Area	*Depth*	*Hazard*	*Regulatory Time Frame (years)*	*Composition of Hazard*	*Engineered Components*	*Environmental Transport*
HLW	Deep (>300 meters)	High	10^4	Principally spent nuclear fuel and vitrified HLW	Waste package canisters and other man-made (engineered) features	Large times and distances increase complexity
LLW	Near Surface	Medium	10,000	Large variety of radionuclides, most short-lived	Substantial (impermeable) caps and other man-made features	Sites selected to simplify analysis of transport
Decommissioning	Surface, Near Surface	Low	1000	Few variety of radionuclides, frequently long-lived	Usually none; sometimes caps or vaults	Often very complex near surface

A significant use of PRA technology applied to nuclear reactor safety was in the mid-1970s through the NRC sponsorship of the *Reactor Safety Study*.[4] Earlier, in 1975, NRC had completed its first study of the probabilities and consequences of severe reactor accidents at two commercial nuclear power reactors.[5] After completion of these PRAs, NRC, industry groups, and the utilities initiated programs, including *independent plant evaluations* and *internal plant evaluations of external events*, to improve PRA technology to measure and enhance nuclear power reactor safety, and NRC gradually introduced PRAs into its regulatory process.[6]

At about the same time, the NRC staff (with the assistance of its contractors – principally the Sandia National Laboratory (SNL)) began to develop the capability to conduct performance assessments in anticipation of its involvement in the management of radioactive waste. Through legislation that was passed in the early 1980s and 1990s, Congress directed the NRC to expand its regulatory programs in the areas of HLW and LLW. The Commission responded to this new authority by promulgating regulations (see Table II), which, in part, were based on information from its respective performance assessment programs. The intent of this paper is to describe these programs, provide a perspective of how they developed in the past, and their potential development in the future, including technical methods and technical policy issues.

1.1 Broad definition of "Performance Assessment"

A (geologic) disposal facility[7] for the containment and isolation of radioactive wastes is a complex system, often comprised of both engineered and natural components. It is generally viewed to consist of multiple barriers,[8] where each barrier will contribute to the overall safety of the system by providing some degree of defense-in depth for containment and waste isolation. Because the future performance of a disposal facility must be estimated for many years into the future, the long-term performance of the overall system, including representations of its significant subsystems, is estimated through the use of predictive mathematical models, usually implemented through computer codes.

There is general consensus within the international community that to evaluate the safety of radioactive waste disposal facilities, developers and regulators will rely on mathematical models, numerical methods, and computer codes as part of *performance assessment*. A performance assessment is a type of systematic safety analysis that addresses: (i) what can happen; (ii) how likely is it to happen; (iii) what are the resulting impacts; and (iv) how these impacts compare to regulatory standards. The Nuclear Energy Agency (OECD/NEA) defines performance assessment as "... an analysis to predict the performance of a system or subsystem, followed by a comparison of the results of such [an] analysis with appropriate [safety] standards and criteria...."[9] Performance assessment may thus be defined as the process of quantitatively evaluating the ability of a disposal facility to contain and isolate radioactive waste.[10] This quantitative evaluation is a key component in the development of a disposal facility design and in the demonstration of compliance with the applicable safety standards.

For the purposes of the NRC waste management programs, the essential elements of a performance assessment for a radioactive waste disposal site are: (i) a mathematical representation (description) of the essential elements of the site and engineered system; (ii) an analysis of events that would affect long-term facility performance; (iii) an analysis of the movement of radionuclides from the location of emplacement to the general environment; (iv) a computation of a facility performance measure (e.g., doses to members of the general population); and (v) an evaluation of uncertainties in the estimate of performance. Quantitative estimates of disposal facility performance are matched to need: deterministic, bounding analyses for simple problems; and

Table II. Regulatory Basis for NRC's Performance Assessment Programs

Authority	*NRC Regulation*
High-Level Radioactive Waste	
Nuclear Waste Policy Act of 1982 (Public Law 97-425) Nuclear Waste Policy Amendments Act of 1988 (Public Law 100-203) Energy Policy Act of 1992 (Public Law 102-486)	10 CFR Part 60 (48 *FR* 28194; 61 *FR* 64257) [a] 10 CFR Part 63 (in preparation) [b]
Low-Level Radioactive Waste	
Low-Level Radioactive Waste Policy Act of 1980 (Public Law 96-573) Low-Level Radioactive Waste Policy Amendments Act of 1985 (Public Law 99-240)	10 CFR Part 61 (47 *FR* 57446)
Nuclear Materials Decommissioning	
Atomic Energy Act of 1954 (Public Law 83-703), as amended Energy Reorganization Act of 1974 (Public Law 93-438)	Collection of regulations specified in portions of 10 CFR Parts 20, 30, 40, 50, 70, and 72

[a] NRC's generic geologic disposal regulation.
[b] NRC's proposed site-specific regulation for Yucca Mountain, Nevada.

probabilistic analyses for more complex problems, with larger uncertainties. Performance assessment can be an effective link among disposal facility performance, site characterization, and facility design so that disposal system knowledge is obtained and integrated in a systematic and efficient way. Performance assessments can be used to prioritize reviews and determine key areas for interactions with licensees. Performance assessment can be used to structure documentation of the technical basis, model assumptions, and data needed for a successful demonstration of compliance with the safety standard.

Performance assessment can be performed iteratively, for many reasons, including, the need to integrate site characterization and facility design activities. For example, simple screening calculations can provide insights on the performance of proposed sites and conceptual designs to enhance the prospects of selecting a suitable site. Moreover, in designing a radioactive waste disposal facility, performance assessment can be used to optimize disposal facility design to achieve potentially higher levels of performance for the overall system. In characterizing a site, initial screening analyses should help the performance assessment analyst to identify important issues and data needs that must be factored into any program to investigate and evaluate a candidate site. As more site information is collected, the analyst should reevaluate modeling assumptions, conceptual models, and data needs, and revise the site characterization program accordingly, to obtain data identified as most needed to reduce uncertainty and defend assessment results.

To provide a defensible result, uncertainty and sensitivity analyses need to be part of the performance assessment. Analyses of uncertainty and sensitivity drive the performance assessment process toward a defensible final decision on facility compliance. The most commonly cited sources of uncertainty in performance assessment are uncertainty about conceptual models (model uncertainty), which may include doubts about scenarios or future state uncertainty, processes and events, and uncertainty regarding data, parameters, and coefficients used in models (parameter uncertainty). The objective of uncertainty analysis is to assess the degree of variability in calculated results as a function of the variability in model and input parameters. The treatment of model uncertainty necessitates analyzing those conceptual model alternatives not refuted by site data. Methods for treating parameter uncertainty are usually based on establishing the degree of belief in a value or range of values for each parameter selected for model input. The objective of sensitivity analyses is to identify important parameters by determining the relative effect of each input variable on the resulting system. Sensitivity studies on the intermediate results from sub-system models (infiltration, source term, transport media, etc.) also may provide valuable insight on those factors that most influence the performance of the overall system. Before a compliance demonstration can be made, a number of data collection and assessment iterations may need to be undertaken to evaluate alternative conceptual models, and eliminate some, to narrow parameter ranges. Gauging uncertainty through formal validation or confidence building exercises, such as model calibration, history matching, and prediction, is often not possible because of the time scales inherent in performance assessment. What is important, however, is being able to build confidence that the models perform as they are designed, capture relevant features and processes of the disposal system being modeled, and reflect the uncertainty in system knowledge.

1.2 Outline of Paper

This paper examines NRC staff performance assessment activities in three program areas: HLW, LLW, and nuclear materials decommissioning. In each of these areas, this paper will: (i) provide some background and history; (ii) discuss the staff's methodology and approach; (iii) review current staff activities; (iv) identify current regulatory issues pertaining to performance assessment; and (v) discuss future staff activities. Within NRC, the Commission relies upon the Advisory Committee on Nuclear

Waste (ACNW) to provide some independent oversight of the agency's' waste management programs, including those in the area of performance assessment. Following a review of the staff's performance assessment programs, the paper will discuss some of the issues currently being tracked by the ACNW.

2. NRC WASTE SYSTEM PERFORMANCE ASSESSMENTS

2.1 High-Level Waste Program

As a matter of background, it should be noted that NRC is one of three Federal agencies with a role in the disposal of HLW.[11] The U.S. Department of Energy (DOE) has the responsibility for the actual disposal of HLW – developing the geologic repository and operating it. The U.S. Environmental Protection Agency (EPA) has been charged with determining the general environmental standards that the geologic repository developed by DOE must meet. NRC is the regulatory agency charged with promulgation and enforcement of implementing regulations designed to assure that the geologic repository will be designed, built, and operated in a manner that will provide confidence that applicable standards will be met. Prior to 1987, DOE was evaluating several sites as candidate for a potential geologic repository for HLW. However, through the Nuclear Waste Policy Amendments Act of 1987, Congress directed DOE to evaluate only the Yucca Mountain (Nevada) site.

2.1.1 Background

Since its inception in the mid-1970's, the NRC's HLW repository program has relied on performance assessment to accomplish several objectives. It has been applied to the initial formulation of the NRC's HLW regulations (10 CFR Part 60) as well as to the generation of formal and informal comments on EPA's HLW standards at various stages of development. Currently, pursuant to the Energy Policy Act of 1992 (EnPA), NRC is using its performance assessment capability to assist in developing site-specific regulations for the proposed geologic repository at Yucca Mountain, consistent with the 1995 NAS recommendations.[12] Also, the staff is applying its performance assessment capability in HLW to the on-going review of DOE's pre-licensing program, which includes the staff review of the forthcoming DOE *Viability Assessment* (VA).[13]

DOE is required, by current regulation, to provide a comprehensive performance assessment in any potential license application for a geologic repository. NRC is obligated to ensure in its review of a license application, that the proposed repository will adequately protect public health and safety. The staff's strategy for conducting a licensing review of DOE's performance assessment calls for an audit review of the performance assessment in its entirety, supplemented by more detailed reviews of those sections that are of greatest safety significance[14] – for example, the DOE's approach to modeling the contribution of particularly significant engineered and natural barriers to overall system performance. As a part of its review process, the NRC staff will rely heavily on site data collected by DOE, but will perform independent estimates of the potential performance of the repository, as described in the license application. It will be necessary, therefore, for the NRC staff to decide which portions of DOE's assessment require independent verification through more detailed quantitative analyses.

NRC's performance assessment activities have also supported pre-licensing exchanges concerning characterization of the Yucca Mountain site. In its 1989 *Site Characterization Analysis* (SCA), the NRC staff commented on DOE's statutory *Site Characterization Plan* (SCP)[15], and highlighted the need for total-system performance assessments early in the site characterization program.[16] The staff also expressed concern that DOE needed to improve the technical integration of its site characterization program and emphasized the important role that performance assessment should play to integrate data-

gathering activities and to guide evaluations of those data.

2.1.2 Steps in an Integrated HLW Performance Assessment

The general approach to developing and analyzing a total-system performance assessment can be defined by the following steps, outlined below, and shown in Figure 1. For the NRC performance assessment efforts completed thus far, all these steps were performed to various levels of detail.

Step No. 1 – System Description

The repository is broken into its component parts for the purposes of modeling. These components include the waste form, the mined geologic disposal system (including engineered barriers such as the waste package), and the portion of the geosphere surrounding the geologic repository through which the radionuclides, in time, may migrate. The system description therefore should include information that supports the development of models describing repository performance, and should identify data and parameters for the models used to support the Scenario Analysis and Consequence Analyses (Step Nos. 2 and 3, respectively – described below).

Step No. 2 – Scenario Analysis

Scenarios representing alternative possible future states of the environment, as they reflect the repository, are identified and screened. For NRC analyses, scenarios are generally formulated based on classes of events and processes external to the repository system. [Events and processes internal to the repository system are treated in the Consequence Analysis (Step No. 3 – described below). A possible exception to this general rule is the treatment of criticality.] Scenarios are screened-out of the analyses if their probabilities are sufficiently low. Scenarios with little impact on performance may be coalesced and combined with the scenario representing no external events. Probabilities are estimated for the selected scenarios.

Step No. 3 – Consequence Analysis (release, transport, and dose modeling)

Models are developed to describe the performance of the subsystems of the geologic repository and are linked to describe overall performance. Overall repository performance, in terms of cumulative releases of radionuclides to the accessible environment, over a specified time period, is calculated for each scenario, using numerous simulations of possible ranges of parameter values. For each realization of parameter values, overall performance measures are calculated, which may include cumulative radionuclide releases to the accessible environment and peak individual dose.

Step No. 4 – Probabilistic Performance Measure Calculation: the Complimentary Cumulative Distribution Function (CCDF)

For each scenario identified in Step No. 2, the consequences, in terms of normalized cumulative releases of radionuclides to the environment over a specified period of time and for peak individual dose, are calculated and the results displayed in a plot of consequence value versus the probability that such consequences are exceeded (e.g., the CCDF of total releases to the accessible environment, the CCDF of peak individual dose). In addition to a statistical representation of the consequences, summary statistical measures, such as the mean of the peak individual dose may also be computed. The total results incorporating scenario probability, and the probability of each parameter realization, are compared with regulatory limits.

Figure 1. Components of a total system performance assessment.

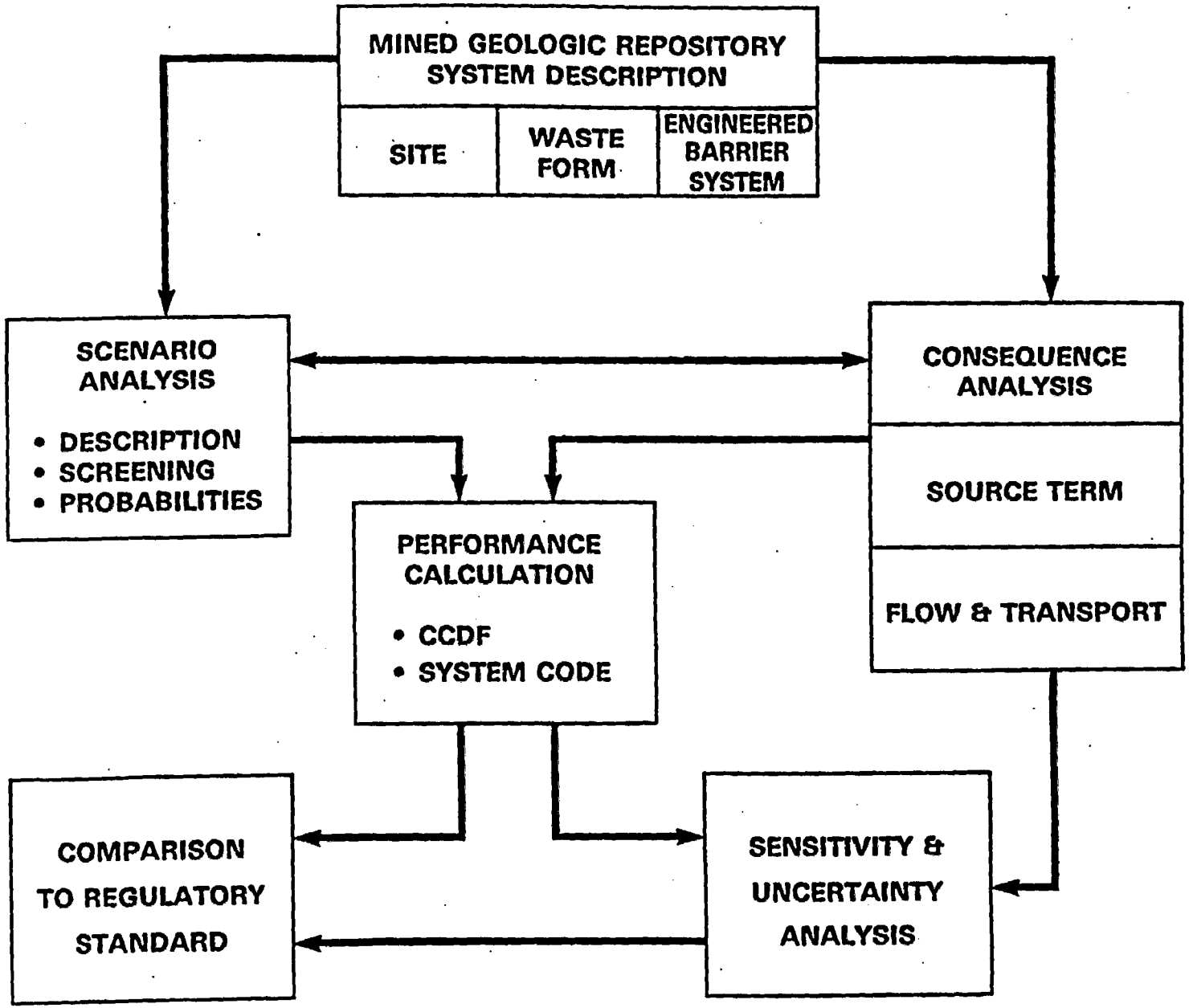
MINED GEOLOGIC REPOSITORY SYSTEM DESCRIPTION
SITE
WASTE FORM
ENGINEERED BARRIER SYSTEM
SCENARIO ANALYSIS
• DESCRIPTION
• SCREENING
• PROBABILITIES
CONSEQUENCE ANALYSIS
SOURCE TERM
FLOW & TRANSPORT
PERFORMANCE CALCULATION
• CCDF
• SYSTEM CODE
COMPARISON TO REGULATORY STANDARD
SENSITIVITY & UNCERTAINTY ANALYSIS

Step No. 5 – Sensitivity and Uncertainty Analysis
A sensitivity analysis is conducted to evaluate the fractional change in calculated results caused by fractional changes in the values of input parameters and data. An uncertainty analysis is also conducted to quantify the uncertainty in performance estimates in terms of the major sources of uncertainty in input parameters. Uncertainty in modeling, however, including conceptual model uncertainty has not been routinely quantified as part of NRC's HLW performance assessment efforts thus far.

Step No. 6 – Documentation
Documentation is developed to clarify the assumptions used in the analysis, their bases, and the implications of their uses; this step includes the choice of parameter values or distributions of parameters. An important aspect is documentation of auxiliary analyses, which evaluate the adequacy of the consequence modules and the assumptions underlying them, synthesize data into parameters, and provide other insights.

2.1.3 History of the NRC HLW Performance Assessment Program

The NRC performance assessment program originated in the early 1970s. In 1976, the NRC contracted with SNL to develop a comprehensive performance assessment methodology for the evaluation of HLW disposal, initially for bedded salt formations, which was one of several disposal media under consideration at that time. The various components of the performance assessment methodology were developed and applied to a hypothetical HLW repository in salt.[17] The SNL performance assessment methodology was later refined and extended to HLW repositories in other geologic media, namely basalt and tuff. The revised performance assessment methodology is described in Bonano *et al.*[18] which includes an example application to a hypothetical repository in basalt. The methodology was further extended for a repository in unsaturated fractured tuff formations.[19] In contrast to the previous SNL studies for the bedded salt and basalt, the latter study did not demonstrate the performance assessment methodology on a hypothetical repository in tuff.

However, in the late 1980's, the staff began to develop an in-house performance assessment capability through a series (so-called phases) of *Iterative Performance Assessment* (IPA) exercises, as discussed below. Based on the development of this capability, the staff was prepared to review and comment on the *Total-System Performance Assessments* (TSPAs) produced by DOE (and its contractors).[20] As noted above, the staff's comments, documented in the SCA, strongly urged DOE to engage in a program of continuing, iterative performance assessments.[21]

IPA Phase 1: NRC's first IPA exercise, IPA Phase 1, was completed in 1991 and was published as NUREG-1327.[22] It was undertaken primarily to demonstrate NRC's ability to conduct a performance assessment analysis and relied on limited Yucca Mountain data that were available at the time, employed numerous simplifying assumptions, and evaluated only a small number of scenario classes. The IPA Phase 1 analysis produced a quantitative estimation of total-system performance, using available mathematical models and computer codes supplemented by a number of auxiliary analyses that supported and evaluated assumptions invoked in the total-system calculations. The focus of the calculations was the total-system performance measure as stipulated in the containment requirements of 40 CFR Part 191[23], i.e., cumulative releases of radionuclides to the accessible environment over 10,000 years. Every step of the overall performance assessment methodology was exercised, including uncertainty and sensitivity analyses. Sensitivity analysis was performed to identify those input parameters with the largest relative influence on the overall performance measure and provided some insights regarding data needs and their

relative priorities. Overall, the IPA Phase 1 effort was performed jointly by staff members from NMSS and the Office of Nuclear Regulatory Research (RES).

In summary, the principal accomplishments of IPA Phase 1[24], using preliminary data and numerous assumptions, were as follows:

- Modeled a liquid pathway for an undisturbed scenario class using:
  - the *NEFTRAN* computer code[25], to simulate transport in the saturated zone,
  - four vertical transport legs under the repository footprint to account for spatial variation in site properties,
  - a treatment of waste form dissolution (modified from *NEFTRAN* defaults), and
  - a non-mechanistic model of waste package failure.

  Modeling of the liquid pathway was also extended to treat pluvial conditions (i.e., climate change).

- Developed and used a total system computer code, to represent total system performance, as a CCDF, for a limited set of scenario classes,

- Developed a model and corresponding computer code to treat human intrusion by exploratory drilling.

- Performed a preliminary statistical analyses of results (sensitivity) using several techniques, including Latin Hypercube Sampling (LHS)[26] and regression analysis methods.

- Executed several auxiliary analyses, which looked at:
  - the potential for non-vertical hydrologic flow,
  - the sampling requirements for CCDF generation,
  - the consequences of Carbon-14 gaseous releases, and
  - the statistical analysis of available hydrologic data for input to flow and transport models.

The results of the Phase 1 analysis were used to construct the CCDF of normalized cumulative radionuclide releases to the accessible environment over the 10,000-year period of regulatory concern, as prescribed in the 1985 EPA standard. These results are shown in Figure 2. Additional, tentative results of the IPA Phase 1 effort included the following:

- The proposed 1988 geologic repository design envisioned that waste be emplaced over a substantial area, which appears to have been an important aspect in determining performance. Some important aspects dependent on spatial variability included:
  - waste package failure,
  - thickness of overburden to water table, and
  - potential for rock units to sustain fracture flow.

- Carbon-14 gaseous releases could be an important factor in overall repository performance.

- Two-dimensional modeling of Yucca Mountain hydrology showed significant lateral movement of water for unsaturated ground-water infiltration rates greater than 0.2 millimeters/year. Such

Figure 2. Composite CCDF curve for the scenario classes considered in IPA Phase 1. Results are based on 598 vectors, yielding 1196 values, 1094 eliminating duplication. This graph presents results from an initial demonstration of the staff capability to conduct a performance assessment. This graph, like the demonstration, is limited by the use of many simplifying assumptions.

TOTAL CCDF
(10,000 years)

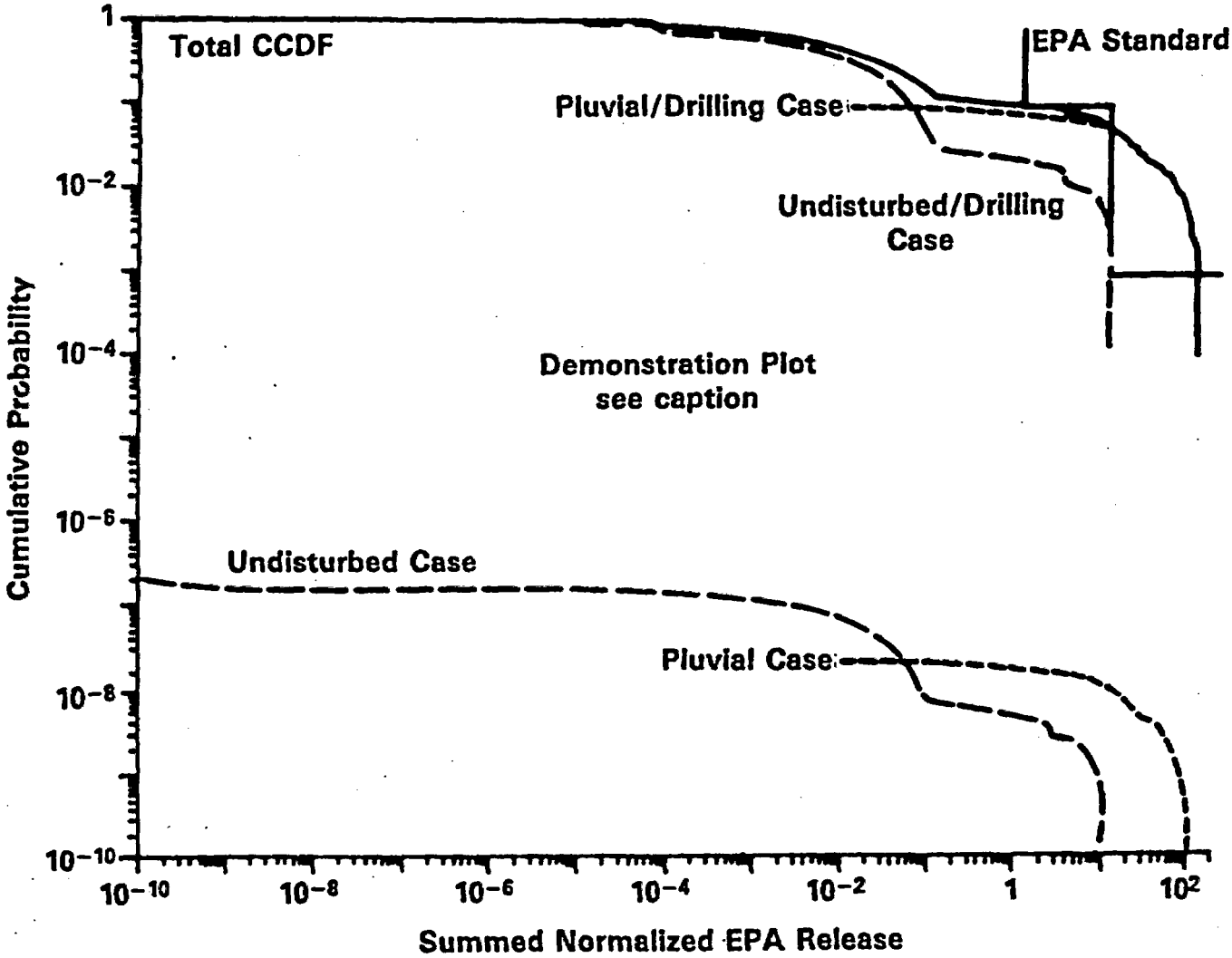

non-vertical flow could be an important factor in geologic repository performance

- For scenario classes allowing releases along the liquid pathway, the most significant contributors to the consequences represented by the CCDF were isotopes of plutonium. As plutonium behavior is poorly understood, large uncertainties exist regarding:
  - colloids,
  - retrograde solubility, and
  - sensitivity of chemistry to oxidation state.

- For releases along the liquid pathway, the important liquid parameters appear to be:
  - infiltration flux,
  - fraction of infiltrating ground-water contacting the waste form,
  - uranium matrix solubility, and
  - saturated hydraulic conductivity for the Calico Hills vitric unit.

IPA Phase 2: Planning for IPA Phase 2 began before the publication of the Phase 1 results. The IPA Phase 2 technical work began in 1991, was completed in 1993, and the documentation and review process continued into 1994 when the results where published as NUREG-1464.[27] Many of the improvements to the IPA Phase 2 analysis were based, in part, on the preliminary recommendations made as a result of the insights gained from the Phase 1 effort (see Table III). IPA Phase 2 involved considerably more sophistication in model and computer code development than Phase 1 (see Figure 3). Moreover, IPA Phase 2 involved both the NRC (NMSS and RES) and its new technical assistance contractor, the Center for Nuclear Waste Regulatory Analyses (CNWRA) in San Antonio, Texas.

In summary, the principal accomplishments of IPA Phase 2[28] were as follows:

- *TPA Computer Code Development* The revised TPA computer code (see Figure 4) consisted of an *executive module* and several computational modules, which are linked together to calculate, in a Monte Carlo probabilistic manner, the total-system performance of a geologic repository. Both cumulative releases to the accessible environment and radiologic population dose are computed. In addition to controlling the execution of the various modules, the executive module computed the total CCDF by combining the results from the consequence modules and the probabilities of various scenario classes, which were determined separately. The TPA executive module also controlled data transfer between modules, including: (a) global data common to all modules; (b) sampled data, parameters sampled from a LHS module; and (c) special input files for the various scenarios or particular consequence modules. The modular construction of this total system code is expected to allow for relatively easy modification or replacement of the various consequence modules, without changing the overall structure of the TPA computer code.

- *Scenario Analysis* Scenario analysis is comprised of scenario identification, scenario screening, and estimates of scenario probabilities. Four fundamental events were combined to form 16 mutually exclusive scenario classes. These fundamental events are: (a) change to a pluvial climate; (b) human intrusion by exploratory drilling; (c) seismic disruption; and (d) magmatic disruption. Only four scenarios classes were selected for inclusion in the simulations to estimate the radionuclide release CCDF representing repository performance. Of the remaining 11 scenario classes, another 5 were included in the simulations for the purpose of comparing undisturbed repository performance with disruptions caused by single disruptive events.

Table III. IPA Phase 1 Recommendations Implemented during IPA Phase 2

IPA Phase 1 Recommendation	*Implementation in IPA Phase 2* [a]	*Section of IPA Phase 2 Report*
Improvements and Extensions to Modeling:		
General		
Add the capability for modeling additional scenario classes.	Limited	Sections 6.2 and 6.4
Control the CCDF generation with the system code, using the consequence codes as subroutines, instead of generating data sets external to the system code.	Full	Chapter 2
Acquire, test, and evaluate codes that SNL developed for a repository in the unsaturated zone.	Full	Chapter 4, Appendices C, G, and J
Evaluate additional computer codes, which could not be acquired and evaluated during the IPA Phase 1 effort, to determine whether existing codes can meet the NRC modeling needs, or whether additional code development is needed.	Limited	Chapter 4, Appendices C, G, and J
Explore, with the CNWRA, the adaptation of the Fast Probabilistic Performance Assessment methodology to generate the total system CCDF.	Limited	Section 8.8
Perform a sensitivity analysis, using both drilling and ground-water transport parameters.	No longer applicable	—
Flow and Transport		
Refine groundwater modeling (e.g., by considering more dimensions).	Limited	Chapter 4
Incorporate a model of gas-pathway transport in the calculation of the CCDF.	Full	Section 4.3
Include flow and transport through the saturated zone.	Full	Chapter 4
Use a more sophisticated computational model for transport through partially saturated, fractured rock.	Limited	Chapter 4

a "Limited" and "full" are relative terms intended to convey the degree of modeling improvement between IPA Phase 1 and Phase 2. The term "limited" suggests only marginal modeling improvement over IPA Phase 1, whereas "full" suggests significant modeling improvement over IPA Phase 1.

Table II (continued)

IPA Phase 1 Recommendation	*Implementation in IPA Phase 2*	*Section of IPA Phase 2 Report*
Source Term		
Attempt to develop or use a previously developed mechanistic model of waste-package failure.	Limited	Chapter 5
Treat the repository as a source of radionuclides distributed in time and space.	Full	Chapters 4 and 5
Improvements and Extensions to Auxiliary Analyses:		
Perform detailed geochemical analyses to investigate the use of K_ds in estimating radionuclide transport.	Limited	Appendix D
Evaluate the importance of thermally and barometrically driven air flow on repository performance at Yucca Mountain.	Limited	Sections 4.3, 5.4.2, and 5.6.3
Perform detailed hydrologic analyses for Yucca Mountain, to provide a better input to the transport analysis and to examine, in more detail, various alternative hypotheses regarding hydrology at Yucca Mountain.	Limited	Appendices E and I
Recommendations for Additional Scientific Input:		
Develop and demonstrate a mathematically rigorous, scientifically robust method for scenario analysis.	Limited	Chapter 3
Obtain geoscience input for modeling volcanism.	Full[b]	Section 6.4
Obtain geoscience and hydrologic input for modeling faulting, uplift, and subsidence at Yucca Mountain.	Limited	Section 6.2, Appendices F and H
Obtain field and laboratory data on the transport of gaseous radionuclides, especially Carbon-14, at Yucca Mountain.	Limited	Sections 4.3 and 5.6.3, Appendix H

b Despite implementation of this IPA Phase 1 recommendation in Phase 2, the staff believes that significant additional work in this area is still needed. See Sections 6.4 and 6.6 for the staff's specific recommendations.

Figure 3. Components of a total-system performance assessment.

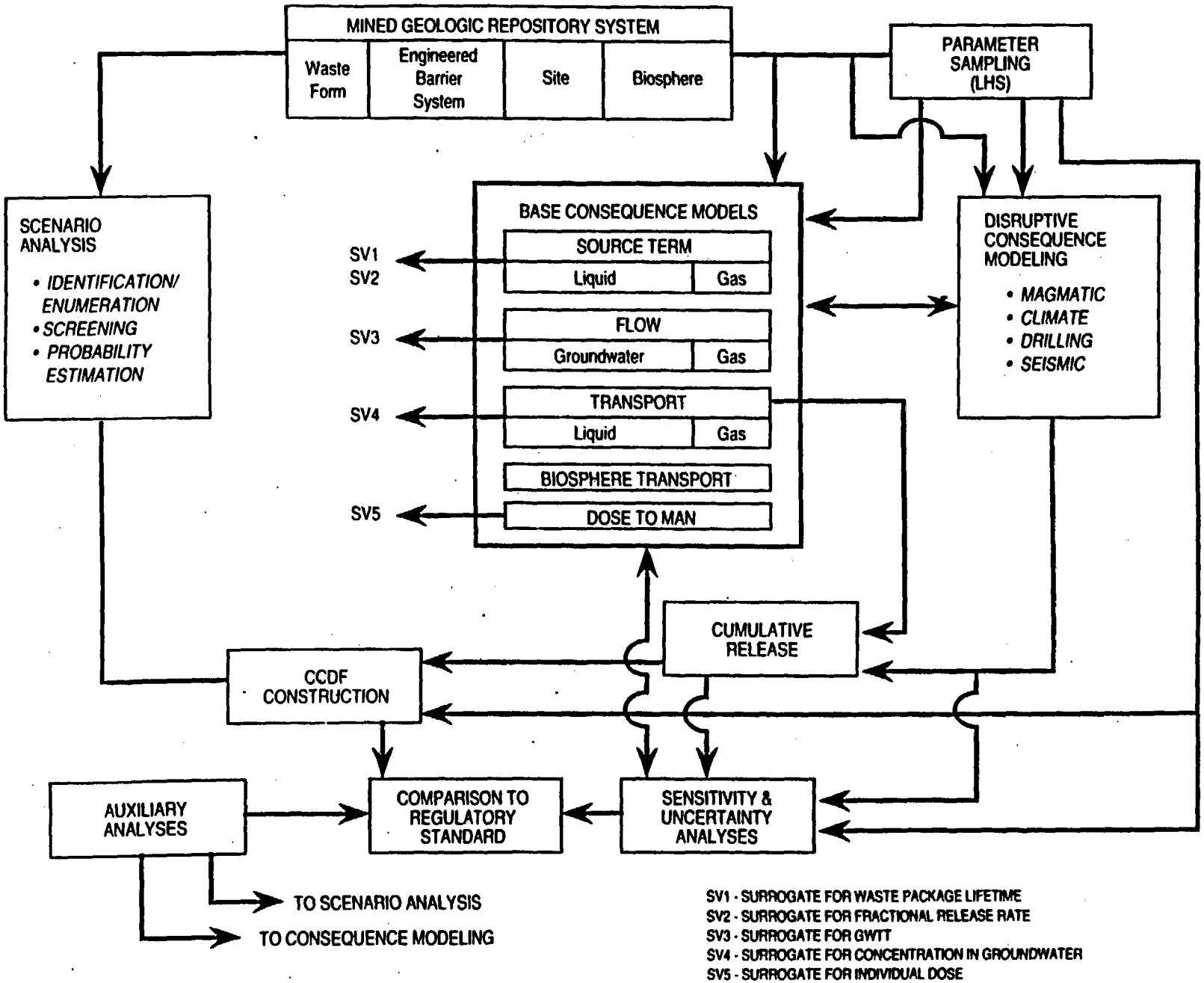
MINED GEOLOGIC REPOSITORY SYSTEM
Waste Form
Engineered Barrier System
Site
Biosphere
PARAMETER SAMPLING (LHS)
SCENARIO ANALYSIS
• IDENTIFICATION/ ENUMERATION
• SCREENING
• PROBABILITY ESTIMATION
BASE CONSEQUENCE MODELS
SOURCE TERM
Liquid
Gas
FLOW
Groundwater
Gas
TRANSPORT
Liquid
Gas
BIOSPHERE TRANSPORT
DOSE TO MAN
SV1
SV2
SV3
SV4
SV5
DISRUPTIVE CONSEQUENCE MODELING
• MAGMATIC
• CLIMATE
• DRILLING
• SEISMIC
CUMULATIVE RELEASE
CCDF CONSTRUCTION
AUXILIARY ANALYSES
COMPARISON TO REGULATORY STANDARD
SENSITIVITY & UNCERTAINTY ANALYSES
TO SCENARIO ANALYSIS
TO CONSEQUENCE MODELING
SV1 - SURROGATE FOR WASTE PACKAGE LIFETIME
SV2 - SURROGATE FOR FRACTIONAL RELEASE RATE
SV3 - SURROGATE FOR GWTT
SV4 - SURROGATE FOR CONCENTRATION IN GROUNDWATER
SV5 - SURROGATE FOR INDIVIDUAL DOSE

Figure 4. Flow diagram showing the elements of the IPA Phase 2 computer code. These elements are described in Wescott *et al.* (1995).

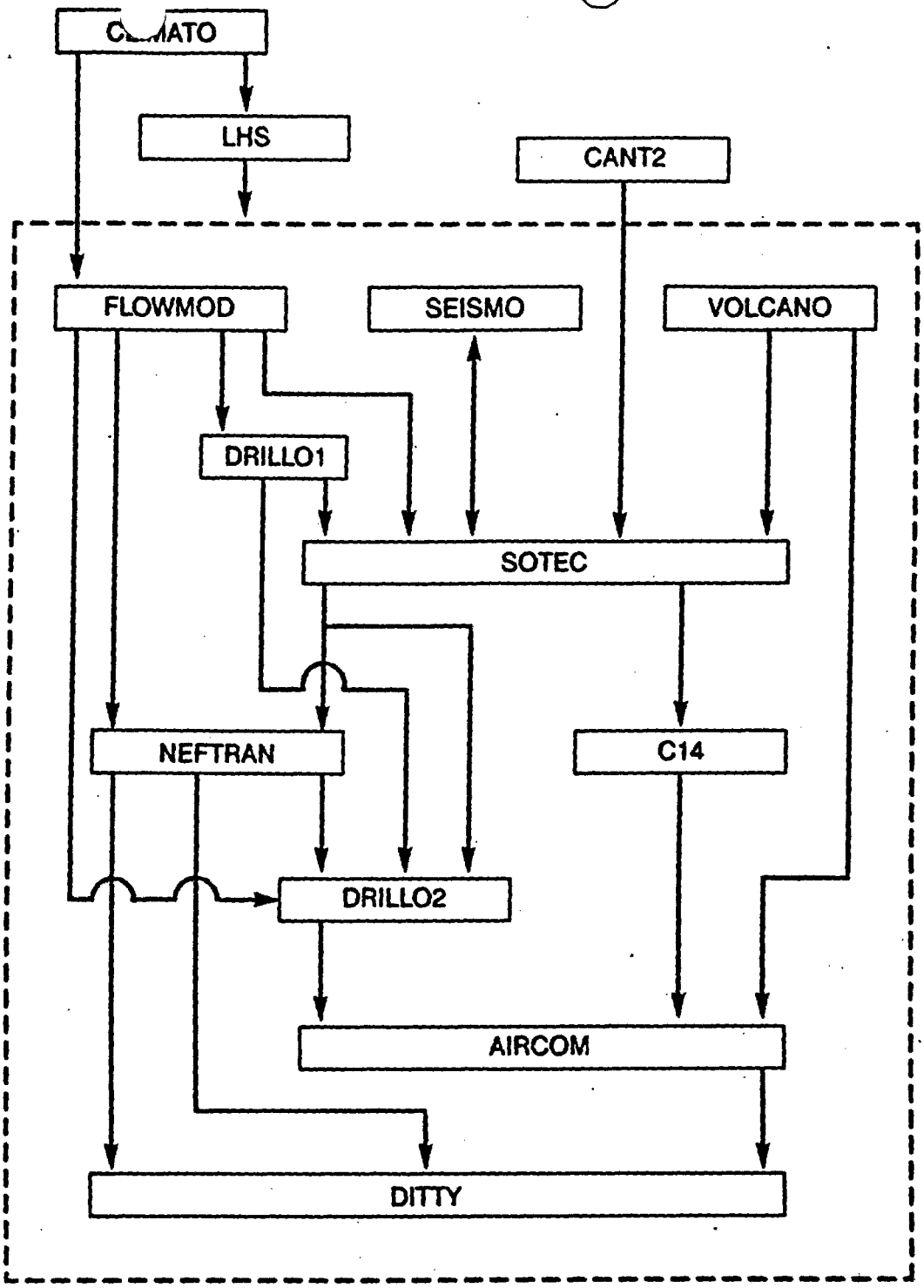
CLIMATO
LHS
CANT2
FLOWMOD
SEISMO
VOLCANO
DRILLO1
SOTEC
NEFTRAN
C14
DRILLO2
AIRCOM
DITTY

- *Flow and Transport Analysis* The flow and transport analysis consisted of constructing models of radionuclide transport from the source term through both liquid and gaseous pathways. For the liquid pathways, the repository was divided into seven distinct regions, to represent spatial variability of model parameters over the repository footprint. Radionuclide transport in ground water was assumed to be vertical in the unsaturated zone and primarily horizontal along the water table in the saturated zone. Thus, a water transport pathway, for a particular region, consisted of a series of individual one-dimensional segments, each representing a hydrologic unit associated with that region. The matrix-fracture flow characteristics of these one-dimensional flow paths, used for the TPA code simulations, were based on a detailed modeling of unsaturated flow, using a dual-continuum approach (as implemented in the *NEFTRAN II* computer code), to represent the fracture and matrix system. Gaseous transport was modeled in two dimensions, using the time-varying temperature distribution which resulted from the repository thermal loading to determine a set of time-dependent velocity fields. Time-varying releases of Carbon-14 from the source term model were tracked from the repository to the atmosphere, to determine the release over the performance assessment period and to provide input to the dose assessment model. The TPA system code provided sampled hydrologic parameters to both the liquid- and the gas- transport models, for each simulation. Although permeability for air depends on saturation, the air permeability was assumed not to be related to the liquid saturation.

- *Source Term Analysis* The source term module mechanistically modeled the interaction between waste packages and their immediate environment. Failure of waste package containers was modeled as occurring in three categories: (a) due to initial defects; (b) via corrosion of the waste package, followed by buckling; and (c) due to disruptive events. The initiation of corrosion was assumed to require the presence of water in the liquid state, which in turn was assumed to depend on whether the temperature computed for a location had dropped below the boiling point. After initiation, corrosion proceeded according to sampled corrosion parameters supplied by the TPA system code. Modeling of spent nuclear fuel alteration, dissolution, and near-field transport (the last two processes for releases in the liquid pathway only) was employed to determine the time-varying liquid and gaseous releases for use by the transport models.

- *Disruptive Consequences Analysis* Disruptive consequence modeling estimated the effects of four disruptive events on the performance of the geologic repository. The drilling model assumed a random process to determine the number, location, and time-of-drilling for exploratory boreholes, and whether a waste package canister was hit for each simulated borehole. Excavated waste or contaminated rock provided a surface release for transfer to the total release and dose calculations. The seismo-mechanical model determined waste package failure of the corrosion-weakened waste package canisters from a randomly-sampled earthquake acceleration and supplied the information to the source term code, to calculate releases. The magmatic model randomly selected the time of the magmatic event, its size, location, and orientation. Distributions for these parameters were based on geologic evidence. The intersection of these magmatic features, both dikes and cones, with the repository layout, determined the amount of the emplaced inventory contributing to the releases to the accessible environment (either to the groundwater or surface, or, in the case of extrusive magmatic events, as an airborne release). Climate change was modeled by a shift in the distribution assumed for infiltration, and the depth to the water table under the repository horizon.

- *Dose Assessment* A dose assessment capability was included as part of the TPA system code

activity. The dose assessment provided estimates of population and individual effective dose equivalents for each simulation. The dose model employed a static biosphere and determined dose to humans from five exposure pathways: (a) inhalation; (b) air submersion; (c) ingestion of vegetable crops; (d) ingestion of animal products; and (e) ground-shine. Dose related parameters were not sampled in the analyses.

- ***Sensitivity and Uncertainty Analysis*** With the simulation results from nine scenario classes and 400 realizations from the sampled parameters, sensitivity and uncertainty analyses were performed. The regression analyses included stepwise regression analysis to identify the most significant variables and the construction of linear and transformed regression models, to test the ability of regression modeling to emulate the performance calculation with a limited set of variables. A number of coefficients were computed from the regression analysis, to represent parameter sensitivity and uncertainty. Differential analysis was performed using additional system code runs with selected input variables (without sampling). Sensitivity and uncertainty coefficients were calculated directly and compared with those determined from the regression analysis. An uncertainty coefficient was defined and computed to give the fraction of performance.

- ***Analytical Results*** Analyses of the results of the TPA system code simulations also included scatter plots of the releases from various disruptive scenarios compared with the base case releases; sensitivity plots showing the sensitivity of the CCDF to various screening criteria; and histograms of calculated variables such as approximations to waste package failure times and ground-water travel times.

Fourteen auxiliary analyses were also conducted to support the tasks listed above. Most of the auxiliary analyses support modeling in the areas of regional hydrology, local infiltration, geochemistry, and radionuclide transport. These analyses provided inputs to the performance assessment consequence models such as: (i) the transport characteristics of flow paths; (ii) elevation of the water table for the pluvial case; and (iii) geochemical parameters for liquid and gas transport. Other analyses supported the source term model by determining volatile radionuclides that could be released during a magmatic event, and providing a basis for using a representative waste package for the source term for each of the seven repository regions modeled.

The results of the IPA Phase 2 simulations, which were based on limited data and preliminary models, indicated non-compliance with the EPA release standard, where the probability of the summed normalized cumulative release exceeding the EPA limit of 1 is greater than 0.1 (Figure 5). Median population effective dose equivalents exceed 10^5 person-rems (see Figure 6). The dominant contributor to the EPA normalized releases is Carbon-14, primarily in the gaseous pathway. The primary contributor to population dose is from the liquid pathway and the ingestion of beef raised on a hypothetical farm 5 kilometers from the proposed geologic repository at Yucca Mountain. Major radionuclides identified as contributing to dose include Niobium-94, Lead-210, Americium-243, and Neptunium-237.

Current NRC subsystem performance requirements[29] are designed to add to the confidence that the overall system requirements will be met. At the time Phase 2 was undertaken, the NRC staff and those outside the NRC questioned the effectiveness of these subsystem requirements; consequently some effort was directed to studying their effectiveness, which may eventually result in a change in regulatory approach. Even though no direct quantitative correlation between subsystem requirements and the

Figure 5. Comparison of CCDFs for IPA Phase 1 and IPA Phase 2 results. This graph presents results from the demonstration of the staff capability to conduct a performance assessment. This graph, like the demonstration, is limited by the use of many simplifying assumptions.

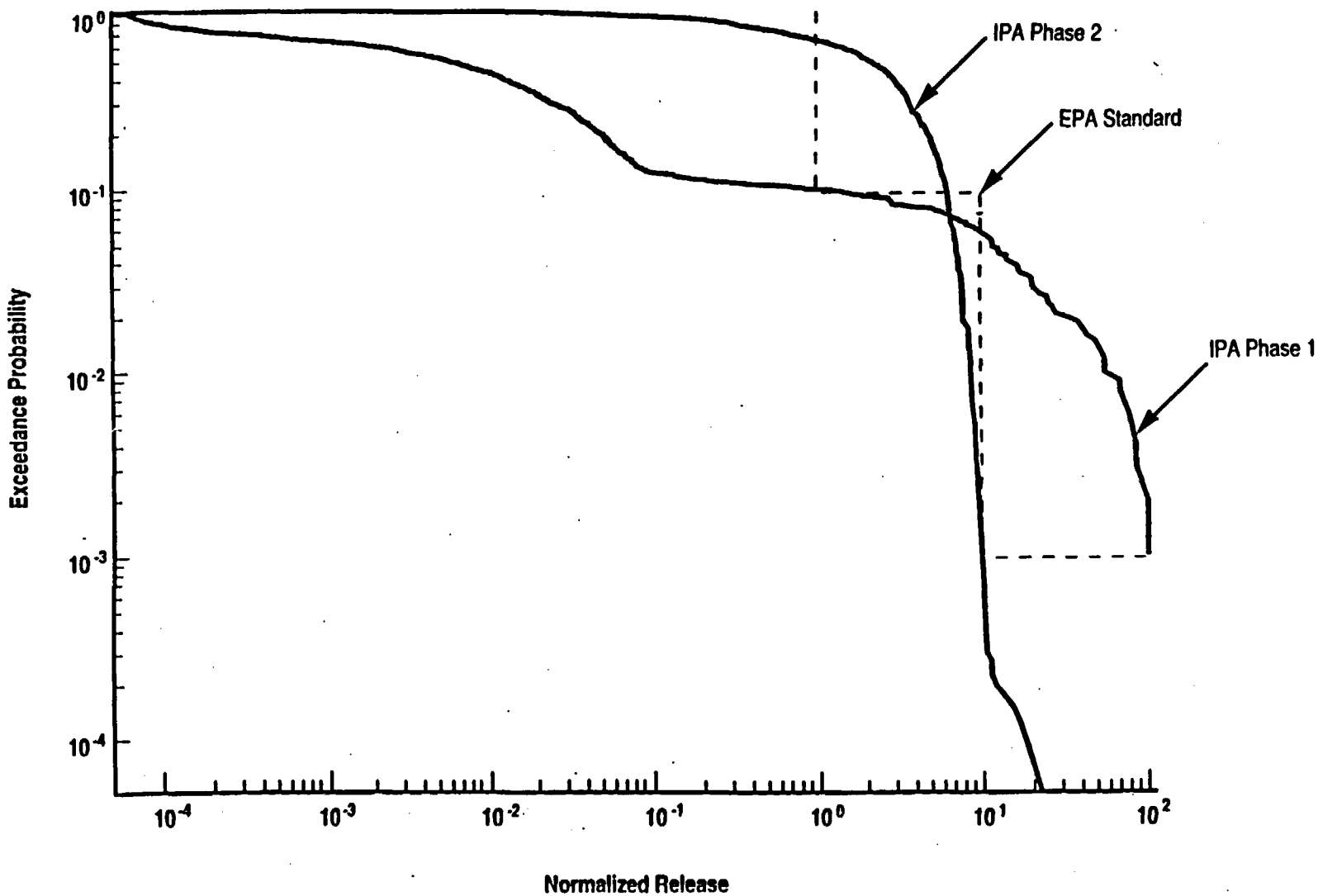
IPA Phase 2
EPA Standard
IPA Phase 1
Exceedance Probability
10^{0}
10^{-1}
10^{-2}
10^{-3}
10^{-4}
10^{-4}
10^{-3}
10^{-2}
10^{-1}
10^{0}
10^{1}
10^{2}
Normalized Release

Figure 6. Illustration of annual individual dose calculation from IPA Phase 2 (Wescott *et al.*, 1995).This illustration presents results from the demonstration of the staff capability to conduct a performance assessment. This illustration, like the demonstration, is limited by the use of many simplifying assumptions.

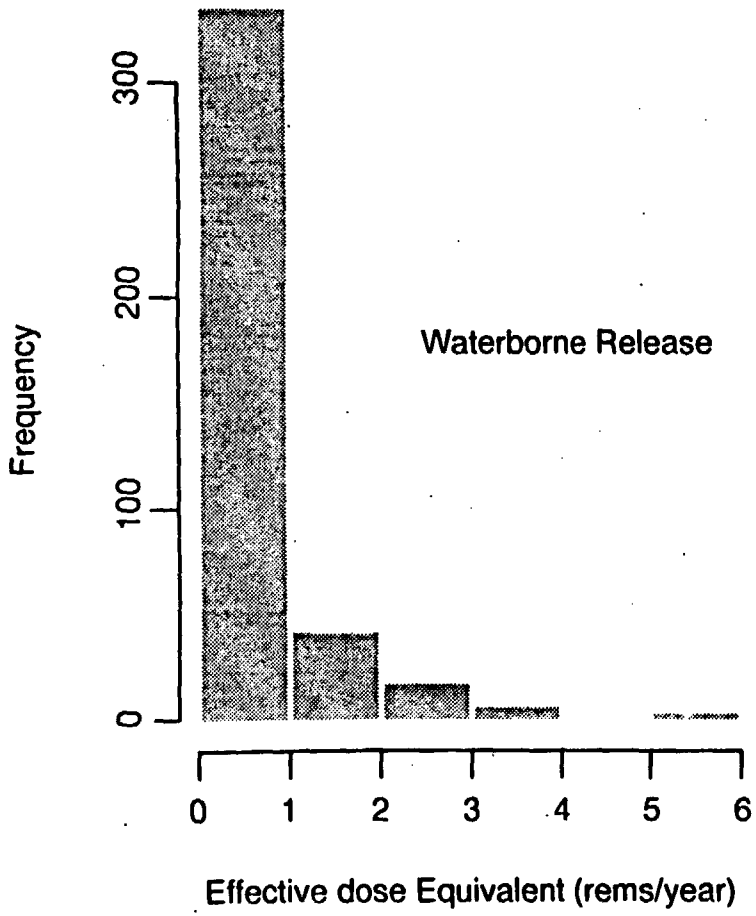
Waterborne Release
Frequency
0
100
200
300
0
1
2
3
4
5
6
Effective dose Equivalent (rems/year)

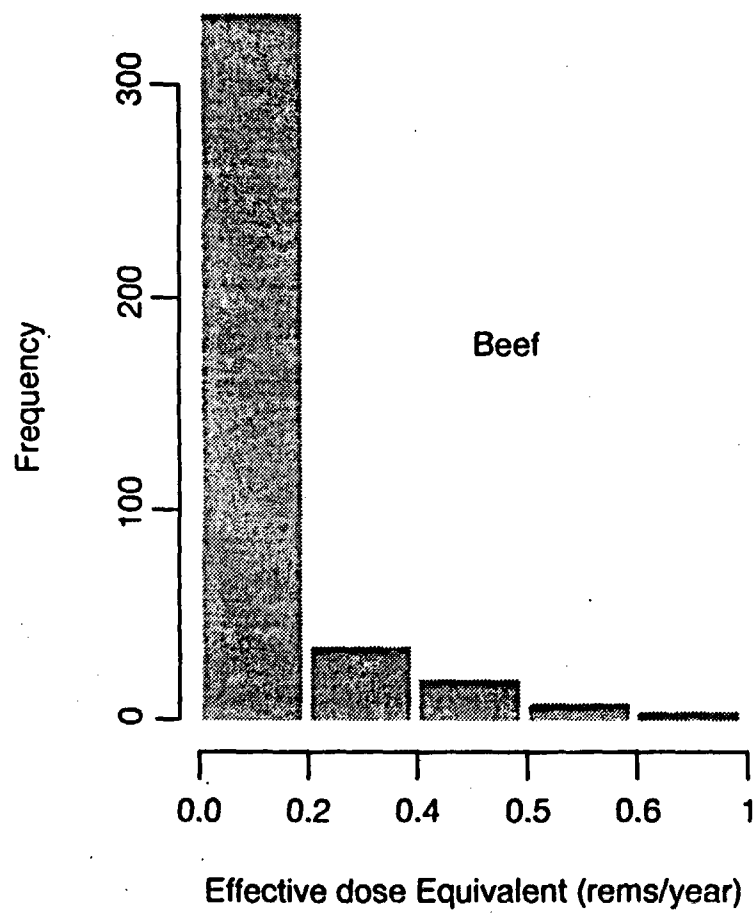
Beef
Frequency
0
100
200
300
0.0
0.2
0.4
0.5
0.6
1
Effective dose Equivalent (rems/year)

overall system requirement is stipulated in the current NRC regulation, an effort was made in IPA Phase 2 to determine how subsystem performance contributed to, or was related to, overall system performance.

For these analyses, only the CCDF of normalized release was used. Four measures of liquid or hydraulic travel times were considered: (i) fastest path; (ii) average; (iii) most flux; and (iv) flux weighted. Evaluation of each of these potential measures showed that long hydraulic travel times were generally correlated with smaller cumulative releases. However, the nature of the travel time distribution for the fastest path and most flux were such that most travel times were 800 and 1200 years. The distribution for average and flux-weighted travel times showed no vectors with travel times less than 10,000 years. For these reasons, the appropriateness of any given criterion was not directly evaluated. The relationship between release and waste package lifetime was found to be strong, with significant sensitivity of the CCDF to waste package lifetimes in the 300 to 1000-year range. Little correlation was found in IPA Phase 2 between the EBS release rate criterion and the normalized EPA release. Meeting the EBS release rate criterion alone did not guarantee a normalized EPA release less than 1.

The most significant information gained from the IPA Phase 2 study was determined to be insights and conclusions regarding the evaluation of the IPA Phase 2 methodology and analyses, aspects of the site and repository design that might be important to performance, and the results of the overall system and subsystem performance assessments.

In regard to the adequacy of the IPA Phase 2 methodology, it was concluded that although the methodology can and must be improved as performance assessments become more detailed and sophisticated, the present methodology was adequate to identify important parameters and processes, gain insights regarding model development and repository performance, and evaluate research and technical assistance needs.

The scientific basis for analysis, that is the published information regarding the site and repository design, was not considered adequate to represent the performance of the repository for evaluating compliance. For this reason, the most important information gained from the performance calculations is considered to be the identification of important parameters and processes and the relative effects of events on the CCDFs.

Significant insights and conclusions from model development and the sensitivity and uncertainty analysis include the following:

- The fractured unsaturated matrix of the site can greatly influence repository performance by providing pathways for fast transport of liquids and vapor. The fractured unsaturated matrix is also difficult to model realistically.

- Percolation rate was identified as the most important parameter, from the sensitivity - uncertainty analysis in scenarios where there was a distribution of both matrix and fracture flow (the non-pluvial scenario classes).

- Abstracted flow models used in IPA Phase 2 probably do not include all of the important characteristics of the flow system and should be supported by three-dimensional, non-isothermal, two-phase models.

- Fracture geochemistry appears to be more important than matrix geochemistry for gas and liquid transport.

- Corrosion- and dissolution-related parameters were found to be important, in all scenario classes, for dose and release.

- Near-field hydrothermal processes may greatly influence container lifetime in terms of wetting time and corrosion rate.

- Repository heat load is likely to be an important variable and should be evaluated in terms of performance sensitivity, in future IPA analyses.

- Uncertainty regarding the probability and consequences of the existing analysis for magmatism, justifies a more sophisticated modeling approach in this area.

The Phase 2 exercise provided several benefits to the performance assessment program, including:

- Contributing to understanding the relative roles of potential disruptive events (i.e., future states);

- Contributing to identifying the key factors controlling the estimation of total-system performance; and

- Providing the experience and insights necessary for effective pre-licensing interactions with the DOE.

The conduct of IPA Phase 2 better prepared NRC to evaluate DOE's TSPAs and to engage in pre-licensing consultations with DOE on specific technical issues of importance to repository performance for which data are lacking. Applying the total-system code provided significant insights to the NRC staff about the importance of the interactions between different components. Although the model for each one of these components can be exercised independently, the components of a repository system can interact in a complex, possibly non-linear fashion, and those interactions may only be evident and examined in the context of the total-system code. As a result, NRC is now able to evaluate more meaningfully the assumptions made by DOE and to emphasize to DOE those issues of importance to safety. The results of Phase 2 allowed NRC, given the assumptions made in the analysis and the large data uncertainties, to identify the dominant radionuclides contributing to releases to the accessible environment, the primary pathways contributing to dose to man, and the effect of specific scenarios such as climate change and magmatism. Sensitivity analyses confirm staff's intuition that corrosion of the waste canister and infiltration are important processes that need to be more carefully assessed.

In parallel with the documentation of the IPA Phase 2 activities, the staff began to develop plans for undertaking IPA Phase 3. Based on the staff's earlier IPA efforts and as a result of the review of DOE-sponsored TSPAs, the CNWRA conducted a series of 13 auxiliary analyses and module development activities to assist the staff in defining the overall scope and objectives for IPA Phase 3.[30]

More recently, the NRC staff has used its advancing IPA capability to provide technical support for its interactions with the EPA staff as it develops radiation protection standards for a potential geologic repository at Yucca Mountain pursuant to EnPA.[31] In light of the recent National Academy of Sciences'

(NAS') findings and recommendations for a site-specific environmental standard for Yucca Mountain, the NRC staff and the CNWRA undertook a limited series of technical analyses, using its IPA capability to better understand what technical challenges are faced in the implementation of health-based (dose) performance measures at Yucca Mountain. These analyses have been documented in NUREG-1538.[32]

Current Staff Activities: In planning for IPA Phase 3 in 1995, the NRC staff recognized the need to refocus its pre-licensing repository program on resolving issues most significant to repository performance. Since then, the scope of the NRC pre-licensing program was adjusted to focus on only those topics most critical to repository performance. These topics are called the *key technical issues* (KTIs).[33] These issues were identified from an on-going review of DOE's site characterization program (including its TSPAs) as well as the staff's independent work.[34] This approach calls for working with DOE, the State of Nevada, and other interested stakeholders to evaluate the significance of each of the KTIs and to develop paths to resolution, at the staff level. Identifying KTIs, integrating their activities into a risk-informed approach, and evaluating their significance for post-closure repository performance helps ensure that regulatory attention is focused where scientific uncertainties will have the greatest impact on safety, and that all elements of the regulatory program are consistently focused on these areas.

To support and integrate the technical work necessary to achieve the desired resolution in the pre-licensing phase, the staff has relied extensively on the use of performance assessment techniques. These techniques are now focused on developing the analytical tools necessary to demonstrate compliance with a single pathway dose-based, risk-informed standard. It is important to emphasize that it is not NRC's intent to require that DOE accurately predict future repository performance, but rather, to ensure that DOE has evaluated a reasonable range of possible outcomes based on what is currently known and understood, taking into consideration uncertainties in models, data, and interpretations. Insights acquired from the use of these techniques as well as extensive experience with, and knowledge of, Yucca Mountain site data have contributed to the identification of the ten KTI's that currently form the basis for NRC's pre-licensing reviews and interactions, as documented in *Issue Resolution Status Reports* (IRSRs). The use of these techniques has also contributed to the development of the staff's independent performance assessment capability as well as to the development of a new (proposed) risk-informed, performance-based regulatory framework specific to the Yucca Mountain site.[35] Finally, the staff expects to achieve additional progress in issue resolution through the staff's forthcoming *Viability Assessment* review.

The staff will periodically re-evaluate the significance of the current suite of KTIs based on new information and experience. The staff plans to use performance assessment methods coupled with a KTI-based program to encourage DOE to develop the methods necessary to evaluate the significance of technical uncertainties and to reduce them, to the extent practicable, before it submits a potential license application to NRC.

2.1.4 Current HLW Performance Assessment Computer Code

In IPA Phase 1, the NRC staff developed its own system code to process information needed to generate the CCDF representative of the performance of the geologic repository, for a limited set of scenario classes, using preliminary data and numerous assumptions.[36] In IPA Phase 2, the staff developed more sophisticated models and improved computer codes, to represent the performance of a geologic repository. The staff's post-Phase 2 efforts have focused on improving its modeling approaches and corresponding computational modules. The technical basis for these improvements is was developed using the KTI approach, based on a review of the DOE program. This improved computer code is

designated the *TPA 3.1 computer code.*[37]

The main objectives of the TPA 3.1 computer code are to develop the computational algorithms for evaluating compliance with the performance objective to be set forth in the draft proposed NRC site-specific regulation. When fully developed, the TPA computer code will permit estimates of overall system performance, as a function of the specific characteristics of the proposed repository site, engineered components and possible future states. Such computations take into account the complex interactions among site and design subsystems, components, future states, and processes. Accordingly, the NRC staff expects to use the TPA computer code to review critical aspects of the performance assessment contained in a potential DOE license application, and as a basis for interactions related to the sufficiency of DOE's site characterization program and *Viability Assessment* during the pre-licensing period.

Figure 7 shows schematically the data flow and execution dependencies of the subprocess for the current TPA 3.1 computer code. In addition to adapting to new and more stringent quality assurance requirements in the development of the TPA 3.1 computer code, improvements over the Phase 2 code included:

- A new waste package failure and source term model;
- Improved technical bases for the probability and scenario characteristics for volcanic disruption of the repository;
- Improved capability to predict time-dependent temperature and relative humidity for use in the source term module related to thermal effects on flow;
- Estimates of ground-water chemical composition; and
- Introduction of a new performance measure – expected *individual* annual dose.

In NRC's TPA 3.1 code, the executive module controls the overall code execution, including reading the input data file, controlling the flow of data between various modules, sampling of input parameters, identifying and initiating consequence modules, and generating output data. Utility modules in the TPA 3.1 computer code perform various initializations, input and output processing, and intermediate calculations. For example, the SAMPLER utility module dynamically stores and retrieves information for model input parameters with assigned statistical distributions. SAMPLER supports either Monte Carlo sampling or LHS Hypercube Sampling. Consequence modules can be grouped into the following broad categories: (i) unsaturated flow above the repository; (ii) engineered barrier system and near-field; (iii) unsaturated flow and transport below the repository; (iv) saturated flow and transport; and (vi) dose calculation. Estimating all factors affecting repository performance is complicated by the coupled nature of many physical processes, heterogeneities, and extrapolations and interpolations based on limited data. Detailed simulation models which include all the couplings, heterogeneities, and complexities are difficult to incorporate into performance assessment models and still maintain reasonable computer execution times and hardware requirements. Therefore, identification and inclusion of the level of detail and coupling that is needed to produce a defendable analysis is a high priority. The TPA 3.1 computer code contains explicit consideration of some complexities (e.g., model for coupling of thermal and hydrologic processes) and implicit consideration of others (e.g., tabular data, abstracted from detailed

Figure 7. Flow diagram for elements of the TPA Version 3.0 computer code.

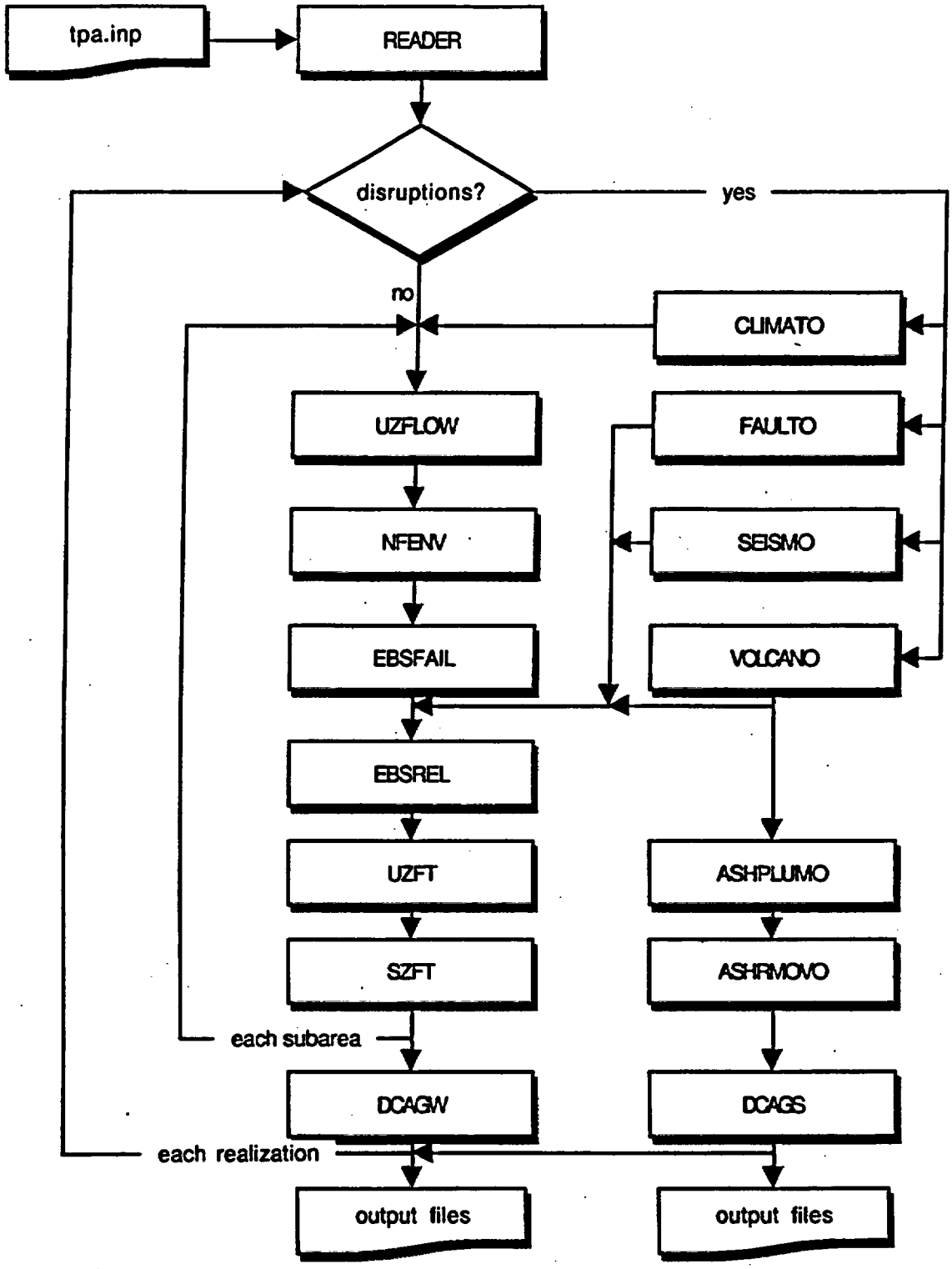
tpa.inp
READER
disruptions?
yes
no
CLIMATO
UZFLOW
FAULTO
NFENV
SEISMO
EBSFAIL
VOLCANO
EBSREL
UZFT
ASHPLUMO
SZFT
ASHRMOVO
each subarea
DCAGW
DCAGS
each realization
output files
output files

modeling, to characterize variation of geochemical properties with temperature).

One useful way to describe the capability of the TPA 3.1 computer code is to outline the different types of processes/conditions that are modeled in the code. Estimation of the near-field conditions at the repository drift involves consideration of hydrologic, thermal, and geochemical processes. Hydrologic conditions at the repository drift are estimated within the TPA 3.1 computer code considering the effects of long-term climate changes, spatial variation in deep percolation, and the reflux of water due to repository heat load. The waste package surface temperature and the maximum spent fuel temperature are calculated using a multi-mode heat transfer model for the drift (i.e., conduction, convection, and radiation). The pH and chloride concentration of the water contacting the waste packages are estimated from more detailed analyses. In addition, geochemical and thermal processes within the host rock are also considered.

Estimation of liquid release from the EBS requires evaluation of waste package degradation (e.g., when and how much water can enter the waste container and contact waste), mobilization of radionuclides from the spent fuel matrix, and transport out of the waste package.

The waste package is modeled in one of four ways: (i) waste package fabrication defects (initial failures); (ii) corrosion (dependent on the relative humidity, temperature, and chloride concentration of the water film on the waste package); (iii) mechanical failure; or (iv) induced by disruptive events (seismicity, fault displacement, and igneous activity). The executive module keeps track of waste package failure from different causes and sums, in time, the total number of failures in each modeled repository subarea. Determination of radionuclide releases out of the waste package is controlled principally by the alteration rate of the spent fuel, radionuclide solubility limits, and the rate of water entering the waste package.

Transport from the repository to the compliance point is simulated using a streamtube approach to mimic transport in porous and fractured media. Sorption in porous media is anticipated to significantly retard transport of most radionuclides. Matrix diffusion and sorption within fractures also have the potential to retard transport. Direct release of radionuclides must be considered in events involving igneous activity. This is done by modeling transport and deposition of contaminants released through an extrusive igneous event. These consequences are combined with an estimate of the probability of a volcanic event occurring during the lifetime of the facility.

An exposure scenario is determined by identifying the lifestyle and location of a potential critical group which is assumed to be exposed by contaminant transported through the ground-water pathway or released through extrusive igneous activity. Because the exposure scenario is an input option of the TPA 3.1 computer code, lifestyle and location of potential critical group are key assumptions to be determined by the user. In this regard, the user can select either a farming community (exposure through the ingestion of contaminated drinking water and food stuffs, inhalation, and surface exposure) or a residential community (exposure through the ingestion of contaminated drinking water, inhalation, and surface exposure) as the potential critical group to be modeled.

2.1.5 Regulatory Issues

In addition to the on-going evaluation of KTIs, the staff have identified a few generic, performance assessment-related issues that need to be addressed as it implements its site specific regulatory framework:

Elicitation and Use of Expert Judgments: The elicitation of expert judgments has become a frequent adjunct of performance assessments. Bonanò *et al.* (1990)[38] reviewed the areas and techniques that can be used to elicit expert judgments in: (i) selection of scenarios; (ii) development of conceptual models; (iii) model validation; (iv) quantification of parameter uncertainty; and (v) decisions on data collection. DOE has made abundant use of expert judgments to quantify parameter uncertainties in its site characterization programs. Indications are that DOE will continue to use expert judgment in its Yucca Mountain programs. Most recently, for example, DOE has used a series of formal expert elicitations to address the probability of volcanic activity, probabilistic seismic hazard analysis, and model abstractions related to hydrology, waste package performance, and other topics.

The NRC staff have begun to address the issues and techniques associated with the elicitation and use of formal expert judgment in HLW performance assessments. [39] NRC-sponsored studies include the review of: (i) performance assessment areas where the formal elicitation of expert judgments may be warranted; and (ii) the techniques that could be employed to obtain the judgments. Later, an elicitation procedure largely consistent with that where recommended was used to elicit judgments for estimating the probability of climate change in the Yucca Mountain vicinity. In addition to reviewing DOE's site characterization programs, the NRC staff has drawn upon experience obtained in other NRC regulatory programs. These efforts have allowed the NRC staff to gain a better understanding of the critical issues related to the use of expert judgment.

Collectively, these activities have provided a foundation for developing guidance on the acceptable use of expert judgment in the HLW program. The emphasis of such guidance, issued as NUREG-1563,[40] is on: (i) identifying areas to be addressed by the experts; (ii) structure of the elicitation process, including the selection of the experts; and (iii) documentation of the process. This guidance stresses the staff's position that, under appropriate circumstances, it is acceptable to supplement data and analyses with the opinions of experts as part of the support for demonstrating compliance with NRC's HLW disposal regulation, and that, in some cases, these opinions are best obtained using a formal and well-documented process. NUREG-1563 gives specific guidance by which DOE may determine if formal expert elicitation would be useful and provides guidelines for an acceptable process for obtaining it.

Scenario Analysis: In the staff's review of DOE's 1988 SCP, the NRC commented that DOE's site characterization program might not acquire all the data necessary for performance assessment activities used to support a license application.[41] This concern was related to inconsistencies in the DOE use of the term "scenario" and approaches used to decide on the inclusion or exclusion of scenarios in the demonstration of compliance with NRC's geologic repository performance objectives. DOE used a preliminary scenario analysis to define and screen a set of scenario classes on which its performance allocation tables (identification of the degree of credit or reliance of various components of the system) were based. This use was a concern in that the SCP performance allocation tables might not be adequate.

Scenario probabilities play a central role any TSPA, which treat disruptive events as well as a base case (or undisturbed repository performance). Methods for determining the probabilities of plausible future states of the repository environment (e.g. faulting, climate change, volcanism) are under continuing development, especially for the long period over which repository performance needs to be predicted. This problem is worse for human intrusion scenarios; recent efforts in assessing a probability for human intrusion have not met much success.

Uncertainty in forecasting the future state of the repository system is addressed by postulating a set of

scenarios; each scenario representing a possible realization of that future state. There are a number of issues associated with the use of scenarios as the vehicle to address this uncertainty. Some of these are: (i) definition of the term "scenario;" (ii) assurance of "completeness;" (iii) screening of processes, events and scenarios; (iv) consideration of future human actions; and (v) estimation of the probability of events, processes, and scenarios. Because of the significance of this issue, the NRC has undertaken a series of activities designed to provide the staff with the necessary insights to address it, including interactions with the OECD/NEA, in addition to technical exchanges and technical meetings with the DOE on the development of scenarios and their associated probabilities of occurrence.

Generating Distributions of Performance Measures: The results of the HLW performance assessment is probabilistic because the performance measure (e.g., cumulative release of radionuclides or dose) depends upon the scenario analyzed and the set of parameters used to generate the result. Some performance assessments (not NRC's) also consider alternative conceptual models by attaching a probability to each such conceptual model. Each scenario and realization of input parameters has associate with it a probability. Therefore, each realization of a performance measure has associated with it a probability of occurrence. The CCDF is a standard statistical method for displaying the results of probability analysis. Any revised standard for a HLW repository is likely to address the uncertainties inherent in repository performance by requiring a probabilistic portrayal of performance. Even if a particular statistic, based on these probabilistic results (e.g., the mean dose) is used for the purposes of compliance, there is an interest in seeing the entire distribution displayed, e.g., as a CCDF. A key concern of the staff is that DOE represents, in a distribution of the performance measure, the information needed to evaluate the safety of the repository in a meaningful and mathematically correct fashion.

Important aspects of the NRC's evaluation of distribution of the performance measures construction approaches will be ensuring that: (i) the approach selected allows the staff to discern the impact of the different sources of uncertainty on the distribution of the performance measures; (ii) the approach used to decide those uncertainties quantified and included in the construction of the distribution of the performance is systematic and defensible; (iii) the distribution of the performance measures is constructed in a manner that has meaning for protecting public health and safety; (iv) the manipulation of individual realizations of the performance measure(s) to generate a distribution correctly follows mathematical principles and the axioms of probability theory; and (v) any pre-processing by combining scenario classes or restricting the selection of important variable values are appropriately represented. An additional topic that may be explored is the partitioning of uncertainty in the performance of the repository into epistemic and aleatory components.

Model Validation: Validation is an important aspect of the regulatory uses of models in the performance assessments of geologic repositories. A substantial body of literature exists indicating the manner in which scientific validation of models is usually pursued. However, because models for a geologic repository performance assessment cannot be tested over the spatial scales of interest and long time periods for which the models must make predictions, the usual avenue for model validation – that is, comparison of model predictions with actual data at the space-time scales of interest – is precluded. Further complicating the model validation process in HLW programs are the uncertainties inherent in describing the geologic complexities of potential disposal sites, and their interactions with the engineered system, with a limited set of data, making it difficult to discriminate between model discrepancy and inadequacy of input data. A successful strategy for model validation, therefore, must attempt to recognize these difficulties, address their resolution, and document the resolution in a careful manner. This issue has been the subject of considerable discussion among international modeling experts. It is

important that some approach to validation in the context of the repository be produced as soon as possible, because the DOE is using models that will have to be validated in some manner by the time of a potential license application submittal.

As a consequence, the NRC staff and the staff of the Swedish Nuclear Power Inspectorate – Statens Kärnkraftinspektion (SKI) – have been working on a White Paper that presents a model validation strategy that can be implemented in a regulatory environment.[42] (This collaborative effort elaborates on the views of the authors, which were presented earlier in a shorter paper on this subject.[43]) This document presents the regulatory perspective of some NRC and SKI staff on model validation of HLW performance assessments. Current or potential repository developers or other regulators should recognize that this document does not have the status of formal guidance nor does it represent a staff position on this matter. (However, the two organizations may move jointly or individually to develop such formal guidance, at a later date, based on feedback on this White Paper.) Rather, based on a review of the literature and previous experience in this area, this White Paper presents the views of the authors from the two organizations regarding how, and to what degree, validation might accomplished in models used to estimate the performance of a HLW geologic repository, as well as issues that might be considered in any future guidance. The end result of validation efforts should be a documented enhancement of confidence in the model to an extent that the model's results can aid in regulatory decision-making. The level of validation needed should be determined by the influence of these models on system performance, rather than by the ideal of validation of a scientific theory.

Biosphere Transport: One key issue that the NRC will address, as EPA and the NRC develop a site-specific regulation for Yucca Mountain is the need to revise the performance assessment methodology to accommodate a dose or risk-based standard. The NRC has worked closely with the EPA to address this issue. Through its IPA efforts, the NRC continues to examine issues in implementing a standard that uses dose or risk as a performance measure.[44] In particular, is the postulation of assumptions and development of models for exposure to radionuclides from waste, adequate for prediction over long periods of time (e.g., 10,000 years).

To address these issues, NRC is participating in international activities, such as the International Atomic Energy Agency-initiated BIOMASS (Biosphere Modeling and Assessment) program[45], to take advantage of experiences in other radioactive waste disposal programs that are analyzing approaches to modeling biosphere transport for radionuclides over thousands to hundreds of thousands of years. The NRC will investigate the rationale used by other countries that currently rely on a dose assessment as the primary safety standard for radioactive waste disposal. Ultimately, the NRC staff evaluation of viable approaches to biosphere modeling will result in requirements incorporated into the site specific rule for Yucca Mountain and the subsidiary guidance for implementing it.

2.1.6 Future Activities

Because the TPA 3.1 computer code incorporates a number of characteristics of the proposed Yucca Mountain repository it provides the staff with an analysis tool capable of providing insights on important performance assessment issues and uncertainties related to geologic disposal of HLW. NRC is currently using the TPA 3.1 computer code in sensitivity studies at the process and system level to evaluate individual issues and subissues identified in NRC's KTI's. It is expected that these sensitivity studies and the ongoing interactions with DOE on their TSPA-VA will result in the identification of the need to modify the TPA 3.1 code. As currently planned, the staff intends to complete these modifications prior to receipt of DOE's TSPA-VA now expected at the end of 1998. This revised code, designated TPA

3.2.1[46], will be the basis for NRC's review of DOE's TSPA-VA. In parallel the NRC staff is developing an Issue Resolution Status Report for Performance Assessment and Integration(Revision 2) that contains acceptance criteria for various aspects of DOE's performance assessment.

2.2 Low-Level Waste Program

Before 1983, NRC regulated the disposal of LLW using a collection of generic regulations specified in 10 CFR Parts 30, 40, and 70. In response to the needs and requests of the public, the States, industry and others, the Commission promulgated specific requirements for licensing the near-surface land disposal of LLW. NRC's requirements are in the form of 10 CFR Part 61.[47] Part 61 establishes licensing procedures, performance objectives, and technical criteria for licensing facilities for the land disposal of LLW.

A primary consideration of a decision to authorize a license to operate an LLW disposal facility will be whether the site and design meet the performance objectives and technical requirements contained in Subparts C and D, respectively, of Part 61. A potential licensee must characterize the site and provide a demonstration that the disposal site and design will comply with the performance objectives. There will be unavoidable uncertainties in predicting the long-term performance of an LLW disposal facility. Conclusions as to the performance of the disposal facility and of particular barriers over long periods of time, by necessity, will be based largely on inference, as it will not be possible to carry out test programs of sufficient duration or that simulate the full range of potential conditions expected over the period of regulatory concern. Given these uncertainties, a potential licensee will employ design features, develop models, perform tests, and acquire data to demonstrate that the performance objectives will be met.

For its part, in reaching a potential LLW licensing decision, the Commission can be expected to apply the standard of "reasonable assurance," based on the record before it, that the Part 61 performance objectives and technical criteria will be met. Performance assessments are one mechanism for providing reasonable assurance, and, therefore, are expected to play an important role in any potential LLW licensing proceeding. For some states that have entered into an agreement with the NRC, (so-called *Agreement States*[48]) to perform certain regulatory functions for nuclear materials licensees, Part 61 provides the minimum requirements for the licensing of a LLW disposal facility by an Agreement State.

2.2.1 Background

Traditionally, all commercially generated LLW in the U.S. has been disposed of at the near-surface, using shallow land burial (SLB) methods. This disposal method relies on relatively simple engineering designs to isolate wastes from infiltrating water – the natural (geologic) characteristics of the site are the principal attenuators of any radioactivity that might be released to the accessible environment. SLB facilities for LLW at Barnwell, South Carolina, and Richland, Washington, are currently operational and are based on these somewhat simple designs. In conjunction with the development of Part 61 and after its publication in 1982,[49] the staff began to undertake a variety of performance assessment-related projects that primarily addressed SLB facilities. These projects were initiated in such areas as waste package performance and leaching, hydrogeological and hydrogeochemical characterization and modeling, and cover performance. The staff also began to investigate alternatives and engineered enhancements to SLB, and developed guidance for the licensing of new disposal facilities. [50]

To address the need for a more integrated approach to LLW performance assessment, the staff formulated an overall LLW performance assessment strategy in 1987.[51] This strategy recommended a modular approach for modeling LLW disposal facility system performance by quantifying potential release and

transport of radionuclides through significant environmental pathways. An LLW performance assessment methodology (PAM) based on this strategy was subsequently developed by the Sandia National Laboratories (SNL), at the request of the staff, and published in a five-volume series as NUREG/CR-5453.[52] In the early 1990s, the staff began developing an LLW performance assessment program plan.[53] This program had two primary goals: (i) to enhance the staff's capability to review and evaluate new LLW license applications; and (ii) to develop the in-house capability needed to prepare the necessary guidance. This plan was begun in response to needs identified by Agreement States and the staff through interactions with prospective applicants, the review of DOE prototype license applications, and in response to specific performance assessment issues raised by the States. It was also during this time that the staff formed the *Performance Assessment Working Group* (PAWG) to ensure the inter-office coordination of the respective LLW performance assessment efforts within the Agency.

From the early 1990s, the staff has continued to enhance its LLW performance assessment expertise and capability, consistent with its 1992 program plan. As part of this work, in 1992, PAWG initiated computer simulations of a test case problem of a hypothetical LLW disposal system including engineered barriers (e.g., concrete vault, cementitious backfill). The staff's efforts to enhance its performance assessment expertise and capability have also benefitted from related work in the area of HLW (see Section 2.1 of this paper). The staff has gained additional performance assessment experience and insight through workshops and meetings with interested States; other Federal agencies (DOE; the EPA; and the U.S. Geological Survey (USGS)); comparable regulatory entities in foreign countries (France, Spain, and Germany); and international organizations, such as the IAEA and the Nuclear Energy Agency (NEA). The culmination of this effort was the development of the *Draft Branch Technical Position on a Performance Assessment Methodology for Low-Level Radioactive Waste Disposal Facilities* (LLWBTP) – NUREG 1573 – which was released for public comment on May 29, 1997.

2.2.2 NRC's LLW Performance Assessment Methodology – PAM

As noted earlier, the staff's general performance assessment strategy recommended a modular approach to the modeling of LLW disposal facility system performance.[54] This approach, represented graphically in Figure 8, logically divides the disposal system into separate modeling areas:

- Infiltration and unsaturated (vadose) zone flow;
- Engineered barrier performance (coupled with infiltration analysis to calculate the water flux into disposal units);
- Radionuclide releases from waste forms and the bottoms of disposal units (container failure, leaching, and near-field transport);
- Transport media – ground water, surface water, and air;
- Plant and animal uptake (food chain); and
- Dose to humans.

Given the constraints imposed by site-specific conditions, the modular approach allows a mix of both complex and simple models to be used to capture the critical interactions among important processes

Figure 8. Conceptual model showing processes to be considered in draft NUREG-1573 LLW performance assessment methodology (PAM). Numbers next to the process blocks correspond to the technical positions described in the draft NUREG. Solid lines correspond to water flow pathways, and dashed lines correspond to radionuclide transport pathways.

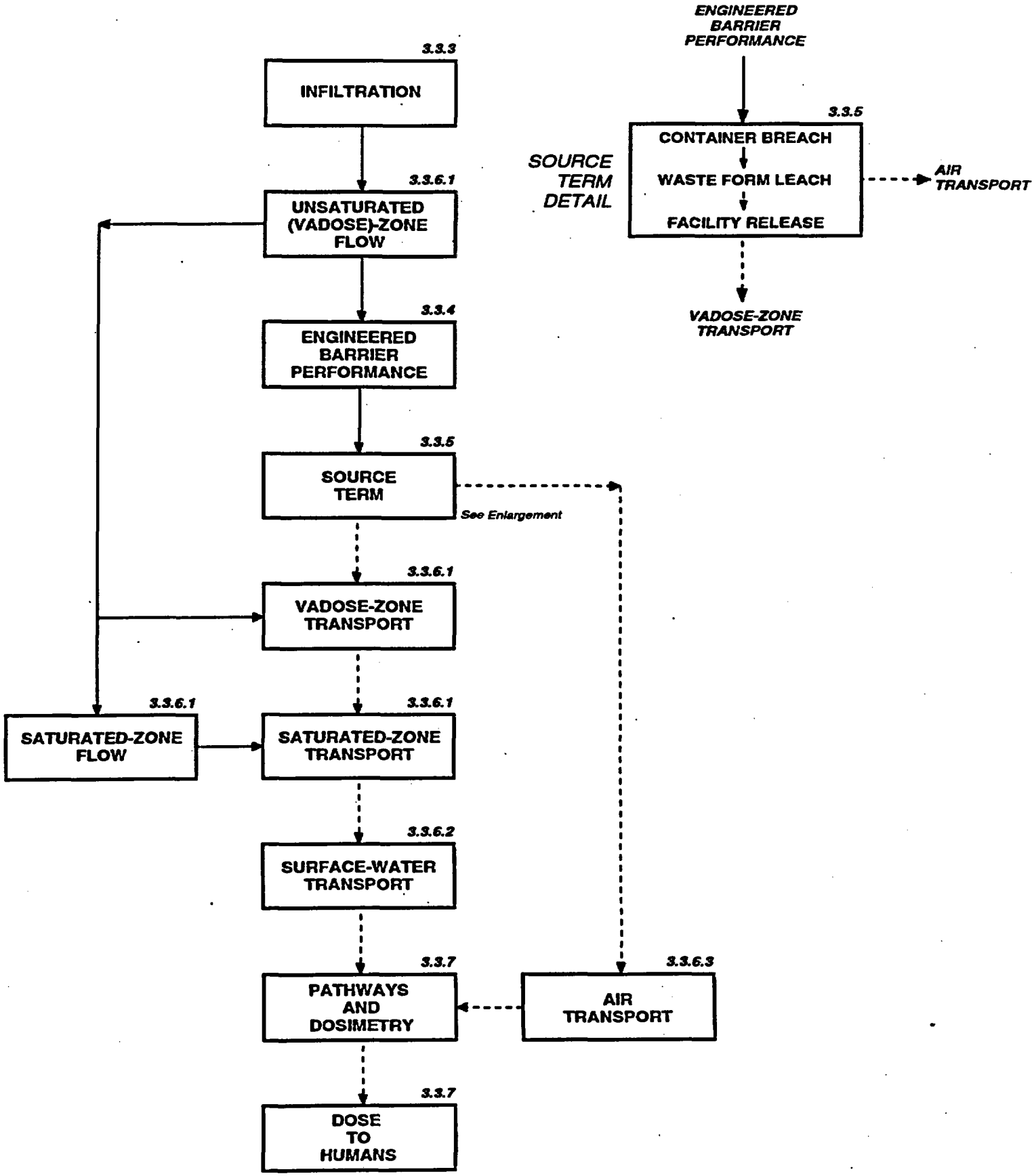
3.3.3
INFILTRATION
3.3.6.1
UNSATURATED (VADOSE)-ZONE FLOW
3.3.4
ENGINEERED BARRIER PERFORMANCE
3.3.5
SOURCE TERM
See Enlargement
3.3.6.1
VADOSE-ZONE TRANSPORT
3.3.6.1
SATURATED-ZONE FLOW
3.3.6.1
SATURATED-ZONE TRANSPORT
3.3.6.2
SURFACE-WATER TRANSPORT
3.3.7
PATHWAYS AND DOSIMETRY
3.3.7
DOSE TO HUMANS
3.3.6.3
AIR TRANSPORT
SOURCE TERM DETAIL
ENGINEERED BARRIER PERFORMANCE
3.3.5
CONTAINER BREACH
WASTE FORM LEACH
FACILITY RELEASE
AIR TRANSPORT
VADOSE-ZONE TRANSPORT

affecting disposal facility performance. Generally, complex models require more abundant and detailed input data than less sophisticated models, which rely more on simplifying assumptions and generalized information. The appropriate degree of modeling complexity within a module is determined by the purpose of the modeling, and the availability of suitable data and associated data uncertainty.

Over a 3-year period from 1988 through 1990, NRC, through its technical assistance contractor, SNL, developed the PAM. The PAM is a suite of models and codes suitable for analyzing the various disposal system modules set out in the staff's performance assessment strategy and was produced in five steps:

Step 1 – Identifying potential human exposure pathways.

Step 2 – Assessing the relative significance of exposure pathways.

Step 3 – Selecting and integrating system component models.

Step 4 – Identifying and recommending computer codes for representing the models.

Step 5 – Implementing and assessing the performance of recommended codes.

In the course of developing the PAM, a number of significant policy and technical issues were identified and described but not resolved,[55] and although the PAM addresses the mechanics of analyzing and modeling LLW disposal system performance, it does not constitute a way of systematically conducting, documenting, and preparing performance assessments acceptable for licensing.

Since 1990, the staff attempted to gain insights into the resolution of these LLW performance assessment issues. Most recent staff efforts include conducting a realistic test case performance assessment modeling study for a hypothetical site, interacting with Agreement States on site-specific performance assessment issues, conducting a performance assessment workshop for Agreement States, conducting NRC research and technical assistance contractor studies, and participating in international programs. These include: (i) an IAEA project on LLW site performance assessment;[56] (ii) various international symposiums on the verification and validation of geosphere performance assessment models (Statens Kärnkraftinspektion (SKI);[57] SKI/Organisation for Economic Co-operation and Development (OECD)/NEA;[58] and OECD NEA, 1995);[59] and (iii) the International Cooperative Project on Geosphere Model Validation (INTRAVAL) Project.[60] The technical position statements contained in NUREG-1573 reflect consideration of these other efforts.

2.2.3 Approach for LLW Performance Assessment

Fundamental to the LLW BTP was the development of guiding principals directing the performance assessment process and identification of the activities necessary for implementing this process. *The central attribute of the performance assessment process is that it is to be conducted iteratively – starting with a combination of generic and limited site-specific information in support of relatively simple conservative models and analyses, and progressing to more site-specific and detailed analyses, as necessary, to reduce uncertainty in assessing performance of a LLW disposal facility.* Initial screening analyses identify the most important issues and data needs, and as more site and design information is collected, modeling assumptions, conceptual models, and data needs are reevaluated. Site characterization and design bases are then revised to obtain data or modify the design as needed to reduce uncertainty and defend assessment results. The process is intended to be open and transparent in that all

data, assumptions, and models should be well-documented and explained. Moreover, the reasons for any subsequent modification of assumptions and models should also be documented and supported by an appropriate combination of site investigation and assessment data, valid technical reasoning, and professional judgment. The process incorporates a formal treatment of uncertainty to provide a basis for performance assessment decision-making, provides a technical basis for identifying the completion of site characterization, and helps build confidence that the disposal site meets the performance objective.

2.2.4 Steps of an Integrated LLW Performance Assessment

Nine steps identified for an integrated LLW performance assessment are depicted in Figure 9 and discussed in detail below. The process is designed to build confidence in model estimates of LLW disposal site performance by providing a useful decision-making framework for evaluating and defending the appropriateness of data, assumptions, models, and codes used in a performance assessment to demonstrate compliance with the post-closure performance objective of 10 CFR 61.41. This process systematically brings together, as a single endeavor, all aspects of site data, facility design, and waste characterization information needed for assessing disposal site performance.

Step No. 1 – Conduct Initial Data Evaluation of Information Needed to Describe the LLW Disposal System Environment

An LLW disposal facility is a complex system comprised of numerous natural and engineered features. The system complexity can be increased further by the many different waste species, containers, and forms that may be disposed of in it. Therefore, the first step should be to identify and consider the credible factors or key processes that could contribute to effecting a radionuclide release, including changes to the disposal site over time from natural processes and events. In other words, the notion behind this first process step is to develop a complete view of how the disposal system might actually perform, including consideration of possible alternative hypotheses. Although this description is primarily qualitative in nature, it should highlight deficiencies in the overall level of knowledge about the disposal site from which to begin the process of evaluating site-specific technical issues and data needs.

At this stage of the process, much of the information used to describe the disposal system will need to be generic. Subjective judgments about the performance of the disposal system – based on information drawn from the fundamental principles of chemistry, physics, geology, and the engineering sciences, and past experience or data from similar sites, precedent, and professional judgment – are also appropriate. However, reliable information on waste characteristics and amounts, as well as a detailed facility conceptual design, should be available.

Step No. 2 – Describe Initial Conceptual Models and Parameter Distributions

The detailed disposal system description, including all initially available data and information (Step No. 1), should next be used to develop site-specific conceptual models. Conceptual model development involves reducing the system description into a form that can be mathematically modeled. This generally means imposing a number of simplifying assumptions to approximate the behavior of the disposal site while accounting for all of the processes and features judged to be important to site safety. Although clearly not a trivial task, deciding on the necessary level of complexity should be dependent on the purpose of the analysis. For example, initial "screening" assessments may be very simple; however, more realism and complexity will likely be needed as the performance assessment process progresses. The analyst should be able to describe, in words, conceptual model assumptions and their technical bases, including how the models

Figure 9. Steps in an integrated LLW performance assessment, as described in draft NUREG-1573. The activities shown by the dotted lines depict the compliance review performed by the NRC staff.

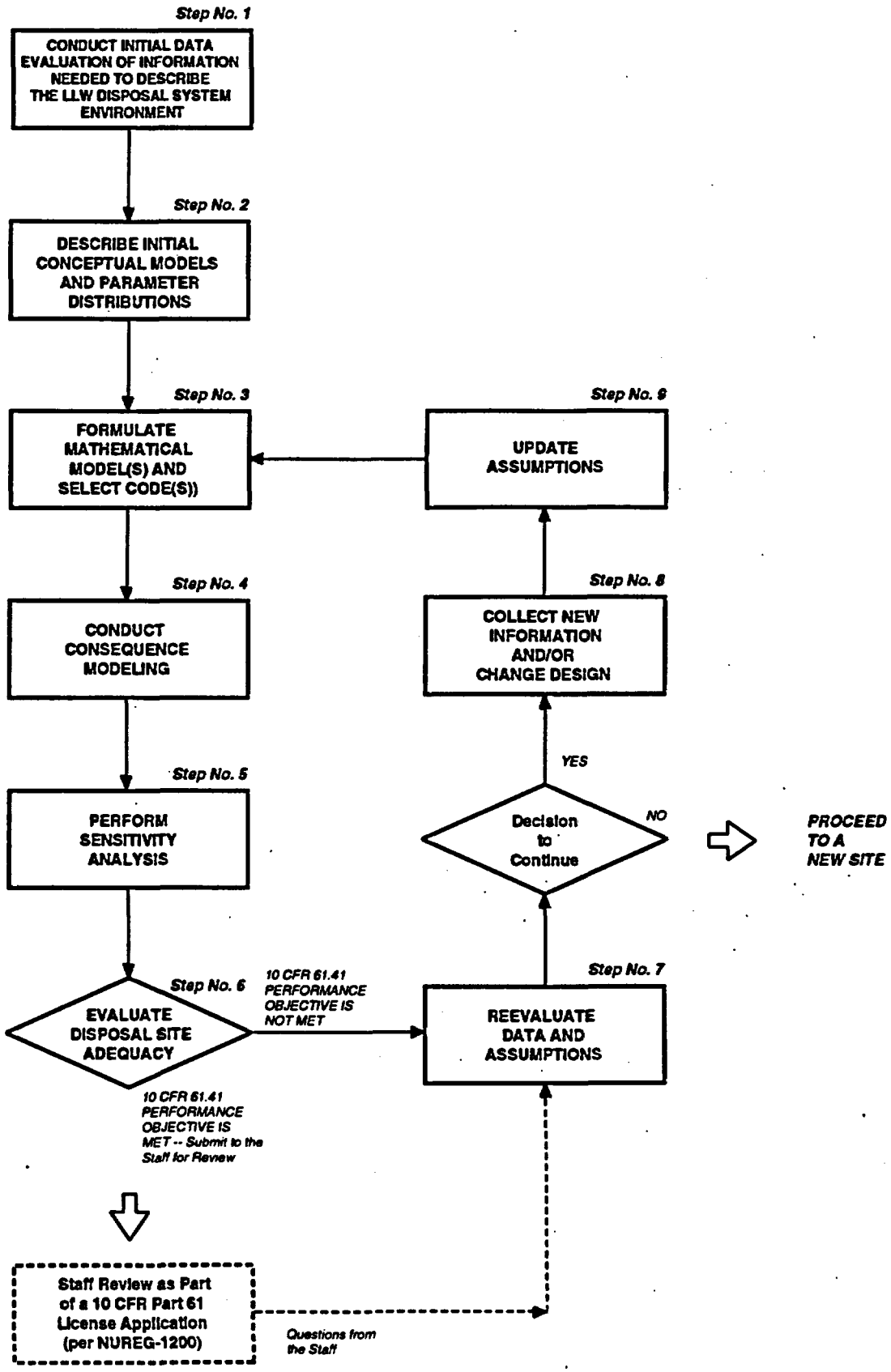
Step No. 1
CONDUCT INITIAL DATA EVALUATION OF INFORMATION NEEDED TO DESCRIBE THE LLW DISPOSAL SYSTEM ENVIRONMENT
Step No. 2
DESCRIBE INITIAL CONCEPTUAL MODELS AND PARAMETER DISTRIBUTIONS
Step No. 3
FORMULATE MATHEMATICAL MODEL(S) AND SELECT CODE(S))
Step No. 4
CONDUCT CONSEQUENCE MODELING
Step No. 5
PERFORM SENSITIVITY ANALYSIS
Step No. 6
EVALUATE DISPOSAL SITE ADEQUACY
10 CFR 61.41 PERFORMANCE OBJECTIVE IS NOT MET
10 CFR 61.41 PERFORMANCE OBJECTIVE IS MET -- Submit to the Staff for Review
Staff Review as Part of a 10 CFR Part 61 License Application (per NUREG-1200)
Questions from the Staff
Step No. 7
REEVALUATE DATA AND ASSUMPTIONS
Decision to Continue
NO
PROCEED TO A NEW SITE
YES
Step No. 8
COLLECT NEW INFORMATION AND/OR CHANGE DESIGN
Step No. 9
UPDATE ASSUMPTIONS

incorporate or account for important disposal site features and processes.

Step No. 3 – Formulate Mathematical Model(s) and Select Code(s)
At this stage in the performance assessment process, the analyst formulates mathematical representations of the conceptual models based on site-specific physical and chemical process considerations. The mathematical models may be solved numerically or in the form of analytical approximations. However, representations of conceptual models should not be constrained by the limitations of a particular computer code simply because a code is available or easy to use. This means that the analyst may have to develop a computer code for the express purpose of evaluating a particular conceptual model. However, it is not expected that this level of effort usually will be necessary, because a large number of computer codes exist that can be used to represent a broad range of potential conceptual models. As when developing conceptual models, the analyst should identify and describe, in words, assumptions embedded in mathematical models and codes.

Step No. 4 – Conduct Consequence Modeling
The purpose of consequence modeling is to calculate site performance for credible conceptual models. Because uncertainty is inherent in all performance assessment calculations, analysts need to consider how uncertainty associated with the models and parameters translates into uncertainty in consequence modeling. The amount of information and the level of analysis needed for treating uncertainty will vary from facility to facility because of significant differences among site characteristics, engineering designs, and radionuclide inventories.

Step No. 5 – Perform Sensitivity Analysis
Sensitivity analysis is performed on the consequence analysis results (Step No. 4) to evaluate which models, assumptions, and combinations of parameters were most significant in producing the resulting doses. Sensitivity analysis allows the analyst to carefully scrutinize what most affects analysis results to: (a) optimize characterization efforts by specifying information to be collected to reduce uncertainty the most; (b) better explain and defend the meaning of the performance assessment results; and (c) provide information that assists in the selection of an appropriate approach for the compliance demonstration.

Step No. 6 – Evaluate Disposal Facility Adequacy
Step No. 6 is a decision point to determine whether the LLW performance objective has been met. The evaluation to take place here should be a simple comparison between the consequence analyses (Step No. 4) and the 10 CFR 61.41 performance objective. If the comparison shows that the performance objective is met, it would be documented and submitted for review as part of a Part 61 license application.

If the comparison indicates that the performance objective is not met, the applicant should proceed to Step No. 7. However, because the goal of the LLW performance assessment analysis is to develop a supportable demonstration of compliance, the applicant need only to undertake a depth of analysis and conduct as many additional iterations as necessary (Step Nos. 7 through 9) to show that the performance objective has been met. In this regard, the need for additional iterations in the analysis will be tempered according to the complexities of the LLW disposal system being modeled, uncertainties surrounding system performance, and the estimated risk.

Step No. 7 – Reevaluate Data and Assumptions
From the sensitivity studies conducted in Step No. 5, to identify those data and assumptions having the greatest influence over the calculated results (Step No. 6), the analyst may be faced with a number of choices related to how best to reduce uncertainty further in additional performance assessment iterations. Uncertainty may be reduced in any or a combination of several ways including, obtaining new data from additional site investigations, performing adjunct modeling studies with new or existing data, and/or making changes to facility design. Thus, at this stage of the performance assessment process, the analyst should be concerned with how to optimize the allocation of resources for obtaining the information and data needed to reduce uncertainty and demonstrate compliance. Entering into this evaluation would be the relative uncertainties of assumptions and data, the degree that uncertainty was accounted for in the preceding analysis, and the cost of producing more or better data. This has been called "data worth analysis" in decision-making models.[61] If, however, the analyst determines that extensive additional data are needed to continue the process, owing to site complexity or other factors, it may be more cost-effective for the developer to reject the site altogether and proceed to another site.

Step No. 8 – Collect New Information and/or Change Design
Having completed the data worth analysis (in the preceding step), the site developer should choose a strategy that produces the most beneficial approach (including the costs/benefits of various options). As stated in Step No. 7, above, information developed can be of one type or a combination of several possible types, including site characterization data, changes to facility design, and adjunct modeling studies. Based on the sensitivity studies performed in Step No. 5, any of these sources of new information may significantly affect the subsequent consequence analysis iteration. A developer may, for example: (a) obtain new disposal site data with the goal of eliminating a conceptual model from consideration or narrowing a parameter range; (b) change the facility design to influence how barrier degradation is modeled, or confine problem radionuclides through the addition of special backfills; and/or (c) perform sophisticated modeling of geochemical conditions inside of disposal units, including cement buffering, to lower the source term release.

Step No. 9 – Update Assumptions
Assumptions and conceptual models are modified in this step, based on the new information and/or design changes obtained from performing Step No. 8, above. The principles to be applied in this step are the same as those for the initial data evaluation and conceptual model development (Steps 1 and 2, above). Subsequent model formulation may involve elimination of a conceptual model, modification of a conceptual model, or introduction of new models, as suggested by additional information. A smaller range of potential outcomes will result when models are updated to reduce uncertainty. Every successive iteration of the performance assessment should provide a rationale for the goals of the next iteration, such as the evaluation of new information (data) or improved conceptual models.

These nine steps provide a framework for conducting a transparent and defendable performance assessment for a LLW disposal site. Quantitative estimates of LLW site performance are matched to need: deterministic, bounding analyses for simple problems; and probabilistic analyses for more complex problems, with large uncertainties. Performance assessment ties disposal site performance to site characterization and facility design alternatives so that disposal system knowledge is obtained and

integrated in a systematic and efficient way. Performance assessment establishes a record to support the technical basis and written documentation of model assumptions and data needed for a successful compliance demonstration.

2.2.5 Regulatory Issues

Although a well-defined framework for conducting a LLW performance assessment has been developed, some very important regulatory issues in implementing this approach need to be addressed in more detail. These regulatory issues are:

Consideration of Future Site Conditions, Processes, and Events: Questions have been raised as to what extent future site conditions, processes, and events need to be considered in LLW performance assessments. Part 61 siting requirements emphasize site stability, waste isolation, long-term performance, and defensible modeling of future site behavior. To help achieve these goals, the requirements stipulate avoiding sites where the frequency and extent of geologic processes and events will adversely affect performance of an LLW disposal facility or preclude defensible modeling of long-term performance. Therefore, it should be possible to define a set of natural conditions, processes, and events that comprise the "reference geologic setting" to be used in an LLW performance assessment. It is important to emphasize that the goal of the analysis is not to accurately predict the future but to test the robustness of the facility against a reasonable range of possibilities. To capture the variability in natural processes and events and bound dynamic site behavior, the range of siting assumptions and data should be sufficient to understand the long-term trends in natural phenomena acting on the site. There should be a limit on the range of possible site conditions, processes, and events to be considered in a LLW performance assessment and unnecessary speculation in the assessment should be eliminated. Additionally, consideration of societal changes would result in unnecessary speculation and therefore should not be included in a performance assessment.

Performance of Engineered Barriers: Engineered barriers are components and systems designed to improve the waste retention capability of a LLW facility. Improved performance can often be due to a design function of the barrier (e.g., a concrete vault may be designed and constructed to have a very low permeability, thus limiting the water flux into the disposal unit) and/or the natural properties of the barrier (e.g., the physical presence of a backfill reduces void space thus improving the reliability of an earthen cover by reducing subsidence). Significant uncertainty exists concerning predicting the service (i.e., design) life and long-term degradation rates of engineered barriers. When the design function of an engineered barrier is relied on to enhance overall facility performance it may be necessary to identify time periods over which the barrier can be assumed to be functioning reliably to limit uncertainty and speculation in performance calculations due to degradation processes. For example, the design function of the EBS could be assumed to have degraded after a reasonable time period (i.e., 500 years) following site closure. Thus, the design function of a barrier would behave in an "as built" mode up to 500 years after which the design function would be assumed to behave at a level of performance considerably less than the optimum (e.g., permeability of concrete would be no better than the permeability of the surrounding soil after 500 years). However, loss or degradation of the design function over a particular time period does not necessarily imply a loss in the natural properties of the barrier over the same period. In the case of a cementitious engineered barrier the physical presence of a large volume of material (concrete vaults and cementitious backfill) can enhance performance by providing structural stability for an earthen cover and chemically buffering water inside the disposal unit which can reduce solubility limits and reduce mobilization of some radionuclides over very long time periods (i.e, 1000s of years) because the material is physically there in its constitutive properties for very long time periods. Credit

for engineered barriers should consider approaches like the above which can be used to limit the uncertainty in performance assessment calculations, which rely on engineered barriers, by tailoring the credit for engineered barriers to time periods and characteristics of the engineered barrier for which the reliability is high.

Timeframe for an LLW Performance Assessment: Part 61 does not specify a time of compliance for meeting the post-closure performance objective of 10 CFR 61.41. Specification of a period for analysis needs to consider a timeframe appropriate for evaluating the performance of both the EBS and geologic barriers with consideration given to the types (i.e., activity, half-life, and mobility) of radionuclides being disposed of as LLW. The key concern is that release and transport are sensitive to a number of uncertain site-specific parameters such as the degradation rates of engineered barriers, and estimates for geochemical retardation in soils. This sensitivity can result in order-of-magnitude uncertainties in the predicted time of peak dose at an off-site receptor point. The staff has proposed that to reduce unnecessary speculation regarding the performance assessment, a period of 10,000 years (i.e., the period of regulatory concern) is sufficiently long to capture the peak dose from the more mobile long-lived radionuclides and to demonstrate the relationship of site suitability to the performance objective. Shorter periods, such as the 1000 years being used in dose assessments for site decommissioning, are considered generally inadequate for assessments of LLW facilities. The staff is concerned that reliance on shorter compliance periods may result in an over-reliance on engineered barriers, to an extent that the performance of the natural setting would not be sufficiently evaluated, and would not consider peak dose, should it occur beyond the 1000-year period. Assessments beyond 10,000 years can be carried out, to ensure that the disposal of certain types of waste does not result in markedly high doses to future generations, or to evaluate waste disposal at arid sites with extremely long ground-water travel times. However, assessments of doses occurring after 10,000 years are not recommended for use as a basis for compliance with the performance objective.

Treatment of Sensitivity and Uncertainty in an LLW Performance Assessment: Uncertainty is inherent in all performance assessment calculations, whether they are deterministic or probabilistic, and regulatory decision-makers need to consider how the uncertainty associated with the models and parameters translates into uncertainty in performance measures. Formal sensitivity and uncertainty analyses should be conducted in support of performance assessment calculations. Two different approaches for representing system performance in the context of the post-closure performance objective were considered in the LLW BTP. One approach provides a single bounding estimate of system performance supported by data and assumptions that clearly demonstrate the conservative nature of the analysis. The other approach provides a quantitative evaluation of uncertainty with regard to system performance represented by a distribution of potential outcomes.[62]

When compliance, as measured against the 10 CFR 61.41 performance objective, is based on a single (deterministic) estimate of performance, the applicant is relying on the demonstration of the conservative nature of the analysis, rather than a quantitative analysis of uncertainty. Therefore, if it is to be used as a performance measure, a single estimate of performance should be at or below the 10 CFR 61.41 performance objective. In cases where a formal uncertainty analysis is performed and a distribution of potential outcomes for system performance is provided, therefore a method for determining compliance should be based on and appropriate for the information provided on system behavior. It is appropriate to require the mean of the distribution be less than the performance objective and the 95th percentile of the distribution be less than 1 millisievert – mSv (100 mrem), to consider a facility in compliance.

2.2.6 Future LLW Performance Assessment Activities

In closing, is should also be noted that a motivating factor influencing the development of the LLW BTP was the desire to share with the Agreement States and LLW disposal facility developers (as potential applicants) some of the staff's collective experience and insights, as they relate to the use of LLW performance assessments in a regulatory context. The extent to which the Agreement States or other regulatory entities implement the recommended technical position statements found in the NUREG are, of course, a matter for their consideration and decision.

Future staff efforts in the area of LLW performance assessment at this time are limited to finalization of the LLW BTP. In response to a request in the *Federal Register* for public comments on a draft,[63] the staff received comments from 17 organizations and individuals.[64] Depending on the prioritization and resourcing of LLW activities, the staff will analyze the comments received, and brief the ACNW on these comments and its proposed treatment of them, including any revisions to the guidance.

2.3 Decommissioning Formerly NRC-Licensed Sites

NRC has statutory responsibility for protecting health and safety and the environment related to the possession and use of source, byproduct, and special nuclear material under the Atomic Energy Act. Two general classes of NRC licensees are fuel cycle facilities (e.g., power and non-power nuclear reactors, fuel fabrication plants, fuel conversion plants, and spent fuel storage installations) and non-fuel-cycle facilities (e.g., universities, medical institutions, radioactive source manufacturers, and industrial facilities using radioisotopes). Once licensed activities have ceased at these facilities, NRC regulations require licensees to reduce residual radioactivity to a level that permits the safe removal of the facility from service (i.e., decommissioning).

On July 21, 1997, the NRC published in the *Federal Register* a final rule on radiological criteria for license termination.[65] This rule, which became effective on August 20, 1998, provides the regulatory basis for determining the extent to which lands and structures must be remediated before the NRC license is terminated. Under this rule, a site will be considered acceptable for release, for unrestricted use, if the residual radioactivity at the site would lead to a dose to the average member of the critical group of less than or equal to 25 (0.25 mSv) mrem/year. The licensee must also demonstrate that residual radioactivity has been reduced to levels that are as low reasonably achievable – ALARA. A site may also be considered acceptable for license termination, if the residual radioactivity at the site would lead to a dose to the average member of the critical group less than or equal to 25 mrem/year with land-use restrictions and either 100 (1 mSv) or 500 (5 mSv) mrem/year if those land-use restrictions fail. For restricted releases, the licensee will have to meet other requirements including demonstrating that further reductions in residual radioactivity necessary to comply with unrestricted release of the land are not practicable.

Prior to publishing the rule on July 21, 1997, the NRC did not have regulations that explicitly contained radiological criteria for terminating licenses. Instead the NRC used criteria and practices described in several NRC guidance documents that had been in use over the years. These guidance documents provided generic radioactivity release criteria for activities on building and equipment surfaces, concentrations in soils, exposure rates for direct exposure, and concentrations in ground water. Concentration limits for radioactivity in soils and ground water were established for only a small number of radionuclides. For licensees with contamination not covered by the guidance, site-specific release criteria had to be established based upon a dose assessment.

2.3.1 Background

Implementation Issues: Both in terms of type and level of radioactivity, there is a wide array of sites to be decommissioned. The spectrum of sites include: (i) sites with radioactivity limited to sealed sources; (ii) sites with building contamination; (iii) sites with widespread soil and/or sediment contamination; (iv) sites with radioactive waste and/or contaminated ground water; and (v) some combination of the aforementioned..

A large percentage of NRC licensees use sealed radioactive sources or have small amounts of short-lived radioactivity; therefore, decommissioning should be relatively easy for most licensees because these facilities usually have little or no residual radioactive contamination to be removed at the conclusion of operation. These facilities will typically involve the use of radioisotopes such as: Cobalt-60, Cesium-137, Iodine-123, Iodine-125, Iodine-131, Strontium-90, Americium-241, Technicium-99m. On the other hand, a small percentage of licensees are expected to have difficulty demonstrating that their facility can be decommissioned because of large quantities of long-lived radioactive material (primarily uranium and thorium). Unlike NRC regulations for LLW and HLW disposal where a proposed facility is being licensed before construction and operation, the decommissioning regulations cover activities at the conclusion of operations. Accordingly, there are fewer actions that a licensee can take to meet the dose criteria (e.g., siting and inventory reduction options are limited). For the small percentage of licensees with large volumes of long-lived radionuclides, the cost of removing the contamination may be prohibitive; thus, the licensee is primarily limited to taking actions to reduce the potential exposure to members of the public. Accordingly, the new regulations allow for decommissioning sites with land-use restrictions (previously, the NRC only allowed decommissioning a site for unrestricted use). A key issue for demonstrating compliance for licensees proposing land-use restrictions will be establishing effective long-term land-use restrictions.

Another important regulatory issue concerns whether radon should be included in the assessment. Radon is a radioactive gas formed from radioactive decay of radium, which is a progeny of naturally occurring Uranium-238 and Thorium-232. Therefore, radon could be of concern at sites with residual uranium and/or thorium. Concentrations of radon in the natural environment vary widely due to variation in geologic stratums.[66] Even within the same geologic environment, concentrations of radon within buildings may vary widely depending upon design features of the building and its type of ventilation. The wide variation in natural radon concentrations can make it difficult to distinguish between background radon and those resulting from licensed material. In addition, the wide array of building designs and features makes it difficult to account for radon in prospective dose assessments. Under the new regulations, a licensee can exclude radon in their dose assessment, but must analyze potential doses from exposure to radium (the principal precursor to radon).

The new regulations also address the key issue of the time frame over which the analysis should cover. The regulations set a 1000-year time frame for demonstrating compliance with the dose criteria. This time frame is considered appropriate given the relatively low radioactivity levels at most decommissioning sites.

Proposed Methodology: Prior to implementation of the new rule, performance assessments were done only on decommissioning sites with radioactivity not covered by criteria in existing guidance documents or where the licensee was seeking an exemption from the criteria. Accordingly, decommissioning under the old criteria was largely completed without the need for carrying out a performance assessment analysis. Dose assessments that were conducted were largely deterministic analyses assuming a

residential farmer future land-use scenario. Parameter values for these analyses usually consisted of a combination of prescribed and site-specific values.

Under the recently-promulgated regulations for license termination[67] and guidance being developed to support these regulations, the NRC staff envisions licensees using a performance assessment approach. In addition a hierarchical modeling approach is advocated, starting with simple screening analyses and progressing, as needed, to more sophisticated modeling with site-specific data.

For explanatory purposes, the NRC's proposed performance assessment approach may be visualized in three levels of modeling, moving from simple, prudently conservative screening analyses to more realistic site-specific analyses. The Level 1 or screening level analysis is intended to produce generic dose estimates. For a Level 1 analysis, site-specific source-term data is used with default models and parameters. The default parameters are selected so that the analysis provides prudently conservative estimates of the dose. Level 2 screening allows users to adjust certain parameters and eliminate pathways to more closely approximate conditions at their particular site. The Level 2 analysis uses the default models with site-specific source-term and parameter data. The Level 3 analysis uses site-specific models and data.

Using the NRC proposed approach, a licensee wishing to decommission their facility would first use a screening analysis with default parameters, exposure models, and scenarios to calculate potential doses from residual radioactivity at the site provided the site has no characteristics that would preclude the use of screening analyses. If a licensee shows compliance using the screening level analysis, then the licensee would need to demonstrate that the residual radioactivity is ALARA to demonstrate compliance and terminate the license. If the screening-level analysis exceeds the dose standards, the licensee would apply site-specific parameters in the screening-level models. If the calculations still exceed the dose criteria, the licensee would use site-specific parameters in site-specific models.

Example Implementation: The performance assessment approach proposed by the NRC for analyzing decommissioning sites, under the new rule, is still under development. An example of how the approach might be implemented is demonstrated through the following example.

A licensee for a 90 acres (36 hectares) former fuel cycle facility located in a semi-arid environment wishes to terminate its license and decommission the site. The site has contaminated soils and sludges. Surface radioactivity on building walls have been removed. The buildings will be demolished as part of the decommissioning work. The soils and sludges are contaminated with radioisotopes of Radium-226, Thorium-230, Uranium-235, and Uranium-238. The contaminated soils and sludges cover an area of 7.5 acres (3 hectares), at a depth of 30 feet (9 meters). Composite concentrations of the radioisotopes have been estimated to be:

Radioisotope	*Concentration (pCi/g)*
Radium-226	40
Thorium-230	1000
Uranium-235	7
Uranium-238	100

Previous studies on the site show that the shallow ground-water system at the site does not provide sufficient yields to be a suitable water supply for future land users. Water at the facility has been

provided by a nearby municipality.

The performance assessment begins with an initial assessment using the screening analysis. The future land-use is assumed to be a residential farmer; however, because of limitations on well yields from the shallow aquifer, the ground-water is excluded as an environmental transport pathway. Calculated doses using the screening analysis are 40 rem/year (0.4 Sv/year), primarily from ingestion of vegetables grown in the contaminated soils. This is well above the dose criteria for release of the site. Accordingly, the licensee would have to proceed with more site-specific, less conservative analyses.

Site-specific analysis shows that placement of a 10 foot (3 meter) cover over the contaminated soils and sludges drops the calculated doses to within a range of 0 to 2 rem/year (0.02 Sv/year), at 1000 years. The site-specific analysis includes a Monte Carlo analysis to account for variability in parameter values. Unlike for the screening analysis, which is designed to be prudently conservative, the site-specific analysis will be more realistic; therefore, it is important to quantify the uncertainty in the analysis. The range of variability in key parameters is represented by statistical distributions developed from site data. The distribution of output from the analysis show there to be a 25 percent probability of the doses exceeding the 100 mrem/year dose limits if land-use restrictions are used and should fail at some point. The distribution of doses is negatively skewed with a median dose of zero.

2.3.2 Current Issues

As previously stated, the NRC radiological criteria for decommissioning are implemented by requirements on dose. Accordingly, a performance assessment analysis is required to demonstrate compliance with the dose limits. The calculated dose represents a potential dose to someone using the site in the manner described in the scenario assumed for the analysis; therefore, this dose in all likelihood will not represent a real dose that someone will receive. There are large uncertainties in calculating these potential doses in the distant future (i.e., one thousand years) from today.

The NRC has developed the *DandD computer code* (hereafter referred to as *DandD*)[68] for conducting screening-level dose assessments to demonstrate compliance with the license termination rule. DandD may be used for two-levels of analyses, generic screening and limited site-specific analyses. Generic screening with DandD relies on the use of default parameter values, predefined models, and predefined scenarios. The result is expected to provide a prudently conservative estimate of the dose. Site-specific analyses with DandD involve the use of at least some site-specific parameter values with predefined models and scenarios.

Although, the current version of DandD is designed for performing a deterministic analysis, the default parameters were developed using a probabilistic approach designed to provide a specific confidence level in the resulting doses computed using default parameter values. One key issue is how to maintain this confidence level if any of the parameter values are changed without changing all of the parameters. NRC is considering developing a Monte Carlo version of DandD which will largely overcome this limitation.

Although the default parameter set in DandD was selected to achieve a certain confidence level in the resulting dose, no attempts have been made, at this time, at quantifying or measuring the degree of conservatism in the scenarios and models. The scenarios and models are thought to be conservative; however, if they are overly conservative, the code will not be useful as a screening tool because few if any sites would pass screening.

The staff have developed two land-use scenarios for consideration under the screening-level analysis: a building occupancy scenario for radioactive contamination on building surfaces and a residential farmer scenario for radioactively contaminated soils. The building occupancy scenario considers radioactive exposure through gamma radiation, inhalation of airborne material, and inadvertent ingestion of surface contamination. The residential farmer scenario considers more pathways: it considers exposure through gamma radiation, inhalation of resuspended material, ingestion of soil, ingestion of drinking water, and ingestion of plants, animals, and fish. It should be noted that, consistent with the regulation, a radon exposure pathway is not included in any of the scenarios. These scenarios are considered appropriate for bounding the estimated dose calculation. The staff is still developing guidance on alternative land-use scenarios.

Because DandD designed mainly for screening analysis, staff recognizes that DandD will not be suitable for all analyses. For example, for a licensee proposing to terminate their license through the imposition of land-use restrictions (e.g., deed restrictions on certain land uses), the assessment will require an analysis to evaluate doses off site or outside of the restricted area. DandD is designed only for assessing doses on site. Another commonly used code is the *RESRAD computer code*.[69] RESRAD was developed for DOE by Argonne National Laboratory to calculate site-specific residual radiation guidelines and radiation dose to future hypothetical on-site individuals at sites contaminated with residual radioactive material. The current version of RESRAD is only suitable for assessing doses on site. Although a Monte Carlo version of RESRAD is available, its use is not widespread. Most analyses involving the use of RESRAD are deterministic analyses. Because the default parameters in RESRAD were not developed to achieve a specific confidence level (such as the defaults in DandD), the quantitative degree of conservatism or confidence in the resulting dose is unknown. The same issue arises with the use other codes. Staff is still developing guidance on the acceptable use of other computer codes for demonstrating compliance with the license termination rule.

2.4 Advisory Committee on Nuclear Waste

The ACNW was established by the Commission in June 1988 to provide independent technical advice on agency activities and programs and to review key technical issues associated with the regulation, management, and safe disposal of radioactive waste. The scope of this advice includes regulations controlling the disposal of HLW (Part 60) and the disposal of LLW (Part 61), and other applicable regulations and legislative mandates such as the NWPA, the Low-Level Radioactive Waste Policy Act, as amended, and the Uranium Mill Tailings Radiation Control Act . The operations of ACNW, which are governed by provisions in the Federal Advisory Committee Act , are designed to encourage a broad spectrum of public, private, and governmental organizations and individuals to participate in its activities.

2.4.1 ACNW Activities and Risk Issues

Since its inception, ACNW has been concerned with the application of risk assessment concepts for nuclear waste management and disposal.[70] This has included reviews and critiques of standards and regulations for HLW and LLW, reviews of staff HLW and LLW performance assessment activities and capabilities, and reviews of specific programmatic areas that have a risk component to them, including HLW, LLW, and decommissioning programs. Some of the specific topics dealing with risk that the Committee has made recommendations and comments on have included: *deminimis* risk levels; individual and collective dose limits and risks; development of a risk-based standard for HLW; health risks of low levels of radiation; NRC's pre-licensing program and key technical issues (KTIs) for HLW[71]; technical bases for a Yucca Mountain standard; time span of compliance for HLW and LLW disposal facilities;

risk from igneous activity for a potential HLW repository at Yucca Mountain; and the reference biosphere and the critical group for Yucca Mountain. Some of the areas that ACNW has recently been concerned with include the application of risk-informed, performance-based regulation at the NRC, the evaluation of the EBS to help isolate waste at the proposed Yucca Mountain HLW repository, and the use of PRA tools to understand the individual contributions of engineered and natural systems to the overall performance of the repository within the context of NRC's defense-in-depth philosophy.

2.4.2 Risk-Informed, Performance-Based Regulation

The ACNW recently stated its support for the Commission's policy of increasing the use of risk-informed, performance-based approaches in waste management[72] and believes that this is an important step in the agency-wide movement toward risk-based regulation.[73] The ACNW believes that one of the most important advantages in using probabilistic approaches is to better communicate confidence in our understanding of the outcome of an event or process. Risk assessment provides a tool for analysts to express their full state of knowledge about how likely an event or process is. Within this concept the use of probabilistic analysis does not replace deterministic models, rather, it supplements this approach by allowing a more comprehensive understanding of results to be generated.

To accomplish the goal of increasing understanding and confidence in regulatory decision making, the Committee has recommended that performance assessments should, to the extent practicable, be developed using realistic models with uncertainties included.[74] The Committee maintains that the use of probabilities must be supported with appropriate information. When the supporting information is weak, the uncertainties will be larger. The results will provide a basis for experts, decision-makers, and the public to draw conclusions and make judgements about safety. The presentation of results as a range of outcomes with a probability distribution provides a logical framework to make decisions as conservative as desired (e.g., by selecting a specific percentile of the distribution for comparison to a performance objective), but within a framework that defines the level of conservatism.

2.4.3 Role of an Engineered Barrier System in the HLW Repository

Because of increasing importance of the EBS in the DOE's waste containment and isolation strategy for the Yucca Mountain project, the Committee has recommended that additional capabilities in engineering analysis, materials science, chemistry, and corrosion science be added to the HLW program to enhance staff capability to assess the containment capacity of the engineered systems.[75] One of the ACNW's current priority issues is to better understand the role of the EBS in the proposed repository, including how different components of the EBS contribute to performance.[76] This will include reviews of processes affecting waste package degradation and radionuclide release, such as corrosion of waste packages, oxidation of spent fuel, and incorporation of actinide elements and fission products into secondary uranium oxide phases. This may also include examining the use of coupled models to evaluate the chemical state of the near field environment and the effects on possible release and transport of radionuclides. The ACNW has continued to support funding for NRC KTIs relating to the near-field performance of the repository and transport of radionuclides.

2.4.4 Application of PRA Methods to the NRC Waste Management Program

As noted in Section 1 of this paper, a fundamental issue in waste system performance assessment is the presentation of results to decision makers and the public in a way that is understandable and allows one to discern the key elements of the analyses (i.e., their transparency and clarity). Because of the complexity of proposed disposal systems and the models intended to represent their performance, the main contributors to the expected system and subsystem performance are not always clear. In a recent letter on

the concept of defense in depth, the Committee recommended against specifying numerical subsystem requirements in developing a HLW regulation specific to Yucca Mountain,[77] a recommendation consistent with that of the NAS.[78] The Committee did recommend, however, that the relative contribution of individual barriers, including the engineered systems and the natural geological setting, to overall system performance need to be quantified.[79] The Committee has recommended that a methodology be developed, using an event tree or similar type of approach, that presents the performance assessment modeling results in a way that clearly indicates the rank ordered contributors to overall system performance (i.e., dose) and to evaluate the performance of different system components.[80] The approach would take the intermediate and final outputs of performance assessment models and decompose and process this information in a way that explicitly reveals the rank-ordered contributions of specific system and subsystem components to overall system performance, including the uncertainties. This issue concerns not only risk assessments of the proposed HLW repository at Yucca Mountain, but is applicable in part to other waste-related activities, such as decommissioning, LLW management, and management of uranium mill tailings.

Although there are significant differences between nuclear power plant PRAs and waste system performance assessments, a number of key similarities makes it possible to consider the use of PRA methods, such as the top-down event tree approach, to facilitate interpretation of performance assessment results. Both PRAs and performance assessments begin with a set of initial conditions (in PRAs these are called *initiating events*, whereas in waste system performance assessments these are called *scenarios*). In performance assessments, the initial conditions may consist of such phenomena as varying climate, volcanic and seismic events, or the effects of human intrusion due to exploratory drilling. Both PRA and performance assessments use a modular approach to the analysis (in PRAs, this includes *level-I, -II,* and *-III analyses*; in waste system performance assessments this is likely to include analyses for infiltration, engineered barriers, source term, geosphere transport, biosphere uptake, and dose to the receptor group(s)). Both methodologies can be decomposed into logical pinch points for which specific performance measures can be developed (such as core damage for PRAs and integrated release of radionuclides into the geosphere for performance assessments). Pinch points in performance assessments analysis occur where outputs from one module of the system model, such as material, energy, or information flow, become the inputs to another module. The ACNW has recommended that staff develop a systematic method of processing different inputs and outputs of the various modules that make up the full performance assessment model in terms of their individual contribution to the overall performance of the waste management system. To do this may require a different approach in the way that scenarios are structured for performance assessments.

In the context of the HLW program, the Committee has noted that an important benefit of such a post-processing tool would be helping to determine the importance of individual KTIs to the overall performance of the repository. This will allow staff to allocate already scarce resources to the KTI program so that the focus is on the most important KTIs and subsystem areas. Another important benefit that the Committee believes will accrue is that the approach will help to determine where uncertainties are important to demonstrating compliance and where they do not really matter, even if they are large. The goal in the near term is to optimize resource expenditures on reducing uncertainties. The goal in the longer term is to be able to defend in a potential licensing hearing the specific staff positions that would be documented in the *Safety Evaluation Report* vis-a-vis the magnitudes of the uncertainties for different subsystems and for total system performance. The Committee also believes that exposure of the public to a performance assessment process that is sufficiently transparent could enhance public confidence in the ability of the repository to isolate waste effectively.

3. SUMMARY

There are a number of recurrent themes in the NRC development and application of performance assessment. Some of these are generally applicable, while others are closely related to NRC's regulatory mission. The major themes include:

1. A systematic, structured approach is advocated for executing performance assessment.

2. An essential element of a systematic approach is that the analysis be conducted in an iterative manner to identify for successive analyses: (i) needs for additional laboratory and field data , (ii) improvements in modeling, and (iii) changes in design. In this way performance assessment becomes an integral part of site characterization, design activities, and regulatory compliance.

3. All the elements of the total system must be represented in the total system model in order to gain an accurate portrayal of total system performance. Although intermediate results and the output of subsystem models can provide essential insights into the operation of the total system, such results viewed without the benefit of a total system performance analysis can be very misleading.

4. A variety of analyses under the general heading of **sensitivity analysis** should be performed as part of the performance assessment. Parameter sensitivity studies determine the fractional variation in model output as a function of the fractional variation in model input; this helps to identify parameters that have a large influence on overall performance (or subsystem performance). Parameter sensitivity studies can use a variety of methods, including sensitivity over a region of parameter space, sensitivity at a single point, multivariate sensitivity, and sensitivity of parameters taken one at a time. If the variance of the model output is related to the variance of each input parameter, then the impact of parameter uncertainty on uncertainty in overall performance can be determined; this helps to identify those parameters for which a reduction in uncertainty will reduce overall output uncertainty. Investigations of the impact of reducing or neutralizing the effects of subsystems, components, or phenomena can provide insights regarding the importance of various aspects of the total system performance model.

5. An important recent trend in performance assessment has been the adoption of a strategy in which simplified models are used to represent total system performance, when a sizeable number of Monte Carlo realizations are required to characterize the uncertainty in total system performance. This strategy has been called abstraction; that is complex and more complete representations (models) of subsystems, components, and phenomena are replaced by simplified, computationally rapid models that preserve the essential behavior of the underlying models. Of course, it is essential, for such a strategy to be suitable, that a substantiated rationale be provided to demonstrate that the simplifications made in the transition from complex to simple representations are appropriate. This must be done in a clear and traceable fashion, so the linkage between system features, both natural and engineered, and total system performance is transparent. Another element needed to support the performance assessment is that the abstracted models and the more detailed models upon which they are based must be shown to be valid in their choice and application to the system modeled. The degree of support for each model should be in proportion to the importance of the model in demonstrating compliance.

6. An important aspect of performance assessment is the clear communication of the results and basis of the assessment. This requires a careful, transparent, and traceable documentation of all the elements of the analysis: (i) the qualitative (soft) and quantitative data upon which the analysis is based and its origin; (ii) the conceptual models of the various subsystems, components, and phenomena used in the analysis, including the alternatives considered, the reasons for choosing the preferred model, and all assumptions made in formulating the model; (iii) the mathematical models used to represent the conceptual models, including any approximations and assumptions; (iv) the computer codes used to implement the mathematical models, including solution algorithms; (v) the sensitivity analyses, of all types, performed; (vi) auxiliary analyses and ancillary studies that support or illuminate the performance assessment; (vii) a complete portrayal and interpretation of results, including an explanation of all significant system behavior.

7. In a regulatory context, performance assessment has several uses, which include: (i) providing insights for rulemaking or the development of various types of regulatory guidance; (ii) evaluating, qualitatively and quantitatively, the performance assessments submitted by licensees to demonstrate compliance with applicable regulations; and (iii) support for making programmatic decisions regarding the expenditure of resources, the sponsorship of research, and the development of guidance.

8. The NRC and other regulatory agencies have adopted a risk-informed approach to regulation in the past few years. Performance assessment is a clear manifestation of a probabilistic safety assessment method and supports the NRC's adoption of risk-informed approaches in the regulation of nuclear waste facilities.

References

1. The U.S. Department of Energy (DOE) is responsible for the management of radioactive waste related to nuclear weapons production and certain research activities. Various other federal agencies (U.S. Environmental Protection Agency, the Department of Transportation, and the Department of Health and Human Services) also have a role in the regulation of radioactive material.

2. U.S. Department of Energy, *et al.*, "Risk Assessment: A Survey of Characteristics, Applications, and Methods used by Federal Agencies for Engineered Systems (submitted to the Federal Coordinating Council for Science, Engineering, and Technology, Ad Hoc Working Group of Risk Assessment), Washington, D.C., U.S. Nuclear Regulatory Commission, November 1992. Includes contributions from eight Federal agencies, including the NRC.

3. The Commission's *[Final] PRA Policy Statement* can be found in a *Federal Register Notice*, dated August 16, 1995 (60 FR 42622).

4. See U.S. Nuclear Regulatory Commission, "Reactor Safety Study: An Assessment of Accident Risks in U.S. Commercial Nuclear Power Plants," WASH-1400 (NUREG-75/014), Main Report and 11 Appendices, October 1975.

5. *Ibid.*

6. See NRC PRA Working Group, "A Review of NRC Staff Uses of Probabilistic Risk Assessment," U.S. Nuclear Regulatory Commission, NUREG-1489, March 1994.

7. For the purposes of this discussion in this paper, a "disposal facility" is intended to refer to a either a geologic repository for the disposal of LLW and HLW or the in-place stabilization system intended to facilitate the decommissioning of an NRC-licensed nuclear materials facility.

8. For ease of discussion, two barrier classes are identified – engineered and natural – although there may be several individual barriers in each class.

9. OECD/Nuclear Energy Agency, "Can Long-Term Safety be Evaluated? – An International Collective Opinion," Paris, France, Radioactive Waste Management Committee of the OECD NEA, IAEA, and the CEC, Disposal of Radioactive Waste Series, 1991.

10. Campbell, J.E., and R.M. Cranwell, "Performance Assessment of Radioactive Waste Repositories," *Science*, 239[4846]:1389-1392 [1988].

11. As used in this paper, HLW includes spent nuclear fuel (SNF) and transuranic wastes, unless otherwise specifically stated.

12. National Research Council, "Technical Bases for Yucca Mountain Standards," Washington, D.C., National Academy Press, Commission on Geosciences, Environment, and Resources, July 1995.

13. U.S. Department of Energy, "Civilian Radioactive Waste Management Program Plan," Office of Civilian Radioactive Waste Management (Revision 1)," Office of Civilian Radioactive Waste Management, DOE/RW-0458, May 1996.

14. Johnson, R.L., "Overall Review Strategy for the Nuclear Regulatory Commission's High-Level Waste Repository Program," U.S. Nuclear Regulatory Commission, NUREG-1495, November 1994.

15. U.S. Department of Energy, "Site Characterization Plan, Yucca Mountain Site, Nevada Research and Development Area, Nevada," Office of Civilian Radioactive Waste Management, Nevada, DOE/RW-0199, 9 vols., December 1988.

16. U.S. Nuclear Regulatory Commission, "NRC Staff Site Characterization Analysis of the Department of Energy's Site Characterization Plan, Yucca Mountain, Nevada," Office of Nuclear Material Safety and Safeguards, NUREG-1347, August 1989.

17. Cranwell, R.M., *et al.*, "Risk Methodology for Geologic Disposal of Radioactive Waste: Final Report," U.S. Nuclear Regulatory Commission, NUREG/CR-2452, August 1987.

18. Bonano, E.J., *et al.*, "Demonstration of a Performance Assessment methodology for High-Level Radioactive Waste Disposal in Basalt Formations," U.S. Nuclear Regulatory Commission, NUREG/CR-4759, June 1989.

19. Gallegos, D.P. "A Performance Assessment Methodology for High-Level Radioactive Waste Disposal in Unsaturated, Fractured Tuff," U.S. Nuclear Regulatory Commission, NUREG/CR-5701, July 1991.

20. The DOE development of TSPAs for Yucca Mountain are also described in this edition of *Risk Analysis.*

21. U.S. Nuclear Regulatory Commission, "NRC Staff Site Characterization Analysis of the Department of Energy's Site Characterization Plan, Yucca Mountain, Nevada," Office of Nuclear Material Safety and Safeguards, NUREG-1347, August 1989.

22. Codell, R.B., *et al.*, "Initial Demonstration of the NRC's Capability to Conduct a Performance Assessment for a High-Level Waste Repository," U.S. Nuclear Regulatory Commission, NUREG-1327, May 1992.

23. In July 1987, the U.S. Court of Appeals for the First Circuit In Boston vacated Subpart B of the 40 CFR Part 191 and remanded the rule to EPA for further consideration. Since then, EPA was working to revise it environmental standards (see U.S. General Accounting Office, "EPA's Development of Radiation Protection Standards," Washington, D.C., GAO/RCED-93-126, June 3, 1993.) However, before EPA could complete its work, Congress enacted EnPA, which mandated a different approach.

24. Codell, R.B., *et al.*, "Initial Demonstration of the NRC's Capability to Conduct a Performance Assessment for a High-Level Waste Repository," U.S. Nuclear Regulatory Commission, NUREG-1327, May 1992.

25. Longsine, D.E., E.J. Bonano, and C.P. Harlan, "User's Manual for the NEFTRAN Computer Code," U.S. Nuclear Regulatory Commission, NUREG/CR-4766, September 1987.

26. Iman, R.L. and M.J. Shortencarier, "A FORTRAN 77 Program and User's Guide for the Generation of Latin Hypercube and Random Samples for Use in Computer Models," U.S. Nuclear Regulatory Commission, NUREG/CR-3624, March 1984.

27. Wescott, R.G., *et al.* (eds.), "NRC Iterative Performance Assessment Phase 2: Development of Capabilities for Review of a Performance Assessment for a High-Level Waste Repository," U.S. Nuclear Regulatory Commission, NUREG-1464, October 1995.

28. *Ibid.*

29. The regulations in 10 CFR 60.113 establish specific performance objectives for the following repository subsystems: (1) the EBS; and (2) the geologic setting. In its 1995 findings and recommendations (National Research Council, 1995; p. 126), the NAS indicated that the potential for such requirements might lead to suboptimization of repository design.

30. Mantueufel, R.D., and R.G. Baca, "Iterative Performance Assessment Phase 3: Status of Activities," San Antonio, Texas, Center for Nuclear Waste Regulatory Analyses, CNWRA 95-007, April 1995.

31. Kotra, J. P., *et al.*, "Strategy for Development of NRC Regulations for the Proposed Repository at Yucca Mountain, Nevada," in American Nuclear Society, *High-Level Radioactive Waste Management: Proceedings of the Eighth International Conference, May 11-14, 1998,* Las Vegas, Nevada, pp. 361-363 [1998].

32. McCartin, T.J., and M.P. Lee (eds.), "Preliminary Performance-Based Analyses Relevant to Dose-Based Performance Measures for A Proposed Geologic Repository at Yucca Mountain," U.S. Nuclear Regulatory Commission, NUREG-1538, in press.

33. NRC's KTIs include: (1) igneous activity; (2) structural deformation and seismicity; (3) evolution of the near-field environment; (4) container life and source term; (5) thermal effects on flow; (6) repository design and thermal-mechanical effects (7) total-system performance assessment and integration; (8) activities related to development of the EPA Yucca Mountain standard; (9) unsaturated and saturated flow under isothermal conditions; and (10) radionuclide transport.

34. Sagar, B. (ed.), "NRC High-Level Radioactive Waste Program Annual Progress Report: Fiscal Year 1996," U.S. Nuclear Regulatory Commission, NUREG/CR-6513, No. 1, January 1997.

35. Kotra, J. P., *et al.*, "Strategy for Development of NRC Regulations for the Proposed Repository at Yucca Mountain, Nevada," in American Nuclear Society, *High-Level Radioactive Waste Management: Proceedings of the Eighth International Conference, May 11-14, 1998*, Las Vegas, Nevada, pp. 361-363 [1998].

36. See Chapter 4 ("System Code"), in Codell, R.B., *et al.*, "Initial Demonstration of the NRC's Capability to Conduct a Performance Assessment for a High-Level Waste Repository," U.S. Nuclear Regulatory Commission, NUREG-1327, May 1992.

37. Manteufel, R.D., *et al.*, Total-System Performance Assessment (TPA) Version 3.0 [Computer] Code: Module Descriptions and User's Guide," San Antonio, Texas, Center for Nuclear Waste Regulatory Analyses, March 1997.

38. Bonano, E.J., *et al.*, "Elicitation and Use of Expert Judgment in Performance Assessment of High-Level Radioactive Waste Repositories," U.S. Nuclear Regulatory Commission, NUREG/CR-5411, May 1990.

39. Codell, R.B., *et al.*, "Initial Demonstration of the NRC's Capability to Conduct a Performance Assessment for a High-Level Waste Repository," U.S. Nuclear Regulatory Commission, NUREG-1327, May 1992; ; Tschoepe, E., III, and L.R. Abramson, " 'Substantially Complete Containment' Elicitation Report," San Antonio, Texas, Center for Nuclear Waste Regulatory Analyses, CNWRA 92-016, August 1992; DeWispelare, A.R., *et al.*, "Expert Elicitation of Future Climate in the Yucca Mountain Vicinity — Iterative Performance Assessment Phase 2.5," San Antonio, Texas, Center for Nuclear Waste Regulatory Analyses, CNWRA 93-016, August 1993; Wescott, R.G., *et al.* (eds.), "NRC Iterative Performance Assessment Phase 2: Development of Capabilities for Review of a Performance Assessment for a High-Level Waste Repository," U.S. Nuclear Regulatory Commission, NUREG-1464, October 1995.

40. Kotra, J.P., *et al.*, "Branch Technical Position on the Use of Expert Elicitation in the High-Level Waste Program," U.S. Nuclear Regulatory Commission, NUREG-1563, November 1996.

41. Principally SCA Comments 95 and 105.

42. Eisenberg, N.A., *et al.*, "Regulatory Perspectives on Model Validation in High-Level Radioactive Waste Management Programs: A Joint NRC/SKI White Paper," U.S. Nuclear Regulatory Commission, NUREG-1636, 1998 [in press].

43. Eisenberg, N.A., *et al.*, "Model Validation from a Regulatory Perspective: A Summary," in Swedish Nuclear Power Inspectorate/OECD Nuclear Energy Agency, *International Symposium on Validation through Model Testing with Experiments (GEOVAL '94)*, Paris, France, October 11-14, 1994, pp. 421-434 [1995].

44. McCartin, T.J., and M.P. Lee (eds.), "Preliminary Performance Assessment Analyses Relevant to Dose-Based Performance Measures for A Proposed Geologic Repository at Yucca Mountain," U.S. Nuclear Regulatory Commission, NUREG-1538, in press.

45. See International Atomic Energy Agency, "BIOMASS Newsletter," Vienna, Austria, Waste Safety Section/Division of Radiation and Waste Safety, No. 2, December 1996.

46. Mohanty, S., and T.J. McCartin (coordinators), "Sensitivity and Uncertainty Analyses for a Proposed HLW Repository at Yucca Mountain, Nevada, Using TPA Computer Code Version 3.1," U.S. Nuclear Regulatory Commission, NUREG-1668, 2 vols., 1998 [in press].

47. U.S. Nuclear Regulatory Commission, "Licensing Requirements for Land Disposal of Radioactive Waste [Final Rule]," *Federal Register*, Vol. 47, No. 248, December 27, 1982, pp. 57446-57248.

48. Under Section 274 of the Atomic Energy Act, NRC can relinquish portions of its LLW regulatory authority to the States. "Agreement States" are those States whose Governors have entered into limited agreements with the Commission to assume this authority and are permitted to license new disposal facilities under comparable regulations. In addition to potential Part 61 applicants, existing LLW licensees, operating under comparable Agreement State regulations, may also find the guidance in this NUREG useful as they proceed with the implementation of their respective programs

49. U.S. Nuclear Regulatory Commission, "Licensing Requirements for Land Disposal of Radioactive Waste [Final Rule]," *Federal Register*, Vol. 47, No. 248, December 27, 1982, pp. 57446-57248.

50. See U.S. Nuclear Regulatory Commission, "Standard Format and Content of a License Application for a Low-Level Radioactive Waste Disposal Facility (Rev. 2)," Washington, D.C., Office of Nuclear Material Safety and Safeguards/Division of Low-Level Waste Management and Decommissioning, NUREG-1199, January 1991 and U.S. Nuclear Regulatory Commission, "Standard Review Plan for the Review of a License Application for a Low-Level Radioactive Waste Disposal Facility (Rev. 2)," Washington, D.C., Office of Nuclear Material Safety and Safeguards/Division of Low-Level Waste Management and Decommissioning, NUREG-1200, January 1991.

51. Starmer, R.J., L.G. Deering, and M.F. Weber, "Performance Assessment Strategy for Low-Level Waste Disposal Sites," in *10th Annual U.S. Department of Energy Low-Level Waste Management Conference: Conference Proceedings, August 30-September 1, 1988*, Denver, Colorado, EG&G Idaho, December 1988, pp. 75-83.

52. See L.R. Shipers, "Background Information for the Development of a Low-Level Waste Performance Assessment Methodology — Identification of Potential Exposure Pathways," U.S. Nuclear Regulatory Commission, NUREG/CR-5453, Vol. 1, December 1989; Shipers, L.R., and C.P. Harlan, "Background Information for the Development of a Low-Level Waste Performance Assessment Methodology — Assessment of Relative Significance of Migration and Exposure Pathways," U.S. Nuclear Regulatory Commission, NUREG/CR-5453, Vol. 2, December 1989; Kozak, M.W., *et al.*, "Background Information for the Development of a Low-Level Waste Performance Assessment Methodology — Selection and Integration of Models," U.S. Nuclear Regulatory Commission, NUREG/CR-5453, Vol. 3, December 1989; and Kozak, M.W., *et al.*, "Background Information for the Development of a Low-Level Waste Performance Assessment Methodology — Identification and Recommendation of Computer Codes," U.S. Nuclear Regulatory Commission, NUREG/CR-5453, Vol. 4, December 1989; and Kozak, M.W., *et al.*, "Background Information for the Development of a Low-Level Waste Performance Assessment Methodology — Computer Code Implementation and Assessment," U.S. Nuclear Regulatory Commission, NUREG/CR-5453, Vol. 5, August 1990a.; and Kozak, M.W., M.S.Y. Chu, and P.A. Mattingly, "A Performance Assessment Methodology for Low-Level Waste Facilities," U.S. Nuclear Regulatory Commission, NUREG/CR-5532, July 1990b.

53. U.S. Nuclear Regulatory Commission, "Low-Level Radioactive Waste Performance Assessment Development Program Plan," Washington, D.C., SECY-92-060, February 21, 1992.

54. Starmer, R.J., L.G. Deering, and M.F. Weber, "Performance Assessment Strategy for Low-Level Waste Disposal Sites," in *10th Annual U.S. Department of Energy Low-Level Waste Management Conference: Conference Proceedings, August 30-September 1, 1988*, Denver, Colorado, EG&G Idaho, December 1988, pp. 75-83.

55. Kozak, M.W., *et al.*, "Evaluation of a Performance Assessment Methodology for Low-Level Radioactive Waste Disposal Facilities - Evaluation of Modeling Approaches," U.S. Nuclear Regulatory Commission, NUREG/CR-5927, Vol. 1, August 1993.

56. International Atomic Energy Agency, "Safety Assessment of Near-Surface Radioactive Waste Disposal Facilities: Intercomparison Exercise Using Hydrogeological Data of a Real Site (Test Case 2) - Second Report of NSARS," IAEA-

TECHDOC-[unspecified], December 1996. Part of the Co-ordinated Research Programme on the Safety Assessment of Near Surface Radioactive Waste Disposal Facilities (NSARS).

57. Statens Kärnkraftinspektion [Swedish Nuclear Power Inspectorate], *GEOVAL-1987: Proceedings of a Symposium on Verification and of Geosphere Performance Assessment Models, April 7-9, 1987,* Stockholm, Sweden, 3 vols., 1988.

58. Swedish Nuclear Power Inspectorate/OECD/Nuclear Energy Agency, *International Symposium on Validation of Geosphere Flow and Transport Models (GEOVAL '90)*, Stockholm, Sweden, May 14-17, 1990, Organization for Economic Cooperation and Development [1991].

59. Organization for Economic Co-operation and Development Nuclear Energy Agency/SKI, *GEOVAL-94: Validation through Model Testing — Proceedings of an NEA/SKI Symposium, October 11-14, 1994*, Paris, France, Organization for Economic Co-operation and Development, 1995.

60. Statens Kärnkraftinspektion, "INTRAVAL Project Progress Report No. 10 — December 1992 - August 1993," Stockholm, Sweden, 1993.

61. Freeze, R.A., *et al.*, "Hydrological Decision Analysis: 1, A Framework," *Ground Water*, 28:738-766 [1990]; Bear, J., M.S. Beljin, and R.R. Ross, "Ground-Water Issue: Fundamentals of Ground-Water Modeling," U.S. Environmental Protection Agency, EPA/540/S-92/005, April 1992; and Kozak, M.W., *et al.*, "Evaluation of a Performance Assessment Methodology for Low-Level Radioactive Waste Disposal Facilities — Evaluation of Modeling Approaches," U.S. Nuclear Regulatory Commission, NUREG/CR-5927, Vol. 1, August 1993.

62. Probabilistic approaches encompass a wide range of analysis techniques and methods. For the purposes of NUREG-1573, probabilistic approach refers to the use of a formal, systematic uncertainty analysis to quantify the uncertainty in performance estimates caused by uncertainty in models and parameters. Assigning probabilities to scenarios, which is characteristic of some probabilistic approaches, is not recommended by the staff for LLW performance assessments.

63. Dated May 29, 1997 (62 FR 29164-29165).

64. Written comments on Draft NUREG-1573 were received from: Chem-Nuclear Systems, Inc; the Commonwealth of Massachusetts; the Commonwealth of Pennsylvania; Enviocare of Utah; Golder Associates, Inc.; the Medical University of South Carolina; the Nuclear Energy Institute; Oak Ridge National Laboratory; Mel Silberberg (private citizen); the South Carolina Department of Health and Environmental Control; the State of Illinois; the State of Nebraska; the State of New Jersey; the State of Texas; DOE; U.S. Ecology, Inc.; and EPA.

65. U.S. Nuclear Regulatory Commission, "Radiological Criteria for License Termination [Final Rule]," *Code of Federal Regulations*, vol. 62, no. 139, pp. 39058-39092.

66. Gates, A.E., and L.C.S. Gundersen (eds.), "Geologic Controls on Radon," *Geological Society of America Special Paper 271*, 1992.

67. U.S. Nuclear Regulatory Commission, "Radiological Criteria for License Termination [Final Rule]," *Code of Federal Regulations*, vol. 62, no. 139, pp. 39058-39092.

68. Available on NRC's technical conference web page: *Http://technconf.llnl.gov/radcri/*

69. Yu, C., *et al.*, "Manual for Implementing Residual Radioactive Material Guidelines Using RESRAD, Version 5.0: Working Draft for Comment," Argonne, Illinois, Environmental Assessment Division/Argonne National Laboratory, ANL/EAD/LD-2, September 1993.

70. Advisory Committee on Nuclear Waste, "A Compilation of the Reports of the Advisory Committee on Nuclear Waste: 1990 - 1997," U.S. Nuclear Regulatory Commission, Vols. 1-7, NUREG-1423, August 1990 – August 1997.

71. Sagar, B. (ed)., "NRC High-Level Radioactive Waste Program Annual Progress Report: Fiscal Year 1996," U.S. Nuclear Regulatory Commission, NUREG/CR-6513, vol.1, January 1997.

72. U.S. Nuclear Regulatory Commission, "Use of Probabilistic Risk Assessment Methods in Nuclear Regulatory Activities [Final Policy Statement]," *Federal Register*, Vol. 60, No. 158, August 16, 1995, pp. 42622 — 42630.

73. The Application of Probabilistic Risk Assessment Methods to Performance Assessment in the NRC High-Level Waste Program, letter from ACNW Chairman B. John Garrick to NRC Chairman Shirley Ann Jackson, October 30, 1997, 4 pp.

74. The Application of Probabilistic Risk Assessment Methods to Performance Assessment in the NRC High-Level Waste Program, letter from ACNW Chairman B. John Garrick to NRC Chairman Shirley Ann Jackson, October 30, 1997, 4 pp.

75. Comments on Performance Assessment Capability in the NRC High-Level Radioactive Waste Program, letter from ACNW Chairman B. John Garrick to NRC Chairman Shirley Ann Jackson, October 8, 1997, 4 pp.

76. 1998 Strategic Plan and Priority Issues for the Advisory Committee on Nuclear Waste, letter from ACNW Chairman B. John Garrick to NRC Chairman Shirley Ann Jackson, December 23, 1997, 10 pp.

77. Recommendations Regarding the Implementation of the Defense-in-Depth Concept in the Revised 10 CFR Part 60, letter from ACNW Chairman B. John Garrick to NRC Chairman Shirley Ann Jackson, October 31, 1997, 4 pp.

78. National Research Council, "Technical Bases for Yucca Mountain Standards," Washington, D.C., National Academy Press, Commission on Geosciences, Environment, and Resources, July 1995.

79. Recommendations Regarding the Implementation of the Defense-in-Depth Concept in the Revised 10 CFR Part 60, letter from ACNW Chairman B. John Garrick to NRC Chairman Shirley Ann Jackson, October 31, 1997, 4 pp.

80. The Application of Probabilistic Risk Assessment Methods to Performance Assessment in the NRC High-Level Waste Program, letter from ACNW Chairman B. John Garrick to NRC Chairman Shirley Ann Jackson, October 30, 1997, 4 pp.