R08 030609 609

Tennessee Valley Authority, Post Office Box 2000, Decatur, Alabama 35609-2000

June 9, 2003

U.S. Nuclear Regulatory Commission
ATTN: Document Control Desk
Mail Stop: OWFN P1-35
Washington, D.C. 20555-0001

Gentlemen:

In the Matter of	)	Docket No. 50-260
Tennessee Valley Authority	)	

BROWNS FERRY NUCLEAR PLANT (BFN) - UNIT 2 - AMERICAN SOCIETY OF MECHANICAL ENGINEERS (ASME) SECTION XI, INSERVICE INSPECTION, CONTAINMENT INSPECTION (IWE), AND REPAIR AND REPLACEMENTS PROGRAMS - SUMMARY REPORTS (NIS-1 AND NIS-2) FOR CYCLE 12 OPERATION

In accordance with paragraphs IWA-6220 and IWA-6230 of the American Society of Mechanical Engineers (ASME) Boiler and Pressure Vessel Code, Section XI, 1995 Edition, 1996 addenda, TVA is submitting the BFN Unit 2 outage summary reports for NRC review. The summary reports are for inservice and containment inspection (NIS-1 Report), and repair and replacement activities (NIS-2 Report) for Unit 2 Cycle 12 operation.

TVA has determined that certain BFN Unit 2 welds had nondestructive examination (NDE) coverage limitations (less than 90 percent coverage completed) which exceed that specified in ASME Code Case N-460, "Alternative Examination Coverage for Class 1 and Class 2 Welds, Section XI, Division 1." Two austenitic stainless steel full penetration piping welds, one each for the Reactor Recirculation and Reactor Water Cleanup Systems, had calculated NDE examination coverage of 50 and 75 percent respectively. The limitations encountered during the performance of the ultrasonic (UT) examination were caused

A047

Printed on recycled paper

by component configuration. In addition, the welds are Category R-A (Westinghouse Owners Group (WOG) WCAP-14572, Revision 1-NP-A) Class 1 piping welds. These welds received greater than 90 percent examination coverage per the requirements of ASME Section XI. However, 10 CFR 50.55a(b)(2)(xv)(A)(2) restricts taking credit for "one-sided" examinations without completing a single-sided ASME Section XI, Appendix VIII demonstration using flaws on the opposite side of the weld. At the time of the examinations, no Performance Demonstration Initiative Program existed for single-side austenitic welds. Consequently, the percent examination coverage achieved for the two welds was 50 and 75 percent respectively.

Additionally, TVA has determined that Reactor Pressure Vessel (RPV) 12 welds had nondestructive examination (NDE) coverage limitations (less than 90 percent coverage completed) which exceed that specified in ASME Code Case N-460, "Alternative Examination Coverage for Class 1 and Class 2 Welds, Section XI, Division 1." The components are RPV nozzles (ASME Section XI, Code Category B-D, Nozzle-To-Vessel Welds) which had calculated NDE examination coverage ranging between 45 and 89 percent completed. The limitations encountered during the performance of the ultrasonic (UT) examination were caused by component configuration. The nozzle contours limit the accessible UT examination volume.

To address the above described weld examination limitations, TVA has submitted requests for relief 2-ISI-18 and 2-ISI-19 by letter dated June 2, 2003.

Enclosure 1 of this letter contains the BFN Unit 2 Inservice and Containment Inspection Summary Report (NIS-1) for Code Class 1 and 2 pressure retaining components and their supports. Enclosure 2 contains the Repair and Replacements Summary Report (NIS-2) for Code Class 1 and 2 components and supports.

There are no new regulatory commitments in this letter. If you have any questions regarding these reports, please contact me at (256) 729-2636.

Sincerely,

T. E. Abney
Manager of Licensing
and Industry Affairs

Enclosures
cc (Enclosures):
(Via NRC Electronic Distribution)

Mr. Stephen J. Cahill, Branch Chief
U.S. Nuclear Regulatory Commission
Region II
Sam Nunn Atlanta Federal Center
61 Forsyth Street, S.W., Suite 23T85
Atlanta, Georgia 30303-8931

NRC Resident Inspector
Browns Ferry Nuclear Plant
10833 Shaw Road
Athens, Alabama 35611-6970

Mr. Kahtan Jabbour, Senior Project Manager
U.S. Nuclear Regulatory Commission
One White Flint, North
(MS 08G9)
11555 Rockville Pike
Rockville, Maryland 20852-2739

DTL:JWD:BAB
Enclosures
cc (w/o Enclosures):
A. S. Bhatnagar, PAB 1E-BFN (w/Enclosures)
M. J. Burzynski, BR 4X-C
A. L. Ladd, PMB 2C-BFN (w/Enclosures)
J. E. Maddox, LP 6A-C
D. C. Olcsvary, LP 6A-C
C. M. Root, PAB 1G-BFN
J. R. Rupert, NAB 1A-BFN
K. W. Singer, LP 6A-C
M. D. Skaggs, POB 2C-BFN
E. J. Vigluicci, ET 11A-K (w/Enclosures)
R. E. Wiggall, SAB 1A-BFN (w/Enclosures)
EDMS-K (w/Enclosures)

S:\lic\submit\subs\u2c12nis.doc

ENCLOSURE 1

TENNESSEE VALLEY AUTHORITY
BROWNS FERRY NUCLEAR PLANT (BFN)
UNIT 2
AMERICAN SOCIETY OF MECHANICAL ENGINEERS (ASME),
SECTION XI, THIRD TEN-YEAR INSPECTION INTERVAL

INSERVICE INSPECTION (ISI), CONTAINMENT INSPECTION, AND
AUGMENTED EXAMINATIONS PROGRAMS

SUMMARY REPORT (NIS-1) FOR UNIT 2 CYCLE 12 OPERATION

(SEE ATTACHED)

BROWNS FERRY

NUCLEAR PLANT

UNIT 2 CYCLE 12

ASME SECTION XI

NIS-1

OWNER'S SUMMARY REPORT

OWNER: TENNESSEE VALLEY AUTHORITY OFFICE OF NUCLEAR POWER 1101 MARKET STREET CHATTANOOGA, TENNESSEE 37402	PLANT: BROWNS FERRY NUCLEAR PLANT P.O. BOX 2000 DECATUR, ALABAMA 35609-2000
UNIT: TWO	CERTIFICATE OF AUTHORIZATION: NOT REQUIRED.
COMMERCIAL SERVICE DATE: MARCH 1, 1975	
NATIONAL BOARD NUMBER FOR UNIT: NOT REQUIRED.	

UNIT 2 CYCLE 12

NIS-1

"OWNER'S REPORT FOR INSERVICE INSPECTION"

TABLE OF CONTENTS

OWNER: TENNESSEE VALLEY AUTHORITY OFFICE OF NUCLEAR POWER 1101 MARKET STREET CHATTANOOGA, TENNESSEE 37402	PLANT: BROWNS FERRY NUCLEAR PLANT P.O. BOX 2000 DECATUR, ALABAMA 35609-2000
UNIT: TWO	CERTIFICATE OF AUTHORIZATION: NOT REQUIRED.
COMMERCIAL SERVICE DATE: MARCH 1, 1975	
NATIONAL BOARD NUMBER FOR UNIT: NOT REQUIRED.	

APPENDIX I FORM NIS-1 OWNER'S REPORT

APPENDIX II SCOPE AND INTRODUCTION

SCOPE
INTRODUCTION

APPENDIX III ISI ABSTRACT

EXAMINATION SUMMARY
ASME CODE CASES
UNIT 2 INTERVAL STATUS
PERSONNEL AND EQUIPMENT CERTIFICATIONS

APPENDIX IV EXAMINATION LIMITATIONS

METHOD OF CALCULATION OF LIMITATIONS
EXAMINATION LIMITATIONS

APPENDIX V EXAMINATION PLAN

KEY TO WELD TRACKING SYSTEM
EXAMINATION PLAN OF CLASS 1 AND 2 COMPONENTS
COMPONENT ISOMETRICS

APPENDIX VI SUMMARY OF INDICATIONS

SUMMARY OF INDICATIONS

ATTACHMENT 1 AUGMENTED EXAMINATION SUMMARY

SECTION 1: AUGMENTED SUMMARY
SECTION 2: EXAMINATIONS PERFORMED DURING UNIT 2 CYCLE 12 (EXAMINATION SUMMARY)

ATTACHMENT 2 IWE-BFN CONTAINMENT INSERVICE INSPECTION PROGRAM

OWNER: TENNESSEE VALLEY AUTHORITY OFFICE OF NUCLEAR POWER 1101 MARKET STREET CHATTANOOGA, TENNESSEE 37402	PLANT: BROWNS FERRY NUCLEAR PLANT P.O. BOX 2000 DECATUR, ALABAMA 35609-2000
UNIT: TWO	CERTIFICATE OF AUTHORIZATION: NOT REQUIRED.
COMMERCIAL SERVICE DATE: MARCH 1, 1975	
NATIONAL BOARD NUMBER FOR UNIT: NOT REQUIRED.	

APPENDIX I

NIS-1 OWNER'S REPORT

OWNER: TENNESSEE VALLEY AUTHORITY OFFICE OF NUCLEAR POWER 1101 MARKET STREET CHATTANOOGA, TENNESSEE 37402	PLANT: BROWNS FERRY NUCLEAR PLANT P.O. BOX 2000 DECATUR, ALABAMA 35609-2000
UNIT: TWO	CERTIFICATE OF AUTHORIZATION: NOT REQUIRED.
COMMERCIAL SERVICE DATE: MARCH 1, 1975	
NATIONAL BOARD NUMBER FOR UNIT: NOT REQUIRED.	

Inservice Inspection Introduction Summary

In accordance with paragraph IWA-6230 of 1995 Edition, 1996 Addenda of Section XI of the ASME Boiler and Pressure Vessel Code the following information is provided.

1. Date of document completion: May 27, 2003

2. Name of owner and address of principal offices:

   Tennessee Valley Authority
   Office Of Nuclear Power
   1101 Market Street
   Chattanooga, Tennessee 37402-2801

3. Name and address of the nuclear generating plant:

   Browns Ferry Nuclear Plant
   P.O. Box 2000
   Decatur, Alabama 35602

4. Name or number assigned to the nuclear power unit by TVA:

   Browns Ferry Nuclear Plant, Unit 2.

5. Commercial operation date of unit:

   March 1, 1975

FORM NIS-1 OWNERS' REPORT FOR INSERVICE INSPECTIONS
As required by the Provisions of the ASME Code Rules

1. Owner Tennessee Valley Authority, 1101 Market St. Chattanooga, TN. 37402
(Name and Address of Owner)

2. Plant Browns Ferry Nuclear Plant, P.O. Box 2000 Decatur, AL. 35602
(Name and Address of Plant)

3. Plant Unit 2 4. Owner Certificate of Authorization Not Required

5. Commercial Service Date 03/01/75 6. National Board Number for Unit Not Required

7. Components Inspected:

Component or Appurtenance	Manufacturer or Installer	Manufacturer or Installer Serial No.	State or Province No.	National Board No.
Reactor Pressure Vessel	General Electric	Contract No. 67C31-90744	N/A	N/A
Various systems and components. (See Appendix V)	TVA	N/A	N/A	N/A
The NIS-1 Owners Report for Inservice Inspections includes Appendices I, II, III, IV, V, and VI.				

Note: Supplemental sheets in form of lists, sketches, or drawings may be used provided (1) size is 8.5 in. X 11 in., (2) information in items 1 through 6 on this data report is included on each sheet, and (3) each sheet is numbered and the number of sheets is recorded at the top of this form.

FORM NIS-1 (back)

8. Examination Dates 07/18/01 to 03/14/03

9. Inspection Period Identification: First Period, 05/25/01 to 05/24/04

10. Inspection Interval Identification: 05/25/01 to 05/24/2011

11. Applicable Edition of Section XI 1995 Edition Addenda 1996

12. Date/Revision of Inspection Plan: 2-SI-4.6.G Revision 020

13. Abstract of Examinations and Tests. Include a list of examinations and tests and a statement concerning status of work required for the Inspection Plan.

    See Appendix II, III, IV, V, VI, and Attachment 2

14. Abstract of Results of Examinations and Tests.

    See Appendix II, III, IV, V, VI, and Attachment 2

15. Abstract of Corrective Measures. See Appendix VI

We certify that a) the statements made in this report are correct, b) the examinations and tests meet the Inspection Plan as required by the ASME Code, Section XI, and c) corrective measures taken conform to the rules of the ASME Code, Section XI.

Certificate of Authorization No. Not Applicable Expiration Date Not Applicable

Date 6/2, 2003 Signed Tennessee Valley Authority By
Owner

CERTIFICATE OF INSERVICE INSPECTION

I, The undersigned, holding a valid commission issued by the National Board of Boiler and Pressure Vessel Inspectors and the State or Province of Tennessee and employed by HSBI & I of Hartford, CT., have inspected the components described in this Owners' Report during the period 07/18/01 to 03/14/03, and state that to the best of my knowledge and belief, the Owner has performed examinations and tests and taken corrective measures described in this Owners' Report in accordance with the Inspection Plan and as required by the ASME Code, Section XI.

By signing this certificate neither the Inspector nor his employer makes any warranty, expressed or implied, concerning the examinations tests, and corrective measures described in this Owners' Report. Furthermore, neither the Inspector nor his employer shall be liable in any manner for any personal injury or property damage or a loss of any kind arising from or connected with this inspection.

Albert Ladd Commissions TN3135
Inspectors Signature National Board, State, Province and No.

Date June 4, 2003

OWNER: TENNESSEE VALLEY AUTHORITY OFFICE OF NUCLEAR POWER 1101 MARKET STREET CHATTANOOGA, TENNESSEE 37402	PLANT: BROWNS FERRY NUCLEAR PLANT P.O. BOX 2000 DECATUR, ALABAMA 35609-2000
UNIT: TWO	CERTIFICATE OF AUTHORIZATION: NOT REQUIRED.
COMMERCIAL SERVICE DATE: MARCH 1, 1975	
NATIONAL BOARD NUMBER FOR UNIT: NOT REQUIRED.	

APPENDIX II

SCOPE AND INTRODUCTION

OWNER: TENNESSEE VALLEY AUTHORITY OFFICE OF NUCLEAR POWER 1101 MARKET STREET CHATTANOOGA, TENNESSEE 37402	PLANT: BROWNS FERRY NUCLEAR PLANT P.O. BOX 2000 DECATUR, ALABAMA 35609-2000
UNIT: TWO	CERTIFICATE OF AUTHORIZATION: NOT REQUIRED.
COMMERCIAL SERVICE DATE: MARCH 1, 1975	
NATIONAL BOARD NUMBER FOR UNIT: NOT REQUIRED.	

Scope:

The scope of this appendix is to provide an overview of the Inservice inspections performed during the Unit 2/Cycle 12 Outage on Class 1 and 2 components for ASME Section XI Code credit and other augmented examinations.

Introduction:

The examinations were performed in accordance with implementing plant surveillance instruction 2-SI-4.6.G "Inservice Inspection and Risk Informed Inservice Inspection Program Unit 2". 2-SI-4.6.G is organized to comply with the ISI NDE requirements of the 1995 Edition, 1996 Addenda of the American Society of Mechanical Engineers (ASME) Boiler and Pressure Vessel Code, Section XI, Division 1, Articles IWX-1000, IWX-2000, IWX-3000, and IWX-6000 in accordance with Title 10 Code of Federal Regulations (CFR) Part 50, 50.55a (g); to implement the Browns Ferry Nuclear Plant (BFN) Technical Requirements TR-3.4.3; and to fulfill the requirements of SPP-9.1, ASME Section XI Inservice Inspection Program.

Beginning in the Third Period of the Second Inspection Interval , Surveillance Instruction 2-SI-4.6.G implemented the NRC approved BFN Risk-Informed Inservice Inspection Program to address all piping locations that are subject to service induced degradation. In accordance with, "Westinghouse Owners Group (WOG) Application Of Risk-Informed Methods To Piping Inservice Inspection Topical Report, WCAP-14572 revision 1-NP-A, Section 4, Table 4.1-1," this program provides an acceptable alternative approach to the existing ASME Section XI requirements for scope and frequency of piping weld examinations, and satisfies the criteria of 10CFR50.55a(a)(3)(i) providing an acceptable level of quality and safety.

2-SI-4.6.G reflects the built-in limitations of the original plant design, geometry, construction, component materials and the current technology or state-of-the-art nondestructive examination techniques. The SI specifies the methods to be used and provides schedule tables from which specific items were scheduled for examination during the outage. Examinations were witnessed or verified by an Authorized Nuclear Inservice Inspector (ANII) and performed in accordance with the Section XI of the ASME Boiler and Pressure Vessel Code.

Inservice Inspections for the Unit 2 Cycle 12 refueling outage began on July 18, 2001 and ended on March 14, 2003. ISI examinations were performed on the following systems: Control Rod Drive (CRD), Core Spray (CS), Reactor Feedwater (FW), High Pressure Coolant Injection (HPCI), Main Steam (MS), Reactor Recirculation (RECIRC), Residual Heat Removal (RHR), Reactor Pressure Vessel (RPV), and Reactor Water Clean-up (RWCU).

OWNER: TENNESSEE VALLEY AUTHORITY OFFICE OF NUCLEAR POWER 1101 MARKET STREET CHATTANOOGA, TENNESSEE 37402	PLANT: BROWNS FERRY NUCLEAR PLANT P.O. BOX 2000 DECATUR, ALABAMA 35609-2000
UNIT: TWO	CERTIFICATE OF AUTHORIZATION: NOT REQUIRED.
COMMERCIAL SERVICE DATE: MARCH 1, 1975	
NATIONAL BOARD NUMBER FOR UNIT: NOT REQUIRED.	

The majority of examinations were performed by the TVA Inspection Services Organization (ISO). Augmentation of personnel was provided by Wesdyne, Inc., and Framatome ANP.

An overview of ISI activities consists of the following:

. ASME Section XI Class 1 and 2 Piping Examinations

. ASME Section XI Class 1 Reactor Pressure Vessel Weld Examinations

. ASME Section XI Class 1 and 2 Support Examinations

. Reactor Pressure Vessel In-Vessel Visual Inspection Examinations (RPVII)

. Augmented Examinations

OWNER: TENNESSEE VALLEY AUTHORITY OFFICE OF NUCLEAR POWER 1101 MARKET STREET CHATTANOOGA, TENNESSEE 37402	PLANT: BROWNS FERRY NUCLEAR PLANT P.O. BOX 2000 DECATUR, ALABAMA 35609-2000
UNIT: TWO	CERTIFICATE OF AUTHORIZATION: NOT REQUIRED.
COMMERCIAL SERVICE DATE: MARCH 1, 1975	
NATIONAL BOARD NUMBER FOR UNIT: NOT REQUIRED.	

APPENDIX III

ISI ABSTRACT

OWNER: TENNESSEE VALLEY AUTHORITY OFFICE OF NUCLEAR POWER 1101 MARKET STREET CHATTANOOGA, TENNESSEE 37402	PLANT: BROWNS FERRY NUCLEAR PLANT P.O. BOX 2000 DECATUR, ALABAMA 35609-2000
UNIT: TWO	CERTIFICATE OF AUTHORIZATION: NOT REQUIRED.
COMMERCIAL SERVICE DATE: MARCH 1, 1975	
NATIONAL BOARD NUMBER FOR UNIT: NOT REQUIRED.	

Examination Summary:

The Unit 2, Cycle 12 Inservice Inspection (ISI) was the first scheduled refueling outage during the first inspection period of the third ASME Section XI 10-year inspection interval. Approximately 123 visual (7 of which were RPV Nozzle Inner Radius Sections Code Category B-D, Item No. B3.100, performed from vessel ID, reference RFR # 2-ISI-16 and 2-ISI-17), 2 visual exams were successive examinations, 48 ultrasonic (9 of these welds are inclusive to take credit for BWRVIP-75, IGSCC Category "C" credit), 10 magnetic particle and 8 liquid penetrant examinations were performed in support of code credit components. Also, preservice examinations were performed; 8 visual examinations. Six (6) Notification of Indications (NOI's) were issued to document indications identified during the performance of the examinations. These NOI's were evaluated by engineering and dispositioned (see Appendix VI, Summary of Indications). These examinations were performed on ASME Section XI Code Class 1 and 2 Components. ASME Code Category and Item Numbers for components examined are listed in Appendix V.

Other examinations were performed in accordance with BFN's augmented inspection program and are included in Attachment 1 for information. Approximately 273 visual, 15 ultrasonic, and 11 radiography examinations were performed in accordance with the augmented programs. These totals are inclusive of the Reactor Pressure Vessel Internals Inspection (RPVII) Augmented examination program on Unit 2 RPV internals.

OWNER: TENNESSEE VALLEY AUTHORITY OFFICE OF NUCLEAR POWER 1101 MARKET STREET CHATTANOOGA, TENNESSEE 37402	PLANT: BROWNS FERRY NUCLEAR PLANT P.O. BOX 2000 DECATUR, ALABAMA 35609-2000
UNIT: TWO	CERTIFICATE OF AUTHORIZATION: NOT REQUIRED.
COMMERCIAL SERVICE DATE: MARCH 1, 1975	
NATIONAL BOARD NUMBER FOR UNIT: NOT REQUIRED.	

ASME Code Cases

The following code cases have been approved for use as applicable during the Unit 2/Cycle 12 outage:

N-498-1	Alternate Rules for 10-Year System Hydrostatic Testing for Class 1, 2 and 3 Systems Section XI Division 1
N-532	Alternative Requirements to Repair and Replacement Documentation Requirements and Inservice Summary Report and Submission as Required by IWA-4000 and IWA-6000- Section XI Division 1.
N-577	Risk-Informed Requirements for Class 1, 2, and 3 Piping, Method A, , Section XI, Division 1, (RIMS # R08 000601 846), with the more detailed provisions provided in WCAP-14572, Revision 1-NPA, "Westinghouse Owners Group Application Of Risk - Informed Methods To Piping Inservice Inspection Topical Report." Reference Safety Evaluation Report (SER) from NRC Date January 19, 2001.

OWNER: TENNESSEE VALLEY AUTHORITY OFFICE OF NUCLEAR POWER 1101 MARKET STREET CHATTANOOGA, TENNESSEE 37402	PLANT: BROWNS FERRY NUCLEAR PLANT P.O. BOX 2000 DECATUR, ALABAMA 35609-2000
UNIT: TWO	CERTIFICATE OF AUTHORIZATION: NOT REQUIRED.
COMMERCIAL SERVICE DATE: MARCH 1, 1975	
NATIONAL BOARD NUMBER FOR UNIT: NOT REQUIRED.	

UNIT 2 INTERVAL STATUS

The BFN Unit 2 cycle 12 outage ISI examinations were performed during the first and only scheduled refueling outage of the first period of the third interval. The component quantities examined were determined from 2-SI-4.6.G, Table 8.1 (Parts 1, 2, 3, 4, and 6), Unit 2 Class 1 and 2 components, and from applicable BFN Unit 2 relief requests. This NIS-1 report covers the Cycle 12 Outage for Browns Ferry Unit 2. The following table summarizes the percentage of Code required examinations completed to date.

Table 1 summarizes code credited examinations by category and percentages completed and complies with ASME Section XI percentage requirements.

TABLE 1
ASME SECTION XI EXAMINATION SUMMARY FOR THE FIRST PERIOD OF THE THIRD TEN-YEAR INSPECTION INTERVAL

CATEGORY	% COMPLETE	COMMENTS
B-A	12%	Reference RFR # 2-ISI-9 (Category B-A, Item No. B1.11)
B-B	N/A	
B-D	42%	Reference RFR # 2-ISI-16 and 2-ISI-17, approved by NRC
B-F	N/A	Risk-Informed ISI implemented in the second interval
B-G-1	12%	
B-G-2	20%	Item No. B7.50 Pipe Bolting
B-G-2	22%	Item No.B7.70 Valve Bolting, inspect when the valve is disassembled
B-J	N/A	Risk-Informed ISI implemented in the second interval
B-K	29%	
B-L-1	N/A	
B-L-2	0%	
B-M-1	N/A	
B-M-2	14%	When disassembled
B-N-1	33%	Each period
B-N-2	0%	Deferral permissible
B-O	N/A	Make-up exclusion reference 2-SI-4.6.G, Paragraph 7.1.3.G
B-P	N/A	Refer to pressure test program
C-A	25%	
C-B	33%	
C-C	31%	
C-D	N/A	
C-F-1	N/A	Risk-Informed ISI implemented in the second interval
C-F-2	N/A	Risk-Informed ISI implemented in the second interval
C-G	N/A	
F-A	32%	ASME Code Class 1 and 2 Pipe Supports only
R-A	22%	Risk-Informed ISI implemented in the second period second interval. This percentage does not include Flow Accelerated Corrosion (FAC) Item # R1.18.

OWNER: TENNESSEE VALLEY AUTHORITY OFFICE OF NUCLEAR POWER 1101 MARKET STREET CHATTANOOGA, TENNESSEE 37402	PLANT: BROWNS FERRY NUCLEAR PLANT P.O. BOX 2000 DECATUR, ALABAMA 35609-2000
UNIT: TWO	CERTIFICATE OF AUTHORIZATION: NOT REQUIRED.
COMMERCIAL SERVICE DATE: MARCH 1, 1975	
NATIONAL BOARD NUMBER FOR UNIT: NOT REQUIRED.	

PERSONNEL/EQUIPMENT CERTIFICATIONS:

NDE personnel certification records for TVA and contractor employees are maintained by TVA's Nuclear Engineering and Technical Services Corporate, Inspection Services Organization (ISO). These records are maintained as permanent QA records for a forty year plant life. Any details or specifics regarding NDE certification records should be directed to the ISO at the Sequoyah Training Center in Soddy-Daisy, Tennessee at telephone number (423) 843-4026.

NDE equipment certification records are maintained by the TVA ISO. Any details or specifics regarding NDE equipment certification records should be directed to ISO at the Sequoyah Training Center in Soddy Daisy, Tennessee at telephone number (423)843-4026.

OWNER: TENNESSEE VALLEY AUTHORITY OFFICE OF NUCLEAR POWER 1101 MARKET STREET CHATTANOOGA, TENNESSEE 37402	PLANT: BROWNS FERRY NUCLEAR PLANT P.O. BOX 2000 DECATUR, ALABAMA 35609-2000
UNIT: TWO	CERTIFICATE OF AUTHORIZATION: NOT REQUIRED.
COMMERCIAL SERVICE DATE: MARCH 1, 1975	
NATIONAL BOARD NUMBER FOR UNIT: NOT REQUIRED.	

APPENDIX IV
EXAMINATION LIMITATIONS

OWNER: TENNESSEE VALLEY AUTHORITY OFFICE OF NUCLEAR POWER 1101 MARKET STREET CHATTANOOGA, TENNESSEE 37402	PLANT: BROWNS FERRY NUCLEAR PLANT P.O. BOX 2000 DECATUR, ALABAMA 35609-2000
UNIT: TWO	CERTIFICATE OF AUTHORIZATION: NOT REQUIRED.
COMMERCIAL SERVICE DATE: MARCH 1, 1975	
NATIONAL BOARD NUMBER FOR UNIT: NOT REQUIRED.	

METHOD OF CALCULATION OF LIMITATIONS

During the performance of Inservice Inspections, the ASME Section XI Code 1995 Edition, 1996 Addenda, requires the determination of the ultrasonic examination volume to establish the required beam path angles needed to maximize coverage and verify technique parameters. This information is necessary in those instances where there may be a reduction in the examination volume.

Surface examinations are typically conducted on 100% of the weld length plus a defined amount of base material on each side of the weld. Surface areas are calculated in those instances where there may be a reduction in the examination area.

The Code required ultrasonic examination volume or surface examination area for each type of piping weld or nozzle-to-vessel weld is depicted in the figures of IWB-2500 or IWC-2500. As depicted for piping welds, volume width generally constitutes the weld plus 1/4" on each side while volume thickness generally constitutes the lower 1/3 of the piping thickness for the length of the weld. As depicted, for nozzle-to-vessel welds, the volume width generally constitutes the weld plus 1/2t (ts/2) on each side of the weld while volume thickness generally constitutes the entire component thickness (i.e. full volume). The volume changes with variations in weld configuration (e.g. transition between different pipe thickness or nozzle-to-vessel configuration). Therefore, it is necessary to determine the required volume for each group of similar welds to allow setting of scanner limits for automated ultrasonic examinations and scan paths for manual ultrasonic examinations. Surface examination area is generally the weld plus 1/2-inch of base material on each side of the weld.

Reactor Pressure Vessel Nozzle to shell or head weld examination volume has been reduced to ½" beyond the widest part of the boundary of the deposited weld material in lieu of the requirements of ASME Section XI Figures IWB-2500-7 (a) and IWB-2500-7 (b) per Request For Relief No. PDI-2 .

Paragraph IWA-2232 of the Code requires that the ultrasonic examination of piping systems be conducted in accordance with Appendix I of ASME Section XI. Appendix I requires that the ultrasonic examination of piping systems be conducted in accordance with Appendix VIII of ASME Section XI, and the nozzle-to-vessel welds be conducted in accordance with Article 4 of ASME Section V, 1995 Edition, 1996 Addenda as supplemented by Appendix I of ASME Section XI. Appendix VIII and Article 4 define the applicable examination methods (e.g., examination angles, scan directions) to be used during examination.

TVA developed procedure N-GP-28 to provide a standardized methodology for calculation of Code coverage in those instances where configuration or other components cause an examination limitation. Components/welds with limitations were evaluated in terms of the feasibility of other NDE techniques or methods to increase coverage.

OWNER: TENNESSEE VALLEY AUTHORITY OFFICE OF NUCLEAR POWER 1101 MARKET STREET CHATTANOOGA, TENNESSEE 37402	PLANT: BROWNS FERRY NUCLEAR PLANT P.O. BOX 2000 DECATUR, ALABAMA 35609-2000

UNIT: TWO CERTIFICATE OF AUTHORIZATION: NOT REQUIRED.

COMMERCIAL SERVICE DATE: MARCH 1, 1975

NATIONAL BOARD NUMBER FOR UNIT: NOT REQUIRED.

EXAMINATION LIMITATIONS:

A tabulation of NDE examination limitations recorded during the Unit 2/Cycle 12 Inservice Inspection is contained in this Appendix.

The following items/components had less than 100% R-A/Code coverage achieved. In accordance with the 1995 Edition, 1996 Addenda of ASME Section XI Code and NRC Information Notice, 98-42 "Implementation Of 10 CFR 50.55a(g) Inservice Inspection Requirements," which defines , "essentially 100%" of each weld to mean "greater than 90%" in 10CFR 50.55a(g)(6)(ii)(A)(2) for required examination coverage of reactor pressure vessel welds. This standard has been applied to all examinations of welds or other areas required by ASME Section XI.

SYSTEM	COMPONENT ID	COVERAGE CALCULATED ASME XI	COVERAGE CALCULATED 10CFR50.55a	REPORT NO.
RHR	RHRG-2-07A	92.5%	92.5%	R-027
RPV	RCH-2-1V	94%	94%	R-113
RPV	N6A-NV	90.5%	90.5%	R-110

The following items/components had examination limitations outside those specified in 1995 Edition, 1996 Addenda of ASME Section XI Code and NRC Information Notice, 98-42 "Implementation Of 10 CFR 50.55a(g) Inservice Inspection Requirements." The Inservice Inspection Program 2-SI-4.6.G will be revised to incorporate these limitations in the form of Requests for Relief (RFR). Program revisions, including Requests for Relief, will be submitted to the NRC.

SYSTEM	COMPONENT ID	COVERAGE CALCULATED ASME XI	COVERAGE CALCULATED 10CFR50.55a	REPORT NO.	RFR No.
RECIRC	KR-2-25	75%	50%	R-066	2-ISI-18
RWCU	RWCU-2-003-G003	100%	75%	R-124	2-ISI-18

The following items/components had examination limitations outside those specified in 1995 Edition, 1996 Addenda of ASME Section XI Code and NRC Information Notice, 98-42 "Implementation Of 10 CFR 50.55a(g) Inservice Inspection Requirements." The Inservice Inspection Program 2-SI-4.6.G will be revised to incorporate these limitations in the form of Requests for Relief (RFR). Program revisions, including Requests for Relief, will be submitted to the NRC. Reference BFN RFR# 2-ISI-16 and 2-ISI-17.

SYSTEM	COMPONENT ID	COVERAGE CALCULATED	REPORT NO.	RFR No.
RPV	N1A	48.8%	R-160	2-ISI-19
RPV	N2B	51.5%	R-161	2-ISI-19
RPV	N2F	51.5%	R-162	2-ISI-19
RPV	N2J	51.5%	R-163	2-ISI-19
RPV	N3D	47.3%	R-164	2-ISI-19
RPV	N4A	45.4%	R-141	2-ISI-19
RPV	N4B	45.4%	R-142	2-ISI-19
RPV	N4C	45.4%	R-143	2-ISI-19
RPV	N4D	45.4%	R-144	2-ISI-19
RPV	N4E	45.4%	R-145	2-ISI-19

OWNER: TENNESSEE VALLEY AUTHORITY OFFICE OF NUCLEAR POWER 1101 MARKET STREET CHATTANOOGA, TENNESSEE 37402	PLANT: BROWNS FERRY NUCLEAR PLANT P.O. BOX 2000 DECATUR, ALABAMA 35609-2000

UNIT: TWO CERTIFICATE OF AUTHORIZATION: NOT REQUIRED.

COMMERCIAL SERVICE DATE: MARCH 1, 1975

NATIONAL BOARD NUMBER FOR UNIT: NOT REQUIRED.

EXAMINATION LIMITATIONS: (CONTINUED)

SYSTEM	COMPONENT ID	COVERAGE CALCULATED	REPORT NO.	RFR No.
RPV	N4F	45.4%	R-146	2-ISI-19
RPV	N8A	89.5%	R-165	2-ISI-19

The following BFN Unit 2 Reactor Pressure Vessel Inner Radius Sections, Code Category, B-D, Item No. B3.100, received an Enhanced Remote Visual (EVT-1) examination, capable of a 1-mil wire resolution in accordance with ASME Section XI, VT-1 requirements. This was in lieu of a volumetric examination required in accordance with the 1995 Edition, 1996 Addenda of ASME Section XI Code.
This was in accordance with Request For Relief # 2-ISI-17 for the Reactor Pressure Vessel Nozzles, N2A, N2B, N2C, N2D, N2E, N2F, N2G, N2H, N2J, N2K, N5A, N5B, N8A, and N8B, approved by the NRC on October 07, 2001, (TAC NO. MB4880). TVA provided the NRC specific limitations and estimated coverage's for each nozzle in the Request For Relief # 2-ISI-17. TVA is reporting the actual coverage's obtained during the Enhanced Remote Visual (EVT-1) examination, capable of a 1-mil wire resolution in this report below.

SYSTEM	COMPONENT ID	ESIMATED COVERAGE	ACTUAL COVERAGE	REPORT NO.
RPV	N2B-IR	50%	60%	R-169
RPV	N2F-IR	50%	60%	R-169
RPV	N2J-IR	50%	60%	R-169
RPV	N8A-IR	60%	60%	R-169

OWNER: TENNESSEE VALLEY AUTHORITY OFFICE OF NUCLEAR POWER 1101 MARKET STREET CHATTANOOGA, TENNESSEE 37402	PLANT: BROWNS FERRY NUCLEAR PLANT P.O. BOX 2000 DECATUR, ALABAMA 35609-2000
UNIT: TWO	CERTIFICATE OF AUTHORIZATION: NOT REQUIRED.
COMMERCIAL SERVICE DATE: MARCH 1, 1975	
NATIONAL BOARD NUMBER FOR UNIT: NOT REQUIRED.	

APPENDIX V

EXAMINATION PLAN

OWNER: TENNESSEE VALLEY AUTHORITY OFFICE OF NUCLEAR POWER 1101 MARKET STREET CHATTANOOGA, TENNESSEE 37402	PLANT: BROWNS FERRY NUCLEAR PLANT P.O. BOX 2000 DECATUR, ALABAMA 35609-2000
UNIT: TWO	CERTIFICATE OF AUTHORIZATION: NOT REQUIRED.
COMMERCIAL SERVICE DATE: MARCH 1, 1975	
NATIONAL BOARD NUMBER FOR UNIT: NOT REQUIRED.	

The following printout is an outage ISI report designed to meet the reporting requirements of IWA-6000 of the ASME Section XI Code. This report contains Unit 2/Cycle 12 Inservice Inspection data for Code Class 1 and Code Class 2 components selected for ASME Section XI credit. Attachment 1 contains a summary of Augmented examinations performed during Unit 2/Cycle 12 outage. Attachment 2 contains a summary of IWE-Containment Insrevice Inspection (CISI) examinations performed during the Unit 2 Cycle 12 outage. Essential unit and system files are contained herein as a reference to describe abbreviations and features in the printout. The aforementioned precedes the outage ISI report.

Code Class 3 Inservice data and reports are contained in the Browns Ferry Inservice Inspection (ISI) Final Plant Report.

OWNER: TENNESSEE VALLEY AUTHORITY OFFICE OF NUCLEAR POWER 1101 MARKET STREET CHATTANOOGA, TENNESSEE 37402	PLANT: BROWNS FERRY NUCLEAR PLANT P.O. BOX 2000 DECATUR, ALABAMA 35609-2000
UNIT: TWO	CERTIFICATE OF AUTHORIZATION: NOT REQUIRED.
COMMERCIAL SERVICE DATE: MARCH 1, 1975	
NATIONAL BOARD NUMBER FOR UNIT: NOT REQUIRED.	

UNIT 2/CYCLE 12
ISI REPORT OF CLASS 1 AND CLASS 2 COMPONENTS

OWNER: TENNESSEE VALLEY AUTHORITY OFFICE OF NUCLEAR POWER 1101 MARKET STREET CHATTANOOGA, TENNESSEE 37402	PLANT: BROWNS FERRY NUCLEAR PLANT P.O. BOX 2000 DECATUR, ALABAMA 35602
UNIT: TWO	CERTIFICATE OF AUTHORIZATION: NOT REQUIRED.
COMMERCIAL SERVICE DATE: MARCH 1, 1975	
NATIONAL BOARD NUMBER FOR UNIT: NOT REQUIRED.	

Key to computer weld/feature tracking system

A. CYCLE- Refueling Cycle Number and Unit Number
B. SYSTEM- System/Component

CCWS- Closed Cooling Water System (Reactor Building Closed Cooling Water)
CRDS- Control Rod Drive System
CSS- Core Spray System
EECW- Emergency Equipment Cooling Water System
FPCS- Fuel Pool Cooling System
FWS- Feedwater System
HPCIS- High Pressure Coolant Injection System
MSS- Main Steam System
RCICS- Reactor Core Isolation Cooling System
RECIR- Recirculation System
RHRS- Residual Heat Removal System
RHRSW- Residual Heat Removal Service Water System
RPV- Reactor Pressure Vessel
RWCU- Reactor Water Cleanup System

C. Component Number/Identifier

D. Drawing- ISI Drawing Number and sheet number from the Surveillance Instruction (SI-4.6.G)

E. Exreq- ASME Section XI Code year and interval (See Note # 1)

F. Category- Code Category

G. Item Number- Code Item Number

H. Exam Scheduled

I. NDE METH- Nondestructive Examination (NDE) Method

ET- Eddy Current Test
MT- Magnetic Particle Test
PT- Penetrant Test
RT- Radiography Test
UT- Ultrasonic Test
VT- Visual Test

OWNER: TENNESSEE VALLEY AUTHORITY OFFICE OF NUCLEAR POWER 1101 MARKET STREET CHATTANOOGA, TENNESSEE 37402	PLANT: BROWNS FERRY NUCLEAR PLANT P.O. BOX 2000 DECATUR, ALABAMA 35602
UNIT: TWO	CERTIFICATE OF AUTHORIZATION: NOT REQUIRED.
COMMERCIAL SERVICE DATE: MARCH 1, 1975	
NATIONAL BOARD NUMBER FOR UNIT: NOT REQUIRED.	

J. Calibration Standard- If required

K. Exam Date- Date of Inspection

L. Exam Report No.- Examination Report Number

M. Exam Results - P - Pass
R- Rejectable
E- Evaluated acceptable for continued operation by Engineering

O. COMMENTS

NOTE (1): EXREQ Identifiers:

96E-03 - ASME Section XI Code 1995 Edition, 1996 Addenda/ Third Interval

P95-96 - Preservice Examination Cycle 12/ Third Interval

B01-02 - Feedwater Sparger Visual (VT-1) Examinations to 0-TI-365

B02-02 - Examinations performed to BWRVIP-75 for IGSCC detection

B04-02 - Weld inspection for Pipe Whip Protection

B07-02 - Examinations performed to the recommendations of BWRVIP-27 and BWRVIP-49

S01-03 - Successive Examinations

V01-02 - Voluntary Examinations

OTI365 - Augmented examinations of RPV Internals

November 26, 2002

Albert Ladd, ANI/ANII, PEC-1C, BFN

BROWNS FERRY NUCLEAR PLANT (BFN) - UNIT 2 CYCLE 12 REFUELING OUTAGE INSERVICE INSPECTION (ISI) SCAN PLAN, REVISION 0.

Attached for your review is the BFN Unit 2 Cycle 12 refueling outage ISI Scan Plan, Revision 0. The examinations are scheduled to be performed during the Unit 2 outage by BFN Site Engineering/Component Engineering. The examinations are performed to satisfy the requirements of ASME Code Section XI, 1995 Edition, 1996 Addenda.

This document was prepared by Hal Hodges of BFN Component Engineering and coordinated with Fred Froscello and Darlene Tinley of TVAN Inspection Services.

01/10/03
11/26/02

1-10-03

Harold E. Hodges
BFN Component Engineering

11/26/02

Frederick W. Froscello
ISO, ISI/NDE, Supervisor, BFN

Darlene Tinley
ISO, NDE Level III

1/23/03

Kevin Groom
BFN Mechanical Design Engineering
FAC Concurrence

1/24/03

Albert Ladd, ANI/ANII
Concurrence

cc: R. L. Golub, PEC-1C, BFN
M. L. Turnbow, STC-1I,

Revision 000
01/10/2003
Total Examinations: 242

TENNESSEE VALLEY AUTHORITY
BROWNS FERRY NUCLEAR POWER PLANT - UNIT 2
EXAMS SCHEDULED FOR CYCLE 12

SYSTEM	WELDNO	SEGMENT	ISONO	CYCLE	ITEMNO	CATEGORY	EXREQ	EXSCHD	NDEPROC	CALSTD	COMPDIA	NOMTHCK	COMPDESA	COMPDESB
CRDS	2-47B468S0006		2-ISI-0041-C-01	12	F1.20B	F-A	96E-03	VT-3	N-VT-1		06.00		RGD HGR	
CRDS	2-47B468S0007		2-ISI-0041-C-01	12	F1.20B	F-A	96E-03	VT-3	N-VT-1		06.00		RGD HGR	
CRDS	2-47B468S0012		2-ISI-0041-C-01	12	F1.20A	F-A	96E-03	VT-3	N-VT-1		06.00		RGD STRT	HRS
CRDS	2-47B468S0016		2-ISI-0041-C-02	12	F1.40B	F-A	96E-03	VT-3	N-VT-1		12.00		RGD HGR	
CRDS	2-47B468S0017		2-ISI-0041-C-02	12	F1.40B	F-A	96E-03	VT-3	N-VT-1		12.00		RGD SUP	
CRDS	2-47B468S0018		2-ISI-0041-C-02	12	F1.40B	F-A	96E-03	VT-3	N-VT-1		12.00		VSL SUP	
CRDS	2-47B468S0018-IA		2-ISI-0041-C-02	12	C3.20	C-C	96E-03	MT	N-MT-6			0.688	WLD ATT	
CRDS	2-47B468S0040		2-ISI-0041-C-01	12	F1.20A	F-A	96E-03	VT-3	N-VT-1		06.00		RGD HGR	
CSS	2-47B458S0004		2-ISI-0280-C-01	12	F1.10D	F-A	96E-03	VT-3	N-VT-1		12.00		SNBR	
CSS	2-47B458S0007		2-ISI-0280-C-01	12	F1.10D	F-A	96E-03	VT-3	N-VT-1		12.00		SNBR	
CSS	2-47B458S0010		2-ISI-0280-C-01	12	F1.10C	F-A	96E-03	VT-3	N-VT-1		12.00		VAR SUP	
CSS	CS-2-H-1		2-ISI-0105-C-02	12	F1.20A	F-A	96E-03	VT-3	N-VT-1		12.00		RGD HGR	
CSS	CS-2-H-11		2-ISI-0105-C-02	12	F1.20C	F-A	96E-03	VT-3	N-VT-1		12.00		VAR SUP	
CSS	CS-2-H-11-IA		2-ISI-0105-C-02	12	C3.20	C-C	96E-03	MT	N-MT-6			0.750	WLD ATT	
CSS	CS-2-H-2		2-ISI-0105-C-02	12	F1.20C	F-A	96E-03	VT-3	N-VT-1		14.00		VAR SUP	
CSS	CS-2-H-21		2-ISI-0105-C-01	12	F1.20A	F-A	96E-03	VT-3	N-VT-1		14.00		RGD SUP	
CSS	CS-2-H-7		2-ISI-0105-C-02	12	F1.20C	F-A	96E-03	VT-3	N-VT-1		14.00		VAR SUP	
CSS	CS-2-H-7-IA		2-ISI-0105-C-02	12	C3.20	C-C	96E-03	MT	N-MT-6			1.000	WLD ATT	
CSS	CS-2-PS-01		2-ISI-0105-C-01	12	F1.40B	F-A	96E-03	VT-3	N-VT-1				PMP SUP	
CSS	CS-48N1025-2-B		2-ISI-0105-C-02	12	F1.20B	F-A	96E-03	VT-3	N-VT-1		16.00		RGD ANCH	
CSS	DCS-2-07	2-075-001	2-ISI-0271-C-01	12	R1.16C	R-A	96E-03	UT	N-UT-64	SS Alt Cal Block	12.00	0.687	P	EL
CSS	DCS-2-07	2-075-001	2-ISI-0271-C-01	12	NU0313	C	B02-02	UT	N-UT-64	SS Alt Cal Block	12.00	0.687	P	EL
CSS	DCS-2-13A	2-075-001	2-ISI-0271-C-01	12	R1.16C	R-A	96E-03	UT	N-UT-64	SS Alt Cal Block	12.00	0.687	P	P
CSS	DCS-2-13A	2-075-001	2-ISI-0271-C-01	12	NU0313	C	B02-02	UT	N-UT-64	SS Alt Cal Block	12.00	0.687	P	P
CSS	DSCS-2-01	2-075-002	2-ISI-0271-C-01	12	R1.16C	R-A	96E-03	UT	N-UT-64	SS Alt Cal Block	12.00	0.687	P	EL
CSS	DSCS-2-01	2-075-002	2-ISI-0271-C-01	12	NU0313	C	B02-02	UT	N-UT-64	SS Alt Cal Block	12.00	0.687	P	EL
CSS	DSCS-2-02	2-075-002	2-ISI-0271-C-01	12	R1.16C	R-A	96E-03	UT	N-UT-64	SS Alt Cal Block	12.00	0.687	EL	P
CSS	DSCS-2-02	2-075-002	2-ISI-0271-C-01	12	NU0313	C	B02-02	UT	N-UT-64	SS Alt Cal Block	12.00	0.687	EL	P
CSS	FCV-75-26		2-ISI-0271-C-01	12	B12.50	B-M-2	96E-03	VT-3	N-VT-1		12.75		INT	

SYSTEM	WELDNO	SEGMENT	ISONO	CYCLE	ITEMNO	CATEGORY	EXREQ	EXSCHD	NDEPROC	CALSTD	COMPDIA	NOMTHCK	COMPDESA	COMPDESB
CSS	TCS-2-407		2-ISI-0271-C-01	12	TS3432	B-J	B04-02	UT	N-UT-76	CS Alt Cal Block	12.75	0.687	EL	P
EECWS	0-37B205S0056-IA		ISI-0368-C-01	12	D1.20	D-A	96E-03	VT-1	N-VT-1			0.375	WLD ATT	
EECWS	1-47B451R0055-IA		ISI-0368-C-14	12	D1.20	D-A	96E-03	VT-1	N-VT-1			0.750	WLD ATT	
EECWS	RHRSW-PMP-0-B1		ISI-0368-C-02	12	F1.40B	F-A	96E-03	VT-3	N-VT-1				PMP SUP	
EECWS	RHRSW-STR-0-A1		ISI-0368-C-01	12	F1.40B	F-A	96E-03	VT-3	N-VT-1				RGD HGR	
FWS	2-47B415H0001		2-ISI-0277-C-01	12	F1.40C	F-A	96E-03	VT-3	N-VT-1		20.00		VAR SUP	
FWS	2-47B415H0004		2-ISI-0277-C-01	12	F1.10C	F-A	96E-03	VT-3	N-VT-1		12.00		CFS	
FWS	2-47B415H0004-IA		2-ISI-0277-C-01	12	B10.20	B-K	96E-03	MT	N-MT-6			1.625	WLD ATT	
FWS	2-47B415H0005		2-ISI-0277-C-01	12	F1.10C	F-A	96E-03	VT-3	N-VT-1		20.00		VAR SUP	
FWS	2-47B415H0007		2-ISI-0277-C-01	12	F1.40C	F-A	96E-03	VT-3	N-VT-1		24.00		VAR SUP	
FWS	2-47B415H0010		2-ISI-0277-C-01	12	F1.10C	F-A	96E-03	VT-3	N-VT-1		20.00		CFS	
FWS	2-47B415H0010-IA		2-ISI-0277-C-01	12	B10.20	B-K	96E-03	MT	N-MT-6			0.500	WLD ATT	
FWS	2-47B415S0002		2-ISI-0277-C-01	12	F1.10D	F-A	96E-03	VT-3	N-VT-1		12.00		SNBR	
FWS	2-47B415S0002-IA		2-ISI-0277-C-01	12	B10.20	B-K	96E-03	MT	N-MT-6			0.500	WLD ATT	
FWS	2-47B415S0005		2-ISI-0277-C-01	12	F1.10D	F-A	96E-03	VT-3	N-VT-1		12.00		SNBR	
FWS	2-47B415S0008		2-ISI-0277-C-01	12	F1.10D	F-A	96E-03	VT-3	N-VT-1		24.00		SNBR	
FWS	2-47B415S0010		2-ISI-0277-C-01	12	F1.10D	F-A	96E-03	VT-3	N-VT-1		12.00		SNBR	
FWS	2-47B415S0014		2-ISI-0277-C-01	12	F1.10D	F-A	96E-03	VT-3	N-VT-1		12.00		SNBR	
FWS	2-47B415S0019		2-ISI-0277-C-01	12	F1.10D	F-A	96E-03	VT-3	N-VT-1		20.00		SNBR	
FWS	2-47B415S0025		2-ISI-0277-C-01	12	F1.10B	F-A	96E-03	VT-3	N-VT-1		24.00		RGD HGR	
FWS	2RFW1B-27E	2-003-041	2-ISI-0269-C-01	12	R1.18	R-A	96E-03	UT	N-UT-26	Step Wedge			EL	
FWS	2RFW1B-30P	2-003-042	2-ISI-0269-C-01	12	R1.18	R-A	96E-03	UT	N-UT-26	Step Wedge			P	
FWS	2RFW1B-39E	2-003-043	2-ISI-0269-C-01	12	R1.18	R-A	96E-03	UT	N-UT-26	Step Wedge			EL	
FWS	2RFW1B-44E	2-003-043	2-ISI-0269-C-01	12	R1.18	R-A	96E-03	UT	N-UT-26	Step Wedge			EL	
FWS	2RFW1B-6E	2-003-007	2-ISI-0269-C-01	12	R1.18	R-A	96E-03	UT	N-UT-26	Step Wedge			EL	
FWS	2RFW2A-13T	2-003-036	2-ISI-0269-C-01	12	R1.18	R-A	96E-03	UT	N-UT-26	Step Wedge			TEE	
FWS	2RFW2A-16T	2-003-036	2-ISI-0269-C-01	12	R1.18	R-A	96E-03	UT	N-UT-26	Step Wedge			TEE	
FWS	2RFW2A-27E	2-003-037	2-ISI-0269-C-01	12	R1.18	R-A	96E-03	UT	N-UT-26	Step Wedge			EL	
FWS	2RFW2A-39E	2-003-039	2-ISI-0269-C-01	12	R1.18	R-A	96E-03	UT	N-UT-26	Step Wedge			EL	
FWS	2RFW2A-45P	2-003-039	2-ISI-0269-C-01	12	R1.18	R-A	96E-03	UT	N-UT-26	Step Wedge			P	
FWS	3-568		2-ISI-0269-C-01	12	B12.50	B-M-2	96E-03	VT-3	N-VT-1		24.00		INT	
FWS	GFW-2-15		2-ISI-0269-C-01	12	TS3432	B-J	B04-02	UT	N-UT-76	CS Alt Cal Block	12.75	0.844	TEE	P
FWS	KFW-2-38		2-ISI-0269-C-01	12	TS3432	B-J	B04-02	UT	N-UT-76	CS Alt Cal Block	12.75	0.844	EL	P
FWS	KFW-2-39		2-ISI-0269-C-01	12	TS3432	B-J	B04-02	UT	N-UT-76	CS Alt Cal Block	12.75	0.844	P	EL
HPCIS	2-47B455H0048-IA		ISI-0275-C-01	12	B10.20	B-K	96E-03	MT	N-MT-6			0.237	WLD ATT	
HPCIS	2-47B455H0060		2-ISI-0130-C-01	12	F1.20C	F-A	96E-03	VT-3	N-VT-1		10.00		VAR SUP	
HPCIS	2-47B455H0061		2-ISI-0130-C-01	12	F1.20C	F-A	96E-03	VT-3	N-VT-1		10.00		VAR SUP	

SYSTEM	WELDNO	SEGMENT	ISONO	CYCLE	ITEMNO	CATEGORY	EXREQ	EXSCHD	NDEPROC	CALSTD	COMPDIA	NOMTHCK	COMPDESA	COMPDESB
HPCIS	2-47B455H0065		2-ISI-0130-C-01	12	F1.20C	F-A	P95-96	VT-3	N-VT-1		10.00		VAR SUP	
HPCIS	2-47B455H0066		2-ISI-0130-C-02	12	F1.20C	F-A	96E-03	VT-3	N-VT-1		14.00		VAR SUP	
HPCIS	2-47B455S0003		ISI-0275-C-01	12	F1.10B	F-A	96E-03	VT-3	N-VT-1		10.00		RGD HGR	
HPCIS	FCV-73-03		ISI-0275-C-01	12	B12.50	B-M-2	96E-03	VT-3	N-VT-1		10.00		INT	
HPCIS	THPCI-2-066	2-073-001	2-ISI-0273-C-01	12	R1.11	R-A	96E-03	UT	N-UT-76	CS Alt Cal Block	10.00	0.593	TEE	P
HPCIS	THPCI-2-068	2-073-001	2-ISI-0273-C-01	12	R1.11	R-A	96E-03	UT	N-UT-76	CS Alt Cal Block	10.00	0.593	EL	P
HPCIS	THPCI-2-070	2-073-001	2-ISI-0273-C-01	12	R1.11	R-A	96E-03	UT	N-UT-76	CS Alt Cal Block	10.00	0.593	EL	P
HPCIS	THPCI-2-072		2-ISI-0273-C-01	12	TS3432	B-J	B04-02	UT	N-UT-76	CS Alt Cal Block	10.00	0.593	VLV	P
HPCIS	THPCI-2-075	2-073-001	2-ISI-0273-C-01	12	R1.11	R-A	96E-03	UT	N-UT-76	CS Alt Cal Block	10.00	0.593	P	EL
HPCIS	THPCI-2-107	2-073-002	ISI-0128-C-01	12	R1.11	R-A	96E-03	UT	N-UT-76	CS Alt Cal Block	10.00	0.593	EL	P
HPCIS	THPCI-2-109	2-073-002	ISI-0128-C-01	12	R1.11	R-A	96E-03	UT	N-UT-76	CS Alt Cal Block	10.00	0.593	EL	P
MSS	2-47B400S0039		2-ISI-0279-C-02	12	F1.10A	F-A	96E-03	VT-3	N-VT-1		26.00		RGD HGR	
MSS	GMS-2-24		2-ISI-0222-C-02	12	TS3432	B-J	B04-02	UT	N-UT-76	CS Alt Cal Block	26.00	0.950	P	TEE
MSS	GMS-2-32		2-ISI-0222-C-01	12	TS3432	B-J	B04-02	UT	N-UT-76	CS Alt Cal Block	26.00	0.950	P	EL
MSS	HPAS-2-H-02		2-ISI-0079-C-02	12	F1.20C	F-A	P95-96	VT-3	N-VT-1		06.00		VAR SUP	
MSS	HPAS-2-H-07		2-ISI-0079-C-02	12	F1.20C	F-A	P95-96	VT-3	N-VT-1		06.00		VAR SUP	
MSS	MS-2-H-14-IA		2-ISI-0079-C-01	12	C3.20	C-C	96E-03	MT	N-MT-6			1.500	WLD ATT	
MSS	MSBC-2-01		2-ISI-0312-B-01	12	B7.50	B-G-2	96E-03	VT-1	N-VT-1				BLTG	
MSS	MSBC-2-02		2-ISI-0312-B-01	12	B7.50	B-G-2	96E-03	VT-1	N-VT-1				BLTG	
MSS	MSBC-2-05		2-ISI-0312-B-01	12	B7.50	B-G-2	96E-03	VT-1	N-VT-1				BLTG	
MSS	MSBC-2-07		2-ISI-0312-B-01	12	B7.50	B-G-2	96E-03	VT-1	N-VT-1				BLTG	
RBCCW	2-47B464S0121		ISI-0032-C-01	12	F1.20A	F-A	96E-03	VT-3	N-VT-1		08.00		RGD HGR	
RBCCW	2-47B464S0228		ISI-0032-C-01	12	F1.20D	F-A	96E-03	VT-3	N-VT-1		08.00		SNBR	
RBCCW	2-47B464S0228-IA		ISI-0032-C-01	12	C3.20	C-C	96E-03	MT	N-MT-6			0.500	WLD ATT	
RCICS	2-47B456R0001-IA		2-ISI-0131-C-01	12	C3.20	C-C	96E-03	MT	N-MT-6			0.500	WLD ATT	
RCWS	1-47B451S0228		ISI-0391-C-01	12	F1.30A	F-A	96E-03	VT-3	N-VT-1		06.00		HRS	
RCWS	1-47B451S0356		ISI-0391-C-01	12	F1.30B	F-A	96E-03	VT-3	N-VT-1		06.00		RGD HGR	
RECIR	2-47B408S0044		2-ISI-0278-C-02	12	F1.40C	F-A	96E-03	VT-3	N-VT-1		12.00		CFS	
RECIR	2-47B408S0056		2-ISI-0278-C-01	12	F1.40C	F-A	96E-03	VT-3	N-VT-1		12.00		CFS	
RECIR	2RB5	2-068-012	2-ISI-0270-C-02	12	R1.16A	R-A	96E-03	UT	N-UT-64	SS Alt Cal Block	12.00	0.569	P	EL
RECIR	KR-2-24	2-068-014	2-ISI-0270-C-02	12	R1.16C	R-A	96E-03	UT	N-UT-64	SS Alt Cal Block	28.00	1.322	EL	P

SYSTEM	WELDNO	SEGMENT	ISONO	CYCLE	ITEMNO	CATEGORY	EXREQ	EXSCHD	NDEPROC	CALSTD	COMPDIA	NOMTHCK	COMPDESA	COMPDESB
RECIR	KR-2-24	2-068-014	2-ISI-0270-C-02	12	NU0313	C	B02-02	UT	N-UT-64	SS Alt Cal Block	28.00	1.322	EL	P
RECIR	KR-2-25	2-068-014	2-ISI-0270-C-02	12	R1.16C	R-A	96E-03	UT	N-UT-64	SS Alt Cal Block	28.00	1.322	P	TEE
RECIR	KR-2-25	2-068-014	2-ISI-0270-C-02	12	NU0313	C	B02-02	UT	N-UT-64	SS Alt Cal Block	28.00	1.322	P	TEE
RECIR	KR-2-45	2-068-001	2-ISI-0270-C-01	12	R1.16C	R-A	96E-03	UT	N-UT-64	SS Alt Cal Block	28.00	1.138	P	EL
RECIR	KR-2-45	2-068-001	2-ISI-0270-C-01	12	NU0313	C	B02-02	UT	N-UT-64	SS Alt Cal Block	28.00	1.138	P	EL
RECIR	RBC-2-1		2-ISI-0270-C-01	12	B7.50	B-G-2	96E-03	VT-1	N-VT-1				BLTG	
RHRS	2-47B452S0227-IA		2-ISI-0276-C-01	12	B10.20	B-K	96E-03	PT	N-PT-9			0.500	WLD ATT	
RHRS	DRHR-2-03B	2-074-005	2-ISI-0221-C-01	12	R1.16G	R-A	96E-03	VT-2	N-VT-4		24.00	1.219	P	P
RHRS	DRHR-2-03B	2-074-005	2-ISI-0221-C-01	12	NU0313	G	B02-02	VT-2	N-VT-4		24.00	1.219	P	P
RHRS	DRHR-2-13B	2-074-013	2-ISI-0221-C-01	12	R1.16G	R-A	96E-03	VT-2	N-VT-4		24.00	1.219	P	P
RHRS	DRHR-2-13B	2-074-013	2-ISI-0221-C-01	12	NU0313	G	B02-02	VT-2	N-VT-4		24.00	1.219	P	P
RHRS	DSRHR-2-07		2-ISI-0221-C-01	12	NU0313	C	B02-02	UT	N-UT-64	SS Alt Cal Block	24.00	1.219	P	EL
RHRS	DSRHR-2-07		2-ISI-0221-C-01	12	TS3432	B-J	B04-02	UT	N-UT-64	SS Alt Cal Block	24.00	1.219	P	EL
RHRS	FCV-74-54		2-ISI-0221-C-01	12	B12.50	B-M-2	96E-03	VT-3	N-VT-1		24.00		INT	
RHRS	FCV-74-67		2-ISI-0221-C-01	12	B12.50	B-M-2	96E-03	VT-3	N-VT-1		24.00		INT	
RHRS	RHR-2-R-95		2-ISI-0324-C-09	12	F1.20D	F-A	96E-03	VT-3	N-VT-1		24.00		SNBR	
RHRS	RHRG-2-05-A		2-ISI-0406-C-01	12	C2.33	C-B	96E-03	VT-2	N-VT-4		10.50	0.875	NOZ	
RHRS	RHRG-2-06-A		2-ISI-0406-C-01	12	C2.33	C-B	96E-03	VT-2	N-VT-4		10.50	0.875	NOZ	
RHRS	RHRG-2-07-A		2-ISI-0406-C-01	12	C1.10	C-A	96E-03	UT	N-UT-18	BF-26	54"	0.875	SHL	FLG
RHRS	RHRG-2-11-A		2-ISI-0406-C-01	12	C2.21	C-B	96E-03	MT	N-MT-6		10.00	0.875	NOZ	HD
RHRS	RHRG-2-11-A		2-ISI-0406-C-01	12	C2.21	C-B	96E-03	UT	N-UT-18	BF-32	10.00	0.875	NOZ	HD
RHRS	RHRG-2-13-A		2-ISI-0406-C-01	12	F1.40B	F-A	S01-03	VT-3	N-VT-1				HVES	
RHRS	RHRG-2-14-D		2-ISI-0406-C-01	12	F1.40B	F-A	S01-03	VT-3	N-VT-1				HVES	
RHRSW	2-17B300S0091		2-ISI-0145-C-01	12	F1.30A	F-A	96E-03	VT-3	N-VT-1		16.00		RGD HGR	
RHRSW	2-47B450H0043-IA		2-ISI-0145-C-02	12	D1.20	D-A	96E-03	VT-1	N-VT-1			0.625	WLD ATT	
RHRSW	2-47B450R0028		2-ISI-0145-C-02	12	F1.30A	F-A	96E-03	VT-3	N-VT-1		12.00		RGD STRT	
RPV	N-16A-SE		2-ISI-0383-C-01	12	NU0313	SIL571	B07-02	UT	N-UT-64	SS Alt Cal Block	2.00	0.218	NOZ	SE
RPV	N-16B-SE		2-ISI-0383-C-02	12	NU0313	SIL571	B07-02	UT	N-UT-64	SS Alt Cal Block	2.00	0.250	NOZ	SE
RPV	N1A		2-CHM-2046-C-01	12	B3.90	B-D	96E-03	UT	N-UT-78	BF-18	28.00	6.600	SHL	NOZ
RPV	N1A-IR		2-CHM-2046-C-01	12	B3.100	B-D	96E-03	VT-1E	N-VT-1		28.00	6.600	NOZ IR	
RPV	N2B		2-CHM-2046-C-01	12	B3.90	B-D	96E-03	UT	N-UT-78	BF-18	12.00	6.600	NOZ	SHL
RPV	N2B-IR		2-CHM-2046-C-01	12	B3.100	B-D	96E-03	VT-1E	N-VT-1		12.00	6.600	NOZ IR	
RPV	N2F		2-CHM-2046-C-01	12	B3.90	B-D	96E-03	UT	N-UT-78	BF-18	12.00	6.6	NOZ	SHL

SYSTEM	WELDNO	SEGMENT	ISONO	CYCLE	ITEMNO	CATEGORY	EXREQ	EXSCHD	NDEPROC	CALSTD	COMPDIA	NOMTHCK	COMPDESA	COMPDESB
RPV	N2F-IR		2-CHM-2046-C-01	12	B3.100	B-D	96E-03	VT-1E	N-VT-1		12.00	6.600	NOZ IR	
RPV	N2J		2-CHM-2046-C-01	12	B3.90	B-D	96E-03	UT	N-UT-78	BF-18	12.00	6.600	NOZ	SHL
RPV	N2J-IR		2-CHM-2046-C-01	12	B3.100	B-D	96E-03	VT-1E	N-VT-1		12.00	6.600	NOZ IR	
RPV	N3D		2-CHM-2046-C-01	12	B3.90	B-D	96E-03	UT	N-UT-78	BF-18	26.00	6.600	NOZ	SHL
RPV	N3D-IR		2-CHM-2046-C-01	12	B3.100	B-D	96E-03	VT-1E	N-VT-1		26.00	6.600	NOZ IR	
RPV	N4A		2-CHM-2046-C-01	12	B3.90	B-D	96E-03	UT	VENDOR UT		12.00	6.600	NOZ	SHL
RPV	N4A-FW-SPARG		2-CHM-2046-C-02	12	N/A	NU0619	B01-02	VT-1	VENDOR VT					
RPV	N4A-IR		2-CHM-2046-C-01	12	B3.100	B-D	96E-03	UT	VENDOR UT		12.00	6.600	NOZ IR	
RPV	N4A-IR/NB		2-ISI-0277-C-01	12	NU0619	B-D	B01-02	UT	VENDOR UT				NOZ IR	NOZ BR
RPV	N4B		2-CHM-2046-C-01	12	B3.90	B-D	96E-03	UT	VENDOR UT		12.00	6.600	NOZ	SHL
RPV	N4B-FW-SPARG		2-CHM-2046-C-02	12	N/A	NU0619	B01-02	VT-1	VENDOR VT					
RPV	N4B-IR		2-CHM-2046-C-01	12	B3.100	B-D	96E-03	UT	VENDOR UT		12.00	6.600	NOZ IR	
RPV	N4B-IR/NB		2-ISI-0277-C-01	12	NU0619	B-D	B01-02	UT	VENDOR UT				NOZ IR	NOZ BR
RPV	N4C		2-CHM-2046-C-01	12	B3.90	B-D	96E-03	UT	VENDOR UT		12.00	6.600	NOZ	SHL
RPV	N4C-FW-SPARG		2-CHM-2046-C-02	12	N/A	NU0619	B01-02	VT-1	VENDOR VT					
RPV	N4C-IR		2-CHM-2046-C-01	12	B3.100	B-D	96E-03	UT	VENDOR UT		12.00	6.600	NOZ IR	
RPV	N4C-IR/NB		2-ISI-0277-C-01	12	NU0619	B-D	B01-02	UT	VENDOR UT				NOZ IR	NOZ IR
RPV	N4D		2-CHM-2046-C-01	12	B3.90	B-D	96E-03	UT	VENDOR UT		12.00	6.600	NOZ	SHL
RPV	N4D-FW-SPARG		2-CHM-2046-C-02	12	N/A	NU0619	B01-02	VT-1	VENDOR VT					
RPV	N4D-IR		2-CHM-2046-C-01	12	B3.100	B-D	96E-03	UT	VENDOR UT		12.00	6.600	NOZ IR	
RPV	N4D-IR/NB		2-ISI-0277-C-01	12	NU0619	B-D	B01-02	UT	VENDOR UT				NOZ IR	NOZ BR
RPV	N4E		2-CHM-2046-C-01	12	B3.90	B-D	96E-03	UT	VENDOR UT		12.00	6.600	NOZ	SHL
RPV	N4E-FW-SPARG		2-CHM-2046-C-02	12	N/A	NU0619	B01-02	VT-1	VENDOR VT					
RPV	N4E-IR		2-CHM-2046-C-01	12	B3.100	B-D	96E-03	UT	VENDOR UT		12.00	6.600	NOZ IR	
RPV	N4E-IR/NB		2-ISI-0277-C-01	12	NU0619	B-D	B01-02	UT	VENDOR UT				NOZ IR	NOZ BR
RPV	N4F		2-CHM-2046-C-01	12	B3.90	B-D	96E-03	UT	VENDOR UT		12.00	6.600	NOZ	SHL
RPV	N4F-FW-SPARG		2-CHM-2046-C-02	12	N/A	NU0619	B01-02	VT-1	VENDOR VT					
RPV	N4F-IR		2-CHM-2046-C-01	12	B3.100	B-D	96E-03	UT	VENDOR UT		12.00	6.600	NOZ IR	
RPV	N4F-IR/NB		2-ISI-0277-C-01	12	NU0619	B-D	B01-02	UT	VENDOR UT				NOZ IR	NOZ BR
RPV	N5A		2-CHM-2046-C-01	12	B3.90	B-D	96E-03	UT	N-UT-78	BF-18	10.00	6.6	NOZ	SHL
RPV	N5A-IR		2-CHM-2046-C-01	12	B3.100	B-D	96E-03	VT-1E	N-VT-1		10.00	6.600	NOZ IR	
RPV	N6A-IR		ISI-0408-C-01	12	B3.100	B-D	96E-03	VT-1E	N-VT-1		06.00	4.340	NOZ IR	
RPV	N6A-NV		ISI-0408-C-01	12	B3.90	B-D	96E-03	UT	N-UT-78	BF-19&BF-18	6.00	4.340	NOZ	CL HD
RPV	N8A		2-CHM-2046-C-01	12	B3.90	B-D	96E-03	UT	N-UT-78	BF-18	04.06	6.600	NOZ	SHL
RPV	N8A-IR		2-CHM-2046-C-01	12	B3.100	B-D	96E-03	VT-1E	N-VT-1		04.06	6.600	NOZ IR	
RPV	RCH-2-1C		ISI-0408-C-01	12	B1.21	B-A	96E-03	UT	N-UT-78	BF-19	~145	4.000	CH CS	
RPV	RCH-2-1V		ISI-0408-C-01	12	B1.22	B-A	96E-03	UT	N-UT-78	BF-19	~96L	4.000	VERT LS	
RPV	RCH-2-2V		ISI-0408-C-01	12	B1.22	B-A	96E-03	UT	N-UT-78	BF-19	~96L	4.000	VERT LS	
RPV	RPV-INTERIOR		2-CHM-2046-C-02	12	B13.10	B-N-1	96E-03	VT-3	VENDOR VT				INT	

SYSTEM	WELDNO	SEGMENT	ISONO	CYCLE	ITEMNO	CATEGORY	EXREQ	EXSCHD	NDEPROC	CALSTD	COMPDIA	NOMTHCK	COMPDESA	COMPDESB
RPV	RPV-NUTS-2-01		ISI-0266-C-01	12	B6.10	B-G-1	96E-03	VT-1	N-VT-1		08.50		CL HD BLT	
RPV	RPV-NUTS-2-02		ISI-0266-C-01	12	B6.10	B-G-1	96E-03	VT-1	N-VT-1		08.50		CL HD BLT	
RPV	RPV-NUTS-2-03		ISI-0266-C-01	12	B6.10	B-G-1	96E-03	VT-1	N-VT-1		08.50		CL HD BLT	
RPV	RPV-NUTS-2-04		ISI-0266-C-01	12	B6.10	B-G-1	96E-03	VT-1	N-VT-1		08.50		CL HD BLT	
RPV	RPV-NUTS-2-05		ISI-0266-C-01	12	B6.10	B-G-1	96E-03	VT-1	N-VT-1		08.50		CL HD BLT	
RPV	RPV-NUTS-2-06		ISI-0266-C-01	12	B6.10	B-G-1	96E-03	VT-1	N-VT-1		08.50		CL HD BLT	
RPV	RPV-NUTS-2-07		ISI-0266-C-01	12	B6.10	B-G-1	96E-03	VT-1	N-VT-1		08.50		CL HD BLT	
RPV	RPV-NUTS-2-08		ISI-0266-C-01	12	B6.10	B-G-1	96E-03	VT-1	N-VT-1		08.50		CL HD BLT	
RPV	RPV-NUTS-2-09		ISI-0266-C-01	12	B6.10	B-G-1	96E-03	VT-1	N-VT-1		08.50		CL HD BLT	
RPV	RPV-NUTS-2-10		ISI-0266-C-01	12	B6.10	B-G-1	96E-03	VT-1	N-VT-1		08.50		CL HD BLT	
RPV	RPV-NUTS-2-11		ISI-0266-C-01	12	B6.10	B-G-1	96E-03	VT-1	N-VT-1		08.50		CL HD BLT	
RPV	RPV-NUTS-2-12		ISI-0266-C-01	12	B6.10	B-G-1	96E-03	VT-1	N-VT-1		08.50		CL HD BLT	
RPV	RPV-NUTS-2-13		ISI-0266-C-01	12	B6.10	B-G-1	96E-03	VT-1	N-VT-1		08.50		CL HD BLT	
RPV	RPV-NUTS-2-14		ISI-0266-C-01	12	B6.10	B-G-1	96E-03	VT-1	N-VT-1		08.50		CL HD BLT	
RPV	RPV-NUTS-2-15		ISI-0266-C-01	12	B6.10	B-G-1	96E-03	VT-1	N-VT-1		08.50		CL HD BLT	
RPV	RPV-NUTS-2-16		ISI-0266-C-01	12	B6.10	B-G-1	96E-03	VT-1	N-VT-1		08.50		CL HD BLT	
RPV	RPV-NUTS-2-17		ISI-0266-C-01	12	B6.10	B-G-1	96E-03	VT-1	N-VT-1		08.50		CL HD BLT	
RPV	RPV-NUTS-2-18		ISI-0266-C-01	12	B6.10	B-G-1	96E-03	VT-1	N-VT-1		08.50		CL HD BLT	
RPV	RPV-NUTS-2-19		ISI-0266-C-01	12	B6.10	B-G-1	96E-03	VT-1	N-VT-1		08.50		CL HD BLT	
RPV	RPV-NUTS-2-20		ISI-0266-C-01	12	B6.10	B-G-1	96E-03	VT-1	N-VT-1		08.50		CL HD BLT	
RPV	RPV-NUTS-2-21		ISI-0266-C-01	12	B6.10	B-G-1	96E-03	VT-1	N-VT-1		08.50		CL HD BLT	
RPV	RPV-NUTS-2-22		ISI-0266-C-01	12	B6.10	B-G-1	96E-03	VT-1	N-VT-1		08.50		CL HD BLT	
RPV	RPV-NUTS-2-23		ISI-0266-C-01	12	B6.10	B-G-1	96E-03	VT-1	N-VT-1		08.50		CL HD BLT	
RPV	RPV-NUTS-2-24		ISI-0266-C-01	12	B6.10	B-G-1	96E-03	VT-1	N-VT-1		08.50		CL HD BLT	
RPV	RPV-NUTS-2-25		ISI-0266-C-01	12	B6.10	B-G-1	96E-03	VT-1	N-VT-1		08.50		CL HD BLT	
RPV	RPV-NUTS-2-26		ISI-0266-C-01	12	B6.10	B-G-1	96E-03	VT-1	N-VT-1		08.50		CL HD BLT	
RPV	RPV-NUTS-2-27		ISI-0266-C-01	12	B6.10	B-G-1	96E-03	VT-1	N-VT-1		08.50		CL HD BLT	
RPV	RPV-NUTS-2-28		ISI-0266-C-01	12	B6.10	B-G-1	96E-03	VT-1	N-VT-1		08.50		CL HD BLT	
RPV	RPV-NUTS-2-29		ISI-0266-C-01	12	B6.10	B-G-1	96E-03	VT-1	N-VT-1		08.50		CL HD BLT	
RPV	RPV-NUTS-2-30		ISI-0266-C-01	12	B6.10	B-G-1	96E-03	VT-1	N-VT-1		08.50		CL HD BLT	
RPV	RPV-STAB-2-1		ISI-0415-C-01	12	F1.40C	F-A	96E-03	VT-3	N-VT-1				STAB	
RPV	RPV-STAB-2-1A-IA		ISI-0415-C-01	12	B10.10	B-K	96E-03	PT	N-PT-9				WLD ATT	
RPV	RPV-STAB-2-1B-IA		ISI-0415-C-01	12	B10.10	B-K	96E-03	PT	N-PT-9				WLD ATT	
RPV	RPV-STAB-2-1C-IA		ISI-0415-C-01	12	B10.10	B-K	96E-03	PT	N-PT-9				WLD ATT	
RPV	RPV-STAB-2-1D-IA		ISI-0415-C-01	12	B10.10	B-K	96E-03	PT	N-PT-9				WLD ATT	
RPV	RPV-STAB-2-1E-IA		ISI-0415-C-01	12	B10.10	B-K	96E-03	PT	N-PT-9				WLD ATT	
RPV	RPV-STAB-2-1F-IA		ISI-0415-C-01	12	B10.10	B-K	96E-03	PT	N-PT-9				WLD ATT	
RPV	RPV-STAB-2-1G-IA		ISI-0415-C-01	12	B10.10	B-K	96E-03	PT	N-PT-9				WLD ATT	
RPV	RPV-STAB-2-1H-IA		ISI-0415-C-01	12	B10.10	B-K	96E-03	PT	N-PT-9				WLD ATT	
RPV	RPV-WASH-2-01		ISI-0266-C-01	12	B6.50	B-G-1	96E-03	VT-1	N-VT-1		06.00	08.62	WASH	

SYSTEM	WELDNO	SEGMENT	ISONO	CYCLE	ITEMNO	CATEGORY	EXREQ	EXSCHD	NDEPROC	CALSTD	COMPDIA	NOMTHCK	COMPDESA	COMPDESB
RPV	RPV-WASH-2-02		ISI-0266-C-01	12	B6.50	B-G-1	96E-03	VT-1	N-VT-1		06.00	08.62	WASH	
RPV	RPV-WASH-2-03		ISI-0266-C-01	12	B6.50	B-G-1	96E-03	VT-1	N-VT-1		06.00	08.62	WASH	
RPV	RPV-WASH-2-04		ISI-0266-C-01	12	B6.50	B-G-1	96E-03	VT-1	N-VT-1		06.00	08.62	WASH	
RPV	RPV-WASH-2-05		ISI-0266-C-01	12	B6.50	B-G-1	96E-03	VT-1	N-VT-1		06.00	08.62	WASH	
RPV	RPV-WASH-2-06		ISI-0266-C-01	12	B6.50	B-G-1	96E-03	VT-1	N-VT-1		06.00	08.62	WASH	
RPV	RPV-WASH-2-07		ISI-0266-C-01	12	B6.50	B-G-1	96E-03	VT-1	N-VT-1		06.00	08.62	WASH	
RPV	RPV-WASH-2-08		ISI-0266-C-01	12	B6.50	B-G-1	96E-03	VT-1	N-VT-1		06.00	08.62	WASH	
RPV	RPV-WASH-2-09		ISI-0266-C-01	12	B6.50	B-G-1	96E-03	VT-1	N-VT-1		06.00	08.62	WASH	
RPV	RPV-WASH-2-10		ISI-0266-C-01	12	B6.50	B-G-1	96E-03	VT-1	N-VT-1		06.00	08.62	WASH	
RPV	RPV-WASH-2-11		ISI-0266-C-01	12	B6.50	B-G-1	96E-03	VT-1	N-VT-1		06.00	08.62	WASH	
RPV	RPV-WASH-2-12		ISI-0266-C-01	12	B6.50	B-G-1	96E-03	VT-1	N-VT-1		06.00	08.62	WASH	
RPV	RPV-WASH-2-13		ISI-0266-C-01	12	B6.50	B-G-1	96E-03	VT-1	N-VT-1		06.00	08.62	WASH	
RPV	RPV-WASH-2-14		ISI-0266-C-01	12	B6.50	B-G-1	96E-03	VT-1	N-VT-1		06.00	08.62	WASH	
RPV	RPV-WASH-2-15		ISI-0266-C-01	12	B6.50	B-G-1	96E-03	VT-1	N-VT-1		06.00	08.62	WASH	
RPV	RPV-WASH-2-16		ISI-0266-C-01	12	B6.50	B-G-1	96E-03	VT-1	N-VT-1		06.00	08.62	WASH	
RPV	RPV-WASH-2-17		ISI-0266-C-01	12	B6.50	B-G-1	96E-03	VT-1	N-VT-1		06.00	08.62	WASH	
RPV	RPV-WASH-2-18		ISI-0266-C-01	12	B6.50	B-G-1	96E-03	VT-1	N-VT-1		06.00	08.62	WASH	
RPV	RPV-WASH-2-19		ISI-0266-C-01	12	B6.50	B-G-1	96E-03	VT-1	N-VT-1		06.00	08.62	WASH	
RPV	RPV-WASH-2-20		ISI-0266-C-01	12	B6.50	B-G-1	96E-03	VT-1	N-VT-1		06.00	08.62	WASH	
RPV	RPV-WASH-2-21		ISI-0266-C-01	12	B6.50	B-G-1	96E-03	VT-1	N-VT-1		06.00	08.62	WASH	
RPV	RPV-WASH-2-22		ISI-0266-C-01	12	B6.50	B-G-1	96E-03	VT-1	N-VT-1		06.00	08.62	WASH	
RPV	RPV-WASH-2-23		ISI-0266-C-01	12	B6.50	B-G-1	96E-03	VT-1	N-VT-1		06.00	08.62	WASH	
RPV	RPV-WASH-2-24		ISI-0266-C-01	12	B6.50	B-G-1	96E-03	VT-1	N-VT-1		06.00	08.62	WASH	
RPV	RPV-WASH-2-25		ISI-0266-C-01	12	B6.50	B-G-1	96E-03	VT-1	N-VT-1		06.00	08.62	WASH	
RPV	RPV-WASH-2-26		ISI-0266-C-01	12	B6.50	B-G-1	96E-03	VT-1	N-VT-1		06.00	08.62	WASH	
RPV	RPV-WASH-2-27		ISI-0266-C-01	12	B6.50	B-G-1	96E-03	VT-1	N-VT-1		06.00	08.62	WASH	
RPV	RPV-WASH-2-28		ISI-0266-C-01	12	B6.50	B-G-1	96E-03	VT-1	N-VT-1		06.00	08.62	WASH	
RPV	RPV-WASH-2-29		ISI-0266-C-01	12	B6.50	B-G-1	96E-03	VT-1	N-VT-1		06.00	08.62	WASH	
RPV	RPV-WASH-2-30		ISI-0266-C-01	12	B6.50	B-G-1	96E-03	VT-1	N-VT-1		06.00	08.62	WASH	
RWCUS	DSRWC-2-06	2-069-001	2-ISI-0272-C-01	12	NU0313	C	B02-02	UT	N-UT-64	SS Alt Cal Block	06.00	0.432	EL	P
RWCUS	DSRWC-2-06	2-069-001	2-ISI-0272-C-01	12	TS3432	B-J	B04-02	UT	N-UT-64	SS Alt Cal Block	06.00	0.432	EL	P
RWCUS	FCV-69-001		2-ISI-0272-C-01	12	B12.50	B-M-2	96E-03	VT-3	N-VT-1		06.00		INT	
RWCUS	RWCU-2-003-G003	2-069-002	2-ISI-0272-C-01	12	R1.16A	R-A	96E-03	UT	N-UT-64	SS Alt Cal Block	6.00	0.432	PEN	P

SCAN PLAN R[illegible]ON LOG

Unit/ Cycle	Scan Plan Rev	System	Component/Identifier	ASME XI	Revision	Reason for Revision	Approved by ISI/NDE Sign & Date	Approved by NDE Level III Sign & Date	Database Revised by ISO Sign & Date	Da[illegible]se Revision Verified by ISI/NDE Sign & Date
2/C12	1	RPV	N10-SE, N11A-SE, N 11B-SE, N12A-SE N 12B-SE, N16A-SE AND N16B-SE	1	ADD RPV NOZZLE SAFE ENDS As Follows N 10-SE, N11A-SE N 11B-SE, N12A-SE N 12B-SE, N16A-SE, AND N16B-SE	VT2 Augmented exam per 2SE-4.6.6-R/19 para 7.11.10 & GE-SIL 572.	1/13/03	1/13/03	1/14/03	3/8/03
2/C12	1	RHR 074	RHRG-2-11-A	2	Delete MT/UT EXAMS of RHRG-2-11-A	Does not meet Requirements for exam per TABLE IWC-2500-1 code cat CB item C2.21 notes 1+2 in table	1/29/03	1/29/03	1/29/03	2/4/03
2/C12	1	CRD 85	2-47B46850007	2	Delete Support 2-47B46850007	ADDED support 2-47B46850001 AS a SUBSTITUTE to SAVE RAD DOSE	1/29/03	1/29/03	1/29/03	3/4/03
2/C12	1	CRD 85	2-47B46850001, 2-47B46850001-1A	2	ADD VT3 AND MT to 1A	ADDED these components as a substitute for 2-47B46850007 AND 2-47B46850018-1A to SAVE RAD DOSE. Component 2-47B46850018-1A will remain a contingent exam if it can be worked into the outage schedule	1/29/03	1/29/03	1/29/03	3/8/03

SCAN PLAN R... ...ON LOG

Unit/ Cycle	Scan Plan Rev	System	Component/Identifier	ASME XI	Revision	Reason for Revision	Approved by ISI/NDE Sign & Date	Approved by NDE Level III Sign & Date	Database Revised by ISO Sign & Date	Database Revision Verified by ISI/NDE Sign & Date
2/12	1	CRD	2-47B468-S008-1A	2	Delete MT of 2-47B468S008-1A	Substituted 2-47B468S008-1A For plane reasons.	[illegible] 3/21/03	[illegible] 3.21.03	[illegible] 3.21.03	[illegible] 3/21/03
~~2/13~~ 2/12	1 ~~2~~ 3/17/03	RHR	FCV-74-47	1	Added valve FCV 74-47 B-M-2	Valve was dissassembled allow access for inspection	[illegible] 4/1/03	[illegible] 3.3.03	[illegible] 3.3.03	[illegible] 3/3/03
~~2/12~~	1	FW	FCV-3-568	1	Add Valve FCV-3-568 B-M-2 B12.50	Valve was DISASSEMBLED DURING U2C12 MID-cycle outage		VOID [illegible] 4/1/03	[illegible]	
2/12	1	FW	FCV-3-568-BC	1	Add Valve Bolting 2-FCV-3-568-BC B-G-2 B7.70	Valve was DISASSEMBLED DURING U2C12 MID cycle outage	[illegible] 4/1/03	[illegible] 4.1.03	[illegible] 4/1/03	[illegible] 4.1.03

2 [illegible] 3/31/03

3 [illegible] 3/25/03

[illegible] 3/14/03

SCAN PLAN R[illegible]ON LOG

Unit/ Cycle	Scan Plan Rev	System	Component/Identifier	ASME XI	Revision	Reason for Revision	Approved by ISI/NDE Sign & Date	Approved by NDE Level III Sign & Date	Database Revised by ISO Sign & Date	Database Revision Verified by ISI/NDE Sign & Date
2/C12	01	HPCI/073 RHR/074 RWCU/069 CS/070	FCV-73-03 FCV-74-54 FCV-74-67 FCV-69-01 FCV-75-26 B-M-2 B12.50	1	Remove Valves From Scan Plan FCV-73-03 FCV-74-54 FCV-74-67 FCV-69-01 FCV-75-26	Valves NOT opened in U2C12 Outage	[illegible] 4/1/03	[illegible] 4/1/03	[illegible] 4/1/03	[illegible] 4/1/03
2/C12	01	RPV/329	N16A-SE N16B-SE	1	Remove UT of N16A-SE & N16B-SE From Scan Plan	Not Required BWRVIP-49 Does NOT Require UT (Augmented exam)	[illegible] 4/1/03	[illegible] 4/1/03	[illegible] 4/1/03	[illegible] 4/1/03
2/C12	01	RPV/329	N5A N5A-IR	1	Delete UT and EVT-1 exam From Scan Plan	Deffered to cycle 13 FOR ALARA/DOSE Considerations	[illegible] 4/1/03	[illegible] 4/1/03	[illegible] 4/1/03	[illegible] 4/1/03

3 → 4 [illegible] 3/25/03

[illegible] 3/27/03

March 31, 2003

Albert Ladd, ANI/ANII, PEC-1C, BFN

BROWNS FERRY NUCLEAR PLANT (BFN) - UNIT 2 CYCLE 12 REFUELING OUTAGE INSERVICE INSPECTION (ISI) SCAN PLAN, REVISION 1.

Attached for your review is the BFN Unit 2 Cycle 12 refueling outage ISI Scan Plan, Revision 1. The examinations are scheduled to be performed during the Unit 2 outage by BFN Site Engineering/Component Engineering. The examinations are performed to satisfy the requirements of ASME Code Section XI, 1995 Edition, 1996 Addenda.

This document was prepared by Hal Hodges of BFN Component Engineering and coordinated with Fred Froscello and Darlene Tinley of TVAN Inspection Services.

4-1-03

Harold E. Hodges
BFN Component Engineering

4/10/03 3/31/03

Frederick W. Froscello
ISO, ISI/NDE, Supervisor, BFN

3/31/03

Darlene Tinley
ISO, NDE Level III

03/31/2003

Kevin Groom
BFN Mechanical Design
Engineering FAC Concurrence

4/10/03

Albert Ladd, ANI/ANII
Concurrence

cc: R. L. Golub, PEC-1C, BFN
M. L. Turnbow, STC-1I,

Revision 001
04/11/2003
Total Examinations: 308

TENNESSEE VALLEY AUTHORITY
BROWNS FERRY NUCLEAR POWER PLANT - UNIT 2
EXAMS SCHEDULED FOR CYCLE 12

SYSTEM	WELDNO	SEGMENT	ISONO	CYCLE	ITEMNO	CATEGORY	EXREQ	EXSCHD	NDEPROC	CALSTD	COMPDIA	NOMTHCK	COMPDESA	COMPDESB
CRDS	2-47B468S0001		2-ISI-0041-C-02	12	F1.20B	F-A	96E-03	VT-3	N-VT-1		06.00		CAP	
CRDS	2-47B468S0001-IA		2-ISI-0041-C-02	12	C3.20	C-C	96E-03	MT	N-MT-6			0.500	WLD ATT	
CRDS	2-47B468S0006		2-ISI-0041-C-01	12	F1.20B	F-A	96E-03	VT-3	N-VT-1		06.00		RGD HGR	
CRDS	2-47B468S0012		2-ISI-0041-C-01	12	F1.20A	F-A	96E-03	VT-3	N-VT-1		06.00		RGD STRT	HRS
CRDS	2-47B468S0016		2-ISI-0041-C-02	12	F1.40B	F-A	96E-03	VT-3	N-VT-1		12.00		RGD HGR	
CRDS	2-47B468S0017		2-ISI-0041-C-02	12	F1.40B	F-A	96E-03	VT-3	N-VT-1		12.00		RGD SUP	
CRDS	2-47B468S0018		2-ISI-0041-C-02	12	F1.40B	F-A	96E-03	VT-3	N-VT-1		12.00		VSL SUP	
CRDS	2-47B468S0040		2-ISI-0041-C-01	12	F1.20A	F-A	96E-03	VT-3	N-VT-1		06.00		RGD HGR	
CRDS	2-SI-3.3.1.D		N/A	12	C7.30	C-H	96E-03	VT-2	N-VT-4				E-LEAK	
CRDS	2-SI-3.3.1.D		N/A	12	C7.70	C-H	96E-03	VT-2	N-VT-4				E-LEAK	
CRDS	2-SI-3.3.7		N/A	12	C7.10	C-H	96E-03	VT-2	N-VT-4				HYDRO	
CRDS	2-SI-3.3.7		N/A	12	C7.30	C-H	96E-03	VT-2	N-VT-4				HYDRO	
CRDS	2-SI-3.3.7		N/A	12	C7.70	C-H	96E-03	VT-2	N-VT-4				HYDRO	
CSS	2-47B458S0004		2-ISI-0280-C-01	12	F1.10D	F-A	96E-03	VT-3	N-VT-1		12.00		SNBR	
CSS	2-47B458S0007		2-ISI-0280-C-01	12	F1.10D	F-A	96E-03	VT-3	N-VT-1		12.00		SNBR	
CSS	2-47B458S0010		2-ISI-0280-C-01	12	F1.10C	F-A	96E-03	VT-3	N-VT-1		12.00		VAR SUP	
CSS	CS-2-H-1		2-ISI-0105-C-02	12	F1.20A	F-A	96E-03	VT-3	N-VT-1		12.00		RGD HGR	
CSS	CS-2-H-11		2-ISI-0105-C-02	12	F1.20C	F-A	96E-03	VT-3	N-VT-1		12.00		VAR SUP	
CSS	CS-2-H-11-IA		2-ISI-0105-C-02	12	C3.20	C-C	96E-03	MT	N-MT-6			0.750	WLD ATT	
CSS	CS-2-H-2		2-ISI-0105-C-02	12	F1.20C	F-A	96E-03	VT-3	N-VT-1		14.00		VAR SUP	
CSS	CS-2-H-21		2-ISI-0105-C-01	12	F1.20A	F-A	96E-03	VT-3	N-VT-1		14.00		RGD SUP	
CSS	CS-2-H-7		2-ISI-0105-C-02	12	F1.20C	F-A	96E-03	VT-3	N-VT-1		14.00		VAR SUP	
CSS	CS-2-H-7-IA		2-ISI-0105-C-02	12	C3.20	C-C	96E-03	MT	N-MT-6			1.000	WLD ATT	
CSS	CS-2-PS-01		2-ISI-0105-C-01	12	F1.40B	F-A	96E-03	VT-3	N-VT-1				PMP SUP	
CSS	CS-48N1025-2-B		2-ISI-0105-C-02	12	F1.20B	F-A	96E-03	VT-3	N-VT-1		16.00		RGD ANCH	
CSS	DCS-2-07	2-075-001	2-ISI-0271-C-01	12	R1.16C	R-A	96E-03	UT	N-UT-64	WB-83	12.00	0.687	P	EL
CSS	DCS-2-07	2-075-001	2-ISI-0271-C-01	12	NU0313	C	B02-02	UT	N-UT-64	WB-83	12.00	0.687	P	EL
CSS	DCS-2-13A	2-075-001	2-ISI-0271-C-01	12	R1.16C	R-A	96E-03	UT	N-UT-64	WB-83	12.00	0.687	P	P
CSS	DCS-2-13A	2-075-001	2-ISI-0271-C-01	12	NU0313	C	B02-02	UT	N-UT-64	WB-83	12.00	0.687	P	P
CSS	DSCS-2-01	2-075-002	2-ISI-0271-C-01	12	R1.16C	R-A	96E-03	UT	N-UT-64	WB-83	12.00	0.687	P	EL
CSS	DSCS-2-01	2-075-002	2-ISI-0271-C-01	12	NU0313	C	B02-02	UT	N-UT-64	WB-83	12.00	0.687	P	EL
CSS	DSCS-2-02	2-075-002	2-ISI-0271-C-01	12	R1.16C	R-A	96E-03	UT	N-UT-64	WB-83	12.00	0.687	EL	P
CSS	DSCS-2-02	2-075-002	2-ISI-0271-C-01	12	NU0313	C	B02-02	UT	N-UT-64	WB-83	12.00	0.687	EL	P
CSS	TCS-2-407		2-ISI-0271-C-01	12	TS3432	B-J	B04-02	UT	N-UT-76	WB-79	12.75	0.687	EL	P
EECWS	0-37B205S0056-IA		ISI-0368-C-01	12	D1.20	D-A	96E-03	VT-1	N-VT-1			0.375	WLD ATT	

SYSTEM	WELDNO	SEGMENT	ISONO	CYCLE	ITEMNO	CATEGORY	EXREQ	EXSCHD	NDEPROC	CALSTD	COMPDIA	NOMTHCK	COMPDESA	COMPDESB
EECWS	1-47B451R0055-1A		ISI-0368-C-14	12	D1.20	D-A	96E-03	VT-1	N-VT-1			0.750	WLD ATT	
EECWS	2-SI-3.3.14A		N/A	12	D2.30	D-B	96E-03	VT-2	N-VT-4				HYDRO	
EECWS	2-SI-3.3.14A		N/A	12	D2.50	D-B	96E-03	VT-2	N-VT-4				HYDRO	
EECWS	2-SI-3.3.14A		N/A	12	D2.70	D-B	96E-03	VT-2	N-VT-4				HYDRO	
EECWS	2-SI-3.3.14B		N/A	12	D2.10	D-B	96E-03	VT-2	N-VT-4				HYDRO	
EECWS	2-SI-3.3.14B		N/A	12	D2.30	D-B	96E-03	VT-2	N-VT-4				HYDRO	
EECWS	2-SI-3.3.14B		N/A	12	D2.50	D-B	96E-03	VT-2	N-VT-4				HYDRO	
EECWS	2-SI-3.3.14B		N/A	12	D2.70	D-B	96E-03	VT-2	N-VT-4				HYDRO	
EECWS	RHRSW-PMP-0-B1		ISI-0368-C-02	12	F1.40B	F-A	96E-03	VT-3	N-VT-1				PMP SUP	
EECWS	RHRSW-STR-0-A1		ISI-0368-C-01	12	F1.40B	F-A	96E-03	VT-3	N-VT-1				RGD HGR	
FPCS	2-SI-3.3.3		N/A	12	C7.30	C-H	96E-03	VT-2	N-VT-4				E-LEAK	
FPCS	2-SI-3.3.3		N/A	12	C7.70	C-H	96E-03	VT-2	N-VT-4				E-LEAK	
FWS	2-47B415H0001		2-ISI-0277-C-01	12	F1.40C	F-A	96E-03	VT-3	N-VT-1		20.00		VAR SUP	
FWS	2-47B415H0004		2-ISI-0277-C-01	12	F1.10C	F-A	96E-03	VT-3	N-VT-1		12.00		CFS	
FWS	2-47B415H0004-1A		2-ISI-0277-C-01	12	B10.20	B-K	96E-03	MT	N-MT-6			1.625	WLD ATT	
FWS	2-47B415H0005		2-ISI-0277-C-01	12	F1.10C	F-A	96E-03	VT-3	N-VT-1		20.00		VAR SUP	
FWS	2-47B415H0007		2-ISI-0277-C-01	12	F1.40C	F-A	96E-03	VT-3	N-VT-1		24.00		VAR SUP	
FWS	2-47B415H0010		2-ISI-0277-C-01	12	F1.10C	F-A	96E-03	VT-3	N-VT-1		20.00		CFS	
FWS	2-47B415H0010-1A		2-ISI-0277-C-01	12	B10.20	B-K	96E-03	MT.	N-MT-6			0.500	WLD ATT	
FWS	2-47B415S0002		2-ISI-0277-C-01	12	F1.10D	F-A	96E-03	VT-3	N-VT-1		12.00		SNBR	
FWS	2-47B415S0002-1A		2-ISI-0277-C-01	12	B10.20	B-K	96E-03	MT	N-MT-6			0.500	WLD ATT	
FWS	2-47B415S0005		2-ISI-0277-C-01	12	F1.10D	F-A	96E-03	VT-3	N-VT-1		12.00		SNBR	
FWS	2-47B415S0008		2-ISI-0277-C-01	12	F1.10D	F-A	96E-03	VT-3	N-VT-1		24.00		SNBR	
FWS	2-47B415S0009		2-ISI-0277-C-01	12	F1.10D	F-A	P95-96	VT-3	N-VT-1		24.00		SNBR	
FWS	2-47B415S0010		2-ISI-0277-C-01	12	F1.10D	F-A	96E-03	VT-3	N-VT-1		12.00		SNBR	
FWS	2-47B415S0014		2-ISI-0277-C-01	12	F1.10D	F-A	96E-03	VT-3	N-VT-1		12.00		SNBR	
FWS	2-47B415S0019		2-ISI-0277-C-01	12	F1.10D	F-A	96E-03	VT-3	N-VT-1		20.00		SNBR	
FWS	2-47B415S0025		2-ISI-0277-C-01	12	F1.10B	F-A	96E-03	VT-3	N-VT-1		24.00		RGD HGR	
FWS	2RFW1B-27E	2-003-041	2-ISI-0269-C-01	12	R1.18	R-A	96E-03	UT	N-UT-26	01-7472			EL	
FWS	2RFW1B-30P	2-003-042	2-ISI-0269-C-01	12	R1.18	R-A	96E-03	UT	N-UT-26	01-7473			P	
FWS	2RFW1B-39E	2-003-043	2-ISI-0269-C-01	12	R1.18	R-A	96E-03	UT	N-UT-26	01-7480			EL	
FWS	2RFW1B-44E	2-003-043	2-ISI-0269-C-01	12	R1.18	R-A	96E-03	UT	N-UT-26	01-7471			EL	
FWS	2RFW1B-6E	2-003-007	2-ISI-0269-C-01	12	R1.18	R-A	96E-03	UT	N-UT-26	01-7471			EL	
FWS	2RFW2A-13T	2-003-036	2-ISI-0269-C-01	12	R1.18	R-A	96E-03	UT	N-UT-26	01-7471			TEE	
FWS	2RFW2A-16T	2-003-036	2-ISI-0269-C-01	12	R1.18	R-A	96E-03	UT	N-UT-26	01-7473			TEE	
FWS	2RFW2A-27E	2-003-037	2-ISI-0269-C-01	12	R1.18	R-A	96E-03	UT	N-UT-26	01-7471			EL	
FWS	2RFW2A-39E	2-003-039	2-ISI-0269-C-01	12	R1.18	R-A	96E-03	UT	N-UT-26	01-7471			EL	
FWS	2RFW2A-45P	2-003-039	2-ISI-0269-C-01	12	R1.18	R-A	96E-03	UT	N-UT-26	01-7472			P	
FWS	3-568		2-ISI-0269-C-01	12	B12.50	B-M-2	96E-03	VT-3	N-VT-1		24.00		INT	
FWS	3-568-BC		2-ISI-0269-C-01	12	B7.70	B-G-2	96E-03	VT-1	N-VT-1				BLTG	

SYSTEM	WELDNO	SEGMENT	ISONO	CYCLE	ITEMNO	CATEGORY	EXREQ	EXSCHD	NDEPROC	CALSTD	COMPDIA	NOMTHCK	COMPDESA	COMPDESB
FWS	GFW-2-15		2-ISI-0269-C-01	12	TS3432	B-J	B04-02	UT	N-UT-76	WB-80	12.75	0.844	TEE	P
FWS	KFW-2-38		2-ISI-0269-C-01	12	TS3432	B-J	B04-02	UT	N-UT-76	WB-79	12.75	0.844	EL	P
FWS	KFW-2-39		2-ISI-0269-C-01	12	TS3432	B-J	B04-02	UT	N-UT-76	WB-80	12.75	0.844	P	EL
HPCIS	2-47B455H0048-IA		ISI-0275-C-01	12	B10.20	B-K	96E-03	MT	N-MT-6			0.237	WLD ATT	
HPCIS	2-47B455H0060		2-ISI-0130-C-01	12	F1.20C	F-A	96E-03	VT-3	N-VT-1		10.00		VAR SUP	
HPCIS	2-47B455H0061		2-ISI-0130-C-01	12	F1.20C	F-A	96E-03	VT-3	N-VT-1		10.00		VAR SUP	
HPCIS	2-47B455H0065		2-ISI-0130-C-01	12	F1.20C	F-A	P95-96	VT-3	N-VT-1		10.00		VAR SUP	
HPCIS	2-47B455H0066		2-ISI-0130-C-02	12	F1.20C	F-A	96E-03	VT-3	N-VT-1		14.00		VAR SUP	
HPCIS	2-47B455S0003		ISI-0275-C-01	12	F1.10B	F-A	96E-03	VT-3	N-VT-1		10.00		RGD HGR	
HPCIS	2-47B455S0023		ISI-0275-C-01	12	F1.10D	F-A	P95-96	VT-3	N-VT-1		10.00		SNBR	
HPCIS	2-SI-3.3.09		N/A	12	C7.30	C-H	96E-03	VT-2	N-VT-4				HYDRO	
HPCIS	2-SI-3.3.09		N/A	12	C7.50	C-H	96E-03	VT-2	N-VT-4				HYDRO	
HPCIS	2-SI-3.3.09		N/A	12	C7.70	C-H	96E-03	VT-2	N-VT-4				HYDRO	
HPCIS	THPCI-2-066	2-073-001	2-ISI-0273-C-01	12	R1.11	R-A	96E-03	UT	N-UT-76	WB-79	10.00	0.593	TEE	P
HPCIS	THPCI-2-068	2-073-001	2-ISI-0273-C-01	12	R1.11	R-A	96E-03	UT	N-UT-76	WB-79	10.00	0.593	EL	P
HPCIS	THPCI-2-070	2-073-001	2-ISI-0273-C-01	12	R1.11	R-A	96E-03	UT	N-UT-76	WB-79	10.00	0.593	EL	P
HPCIS	THPCI-2-072		2-ISI-0273-C-01	12	TS3432	B-J	B04-02	UT	N-UT-76	BF-50	10.00	0.593	VLV	P
HPCIS	THPCI-2-075	2-073-001	2-ISI-0273-C-01	12	R1.11	R-A	96E-03	UT	N-UT-76	WB-79	10.00	0.593	P	EL
HPCIS	THPCI-2-107	2-073-002	ISI-0128-C-01	12	R1.11	R-A	96E-03	UT	N-UT-76	WB-80	10.00	0.593	EL	P
HPCIS	THPCI-2-109	2-073-002	ISI-0128-C-01	12	R1.11	R-A	96E-03	UT	N-UT-76	WB-80	10.00	0.593	EL	P
MSS	2-47B400S0039		2-ISI-0279-C-02	12	F1.10A	F-A	96E-03	VT-3	N-VT-1		26.00		RGD HGR	
MSS	2-47B400S0098		2-ISI-0279-C-02	12	F1.10D	F-A	V01-02	VT-3	N-VT-1		26.00		SNBR	
MSS	2-47B400S0098-IA		2-ISI-0279-C-02	12	B10.20	B-K	V01-02	VT-1	N-VT-1			0.625	WLD ATT	
MSS	2-SI-3.3.1.C		N/A	12	C7.30	C-H	96E-03	VT-2	N-VT-4				E-LEAK	
MSS	2-SI-3.3.1.C		N/A	12	C7.70	C-H	96E-03	VT-2	N-VT-4				E-LEAK	
MSS	GMS-2-24		2-ISI-0222-C-02	12	TS3432	B-J	B04-02	UT	N-UT-76	WB-80	26.00	0.950	P	TEE
MSS	GMS-2-32		2-ISI-0222-C-01	12	TS3432	B-J	B04-02	UT	N-UT-76	WB-80	26.00	0.950	P	EL
MSS	HPAS-2-H-02		2-ISI-0079-C-02	12	F1.20C	F-A	P95-96	VT-3	N-VT-1		06.00		VAR SUP	
MSS	HPAS-2-H-07		2-ISI-0079-C-02	12	F1.20C	F-A	P95-96	VT-3	N-VT-1		06.00		VAR SUP	
MSS	MS-2-H-14-IA		2-ISI-0079-C-01	12	C3.20	C-C	96E-03	MT	N-MT-6			1.500	WLD ATT	
MSS	MSBC-2-01		2-ISI-0312-B-01	12	B7.50	B-G-2	96E-03	VT-1	N-VT-1				BLTG	
MSS	MSBC-2-02		2-ISI-0312-B-01	12	B7.50	B-G-2	96E-03	VT-1	N-VT-1				BLTG	
MSS	MSBC-2-05		2-ISI-0312-B-01	12	B7.50	B-G-2	96E-03	VT-1	N-VT-1				BLTG	
MSS	MSBC-2-07		2-ISI-0312-B-01	12	B7.50	B-G-2	96E-03	VT-1	N-VT-1				BLTG	
MSS	PCV1-2-022		2-ISI-0312-B-01	12	B12.50	B-M-2	96E-03	VT-3	N-VT-1		26.00		INT	
MSS	PCV1-2-022-PBC		2-ISI-0312-B-01	12	B7.50	B-G-2	96E-03	VT-1	N-VT-1				BLTG	
MSS	PCV1-2-022-PBC		2-ISI-0312-B-01	12	B7.50	B-G-2	P95-96	VT-1	N-VT-1				BLTG	
MSS	PCV1-2-022-VBC		2-ISI-0312-B-01	12	B7.70	B-G-2	96E-03	VT-1	N-VT-1				BLTG	
MSS	PCV1-2-022-VBC		2-ISI-0312-B-01	12	B7.70	B-G-2	P95-96	VT-1	N-VT-1				BLTG	
PCONT	2-SI-3.3.15		N/A	12	C7.30	C-H	96E-03	VT-2	N-VT-4				HYDRO	

SYSTEM	WELDNO	SEGMENT	ISONO	CYCLE	ITEMNO	CATEGORY	EXREQ	EXSCHD	NDEPROC	CALSTD	COMPDIA	NOMTHCK	COMPDESA	COMPDESB
PCONT	2-SI-3.3.15		N/A	12	C7.70	C-H	96E-03	VT-2	N-VT-4				HYDRO	
RADW	2-SI-3.3.2.A		N/A	12	C7.30	C-H	96E-03	VT-2	N-VT-4				HYDRO	
RADW	2-SI-3.3.2.A		N/A	12	C7.70	C-H	96E-03	VT-2	N-VT-4				HYDRO	
RADW	2-SI-3.3.2.B		N/A	12	C7.30	C-H	96E-03	VT-2	N-VT-4				HYDRO	
RADW	2-SI-3.3.2.B		N/A	12	C7.70	C-H	96E-03	VT-2	N-VT-4				HYDRO	
RBCCW	2-47B464S0121		ISI-0032-C-01	12	F1.20A	F-A	96E-03	VT-3	N-VT-1		08.00		RGD HGR	
RBCCW	2-47B464S0228		ISI-0032-C-01	12	F1.20D	F-A	96E-03	VT-3	N-VT-1		08.00		SNBR	
RBCCW	2-47B464S0228-IA		ISI-0032-C-01	12	C3.20	C-C	96E-03	MT	N-MT-6			0.500	WLD ATT	
RCICS	2-47B456R0001-IA		2-ISI-0131-C-01	12	C3.20	C-C	96E-03	MT	N-MT-6			0.500	WLD ATT	
RCICS	2-SI-3.3.10		N/A	12	C7.30	C-H	96E-03	VT-2	N-VT-4				E-LEAK	
RCICS	2-SI-3.3.10		N/A	12	C7.50	C-H	96E-03	VT-2	N-VT-4				E-LEAK	
RCICS	2-SI-3.3.10		N/A	12	C7.70	C-H	96E-03	VT-2	N-VT-4				E-LEAK	
RCWS	1-47B451S0228		ISI-0391-C-01	12	F1.30A	F-A	96E-03	VT-3	N-VT-1		06.00		HRS	
RCWS	1-47B451S0356		ISI-0391-C-01	12	F1.30B	F-A	96E-03	VT-3	N-VT-1		06.00		RGD HGR	
RECIR	2-47B408S0044		2-ISI-0278-C-02	12	F1.40C	F-A	96E-03	VT-3	N-VT-1		12.00		CFS	
RECIR	2-47B408S0056		2-ISI-0278-C-01	12	F1.40C	F-A	96E-03	VT-3	N-VT-1		12.00		CFS	
RECIR	2RB5	2-068-012	2-ISI-0270-C-02	12	R1.16A	R-A	96E-03	UT	N-UT-64	WB-83	12.00	0.569	P	EL
RECIR	KR-2-24	2-068-014	2-ISI-0270-C-02	12	R1.16C	R-A	96E-03	UT	N-UT-64	WB-83	28.00	1.322	EL	P
RECIR	KR-2-24	2-068-014	2-ISI-0270-C-02	12	NU0313	C	B02-02	UT	N-UT-64	WB-83	28.00	1.322	EL	P
RECIR	KR-2-25	2-068-014	2-ISI-0270-C-02	12	R1.16C	R-A	96E-03	UT	N-UT-64	WB-83	28.00	1.322	P	TEE
RECIR	KR-2-25	2-068-014	2-ISI-0270-C-02	12	NU0313	C	B02-02	UT	N-UT-64	WB-83	28.00	1.322	P	TEE
RECIR	KR-2-45	2-068-001	2-ISI-0270-C-01	12	R1.16C	R-A	96E-03	UT	N-UT-64	WB-83	28.00	1.138	P	EL
RECIR	KR-2-45	2-068-001	2-ISI-0270-C-01	12	NU0313	C	B02-02	UT	N-UT-64	WB-83	28.00	1.138	P	EL
RECIR	RBC-2-1		2-ISI-0270-C-01	12	B7.50	B-G-2	96E-03	VT-1	N-VT-1				BLTG	
RHR	2-SI-3.3.8.C		N/A	12	C7.10	C-H	96E-03	VT-2	N-VT-4				SIST	
RHR	2-SI-3.3.8.C		N/A	12	C7.30	C-H	96E-03	VT-2	N-VT-4				SIST	
RHR	2-SI-3.3.8.C		N/A	12	C7.50	C-H	96E-03	VT-2	N-VT-4				SIST	
RHR	2-SI-3.3.8.C		N/A	12	C7.70	C-H	96E-03	VT-2	N-VT-4				SIST	
RHRS	2-SI-3.3.8.A		N/A	12	C7.10	C-H	96E-03	VT-2	N-VT-4				HYDRO	
RHRS	2-SI-3.3.8.A		N/A	12	C7.30	C-H	96E-03	VT-2	N-VT-4				HYDRO	
RHRS	2-SI-3.3.8.A		N/A	12	C7.50	C-H	96E-03	VT-2	N-VT-4				HYDRO	
RHRS	2-SI-3.3.8.A		N/A	12	C7.70	C-H	96E-03	VT-2	N-VT-4				HYDRO	
RHRS	2-SI-3.3.8.A		N/A	12	D2.30	D-B	96E-03	VT-2	N-VT-4				HYDRO	
RHRS	2-SI-3.3.8.A		N/A	12	D2.70	D-B	96E-03	VT-2	N-VT-4				HYDRO	
RHRS	2-SI-3.3.8.B		N/A	12	C7.10	C-H	96E-03	VT-2	N-VT-4				HYDRO	
RHRS	2-SI-3.3.8.B		N/A	12	C7.30	C-H	96E-03	VT-2	N-VT-4				HYDRO	
RHRS	2-SI-3.3.8.B		N/A	12	C7.50	C-H	96E-03	VT-2	N-VT-4				HYDRO	
RHRS	2-SI-3.3.8.B		N/A	12	C7.70	C-H	96E-03	VT-2	N-VT-4				HYDRO	
RHRS	DRHR-2-03B	2-074-005	2-ISI-0221-C-01	12	R1.16G	R-A	96E-03	VT-2	N-VT-4		24.00	1.219	P	P
RHRS	DRHR-2-03B	2-074-005	2-ISI-0221-C-01	12	NU0313	G	B02-02	VT-2	N-VT-4		24.00	1.219	P	P

SYSTEM	WELDNO	SEGMENT	ISONO	CYCLE	ITEMNO	CATEGORY	EXREQ	EXSCHD	NDEPROC	CALSTD	COMPDIA	NOMTHCK	COMPDESA	COMPDESB
RHRS	DRHR-2-13B	2-074-013	2-ISI-0221-C-01	12	R1.16G	R-A	96E-03	VT-2	N-VT-4		24.00	1.219	P	P
RHRS	DRHR-2-13B	2-074-013	2-ISI-0221-C-01	12	NU0313	G	B02-02	VT-2	N-VT-4		24.00	1.219	P	P
RHRS	DSRHR-2-07		2-ISI-0221-C-01	12	NU0313	C	B02-02	UT	N-UT-64	WB-83	24.00	1.219	P	EL
RHRS	DSRHR-2-07		2-ISI-0221-C-01	12	TS3432	B-J	B04-02	UT	N-UT-64	WB-83	24.00	1.219	P	EL
RHRS	FCV-74-47		2-ISI-0221-C-01	12	B12.50	B-M-2	96E-03	VT-3	N-VT-1		20.00		INT	
RHRS	FCV-74-47		2-ISI-0221-C-01	12	B12.50	B-M-2	V01-02	VT-3	N-VT-1		20.00		INT	
RHRS	RHR-2-R-95		2-ISI-0324-C-09	12	F1.20D	F-A	96E-03	VT-3	N-VT-1		24.00		SNBR	
RHRS	RHRG-2-05-A		2-ISI-0406-C-01	12	C2.33	C-B	96E-03	VT-2	N-VT-4		10.50	0.875	NOZ	
RHRS	RHRG-2-06-A		2-ISI-0406-C-01	12	C2.33	C-B	96E-03	VT-2	N-VT-4		10.50	0.875	NOZ	
RHRS	RHRG-2-07-A		2-ISI-0406-C-01	12	C1.10	C-A	96E-03	UT	N-UT-18	BF-26	54"	0.875	SHL	FLG
RHRS	RHRG-2-13-A		2-ISI-0406-C-01	12	F1.40B	F-A	S01-03	VT-3	N-VT-1				HVES	
RHRS	RHRG-2-14-D		2-ISI-0406-C-01	12	F1.40B	F-A	S01-03	VT-3	N-VT-1				HVES	
RHRSW	2-17B300S0091		2-ISI-0145-C-01	12	F1.30A	F-A	96E-03	VT-3	N-VT-1		16.00		RGD HGR	
RHRSW	2-47B450H0043-IA		2-ISI-0145-C-02	12	D1.20	D-A	96E-03	VT-1	N-VT-1			0.625	WLD ATT	
RHRSW	2-47B450R0028		2-ISI-0145-C-02	12	F1.30A	F-A	96E-03	VT-3	N-VT-1		12.00		RGD STRT	
RPV	2-SI-3.3.1.A		N/A	12	B15.10	B-P	96E-03	VT-2	N-VT-4				E-LEAK	
RPV	2-SI-3.3.1.A		N/A	12	B15.50	B-P	96E-03	VT-2	N-VT-4				E-LEAK	
RPV	2-SI-3.3.1.A		N/A	12	B15.60	B-P	96E-03	VT-2	N-VT-4				E-LEAK	
RPV	2-SI-3.3.1.A		N/A	12	B15.70	B-P	96E-03	VT-2	N-VT-4				E-LEAK	
RPV	N-16A-SE		2-ISI-0383-C-01	12	N/A	BWRVIP-49	B07-02	VT-2	N-VT-4		2.00	0.218	NOZ	SE
RPV	N-16B-SE		2-ISI-0383-C-02	12	N/A	BWRVIP-49	B07-02	VT-2	N-VT-4		2.00	0.250	NOZ	SE
RPV	N10-SE		2-ISI-0380-C-01	12	N/A	BWRVIP-27	B07-02	VT-2	N-VT-4		1.5	0.218	SE	NOZ
RPV	N11A-SE		2-ISI-0383-C-01	12	N/A	BWRVIP-49	B07-02	VT-2	N-VT-4		2.00	0.250	SE	P
RPV	N11B-SE		2-ISI-0383-C-02	12	N/A	BWRVIP-49	B07-02	VT-2	N-VT-4		2.00	0.250	SE	P
RPV	N12A-SE		2-ISI-0383-C-01	12	N/A	BWRVIP-49	B07-02	VT-2	N-VT-4		2.00	0.250	SE	P
RPV	N12B-SE		2-ISI-0383-C-02	12	N/A	BWRVIP-49	B07-02	VT-2	N-VT-4		2.00	0.250	P	PC,PIPE
RPV	N1A		2-CHM-2046-C-01	12	B3.90	B-D	96E-03	UT	N-UT-78	BF-18	28.00	6.600	SHL	NOZ
RPV	N1A-IR		2-CHM-2046-C-01	12	B3.100	B-D	96E-03	VT-1E	VENDOR VT		28.00	6.600	NOZ IR	
RPV	N2B		2-CHM-2046-C-01	12	B3.90	B-D	96E-03	UT	N-UT-78	BF-18	12.00	6.600	NOZ	SHL
RPV	N2B-IR		2-CHM-2046-C-01	12	B3.100	B-D	96E-03	VT-1E	VENDOR VT		12.00	6.600	NOZ IR	
RPV	N2F		2-CHM-2046-C-01	12	B3.90	B-D	96E-03	UT	N-UT-78	BF-18	12.00	6.6	NOZ	SHL
RPV	N2F-IR		2-CHM-2046-C-01	12	B3.100	B-D	96E-03	VT-1E	VENDOR VT		12.00	6.600	NOZ IR	
RPV	N2J		2-CHM-2046-C-01	12	B3.90	B-D	96E-03	UT	N-UT-78	BF-18	12.00	6.600	NOZ	SHL
RPV	N2J-IR		2-CHM-2046-C-01	12	B3.100	B-D	96E-03	VT-1E	VENDOR VT		12.00	6.600	NOZ IR	
RPV	N3D		2-CHM-2046-C-01	12	B3.90	B-D	96E-03	UT	N-UT-78	BF-18	26.00	6.600	NOZ	SHL
RPV	N3D-IR		2-CHM-2046-C-01	12	B3.100	B-D	96E-03	VT-1E	VENDOR VT		26.00	6.600	NOZ IR	
RPV	N4A		2-CHM-2046-C-01	12	B3.90	B-D	96E-03	UT	N-UT-78	BF-18	12.00	6.600	NOZ	SHL
RPV	N4A-FW-SPARG		2-CHM-2046-C-02	12	N/A	NU0619	B01-02	VT-1	VENDOR VT					
RPV	N4A-IR		2-CHM-2046-C-01	12	B3.100	B-D	96E-03	UT	VENDOR UT	BF-18	12.00	6.600	NOZ IR	
RPV	N4A-IR/NB		2-ISI-0277-C-01	12	NU0619	B-D	B01-02	UT	VENDOR UT	BF-18			NOZ IR	NOZ BR

SYSTEM	WELDNO	SEGMENT	ISONO	CYCLE	ITEMNO	CATEGORY	EXREQ	EXSCHD	NDEPROC	CALSTD	COMPDIA	NOMTHCK	COMPDESA	COMPDESB
RPV	N4B		2-CHM-2046-C-01	12	B3.90	B-D	96E-03	UT	N-UT-78		12.00	6.600	NOZ	SHL
RPV	N4B-FW-SPARG		2-CHM-2046-C-02	12	N/A	NU0619	B01-02	VT-1	VENDOR VT					
RPV	N4B-IR		2-CHM-2046-C-01	12	B3.100	B-D	96E-03	UT	VENDOR UT	BF-18	12.00	6.600	NOZ IR	
RPV	N4B-IR/NB		2-ISI-0277-C-01	12	NU0619	B-D	B01-02	UT	VENDOR UT	BF-18			NOZ IR	NOZ BR
RPV	N4C		2-CHM-2046-C-01	12	B3.90	B-D	96E-03	UT	N-UT-78	BF-18	12.00	6.600	NOZ	SHL
RPV	N4C-FW-SPARG		2-CHM-2046-C-02	12	N/A	NU0619	B01-02	VT-1	VENDOR VT					
RPV	N4C-IR		2-CHM-2046-C-01	12	B3.100	B-D	96E-03	UT	VENDOR UT		12.00	6.600	NOZ IR	
RPV	N4C-IR/NB		2-ISI-0277-C-01	12	NU0619	B-D	B01-02	UT	VENDOR UT	BF-18			NOZ IR	NOZ IR
RPV	N4D		2-CHM-2046-C-01	12	B3.90	B-D	96E-03	UT	N-UT-78	BF-18	12.00	6.600	NOZ	SHL
RPV	N4D-FW-SPARG		2-CHM-2046-C-02	12	N/A	NU0619	B01-02	VT-1	VENDOR VT					
RPV	N4D-IR		2-CHM-2046-C-01	12	B3.100	B-D	96E-03	UT	VENDOR UT	BF-18	12.00	6.600	NOZ IR	
RPV	N4D-IR/NB		2-ISI-0277-C-01	12	NU0619	B-D	B01-02	UT	VENDOR UT	BF-18			NOZ IR	NOZ BR
RPV	N4E		2-CHM-2046-C-01	12	B3.90	B-D	96E-03	UT	N-UT-78	BF-18	12.00	6.600	NOZ	SHL
RPV	N4E-FW-SPARG		2-CHM-2046-C-02	12	N/A	NU0619	B01-02	VT-1	VENDOR VT					
RPV	N4E-IR		2-CHM-2046-C-01	12	B3.100	B-D	96E-03	UT	VENDOR UT	BF-18	12.00	6.600	NOZ IR	
RPV	N4E-IR/NB		2-ISI-0277-C-01	12	NU0619	B-D	B01-02	UT	VENDOR UT	BF-18			NOZ IR	NOZ BR
RPV	N4F		2-CHM-2046-C-01	12	B3.90	B-D	96E-03	UT	N-UT-78	BF-18	12.00	6.600	NOZ	SHL
RPV	N4F-FW-SPARG		2-CHM-2046-C-02	12	N/A	NU0619	B01-02	VT-1	VENDOR VT					
RPV	N4F-IR		2-CHM-2046-C-01	12	B3.100	B-D	96E-03	UT	VENDOR UT	BF-18	12.00	6.600	NOZ IR	
RPV	N4F-IR/NB		2-ISI-0277-C-01	12	NU0619	B-D	B01-02	UT	VENDOR UT	BF-18			NOZ IR	NOZ BR
RPV	N6A-IR		ISI-0408-C-01	12	B3.100	B-D	96E-03	VT-1E	N-VT-1		06.00	4.340	NOZ IR	
RPV	N6A-NV		ISI-0408-C-01	12	B3.90	B-D	96E-03	UT	N-UT-78	BF-19& BF-84-IR	6.00	4.340	NOZ	CL HD
RPV	N8A		2-CHM-2046-C-01	12	B3.90	B-D	96E-03	UT	N-UT-78	BF-18	04.06	6.600	NOZ	SHL
RPV	N8A-IR		2-CHM-2046-C-01	12	B3.100	B-D	96E-03	VT-1E	N-VT-1		04.06	6.600	NOZ IR	
RPV	RCH-2-1C		ISI-0408-C-01	12	B1.21	B-A	96E-03	UT	N-UT-78	BF-19	~145	4.000	CH CS	
RPV	RCH-2-1V		ISI-0408-C-01	12	B1.22	B-A	96E-03	UT	N-UT-78	BF-19	~96L	4.000	VERT LS	
RPV	RCH-2-2V		ISI-0408-C-01	12	B1.22	B-A	96E-03	UT	N-UT-78	BF-19	~96L	4.000	VERT LS	
RPV	RPV CORE PLATE		2-CHM-2046-C-02	12	N/A	N/A	0TI365	VT-3	VENDOR VT				INT	
RPV	RPV CS PIPING		2-CHM-2046-C-02	12	N/A	N/A	0TI365	EVT	VENDOR VT		6.000		INT	
RPV	RPV CS PIPING		2-CHM-2046-C-02	12	N/A	N/A	0TI365	VT-1	VENDOR VT		6.000		INT	
RPV	RPV JET PUMPS		2-CHM-2046-C-02	12	N/A	N/A	0TI365	EVT	VENDOR VT				INT	
RPV	RPV JET PUMPS		2-CHM-2046-C-02	12	N/A	N/A	0TI365	VT-1	VENDOR VT				INT	
RPV	RPV JET PUMPS		2-CHM-2046-C-02	12	N/A	N/A	0TI365	VT-3	VENDOR VT				INT	
RPV	RPV STEAM DRYER		2-CHM-2046-C-02	12	N/A	N/A	0TI365	EVT	VENDOR VT				INT	
RPV	RPV TOP GUIDE		2-CHM-2046-C-02	12	N/A	N/A	0TI365	VT-3	VENDOR VT				INT	
RPV	RPV TOP GUIDE		2-CHM-2046-C-02	12	N/A	N/A	0TI365	VT-1	VENDOR VT				INT	
RPV	RPV TOP GUIDE		2-CHM-2046-C-02	12	N/A	N/A	0TI365	EVT	VENDOR VT				INT	
RPV	RPV-INTERIOR		2-CHM-2046-C-02	12	B13.10	B-N-1	96E-03	VT-3	VENDOR VT				INT	
RPV	RPV-NUTS-2-01		ISI-0266-C-01	12	B6.10	B-G-1	96E-03	VT-1	N-VT-1		08.50		CL HD BLT	

SYSTEM	WELDNO	SEGMENT	ISONO	CYCLE	ITEMNO	CATEGORY	EXREQ	EXSCHD	NDEPROC	CALSTD	COMPDIA	NOMTHCK	COMPDESA	COMPDESB
RPV	RPV-NUTS-2-02		ISI-0266-C-01	12	B6.10	B-G-1	96E-03	VT-1	N-VT-1		08.50		CL HD BLT	
RPV	RPV-NUTS-2-03		ISI-0266-C-01	12	B6.10	B-G-1	96E-03	VT-1	N-VT-1		08.50		CL HD BLT	
RPV	RPV-NUTS-2-04		ISI-0266-C-01	12	B6.10	B-G-1	96E-03	VT-1	N-VT-1		08.50		CL HD BLT	
RPV	RPV-NUTS-2-05		ISI-0266-C-01	12	B6.10	B-G-1	96E-03	VT-1	N-VT-1		08.50		CL HD BLT	
RPV	RPV-NUTS-2-06		ISI-0266-C-01	12	B6.10	B-G-1	96E-03	VT-1	N-VT-1		08.50		CL HD BLT	
RPV	RPV-NUTS-2-07		ISI-0266-C-01	12	B6.10	B-G-1	96E-03	VT-1	N-VT-1		08.50		CL HD BLT	
RPV	RPV-NUTS-2-08		ISI-0266-C-01	12	B6.10	B-G-1	96E-03	VT-1	N-VT-1		08.50		CL HD BLT	
RPV	RPV-NUTS-2-09		ISI-0266-C-01	12	B6.10	B-G-1	96E-03	VT-1	N-VT-1		08.50		CL HD BLT	
RPV	RPV-NUTS-2-10		ISI-0266-C-01	12	B6.10	B-G-1	96E-03	VT-1	N-VT-1		08.50		CL HD BLT	
RPV	RPV-NUTS-2-11		ISI-0266-C-01	12	B6.10	B-G-1	96E-03	VT-1	N-VT-1		08.50		CL HD BLT	
RPV	RPV-NUTS-2-12		ISI-0266-C-01	12	B6.10	B-G-1	96E-03	VT-1	N-VT-1		08.50		CL HD BLT	
RPV	RPV-NUTS-2-13		ISI-0266-C-01	12	B6.10	B-G-1	96E-03	VT-1	N-VT-1		08.50		CL HD BLT	
RPV	RPV-NUTS-2-14		ISI-0266-C-01	12	B6.10	B-G-1	96E-03	VT-1	N-VT-1		08.50		CL HD BLT	
RPV	RPV-NUTS-2-15		ISI-0266-C-01	12	B6.10	B-G-1	96E-03	VT-1	N-VT-1		08.50		CL HD BLT	
RPV	RPV-NUTS-2-16		ISI-0266-C-01	12	B6.10	B-G-1	96E-03	VT-1	N-VT-1		08.50		CL HD BLT	
RPV	RPV-NUTS-2-17		ISI-0266-C-01	12	B6.10	B-G-1	96E-03	VT-1	N-VT-1		08.50		CL HD BLT	
RPV	RPV-NUTS-2-18		ISI-0266-C-01	12	B6.10	B-G-1	96E-03	VT-1	N-VT-1		08.50		CL HD BLT	
RPV	RPV-NUTS-2-19		ISI-0266-C-01	12	B6.10	B-G-1	96E-03	VT-1	N-VT-1		08.50		CL HD BLT	
RPV	RPV-NUTS-2-20		ISI-0266-C-01	12	B6.10	B-G-1	96E-03	VT-1	N-VT-1		08.50		CL HD BLT	
RPV	RPV-NUTS-2-21		ISI-0266-C-01	12	B6.10	B-G-1	96E-03	VT-1	N-VT-1		08.50		CL HD BLT	
RPV	RPV-NUTS-2-22		ISI-0266-C-01	12	B6.10	B-G-1	96E-03	VT-1	N-VT-1		08.50		CL HD BLT	
RPV	RPV-NUTS-2-23		ISI-0266-C-01	12	B6.10	B-G-1	96E-03	VT-1	N-VT-1		08.50		CL HD BLT	
RPV	RPV-NUTS-2-24		ISI-0266-C-01	12	B6.10	B-G-1	96E-03	VT-1	N-VT-1		08.50		CL HD BLT	
RPV	RPV-NUTS-2-25		ISI-0266-C-01	12	B6.10	B-G-1	96E-03	VT-1	N-VT-1		08.50		CL HD BLT	
RPV	RPV-NUTS-2-26		ISI-0266-C-01	12	B6.10	B-G-1	96E-03	VT-1	N-VT-1		08.50		CL HD BLT	
RPV	RPV-NUTS-2-27		ISI-0266-C-01	12	B6.10	B-G-1	96E-03	VT-1	N-VT-1		08.50		CL HD BLT	
RPV	RPV-NUTS-2-28		ISI-0266-C-01	12	B6.10	B-G-1	96E-03	VT-1	N-VT-1		08.50		CL HD BLT	
RPV	RPV-NUTS-2-29		ISI-0266-C-01	12	B6.10	B-G-1	96E-03	VT-1	N-VT-1		08.50		CL HD BLT	
RPV	RPV-NUTS-2-30		ISI-0266-C-01	12	B6.10	B-G-1	96E-03	VT-1	N-VT-1		08.50		CL HD BLT	
RPV	RPV-STAB-2-1		ISI-0415-C-01	12	F1.40C	F-A	96E-03	VT-3	N-VT-1				STAB	
RPV	RPV-STAB-2-1A-IA		ISI-0415-C-01	12	B10.10	B-K	96E-03	PT	N-PT-9				WLD ATT	
RPV	RPV-STAB-2-1B-IA		ISI-0415-C-01	12	B10.10	B-K	96E-03	PT	N-PT-9				WLD ATT	
RPV	RPV-STAB-2-1C-IA		ISI-0415-C-01	12	B10.10	B-K	96E-03	PT	N-PT-9				WLD ATT	
RPV	RPV-STAB-2-1D-IA		ISI-0415-C-01	12	B10.10	B-K	96E-03	PT	N-PT-9				WLD ATT	
RPV	RPV-STAB-2-1E-IA		ISI-0415-C-01	12	B10.10	B-K	96E-03	PT	N-PT-9				WLD ATT	
RPV	RPV-STAB-2-1F-IA		ISI-0415-C-01	12	B10.10	B-K	96E-03	PT	N-PT-9				WLD ATT	
RPV	RPV-STAB-2-1G-IA		ISI-0415-C-01	12	B10.10	B-K	96E-03	PT	N-PT-9				WLD ATT	
RPV	RPV-STAB-2-1H-IA		ISI-0415-C-01	12	B10.10	B-K	96E-03	PT	N-PT-9				WLD ATT	
RPV	RPV-WASH-2-01		ISI-0266-C-01	12	B6.50	B-G-1	96E-03	VT-1	N-VT-1		06.00	08.62	WASH	
RPV	RPV-WASH-2-02		ISI-0266-C-01	12	B6.50	B-G-1	96E-03	VT-1	N-VT-1		06.00	08.62	WASH	

SYSTEM	WELDNO	SEGMENT	ISONO	CYCLE	ITEMNO	CATEGORY	EXREQ	EXSCHD	NDEPROC	CALSTD	COMPDIA	NOMTHCK	COMPDESA	COMPDESB
RPV	RPV-WASH-2-03		ISI-0266-C-01	12	B6.50	B-G-1	96E-03	VT-1	N-VT-1		06.00	08.62	WASH	
RPV	RPV-WASH-2-04		ISI-0266-C-01	12	B6.50	B-G-1	96E-03	VT-1	N-VT-1		06.00	08.62	WASH	
RPV	RPV-WASH-2-05		ISI-0266-C-01	12	B6.50	B-G-1	96E-03	VT-1	N-VT-1		06.00	08.62	WASH	
RPV	RPV-WASH-2-06		ISI-0266-C-01	12	B6.50	B-G-1	96E-03	VT-1	N-VT-1		06.00	08.62	WASH	
RPV	RPV-WASH-2-07		ISI-0266-C-01	12	B6.50	B-G-1	96E-03	VT-1	N-VT-1		06.00	08.62	WASH	
RPV	RPV-WASH-2-08		ISI-0266-C-01	12	B6.50	B-G-1	96E-03	VT-1	N-VT-1		06.00	08.62	WASH	
RPV	RPV-WASH-2-09		ISI-0266-C-01	12	B6.50	B-G-1	96E-03	VT-1	N-VT-1		06.00	08.62	WASH	
RPV	RPV-WASH-2-10		ISI-0266-C-01	12	B6.50	B-G-1	96E-03	VT-1	N-VT-1		06.00	08.62	WASH	
RPV	RPV-WASH-2-11		ISI-0266-C-01	12	B6.50	B-G-1	96E-03	VT-1	N-VT-1		06.00	08.62	WASH	
RPV	RPV-WASH-2-12		ISI-0266-C-01	12	B6.50	B-G-1	96E-03	VT-1	N-VT-1		06.00	08.62	WASH	
RPV	RPV-WASH-2-13		ISI-0266-C-01	12	B6.50	B-G-1	96E-03	VT-1	N-VT-1		06.00	08.62	WASH	
RPV	RPV-WASH-2-14		ISI-0266-C-01	12	B6.50	B-G-1	96E-03	VT-1	N-VT-1		06.00	08.62	WASH	
RPV	RPV-WASH-2-15		ISI-0266-C-01	12	B6.50	B-G-1	96E-03	VT-1	N-VT-1		06.00	08.62	WASH	
RPV	RPV-WASH-2-16		ISI-0266-C-01	12	B6.50	B-G-1	96E-03	VT-1	N-VT-1		06.00	08.62	WASH	
RPV	RPV-WASH-2-17		ISI-0266-C-01	12	B6.50	B-G-1	96E-03	VT-1	N-VT-1		06.00	08.62	WASH	
RPV	RPV-WASH-2-18		ISI-0266-C-01	12	B6.50	B-G-1	96E-03	VT-1	N-VT-1		06.00	08.62	WASH	
RPV	RPV-WASH-2-19		ISI-0266-C-01	12	B6.50	B-G-1	96E-03	VT-1	N-VT-1		06.00	08.62	WASH	
RPV	RPV-WASH-2-20		ISI-0266-C-01	12	B6.50	B-G-1	96E-03	VT-1	N-VT-1		06.00	08.62	WASH	
RPV	RPV-WASH-2-21		ISI-0266-C-01	12	B6.50	B-G-1	96E-03	VT-1	N-VT-1		06.00	08.62	WASH	
RPV	RPV-WASH-2-22		ISI-0266-C-01	12	B6.50	B-G-1	96E-03	VT-1	N-VT-1		06.00	08.62	WASH	
RPV	RPV-WASH-2-23		ISI-0266-C-01	12	B6.50	B-G-1	96E-03	VT-1	N-VT-1		06.00	08.62	WASH	
RPV	RPV-WASH-2-24		ISI-0266-C-01	12	B6.50	B-G-1	96E-03	VT-1	N-VT-1		06.00	08.62	WASH	
RPV	RPV-WASH-2-25		ISI-0266-C-01	12	B6.50	B-G-1	96E-03	VT-1	N-VT-1		06.00	08.62	WASH	
RPV	RPV-WASH-2-26		ISI-0266-C-01	12	B6.50	B-G-1	96E-03	VT-1	N-VT-1		06.00	08.62	WASH	
RPV	RPV-WASH-2-27		ISI-0266-C-01	12	B6.50	B-G-1	96E-03	VT-1	N-VT-1		06.00	08.62	WASH	
RPV	RPV-WASH-2-28		ISI-0266-C-01	12	B6.50	B-G-1	96E-03	VT-1	N-VT-1		06.00	08.62	WASH	
RPV	RPV-WASH-2-29		ISI-0266-C-01	12	B6.50	B-G-1	96E-03	VT-1	N-VT-1		06.00	08.62	WASH	
RPV	RPV-WASH-2-30		ISI-0266-C-01	12	B6.50	B-G-1	96E-03	VT-1	N-VT-1		06.00	08.62	WASH	
RWCUS	DSRWC-2-06	2-069-001	2-ISI-0272-C-01	12	NU0313	C	B02-02	UT	N-UT-64	WB-83	06.00	0.432	EL	P
RWCUS	DSRWC-2-06	2-069-001	2-ISI-0272-C-01	12	TS3432	B-J	B04-02	UT	N-UT-64	WB-83	06.00	0.432	EL	P
RWCUS	RWCU-2-003-G003	2-069-002	2-ISI-0272-C-01	12	R1.16A	R-A	96E-03	UT	N-UT-64	WB-83	6.00	0.432	PEN	P
SLCS	2-SI-3.3.4		N/A	12	C7.30	C-H	96E-03	VT-2	N-VT-4				HYDRO	
SLCS	2-SI-3.3.4		N/A	12	C7.50	C-H	96E-03	VT-2	N-VT-4				HYDRO	
SLCS	2-SI-3.3.4		N/A	12	C7.70	C-H	96E-03	VT-2	N-VT-4				HYDRO	

OWNER: TENNESSEE VALLEY AUTHORITY
NUCLEAR POWER GROUP
1101 MARKET STREET
CHATTANOOGA, TENNESSEE 37402

PLANT: BROWNS FERRY NUCLEAR PLANT
PO BOX 2000
DECATUR, ALABAMA 35609-2000

EXAM REQUIREMENT
96E-03 NO VT-2
P95-96
S01-03

UNIT: TWO CYCLE: 12 COMMERCIAL SERVICE DATE: MARCH 1, 1975

CERTIFICATION OF AUTHORIZATION: NOT REQUIRED
NATIONAL BOARD NUMBER FOR UNIT: NOT REQUIRED

System	Component Number	ISO Drawing	Exreq	Category	Item Number	Exam Scheduled	Calibration Standard	Exam Date	Exam Report	Exam Results	Comments
CRDS	2-47B468S0001	2-ISI-0041-C-02	96E-03	F-A	F1.20B	VT-3		20030212	R-046	P	
CRDS	2-47B468S0001-IA	2-ISI-0041-C-02	96E-03	C-C	C3.20	MT		20030213	R-047	P	
CRDS	2-47B468S0006	2-ISI-0041-C-01	96E-03	F-A	F1.20B	VT-3		20030213	R-048	P	
CRDS	2-47B468S0012	2-ISI-0041-C-01	96E-03	F-A	F1.20A	VT-3		20030213	R-049	P	
CRDS	2-47B468S0016	2-ISI-0041-C-02	96E-03	F-A	F1.40B	VT-3		20030212	R-045	P	
CRDS	2-47B468S0017	2-ISI-0041-C-02	96E-03	F-A	F1.40B	VT-3		20030212	R-044	P	
CRDS	2-47B468S0018	2-ISI-0041-C-02	96E-03	F-A	F1.40B	VT-3		20030212	R-043	P	
CRDS	2-47B468S0040	2-ISI-0041-C-01	96E-03	F-A	F1.20A	VT-3		20030213	R-050	P	
CSS	2-47B458S0004	2-ISI-0280-C-01	96E-03	F-A	F1.10D	VT-3		20030302	R-108	P	
CSS	2-47B458S0007	2-ISI-0280-C-01	96E-03	F-A	F1.10D	VT-3		20030226	R-069	P	
CSS	2-47B458S0010	2-ISI-0280-C-01	96E-03	F-A	F1.10C	VT-3		20030226	R-068	P	
CSS	CS-2-H-1	2-ISI-0105-C-02	96E-03	F-A	F1.20A	VT-3		20030131	R-034	P	
CSS	CS-2-H-11	2-ISI-0105-C-02	96E-03	F-A	F1.20C	VT-3		20030130	R-037	P	
CSS	CS-2-H-11-IA	2-ISI-0105-C-02	96E-03	C-C	C3.20	MT		20030203	R-036	P	
CSS	CS-2-H-2	2-ISI-0105-C-02	96E-03	F-A	F1.20C	VT-3		20030131	R-032	P	
CSS	CS-2-H-21	2-ISI-0105-C-01	96E-03	F-A	F1.20A	VT-3		20030131	R-035	P	
CSS	CS-2-H-7	2-ISI-0105-C-02	96E-03	F-A	F1.20C	VT-3		20030130	R-033	P	
CSS	CS-2-H-7-IA	2-ISI-0105-C-02	96E-03	C-C	C3.20	MT		20030131	R-031	P	
CSS	CS-2-PS-01	2-ISI-0105-C-01	96E-03	F-A	F1.40B	VT-3		20030130	R-029	P	
CSS	CS-48N1025-2-B	2-ISI-0105-C-02	96E-03	F-A	F1.20B	VT-3		20030130	R-028	P	
CSS	DCS-2-07	2-ISI-0271-C-01	96E-03	R-A	R1.16C	UT	WB-83	20030304	R-127	P	
CSS	DCS-2-13A	2-ISI-0271-C-01	96E-03	R-A	R1.16C	UT	WB-83	20030306	R-139	P	

OWNER: TENNESSEE VALLEY AUTHORITY
NUCLEAR POWER GROUP
1101 MARKET STREET
CHATTANOOGA, TENNESSEE 37402

EXAM REQUIREMENT
96E-03 NO VT-2
P95-96
S01-03

PLANT: BROWNS FERRY NUCLEAR PLANT
PO BOX 2000
DECATUR, ALABAMA 35609-2000

UNIT: TWO CYCLE: 12 COMMERCIAL SERVICE DATE: MARCH 1, 1975

CERTIFICATION OF AUTHORIZATION: NOT REQUIRED
NATIONAL BOARD NUMBER FOR UNIT: NOT REQUIRED

System	Component Number	ISO Drawing	Exreq	Category	Item Number	Exam Scheduled	Calibration Standard	Exam Date	Exam Report	Exam Results	Comments
CSS	DSCS-2-01	2-ISI-0271-C-01	96E-03	R-A	R1.16C	UT	WB-83	20030227	R-075	P	
CSS	DSCS-2-02	2-ISI-0271-C-01	96E-03	R-A	R1.16C	UT	WB-83	20030226	R-070	P	
EECW	0-37B205S0056-IA	ISI-0368-C-01	96E-03	D-A	D1.20	VT-1		20030121	R-017	P	
EECW	1-47B451R0055-IA	ISI-0368-C-14	96E-03	D-A	D1.20	VT-1		20030121	R-020	P	
EECW	RHRSW-PMP-0-B1	ISI-0368-C-02	96E-03	F-A	F1.40B	VT-3		20030121	R-019	P	
EECW	RHRSW-STR-0-A1	ISI-0368-C-01	96E-03	F-A	F1.40B	VT-3		20030121	R-018	P	
FWS	2-47B415H0001	2-ISI-0277-C-01	96E-03	F-A	F1.40C	VT-3		20030101	R-089	P	
FWS	2-47B415H0004	2-ISI-0277-C-01	96E-03	F-A	F1.10C	VT-3		20030301	R-098	P	
FWS	2-47B415H0004-IA	2-ISI-0277-C-01	96E-03	B-K	B10.20	MT		20030301	R-121	P	
FWS	2-47B415H0005	2-ISI-0277-C-01	96E-03	F-A	F1.10C	VT-3		20030228	R-086	P	
FWS	2-47B415H0007	2-ISI-0277-C-01	96E-03	F-A	F1.40C	VT-3		20030301	R-090	P	
FWS	2-47B415H0010	2-ISI-0277-C-01	96E-03	F-A	F1.10C	VT-3		20030301	R-099	P	
FWS	2-47B415H0010-IA	2-ISI-0277-C-01	96E-03	B-K	B10.20	MT		20030301	R-120	P	
FWS	2-47B415S0002	2-ISI-0277-C-01	96E-03	F-A	F1.10D	VT-3		20030303	R-116	P	
FWS	2-47B415S0002-IA	2-ISI-0277-C-01	96E-03	B-K	B10.20	MT		20030303	R-117	P	
FWS	2-47B415S0005	2-ISI-0277-C-01	96E-03	F-A	F1.10D	VT-3		20030301	R-096	P	
FWS	2-47B415S0008	2-ISI-0277-C-01	96E-03	F-A	F1.10D	VT-3		20030228	R-082	P	
FWS	2-47B415S0009	2-ISI-0277-C-01	P95-96	F-A	F1.10D	VT-3		20030309	R-159	P	Preservice exam, one pin prior to installation
FWS	2-47B415S0010	2-ISI-0277-C-01	96E-03	F-A	F1.10D	VT-3		20030301	R-095	P	
FWS	2-47B415S0014	2-ISI-0277-C-01	96E-03	F-A	F1.10D	VT-3		20030301	R-097	P	
FWS	2-47B415S0019	2-ISI-0277-C-01	96E-03	F-A	F1.10D	VT-3		20030301	R-092	P	
FWS	2-47B415S0025	2-ISI-0277-C-01	96E-03	F-A	F1.10B	VT-3		20030228	R-077	P	

OWNER: TENNESSEE VALLEY AUTHORITY
NUCLEAR POWER GROUP
1101 MARKET STREET
CHATTANOOGA, TENNESSEE 37402

PLANT: BROWNS FERRY NUCLEAR PLANT
PO BOX 2000
DECATUR, ALABAMA 35609-2000

EXAM REQUIREMENT
96E-03 NO VT-2
P95-96
S01-03

UNIT: TWO CYCLE: 12 COMMERCIAL SERVICE DATE: MARCH 1, 1975

CERTIFICATION OF AUTHORIZATION: NOT REQUIRED
NATIONAL BOARD NUMBER FOR UNIT: NOT REQUIRED

System	Component Number	ISO Drawing	Exreq	Category	Item Number	Exam Scheduled	Calibration Standard	Exam Date	Exam Report	Exam Results	Comments
FWS	2RFW1B-27E	2-ISI-0269-C-01	96E-03	R-A	R1.18	UT	01-7472	20030305	R-131	P	
FWS	2RFW1B-30P	2-ISI-0269-C-01	96E-03	R-A	R1.18	UT	01-7473	20030305	R-128	P	
FWS	2RFW1B-39E	2-ISI-0269-C-01	96E-03	R-A	R1.18	UT	01-7480	20030305	R-129	P	
FWS	2RFW1B-44E	2-ISI-0269-C-01	96E-03	R-A	R1.18	UT	01-7471	20030304	R-134	P	
FWS	2RFW1B-6E	2-ISI-0269-C-01	96E-03	R-A	R1.18	UT	01-7471	20030304	R-132	P	
FWS	2RFW2A-13T	2-ISI-0269-C-01	96E-03	R-A	R1.18	UT	01-7471	20030305	R-136	P	
FWS	2RFW2A-16T	2-ISI-0269-C-01	96E-03	R-A	R1.18	UT	01-7473	20030304	R-135	P	
FWS	2RFW2A-27E	2-ISI-0269-C-01	96E-03	R-A	R1.18	UT	01-7471	20030304	R-122	P	
FWS	2RFW2A-39E	2-ISI-0269-C-01	96E-03	R-A	R1.18	UT	01-7471	20030305	R-133	P	
FWS	2RFW2A-45P	2-ISI-0269-C-01	96E-03	R-A	R1.18	UT	01-7472	20030305	R-130	P	
FWS	3-568	2-ISI-0269-C-01	96E-03	B-M-2	B12.50	VT-3		20020426	R-003	P	
FWS	3-568-BC	2-ISI-0269-C-01	96E-03	B-G-2	B7.70	VT-1		20020426	R-004	P	
HPCIS	2-47B455H0048-IA	ISI-0275-C-01	96E-03	B-K	B10.20	MT		20030228	R-079	P	
HPCIS	2-47B455H0060	2-ISI-0130-C-01	96E-03	F-A	F1.20C	VT-3		20030204	R-038	P	
HPCIS	2-47B455H0061	2-ISI-0130-C-01	96E-03	F-A	F1.20C	VT-3		20030204	R-039	P	
HPCIS	2-47B455H0065	2-ISI-0130-C-01	P95-96	F-A	F1.20C	VT-3		20030225	R-040	P	IWF-2210(b)
HPCIS	2-47B455H0066	2-ISI-0130-C-02	96E-03	F-A	F1.20C	VT-3		20030204	R-041	P	
HPCIS	2-47B455S0003	ISI-0275-C-01	96E-03	F-A	F1.10B	VT-3		20030227	R-078	P	
HPCIS	2-47B455S0023	ISI-0275-C-01	P95-96	F-A	F1.10D	VT-3		20030306	R-137	P	Pre-service of modified portion - CLAMP. Reference W.O. 03-003454-000.
HPCIS	THPCI-2-066	2-ISI-0273-C-01	96E-03	R-A	R1.11	UT	WB-79	20030301	R-112	P	
HPCIS	THPCI-2-068	2-ISI-0273-C-01	96E-03	R-A	R1.11	UT	WB-79	20030228	R-081	P	
HPCIS	THPCI-2-070	2-ISI-0273-C-01	96E-03	R-A	R1.11	UT	WB-79	20030228	R-080	P	

OWNER: TENNESSEE VALLEY AUTHORITY
NUCLEAR POWER GROUP
1101 MARKET STREET
CHATTANOOGA, TENNESSEE 37402

PLANT: BROWNS FERRY NUCLEAR PLANT
PO BOX 2000
DECATUR, ALABAMA 35609-2000

EXAM REQUIREMENT
96E-03 NO VT-2
P95-96
S01-03

UNIT: TWO CYCLE: 12 COMMERCIAL SERVICE DATE: MARCH 1, 1975

CERTIFICATION OF AUTHORIZATION: NOT REQUIRED
NATIONAL BOARD NUMBER FOR UNIT: NOT REQUIRED

System	Component Number	ISO Drawing	Exreq	Category	Item Number	Exam Scheduled	Calibration Standard	Exam Date	Exam Report	Exam Results	Comments
HPCIS	THPCI-2-075	2-ISI-0273-C-01	96E-03	R-A	R1.11	UT	WB-79	20030303	R-125	P	
HPCIS	THPCI-2-107	ISI-0128-C-01	96E-03	R-A	R1.11	UT	WB-80	20030225	R-059	P	
HPCIS	THPCI-2-109	ISI-0128-C-01	96E-03	R-A	R1.11	UT	WB-80	20030225	R-058	P	
MSS	2-47B400S0039	2-ISI-0279-C-02	96E-03	F-A	F1.10A	VT-3		20030226	R-067	P	
MSS	HPAS-2-H-02	2-ISI-0079-C-02	P95-96	F-A	F1.20C	VT-3		20030227	R-073A &	P	IWF-2220(b)
MSS	HPAS-2-H-07	2-ISI-0079-C-02	P95-96	F-A	F1.20C	VT-3		20030226	R-065	P	IWF-2210(b)
MSS	MS-2-H-14-IA	2-ISI-0079-C-01	96E-03	C-C	C3.20	MT		20030227	R-074	P	
MSS	MSBC-2-01	2-ISI-0312-B-01	96E-03	B-G-2	B7.50	VT-1		20030228	R-083	P	
MSS	MSBC-2-02	2-ISI-0312-B-01	96E-03	B-G-2	B7.50	VT-1		20030228	R-084	P	
MSS	MSBC-2-05	2-ISI-0312-B-01	96E-03	B-G-2	B7.50	VT-1		20030228	R-085	P	
MSS	MSBC-2-07	2-ISI-0312-B-01	96E-03	B-G-2	B7.50	VT-1		20030301	R-091		
MSS	PCV1-2-022	2-ISI-0312-B-01	96E-03	B-M-2	B12.50	VT-3		20030312	R-166	P	Valve Body Casting S/N 1059 Cycle 12
MSS	PCV1-2-022-PBC	2-ISI-0312-B-01	P95-96	B-G-2	B7.50	VT-1		20030302	R-104	P	Pre-service Examination. W. O. 02-006492-000
MSS	PCV1-2-022-PBC	2-ISI-0312-B-01	96E-03	B-G-2	B7.50	VT-1		20030312	R-167	R	3 STUDS AND 21 NUTS WERE ACCEPTABLE. 9 STUDS AND 2 NUTS WERE REJECTABLE FOR THREAD DAMAGE. FASTENERS REPLACED. REFERENCE REPORT # R-104.
MSS	PCV1-2-022-VBC	2-ISI-0312-B-01	96E-03	B-G-2	B7.70	VT-1		20020312	R-168	R	11 STUDS AND 7 NUTS WERE ACCEPTABLE. 1 STUD AND 1 NUT WERE REJECTABLE FOR THREAD DAMAGE. BOLTING REPLACED. REFERENCE REPORT #R-009 AND R-105.
MSS	PCV1-2-022-VBC	2-ISI-0312-B-01	P95-96	B-G-2	B7.70	VT-1		20030302	R-105	P	Pre-service Examination. W. O. 02-006492-000
MSS	PCV1-2-022-VBC	2-ISI-0312-B-01	P95-96	B-G-2	B7.70	VT-1		20021001	R-009	P	Preservice exam. Reference REPORT # R-105
RBCC	2-47B464S0121	ISI-0032-C-01	96E-03	F-A	F1.20A	VT-3		20030122	R-022	P	
RBCC	2-47B464S0228	ISI-0032-C-01	96E-03	F-A	F1.20D	VT-3		20030122	R-023	P	

OWNER: TENNESSEE VALLEY AUTHORITY
NUCLEAR POWER GROUP
1101 MARKET STREET
CHATTANOOGA, TENNESSEE 37402

PLANT: BROWNS FERRY NUCLEAR PLANT
PO BOX 2000
DECATUR, ALABAMA 35609-2000

EXAM REQUIREMENT
96E-03 NO VT-2
P95-96
S01-03

UNIT: TWO CYCLE: 12 COMMERCIAL SERVICE DATE: MARCH 1, 1975

CERTIFICATION OF AUTHORIZATION: NOT REQUIRED
NATIONAL BOARD NUMBER FOR UNIT: NOT REQUIRED

System	Component Number	ISO Drawing	Exreq	Category	Item Number	Exam Scheduled	Calibration Standard	Exam Date	Exam Report	Exam Results	Comments
RBCC	2-47B464S0228-IA	ISI-0032-C-01	96E-03	C-C	C3.20	MT		20030122	R-021	P	
RCICS	2-47B456R0001-IA	2-ISI-0131-C-01	96E-03	C-C	C3.20	MT		20030205	R-042	P	
RCWS	1-47B451S0228	ISI-0391-C-01	96E-03	F-A	F1.30A	VT-3		20030113	R-012	P	
RCWS	1-47B451S0356	ISI-0391-C-01	96E-03	F-A	F1.30B	VT-3		20030113	R-011	P	
RECIR	2-47B408S0044	2-ISI-0278-C-02	96E-03	F-A	F1.40C	VT-3		20030225	R-057	P	
RECIR	2-47B408S0056	2-ISI-0278-C-01	96E-03	F-A	F1.40C	VT-3		20030225	R-056	P	
RECIR	2RB5	2-ISI-0270-C-02	96E-03	R-A	R1.16A	UT	WB-83	20030228	R-093	P	
RECIR	KR-2-24	2-ISI-0270-C-02	96E-03	R-A	R1.16C	UT	WB-83	2002025	R-064	P	
RECIR	KR-2-25	2-ISI-0270-C-02	96E-03	R-A	R1.16C	UT	WB-83	20030226	R-066	P	
RECIR	KR-2-45	2-ISI-0270-C-01	96E-03	R-A	R1.16C	UT	WB-83	20030228	R-087	P	
RECIR	RBC-2-1	2-ISI-0270-C-01	96E-03	B-G-2	B7.50	VT-1		20030225	R-055	P	
RHRS	FCV-74-47	2-ISI-0221-C-01	96E-03	B-M-2	B12.50	VT-3		20030304	R-119	P	Wedge, Stem and Valve internals.
RHRS	RHR-2-R-95	2-ISI-0324-C-09	96E-03	F-A	F1.20D	VT-3		20030122	R-024	P	
RHRS	RHRG-2-07-A	2-ISI-0406-C-01	96E-03	C-A	C1.10	UT	BF-26	20030127	R-027	P	
RHRS	RHRG-2-13-A	2-ISI-0406-C-01	S01-03	F-A	F1.40B	VT-3		20030128	R-026	P	Successive exam.
RHRS	RHRG-2-14-D	2-ISI-0406-C-01	S01-03	F-A	F1.40B	VT-3		20030128	R-025	P	Successive exam.
RHRS	2-17B300S0091	2-ISI-0145-C-01	96E-03	F-A	F1.30A	VT-3		20030114	R-013	P	
RHRS	2-47B450H0043-IA	2-ISI-0145-C-02	96E-03	D-A	D1.20	VT-1		20030115	R-014	P	
RHRS	2-47B450R0028	2-ISI-0145-C-02	96E-03	F-A	F1.30A	VT-3		20030115	R-015	P	
RPV	N1A	2-CHM-2046-C-01	96E-03	B-D	B3.90	UT	BF-18	20030304	R-160	P	Exam performed by Framatome
RPV	N1A-IR	2-CHM-2046-C-01	96E-03	B-D	B3.100	VT-1E		20030307	R-169	P	REFERENCE REQUEST FOR RELIEF 2-ISI-16. VENDOR PROCEDURE 54-ISI-363 REV. 00
RPV	N2B	2-CHM-2046-C-01	96E-03	B-D	B3.90	UT	BF-18	20030303	R-161	P	Exam performed by Framatome

OWNER: TENNESSEE VALLEY AUTHORITY
NUCLEAR POWER GROUP
1101 MARKET STREET
CHATTANOOGA, TENNESSEE 37402

PLANT: BROWNS FERRY NUCLEAR PLANT
PO BOX 2000
DECATUR, ALABAMA 35609-2000

EXAM REQUIREMENT
96E-03 NO VT-2
P95-96
S01-03

UNIT: TWO CYCLE: 12 COMMERCIAL SERVICE DATE: MARCH 1, 1975

CERTIFICATION OF AUTHORIZATION: NOT REQUIRED
NATIONAL BOARD NUMBER FOR UNIT: NOT REQUIRED

System	Component Number	ISO Drawing	Exreq	Category	Item Number	Exam Scheduled	Calibration Standard	Exam Date	Exam Report	Exam Results	Comments
RPV	N2B-IR	2-CHM-2046-C-01	96E-03	B-D	B3.100	VT-1E		20030307	R-169	P	REFERENCE REQUEST FOR RELIEF 2-ISI-17. VENDOR PROCEDURE 54-ISI-363 REV. 00
RPV	N2F	2-CHM-2046-C-01	96E-03	B-D	B3.90	UT	BF-18		R-162	P	Exam performed by Framatome
RPV	N2F-IR	2-CHM-2046-C-01	96E-03	B-D	B3.100	VT-1E		20030307	R-169	P	REFERENCE REQUEST FOR RELIEF 2-ISI-17. VENDOR PROCEDURE 54-ISI-363 REV. 00
RPV	N2J	2-CHM-2046-C-01	96E-03	B-D	B3.90	UT	BF-18	20030303	R-163	P	Exam performed by Framatome
RPV	N2J-IR	2-CHM-2046-C-01	96E-03	B-D	B3.100	VT-1E		20030307	R-169	P	REFERENCE REQUEST FOR RELIEF 2-ISI-17. VENDOR PROCEDURE 54-ISI-363 REV. 00
RPV	N3D	2-CHM-2046-C-01	96E-03	B-D	B3.90	UT	BF-18	20030301	R-164	P	Exam performed by Framatome
RPV	N3D-IR	2-CHM-2046-C-01	96E-03	B-D	B3.100	VT-1E		20030307	R-169	P	REFERENCE REQUEST FOR RELIEF 2-ISI-16. VENDOR PROCEDURE 54-ISI-363 REV. 00
RPV	N4A	2-CHM-2046-C-01	96E-03	B-D	B3.90	UT	BF-18	20020302	R-141	P	Exam performed by Framatome
RPV	N4A-IR	2-CHM-2046-C-01	96E-03	B-D	B3.100	UT	BF-18	20030302	R-141	P	Exam performed by Framatome
RPV	N4B	2-CHM-2046-C-01	96E-03	B-D	B3.90	UT		20030304	R-142	P	Exam performed by Framatome
RPV	N4B-IR	2-CHM-2046-C-01	96E-03	B-D	B3.100	UT	BF-18	20030304	R-142	P	Exam performed by Framatome
RPV	N4C	2-CHM-2046-C-01	96E-03	B-D	B3.90	UT	BF-18	20030301	R-143	P	Exam performed by Framatome
RPV	N4C-IR	2-CHM-2046-C-01	96E-03	B-D	B3.100	UT		20030301	R-143	P	Exam performed by Framatome
RPV	N4D	2-CHM-2046-C-01	96E-03	B-D	B3.90	UT	BF-18	20030304	R-144	P	Exam performed by Framatome
RPV	N4D-IR	2-CHM-2046-C-01	96E-03	B-D	B3.100	UT	BF-18	20030304	R-144	P	Exam performed by Framatome
RPV	N4E	2-CHM-2046-C-01	96E-03	B-D	B3.90	UT	BF-18	20030302	R-145	P	Exam performed by Framatome
RPV	N4E-IR	2-CHM-2046-C-01	96E-03	B-D	B3.100	UT	BF-18	20030302	R-145	P	Exam performed by Framatome
RPV	N4F	2-CHM-2046-C-01	96E-03	B-D	B3.90	UT	BF-18	20030304	R-146	P	Exam performed by Framatome
RPV	N4F-IR	2-CHM-2046-C-01	96E-03	B-D	B3.100	UT	BF-18	20030304	R-146	P	Exam performed by Framatome
RPV	N6A-IR	ISI-0408-C-01	96E-03	B-D	B3.100	VT-1E		20030301	R-106	P	REFERENCE REQUEST FOR RELIEF 2-ISI-16

OWNER: TENNESSEE VALLEY AUTHORITY
NUCLEAR POWER GROUP
1101 MARKET STREET
CHATTANOOGA, TENNESSEE 37402

EXAM REQUIREMENT
96E-03 NO VT-2
P95-96
S01-03

PLANT: BROWNS FERRY NUCLEAR PLANT
PO BOX 2000
DECATUR, ALABAMA 35609-2000

UNIT: TWO CYCLE: 12 COMMERCIAL SERVICE DATE: MARCH 1, 1975

CERTIFICATION OF AUTHORIZATION: NOT REQUIRED
NATIONAL BOARD NUMBER FOR UNIT: NOT REQUIRED

System	Component Number	ISO Drawing	Exreq	Category	Item Number	Exam Scheduled	Calibration Standard	Exam Date	Exam Report	Exam Results	Comments
RPV	N6A-NV	ISI-0408-C-01	96E-03	B-D	B3.90	UT	BF-19& B	20030228	R-110	P	
RPV	N8A	2-CHM-2046-C-01	96E-03	B-D	B3.90	UT	BF-18	20030305	R-165	P	Exam performed by Framatome
RPV	N8A-IR	2-CHM-2046-C-01	96E-03	B-D	B3.100	VT-1E		20030307	R-169	P	REFERENCE REQUEST FOR RELIEF 2-ISI-17. VENDOR PROCEDURE 54-ISI-363 REV. 00
RPV	RCH-2-1C	ISI-0408-C-01	96E-03	B-A	B1.21	UT	BF-19	20030228	R-115	P	
RPV	RCH-2-1V	ISI-0408-C-01	96E-03	B-A	B1.22	UT	BF-19	20030301	R-113	P	
RPV	RCH-2-2V	ISI-0408-C-01	96E-03	B-A	B1.22	UT	BF-19	20030301	R-114	P	
RPV	RPV-INTERIOR	2-CHM-2046-C-02	96E-03	B-N-1	B13.10	VT-3		20030307	R-169	P	Vendor Procedure 54-ISI-363-00
RPV	RPV-NUTS-2-01	ISI-0266-C-01	96E-03	B-G-1	B6.10	VT-1		20030301	R-103	P	
RPV	RPV-NUTS-2-02	ISI-0266-C-01	96E-03	B-G-1	B6.10	VT-1		20030301	R-103	P	
RPV	RPV-NUTS-2-03	ISI-0266-C-01	96E-03	B-G-1	B6.10	VT-1		20030301	R-103	P	
RPV	RPV-NUTS-2-04	ISI-0266-C-01	96E-03	B-G-1	B6.10	VT-1		20030301	R-103	P	
RPV	RPV-NUTS-2-05	ISI-0266-C-01	96E-03	B-G-1	B6.10	VT-1		20030301	R-103	P	
RPV	RPV-NUTS-2-06	ISI-0266-C-01	96E-03	B-G-1	B6.10	VT-1		20030301	R-103	P	
RPV	RPV-NUTS-2-07	ISI-0266-C-01	96E-03	B-G-1	B6.10	VT-1		20030301	R-103	P	
RPV	RPV-NUTS-2-08	ISI-0266-C-01	96E-03	B-G-1	B6.10	VT-1		20030301	R-103	P	
RPV	RPV-NUTS-2-09	ISI-0266-C-01	96E-03	B-G-1	B6.10	VT-1		20030301	R-103	P	
RPV	RPV-NUTS-2-10	ISI-0266-C-01	96E-03	B-G-1	B6.10	VT-1		20030301	R-103	P	
RPV	RPV-NUTS-2-11	ISI-0266-C-01	96E-03	B-G-1	B6.10	VT-1		20030301	R-103	P	
RPV	RPV-NUTS-2-12	ISI-0266-C-01	96E-03	B-G-1	B6.10	VT-1		20030301	R-103	P	
RPV	RPV-NUTS-2-13	ISI-0266-C-01	96E-03	B-G-1	B6.10	VT-1		20030301	R-103	P	
RPV	RPV-NUTS-2-14	ISI-0266-C-01	96E-03	B-G-1	B6.10	VT-1		20030301	R-103	P	
RPV	RPV-NUTS-2-15	ISI-0266-C-01	96E-03	B-G-1	B6.10	VT-1		20030301	R-103	P	

OWNER: TENNESSEE VALLEY AUTHORITY
NUCLEAR POWER GROUP
1101 MARKET STREET
CHATTANOOGA, TENNESSEE 37402

PLANT: BROWNS FERRY NUCLEAR PLANT
PO BOX 2000
DECATUR, ALABAMA 35609-2000

EXAM REQUIREMENT
96E-03 NO VT-2
P95-96
S01-03

UNIT: TWO CYCLE: 12 COMMERCIAL SERVICE DATE: MARCH 1, 1975

CERTIFICATION OF AUTHORIZATION: NOT REQUIRED
NATIONAL BOARD NUMBER FOR UNIT: NOT REQUIRED

System	Component Number	ISO Drawing	Exreq	Category	Item Number	Exam Scheduled	Calibration Standard	Exam Date	Exam Report	Exam Results	Comments
RPV	RPV-NUTS-2-16	ISI-0266-C-01	96E-03	B-G-1	B6.10	VT-1		20030301	R-103	P	
RPV	RPV-NUTS-2-17	ISI-0266-C-01	96E-03	B-G-1	B6.10	VT-1		20030301	R-103	P	
RPV	RPV-NUTS-2-18	ISI-0266-C-01	96E-03	B-G-1	B6.10	VT-1		20030301	R-103	P	
RPV	RPV-NUTS-2-19	ISI-0266-C-01	96E-03	B-G-1	B6.10	VT-1		20030301	R-103	P	
RPV	RPV-NUTS-2-20	ISI-0266-C-01	96E-03	B-G-1	B6.10	VT-1		20030301	R-103	P	
RPV	RPV-NUTS-2-21	ISI-0266-C-01	96E-03	B-G-1	B6.10	VT-1		20030301	R-103	P	
RPV	RPV-NUTS-2-22	ISI-0266-C-01	96E-03	B-G-1	B6.10	VT-1		20030301	R-103	P	
RPV	RPV-NUTS-2-23	ISI-0266-C-01	96E-03	B-G-1	B6.10	VT-1		20030301	R-103	P	
RPV	RPV-NUTS-2-24	ISI-0266-C-01	96E-03	B-G-1	B6.10	VT-1		20030301	R-103	P	
RPV	RPV-NUTS-2-25	ISI-0266-C-01	96E-03	B-G-1	B6.10	VT-1		20030301	R-103	P	
RPV	RPV-NUTS-2-26	ISI-0266-C-01	96E-03	B-G-1	B6.10	VT-1		20030301	R-103	P	
RPV	RPV-NUTS-2-27	ISI-0266-C-01	96E-03	B-G-1	B6.10	VT-1		20030301	R-103	P	
RPV	RPV-NUTS-2-28	ISI-0266-C-01	96E-03	B-G-1	B6.10	VT-1		20030301	R-103	P	
RPV	RPV-NUTS-2-29	ISI-0266-C-01	96E-03	B-G-1	B6.10	VT-1		20030301	R-103	P	
RPV	RPV-NUTS-2-30	ISI-0266-C-01	96E-03	B-G-1	B6.10	VT-1		20030301	R-103	P	
RPV	RPV-STAB-2-1	ISI-0415-C-01	96E-03	F-A	F1.40C	VT-3		20030307	R-147	P	
RPV	RPV-STAB-2-1A-IA	ISI-0415-C-01	96E-03	B-K	B10.10	PT		20030308	R-148	P	
RPV	RPV-STAB-2-1B-IA	ISI-0415-C-01	96E-03	B-K	B10.10	PT		20030308	R-149	P	
RPV	RPV-STAB-2-1C-IA	ISI-0415-C-01	96E-03	B-K	B10.10	PT		20030308	R-150	P	
RPV	RPV-STAB-2-1D-IA	ISI-0415-C-01	96E-03	B-K	B10.10	PT		20030308	R-151	P	
RPV	RPV-STAB-2-1E-IA	ISI-0415-C-01	96E-03	B-K	B10.10	PT		20030308	R-152	P	
RPV	RPV-STAB-2-1F-IA	ISI-0415-C-01	96E-03	B-K	B10.10	PT		20030308	R-153	P	

OWNER: TENNESSEE VALLEY AUTHORITY
NUCLEAR POWER GROUP
1101 MARKET STREET
CHATTANOOGA, TENNESSEE 37402

PLANT: BROWNS FERRY NUCLEAR PLANT
PO BOX 2000
DECATUR, ALABAMA 35609-2000

EXAM REQUIREMENT
96E-03 NO VT-2
P95-96
S01-03

UNIT: TWO CYCLE: 12 COMMERCIAL SERVICE DATE: MARCH 1, 1975

CERTIFICATION OF AUTHORIZATION: NOT REQUIRED
NATIONAL BOARD NUMBER FOR UNIT: NOT REQUIRED

System	Component Number	ISO Drawing	Exreq	Category	Item Number	Exam Scheduled	Calibration Standard	Exam Date	Exam Report	Exam Results	Comments
RPV	RPV-STAB-2-1G-IA	ISI-0415-C-01	96E-03	B-K	B10.10	PT		20030308	R-154	P	
RPV	RPV-STAB-2-1H-IA	ISI-0415-C-01	96E-03	B-K	B10.10	PT		20030308	R-155	P	
RPV	RPV-WASH-2-01	ISI-0266-C-01	96E-03	B-G-1	B6.50	VT-1		20030301	R-102	P	
RPV	RPV-WASH-2-02	ISI-0266-C-01	96E-03	B-G-1	B6.50	VT-1		20030301	R-102	P	
RPV	RPV-WASH-2-03	ISI-0266-C-01	96E-03	B-G-1	B6.50	VT-1		20030301	R-102	P	
RPV	RPV-WASH-2-04	ISI-0266-C-01	96E-03	B-G-1	B6.50	VT-1		20030301	R-102	P	
RPV	RPV-WASH-2-05	ISI-0266-C-01	96E-03	B-G-1	B6.50	VT-1		20030301	R-102	P	
RPV	RPV-WASH-2-06	ISI-0266-C-01	96E-03	B-G-1	B6.50	VT-1		20030301	R-102	P	
RPV	RPV-WASH-2-07	ISI-0266-C-01	96E-03	B-G-1	B6.50	VT-1		20030301	R-102	P	
RPV	RPV-WASH-2-08	ISI-0266-C-01	96E-03	B-G-1	B6.50	VT-1		20030301	R-102	P	
RPV	RPV-WASH-2-09	ISI-0266-C-01	96E-03	B-G-1	B6.50	VT-1		20030301	R-102	P	
RPV	RPV-WASH-2-10	ISI-0266-C-01	96E-03	B-G-1	B6.50	VT-1		20030301	R-102	P	
RPV	RPV-WASH-2-11	ISI-0266-C-01	96E-03	B-G-1	B6.50	VT-1		20030301	R-102	P	
RPV	RPV-WASH-2-12	ISI-0266-C-01	96E-03	B-G-1	B6.50	VT-1		20030301	R-102	P	
RPV	RPV-WASH-2-13	ISI-0266-C-01	96E-03	B-G-1	B6.50	VT-1		20030301	R-102	P	
RPV	RPV-WASH-2-14	ISI-0266-C-01	96E-03	B-G-1	B6.50	VT-1		20030301	R-102	P	
RPV	RPV-WASH-2-15	ISI-0266-C-01	96E-03	B-G-1	B6.50	VT-1		20030301	R-102	P	
RPV	RPV-WASH-2-16	ISI-0266-C-01	96E-03	B-G-1	B6.50	VT-1		20030301	R-102	P	
RPV	RPV-WASH-2-17	ISI-0266-C-01	96E-03	B-G-1	B6.50	VT-1		20030301	R-102	P	
RPV	RPV-WASH-2-18	ISI-0266-C-01	96E-03	B-G-1	B6.50	VT-1		20030301	R-102	P	
RPV	RPV-WASH-2-19	ISI-0266-C-01	96E-03	B-G-1	B6.50	VT-1		20030301	R-102	P	
RPV	RPV-WASH-2-20	ISI-0266-C-01	96E-03	B-G-1	B6.50	VT-1		20030301	R-102	P	

OWNER: TENNESSEE VALLEY AUTHORITY
NUCLEAR POWER GROUP
1101 MARKET STREET
CHATTANOOGA, TENNESSEE 37402

PLANT: BROWNS FERRY NUCLEAR PLANT
PO BOX 2000
DECATUR, ALABAMA 35609-2000

EXAM REQUIREMENT
96E-03 NO VT-2
P95-96
S01-03

CERTIFICATION OF AUTHORIZATION: NOT REQUIRED

UNIT: TWO CYCLE: 12 COMMERCIAL SERVICE DATE: MARCH 1, 1975 NATIONAL BOARD NUMBER FOR UNIT: NOT REQUIRED

System	Component Number	ISO Drawing	Exreq	Category	Item Number	Exam Scheduled	Calibration Standard	Exam Date	Exam Report	Exam Results	Comments
RPV	RPV-WASH-2-21	ISI-0266-C-01	96E-03	B-G-1	B6.50	VT-1		20030301	R-102	P	
RPV	RPV-WASH-2-22	ISI-0266-C-01	96E-03	B-G-1	B6.50	VT-1		20030301	R-102	P	
RPV	RPV-WASH-2-23	ISI-0266-C-01	96E-03	B-G-1	B6.50	VT-1		20030301	R-102	P	
RPV	RPV-WASH-2-24	ISI-0266-C-01	96E-03	B-G-1	B6.50	VT-1		20030301	R-102	P	
RPV	RPV-WASH-2-25	ISI-0266-C-01	96E-03	B-G-1	B6.50	VT-1		20030301	R-102	P	
RPV	RPV-WASH-2-26	ISI-0266-C-01	96E-03	B-G-1	B6.50	VT-1		20030301	R-102	P	
RPV	RPV-WASH-2-27	ISI-0266-C-01	96E-03	B-G-1	B6.50	VT-1		20030301	R-102	P	
RPV	RPV-WASH-2-28	ISI-0266-C-01	96E-03	B-G-1	B6.50	VT-1		20030301	R-102	P	
RPV	RPV-WASH-2-29	ISI-0266-C-01	96E-03	B-G-1	B6.50	VT-1		20030301	R-102	P	
RPV	RPV-WASH-2-30	ISI-0266-C-01	96E-03	B-G-1	B6.50	VT-1		20030301	R-102	P	
RWCU	RWCU-2-003-G003	2-ISI-0272-C-01	96E-03	R-A	R1.16A	UT	WB-83	20030304	R-124	P	

OWNER: TENNESSEE VALLEY AUTHORITY OFFICE OF NUCLEAR POWER 1101 MARKET STREET CHATTANOOGA, TENNESSEE 37402	PLANT: BROWNS FERRY NUCLEAR PLANT P.O. BOX 2000 DECATUR, ALABAMA 35609-2000
UNIT: TWO	CERTIFICATE OF AUTHORIZATION: NOT REQUIRED.
COMMERCIAL SERVICE DATE: MARCH 1, 1975	
NATIONAL BOARD NUMBER FOR UNIT: NOT REQUIRED.	

ASME SECTION XI PRESSURE TESTS CLASS 1, 2, AND 3

OWNER: TENNESSEE VALLEY AUTHORITY
NUCLEAR POWER GROUP
1101 MARKET STREET
CHATTANOOGA, TENNESSEE 37402

PLANT: BROWNS FERRY NUCLEAR PLANT
PO BOX 2000
DECATUR, ALABAMA 35609-2000

EXAM REQUIREMENT
96E-03 VT-2

UNIT: TWO CYCLE: 12

COMMERCIAL SERVICE DATE: MARCH 1, 1975

CERTIFICATION OF AUTHORIZATION: NOT REQUIRED
NATIONAL BOARD NUMBER FOR UNIT: NOT REQUIRED

System	Component Number	ISO Drawing	Exreq	Category	Item Number	Exam Scheduled	NDE Procedure	Exam Date	Exam Report	Exam Results	Comments
CRDS	2-SI-3.3.1.D	N/A	96E-03	C-H	C7.30	VT-2	N-VT-4	20020505	R-030	P	
CRDS	2-SI-3.3.1.D	N/A	96E-03	C-H	C7.70	VT-2	N-VT-4	20030505	R-030	P	
CRDS	2-SI-3.3.7	N/A	96E-03	C-H	C7.10	VT-2	N-VT-4	20020919	R-007	P	
CRDS	2-SI-3.3.7	N/A	96E-03	C-H	C7.30	VT-2	N-VT-4	20020919	R-007	P	
CRDS	2-SI-3.3.7	N/A	96E-03	C-H	C7.70	VT-2	N-VT-4	20020919	R-007	P	
EECW	2-SI-3.3.14A	N/A	96E-03	D-B	D2.30	VT-2	N-VT-4	20021002	R-008	P	
EECW	2-SI-3.3.14A	N/A	96E-03	D-B	D2.50	VT-2	N-VT-4	20021002	R-008	P	
EECW	2-SI-3.3.14A	N/A	96E-03	D-B	D2.70	VT-2	N-VT-4	20021002	R-008	P	
EECW	2-SI-3.3.14B	N/A	96E-03	D-B	D2.10	VT-2	N-VT-4	20021112	R-010	P	
EECW	2-SI-3.3.14B	N/A	96E-03	D-B	D2.30	VT-2	N-VT-4	20021112	R-010	P	
EECW	2-SI-3.3.14B	N/A	96E-03	D-B	D2.50	VT-2	N-VT-4	20021112	R-010	P	
EECW	2-SI-3.3.14B	N/A	96E-03	D-B	D2.70	VT-2	N-VT-4	20021112	R-010	P	
FPCS	2-SI-3.3.3	N/A	96E-03	C-H	C7.30	VT-2	N-VT-4	20030303	R-060	P	
FPCS	2-SI-3.3.3	N/A	96E-03	C-H	C7.70	VT-2	N-VT-4	20030303	R-060	P	
HPCIS	2-SI-3.3.09	N/A	96E-03	C-H	C7.30	VT-2	N-VT-4	20030504	R-016	P	
HPCIS	2-SI-3.3.09	N/A	96E-03	C-H	C7.50	VT-2	N-VT-4	20030504	R-016	P	
HPCIS	2-SI-3.3.09	N/A	96E-03	C-H	C7.70	VT-2	N-VT-4	20030504	R-016	P	
MSS	2-SI-3.3.1.C	N/A	96E-03	C-H	C7.30	VT-2	N-VT-4	20030505	R-051	P	
MSS	2-SI-3.3.1.C	N/A	96E-03	C-H	C7.70	VT-2	N-VT-4	20030505	R-051	P	
PCONT	2-SI-3.3.15	N/A	96E-03	C-H	C7.30	VT-2	N-VT-4	20010719	R-001	P	
PCONT	2-SI-3.3.15	N/A	96E-03	C-H	C7.70	VT-2	N-VT-4	20010719	R-001	P	
RADW	2-SI-3.3.2.A	N/A	96E-03	C-H	C7.30	VT-2	N-VT-4	20030314	R-062	P	

OWNER: TENNESSEE VALLEY AUTHORITY
NUCLEAR POWER GROUP
1101 MARKET STREET
CHATTANOOGA, TENNESSEE 37402

PLANT: BROWNS FERRY NUCLEAR PLANT
PO BOX 2000
DECATUR, ALABAMA 35609-2000

EXAM REQUIREMENT
96E-03 VT-2

UNIT: TWO CYCLE: 12 COMMERCIAL SERVICE DATE: MARCH 1, 1975

CERTIFICATION OF AUTHORIZATION: NOT REQUIRED
NATIONAL BOARD NUMBER FOR UNIT: NOT REQUIRED

System	Component Number	ISO Drawing	Exreq	Category	Item Number	Exam Scheduled	NDE Procedure	Exam Date	Exam Report	Exam Results	Comments
RADW	2-SI-3.3.2.A	N/A	96E-03	C-H	C7.70	VT-2	N-VT-4	20030314	R-062	P	
RADW	2-SI-3.3.2.B	N/A	96E-03	C-H	C7.30	VT-2	N-VT-4	20030314	R-063	P	
RADW	2-SI-3.3.2.B	N/A	96E-03	C-H	C7.70	VT-2	N-VT-4	20030314	R-063	P	
RCICS	2-SI-3.3.10	N/A	96E-03	C-H	C7.30	VT-2	N-VT-4	20020816	R-006	P	
RCICS	2-SI-3.3.10	N/A	96E-03	C-H	C7.50	VT-2	N-VT-4	20020816	R-006	P	
RCICS	2-SI-3.3.10	N/A	96E-03	C-H	C7.70	VT-2	N-VT-4	20020816	R-006	P	
RHR	2-SI-3.3.8.C	N/A	96E-03	C-H	C7.10	VT-2	N-VT-4	20020806	R-005	P	
RHR	2-SI-3.3.8.C	N/A	96E-03	C-H	C7.30	VT-2	N-VT-4	20020806	R-005	P	
RHR	2-SI-3.3.8.C	N/A	96E-03	C-H	C7.50	VT-2	N-VT-4	20020806	R-005	P	
RHR	2-SI-3.3.8.C	N/A	96E-03	C-H	C7.70	VT-2	N-VT-4	20020806	R-005	P	
RHRS	2-SI-3.3.8.A	N/A	96E-03	C-H	C7.10	VT-2	N-VT-4	20020509	R-002	P	
RHRS	2-SI-3.3.8.A	N/A	96E-03	C-H	C7.30	VT-2	N-VT-4	20020509	R-002	P	
RHRS	2-SI-3.3.8.A	N/A	96E-03	C-H	C7.50	VT-2	N-VT-4	20020509	R-002	P	
RHRS	2-SI-3.3.8.A	N/A	96E-03	C-H	C7.70	VT-2	N-VT-4	20020509	R-002	P	
RHRS	2-SI-3.3.8.A	N/A	96E-03	D-B	D2.30	VT-2	N-VT-4	20020509	R-002	P	
RHRS	2-SI-3.3.8.A	N/A	96E-03	D-B	D2.70	VT-2	N-VT-4	20020509	R-002	P	
RHRS	2-SI-3.3.8.B	N/A	96E-03	C-H	C7.10	VT-2	N-VT-4	20030227	R-054	P	
RHRS	2-SI-3.3.8.B	N/A	96E-03	C-H	C7.30	VT-2	N-VT-4	20030227	R-054	P	
RHRS	2-SI-3.3.8.B	N/A	96E-03	C-H	C7.50	VT-2	N-VT-4	20030227	R-054	P	
RHRS	2-SI-3.3.8.B	N/A	96E-03	C-H	C7.70	VT-2	N-VT-4	20030227	R-054	P	
RHRS	DRHR-2-03B	2-ISI-0221-C-01	96E-03	R-A	R1.16G	VT-2	N-VT-4	20030424	R-158	P	
RHRS	DRHR-2-13B	2-ISI-0221-C-01	96E-03	R-A	R1.16G	VT-2	N-VT-4	20030424	R-158	P	

OWNER: TENNESSEE VALLEY AUTHORITY
NUCLEAR POWER GROUP
1101 MARKET STREET
CHATTANOOGA, TENNESSEE 37402

PLANT: BROWNS FERRY NUCLEAR PLANT
PO BOX 2000
DECATUR, ALABAMA 35609-2000

EXAM REQUIREMENT
96E-03 VT-2

UNIT: TWO CYCLE: 12 COMMERCIAL SERVICE DATE: MARCH 1, 1975

CERTIFICATION OF AUTHORIZATION: NOT REQUIRED
NATIONAL BOARD NUMBER FOR UNIT: NOT REQUIRED

System	Component Number	ISO Drawing	Exreq	Category	Item Number	Exam Scheduled	NDE Procedure	Exam Date	Exam Report	Exam Results	Comments
RHRS	RHRG-2-05-A	2-ISI-0406-C-01	96E-03	C-B	C2.33	VT-2	N-VT-4	20020509	R-002	P	
RHRS	RHRG-2-06-A	2-ISI-0406-C-01	96E-03	C-B	C2.33	VT-2	N-VT-4	20020509	R-002	P	
RPV	2-SI-3.3.1.A	N/A	96E-03	B-P	B15.10	VT-2	N-VT-4	20030424	R-158	P	
RPV	2-SI-3.3.1.A	N/A	96E-03	B-P	B15.50	VT-2	N-VT-4	20030424	R-158	P	
RPV	2-SI-3.3.1.A	N/A	96E-03	B-P	B15.60	VT-2	N-VT-4	20030424	R-158	P	
RPV	2-SI-3.3.1.A	N/A	96E-03	B-P	B15.70	VT-2	N-VT-4	20030424	R-158	P	
SLCS	2-SI-3.3.4	N/A	96E-03	C-H	C7.30	VT-2	N-VT-4	20030314	R-061	P	
SLCS	2-SI-3.3.4	N/A	96E-03	C-H	C7.50	VT-2	N-VT-4	20030314	R-061	P	
SLCS	2-SI-3.3.4	N/A	96E-03	C-H	C7.70	VT-2	N-VT-4	20030314	R-061	P	

OWNER: TENNESSEE VALLEY AUTHORITY OFFICE OF NUCLEAR POWER 1101 MARKET STREET CHATTANOOGA, TENNESSEE 37402	PLANT: BROWNS FERRY NUCLEAR PLANT P.O. BOX 2000 DECATUR, ALABAMA 35609-2000
UNIT: TWO	CERTIFICATE OF AUTHORIZATION: NOT REQUIRED.
COMMERCIAL SERVICE DATE: MARCH 1, 1975	
NATIONAL BOARD NUMBER FOR UNIT: NOT REQUIRED.	

ISOMETRICS FOR COMPONENT LOCATIONS

REFERENCE DRAWINGS:

47N2054
47W464-H SERIES
47N2464-200 THRU 203
47B2464-11, 18, 31, 41

LEGEND:

- RIGID HANGER
- MECHANICAL SNUBBER
- RIGID STRUT

ASME CC-2 (EQUIVALENT)

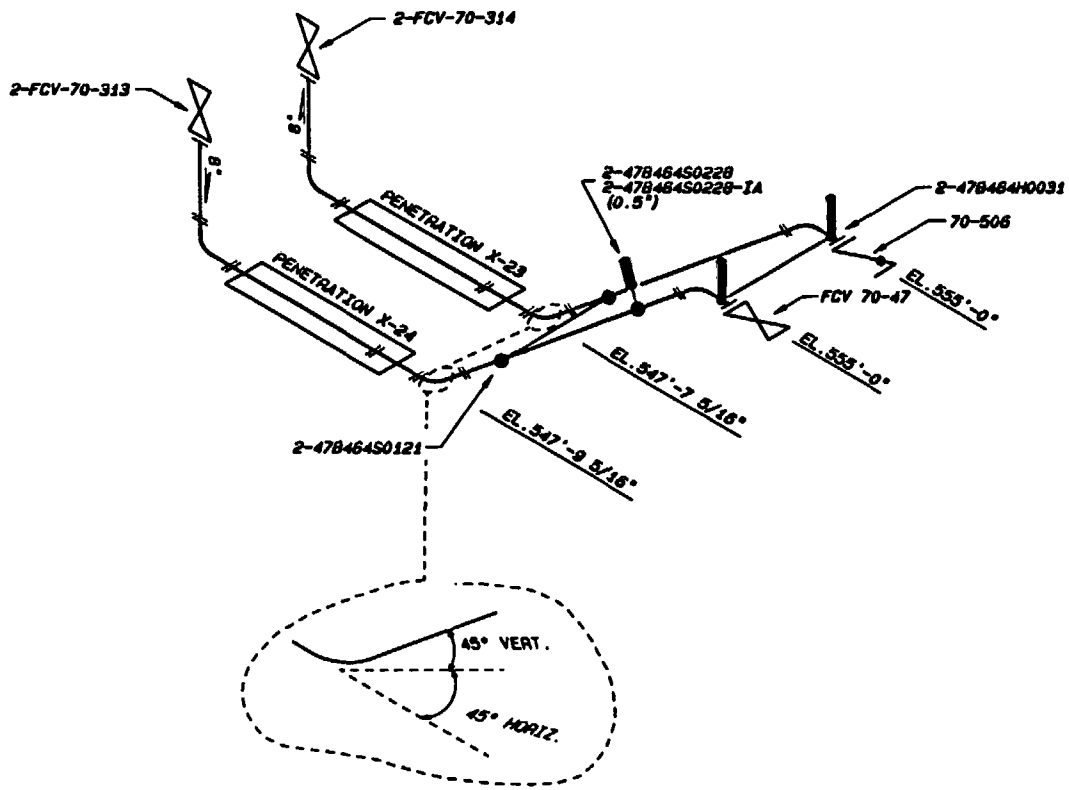

ALL A/D HISTORY RESEARCHED TO R000

REV	CHANGE REF	PREPARER	CHECKER	APPROVED	DATE
001	ADMIN	RC PHILLIPS	WCH	GLD	12-10-02
REVISED PER RIMS MEMO R14 021202 103					

TENNESSEE VALLEY AUTHORITY

BROWNS FERRY NUCLEAR PLANT
UNIT #2

REACTOR BUILDING CLOSED COOLING WATER SYSTEM
SUPPORT LOCATIONS

DRAWN: REV	SUBMITTED	APPROVED	SCALE: NTS
DATE:	DATE:	DATE:	SHEET 01 OF 01 SHEET(S)
PREPARE:		GLB	DRAWING NO. 2-1S1-0032-C
DATE:			REV 001

CAD MAINTAINED DRAWING

CCD

MF-RM

CALCULATION BRANCH/PROJECT IDENTIFIER:
CD-02085-890156

REFERENCE DRAWINGS
47W2468 SERIES
1S1-0040-C (SH. 1) WELD MAP

LEGEND
- ANCHOR
- RIGID HANGER
- RIGID STRUT

ASME CC-2 (EQUIVALENT)

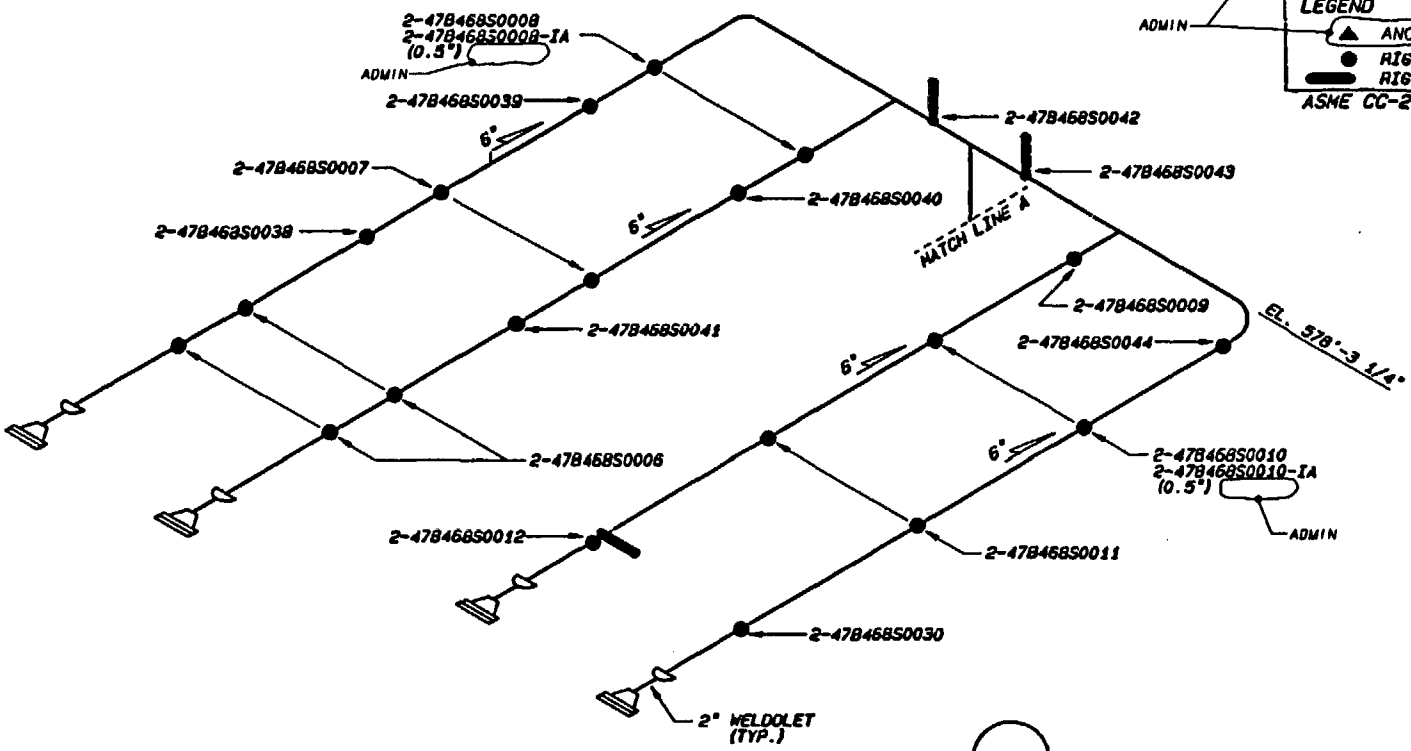

EAST HEADER

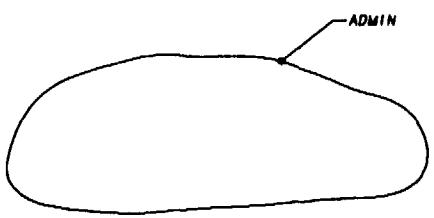

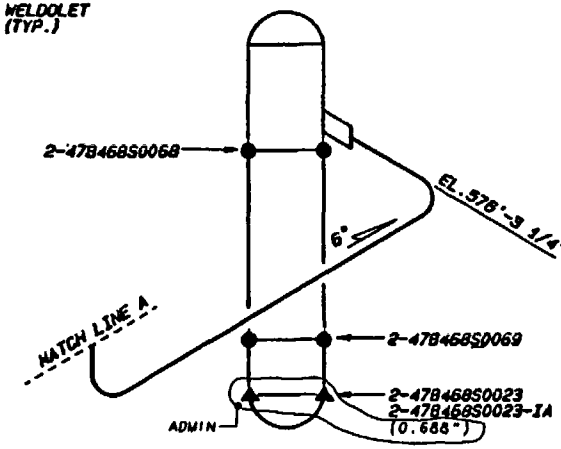

SCRAM DISCHARGE INSTRUMENT VOLUME TANK

REV	CHANGE REF	DATE	DFTR	CHKR	DSGN	RVWR	APPD	APPD	APPD	ISSD
000	CCD ADMIN		BCC		N/A		N/A	N/A		
	ISSUED TO CREATE CCD. SUPERSEDES A/D 1S1-0041-C-1 R4 AND TO DEPICT AS-CONSTRUCTED STATUS PER A/D R0 THRU R3; RIMS MEMO RAX 940424 664 [ADMINISTRATIVE REVISION]									

HARDWARE: TEK 4129 | SOFTWARE: TECHCAD | 8" PLOTTER: HP-3

TENNESSEE VALLEY AUTHORITY

S BROWNS FERRY NUCLEAR PLANT
UNIT #2

CONTROL ROD DRIVE SCRAM DISCHARGE SYSTEM
SUPPORT LOCATIONS

DRAWN REV	SUBMITTED	APPROVED	SCALE: N/A
DATE - - -	DATE - - -	DATE - - -	SHEET 01 OF 02 SHEET(S)
CHECKED JTL		GLB	DRAWING NO. 2-1S1-0041-C REV 000
DATE			

CCD

PROCAD

ALL A/D HISTORY RESEARCHED AT R000

CALCULATION BRANCH/ PROJECT IDENTIFIER: CD-02085-890156

REFERENCE DRAWINGS: 47W2460 SERIES

LEGEND:
- RIGID HANGER
- RIGID STRUT
- ANCHOR

ASME CC-2 (EQUIVALENT)

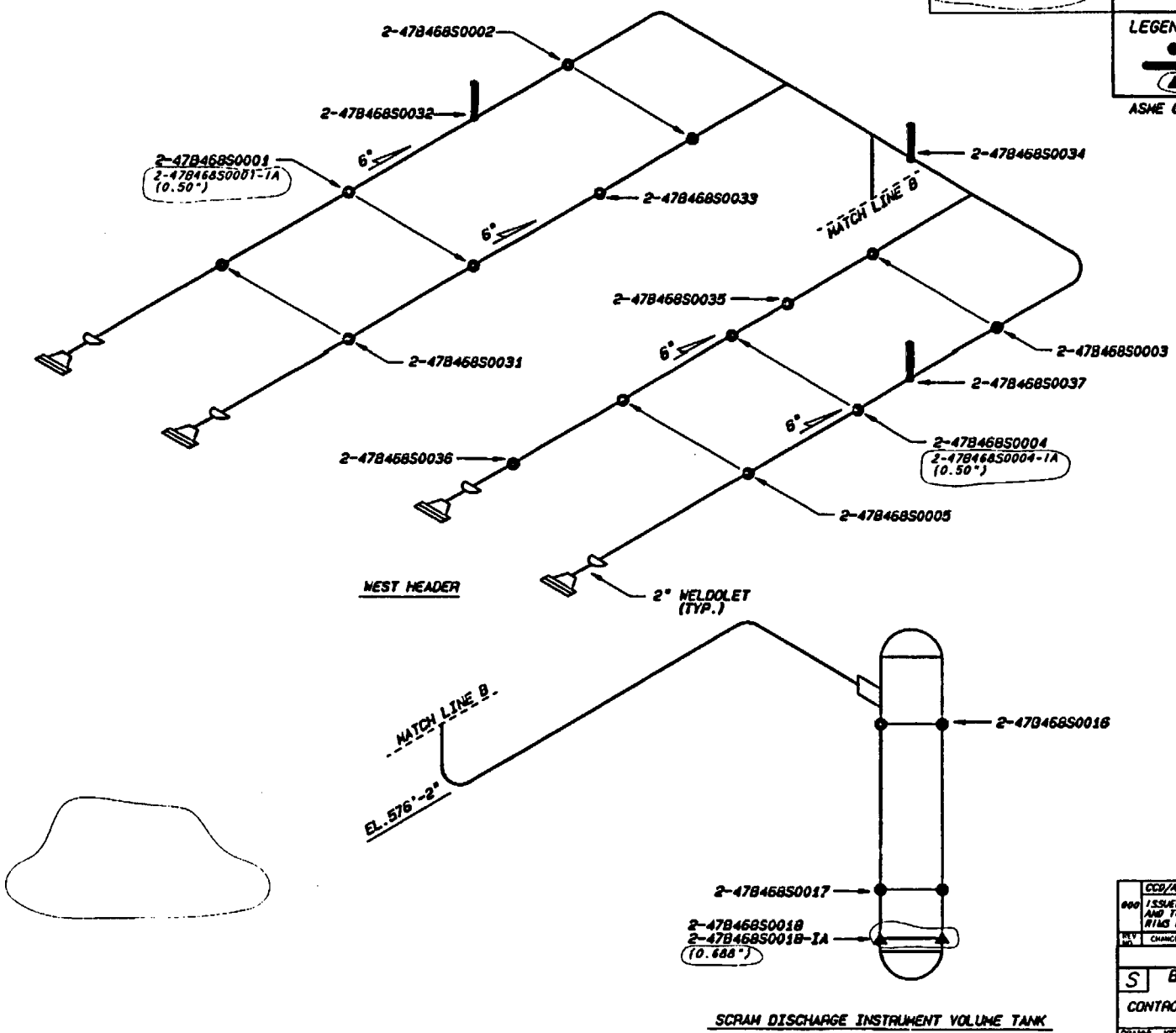

REV NO.	CHANGE REF	DATE	DFTR	CHKR	DSGN	RVWR	APPD	APPD	APPD	ISSD
	CCD/ADMIN		KML		N/A		N/A	N/A		
000	ISSUED TO CREATE CCD. SUPERSEDES A/D 1S1-0041-C-2 R5 AND TO DEPICT AS-CONSTRUCTED STATUS PER A/D RO THRU R4; RIMS MEMO RSZ 940424 864 (ADMINISTRATIVE REVISION)									

TENNESSEE VALLEY AUTHORITY

S BROWNS FERRY NUCLEAR PLANT
UNIT #2

CONTROL ROD DRIVE SCRAM DISCHARGE SYSTEM
SUPPORT LOCATIONS

DRAWN KEV	SUBMITTED	APPROVED	SCALE NTS
DATE 9-1-88	DATE	DATE	SHEET 02 OF 02 SHEET(S)
CHECKED JH	EDC	GLB	DRAWING NO. 2-1S1-0041-C REV 000
DATE			

CCD

PCADAM

ALL A/D HISTORY RESEARCHED AT R000

REFERENCE DRAWINGS
BP-201-5
47W400 SH. 1 & 5
MS6-0021-C (SH. 1) WELD MAP

LEGEND
● RIGID HANGER
✱ VARIABLE SUPPORT

ASME CC-2 (EQUIVALENT)

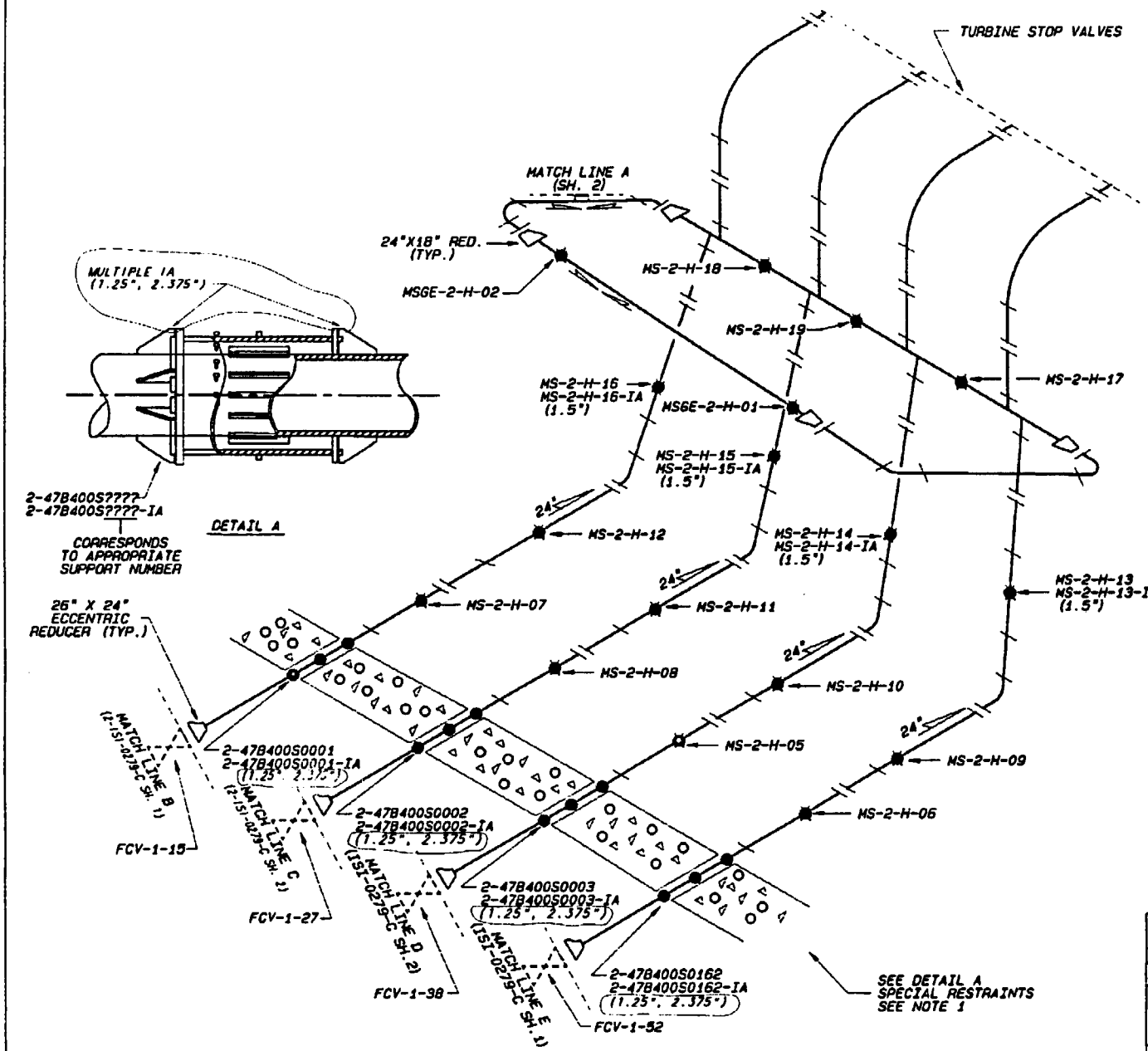

REV NO	CHANGE REF	DATE	DFTR	CHKR	DSGN	RVWR	1 APPD	2 APPD	3 APPD	ISSD
000	ECN 6000 ISSUED TO CREATE CCD REFERENCES AS-REQUIRED (2-1S1-0279-C-1 & 2) AND TO DEPICT AS CONSTRUCTED STATUS PER RTNS BEIND RTS 37M023 3001; A/D 05-06		BRL		N/A		N/A	N/A		
000	ISSUED FOR CONSTRUCTION									

S TENNESSEE VALLEY AUTHORITY

BROWNS FERRY NUCLEAR PLANT
UNIT #2
MAINSTEAM SYSTEM
SUPPORT LOCATIONS

DRAWN:	SUBMITTED	APPROVED	SCALE: NTS
DATE:	DATE:	DATE:	SHEET 1 OF 2 SHEET(S)
CHECKED:		GLB	DRAWING NO. 2-1S1-0079-C REV 000
DATE:			

CCD

PCADAM

ALL A/D HISTORY RESEARCHED AT R000

REFERENCE DRAWINGS
47W400 SH. 1 & 5
BP-336-2
BP-337-2
MSG-0021-C (SH. 2) WELD MAP

LEGEND
● RIGID HANGER
✱ VARIABLE SUPPORT

ASME CC-2 (EQUIVALENT)

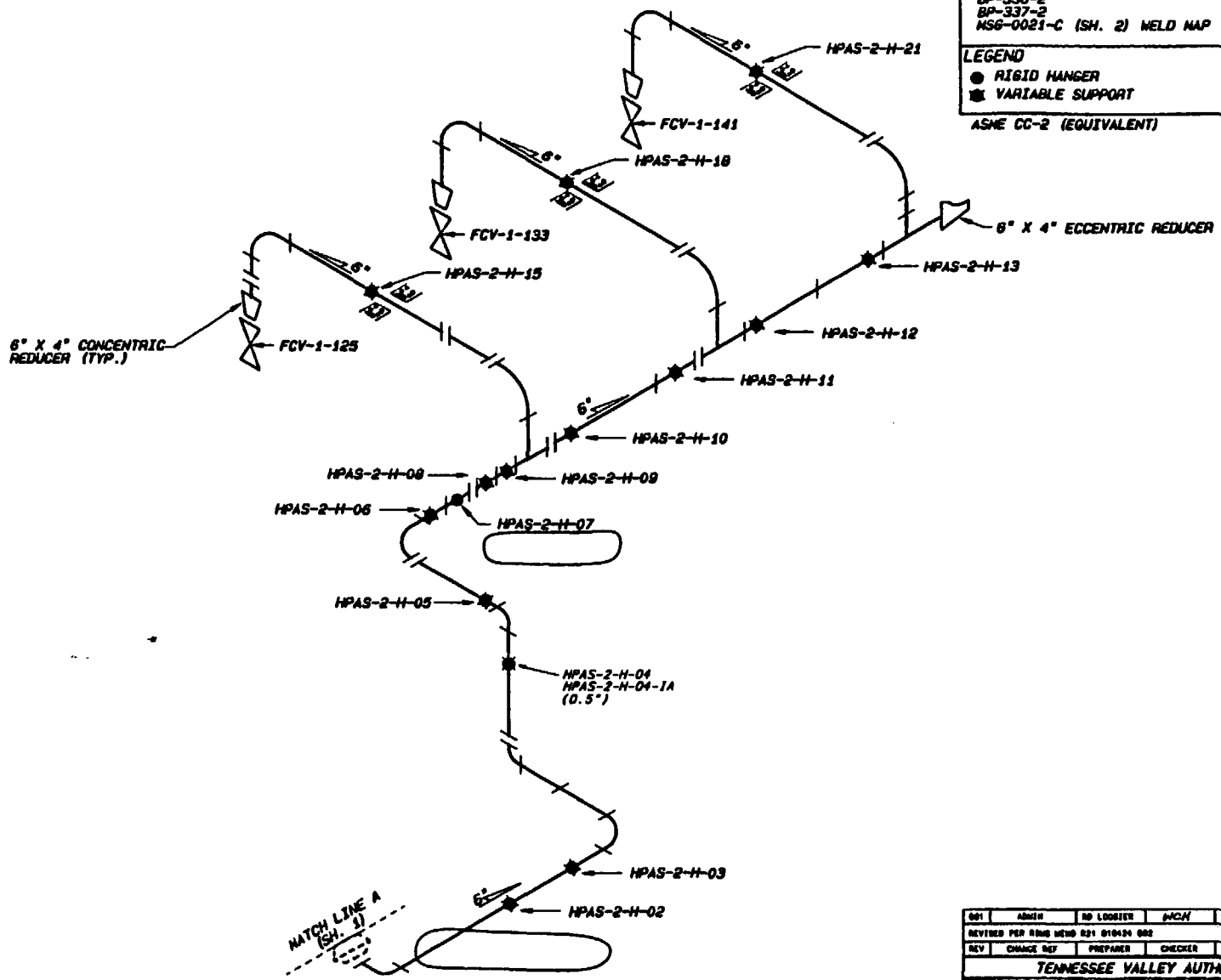

REV	CHANGE REF	PREPARER	CHECKER	APPROVED	DATE
001	ADMIN	RD LOOSIER	WCH	GLB	6-24-01
REVISED PER RIMS MEMO R31 010424 002					

TENNESSEE VALLEY AUTHORITY
BROWNS FERRY NUCLEAR PLANT
UNIT #2
MAINSTEAM SYSTEM
SUPPORT LOCATIONS

DRAWN REV DATE 12-13-83 CHECKED JTS DATE
SUBMITTED DATE
APPROVED DATE GLB
SCALE NTS SHEET 2 OF 2 SHEET(S)
DRAWING NO. 2-1S1-0079-C REV 001

CAD MAINTAINED DRAWING

CCD

AutoCAD

ALL A/D HISTORY RESEARCHED AT ROOO

AF
R04

REFERENCE DRAWINGS
47W458 SERIES
47W458-H SERIES
1SI-0103-C (SH. 1) MELO MAP

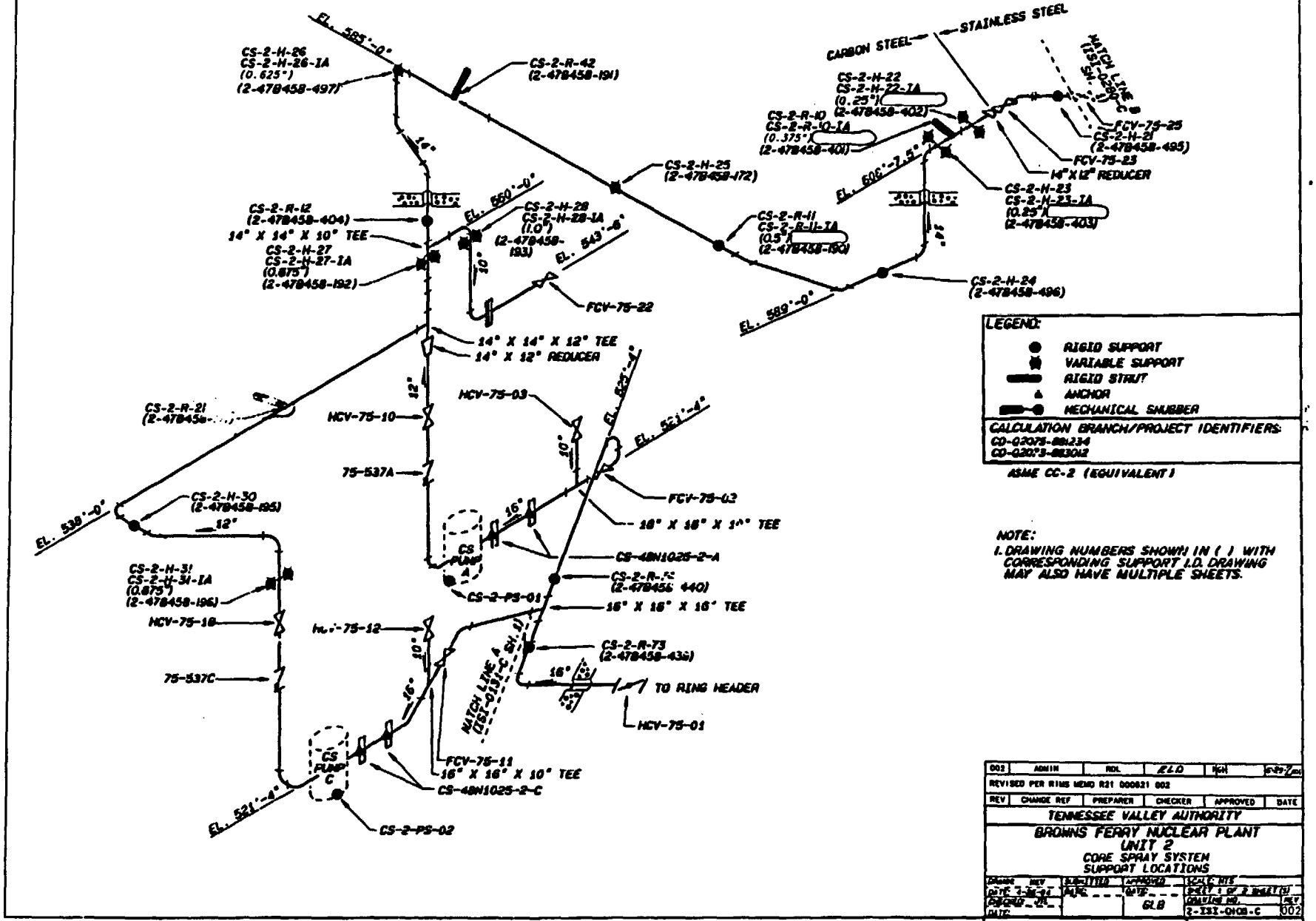

LEGEND:

- RIGID SUPPORT
- VARIABLE SUPPORT
- RIGID STRUT
- ANCHOR
- MECHANICAL SNUBBER

CALCULATION BRANCH/PROJECT IDENTIFIERS:
CD-02075-[illegible]234
CD-02075-[illegible]012

ASME CC-2 (EQUIVALENT)

NOTE:
1. DRAWING NUMBERS SHOWN IN ( ) WITH CORRESPONDING SUPPORT I.D. DRAWING MAY ALSO HAVE MULTIPLE SHEETS.

REV	CHANGE REF	PREPARER	CHECKER	APPROVED	DATE
002	ADMIN	RDL	ELD	[illegible]	[illegible]
REVISED PER RIMS MEMO R21 000821 002					

TENNESSEE VALLEY AUTHORITY

BROWNS FERRY NUCLEAR PLANT
UNIT 2
CORE SPRAY SYSTEM
SUPPORT LOCATIONS

DRAWN REV
DATE 2-26-[illegible]
CHECKED
DATE
SUBSYSTEM
DATE
APPROVED
DATE
GLB
SCALE NTS
SHEET 1 OF 2 SHEET(S)
DRAWING NO. 2-1SI-0103-C
REV 002
CCD

CAD MAINTAINED DRAWING

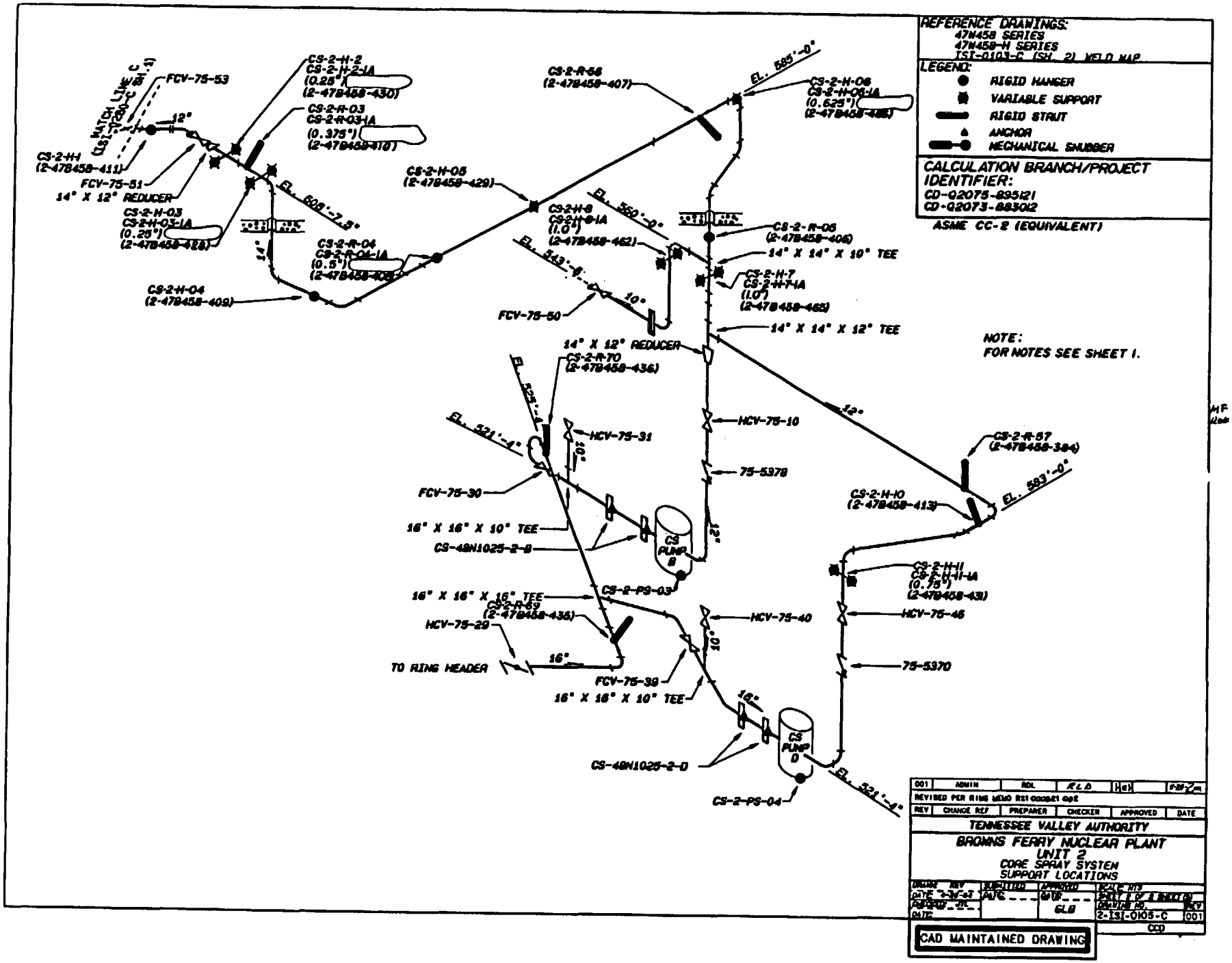
REFERENCE DRAWINGS:
47N458 SERIES
47N458-H SERIES
TSI-0103-C (SH. 2) WELD MAP
LEGEND:
RIGID HANGER
VARIABLE SUPPORT
RIGID STRUT
ANCHOR
MECHANICAL SNUBBER
CALCULATION BRANCH/PROJECT IDENTIFIER:
CD-02075-895121
CD-02073-883012
ASME CC-2 (EQUIVALENT)
NOTE:
FOR NOTES SEE SHEET 1.
FCV-75-53
CS-2-H-2
CS-2-H-2-1A
(0.25")
(2-47B458-430)
CS-2-R-03
CS-2-R-03-1A
(0.375")
(2-47B458-410)
12"
CS-2-H-1
(2-47B458-411)
FCV-75-51
14" X 12" REDUCER
CS-2-H-03
CS-2-H-03-1A
(0.25")
(2-47B458-428)
EL. 608'-7.5"
14"
CS-2-R-04
CS-2-R-04-1A
(0.5")
(2-47B458-408)
CS-2-H-04
(2-47B458-409)
CS-2-R-56
(2-47B458-407)
CS-2-H-05
(2-47B458-429)
EL. 585'-0"
CS-2-H-06
CS-2-H-06-1A
(0.625")
(2-47B458-465)
EL. 550'-0"
CS-2-H-8
CS-2-H-8-1A
(1.0")
(2-47B458-462)
EL. 543'-0"
10"
FCV-75-50
CS-2-R-05
(2-47B458-406)
14" X 14" X 10" TEE
CS-2-H-7
CS-2-H-7-1A
(1.0")
(2-47B458-465)
14" X 14" X 12" TEE
14" X 12" REDUCER
CS-2-R-70
(2-47B458-436)
EL. 529'-4"
EL. 521'-4"
HCV-75-31
10"
HCV-75-10
12"
75-5378
FCV-75-30
16" X 16" X 10" TEE
CS-48N1025-2-B
CS PUMP B
12"
CS-2-PS-03
16" X 16" X 16" TEE
CS-2-R-69
(2-47B458-435)
HCV-75-29
TO RING HEADER
16"
FCV-75-39
16" X 16" X 10" TEE
HCV-75-40
10"
16"
CS PUMP D
CS-48N1025-2-D
CS-2-PS-04
EL. 521'-4"
CS-2-R-57
(2-47B458-384)
EL. 593'-0"
CS-2-H-10
(2-47B458-413)
CS-2-H-11
CS-2-H-11-1A
(0.75")
(2-47B458-431)
HCV-75-46
75-5370
001 ADMIN RDL RLD
REVISED PER RING MEMO R21-000881-002
REV CHANGE REF PREPARER CHECKER APPROVED DATE
TENNESSEE VALLEY AUTHORITY
BROWNS FERRY NUCLEAR PLANT
UNIT 2
CORE SPRAY SYSTEM
SUPPORT LOCATIONS
DRAWN BY
DATE 2-3-93
SUPERVISED
DATE
CHECKED
GLB
SCALE NTS
DRAWING NO.
2-ISI-0105-C
REV
001
CCD
CAD MAINTAINED DRAWING

REFERENCE DRAWINGS
47W455-1 SERIES
47W335-10, 12
ISI-0130-C (SH. 1) SUPPORT MAP

MATERIAL SPECIFICATIONS
CARBON STEEL
24" SCH 20 (0.375" NOM WALL THK)
20" SCH 20 (0.375" NOM WALL THK)
10" SCH 80 (0.593" NOM WALL THK)
ASME CC-2 (EQUIVALENT)

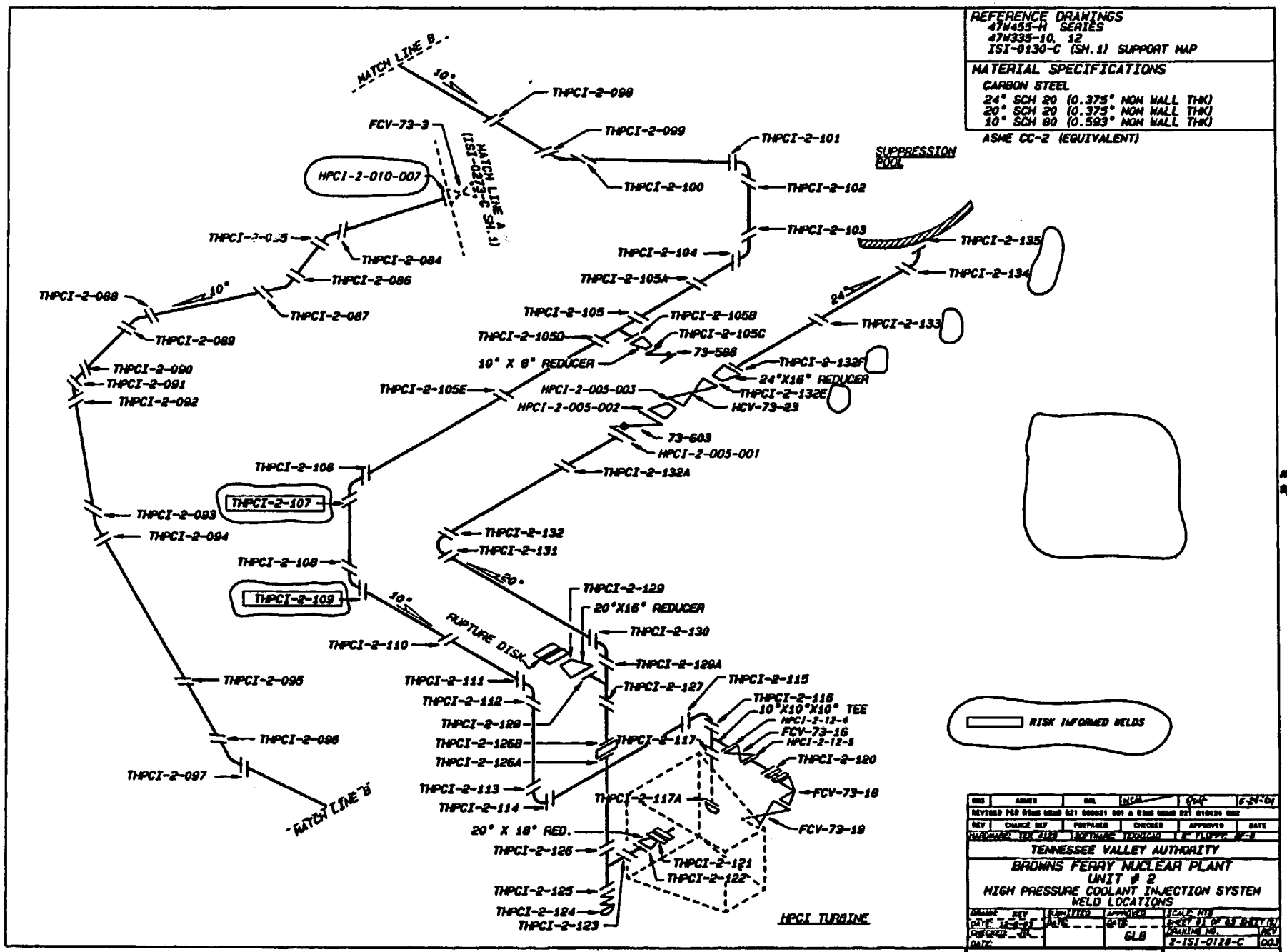

ALL A/D HISTORY RESEARCHED AT ROOD

DRS	ARMER	DRL			5-24-01
REVISED PER RTMS MEMO 521 000621 001 & RTMS MEMO 521 010434 002					
REV	CHANGE REF	PREPARER	CHECKED	APPROVED	DATE
HARDWARE: TEK 4128	SOFTWARE: TECHCAD	8" FLOPPY: DC-8			

TENNESSEE VALLEY AUTHORITY
BROWNS FERRY NUCLEAR PLANT
UNIT # 2
HIGH PRESSURE COOLANT INJECTION SYSTEM
WELD LOCATIONS

DRAWN REV	SUBMITTED	APPROVED	SCALE NTS
DATE 12-5-97	DATE	DATE GLB	SHEET 01 OF 03 SHEETS (S)
CHECKED			DRAWING NO. 2-ISI-0128-C REV 003
DATE			

CAD MAINTAINED DRAWING

CCD

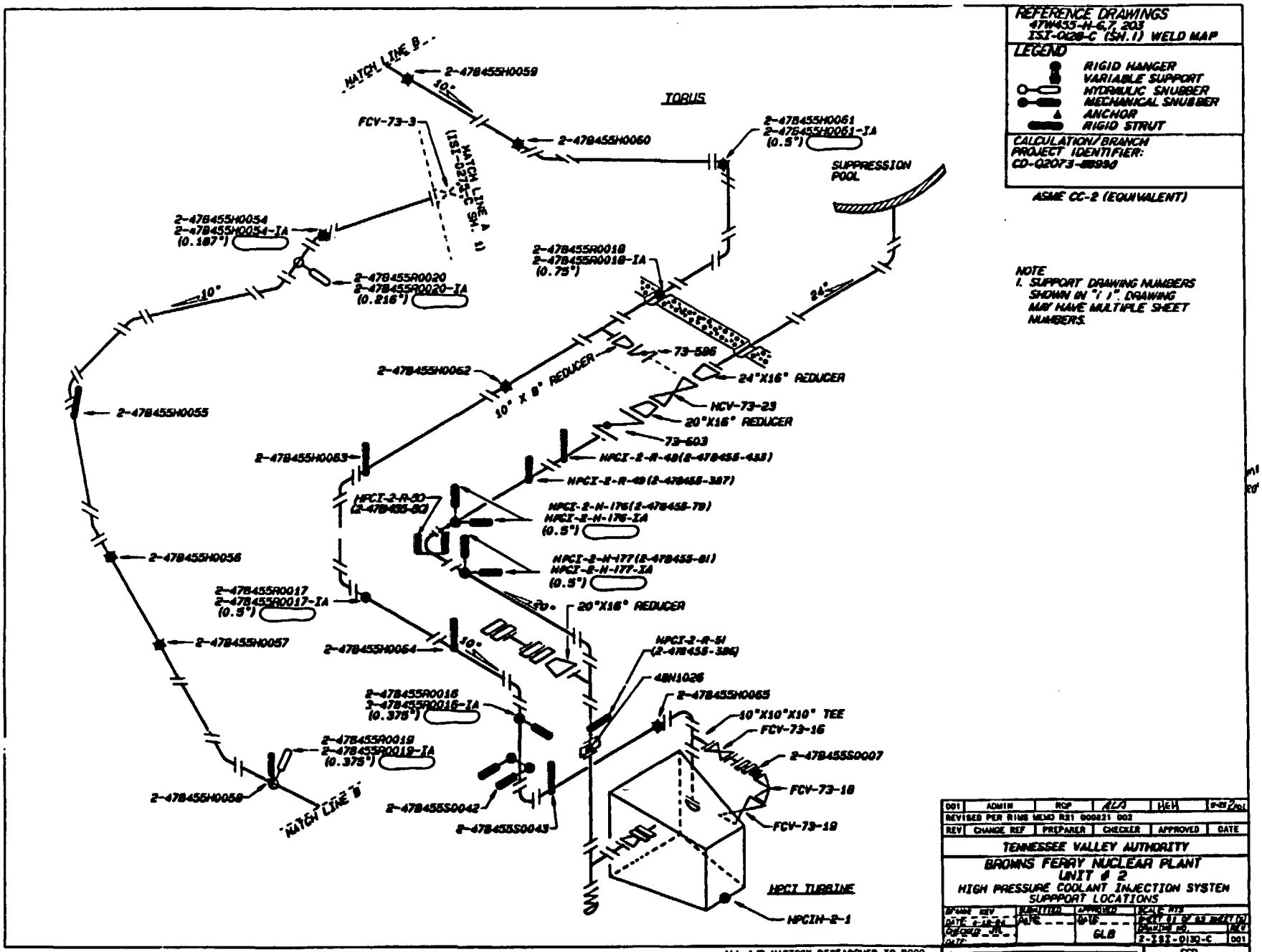
REFERENCE DRAWINGS
47W455-N-6,7,203
ISI-0128-C (SH.1) WELD MAP
LEGEND
RIGID HANGER
VARIABLE SUPPORT
HYDRAULIC SNUBBER
MECHANICAL SNUBBER
ANCHOR
RIGID STRUT
CALCULATION/BRANCH
PROJECT IDENTIFIER:
CD-Q2073-8899d
ASME CC-2 (EQUIVALENT)
NOTE
1. SUPPORT DRAWING NUMBERS SHOWN IN "( )" DRAWING MAP HAVE MULTIPLE SHEET NUMBERS.
MATCH LINE B
2-47B455H0059
10"
TORUS
FCV-73-3
MATCH LINE A (ISI-0273-C SH. 1)
2-47B455H0060
2-47B455H0061
2-47B455H0061-IA
(0.5")
SUPPRESSION POOL
2-47B455H0054
2-47B455H0054-IA
(0.187")
2-47B455R0018
2-47B455R0018-IA
(0.75")
2-47B455R0020
2-47B455R0020-IA
(0.216")
10"
24"
73-596
24"X16" REDUCER
2-47B455H0062
10" X 8" REDUCER
NCV-73-23
20"X16" REDUCER
2-47B455H0055
73-603
2-47B455H0063
HPCI-2-R-48(2-47B455-433)
HPCI-2-R-49(2-47B455-387)
HPCI-2-R-50
(2-47B455-80)
HPCI-2-H-176(2-47B455-79)
HPCI-2-H-176-IA
(0.5")
HPCI-2-H-177(2-47B455-81)
HPCI-2-H-177-IA
(0.5")
2-47B455H0056
2-47B455R0017
2-47B455R0017-IA
(0.5")
20"
20"X16" REDUCER
2-47B455H0057
2-47B455H0064
10"
HPCI-2-R-51
(2-47B455-386)
48N1026
2-47B455R0016
2-47B455R0016-IA
(0.375")
2-47B455H0065
10"X10"X10" TEE
FCV-73-16
2-47B455R0019
2-47B455R0019-IA
(0.375")
2-47B455S0007
FCV-73-18
2-47B455H0058
MATCH LINE B
2-47B455S0042
2-47B455S0043
FCV-73-19
HPCI TURBINE
HPCIH-2-1
ALL A/D HISTORY RESEARCHED TO R000
001 ADMIN RCP AZA HEH
REVISED PER RIMS MEMO R31 000821 002
REV CHANGE REF PREPARER CHECKER APPROVED DATE
TENNESSEE VALLEY AUTHORITY
BROWNS FERRY NUCLEAR PLANT
UNIT # 2
HIGH PRESSURE COOLANT INJECTION SYSTEM
SUPPORT LOCATIONS
GLB
2-ISI-0130-C
001
CCD
CAD MAINTAINED DRAWING

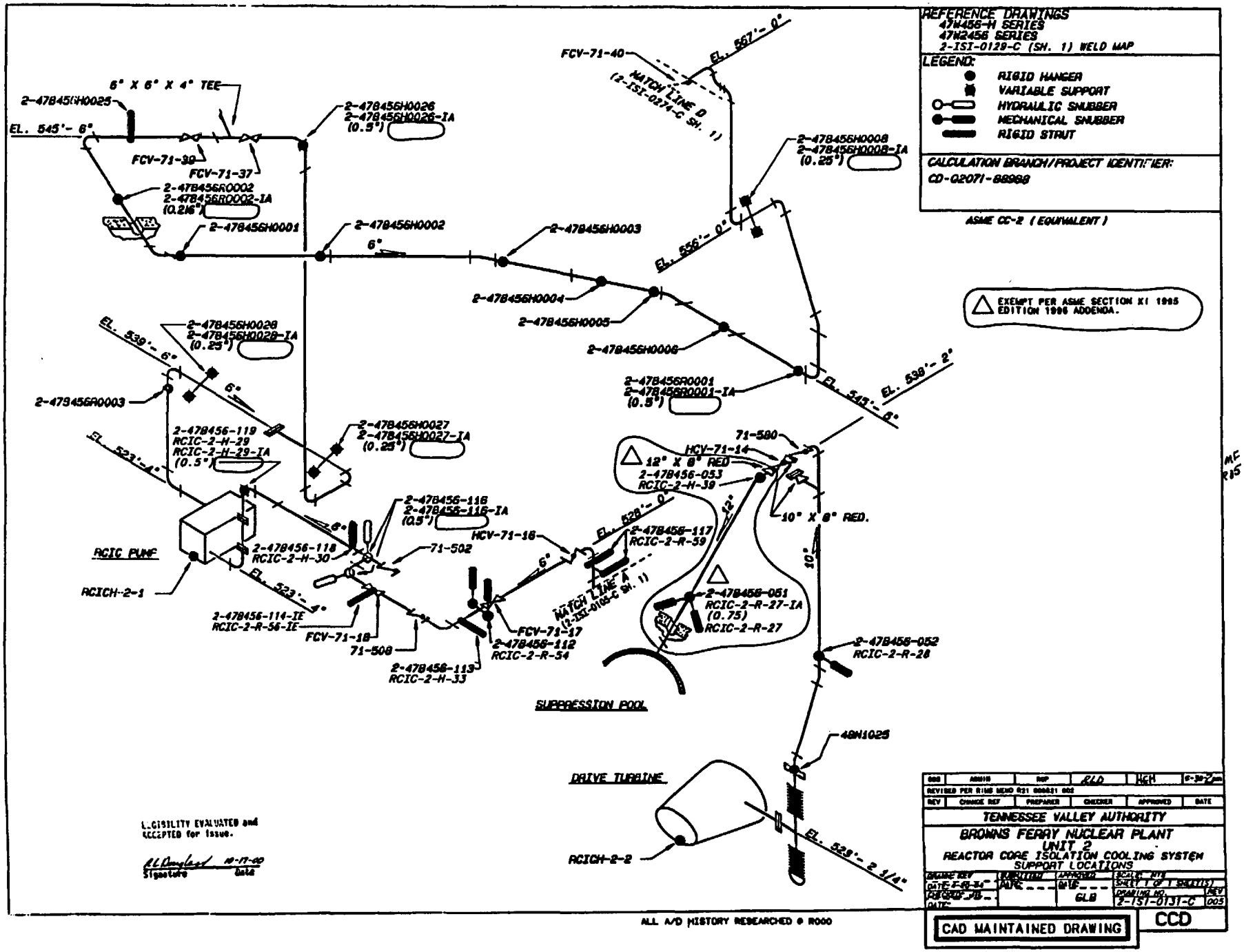
REFERENCE DRAWINGS
47W456-H SERIES
47W2456 SERIES
2-ISI-0129-C (SH. 1) WELD MAP
LEGEND:
RIGID HANGER
VARIABLE SUPPORT
HYDRAULIC SNUBBER
MECHANICAL SNUBBER
RIGID STRUT
CALCULATION BRANCH/PROJECT IDENTIFIER:
CD-02071-88968
ASME CC-2 (EQUIVALENT)
EXEMPT PER ASME SECTION XI 1995 EDITION 1996 ADDENDA.
6" X 6" X 4" TEE
2-478456H0025
EL. 545'- 6"
FCV-71-39
FCV-71-37
2-478456R0002
2-478456R0002-IA
(0.216")
2-478456H0001
2-478456H0026
2-478456H0026-IA
(0.5")
2-478456H0002
6"
2-478456H0003
2-478456H0004
2-478456H0005
2-478456H0006
FCV-71-40
MATCH LINE D
(2-ISI-0274-C SH. 1)
EL. 567'- 0"
EL. 556'- 0"
2-478456H0008
2-478456H0008-IA
(0.25")
2-478456R0001
2-478456R0001-IA
(0.5")
EL. 543'- 8"
EL. 538'- 2"
EL. 539'- 6"
2-478456H0028
2-478456H0028-IA
(0.25")
2-478456R0003
6"
2-478456-119
RCIC-2-H-29
RCIC-2-H-29-IA
(0.5")
2-478456H0027
2-478456H0027-IA
(0.25")
EL. 523'- 4"
71-580
HCV-71-14
12" X 8" RED
2-478456-053
RCIC-2-H-39
10" X 8" RED.
2-478456-116
2-478456-116-IA
(0.5")
HCV-71-16
EL. 528'- 0"
2-478456-117
RCIC-2-R-59
RCIC PUMP
2-478456-118
RCIC-2-H-30
71-502
RCICH-2-1
EL. 523'- 4"
MATCH LINE A
(2-ISI-0165-C SH. 1)
2-478456-051
RCIC-2-R-27-IA
(0.75)
RCIC-2-R-27
2-478456-114-IE
RCIC-2-R-56-IE
FCV-71-18
71-508
FCV-71-17
2-478456-112
RCIC-2-R-54
2-478456-113
RCIC-2-H-33
2-478456-052
RCIC-2-R-28
SUPPRESSION POOL
48N1025
DRIVE TURBINE
RCICH-2-2
EL. 529'- 2 1/4"
LEGIBILITY EVALUATED and ACCEPTED for issue.
Signature
Date
ALL A/D HISTORY RESEARCHED @ R000
TENNESSEE VALLEY AUTHORITY
BROWNS FERRY NUCLEAR PLANT
UNIT 2
REACTOR CORE ISOLATION COOLING SYSTEM
SUPPORT LOCATIONS
REVISED PER RIMS MEMO 921 960831 002
DRAWING NO. 2-ISI-0131-C
REV 005
CAD MAINTAINED DRAWING
CCD

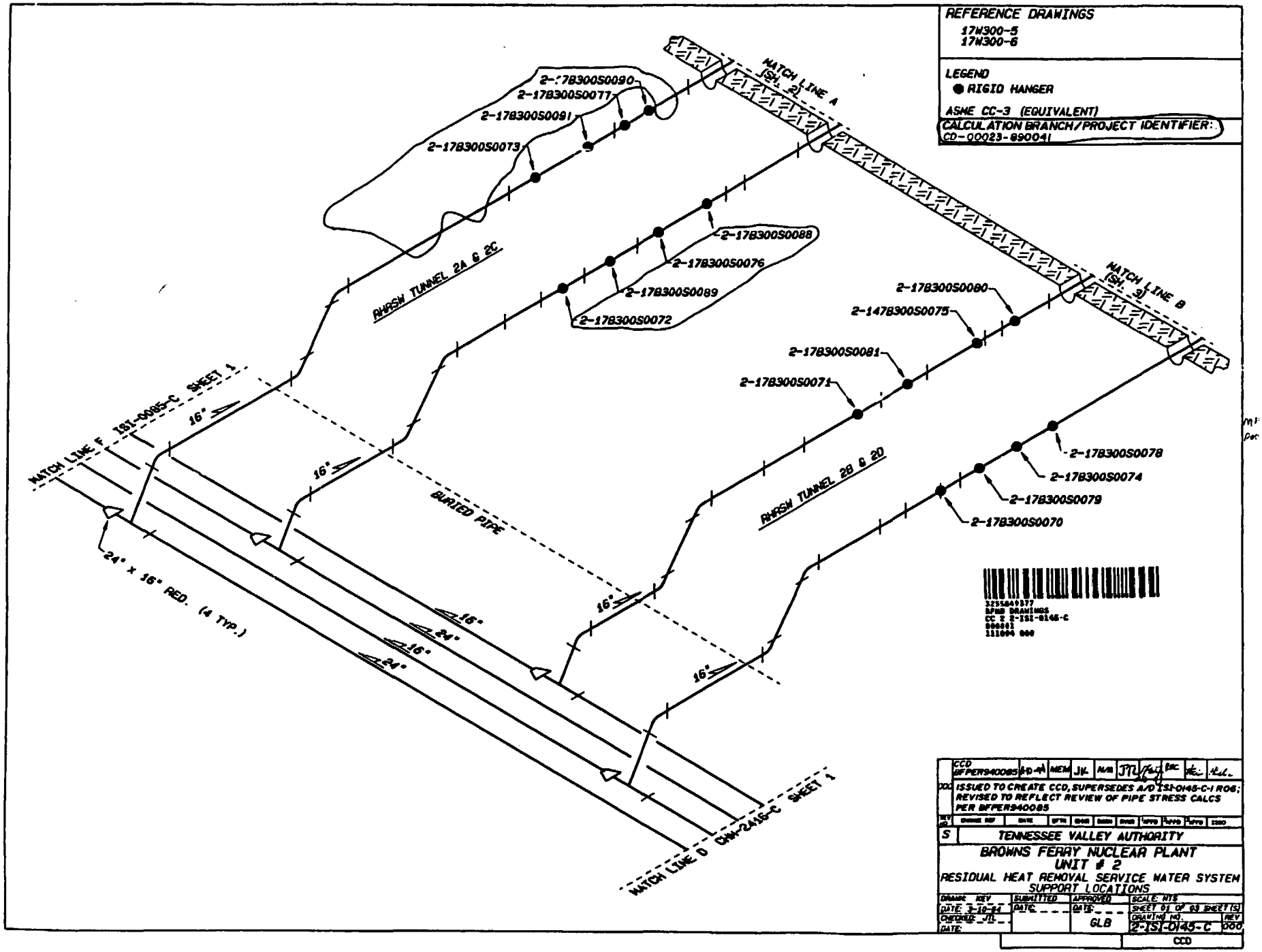
REFERENCE DRAWINGS
17W300-5
17W300-6
LEGEND
RIGID HANGER
ASME CC-3 (EQUIVALENT)
CALCULATION BRANCH/PROJECT IDENTIFIER:
CD-00023-890041
MATCH LINE A (SH. 2)
MATCH LINE B (SH. 3)
MATCH LINE F 1S1-0085-C SHEET 1
MATCH LINE D CNN-2416-C SHEET 1
2-17B300S0090
2-17B300S0077
2-17B300S0091
2-17B300S0073
2-17B300S0088
2-17B300S0076
2-17B300S0089
2-17B300S0072
2-17B300S0080
2-147B300S0075
2-17B300S0081
2-17B300S0071
2-17B300S0078
2-17B300S0074
2-17B300S0079
2-17B300S0070
RHRSW TUNNEL 2A & 2C
RHRSW TUNNEL 2B & 2D
BURIED PIPE
16"
24"
24" X 16" RED. (4 TYP.)
CCD BFPER940085
ISSUED TO CREATE CCD, SUPERSEDES A/D 1S1-0145-C-1 R06; REVISED TO REFLECT REVIEW OF PIPE STRESS CALCS PER BFPER940085
TENNESSEE VALLEY AUTHORITY
BROWNS FERRY NUCLEAR PLANT
UNIT # 2
RESIDUAL HEAT REMOVAL SERVICE WATER SYSTEM
SUPPORT LOCATIONS
DRAWN: KEV
DATE: 3-10-94
CHECKED: JTL
DATE:
SUBMITTED
DATE:
APPROVED
DATE:
GLB
SCALE: NTS
SHEET 01 OF 03 SHEET(S)
DRAWING NO. 2-1S1-0145-C
REV 000
CCD

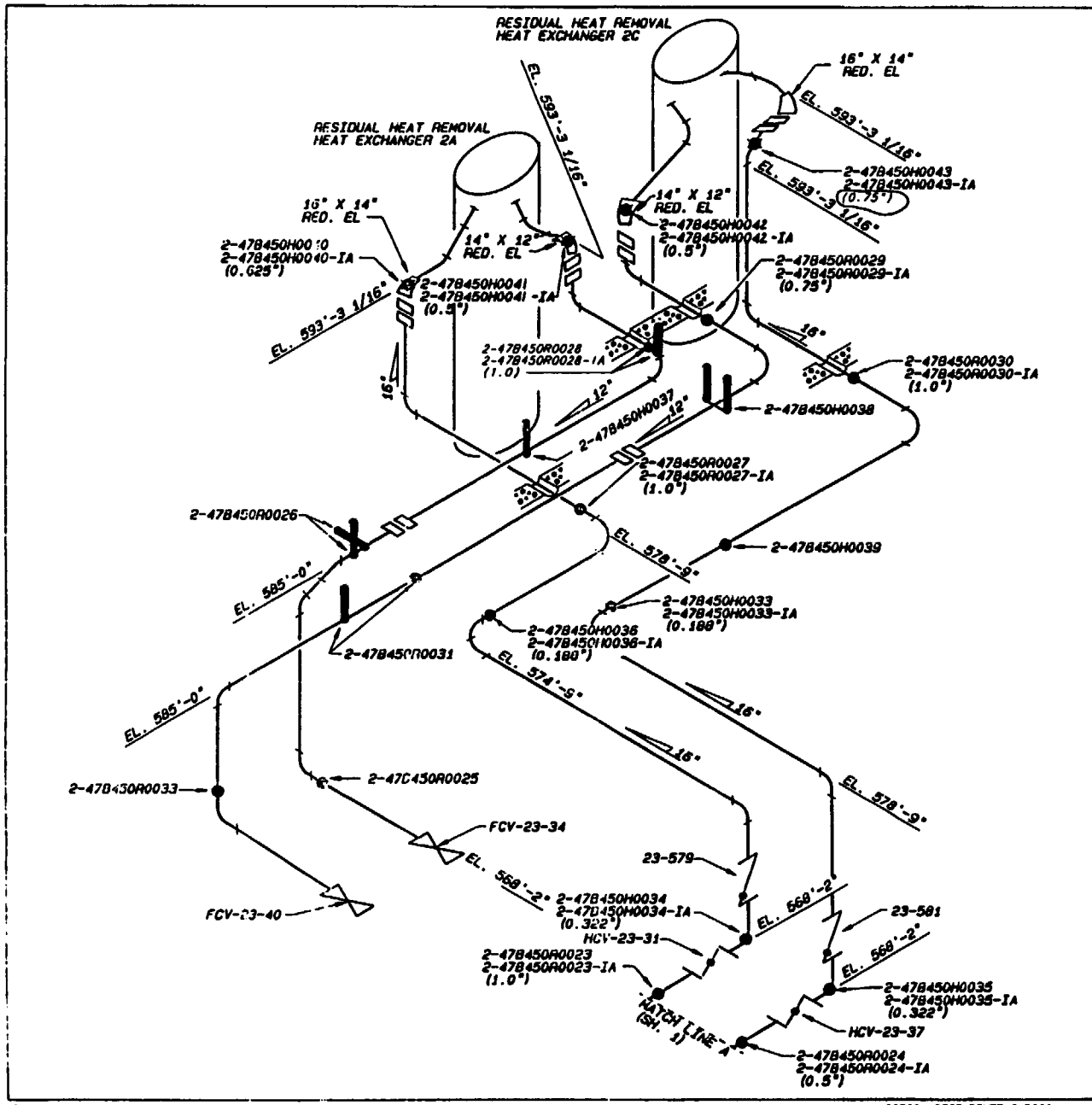

REFERENCE DRAWINGS

2-47E450-2
0-47W450-4

LEGEND

- RIGID HANGER
- VARIABLE SUPPORT
- RIGID STRUT

CALCULATION BRANCH / PROJECT IDENTIFIER

CD-Q2023-89I361
CD-Q2023-89I362
CD-Q2023-89I363

ASME CC-3 (EQUIVALENT)

REV	CHANGE REF	PREPARER	CHECKER	APPROVED	DATE
002	ADMIN	RDL	WCH	RLO	12-9-99

REVISED PER RIMS MEMO R21 991201 003

TENNESSEE VALLEY AUTHORITY

BROWNS FERRY NUCLEAR PLANT
UNIT # 2
RESIDUAL HEAT REMOVAL SERVICE WATER SYSTEM
SUPPORT LOCATIONS

DRAWN REV | SUBMITTED | APPROVED | SCALE NTS
DATE 3-8-91 | DATE | DATE | SHEET 1 OF 3 SHEET(S)
CHECKED JTL | | GLB | DRAWING NO. | REV
DATE | | | 2-1SI-045-2 | 002

CCD

PCADAM

ALL A/D HISTORY RESEARCHED @ R000

MF R000

NOTE:

1. PIPE SEGMENTS CONTAINING TWO LONGITUDINAL SEAMS WILL BE IDENTIFIED AS:

   (BASE WELD NO.)-LS-1D (DOWNSTREAM)
   (BASE WELD NO.)-LS-2D (DOWNSTREAM)
   (BASE WELD NO.)-LS-1U (UPSTREAM)
   (BASE WELD NO.)-LS-2U (UPSTREAM)

   THE -LS-1 SEAM WILL BE NUMERICALLY CLOSEST TO 0° ON THE PIPE, AND THE -LS-2 SEAM WILL BE NUMERICALLY FARTHERMOST FROM 0° ON THE PIPE. (e.g. -LS-1 AT 130°, AND -LS-2 AT 310°)

2. PIPE SEGMENTS CONTAINING ONLY ONE LONGITUDINAL SEAM WILL BE IDENTIFIED AS:

   (BASE WELD NO.)-LS-D (DOWNSTREAM)
   (BASE WELD NO.)-LS-U (UPSTREAM)

REFERENCE DRAWINGS:
47N1568
47W335-4 & 6
47W452 SERIES
DRAVO E-2458-IC-31, 32, & 33
2-ISI-0276-C SH1
NOTE: THIS DRAWING SUPERCEDES CHM-2070-C ALL SHEETS.

MATERIAL SPECIFICATION:
STAINLESS PIPE A-358, GR 304, CL.1
STAINLESS FITTINGS A-403WP304

24" X 1.219" NOM. WALL THK. SHC. 80 SS
20" X 1.031" NOM. WALL THK. SCH. 80 SS
20" X 1.031" NOM. WALL THK. SCH. 80 CS
6" X 0.432" NOM. WALL THK. SCH. 80S SS

ASME CC-1 (EQUIVALENT)

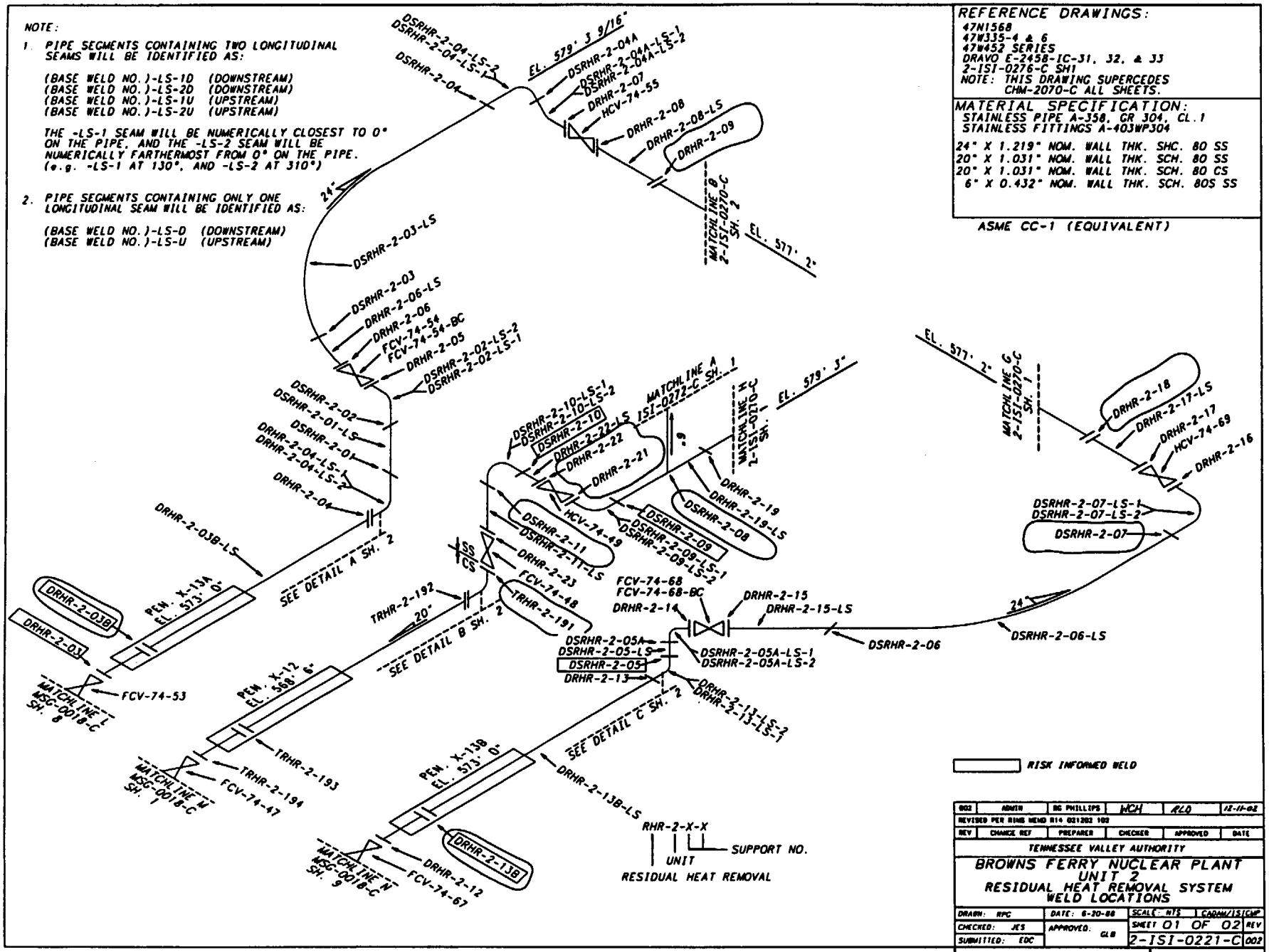

REV	CHANGE REF	PREPARER	CHECKER	APPROVED	DATE
002	ADMIN	BG PHILLIPS	WCH	RLO	12-11-02

REVISED PER RIMS MEMO R14 021202 102

TENNESSEE VALLEY AUTHORITY

BROWNS FERRY NUCLEAR PLANT
UNIT 2
RESIDUAL HEAT REMOVAL SYSTEM
WELD LOCATIONS

DRAWN: RPC	DATE: 6-20-88	SCALE: NTS	CADAM/IS/CMP
CHECKED: JES	APPROVED: GLB	SHEET 01 OF 02	REV
SUBMITTED: EDC		2-ISI-0221-C	002

ALL A/D HISTORY RESEARCHED AT ROOO

CAD MAINTAINED DRAWING

CCD

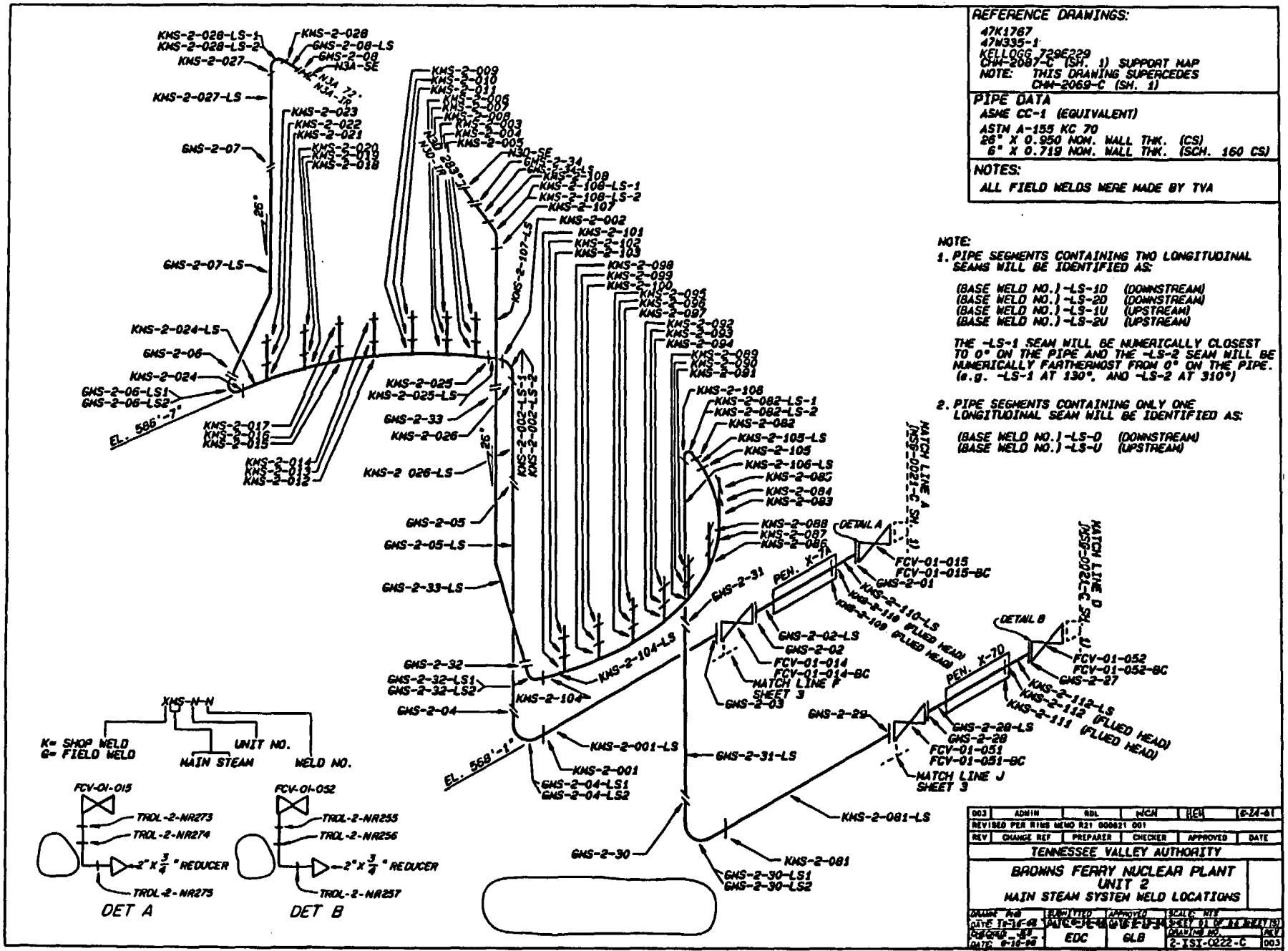
REFERENCE DRAWINGS:
47K1767
47W335-1
KELLOGG 729E229
CHM-2087-C (SH. 1) SUPPORT MAP
NOTE: THIS DRAWING SUPERCEDES CHM-2069-C (SH. 1)
PIPE DATA
ASME CC-1 (EQUIVALENT)
ASTM A-155 KC 70
26" X 0.950 NOM. WALL THK. (CS)
6" X 0.719 NOM. WALL THK. (SCH. 160 CS)
NOTES:
ALL FIELD WELDS WERE MADE BY TVA
NOTE:
1. PIPE SEGMENTS CONTAINING TWO LONGITUDINAL SEAMS WILL BE IDENTIFIED AS:
(BASE WELD NO.)-LS-1D (DOWNSTREAM)
(BASE WELD NO.)-LS-2D (DOWNSTREAM)
(BASE WELD NO.)-LS-1U (UPSTREAM)
(BASE WELD NO.)-LS-2U (UPSTREAM)
THE -LS-1 SEAM WILL BE NUMERICALLY CLOSEST TO 0° ON THE PIPE AND THE -LS-2 SEAM WILL BE NUMERICALLY FARTHERMOST FROM 0° ON THE PIPE. (e.g. -LS-1 AT 130°, AND -LS-2 AT 310°)
2. PIPE SEGMENTS CONTAINING ONLY ONE LONGITUDINAL SEAM WILL BE IDENTIFIED AS:
(BASE WELD NO.)-LS-D (DOWNSTREAM)
(BASE WELD NO.)-LS-U (UPSTREAM)
KMS-N-N
K= SHOP WELD
G= FIELD WELD
MAIN STEAM
UNIT NO.
WELD NO.
FCV-01-015
TROL-2-NR273
TROL-2-NR274
2" X 3/4" REDUCER
TROL-2-NR275
DET A
FCV-01-052
TROL-2-NR255
TROL-2-NR256
2" X 3/4" REDUCER
TROL-2-NR257
DET B
EL. 586'-7"
EL. 568'-1"
MATCH LINE A SHEET 3
MATCH LINE D SHEET 3
MATCH LINE F SHEET 3
MATCH LINE J SHEET 3
DETAIL A
DETAIL B
PEN. X-7A
PEN. X-7D
FCV-01-015
FCV-01-015-BC
FCV-01-052
FCV-01-052-BC
FCV-01-014
FCV-01-014-BC
FCV-01-051
FCV-01-051-BC
KMS-2-110 (FLUED HEAD)
KMS-2-109 (FLUED HEAD)
KMS-2-112 (FLUED HEAD)
KMS-2-111 (FLUED HEAD)
ALL A/D HISTORY RESEARCHED AT ROOO
TENNESSEE VALLEY AUTHORITY
BROWNS FERRY NUCLEAR PLANT
UNIT 2
MAIN STEAM SYSTEM WELD LOCATIONS
EDC
GLB
2-TSI-0222-C
003
CAD MAINTAINED DRAWING

REFERENCE DRAWINGS:
47K1767
47N335-1
KELLOG 729E229
2-1S1-0279-C (SH. 2) SUPPORT MAP
NOTE: THIS DRAWING SUPERCEDES CHH-2069-C (SH. 2)

PIPE DATA:
ASME CC-1 (EQUIVALENT)
ASTM A-155 KC 70
26" X 0.950" NOM. WALL THK. (CS)
6" X 0.719" NOM. WALL THK. (SCH. 160 CS)

NOTES:
ALL FIELD WELDS WERE MADE BY TVA

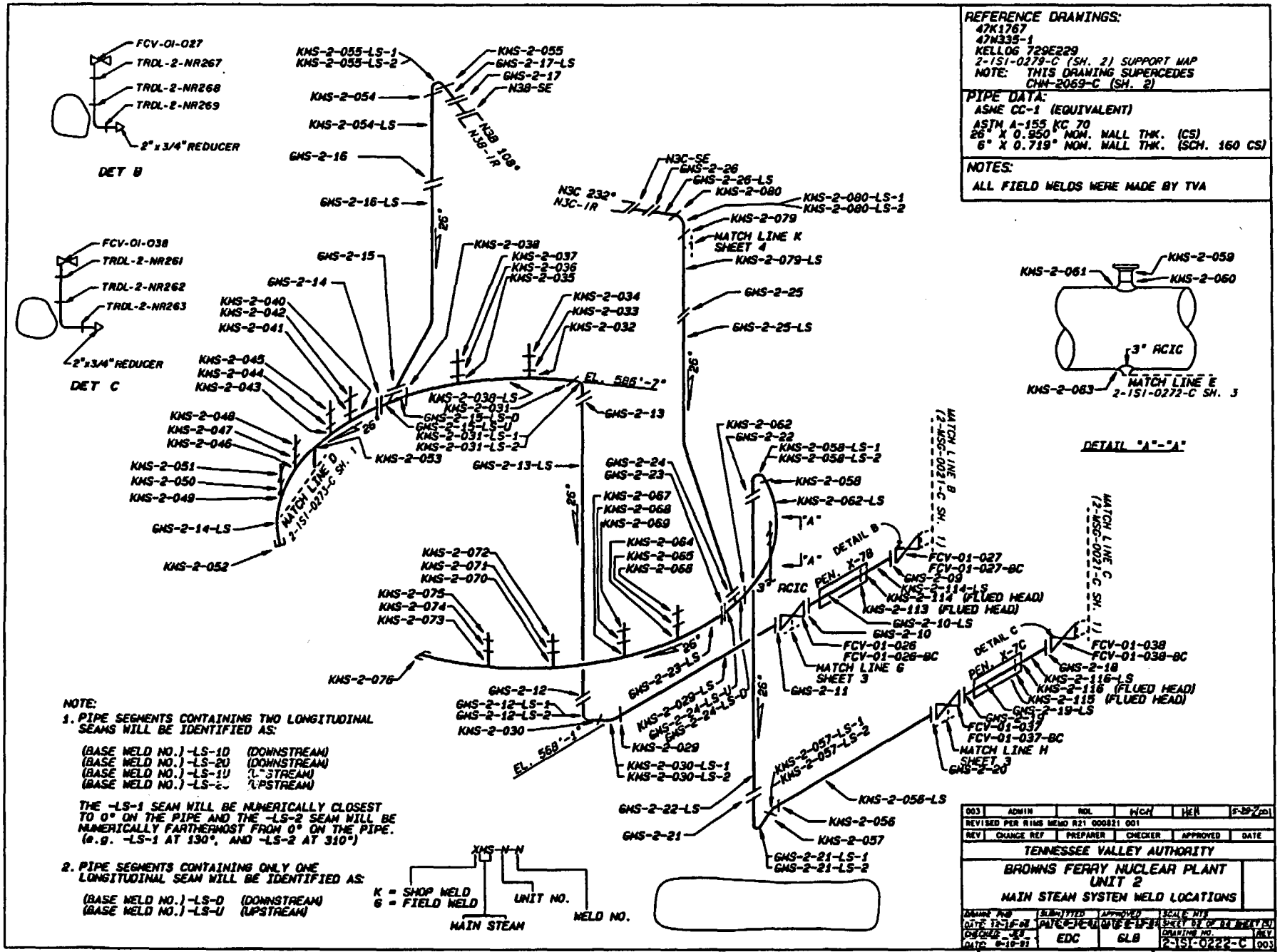

NOTE:
1. PIPE SEGMENTS CONTAINING TWO LONGITUDINAL SEAMS WILL BE IDENTIFIED AS:

(BASE WELD NO.)-LS-1D (DOWNSTREAM)
(BASE WELD NO.)-LS-2D (DOWNSTREAM)
(BASE WELD NO.)-LS-1U (UPSTREAM)
(BASE WELD NO.)-LS-2U (UPSTREAM)

THE -LS-1 SEAM WILL BE NUMERICALLY CLOSEST TO 0° ON THE PIPE AND THE -LS-2 SEAM WILL BE NUMERICALLY FARTHERMOST FROM 0° ON THE PIPE. (e.g. -LS-1 AT 130°, AND -LS-2 AT 310°)

2. PIPE SEGMENTS CONTAINING ONLY ONE LONGITUDINAL SEAM WILL BE IDENTIFIED AS:

(BASE WELD NO.)-LS-D (DOWNSTREAM)
(BASE WELD NO.)-LS-U (UPSTREAM)

REV	CHANGE REF	PREPARER	CHECKER	APPROVED	DATE
003	ADMIN	RDL	HCH	HEA	5-29-2001
REVISED PER RIMS MEMO R21 000821 001					

TENNESSEE VALLEY AUTHORITY

BROWNS FERRY NUCLEAR PLANT
UNIT 2
MAIN STEAM SYSTEM WELD LOCATIONS

DRAWN BY: EDC
DATE: 12-19-88
CHECKED: GLB
DATE: 6-19-91
SUBMITTED: DATE 6-19-91
APPROVED: DATE 6-19-91
SCALE: NTS
SHEET 01 OF 01 SHEET(S)
DRAWING NO. 2-1S1-0222-C
REV. 003
CCD

CAD MAINTAINED DRAWING

ALL A/D HISTORY RESEARCHED AT R000

REFERENCE DRAWINGS
B&W 122863

NOTE: THIS DRAWING SUPERSEDES CHN-2001-C (UNIT 2)

ASME CC-1 (EQUIVALENT)

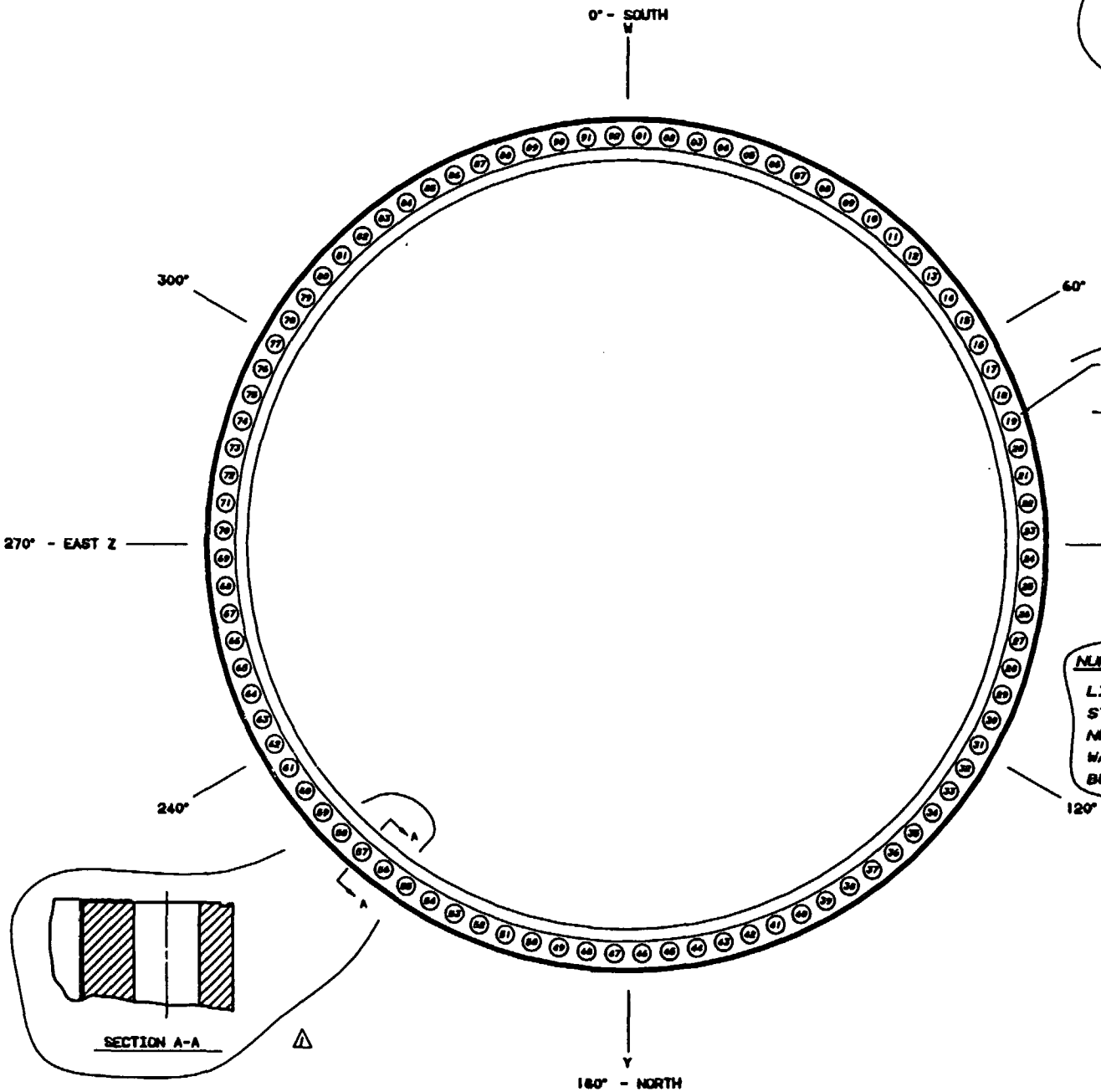

92 6.75" TAPPED HOLES ON 267.25" DIA. B.C. REF.

NUMBERS (01 THRU 92) ARE PREFIXED BY:

LIGAMENTS (THREADS)...RPV-LIGS-2-
STUDS.....RPV-STUDS-2-
NUTS.....RPV-NUTS-2-
WASHERS.....RPV-WASH-2-
BUSHINGS.....RPV-BUSH-2-

SECTION A-A

REV.	BY	CHECKED	SUBMITTED	APPROVED	DATE
1	PHB				3/13/92

ADD BUSHING PREFIX, CHANGE NOTE, REF. DWG., ADD FLANGE PROFILE

HARDWARE: IBM 9083 | SOFTWARE: CADAM | USER: ISIONP

TENNESSEE VALLEY AUTHORITY

BROWNS FERRY NUCLEAR PLANT
UNIT 2
REACTOR VESSEL STUD LOCATIONS

DRAWN: PHB DATE: 5-20-91	SUBMITTED DATE: 5-5-91	APPROVED DATE: 6-12-91	SCALE NTS
CHECKED: JCE DATE: 5-5-91	EDC	GLB	SHEET 01 OF 01 SHEET(S)
			DRAWING NO. TSI-0266-C01 REV

SR-3F

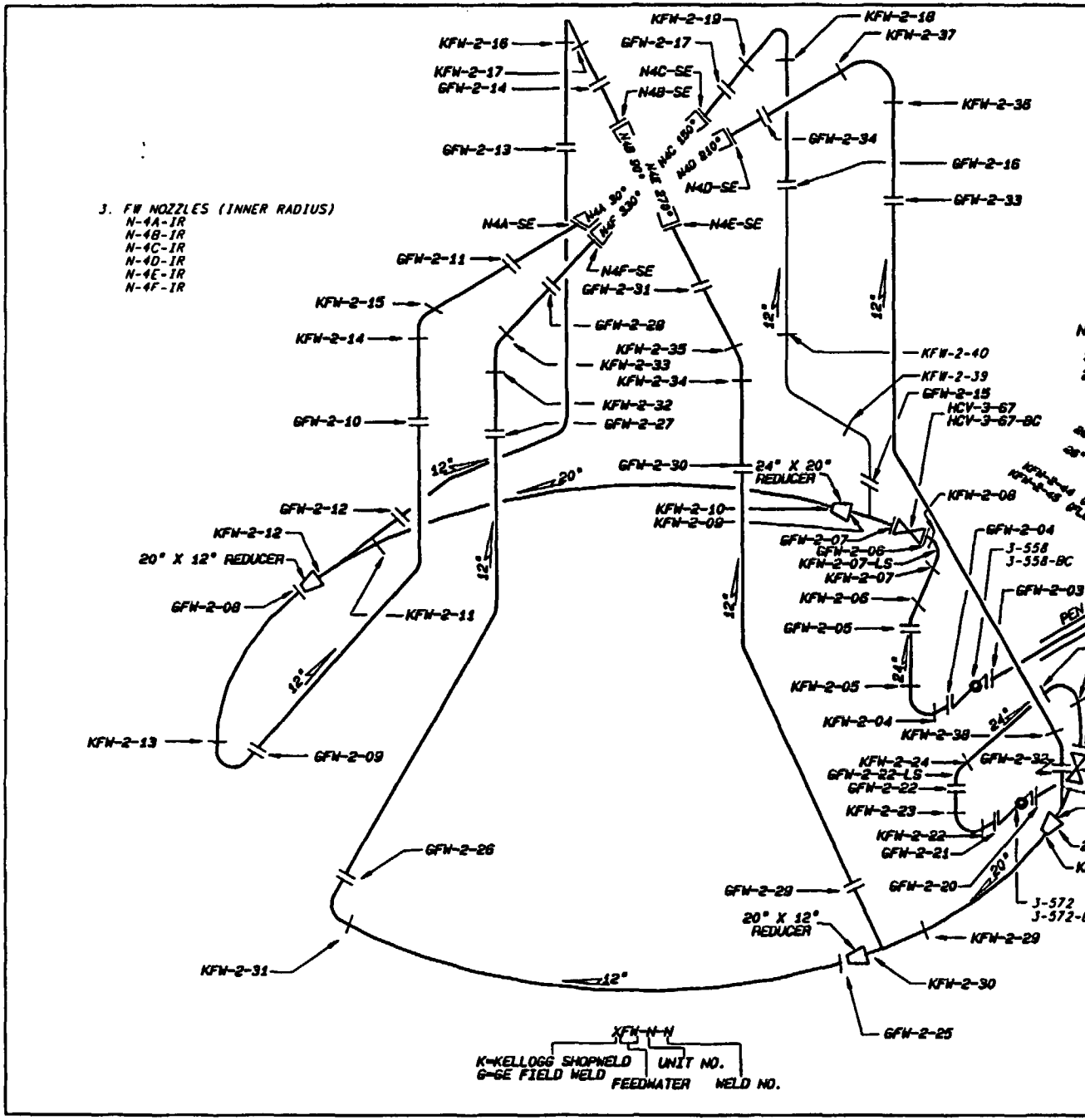

REFERENCE DRAWINGS

47K1545-1
47N335-2
GE 729E152
ISI-0277-C (SH. 1) SUPPORT MAP
THIS DRAWING SUPERCEDES CHW-2067-C ALL SHEETS.

MATERIAL SPECIFICATIONS

ASTM A-106 GR B SCH. 100 OR ASTM A-106 GR XDFTGCL
8" X 0.593" NOM. WALL CS
12" X 0.844 NOM. WALL CS
16" X 1.031" NOM. WALL CS
20" X 1.281 NOM. WALL CS
24" X 1.531 NOM. WALL CS
28" X 24" X 16" TEE SCH. 100 CS

ASTM A-106 GR B SCH. 120
12" X 1.06" NOM. WALL (SPOOL PIECE TO NOZZLE)

ASTM A-105 GR II
24" FLANGED HEAD CS

ASTM A-234 GR B SCH. 100 OR X.XXX" MIN WALL (TO SUIT PIPE AS FURNISHED)
ALL OTHER TEES, ELLS, AND REDUCERS

ASME CC-1 (EQUIVALENT)

NOTES

1. GE FIELD WELDS WERE MADE IN THE FIELD BY TVA.
2. PIPE SEGMENT LONGITUDINAL SEAMS WILL BE IDENTIFIED AS:

(BASE WELD)-LS-D (DOWNSTREAM)
(BASE WELD)-LS-U (UPSTREAM)

SYMBOL : RISK-INFORMED WELD

REV	CHANGE REF	PREPARER	CHECKER	APPROVED	DATE
004	ADMIN	RC PHILLIPS	WCH	RLD	12-11-02
REVISED PER RING MEMO R16 021202 102					

TENNESSEE VALLEY AUTHORITY

BROWNS FERRY NUCLEAR PLANT
UNIT #2
FEEDWATER SYSTEM
WELD LOCATIONS

DRAWN RPB	SUBMITTED	APPROVED	SCALE: NTS
DATE: 11-18-98	DATE: 11-18-98	DATE: 11-18-98	SHEET 01 OF 01 SHEET(S)
CHECKED JGB	EDC	GLB	DRAWING NO. 2-ISI-0269-C REV 004
DATE: 8-19-99			

ALL A/D HISTORY RESEARCHED AT RDDD

CAD MAINTAINED DRAWING

CCD

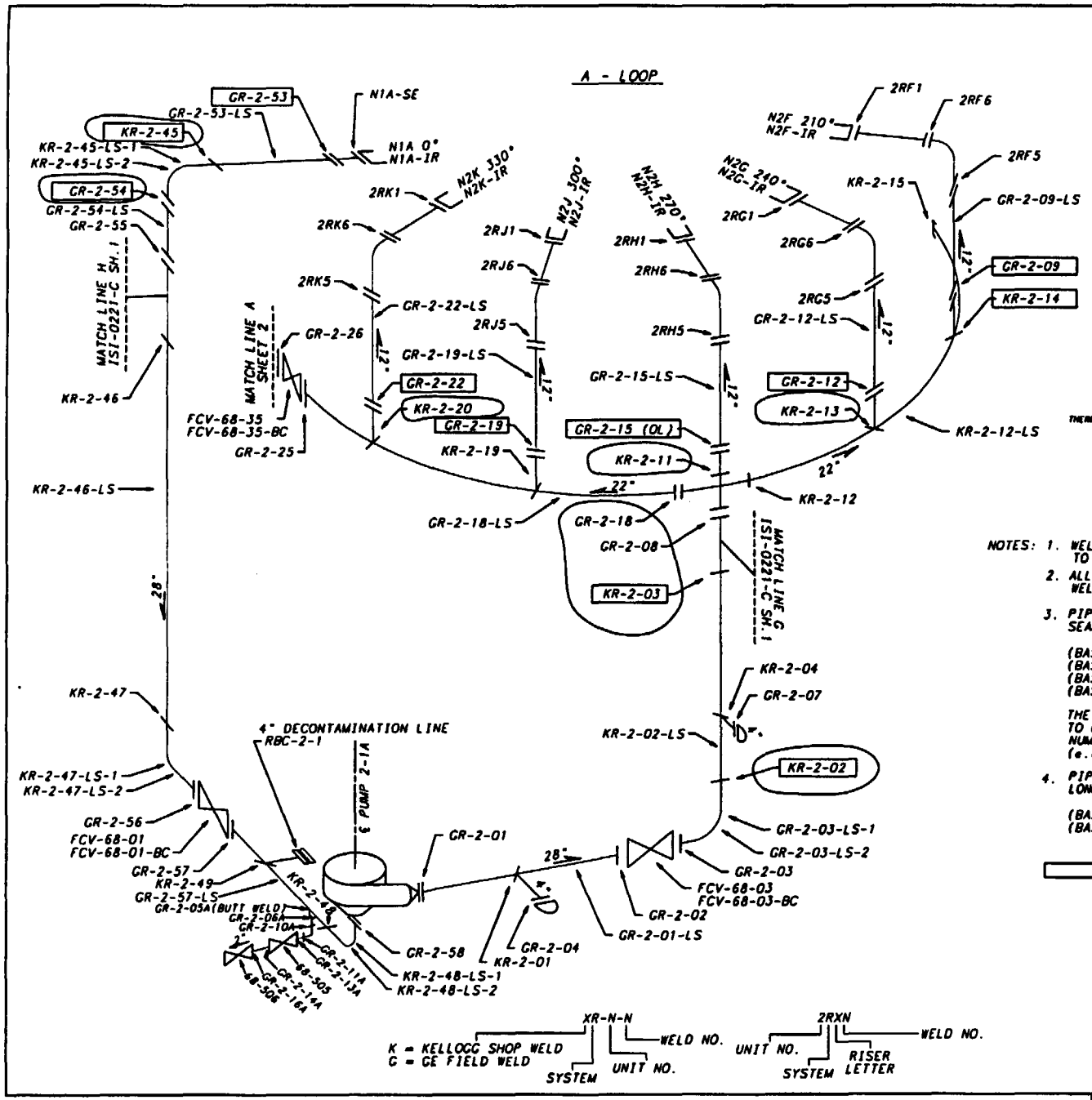

REFERENCE DRAWINGS:

2-47W2408-8,9 (S.E. REPLACEMENT)
GE 769E963 (S.E. REPLACEMENT)
TVA 47K1544-2
GE 2-153F754
KELLOGG BF 2-180
NOTE: THIS DRAWING SUPERSEDES CHM-2068-C ALL SHEETS

MATERIAL SPECIFICATIONS:

A358, TP 304
4" X 0.337" NOM WALL THK. (SS)
12" X 0.569" NOM. WALL THK. (SS)
22" X 1.030" NOM. WALL THK. (SS)
28" X 1.138" NOM. WALL THK. (SS) SUCTION
28" X 1.322" NOM. WALL THK. (SS) DISCHARGE

2" SCH. 80 A-376, TP304
2" FITTINGS A-182, F304

SAFE END REPLACEMENT
12" X 0.688 NOM. WALL THK. (SS)
SA 403 WP 316 N.G.

ASME CC-1 (EQUIVALENT)

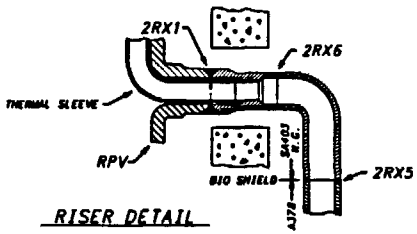

RISER DETAIL

NOTES: 1. WELDS 2RX1 ARE THE NOZZLE TO SAFE-END WELDS

2. ALL 2" WELDS ARE SOCKET WELDED EXCEPT WHERE NOTED.

3. PIPE SEGMENTS CONTAINING TWO LONGITUDINAL SEAMS WILL BE IDENTIFIED AS:

(BASE WELD NO.)-LS-1D (DOWNSTREAM)
(BASE WELD NO.)-LS-2D (DOWNSTREAM)
(BASE WELD NO.)-LS-1U (UPSTREAM)
(BASE WELD NO.)-LS-2U (UPSTREAM)

THE -LS-1 SEAM WILL BE NUMERICALLY CLOSEST TO 0° ON THE PIPE, AND THE -LS-2 SEAM WILL BE NUMERICALLY FARTHERMOST FROM 0° ON THE PIPE. (e.g. -LS-1 AT 130°, AND -LS-2 AT 310°)

4. PIPE SEGMENTS CONTAINING ONLY ONE LONGITUDINAL SEAM WILL BE IDENTIFIED AS

(BASE WELD NO.)-LS-D (DOWNSTREAM)
(BASE WELD NO.)-LS-U (UPSTREAM)

RISK INFORMED WELDS

REV	CHANGE REF	PREPARER	CHECKER	APPROVED	DATE
003	ADMIN	RD LOOSIER	MCH	ALD	12-4-08
REVISED PER RIMS MEMO R14 021202 102					

TENNESSEE VALLEY AUTHORITY

BROWNS FERRY NUCLEAR PLANT
UNIT 2
RECIRCULATION SYSTEM
WELD LOCATIONS

DRAWN: PHB DATE: 9-10-87	SUBMITTED DATE 8-14-88	APPROVED DATE 8-14-88	SCALE NTS SHEET 1 OF 2 SHEET(S)
CHECKED: JES DATE: 6-14-88	EDC	GLB	DRAWING NO. 2-ISI-0270-C REV. 003

ALL A/D HISTORY RESEARCHED AT R000

CAD MAINTAINED DRAWING

CCD

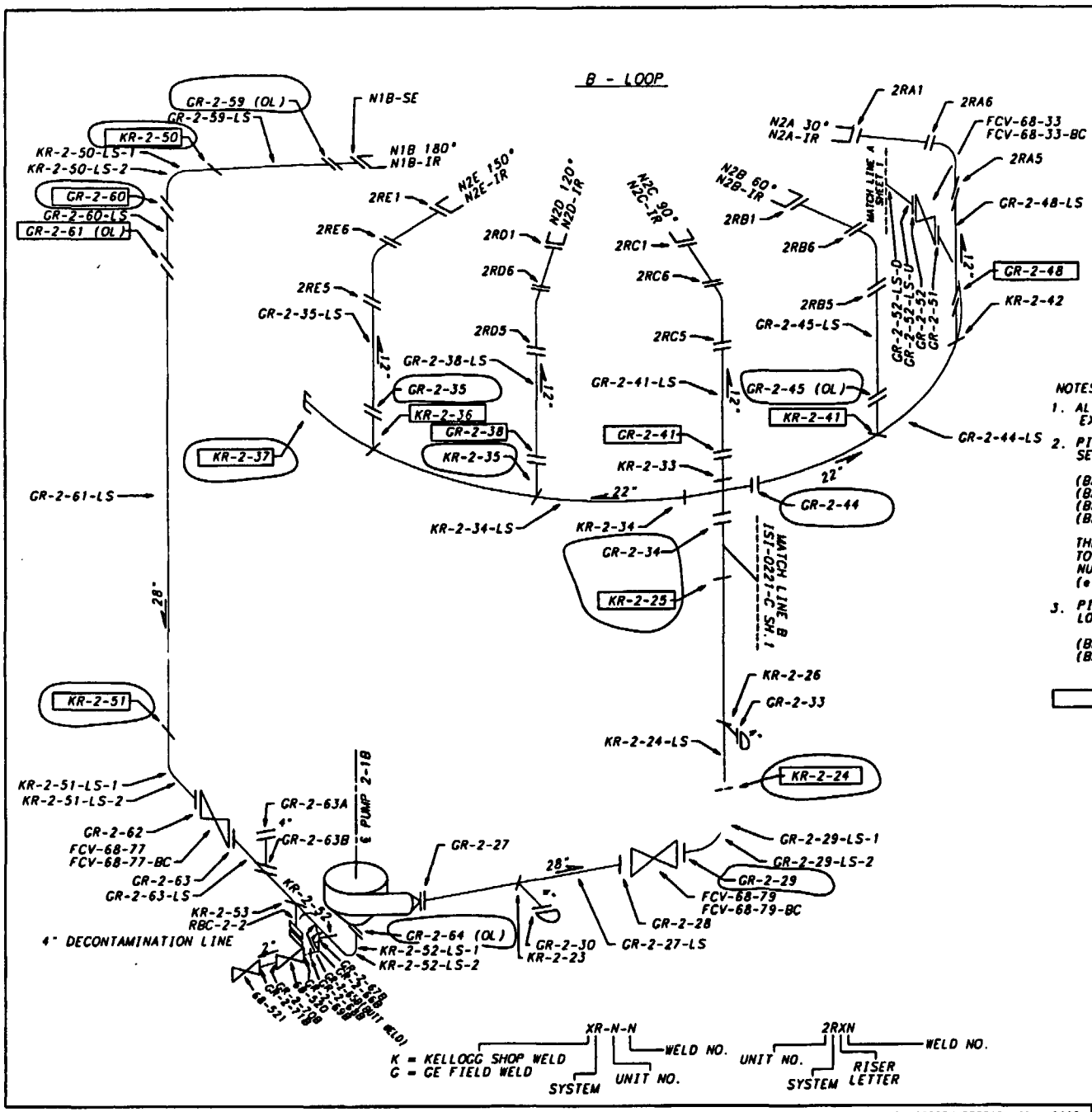

REFERENCE DRAWINGS:

2-47W2408-8.9 (S.E. REPLACEMENT)
GE 769E963 (S.E. REPLACEMENT)
TVA 47K1544-2
GE 2-153F754
KELLOGG BF 2-180
NOTE: THIS DRAWING SUPERSEDES CHM-2068-C ALL SHEETS

MATERIAL SPECIFICATIONS:

A358, TP 304
4" X 0.337" NOM WALL THK. (SS)
12" X 0.569" NOM. WALL THK. (SS)
22" X 1.030" NOM. WALL THK. (SS)
28" X 1.138" NOM. WALL THK. (SS) SUCTION
28" X 1.322" NOM. WALL THK. (SS) DISCHARGE

2" SCH. 80, A376, TP304
2" FITTINGS A182,F304

SAFE END REPLACEMENT
12" X 0.688 NOM. WALL THK. (SS)
SA 403 WP 316 N.G.

ASME CC-1 (EQUIVALENT)

NOTES:

1. ALL 2" WELDS ARE SOCKET WELDED EXCEPT WHERE NOTED.
2. PIPE SEGMENTS CONTAINING TWO LONGITUDINAL SEAMS WILL BE IDENTIFIED AS:

   (BASE WELD NO.)-LS-1D (DOWNSTREAM)
   (BASE WELD NO.)-LS-2D (DOWNSTREAM)
   (BASE WELD NO.)-LS-1U (UPSTREAM)
   (BASE WELD NO.)-LS-2U (UPSTREAM)

   THE -LS-1 SEAM WILL BE NUMERICALLY CLOSEST TO 0° ON THE PIPE, AND THE -LS-2 SEAM WILL BE NUMERICALLY FARTHERMOST FROM 0° ON THE PIPE. (e.g. -LS-1 AT 130°, AND -LS-2 AT 310°)
3. PIPE SEGMENTS CONTAINING ONLY ONE LONGITUDINAL SEAM WILL BE IDENTIFIED AS

   (BASE WELD NO.)-LS-D (DOWNSTREAM)
   (BASE WELD NO.)-LS-U (UPSTREAM)

RISK INFORMED WELDS

REV	CHANGE REF	PREPARER	CHECKER	APPROVED	DATE
004	ADMIN	NO LOOSIER	WCH	RLD	12-11-02
REVISED PER RIMS MEMO R14 021202 102					

TENNESSEE VALLEY AUTHORITY

BROWNS FERRY NUCLEAR PLANT
UNIT 2
RECIRCULATION SYSTEM
WELD LOCATIONS

DRAWN: PHB	SUBMITTED	APPROVED	SCALE NTS
DATE: 3-28-89	DATE 3-8-89	DATE 3-17-89	SHEET 2 OF 2 SHEET(S)
CHECKED: JES	EDC	GLB	DRAWING NO. 2-1S1-0270-C004 REV
DATE: 3-3-89			

CCD

CAD MAINTAINED DRAWING

ALL A/D HISTORY RESEARCHED @ R000

REFERENCE DRAWINGS

DRAVO E-2458-IC-34
DRAVO E-2458-IC-35

NOTE: THIS DRAWING SUPERSEDES CHW-2071-C ALL SHEETS

MATERIAL SPECIFICATIONS

12" SCH. 80 SA 333 GR6 CS
12.75" X .687" NOM. WALL THK.
12" SCH. 80 ASTM A358 GR 304 SS
12.75" X .687" NOM. WALL THK.
10" SCH. 80 SA 333 GR6 CS
10.75" X .593" NOM. WALL THK.
10" SCH. 80 ASTM A358 GR 304 SS
10.75" X .593" NOM. WALL THK.

ASME CC-1 (EQUIVALENT)

RISK INFORMED WELD

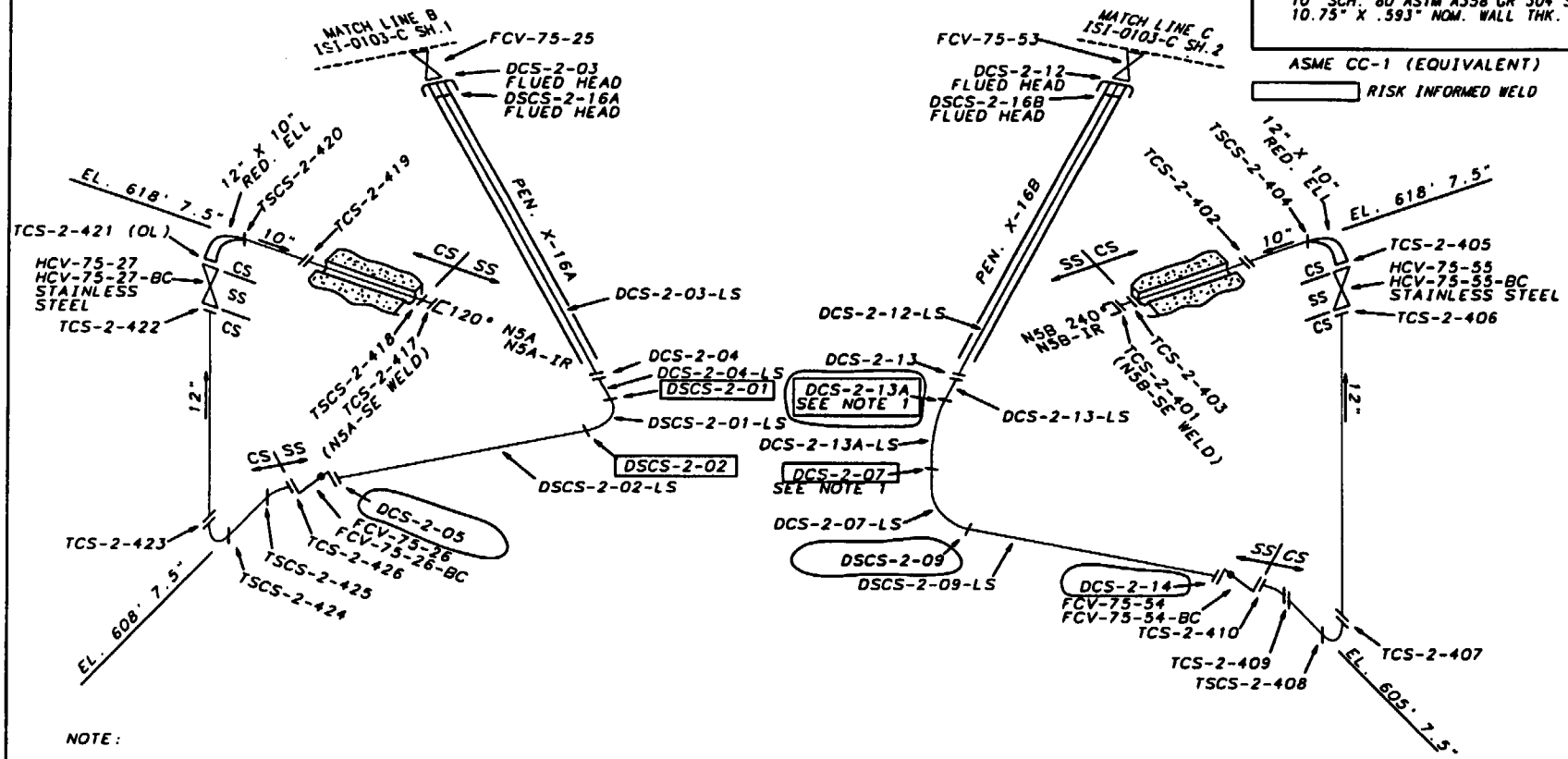

NOTE:

1. WELDS DCS-2-07 AND DCS-2-13A ARE DRAVO SHOP WELDS.
2. PIPE SEGMENTS CONTAINING ONLY ONE LONGITUDINAL SEAM WILL BE IDENTIFIED AS:

(BASE WELD NO.)-LS-D (DOWNSTREAM)
(BASE WELD NO.)-LS-U (UPSTREAM)

DXCS - N - N

CORE SPRAY

D=DRAVO FIELD WELD
DS=DRAVO SHOP WELD
T=TVA FIELD WELD
TS=TVA SHOP WELD

WELD NO.

UNIT NO.

004	ADMIN	RD LOOSIER	WCH	ARLD	12-11-98
REVISED PER RIMS MEMO R14 021202 102					
REV	CHANGE REF	PREPARER	CHECKER	APPROVED	DATE

TENNESSEE VALLEY AUTHORITY

BROWNS FERRY NUCLEAR PLANT
UNIT 2
CORE SPRAY SYSTEM
WELD LOCATIONS

DRAWN: PHB	DATE: 5-17-89	SCALE: NTS	CADAM/ISICMP
CHECKED: JES	APPROVED: GLB	SHEET 01 OF 01	REV
SUBMITTED: EDC		2-ISI-0271-C	004

CAD MAINTAINED DRAWING

CCD

ALL A/D HISTORY RESEARCHED AT R000

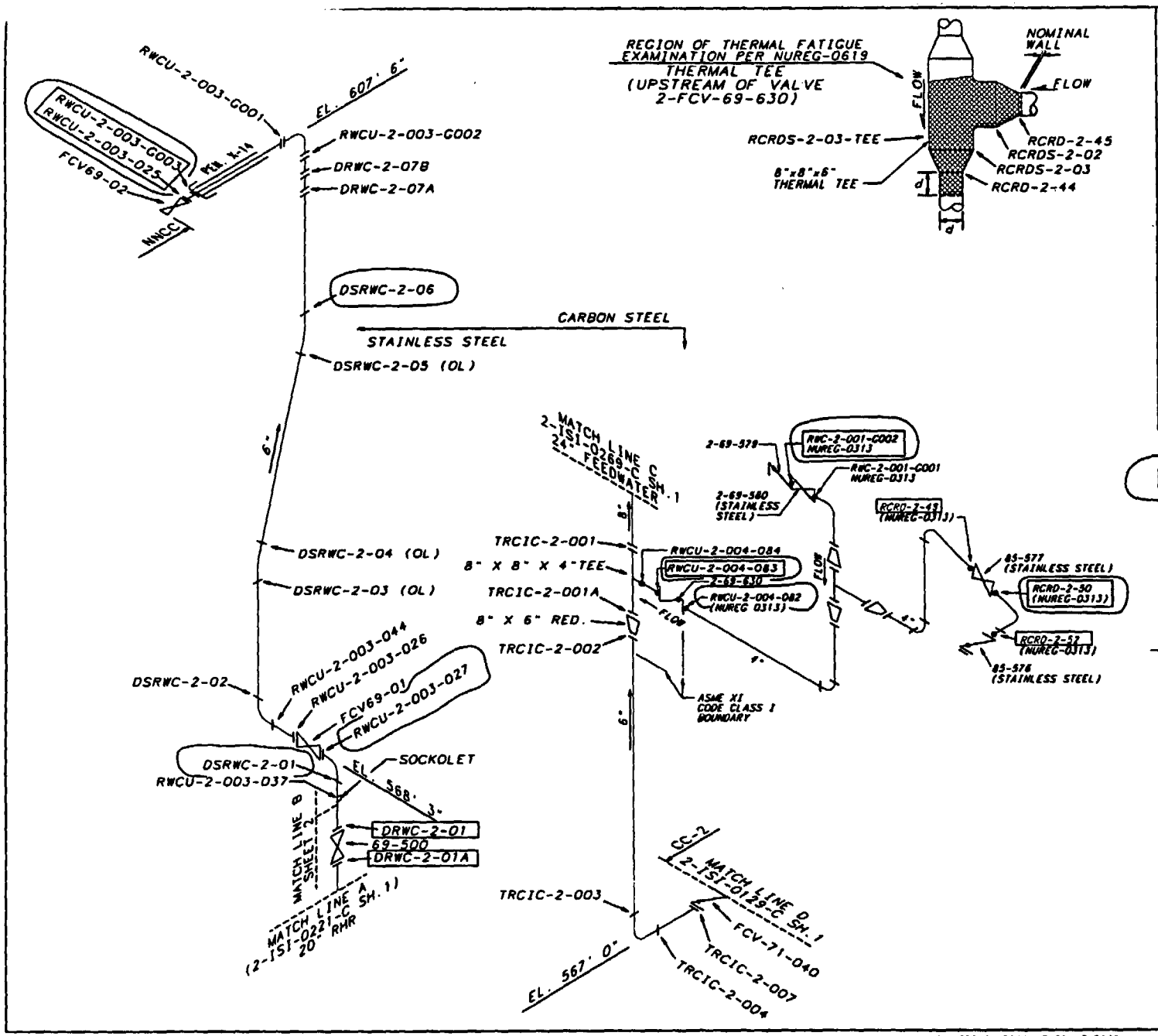

REFERENCE DRAWINGS
CRD-2-005
RCIC-2-004
RWC-2-001
47W355-14, -17

NOTE:
THIS DRAWING SUPERSEDES CHM-2075-C AND CHM-2072-C (ALL SHEETS)

MATERIAL SPECIFICATIONS

STAINLESS STEEL
FITTINGS
6" SA403 WP316NG SCH. 80 SS
PIPING
6" SA376 TP316NG SCH. 80 SS
6" A376GR TP304 SCH. 80 SS
6" A312GR TP304 SCH. 80 SS

CARBON STEEL
4" SCH. 80 A-333, GR1 (SEAMLESS) CS
6" X 0.562" NOM WALL SCH. 120 CS
8" X 0.593" NOM WALL SCH. 100 CS
VALVE
2-69-630 SA182 F316
CRD CAP
4" X 0.674" NOM WALL SS

ASME CC-1 (EQUIVALENT)

RISK INFORMED WELD

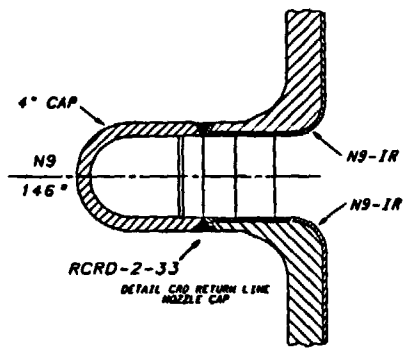

REV	CHANGE REF	PREPARER	CHECKER	APPROVED	DATE
007	ADMIN	RG PHILLIPS	WCH	RLD	12-11-02
REVISED PER RIMS MEMO R14 021202 102					

TENNESSEE VALLEY AUTHORITY

BROWNS FERRY NUCLEAR PLANT
UNIT 2
REACTOR WATER CLEAN UP, RCIC, AND CRD WELD IDENTIFICATION

DRAWN: PHB | DATE: 6-9-88 | SCALE: NTS | CADAM/ISICMP
CHECKED: JES | APPROVED: CLB | SHEET 01 OF 03 | REV
SUBMITTED: EDC | 2-ISI-0272-C | 007

CCD

CAD MAINTAINED DRAWING

ALL A/D HISTORY RESEARCHED AT ROOO

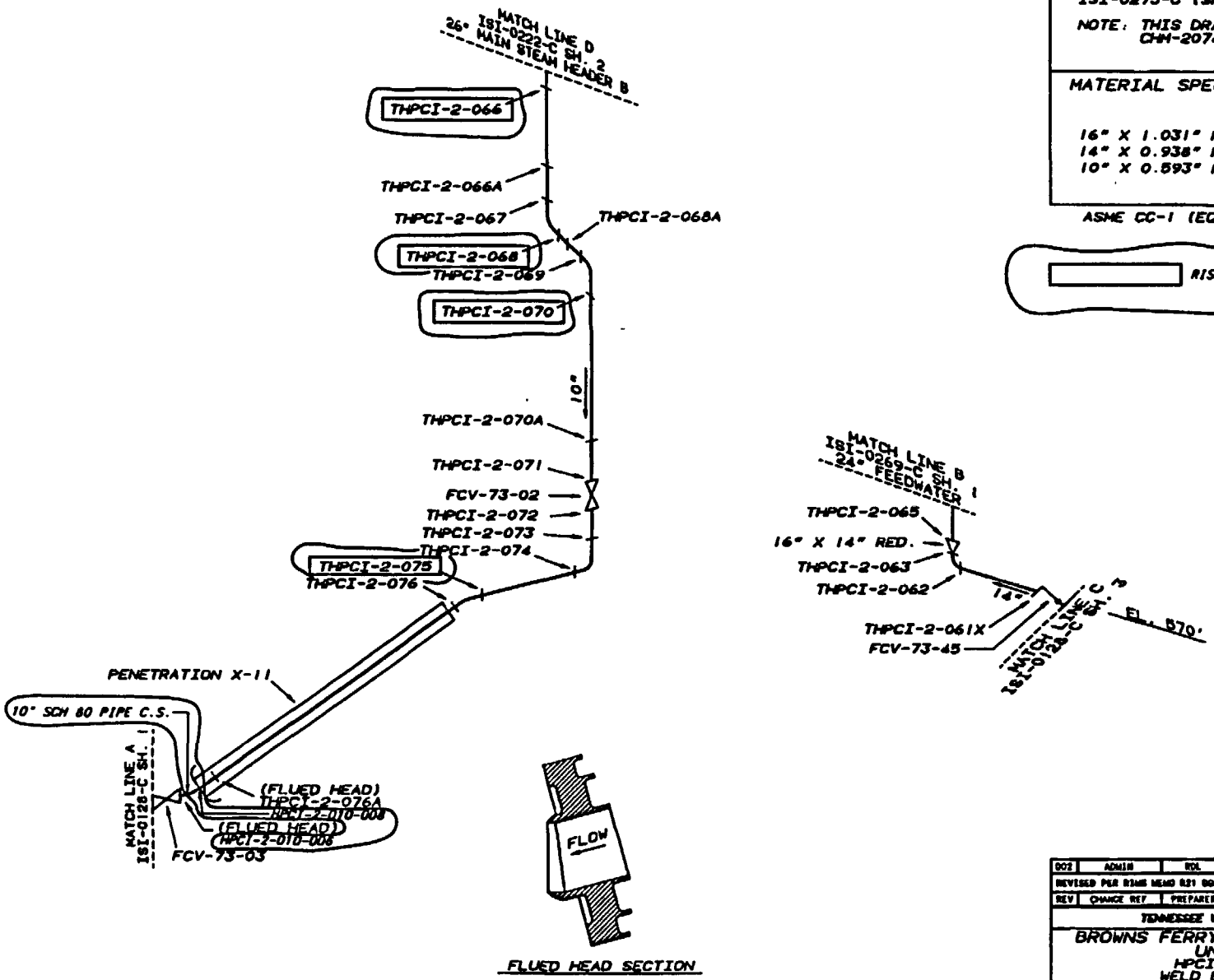

REFERENCE DRAWINGS

TVA 47W335-11
TVA 47W335-12
TVA 47K1547
ISI-0275-C (SH. 1) SUPPORT MAP

NOTE: THIS DRAWING SUPERSEDES CHM-2074-C ALL SHEETS

MATERIAL SPECIFICATIONS

16" X 1.031" NOM. WALL THK, CS
14" X 0.938" NOM. WALL THK, CS
10" X 0.593" NOM. WALL THK, CS

ASME CC-1 (EQUIVALENT)

RISK INFORMED WELD

REV	CHANGE REF	PREPARER	CHECKER	APPROVED	DATE
002	ADMIN	RDL	[illegible]	[illegible]	5-28-01

REVISED PER DIMS MEMO 821 000821 001 & DIMS MEMO 821 010424 002

TENNESSEE VALLEY AUTHORITY

BROWNS FERRY NUCLEAR PLANT
UNIT 2
HPCI SYSTEMS
WELD LOCATIONS

DRAWN: PHB | DATE: 6-9-00 | SCALE: NTS | CHAR/SIZE: CHP
CHECKED: JEB | APPROVED: MLB | SHEET 01 OF 01 | REV
SUBMITTED: EDC | 2-ISI-0273-C | 002

ALL A/D HISTORY RESEARCHED AT 0000

CAD MAINTAINED DRAWING

CCD

REFERENCE DRAWINGS
47W455-4
ISI-0273-C (SH. 1) WELD MAP
NOTE: THIS DRAWING SUPERCEDES CHM-2083-C ALL SHEETS.

LEGEND:
- RIGID HANGER
- VARIABLE SUPPORT
- HYDRAULIC SNUBBER
- MECHANICAL SNUBBER

ASME CC-1 (EQUIVALENT)

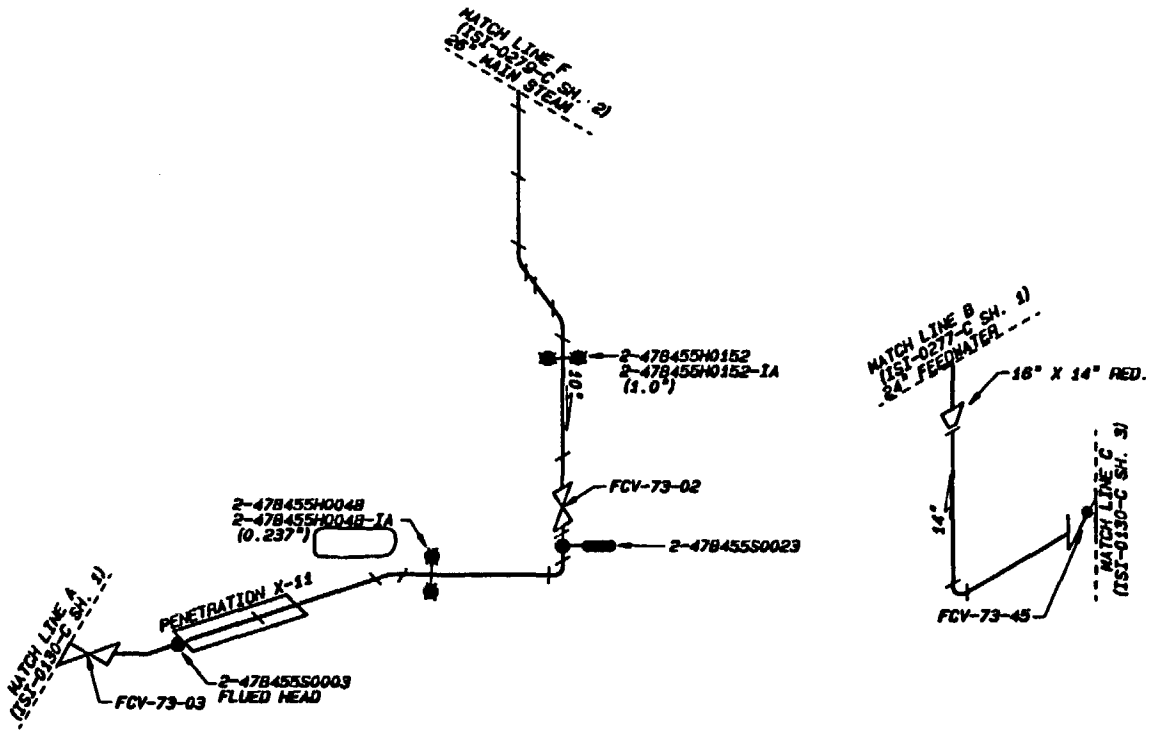

ALL A/D HISTORY RESEARCHED TO R000

REV	CHANGE REF	PREPARER	CHECKER	APPROVED	DATE
000	CCD/ADMIN	RGP	ZLD	HCH	8-30-99

ISSUED TO CREATE CCD, SUPERSEDES A/D ISI-0273-C-1 R000 AND TO DEPICT AS-CONSTRUCTED STATUS PER RTMS MEMO RST 980831 002 (ADMINISTRATIVE REVISION)

TENNESSEE VALLEY AUTHORITY

BROWNS FERRY NUCLEAR PLANT
UNIT 2
HIGH PRESSURE COOLANT INJECTION
SUPPORT LOCATIONS

DRAWN: RPG	SUBMITTED	APPROVED	SCALE: NTS
DATE: 8-31-99	DATE: 8-31-99	DATE: 8-31-99	SHEET 01 OF 01 SHEET(S)
CHECKED: GLB	EDC	GLB	DRAWING NO. 2-ISI-0273-C
DATE: 8-13-99			REV 000

CAD MAINTAINED DRAWING

CCD

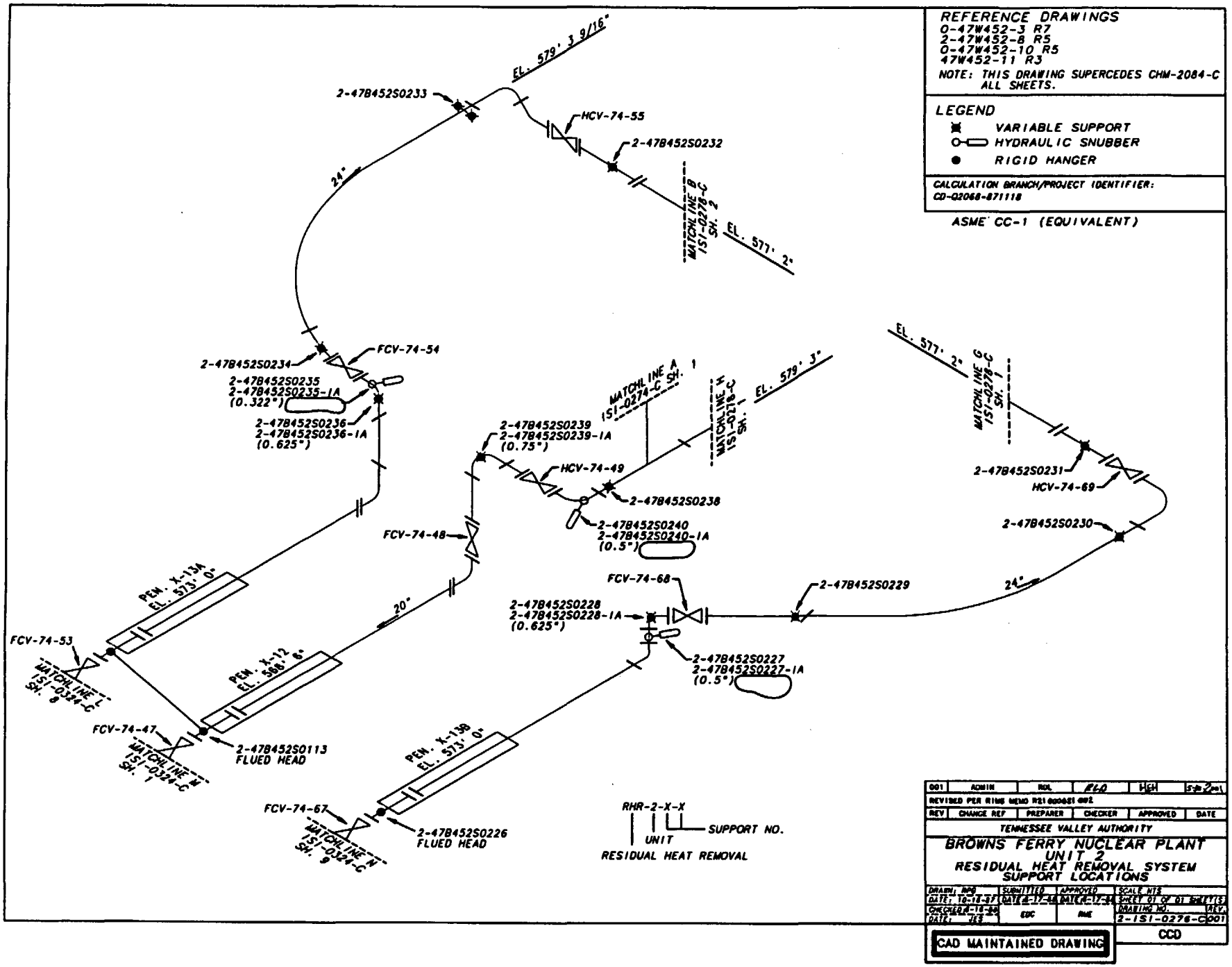
REFERENCE DRAWINGS
0-47W452-3 R7
2-47W452-8 R5
0-47W452-10 R5
47W452-11 R3
NOTE: THIS DRAWING SUPERCEDES CHM-2084-C ALL SHEETS.
LEGEND
VARIABLE SUPPORT
HYDRAULIC SNUBBER
RIGID HANGER
CALCULATION BRANCH/PROJECT IDENTIFIER: CD-Q3068-871118
ASME CC-1 (EQUIVALENT)
EL. 579' 3 9/16"
2-47B452S0233
HCV-74-55
2-47B452S0232
24"
MATCHLINE B 1S1-0278-C SH. 2
EL. 577' 2"
FCV-74-54
2-47B452S0234
2-47B452S0235
2-47B452S0235-1A
(0.322")
2-47B452S0236
2-47B452S0236-1A
(0.625")
MATCHLINE A 1S1-0274-C SH. 1
MATCHLINE H 1S1-0278-C SH. 1
EL. 579' 3"
2-47B452S0239
2-47B452S0239-1A
(0.75")
HCV-74-49
2-47B452S0238
2-47B452S0240
2-47B452S0240-1A
(0.5")
FCV-74-48
20"
PEN. X-13A EL. 573' 0"
FCV-74-53
MATCHLINE L 1S1-0324-C SH. 8
PEN. X-12 EL. 566' 6"
FCV-74-47
MATCHLINE M 1S1-0324-C SH. 7
2-47B452S0113
FLUED HEAD
PEN. X-13B EL. 573' 0"
FCV-74-67
MATCHLINE N 1S1-0324-C SH. 9
2-47B452S0226
FLUED HEAD
FCV-74-68
2-47B452S0228
2-47B452S0228-1A
(0.625")
2-47B452S0227
2-47B452S0227-1A
(0.5")
2-47B452S0229
24"
EL. 577' 2"
MATCHLINE G 1S1-0278-C SH. 1
2-47B452S0231
HCV-74-69
2-47B452S0230
RHR-2-X-X
UNIT
SUPPORT NO.
RESIDUAL HEAT REMOVAL
001 ADMIN RDL FEO HGH 5-22-2001
REVISED PER RIMS MEMO R21 000621 002
REV CHANGE REF PREPARER CHECKER APPROVED DATE
TENNESSEE VALLEY AUTHORITY
BROWNS FERRY NUCLEAR PLANT
UNIT 2
RESIDUAL HEAT REMOVAL SYSTEM
SUPPORT LOCATIONS
DRAWN: MPG
DATE: 10-18-87
SUBMITTED
DATE 6-17-88
APPROVED
DATE 6-17-88
SCALE NTS
SHEET 01 OF 01 SHEET(S)
CHECKED 6-16-88
DATE
EDC
RME
DRAWING NO.
2-1S1-0278-C001
REV.
CAD MAINTAINED DRAWING
CCD

CALCULATION BRANCH/PROJECT IDENTIFIER: CD-Q2003-88978

REFERENCE DRAWINGS
MP2563-88
ISI-0269-C (WELD MAP)
NOTE: THIS DRAWING SUPERSEDES CHM-2085-C ALL SHEETS.

LEGEND
- RIGID HANGER
- VARIABLE SUPPORT
- HYDRAULIC SNUBBER
- MECHANICAL SNUBBER
- CONSTANT FORCE SUPPORT

ASME CC-1 (EQUIVALENT)

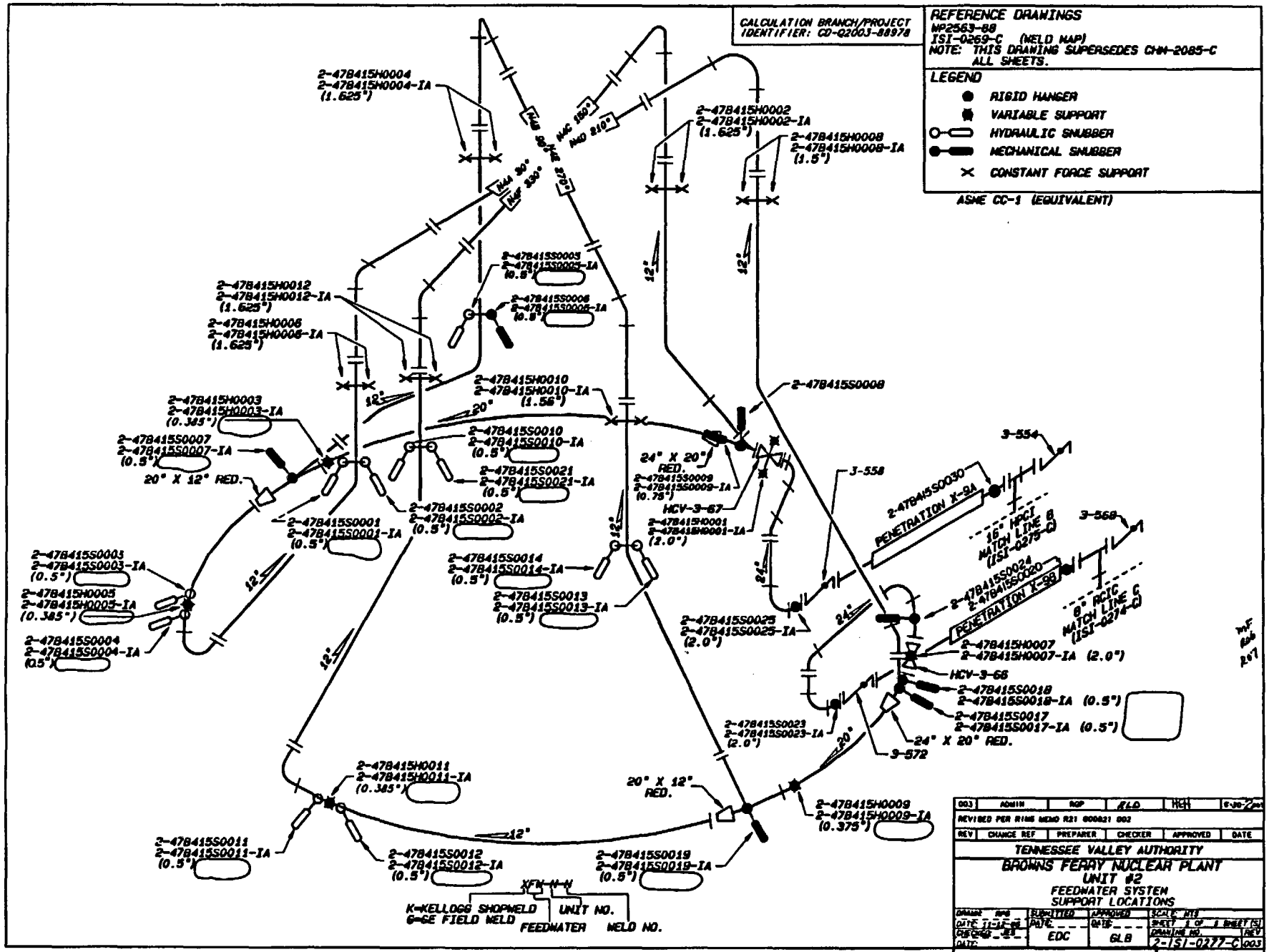

ALL A/D HISTORY RESEARCHED AT R000

REV	CHANGE REF	PREPARER	CHECKER	APPROVED	DATE
003	ADMIN	RGP	KLD	HCH	6-30-2004
REVISED PER RIMS MEMO R21 000021 002					

TENNESSEE VALLEY AUTHORITY
BROWNS FERRY NUCLEAR PLANT
UNIT #2
FEEDWATER SYSTEM
SUPPORT LOCATIONS

DRAWN: RPG	SUBMITTED	APPROVED	SCALE: NTS
DATE: 11-12-86	DATE:	DATE:	SHEET 1 OF 1 SHEET(S)
CHECKED: KLD	EDC	GLB	DRAWING NO. 2-ISI-0277-C REV 003
DATE:			

CAD MAINTAINED DRAWING

CCD

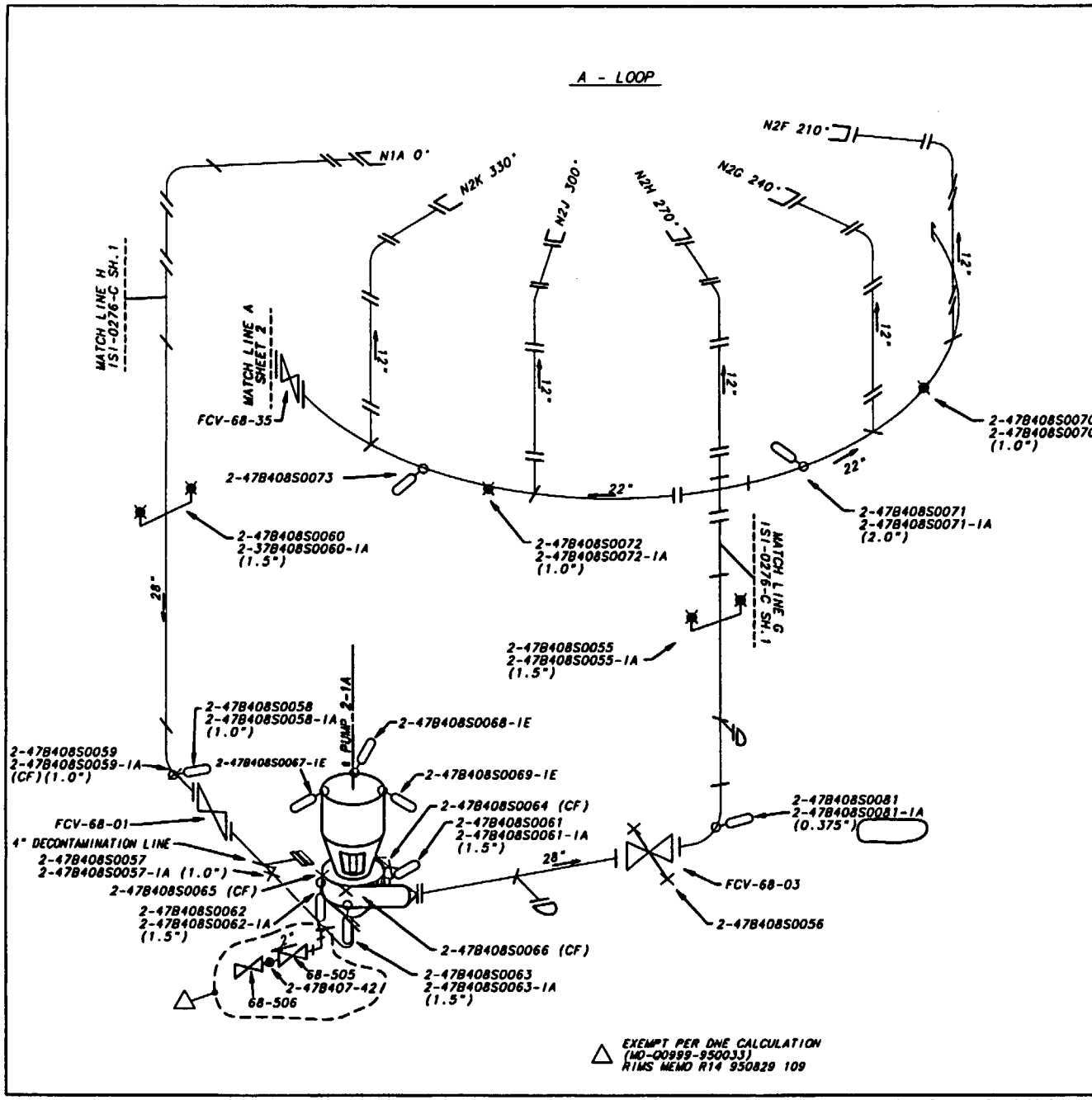

REFERENCE DRAWINGS:

2-47W2408-8,9 (S.E. REPLACEMENT)
GE 769E963 (S.E. REPLACEMENT)
TVA 47K1544-2
2-153F754
KELLOGG BF 2-180
NOTE: THIS DRAWING SUPERSEDES CHW-2068-C ALL SHEETS

LEGEND:

- ● RIGID HANGER
- ▣ VARIABLE SUPPORT
- ○—▭ HYDRAULIC SNUBBER
- × CONSTANT FORCE SUPPORT (CF)

CALCULATION BRANCH/PROJECT IDENTIFIER:

CD-Q2068-871118

ASME CC-1 (EQUIVALENT)

ALL A/D HISTORY RESEARCHED AT R000

REV	CHANGE REF	PREPARER	CHECKER	APPROVED	DATE
003	ADMIN	RDL	WCH	HGH	8-30-2001
	REVISED PER RIMS MEMO R21 000821 002				

TENNESSEE VALLEY AUTHORITY

BROWNS FERRY NUCLEAR PLANT
UNIT 2
RECIRCULATION SYSTEM
SUPPORT LOCATIONS

DRAWN: PHB	SUBMITTED	APPROVED	SCALE NTS
DATE: 8-27-87	DATE 8-10-88	DATE 8-12-88	SHEET 1 OF 3 SHEET(S)
CHECKED: JLB	EDC	GLB	DRAWING NO. 2-1S1-0278-C
DATE: 8-10-88			REV. 003

CAD MAINTAINED DRAWING

CCD

CLCUALTION BRANCH/PROJECT IDENTIFIER: CD-Q2068-871118

REFERENCE DRAWINGS:
TVA 47K1544-2
GE 2-153F754
KELLOGG BF 2-180
NOTE: THIS DRAWING SUPERSEDES CHM-2068-C ALL SHEETS

LEGEND:
- RIGID HANGER
- VARIABLE SUPPORT
- HYDRAULIC SNUBBER
- CONSTANT FORCE SUPPORT (CF)
- RIGID STRUT

ASME CC-1 (EQUIVALENT)

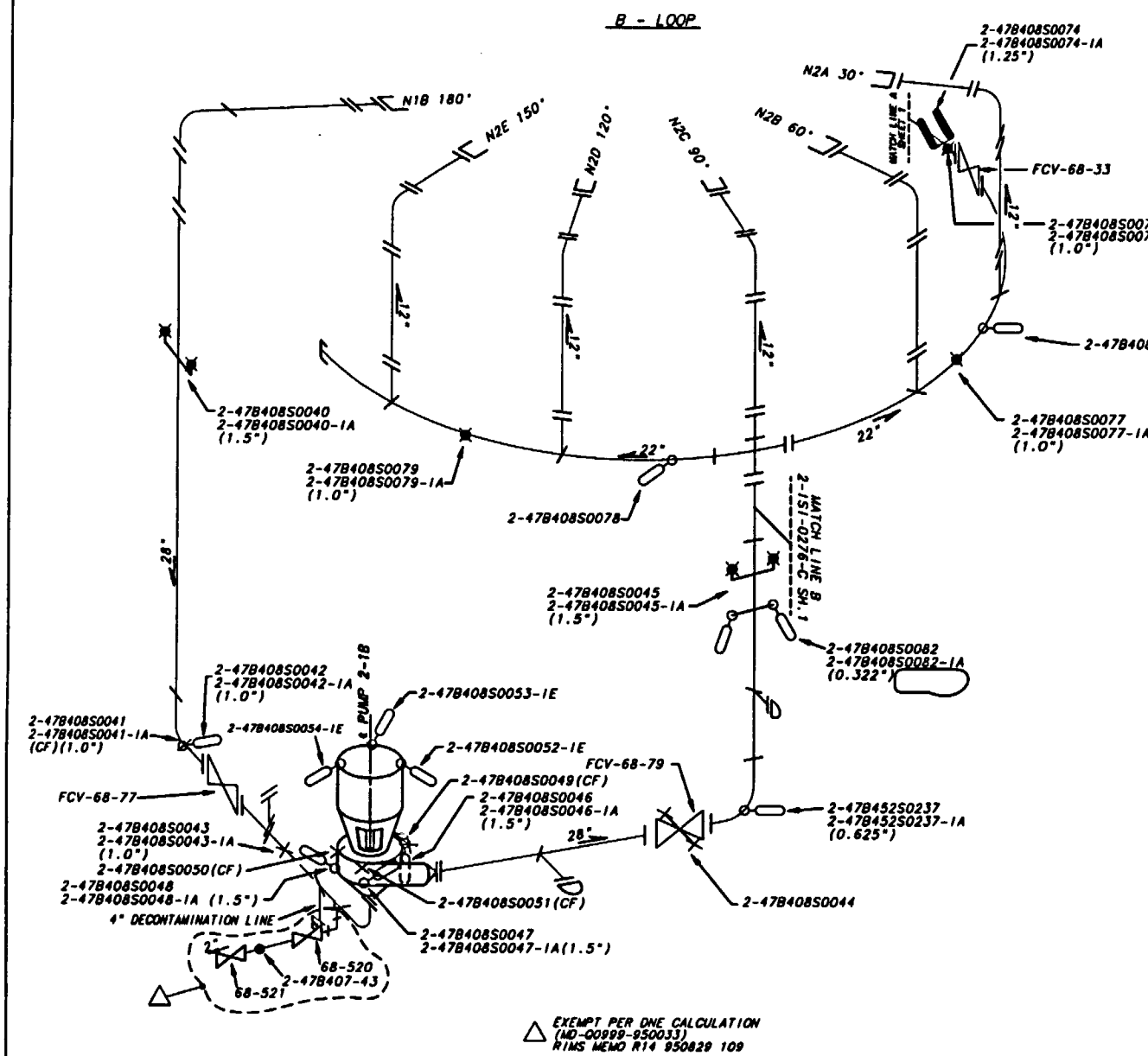

ALL A/D HISTORY RESEARCHED AT R001

REV	CHANGE REF	PREPARER	CHECKER	APPROVED	DATE
003	ADMIN	RDL	WCH	WCH	6-30-2
REVISED PER RIMS MEMO R21 000821 002					

TENNESSEE VALLEY AUTHORITY

BROWNS FERRY NUCLEAR PLANT
UNIT 2
RECIRCULATION SYSTEM
SUPPORT LOCATIONS

DRAWN: PHB	SUBMITTED	APPROVED	SCALE NTS
DATE: 3-30-89	DATE 6-14-88	DATE 5-11-88	SHEET 2 OF 2 SHEET(S)
CHECKED: JFS	EDC	GLB	DRAWING NO. 2-151-0278-C
DATE: 5-8-89			REV. R003

CCD

CAD MAINTAINED DRAWING

CALCULATION BRANCH/PROJECT IDENTIFIERS: CD-02001-88972
CD-02001-88970

REFERENCE DRAWINGS:
GE 729E401 SH. 1 & 2
1SI-0222-C SH. 2 (WELD MAP)
NOTE: THIS DRAWING SUPERCEDES CHM-2087-C SH. 2

LEGEND:
- RIGID HANGER
- VARIABLE SUPPORT
- HYDRAULIC SNUBBER
- CONSTANT FORCE SUPPORT
- MECHANICAL SNUBBER

ASME CC-1 (EQUIVALENT)

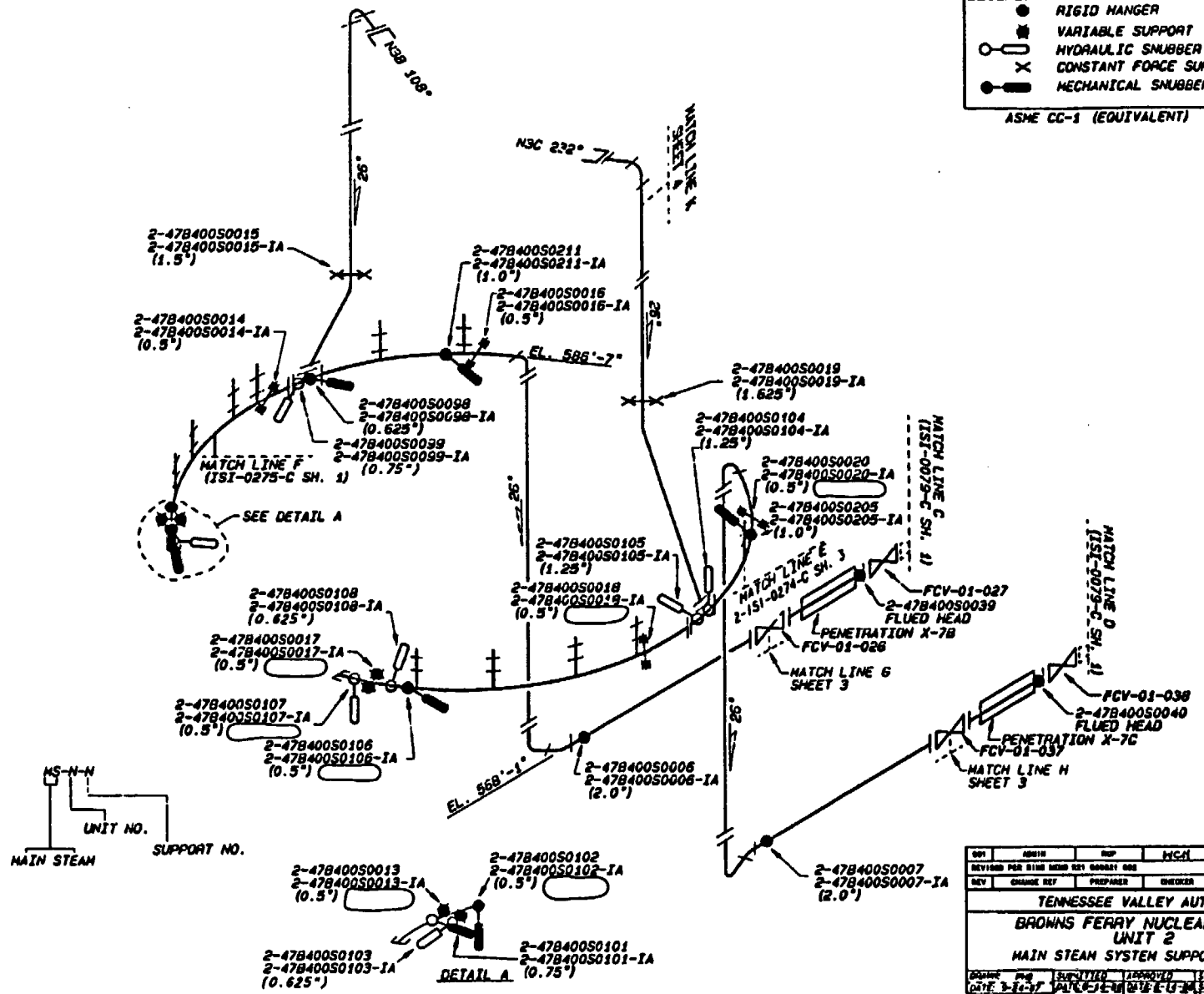

REV	CHANGE REF	PREPARER	CHECKER	APPROVED	DATE
001	ADDED	RKP	MCH	BEH	9-24-2M
	REVISED PER DIMS MEMO 921 000021 000				

TENNESSEE VALLEY AUTHORITY

BROWNS FERRY NUCLEAR PLANT
UNIT 2
MAIN STEAM SYSTEM SUPPORT LOCATIONS

DRAWN	SUBMITTED	APPROVED	SCALE: NTS
DATE: 3-26-97	DATE: 6-26-98	DATE: 6-26-98	SHEET 1 OF 1 SHEET(S)
CHECKED:	EDC	GLB	DRAWING NO. 2-1SI-0279-C REV 000
DATE: 6-26-98			

CCD R001

CAD MAINTAINED DRAWING

ALL A/D HISTORY RESEARCHED TO R000

REFERENCE DRAWINGS:
47N458-1A8
ISI-0271-C (SH. 1) WELD MAP
NOTE: THIS DRAWING SUPERCEDES CHN-2089-C ALL SHEETS.

LEGEND:
■ VARIABLE SUPPORT
O-⊂⊃ HYDRAULIC STRUT

ASME CC-1 (EQUIVALENT)

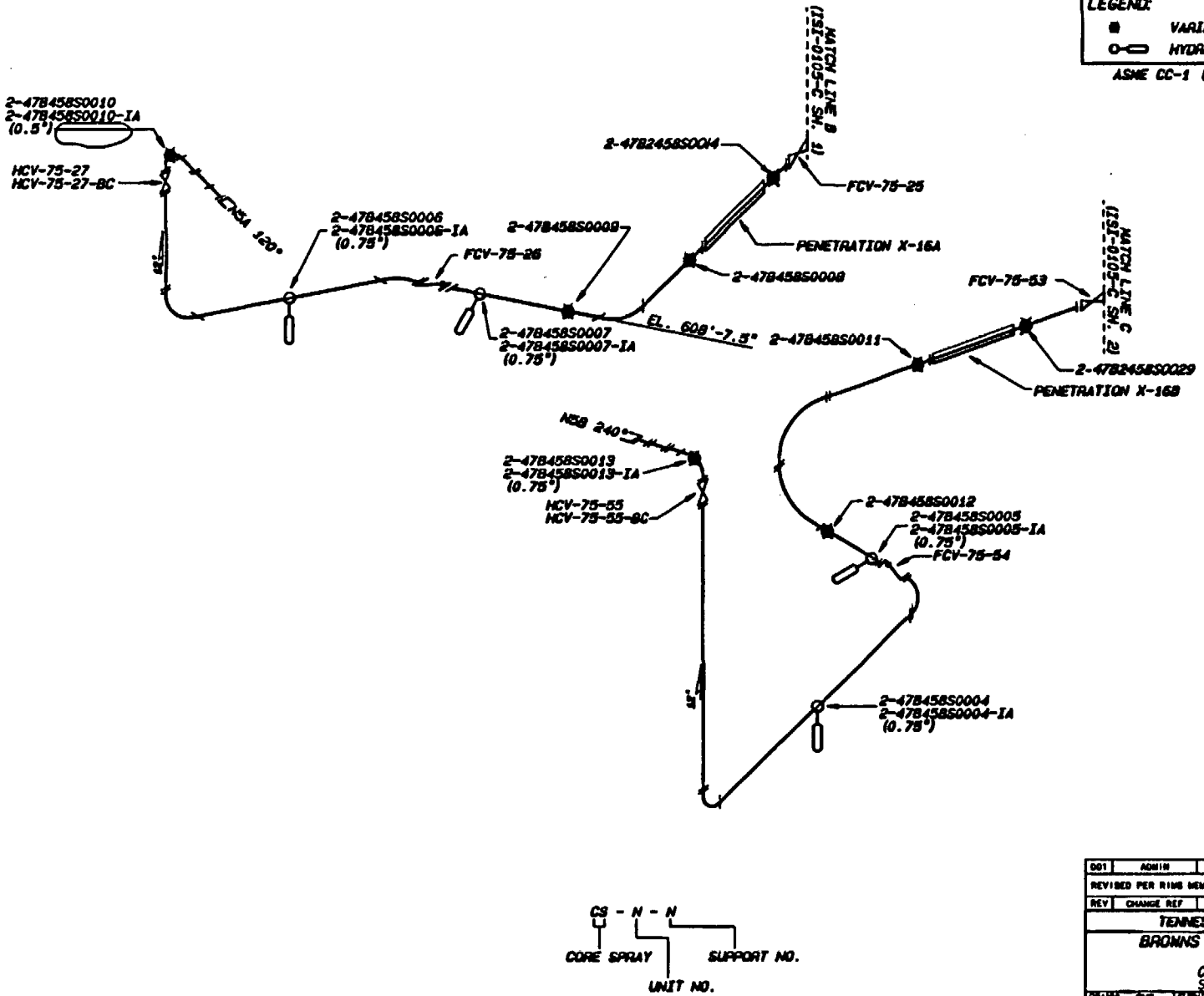

CS - N - N
CORE SPRAY
UNIT NO.
SUPPORT NO.

CAD MAINTAINED DRAWING

REV	CHANGE REF	PREPARER	CHECKER	APPROVED	DATE
001	ADMIN	RDL	MCH	MGH	9-30-97 PM
REVISED PER RIMS MEMO R21 000621 002					

TENNESSEE VALLEY AUTHORITY

BROWNS FERRY NUCLEAR PLANT
UNIT 2
CORE SPRAY SYSTEM
SUPPORT LOCATIONS

DRAWN	SUBMITTED	APPROVED	SCALE NTS
DATE 7-25-97	DATE	DATE	SHEET 1 OF 1 SHEET(S)
REVIEWED	EDC	GLB	DRAWING NO. 2-ISI-0280-C REV 001
DATE			CCD

ALL A/D HISTORY RESEARCHED AT ROOD

REFERENCE DRAWINGS:
2-47E801-1

ASME CC-1 (EQUIVALENT)

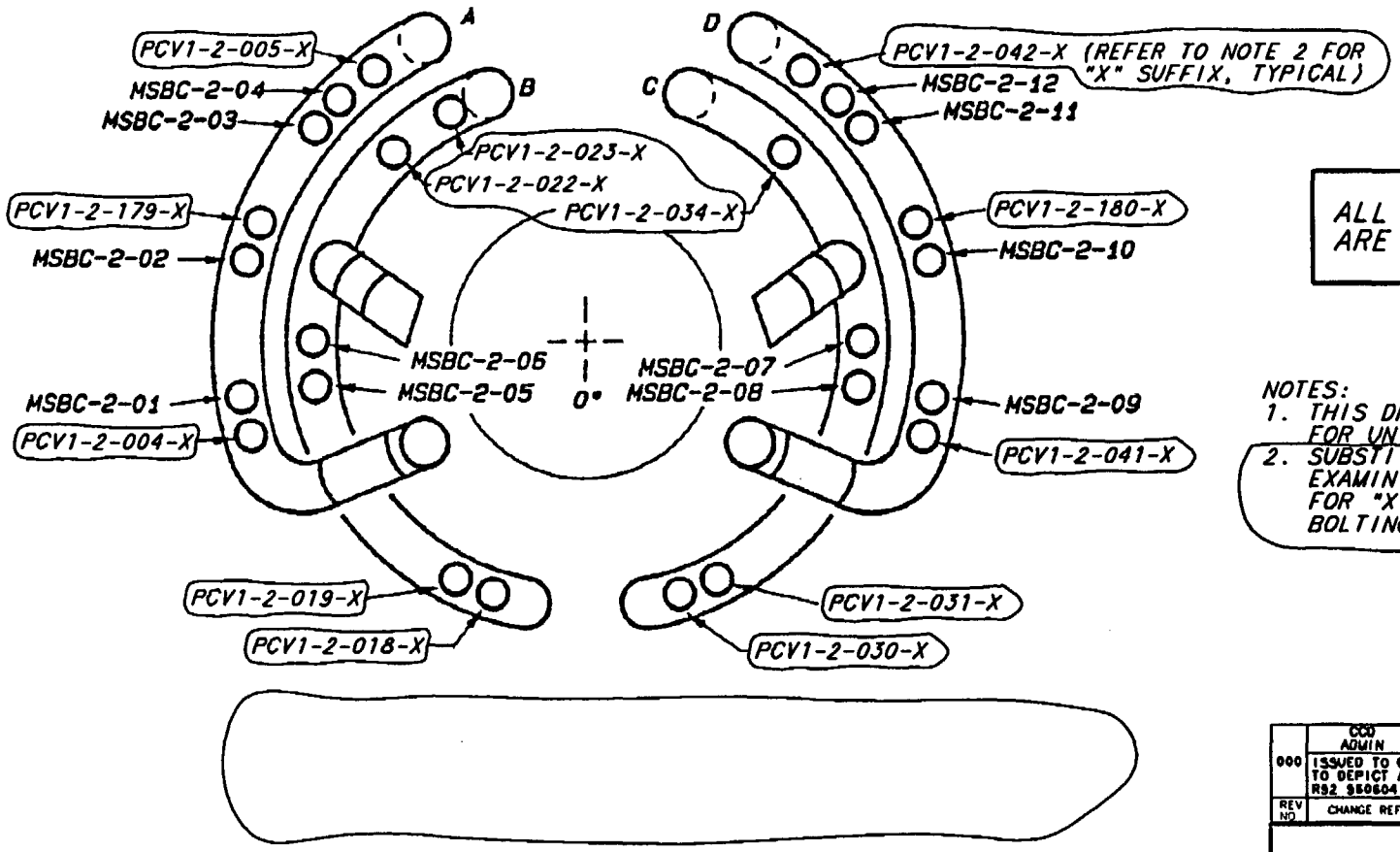

ALL REVISION CIRCLES ARE ADMINISTRATIVE REVISION

NOTES:
1. THIS DRAWING SUPERSEDES 1SI-0027-B FOR UNIT 2 ONLY.
2. SUBSTITUTE "VBC" FOR "X" WHEN EXAMINING VALVE BODY BOLTING AND "PBC" FOR "X" WHEN EXAMINING VALVE TO PIPE BOLTING.

REV NO	CHANGE REF	DATE	DFTR	CHKR	DSGN	RVWR	1 APPD	2 APPD	3 APPD	ISSD
000	CCD ADMIN		BGC		N/A		N/A	N/A		
	ISSUED TO CREATE CCD. SUPERSEDES AS-DESIGNED 1SI-0312-B-1 R2 AND TO DEPICT AS-CONSTRUCTED STATUS PER A/D R0, R1; RIMS MEMO R92 950604 A50 (ADMINISTRATIVE REVISION)									

TENNESSEE VALLEY AUTHORITY

S

BROWNS FERRY NUCLEAR PLANT
UNIT 2
MAINSTEAM SYSTEM
BOLTED CONNECTIONS

DRAWN: PHB	SUBMITTED	APPROVED	SCALE: NTS
DATE: *	DATE: *	DATE: *	SHEET 1 OF 1 SHEET(S)
CHECKED:			DRAWING NO. 2-1SI-0312-B REV 000
DATE: *			CCD

HARDWARE	TEKTRONIX 4129
SOFTWARE	TEKNICAD 8.2
FLOPPY OR TAPE #	FLOPPY #BF4

PROCAD

* FOR ORIGINAL SIGNATURES AND PREVIOUS REV. INFO. SEE "ORIGINAL".

ALL A/D HISTORY RESEARCHED AT R000

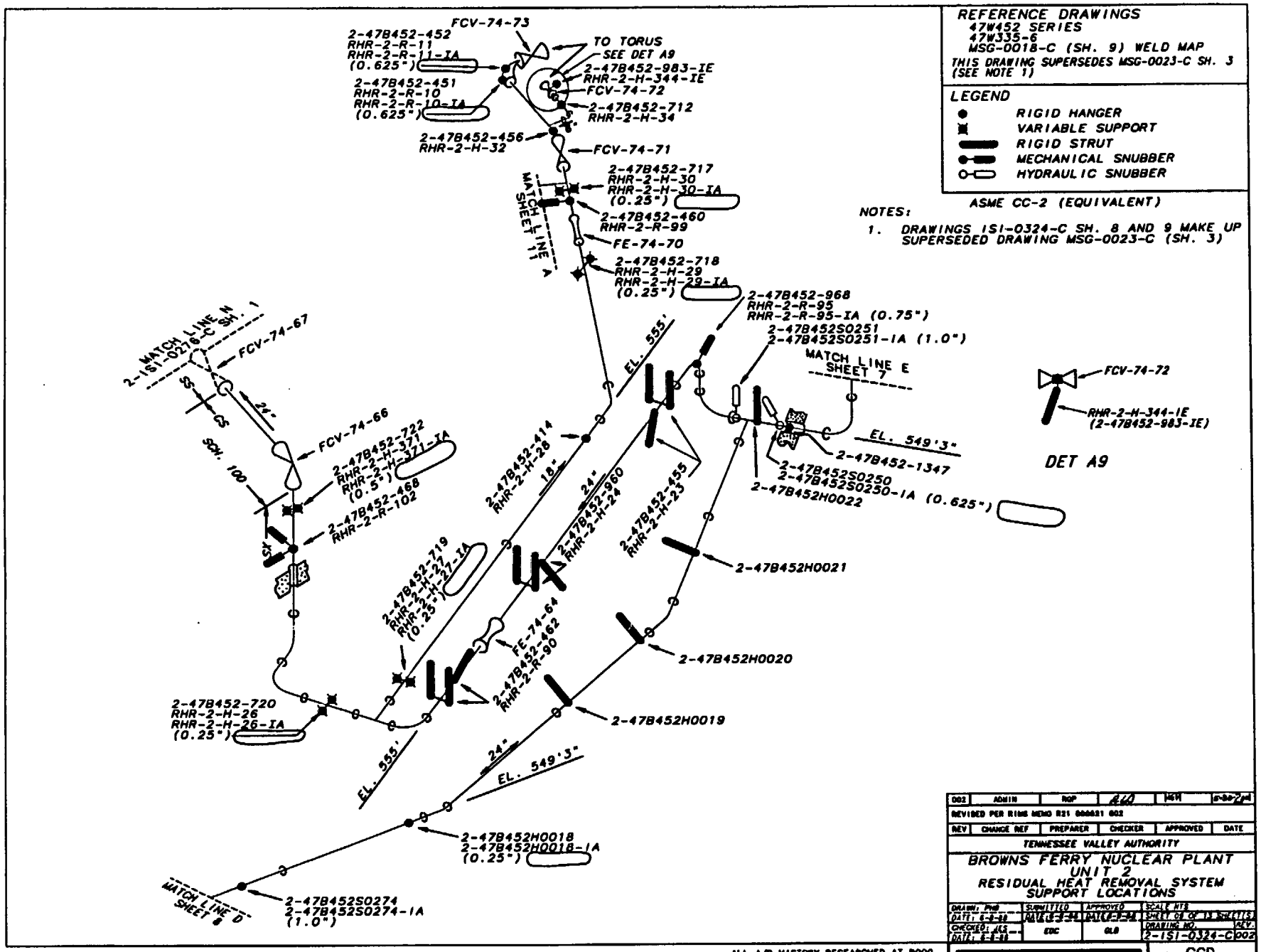

ALL A/D HISTORY RESEARCHED AT R000

REV	CHANGE REF	PREPARER	CHECKER	APPROVED	DATE
002	ADMIN	RGP			

REVISED PER RIMS MEMO R21 000621 002

TENNESSEE VALLEY AUTHORITY

BROWNS FERRY NUCLEAR PLANT
UNIT 2
RESIDUAL HEAT REMOVAL SYSTEM
SUPPORT LOCATIONS

DRAWN: PHB
DATE: 6-8-88
CHECKED: JKS
DATE: 6-8-88
SUBMITTED: EDC
APPROVED: GLB
SCALE: NTS
SHEET 08 OF 13 SHEET(S)
DRAWING NO. 2-1S1-0324-C
REV. 002

CAD MAINTAINED DRAWING

CCD

NOTE: THIS DRAWING SUPERSEDES ISI-0160-A (UNIT 2)

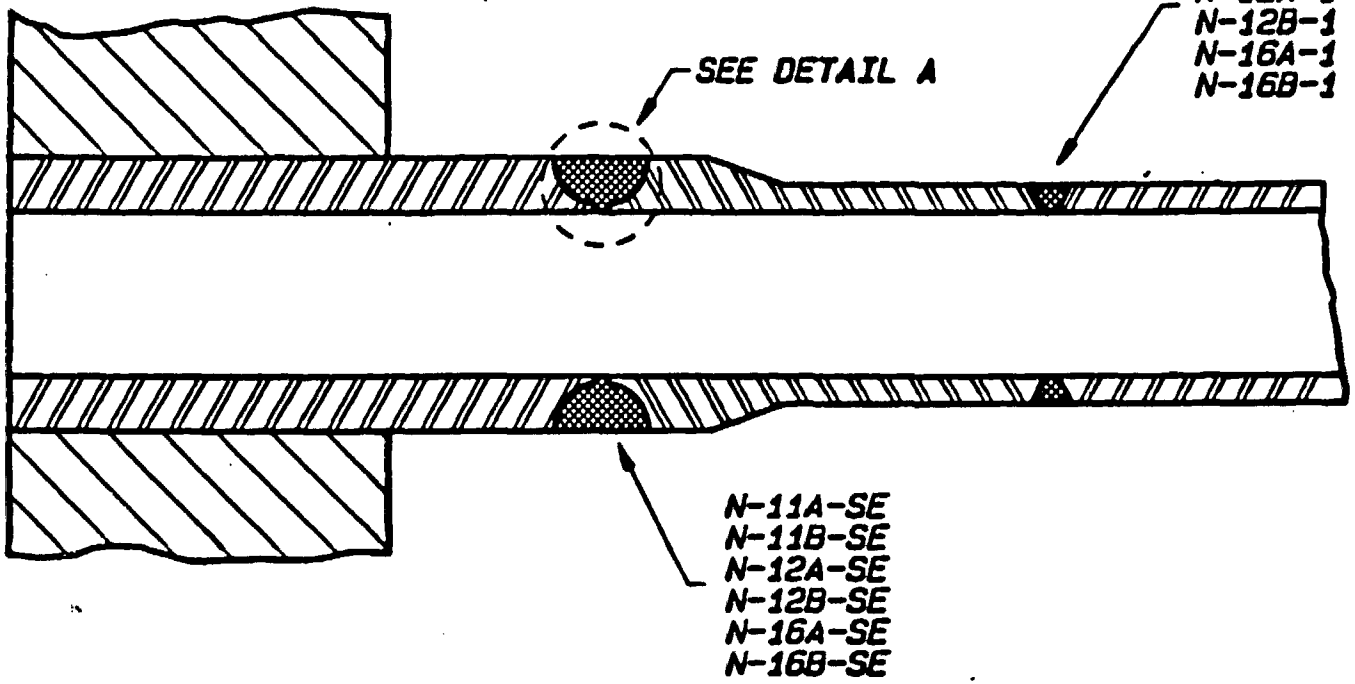

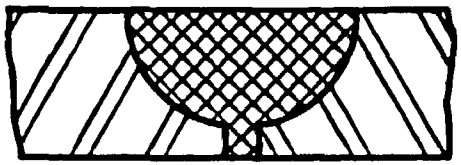

DETAIL A

REV	BY	DATE	DESCRIPTION	CK'D	SUB.	APP.

TENNESSEE VALLEY AUTHORITY

BROWNS FERRY NUCLEAR PLANT
UNIT 2

INSTRUMENTATION NOZZLES
WELD LOCATIONS

DRAWN: RB DATE: 10-11-88	SUBMITTED DATE: 5-18-89	APPROVED DATE: 5-19-89	SCALE: NTS SHEET 1 OF 1 SHEET(S)
CHECKED: DATE: 5-3-89	EDC		DRAWING NO. ISI-0351-A REV. 00

REV	00		
HARDWARE	TEKTRONIX 4129		
SOFTWARE	TEKNICAD 8.2		
FLOPPY OR TAPE #	FLOPPY #8F22		

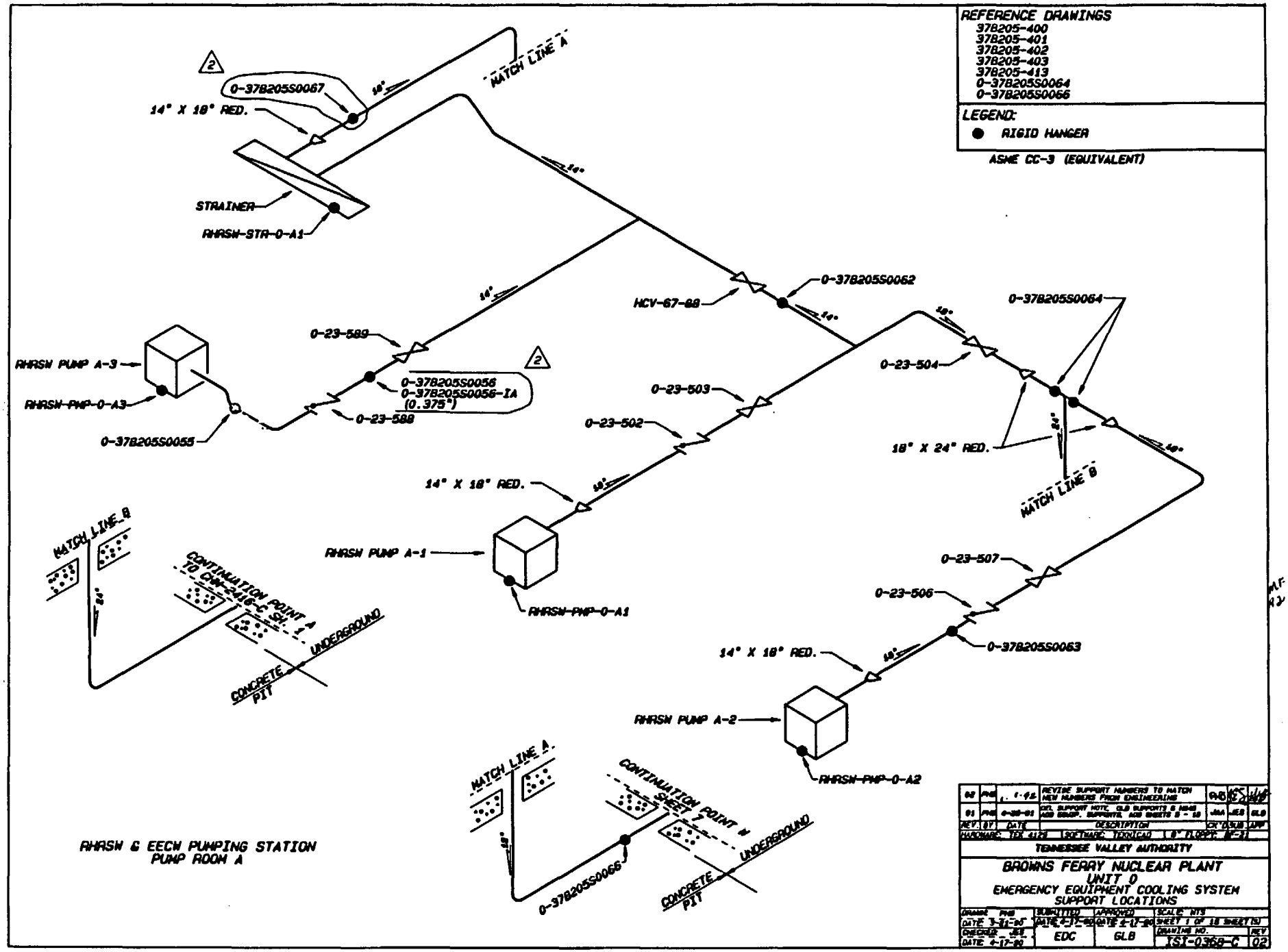
REFERENCE DRAWINGS
37B205-400
37B205-401
37B205-402
37B205-403
37B205-413
0-37B205S0064
0-37B205S0066
LEGEND:
RIGID HANGER
ASME CC-3 (EQUIVALENT)
MATCH LINE A
0-37B205S0067
14" X 18" RED.
STRAINER
RHRSW-STR-0-A1
0-37B205S0062
HCV-67-88
0-37B205S0064
0-23-589
RHRSW PUMP A-3
RHRSW-PMP-0-A3
0-37B205S0056
0-37B205S0056-IA
(0.375")
0-23-588
0-37B205S0055
0-23-504
0-23-503
0-23-502
18" X 24" RED.
MATCH LINE B
14" X 18" RED.
RHRSW PUMP A-1
RHRSW-PMP-0-A1
0-23-507
0-23-506
0-37B205S0063
14" X 18" RED.
RHRSW PUMP A-2
RHRSW-PMP-0-A2
MATCH LINE B
CONTINUATION POINT A
TO CWC-2416-C SH. 1
UNDERGROUND
CONCRETE PIT
MATCH LINE A
CONTINUATION POINT N
SHEET 1
UNDERGROUND
0-37B205S0066
CONCRETE PIT
RHRSW & EECW PUMPING STATION
PUMP ROOM A
TENNESSEE VALLEY AUTHORITY
BROWNS FERRY NUCLEAR PLANT
UNIT 0
EMERGENCY EQUIPMENT COOLING SYSTEM
SUPPORT LOCATIONS
SCALE: NTS
SHEET 1 OF 18 SHEET(S)
DRAWING NO. TST-0368-C
REV 02
SUBMITTED EDC
APPROVED GLB
REVISE SUPPORT NUMBERS TO MATCH NEW NUMBERS FROM ENGINEERING
DESCRIPTION

REFERENCE DRAWINGS

37B205-417
37B205-428
0-37B205S0011
0-37B205S0058
0-37B205S0059
0-37B205S0082
17B300-11

LEGEND:

● RIGID HANGER

ASME CC-3 (EQUIVALENT)

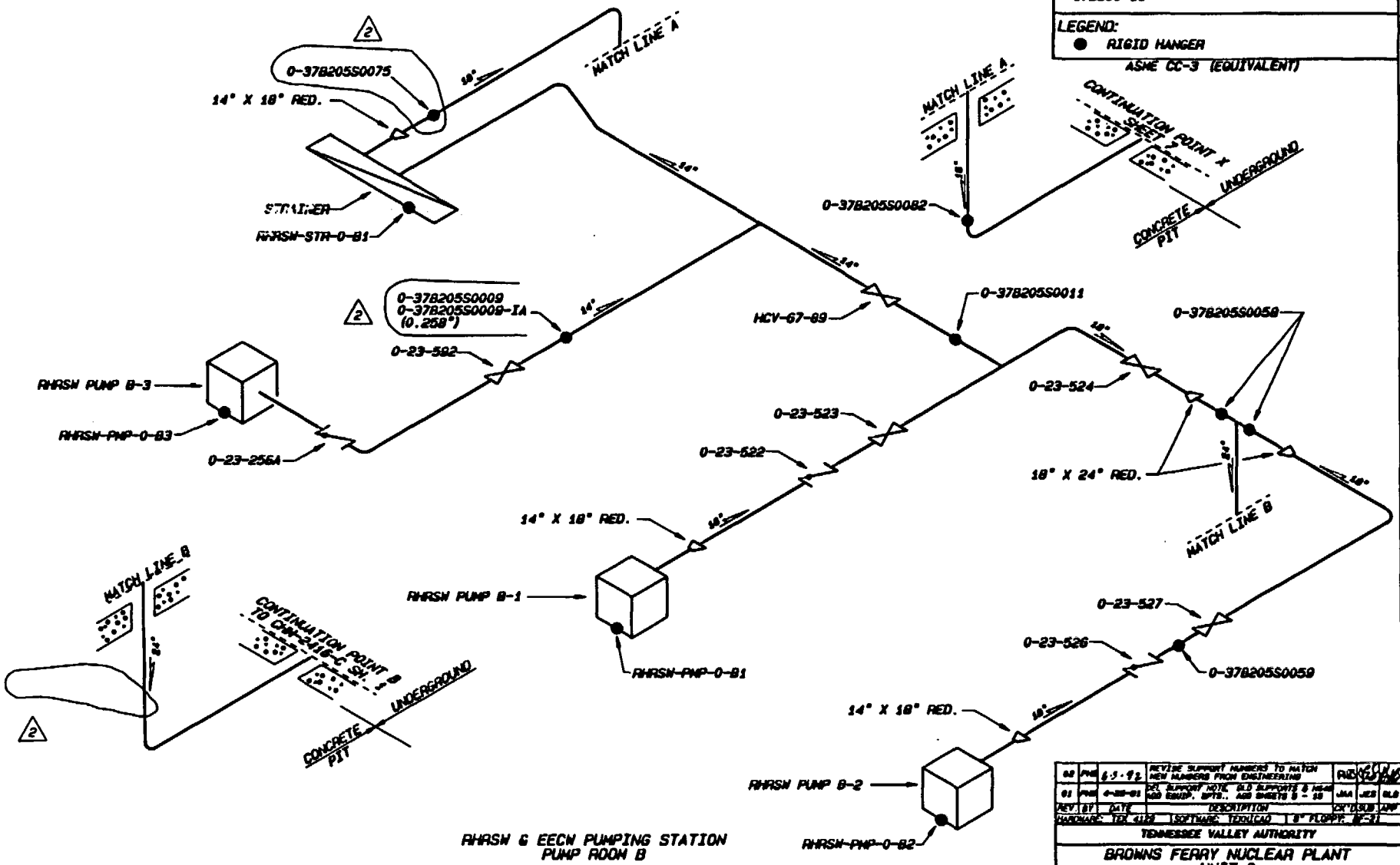

RHRSW & EECW PUMPING STATION
PUMP ROOM B

REV	BY	DATE	DESCRIPTION	CK'D	SUB	APP
00	PHB	6-5-92	REVISE SUPPORT NUMBERS TO MATCH NEW NUMBERS FROM ENGINEERING	PHB	JAA	GLB
01	PHB	4-28-01	ADD SUPPORT NOTE, ADD SUPPORTS & NEW ADD EQUIP. SPTS., ADD SHEETS 5 - 10	JAA	JES	GLB

HARDWARE: TEK 4128 SOFTWARE: TECHCAD 8" FLOPPY: RF-31

TENNESSEE VALLEY AUTHORITY

BROWNS FERRY NUCLEAR PLANT
UNIT 0
EMERGENCY EQUIPMENT COOLING SYSTEM
SUPPORT LOCATIONS

DRAWN: PHB	SUBMITTED	APPROVED	SCALE: NTS
DATE: 3-31-98	DATE: 4-12-00	DATE: 4-12-00	SHEET 2 OF 10 SHEET(S)
CHECKED: JES	EDC	GLB	DRAWING NO. TSI-0368-C
DATE: 6-17-00			REV 02

REFERENCE DRAWINGS
47W586 SERIES

LEGEND
● RIGID HANGER
▬ RIGID STRUT

ASME CC-3 (EQUIVALENT)

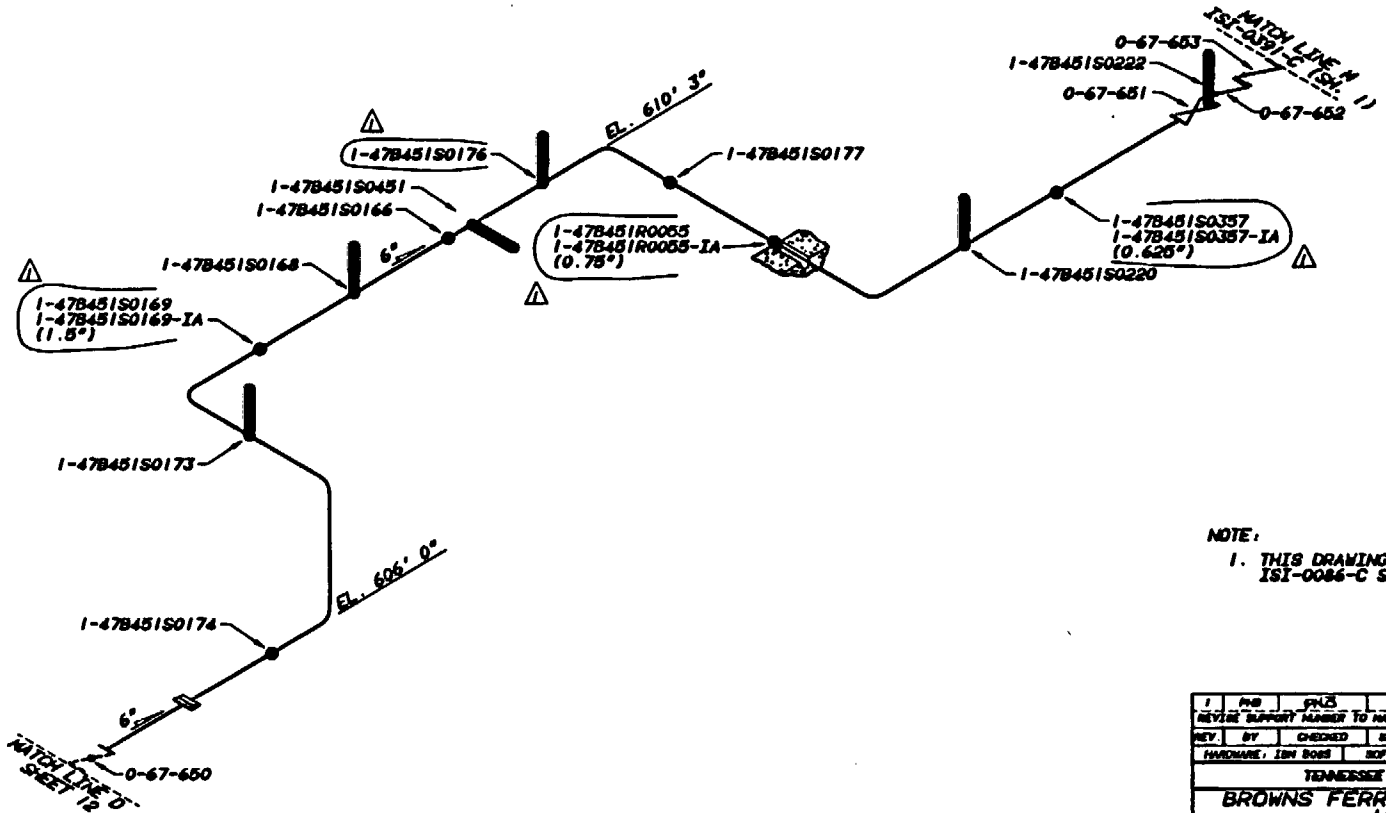

NOTE:
1. THIS DRAWING SUPERSEDES ISI-0086-C SH. 6 REV. 1

REV.	BY	CHECKED	SUBMITTED	APPROVED	DATE
1	PHB	PHB	[illegible]	[illegible]	1-9-92
REVISE SUPPORT NUMBER TO MATCH NEW NUMBER FROM ENGINEERING					
HARDWARE: IBM 8088		SOFTWARE: CADAM		USER: ISICHP	

TENNESSEE VALLEY AUTHORITY

BROWNS FERRY NUCLEAR PLANT
UNIT 0
EMERGENCY EQUIPMENT COOLING WATER SYSTEM
SUPPORT LOCATIONS

DRAWN: PHB	SUBMITTED	APPROVED	SCALE NTS
DATE: 4-16-91	DATE: 4-16-91	DATE: 4-24-91	SHEET 14 OF 18 SHEETS
CHECKED: JAA	JES	GLB	DRAWING NO. ISI-0368-C01 REV.
DATE: 4-16-91			

REFERENCE DRAWINGS:
47W462 SERIES
47B462 SERIES
2-47E854-1

MATERIAL SPECIFICATIONS:
PIPING
1 1/2" & 2" SCH. 80 A-312 TP 304
FITTINGS
A182 F304, SCH. 80

ASME CC-1 (EQUIVALENT)

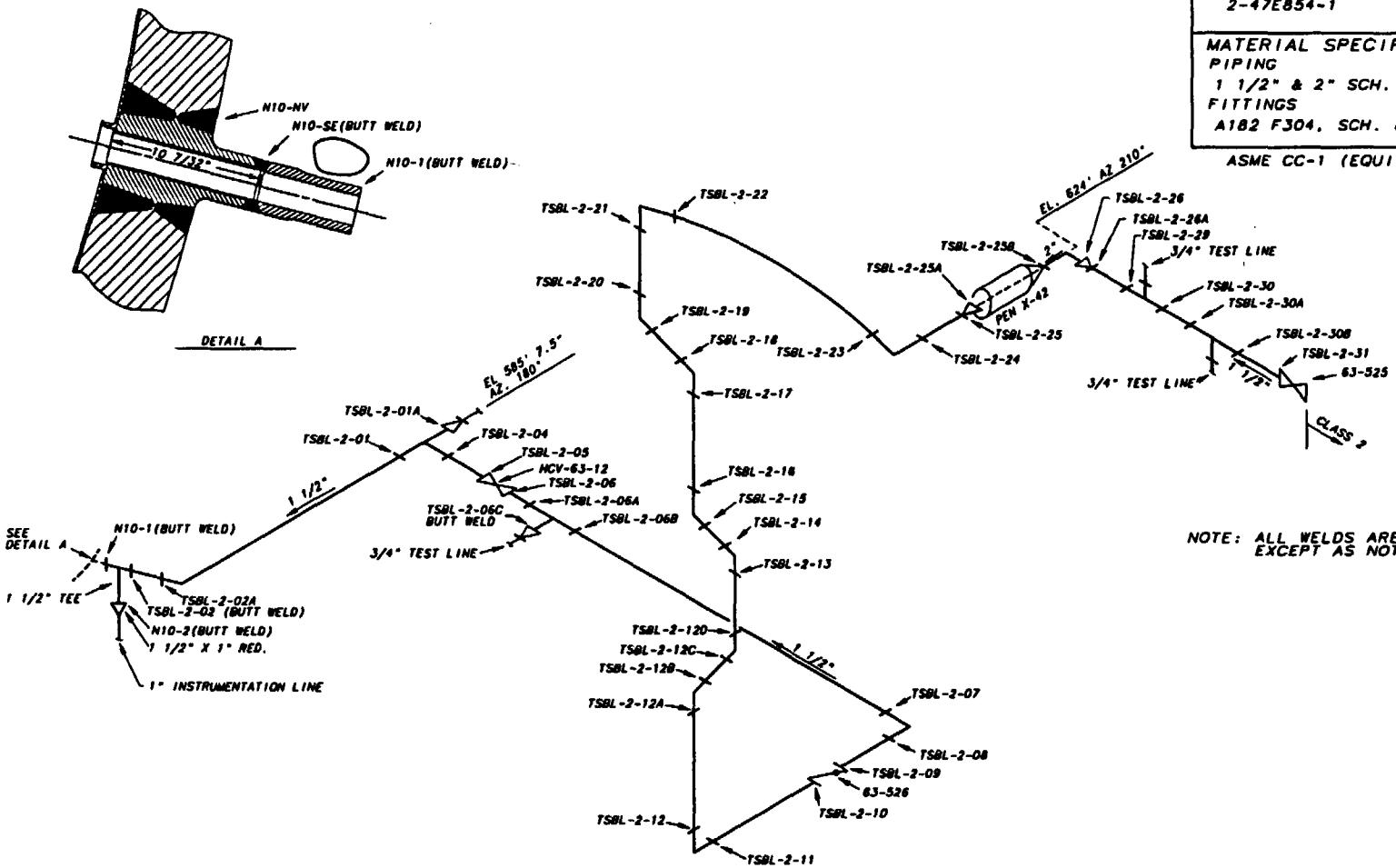

NOTE: ALL WELDS ARE SOCKET WELDED EXCEPT AS NOTED.

REV	CHANGE REF	PREPARER	CHECKER	APPROVED	DATE
001	ADMIN	RDL	WCH	[illegible]	9-29-91

REVISED PER RIMS MEMO R21 000821 001

TENNESSEE VALLEY AUTHORITY

BROWNS FERRY NUCLEAR PLANT
UNIT 2
STANDBY LIQUID CONTROL 1" TO 3"
WELD LOCATIONS

DRAWN: PHB	DATE: 9-29-91	SCALE: NTS	CADAM/TECHP
CHECKED: JAA	APPROVED: GLB	SHEET 01 OF 01	REV
SUBMITTED: JES		2-1S1-0380-C	001

CAD MAINTAINED DRAWING

CCD

ALL A/D HISTORY RESEARCHED AT R000

REFERENCE DRAWINGS:
2-47E803-5
2-47W2650-100
2-47E600-602
47BM600-SERIES
0-47W600-20

MATERIAL SPECIFICATIONS:
PIPING
A312 OR A376 GR. TP-304 OR TP-316
SCH. 80
FITTINGS
A182 GR. F-316

ASME CC-1 (EQUIVALENT)

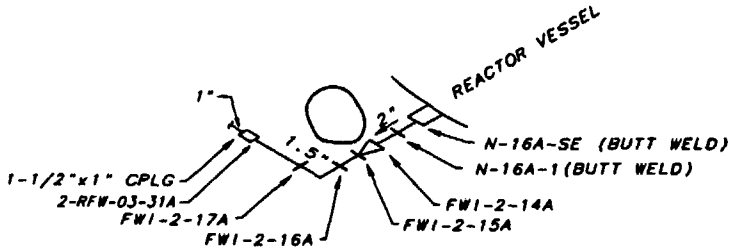

NOZZLE N-16A
REF. DWG. 1S1-0351-A

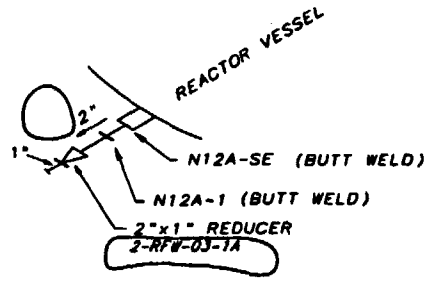

NOZZLE N-12A
REF. DWG. 1S1-0351-A

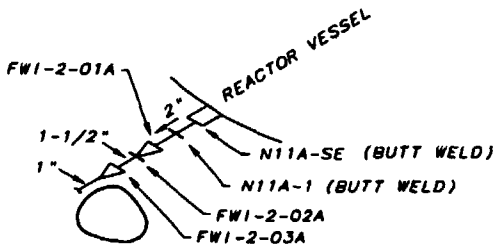

NOZZLE N-11A
REF. DWG. 1S1-0351-A

ALL A/D HISTORY RESEARCHED AT ROOO

REV	CHANGE REF	PREPARER	CHECKER	APPROVED	DATE
001	ADMIN	RDL	RLO	RCH	6-29-94
REVISED PER RIMS MEMO R21 000621 001					

TENNESSEE VALLEY AUTHORITY

BROWNS FERRY NUCLEAR PLANT
UNIT 2
FEEDWATER INSTRUMENTATION
WELD LOCATIONS

DRAWN: PMB	SUBMITTED	APPROVED	SCALE NTS
DATE: 9-17-81	DATE: 9-18-81	DATE: 9-18-81	SHEET 01 OF 03 SHEET(S)
CHECKED: JN	JFS	GLB	DRAWING NO. 2-1S1-0383-C
DATE: 9-20-81			REV. 001

CAD MAINTAINED DRAWING

CCD

REFERENCE DRAWINGS:
2-47E803-5
2-47W2650-100
2-47E600-601
47BM600-SERIES
0-47W600-20

MATERIAL SPECIFICATIONS:
PIPING
A312 OR A376 GR. TP-304 OR TP-316
SCH. 80
FITTINGS
A182 GR. F-316

ASME CC-1 (EQUIVALENT)

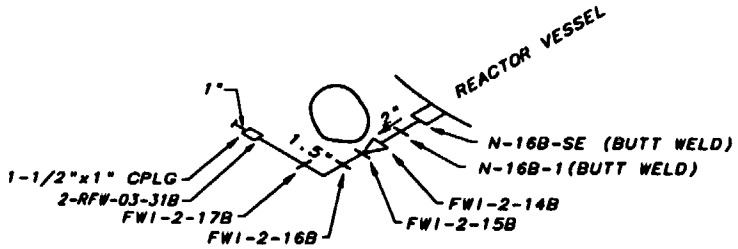

NOZZLE N-16B
REF. DWG. ISI-0351-A

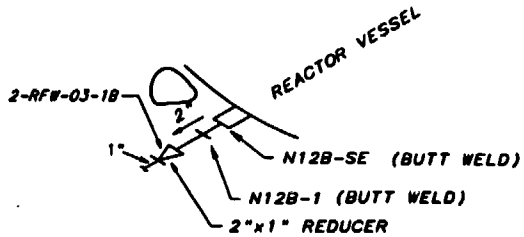

NOZZLE N-12B
REF. DWG. ISI-0351-A

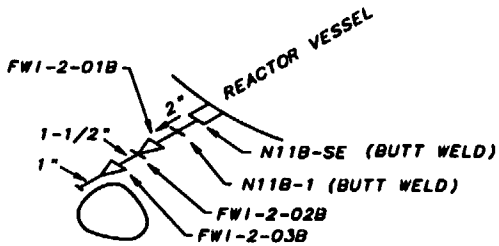

NOZZLE N-11B
REF. DWG. ISI-0351-A

REV	CHANGE REF	PREPARER	CHECKER	APPROVED	DATE
001	ADMIN	RDL	ZLD	HEH	6-28-94
REVISED PER RIMS MEMO R21 000621 001					

TENNESSEE VALLEY AUTHORITY

BROWNS FERRY NUCLEAR PLANT
UNIT 2
FEEDWATER INSTRUMENTATION
WELD LOCATIONS

DRAWN: PHB	SUBMITTED	APPROVED	SCALE NTS
DATE: 8-17-81	DATE: 8-24-81	DATE: 8-28-81	SHEET 03 OF 03 SHEETS
CHECKED: JRC	JCS	GLB	DRAWING NO. 2-ISI-0383-C REV. 001
DATE: 8-20-81			

CAD MAINTAINED DRAWING

CCD

ALL A/D HISTORY RESEARCHED AT R000

REFERENCE DRAWINGS
69-BF-165 PERFEX CORP.
69-D-160-05 PERFEX CORP.
NOTE: THIS DRAWING SUPERSEDES ISI-0314-B

MATERIAL SPECIFICATIONS
AS NOTED

ASME CC-2 (EQUIVALENT)

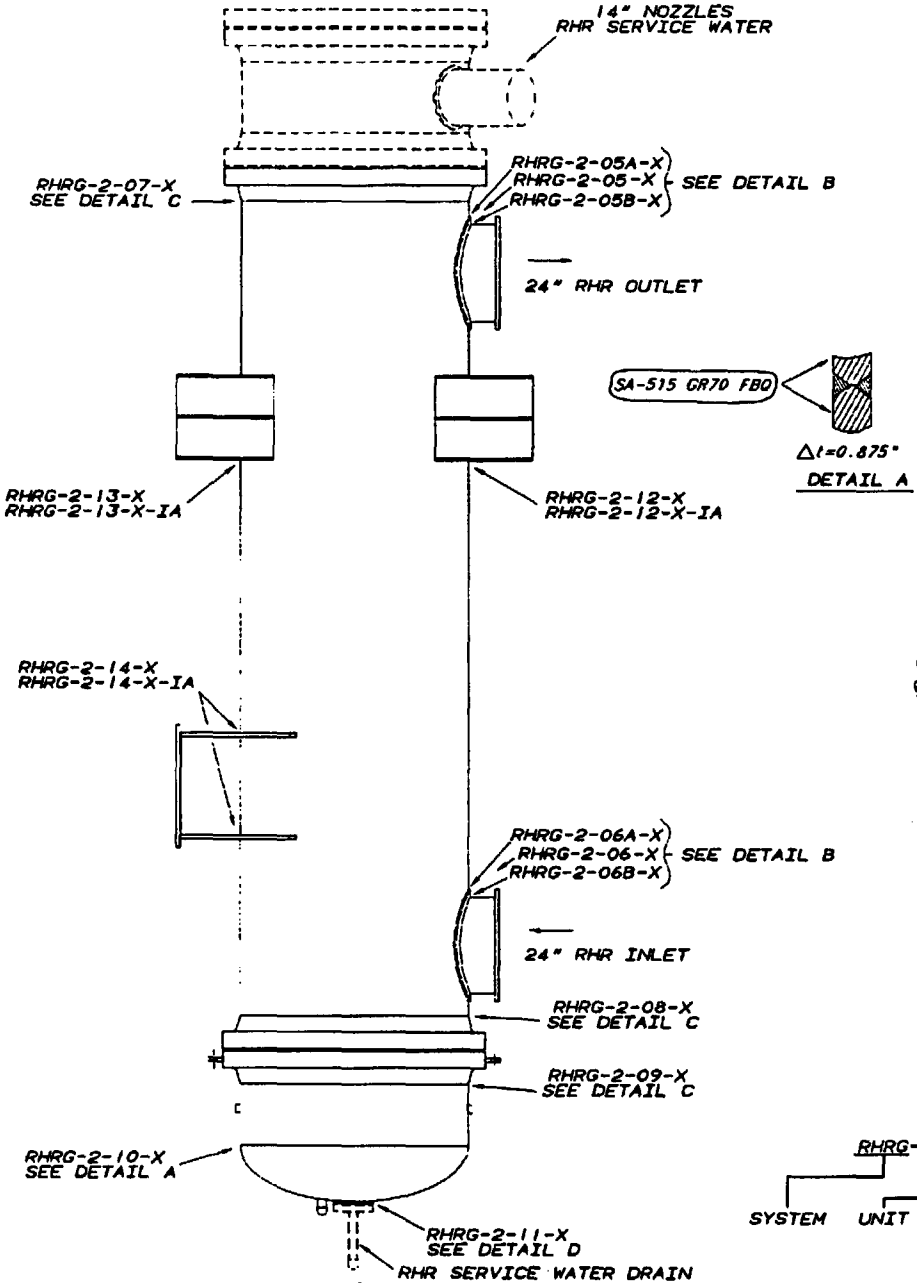

DETAIL A

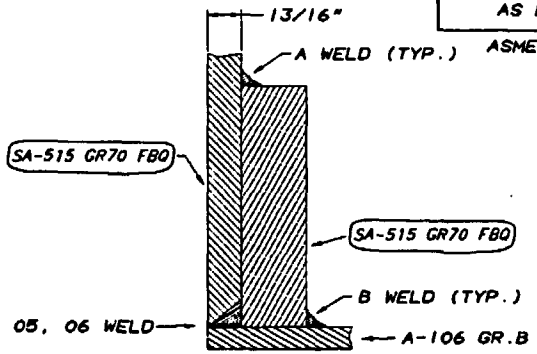

DETAIL B

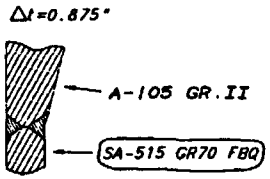

DETAIL C

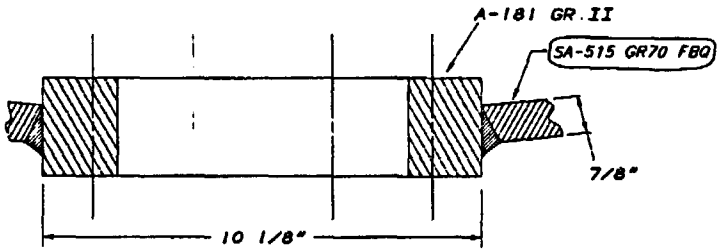

DETAIL D

RHRG-2-__-X

SYSTEM | UNIT | WELD NO. | HEAT EXCHANGER LETTER (A,B,C,OR D)

REV	CHANGE REF	PREPARER	CHECKER	APPROVED	DATE
001	ADMIN	RGP	JT	RLG/H	

REVISED FOR RIMS MEMO R21 990604 007. REMOVED DRAWING CLASSIFICATION (ADMINISTRATIVE REVISION)

TENNESSEE VALLEY AUTHORITY

BROWNS FERRY NUCLEAR PLANT
UNIT 2
RESIDUAL HEAT REMOVAL HEAT EXCHANGER
WELD LOCATIONS

DRAWN: PHB	DATE 3-13-92	SCALE: NTS	CADAM/ASCOP
CHECKED: RPG	APPROVED: GLB	SHEET 01 OF 01	REV
SUBMITTED: JES		2-ISI-0406-C	001
		CCD	

PCADAM

ALL A/D HISTORY RESEARCHED AT R000

REFERENCE DRAWINGS
2F-1177 BYRON JACKSON DIV. BORG-WARNER
1E-3429 BYRON JACKSON DIV. BORG-WARNER
153F754 GENERAL ELECTRIC

ASME CC-1 (EQUIVALENT)

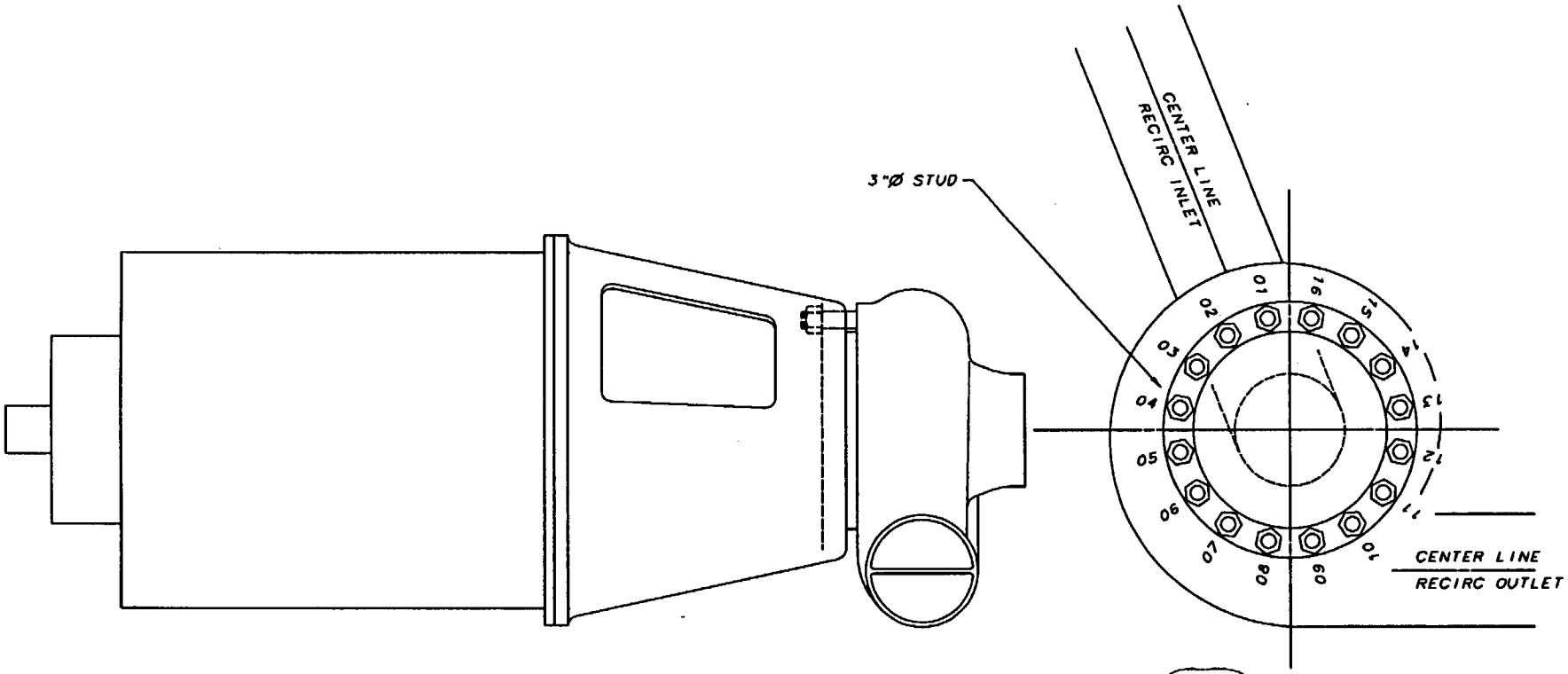

NOTE:
1. MATERIAL ASTM A540 GR B23.

PUMP A	PUMP B
NUMBERS (01-16) ARE PREFIXED BY:	NUMBERS (01-16) ARE PREFIXED BY:
PUMP A.....PMP-A-STUD-2-	PUMP B.....PMP-B-STUD-2-
PUMP A.....PMP-A-NUT-2-	PUMP B.....PMP-B-NUT-2-
PUMP A.....PMP-A-WASH-2-	PUMP B.....PMP-B-WASH-2-
PUMP A.....PMP-A-FLG-2-	PUMP B.....PMP-B-FLG-2-

PUMP A	PUMP B
PUMP INTERIOR IDENTIFIERS:	PUMP INTERIOR IDENTIFIERS:
PUMP A.....PMP-2A-INTERIOR	PUMP B.....PMP-2B-INTERIOR

REV. NO.	CHANGE REF	DATE	DF 10	CHKR	DSGN	RVWR	1 APPD	2 APPD	3 APPD	1 ISSD
000	CCD ASBUILT			RBL		N/A		N/A	N/A	
	ISSUED TO CREATE CCD SUPERSEDES AS-DESIGNED 1IN-0407-C-1 01 AND TO DEPICT AS CONSTRUCTED STATUS PER SHUB MEMO 814 STORES 207; A/N 00									

S TENNESSEE VALLEY AUTHORITY

BROWNS FERRY NUCLEAR PLANT
UNIT 2
RECIRCULATION PUMP
BOLTING LOCATIONS & PUMP INTERIORS

DRAWN: PHB	SUBMITTED	APPROVED	SCALE NTS
DATE: 3-13-92	DATE:	DATE:	SHEET 01 OF 01 SHEET(S)
CHECKED: BFC	JES	GPB	DRAWING NO. 2-1S1-0407-C REV. 000
DATE:			

CCD

PCADAM

ALL A/D HISTORY RESEARCHED AT R000

REFERENCE DRAWINGS
B&W 122876
B&W 122877
NOTE: THIS DRAWING SUPERSEDES ISI-0294-A SH 1

MATERIAL SPECIFICATIONS

CLOSURE HEAD DOME/SEGMENTS
CS MN/MO

N-7
NOZZLE - A508 CL.2 (MN-MO)
LONG WELD NECK - SA-105 GR.II CS

N6A,N6B
NOZZLE - A508 CL.2 (MN-MO)
LONG WELD NECK - SA-105 GR.II CS

ASME CC-1 (EQUIVALENT)

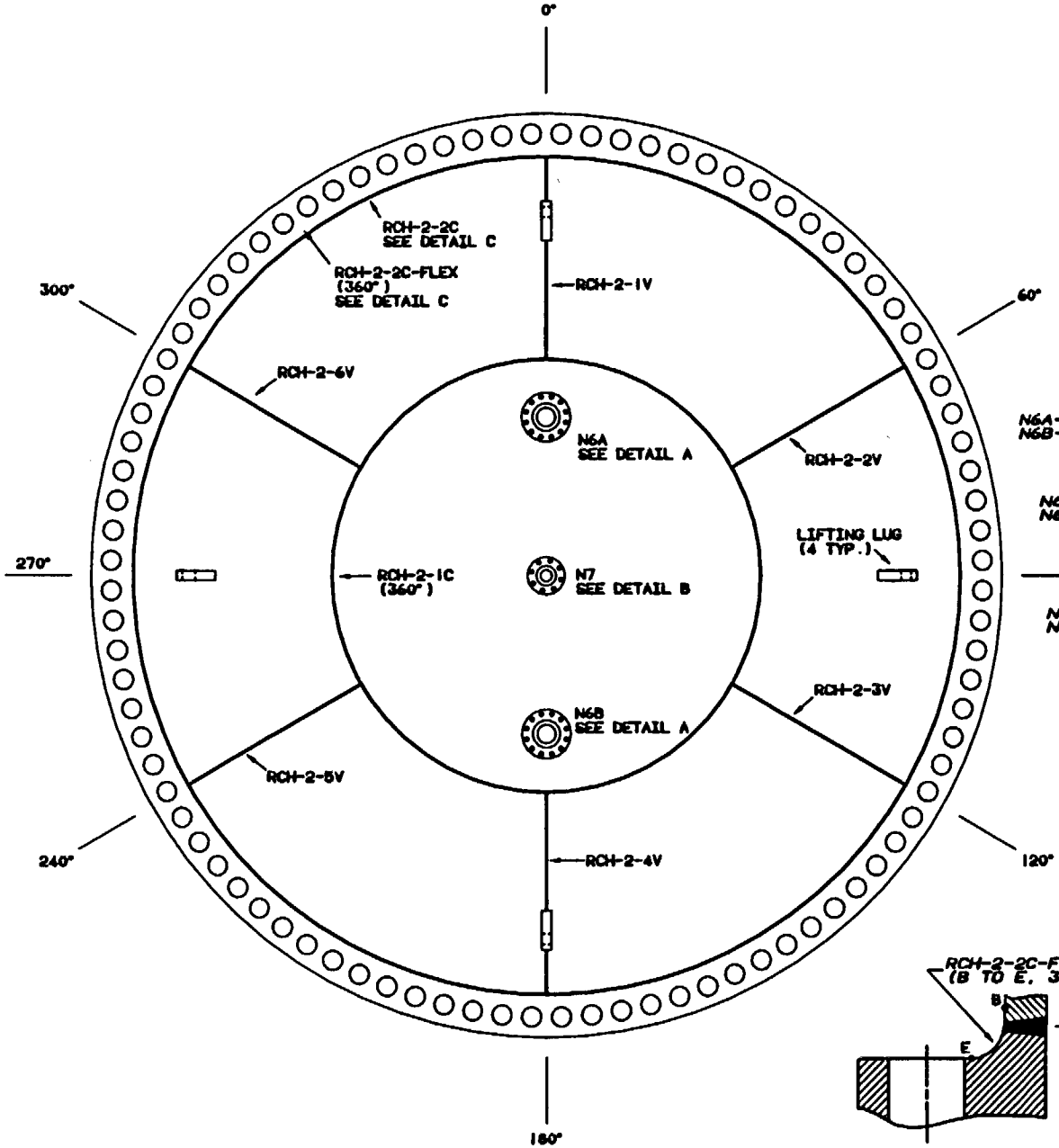

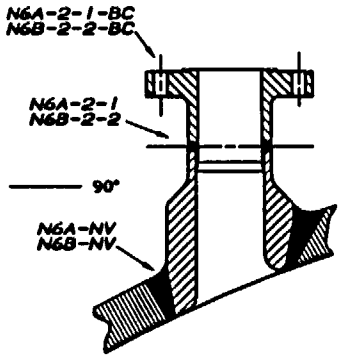

DETAIL A

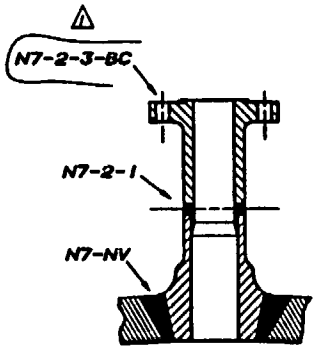

DETAIL B

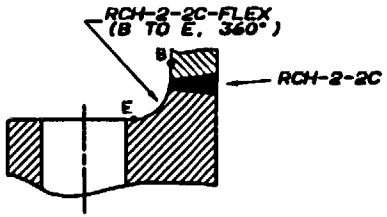

DETAIL C

REV.	BY	CHECKED	SUBMITTED	APPROVED	DATE
1	PHB	[illegible]	[illegible]	[illegible]	6-1-92
REVISE NOZZLE N7 BOLTED CONNECTION ID					

HARDWARE: IBM 3083 SOFTWARE: CADAM USER: ISICHP

TENNESSEE VALLEY AUTHORITY

BROWNS FERRY NUCLEAR PLANT
UNIT 2
CLOSURE HEAD ASSEMBLY
WELD LOCTIONS

DRAWN: PHB	SUBMITTED	APPROVED	SCALE NTS
DATE: 3-13-92	DATE 3-13-92	DATE 3-13-92	SHEET 01 OF 01 SHEET(S)
CHECKED: [illegible]	[illegible]	[illegible]	DRAWING NO. ISI-0408-C REV 01
DATE:			

REFERENCE DRAWINGS
0-112D3838 GE (84P64-B835271)
769E957 GE (84P64-B835271)
CHM-2046-C (NOZZLE LOCATIONS)

NOTE:
THIS DRAWING SUPERSEDES
1SI-0156-A

MATERIAL SPECIFICATIONS
DISSIMILAR METAL WELD

ASME CC-1 (EQUIVALENT)

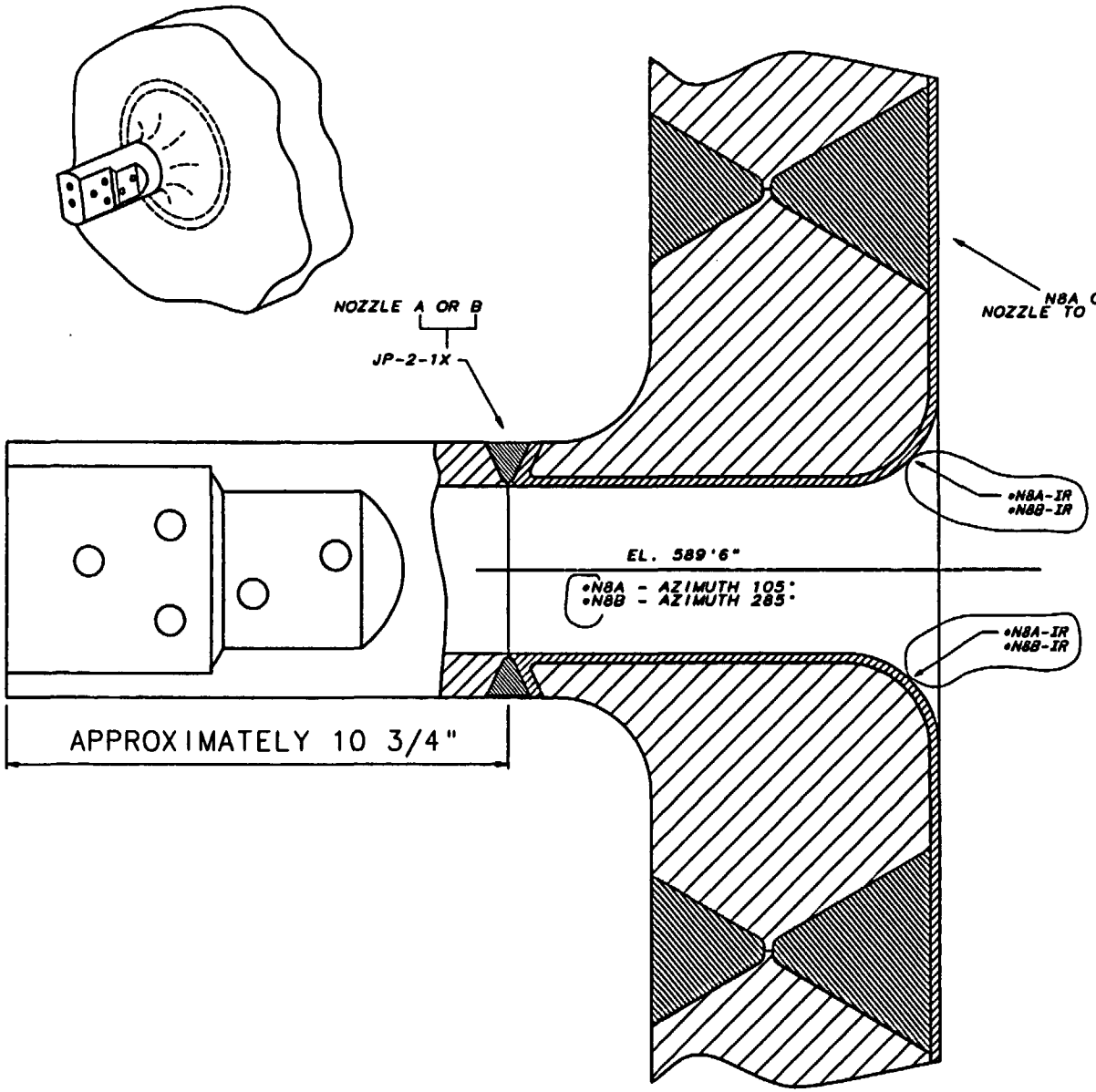

ORIGINAL

CCD	ISSUED TO CREATE CCD NUMBERS AS-DESIGNED 1SI-0410-C-1 R3 AND TO REPLACE AS CONSTRUCTED DRAWING 769E957 SHEET 1 REV 14 (ORIGINAL DRW; A/D 88-401)									
REV NO	CHANGE REF	DATE	DFTR	CHKR	DSGN	RVWR	1 APPR	2 APPR	3 APPR	ISSD
S	TENNESSEE VALLEY AUTHORITY									
	BROWNS FERRY NUCLEAR PLANT UNIT 2 JET PUMP INSTRUMENTATION NOZZLE WELD LOCATIONS									
DRAWN: PHB	DATE: 3-13-93	SCALE: NTS	CADAM/IS/CMP							
CHECKED: RPG	APPROVED: GLB	SHEET 01 OF 01	REV							
SUBMITTED: JEB		2-1SI-0410-C	000							
		CCD								

PCADAM

ALL A/D HISTORY RESEARCHED AT R000

REFERENCE DRAWINGS
OPL171.002 FIG. 4
131850E

ASME CC-1 (EQUIVALENT)

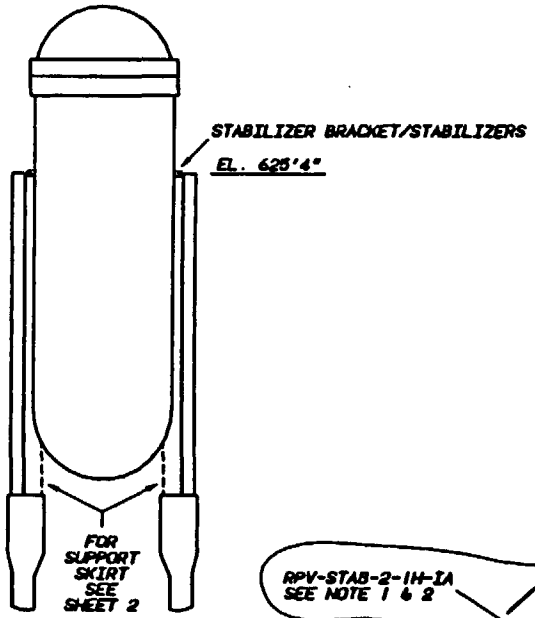

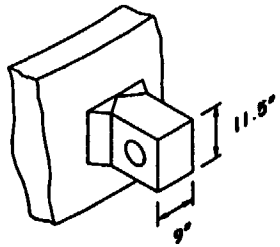

DETAIL A

NOTE:

1. THE RPV STABILIZER IS CONSIDERED ONE SUPPORT (RPV-STAB-2-1) FOR PURPOSES OF ISI SCHEDULING.
2. LETTERS A THROUGH H ARE ASSIGNED FOR INTEGRAL ATTACHMENT EXAMINATION RECORD PURPOSES ONLY.

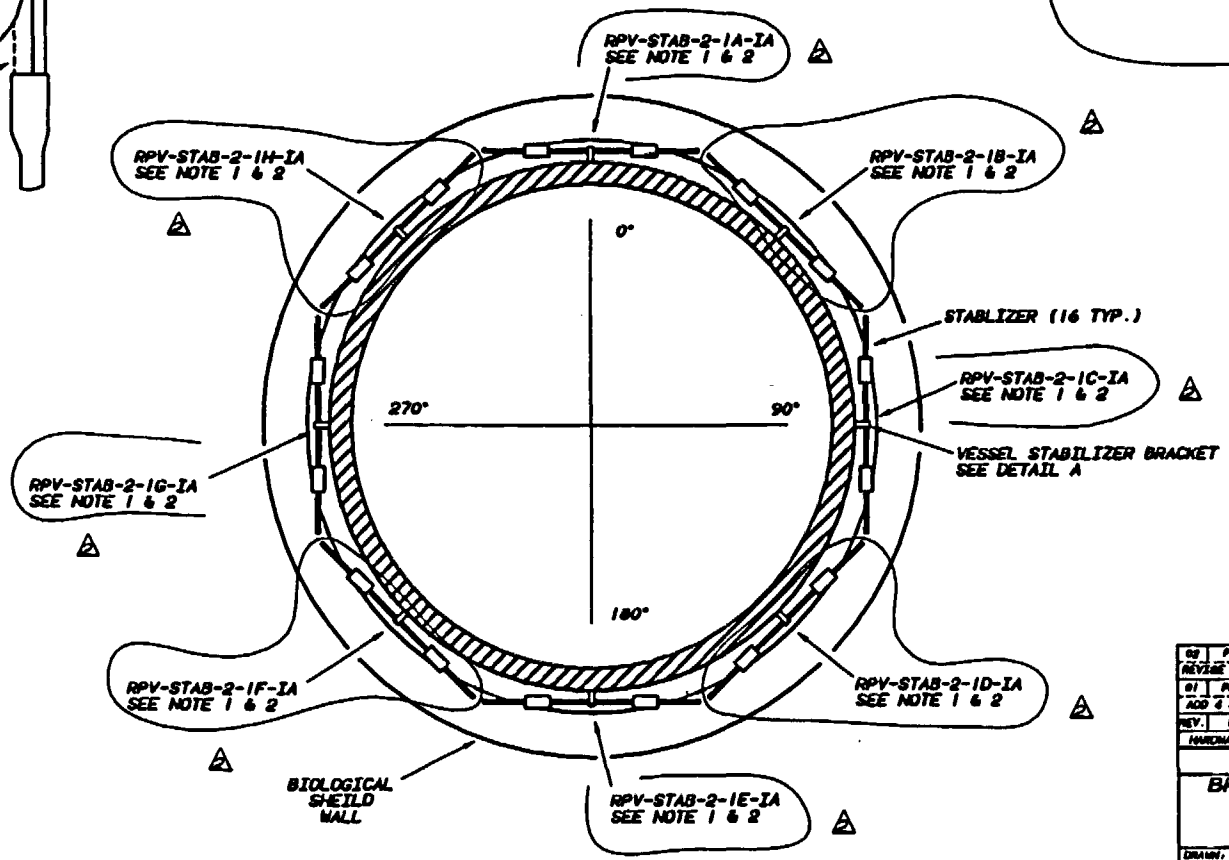

02	PHB	KWD		RWC	02/17/93
REVISE SUPPORT NUMBERS, REVISE NOTE SPECIFYING ALL ONE SUPPORT					
01	PHB	JCS	GLB	RWC	8-11-93
ADD 4 STABILIZERS, CHANGE STAB. NUMBERING, REV. NOTATION					
REV.	BY	CHECKED	SUBMITTED	APPROVED	DATE
HARDWARE: IBM 8083		SOFTWARE: CADAM		USER: ISICHP	

TENNESSEE VALLEY AUTHORITY

BROWNS FERRY NUCLEAR PLANT
UNIT 2
REACTOR VESSEL
VESSEL SUPPORTS

DRAWN: PHB	SUBMITTED	APPROVED	SCALE: NTS
DATE:	DATE:	DATE: 8-2-93	SHEET 1 OF 2 SHEET(S)
CHECKED: RPB	JCS	GLB	DRAWING NO. TSI-0416-C02 REV.
DATE:			

NOZZLE GROUP	DISTANCE TO MATING SURFACE
N3X	86.5"
N12X	146"
N11X	228"
N4X	246.5"
N5X	259.5"
N9	296.5"
N16X	379"
N2X	564"
N1X	583.5"
N8X	610"

REFERENCE DRAWINGS (GE)

SKETCHES - RPV EXAMINATION PLAN (GE)

SK-B2001 SK-B2005 SK-B2010
SK-B2003 SK-B2007
SK-B2004 SK-B2006

LEGEND

O VESSEL NOZZLE
◌ FULL PENETRATION NOZZLE WELD

ASME CC-1 (EQUIVALENT)

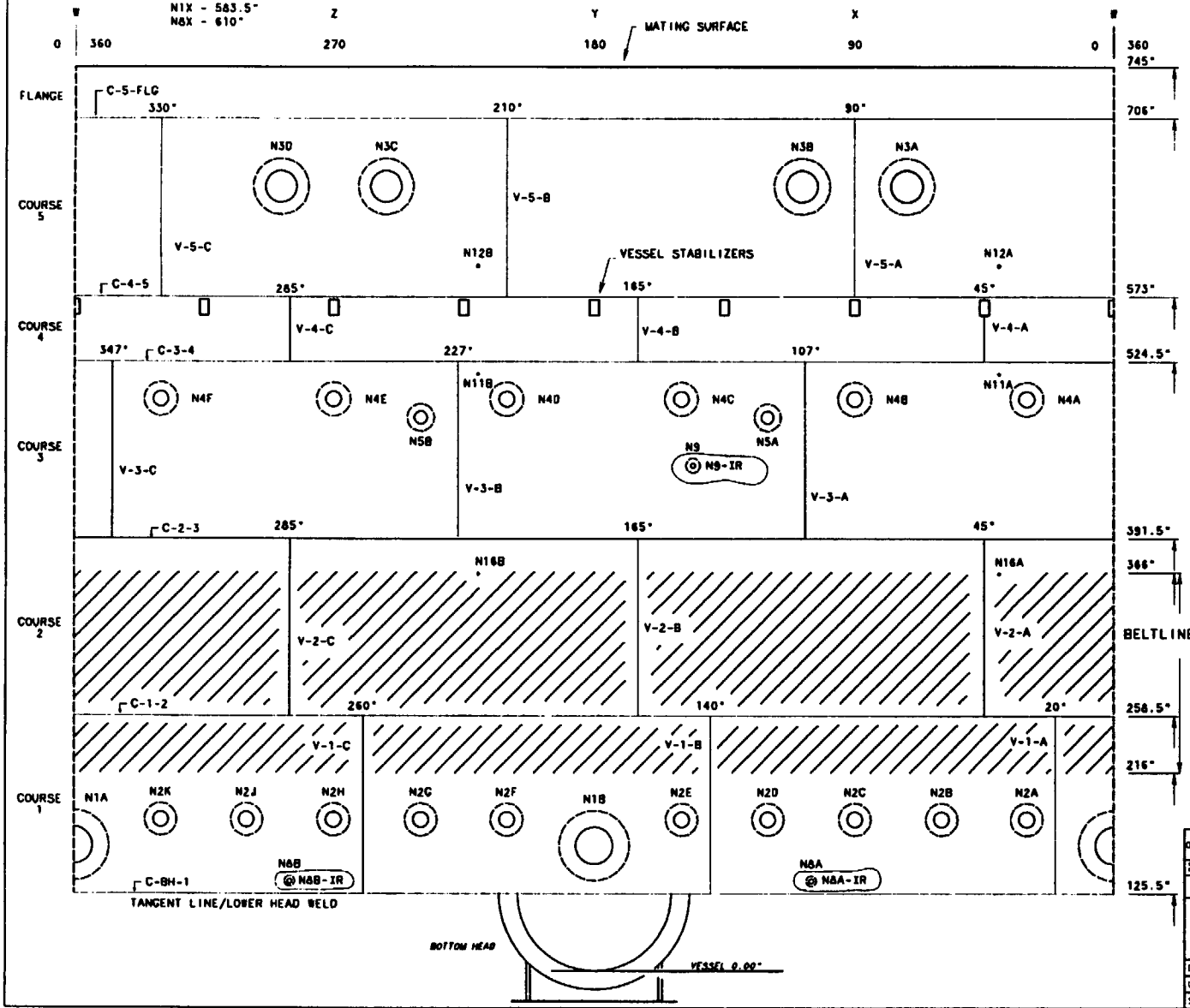

NOTES:
1. REFER TO RPV MANUAL FOR MATERIAL SPECIFICATION AND MATERIAL THICKNESS.
2. NOZZLES N-11A, N-11B, N-12A, N-12B, N-16A, AND N-16B ARE CATEGORY B-E.

002	ADMIN			RDL		N/A		N/A	N/A	
	REVISED PER RIMS MEMO R14 970505 302									
REV NO	CHANGE REF	DATE	DFTR	CHKR	DSGN	RVWR	APPD	APPD	APPD	ISSD

TENNESSEE VALLEY AUTHORITY

S

BROWNS FERRY NUCLEAR PLANT
UNIT 2
REACTOR PRESSURE VESSEL (RPV)
SHELL COURSE WELD/NOZZLE LOCATIONS (OUTSIDE VIEW)

DRAWN: N/A	DATE: N/A	SCALE: NTS	CADAM/ISICMP
CHECKED: N/A	APPROVED: GLB	SHEET 01 OF 02	REV
SUBMITTED: N/A		2-CHM-2046-C	002
		CCD	

CADAM

ALL A/D HISTORY RESEARCHED AT R000

REFERENCE DRAWINGS
500733-001C (MIRROR INSULATION)
24187-F (B&W)
122856E

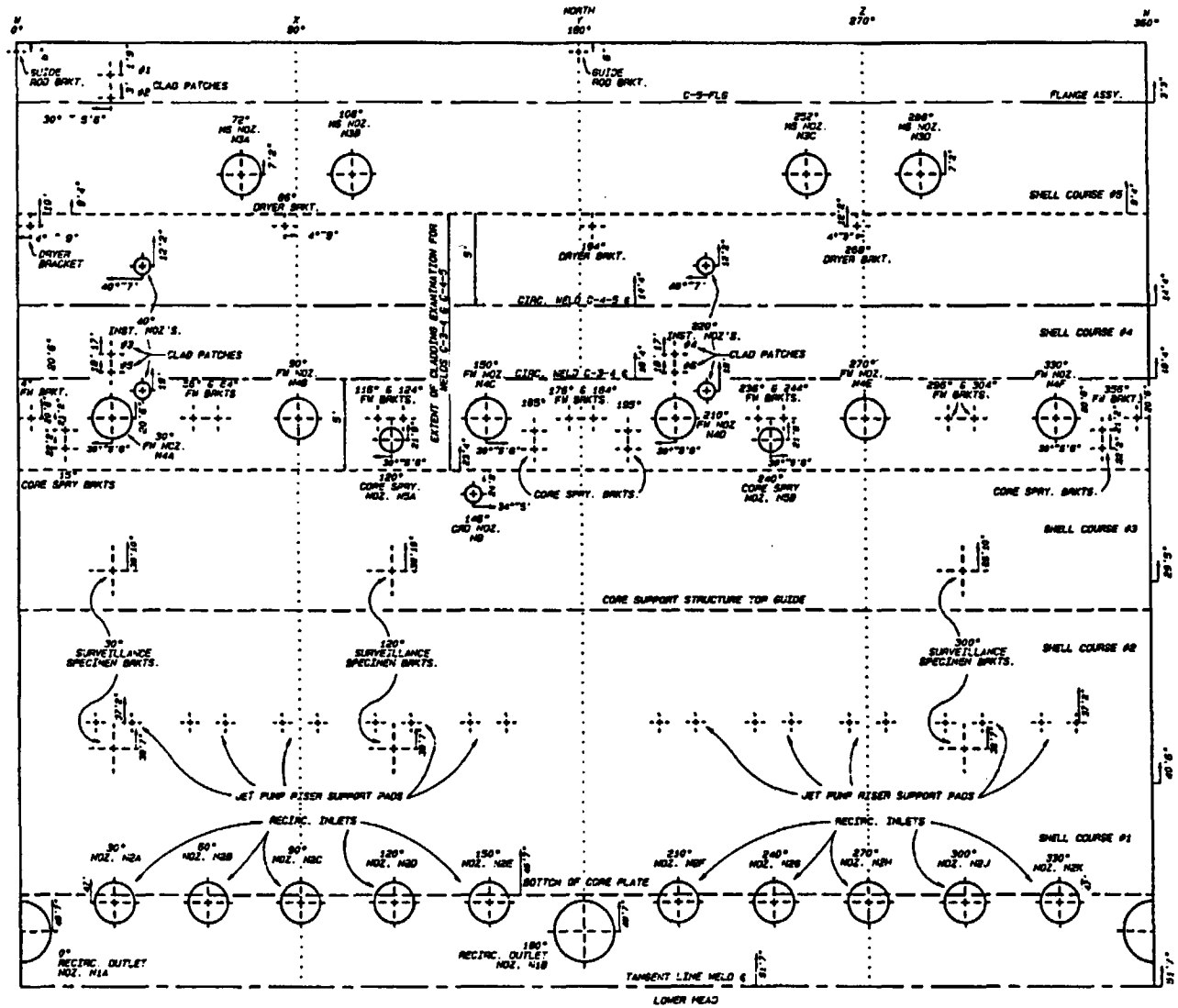

NOTES:

1. FOUR (4) STEAM DRYER HOLDDOWN BRACKETS (NOT SHOWN) ARE LOCATED IN THE VESSEL CLOSURE HEAD 10" UP FROM THE FLANGE. THESE ARE AT AZIMUTH LOCATIONS 41°, 139°, 221°, AND 319°.
2. CODE CATEGORY B-N-1 RPV INTERIOR
   CODE CATEGORY B-N-2
   RPV-INT ATT BLR ①
   RPV-INT ATT NBLR ②
   RPV-CORE SUPPORT
   ① INTEGRAL ATTACHMENT BELTLINE REGION
   ② INTEGRAL ATTACHMENT NON BELTLINE REGION

000	CCO ADMIN			RDA		N/A		N/A	N/A		
	ISSUED TO CREATE CCO SUPERSEDES AS-DESIGNED CHM 2046-C-2 R2 AND TO DEPICT AS CONSTRUCTED STATUS PER RIMS MEMO 814 970303 301; A/D RO:81										
REV NO.	CHANGE REF	DATE	DFTR	CHKR	DSGN	RVWR	APPD	APPD	APPD	ISSD	

S TENNESSEE VALLEY AUTHORITY

BROWNS FERRY NUCLEAR PLANT
UNIT 2
REACTOR VESSEL WELD AND NOZZLE LOCATIONS (INTERIOR WALL)

DRAWN: PHB	SUBMITTED	APPROVED	SCALE: NTS
DATE: 9-26-68	DATE: 5-23-88	DATE: 5-23-88	SHEET 02 OF 02 SHEET(S)
CHECKED: JES	EDC	GLB	DRAWING NO. 2-CHM-2046-C REV 000
DATE: 5-23-88			

CCO

PCADAM

ALL A/D HISTORY RESEARCHED AT RDOO

7117
R21

OWNER: TENNESSEE VALLEY AUTHORITY OFFICE OF NUCLEAR POWER 1101 MARKET STREET CHATTANOOGA, TENNESSEE 37402	PLANT: BROWNS FERRY NUCLEAR PLANT P.O. BOX 2000 DECATUR, ALABAMA 35602
UNIT: TWO	CERTIFICATE OF AUTHORIZATION: NOT REQUIRED.
COMMERCIAL SERVICE DATE: MARCH 1, 1975	
NATIONAL BOARD NUMBER FOR UNIT: NOT REQUIRED.	

APPENDIX VI

SUMMARY OF INDICATIONS

OWNER: TENNESSEE VALLEY AUTHORITY OFFICE OF NUCLEAR POWER 1101 MARKET STREET CHATTANOOGA, TENNESSEE 37402	PLANT: BROWNS FERRY NUCLEAR PLANT P.O. BOX 2000 DECATUR, ALABAMA 35602
UNIT: TWO	CERTIFICATE OF AUTHORIZATION: NOT REQUIRED.
COMMERCIAL SERVICE DATE: MARCH 1, 1975	
NATIONAL BOARD NUMBER FOR UNIT: NOT REQUIRED.	

Summary of Indications

Indications detected during the performance of examinations for Browns Ferry Nuclear Plant Unit 2/Cycle12 were evaluated in accordance with approved written procedures. Generally, examination results yielded either No Recordable Indications (NRI) or Recordable Indications.

Recordable Indications were evaluated to determine their origin. Indications determined to be of a geometric, metallurgical, or similar origin were typically dispositioned as non-relevant. Indications determined to be of a non-geometric, non-metallurgical, or similar origin were typically dispositioned as relevant. Such indications required additional measures such as further evaluation in accordance with ASME Section XI acceptance standards, engineering analysis, repair, or replacement.

The following is a summary indications detected and corrective measures taken during the Unit 2 Cycle 12 refueling Outage.

NOI No.	Code Cat.	Component Identifier	Indication Description	Resolution	Additional samples
U2C12-001	F-A	HPAS-2-H-02	BENT ROD	USE AS IS	NONE
U2C12-002	B-M-2	VALVE 2-FCV-074-47	CRACK IN VALVE DISC SEAT (ONE SIDE)	REPLACED VALVE DISC	NONE
U2C12-003	E-A	DW-LNR-2-1A	PITTING	ACCEPTABLE	NONE
U2C12-005	B-G-2	VALVE PCV-1-2-022	DEFORMED /MISSING THREADS ON BOLTING	REPLACE	NONE
U2C12-006	B-G-2	VALVE PCV-1-2-022	DAMAGED THREADS ON BOLTING	REPLACE	NONE
U2C12-007	E1.12	2-X-2, DW HD 2-1, DW LNR 2-1, DW LNR 2-2, DW LNR 2-3, DW LNR 2-4, DW LNR 2-5, DW LNR 2-6	STEEL CONTAINMENT VESSEL COATINGS (INSIDE DRYWELL)	REMOVED DELAMINATED COATINGS AND A VT-3 VISUAL EXAMINATION PERFORMED, RESULTS SATIFACTORY	NONE

ADDITIONAL SAMPLES

There were no additional samples required this outage.

OWNER: TENNESSEE VALLEY AUTHORITY OFFICE OF NUCLEAR POWER 1101 MARKET STREET CHATTANOOGA, TENNESSEE 37402	PLANT: BROWNS FERRY NUCLEAR PLANT P.O. BOX 2000 DECATUR, ALABAMA 35602
UNIT: TWO	CERTIFICATE OF AUTHORIZATION: NOT REQUIRED.
COMMERCIAL SERVICE DATE: MARCH 1, 1975	
NATIONAL BOARD NUMBER FOR UNIT: NOT REQUIRED.	

ATTACHMENT 1

UNIT 2 CYCLE 12
AUGMENTED EXAMINATION
SUMMARY

OWNER: TENNESSEE VALLEY AUTHORITY OFFICE OF NUCLEAR POWER 1101 MARKET STREET CHATTANOOGA, TENNESSEE 37402	PLANT: BROWNS FERRY NUCLEAR PLANT P.O. BOX 2000 DECATUR, ALABAMA 35602
UNIT: TWO	CERTIFICATE OF AUTHORIZATION: NOT REQUIRED.
COMMERCIAL SERVICE DATE: MARCH 1, 1975	
NATIONAL BOARD NUMBER FOR UNIT: NOT REQUIRED.	

SECTION 1

AUGMENTED SUMMARY

OWNER: TENNESSEE VALLEY AUTHORITY OFFICE OF NUCLEAR POWER 1101 MARKET STREET CHATTANOOGA, TENNESSEE 37402	PLANT: BROWNS FERRY NUCLEAR PLANT P.O. BOX 2000 DECATUR, ALABAMA 35602
UNIT: TWO	CERTIFICATE OF AUTHORIZATION: NOT REQUIRED.
COMMERCIAL SERVICE DATE: MARCH 1, 1975	
NATIONAL BOARD NUMBER FOR UNIT: NOT REQUIRED.	

This section includes augmented examinations performed to comply with NRC or TVA self-imposed requirements. Typical sources include generic letters, IE Bulletins, technical specifications, vendor recommendations, and industry experience. The following summarizes the augmented examinations performed during the Unit 2 Cycle 12 outage and references the corresponding paragraph in 2-SI-4.6.G and/or 0-TI-365.

Paragraph 7.11.5 Augmented Examination of Austenitic Stainless Steel and Dissimilar Metal Welds Susceptible to IGSCC (BWRVIP-75)

Austenitic stainless steel and dissimilar metal circumferential welds in piping four inches or larger in nominal pipe diameter which contain reactor coolant at temperatures above 200 degrees F during power operation shall be examined. There was no new IGSCC identified in Cycle 12.

Reference: *BWR Vessel and Internals Project, Technical Basis for Revisions to Generic Letter 88-01 Inspection Schedules, BWRVIP-75.*

NUREG-0313 CATEGORY	TOTAL NUMBER OF WELDS	WELDS EXAMINED DURING U2/C12 Outage
A	47	*0
B	N/A	N/A
C	115	9
D	7	0
E	15	0
F	N/A	N/A
G	2	2 (VT-2)

*Category A Welds are sampled in accordance with the Unit 2 Risk - Informed ISI Program.

Examination Results: No indications of IGSCC cracking observed.

OWNER: TENNESSEE VALLEY AUTHORITY OFFICE OF NUCLEAR POWER 1101 MARKET STREET CHATTANOOGA, TENNESSEE 37402	PLANT: BROWNS FERRY NUCLEAR PLANT P.O. BOX 2000 DECATUR, ALABAMA 35602
UNIT: TWO	CERTIFICATE OF AUTHORIZATION: NOT REQUIRED.
COMMERCIAL SERVICE DATE: MARCH 1, 1975	
NATIONAL BOARD NUMBER FOR UNIT: NOT REQUIRED.	

Paragraph 7.11.6 Weld inspection For Pipe Whip Protection

Additional examinations shall be performed each inspection interval on selected circumferential pipe welds to provide additional protection against pipe whip in accordance with TSR 3.4.3.2.

The following welds were ultrasonically examined during the Unit 2 Cycle 12 Refueling Outage to locate evidence of pipe whip:

TCS-2-407	REPORT # R-126
GFW-2-15	REPORT # R-100
KFW-2-38	REPORT # R-094
KFW-2-39	REPORT # R-101
THPCI-2-072	REPORT 3 R-123
GMS-2-24	REPORT # R-076
GMS-2-32	REPORT # R-088
DSRHR-2-07	REPORT # R-111
DSRWCU-2-06	REPORT # R-109

Examination results: The examinations were acceptable.

Paragraph 7.11.7 Reactor Pressure Vessel Interior

Augmented examinations of the RPV interior components are performed in accordance with 0-TI-365, Revision 010, Reactor Pressure Vessel Internals Inspection (RPVII) Units 1, 2 and 3. Reference ISI Report # R-169,

Core Spray Piping, T-Box's and Sparger Inspection's Visual (VT-1 and EVT-1) Examinations
Total: 52

Welds: CS-P1-120, CS-P2-120, CS-AP3-118, CS-BP3-122, CS-P1-240, CS-P2-240, CS-CP3-238, CS-DP3-242, AS1, BS1, CS1, DS1, AS2L, AS2R, BS2L, BS2R, CS2L, CS2R, DS2L, DS2R, AS3a, BS3a, CS3a, DS3a, AS3b, BS3b, CS3b, DS3b, BS3c-1, BS3c-2, DS3c-1, DS3c-2, AS4-1, AS4-2, BS4-1, BS4-2,CS4-1, CS4-2, DS4-1, DS4-2, SB-7°, SB-45°, SB-88°, SB-93°, SB-135°, SB-172°, SB-187°, SB-225°, SB-267°, SB-273°, SB-315°, and SB-352°.

Reference: 0-TI-365, Paragraph 7.6 and 7.11.2 and Appendix 9.2 and BWRVIP-18, BWR Core Spray Internals Inspection and Flaw Evaluation Guidelines, EPRI TR-106740

Examination Results: No indications of IGSCC cracking observed.

OWNER: TENNESSEE VALLEY AUTHORITY OFFICE OF NUCLEAR POWER 1101 MARKET STREET CHATTANOOGA, TENNESSEE 37402	PLANT: BROWNS FERRY NUCLEAR PLANT P.O. BOX 2000 DECATUR, ALABAMA 35602
UNIT: TWO	CERTIFICATE OF AUTHORIZATION: NOT REQUIRED.
COMMERCIAL SERVICE DATE: MARCH 1, 1975	
NATIONAL BOARD NUMBER FOR UNIT: NOT REQUIRED.	

Core Plate Plugs and Hold Down Bolts Visual (VT-3) Examinations: Total = 51

36 - Hold Down Bolts, CPHDB L-10, 0 TO 90 Degrees, CPHDB L-10, 90 to 180 Degrees, CPHDB L-10, 180 to 270 Degrees, and CPHDB l-10, 270 to 360 Degress.

15 - Core Plate Plugs at location # 13 - 30-27, 30-19, 30-11, 26-23, 26-39, 22-35, 22-27, 18-31, 34-23, 46-35, 42-31, 38-27, 38-35, 34-39, and 30-35

Reference: 0-TI-365, Paragraph 7.14 and Appendix 9.2 and BWRVIP-25, BWR Core Plate Inspection and Flaw Evaluation Guidelines, EPRI TR-107284.

Examination Results: No Recordable Indications noted.

Top Guide Visual (VT-1 and EVT-1) Examinations: Total = 7

Alignment Pins, Location 2/3 at Azimuth 0 and 90 Degrees
Rim Welds, Location 11 at Azimuth 0, 90, 180, and 270 Degrees
Socket/Bosses to Rim Welds, location 3 at Azimuth 0 and 90 Degrees
Debris Inspection of Top Guide Area, Periphery
Debris Inspection of Top Guide Area, General

Reference: 0-TI-365, Paragraph 7.9 and Appendix 9.2 and BWRVIP-26, BWR Top Guide Inspection and Flaw Evaluation Guidelines, EPRI TR-107285.

Examination Results: No indications of IGSCC cracking observed.

Steam Dryer Visual (EVT-1) Examination: Total = 2

Man Hole Covers: 90 Degree Side and 270 degree Side.

Reference: 0-TI-365, Reactor Pressure Vessel Internals Inspection (RPVII) Units 1, 2 and 3.

Examination Results: No Recordable Indications noted.

Feedwater Spargers Visual (VT-1) Examinations: Total = 18

FW Nozzle Inner Radius, Sparger Nozzles, Sparger End Brackets, on N4A, N4B, N4C, N4D, N4E, and N4F.

Reference: 0-TI-365, Paragraph 7.17 and Appendix 9.2 and NUREG-0619 and BWR Owners Group(BWROG) Licensing Topical Report GE-NE-523-A71-0594, Revision 01, August 1999, Table 6-1.

Examination Results: No Recordable Indications noted.

OWNER: TENNESSEE VALLEY AUTHORITY OFFICE OF NUCLEAR POWER 1101 MARKET STREET CHATTANOOGA, TENNESSEE 37402	PLANT: BROWNS FERRY NUCLEAR PLANT P.O. BOX 2000 DECATUR, ALABAMA 35602
UNIT: TWO	CERTIFICATE OF AUTHORIZATION: NOT REQUIRED.
COMMERCIAL SERVICE DATE: MARCH 1, 1975	
NATIONAL BOARD NUMBER FOR UNIT: NOT REQUIRED.	

Jet Pump Assemblies and Riser Braces, Visual Inspections (VT-3, VT-1, and EVT-1) Examinations: Total = 134*

JP-13/14	**JP-3/4**	JP/11 Set Screw VS	JP/15 Set Screw SH	JP-17 MX-2	JP-20 DF-1
J-RS-1	B-RS-1	JP/12 Set Screw SH	JP/15 Set Screw VS	JP-17 DF-1	**JP-20 WD-1***
RB 1a	B-RS-8	JP/12 Set Screw VS	JP/16 Set Screw SH	**JP-17 WD-1***	JP/19 Set Screw SH
RB 1b	B-RS-9	JP/11 BB1-2	JP/16 Set Screw VS	JP-18-IN-4	JP/19 Set Screw VS
RB 1c	RB 1a	JP/12 BB1-2	JP/15 BB1-2	JP-18 MX-2	JP/20 Set Screw SH
RB 1d	RB 1b	J-RS-6	JP/16 BB1-2	JP-18 DF-1	JP/20 Set Screw VS
JP-13-WD-1	RB 1c	J-RS-7	G-RS-6	JP-18 WD-1	JP/19 BB1-2
JP-14-WD-1	RB 1d	J-RS-8	G-RS-7	JP/17 Set Screw SH	JP/20 BB1-2
JP-17/18	JP-4-WD-1	J-RS-9	G-RS-8	JP/17 Set Screw VS	JP-1 WD-1
G-RS-1	JP/ 4 Set Screw SH	JP-13-IN-4	G-RS-9	JP/18 Set Screw SH	JP-2 WD-1
RB 1a	JP/ 4 Set Screw VS	JP-13 MX-2	**JP-13 WD-1***	JP/18 Set Screw VS	JP-3 WD-1
RB 1b	K-RS-6	JP-13 DF-1	JP-14-IN-4	JP/17 BB1-2	**JP-4 WD-1***
RB 1c	K-RS-7	H-RS-7	JP-14 MX-2	JP/18 BB1-2	JP-5 WD-1
RB 1d	K-RS-8	H-RS-8	JP-14 DF-1	F-RS-6	JP-6 WD-1
JP-17-WD-1	K-RS-9	H-RS-9	**JP-14 WD-1***	F-RS-7	JP-7 WD-1
JP-19/20	JP-11 MX-2	JP-15-IN-4	JP/13 Set Screw SH	F-RS-8	JP-8 WD-1
F-RS-1	JP-11 IN-4	JP-15 MX-2	JP/13 Set Screw VS	F-RS-9	JP-9 WD-1
RB 1a	JP-11 DF-1	JP-15 DF-1	JP/14 Set Screw SH	JP-19-IN-4	JP-10 WD-1
RB 1b	JP-11 WD-1	JP-15 WD-1	JP/14 Set Screw VS	JP-19 MX-2	
RB 1c	JP-12-IN-4	JP-16-IN-4	JP/13 BB1-2	JP-19 DF-1	
RB 1d	JP-12 MX-2	JP-16 MX-2	JP/14 BB1-2	JP-19 WD-1	
JP-20-WD-1	JP-12 DF-1	JP-16-DF-1	H-RS-6	JP-20-IN-4	
JP/11 Set Screw SH	JP-12 WD-1	JP-16 WD-1	JP-17- IN-4	JP-20 MX-2	

*** NOTE: Locations JP-4-WD-1, JP-13-WD-1, JP-14-WD-1, JP-17-WD-1, and JP-20-WD-1 are listed twice on the list above of inspections for the Jet Pump assemblies. The second inspection of each location was additional scope recommended by General Electric Nuclear Energy, and was to verify that the back surface of the wedge is in contact with the inlet-mixer belly band only.**

****Also a VT-3 examination performed for an Annulus Debris Inspection of Jet Pumps: 12/13, 13/14, 15/16, 17/18, and 19/20.**

Reference: 0-TI-365, Paragraph 7.8 and Appendix 9.2 and BWRVIP-41, BWR Jet Pump Assembly Inspection and Flaw Evaluation Guidelines, EPRI TR-108728.

Examination Results: Reference next page and ISI Report R-169 for results.

OWNER: TENNESSEE VALLEY AUTHORITY OFFICE OF NUCLEAR POWER 1101 MARKET STREET CHATTANOOGA, TENNESSEE 37402	PLANT: BROWNS FERRY NUCLEAR PLANT P.O. BOX 2000 DECATUR, ALABAMA 35602
UNIT: TWO	CERTIFICATE OF AUTHORIZATION: NOT REQUIRED.
COMMERCIAL SERVICE DATE: MARCH 1, 1975	
NATIONAL BOARD NUMBER FOR UNIT: NOT REQUIRED.	

Jet Pump Assemblies and Riser Braces, Visual Inspections (VT-3, VT-1, and EVT-1) Examination Results.

Jet Pump # 17 shows wear on the wedge assembly between the wedge and restrainer bracket. Recordable Indication.

The IVVI Scope was expanded to inspect the wedge assemblies on the other jet pumps (1-10). Jet pumps # 1, 2, 3, 5, 6, 8, 9, and 10 No Recordable Indications noted. See below on JP # 4 and JP # 7.

Jet Pumps # 4, 13, 14, and 20 also showed signs of wear on the top and bottom of the wedge assembly. Jet Pump # 17 was determined to have the most severe condition.

Jet Pump # 7 indicated very minor signs of wear on the top and bottom of the wedge assembly and was noted for future comparison with Inservice Examinations.

The IVVI Scope was expanded to inspect the riser braces, RS-1, and Wedge assembly contact area between the Jet Pump bellybands and wedge area. (Jet Pumps 4, 13, 14, 17, and 20). No indications were found.

A GE evaluation justifying acceptability of the jet pump wedge assembly condition for a minimum of one cycle has been received from GE, on March 08, 2003. Reference EDMS No. R06 030308 881.

Jet Pump # 16 shows a gap on the Shroud side of the set screw. The set screw was back lighted and has a gap approximately 1/5th thread width (0.025 inches estimated). This condition was added to Problem Evaluation Report # BFN PER 03-004060-000.

OWNER: TENNESSEE VALLEY AUTHORITY OFFICE OF NUCLEAR POWER 1101 MARKET STREET CHATTANOOGA, TENNESSEE 37402	PLANT: BROWNS FERRY NUCLEAR PLANT P.O. BOX 2000 DECATUR, ALABAMA 35602
UNIT: TWO	CERTIFICATE OF AUTHORIZATION: NOT REQUIRED.
COMMERCIAL SERVICE DATE: MARCH 1, 1975	
NATIONAL BOARD NUMBER FOR UNIT: NOT REQUIRED.	

Paragraph 7.11.8 Level Instrumentation Nozzle Safe Ends BWRVIP-49: 6 VT-2 (Visual) Examinations

Perform a VT-2 Visual inspection of the Level Instrumentation safe end to nozzle weld of the N11A-SE, N11B-SE, N12A-SE, N12B-SE, N16-SE, and N16B-SE, nozzles in accordance with the recommendations of BWRVIP-49. The recommendations are to perform a visual leak check of the safe end to nozzle weld during the drywell leak check effort performed each outage. Insulation removal is not necessary to perform the leak check. The implementation interval shall start with the Unit 2 Cycle 12 Refueling Outage. Leakage inspections shall be performed as described during the Cycle 12 outage and during each subsequent refueling outage.

Reference: 0-TI-365, Paragraph 7.12 and BWRVIP-49, "Instrument Penetration Inspection and Flaw *Evaluation Guidelines"*

Examination Results: A VT-2 examination was performed on all six nozzle safe-end welds during the system leakage test and revealed no leakage.

Paragraph 7.11.9 Core Plate delta/P Standby Liquid Control (SLC) Nozzle BWRVIP-27: 1 VT-2 (Visual) Examination

Perform a VT-2 Visual inspection of the Core Plate delta/P Standby Liquid Control (SLC), nozzle to safe end weld and safe end of the N10-SE in accordance with the recommendations of BWRVIP-27. The recommendations are to perform a visual leak check of the safe end to nozzle weld and safe end during the drywell leak check effort performed each outage. Insulation removal is not necessary to perform the leak check. The implementation interval shall start with the Unit 2 Cycle 12 Refueling Outage.

Leakage inspections shall be performed as described during the Cycle 12 outage and during each subsequent refueling outage.

Reference: 0-TI-365, Paragraph 7.16 and Appendix 9.2 and BWRVIP-27, "BWR Standby Liquid Control System/Core Plate delta/P Inspection and Flaw Evaluation Guidelines"

Examination Results: A VT-2 examination was performed on the nozzle to safe-end weld and safe end during the system leakage test and revealed no leakage.

OWNER: TENNESSEE VALLEY AUTHORITY OFFICE OF NUCLEAR POWER 1101 MARKET STREET CHATTANOOGA, TENNESSEE 37402	PLANT: BROWNS FERRY NUCLEAR PLANT P.O. BOX 2000 DECATUR, ALABAMA 35602
UNIT: TWO	CERTIFICATE OF AUTHORIZATION: NOT REQUIRED.
COMMERCIAL SERVICE DATE: MARCH 1, 1975	
NATIONAL BOARD NUMBER FOR UNIT: NOT REQUIRED.	

TVA/Browns Ferry Nuclear Plant, NRC Commitment in FSAR Section 10.10.5: 11 Welds

TVA/BFN to monitor the Unit 2 Emergency Equipment Cooling Water (EECW) System 067, stainless steel butt welds each cycle to ensure structural integrity of the system. Perform radiography in accordance with TVA Nondestructive Examination (NDE) Procedures, of designated welds to monitor for Microbiologically Induced Corrosion (MIC) progress. Reference Work Order # 02-005368-000

Residual Heat Removal (RHR) Room Coolers B & D Welds:

T-EECW-2-BD-13B, T-EECW-2- BD-14B, T-EECW-2-BD-25B, T-EECW-2-BD-27B, T-EECW-2-BD-31B, T-EECW-2-BD-33B, T-EECW-2-BD-36B, and T-EECW-2-BD-37B.

Core Spray (CS) Room Coolers A & C Welds:

T-EECW-2-CAC-06B, T-EECW-2-CAC-07B, and T-EECW-CAC-25B.

Examination Results: No new MIC growth recorded.

OWNER: TENNESSEE VALLEY AUTHORITY OFFICE OF NUCLEAR POWER 1101 MARKET STREET CHATTANOOGA, TENNESSEE 37402	PLANT: BROWNS FERRY NUCLEAR PLANT P.O. BOX 2000 DECATUR, ALABAMA 35602
UNIT: TWO	CERTIFICATE OF AUTHORIZATION: NOT REQUIRED.
COMMERCIAL SERVICE DATE: MARCH 1, 1975	
NATIONAL BOARD NUMBER FOR UNIT: NOT REQUIRED.	

SECTION 2

EXAMINATION SUMMARY

EXAMINATIONS PERFORMED DURING

UNIT 2 CYCLE 12 OUTAGE

EXAM REQUIREMENT
0TI365
B01-02
B02-02
B04-02
B07-02
V01-01

OWNER: TENNESSEE VALLEY AUTHORITY
NUCLEAR POWER GROUP
1101 MARKET STREET
CHATTANOOGA, TENNESSEE 37402

PLANT: BROWNS FERRY NUCLEAR PLANT
PO BOX 2000
DECATUR, ALABAMA 35609-2000

UNIT: TWO CYCLE: 12 COMMERCIAL SERVICE DATE: MARCH 1, 1977

CERTIFICATION OF AUTHORIZATION: NOT REQUIRED
NATIONAL BOARD NUMBER FOR UNIT: NOT REQUIRED

System	Component Number	ISO Drawing	Exam Requirement	Category	Item Number	Exam Scheduled	Calibration Standard	Exam Date	Exam Report	Exam Results	Comments
CSS	DCS-2-07	2-ISI-0271-C-01	B02-02	C	NU0313	UT	WB-83	20030304	R-127	P	
CSS	DCS-2-13A	2-ISI-0271-C-01	B02-02	C	NU0313	UT	WB-83	20030306	R-139	P	
CSS	DSCS-2-01	2-ISI-0271-C-01	B02-02	C	NU0313	UT	WB-83	20030227	R-075	P	
CSS	DSCS-2-02	2-ISI-0271-C-01	B02-02	C	NU0313	UT	WB-83	20030226	R-070	P	
CSS	TCS-2-407	2-ISI-0271-C-01	B04-02	B-J	TS3432	UT	WB-79	20030304	R-126	P	
FWS	GFW-2-15	2-ISI-0269-C-01	B04-02	B-J	TS3432	UT	WB-80	20030301	R-100	P	
FWS	KFW-2-38	2-ISI-0269-C-01	B04-02	B-J	TS3432	UT	WB-79	20030301	R-094	P	
FWS	KFW-2-39	2-ISI-0269-C-01	B04-02	B-J	TS3432	UT	WB-80	20030301	R-101	P	
HPCIS	THPCI-2-072	2-ISI-0273-C-01	B04-02	B-J	TS3432	UT	BF-50	20030304	R-123	P	
MSS	2-47B400S0098	2-ISI-0279-C-02	V01-02	F-A	F1.10D	VT-3		20030307	R-140	P	Voluntary exam for Civil Engr. VT-3 for support pin to pin. Perform VT-1 for IA 2-47B400S0098-IA per Civil Engr. request.
MSS	2-47B400S0098-IA	2-ISI-0279-C-02	V01-02	B-K	B10.20	VT-1		20030307	R-140	P	Voluntary exam for Civil Engr. Also performed a VT-3 on support 2-47B400S0098 pin to pin exam.
MSS	GMS-2-24	2-ISI-0222-C-02	B04-02	B-J	TS3432	UT	WB-80	20030227	R-076	P	
MSS	GMS-2-32	2-ISI-0222-C-01	B04-02	B-J	TS3432	UT	WB-80	20030228	R-088	P	
RECIR	KR-2-24	2-ISI-0270-C-02	B02-02	C	NU0313	UT	WB-83	20030225	R-064	P	
RECIR	KR-2-25	2-ISI-0270-C-02	B02-02	C	NU0313	UT	WB-83	20030226	R-066	P	
RECIR	KR-2-45	2-ISI-0270-C-01	B02-02	C	NU0313	UT	WB-83	20030228	R-087	P	
RHRS	DRHR-2-03B	2-ISI-0221-C-01	B02-02	G	NU0313	VT-2		20030313	R-158	P	
RHRS	DRHR-2-13B	2-ISI-0221-C-01	B02-02	G	NU0313	VT-2		20030313	R-158	P	
RHRS	DSRHR-2-07	2-ISI-0221-C-01	B04-02	B-J	TS3432	UT	WB-83	20030302	R-111	P	
RHRS	DSRHR-2-07	2-ISI-0221-C-01	B02-02	C	NU0313	UT	WB-83	20030302	R-111	P	

EXAM REQUIREMENT
0TI365
B01-02
B02-02
B04-02
B07-02
V01-01

OWNER: TENNESSEE VALLEY AUTHORITY
NUCLEAR POWER GROUP
1101 MARKET STREET
CHATTANOOGA, TENNESSEE 37402

PLANT: BROWNS FERRY NUCLEAR PLANT
PO BOX 2000
DECATUR, ALABAMA 35609-2000

UNIT: TWO CYCLE: 12 COMMERCIAL SERVICE DATE: MARCH 1, 1977

CERTIFICATION OF AUTHORIZATION: NOT REQUIRED
NATIONAL BOARD NUMBER FOR UNIT: NOT REQUIRED

System	Component Number	ISO Drawing	Exam Requirement	Category	Item Number	Exam Scheduled	Calibration Standard	Exam Date	Exam Report	Exam Results	Comments
RHRS	FCV-74-47	2-ISI-0221-C-01	V01-02	B-M-2	B12.50	VT-3		20030306	R-138	P	Voluntary VT-3 of new wedge after machining. Reference Report # R-118.
RHRS	FCV-74-47	2-ISI-0221-C-01	V01-02	B-M-2	B12.50	VT-3		20030303	R-118	P	voluntary VT-3 of smart stem and wedge. Reference Report # R-138.
RPV	N-16A-SE	2-ISI-0383-C-01	B07-02	BWRVIP-49	N/A	VT-2		20030313	R-158	P	
RPV	N-16B-SE	2-ISI-0383-C-02	B07-02	BWRVIP-49	N/A	VT-2		20030313	R-158	P	
RPV	N10-SE	2-ISI-0380-C-01	B07-02	BWRVIP-27	N/A	VT-2		20030313	R-158	P	
RPV	N11A-SE	2-ISI-0383-C-01	B07-02	BWRVIP-49	N/A	VT-2		20030313	R-158	P	
RPV	N11B-SE	2-ISI-0383-C-02	B07-02	BWRVIP-49	N/A	VT-2		20030313	R-158	P	
RPV	N12A-SE	2-ISI-0383-C-01	B07-02	BWRVIP-49	N/A	VT-2		20030313	R-158	P	
RPV	N12B-SE	2-ISI-0383-C-02	B07-02	BWRVIP-49	N/A	VT-2		20030313	R-158	P	
RPV	N4A-FW-SPARG	2-CHM-2046-C-02	B01-02	NU0619	N/A	VT-1		20030307	R-169	P	VENDOR PROCEDURE 54-ISI-363-00.
RPV	N4A-IR/NB	2-ISI-0277-C-01	B01-02	B-D	NU0619	UT	BF-18	20030302	R-141	P	Exam performed by Framatome
RPV	N4B-FW-SPARG	2-CHM-2046-C-02	B01-02	NU0619	N/A	VT-1		20030307	R-169	P	VENDOR PROCEDURE 54-ISI-363-00.
RPV	N4B-IR/NB	2-ISI-0277-C-01	B01-02	B-D	NU0619	UT	BF-18	20030304	R-142	P	Exam performed by Framatome
RPV	N4C-FW-SPARG	2-CHM-2046-C-02	B01-02	NU0619	N/A	VT-1		20030307	R-169	P	VENDOR PROCEDURE 54-ISI-363-00.
RPV	N4C-IR/NB	2-ISI-0277-C-01	B01-02	B-D	NU0619	UT	BF-18	20030301	R-143	P	Exam performed by Framatome
RPV	N4D-FW-SPARG	2-CHM-2046-C-02	B01-02	NU0619	N/A	VT-1		20030307	R-169	P	VENDOR PROCEDURE 54-ISI-363-00.
RPV	N4D-IR/NB	2-ISI-0277-C-01	B01-02	B-D	NU0619	UT	BF-18	20030304	R-144	P	Exam performed by Framatome
RPV	N4E-FW-SPARG	2-CHM-2046-C-02	B01-02	NU0619	N/A	VT-1		20030307	R-169	P	VENDOR PROCEDURE 54-ISI-363-00.
RPV	N4E-IR/NB	2-ISI-0277-C-01	B01-02	B-D	NU0619	UT	BF-18	20030302	R-145	P	Exam performed by Framatome
RPV	N4F-FW-SPARG	2-CHM-2046-C-02	B01-02	NU0619	N/A	VT-1		20030307	R-169	P	VENDOR PROCEDURE 54-ISI-363-00.
RPV	N4F-IR/NB	2-ISI-0277-C-01	B01-02	B-D	NU0619	UT	BF-18	20030304	R-146	P	Exam performed by Framatome

EXAM REQUIREMENT
0TI365
B01-02
B02-02
B04-02
B07-02
V01-01

OWNER: TENNESSEE VALLEY AUTHORITY
NUCLEAR POWER GROUP
1101 MARKET STREET
CHATTANOOGA, TENNESSEE 37402

PLANT: BROWNS FERRY NUCLEAR PLANT
PO BOX 2000
DECATUR, ALABAMA 35609-2000

UNIT: TWO CYCLE: 12 COMMERCIAL SERVICE DATE: MARCH 1, 1977

CERTIFICATION OF AUTHORIZATION: NOT REQUIRED
NATIONAL BOARD NUMBER FOR UNIT: NOT REQUIRED

System	Component Number	ISO Drawing	Exam Requirement	Category	Item Number	Exam Scheduled	Calibration Standard	Exam Date	Exam Report	Exam Results	Comments
RPV	RPV CORE PLATE	2-CHM-2046-C-02	0TI365	N/A	N/A	VT-3		20030309	R-169	P	VENDOR PROCEDURE 54-ISI-363-00.
RPV	RPV CS PIPING	2-CHM-2046-C-02	0TI365	N/A	N/A	EVT		20030307	R-169	P	VENDOR PROCEDURE 54-ISI-363-00. CS PIPING, PIPING WELDS, T-BOX
RPV	RPV CS PIPING	2-CHM-2046-C-02	0TI365	N/A	N/A	VT-1		20030307	R-169	P	VENDOR PROCEDURE 54-ISI-363-OO. CS SPARGER PIPING AND WELDS AND SPARGER BRACKET WELDS.
RPV	RPV JET PUMPS	2-CHM-2046-C-02	0TI365	N/A	N/A	EVT		20030307	R-169	P	VENDOR PROCEDURE 54-ISI-363-00. Reference Report # R-169 and BFN PER 03-004060-000 Jet Pump # 16 acceptable for one more cycle.
RPV	RPV JET PUMPS	2-CHM-2046-C-02	0TI365	N/A	N/A	VT-1		20030307	R-169	P	VENDOR PROCEDURE 54-ISI-363-00. Jet Pump # 4, 7, 13, 14, 17, and 20 show wear in the wedge assembly between the wedge and restrainer bracket.
RPV	RPV JET PUMPS	2-CHM-2046-C-02	0TI365	N/A	N/A	VT-3		20030307	R-169	P	VENDOR PROCEDURE 54-ISI-363-00. ANNULUS DEBRIS INSPECTION.
RPV	RPV STEAM DRYER	2-CHM-2046-C-02	0TI365	N/A	N/A	EVT		20030307	R-169	P	VENDOR PROCEDURE 54-ISI-363-00. MAN HOLE COVERS @ 90 Degrees and 270 Degrees.
RPV	RPV TOP GUIDE	2-CHM-2046-C-02	0TI365	N/A	N/A	EVT		20030307	R-169	P	VENDOR PROCEUDRE 54-ISI-363-00.
RPV	RPV TOP GUIDE	2-CHM-2046-C-02	0TI365	N/A	N/A	VT-1		20030307	R-169	P	VENDOR PROCEDURE 54-ISI-363-00.
RPV	RPV TOP GUIDE	2-CHM-2046-C-02	0TI365	N/A	N/A	VT-3		20030307	R-169	P	VENDOR PROCEDURE 54-ISI-363-00. DEBRIS INSPECTION OF TOP GUIDE AREA.
RWCU	DSRWC-2-06	2-ISI-0272-C-01	B04-02	B-J	TS3432	UT	WB-83	20030302	R-109	P	
RWCU	DSRWC-2-06	2-ISI-0272-C-01	B02-02	C	NU0313	UT	WB-83	20030302	R-109	P	

OWNER: TENNESSEE VALLEY AUTHORITY OFFICE OF NUCLEAR POWER 1101 MARKET STREET CHATTANOOGA, TENNESSEE 37402	PLANT: BROWNS FERRY NUCLEAR PLANT P.O. BOX 2000 DECATUR, ALABAMA 35602
UNIT: TWO	CERTIFICATE OF AUTHORIZATION: NOT REQUIRED.
COMMERCIAL SERVICE DATE: MARCH 1, 1975	
NATIONAL BOARD NUMBER FOR UNIT: NOT REQUIRED.	

ATTACHMENT 2

IWE-BFN CONTAINMENT INSERVICE INSPECTION (CISI) PROGRAM

OWNER: TENNESSEE VALLEY AUTHORITY OFFICE OF NUCLEAR POWER 1101 MARKET STREET CHATTANOOGA, TENNESSEE 37402	PLANT: BROWNS FERRY NUCLEAR PLANT P.O. BOX 2000 DECATUR, ALABAMA 35602
UNIT: TWO	CERTIFICATE OF AUTHORIZATION: NOT REQUIRED.
COMMERCIAL SERVICE DATE: MARCH 1, 1975	
NATIONAL BOARD NUMBER FOR UNIT: NOT REQUIRED.	

BFN CONTAINMENT INSERVICE INSPECTION (CISI) PROGRAM U2C12 REFUELING OUTAGE SUMMARY REPORT

Unit:	BFN Unit 2
Refueling Outage:	U2C12
Period/Interval:	Second Period of the First Interval
Code of Record:	ASME Section XI, 1992 Edition/1992 Addenda
Program Procedure:	0-TI-376, Revision 3

Summary of Examinations

The records contained within the U2C12 Site Final Report comprise the Containment Inservice examinations performed to implement the requirements of ASME Section XI, Subsection IWE. The examinations are summarized as follows:

Table IWE-2500-1, Examination Category E-A, Containment Surfaces
The General Visual Examination of accessible containment surfaces was completed during U2C12. This examination was performed by procedure 2-TI-173; a copy of the examination is incorporated in the Site Final Report. This completes all examinations required by Code Category E-A Item Number E1.11 for the Second Period. Visual examination of the drywell liner below the Moisture Seal Barrier (MSB) was performed in areas where the MSB was excavated for replacement.

Table IWE-2500-1, Examination Category E-C, Containment Surfaces Requiring Augmented Examination
During U2C12, 100% of the Pressure Suppression Chamber exterior air/water interface area was examined. The air/water interface is the only area currently identified as an augmented area for BFN Unit 2. This completes 50% of the examinations required by Code Category E-C Item Number E4.11 for the Second Period.

Table IWE-2500-1, Examination Category E-D, Seals, Gaskets, and Moisture Barriers
No examinations were performed in this category.

Table IWE-2500-1, Examination Category E-G, Pressure Retaining Bolting
No examinations were performed in this category.

Table IWE-2500-1, Examination Category E-P, Seals, Gaskets, and Moisture Barriers
Appendix J testing was performed in accordance with the Containment Leak Rate Program.
A VT-1 pre-service examination was performed for replaced bolting materials.

OWNER: TENNESSEE VALLEY AUTHORITY OFFICE OF NUCLEAR POWER 1101 MARKET STREET CHATTANOOGA, TENNESSEE 37402	PLANT: BROWNS FERRY NUCLEAR PLANT P.O. BOX 2000 DECATUR, ALABAMA 35602
UNIT: TWO	CERTIFICATE OF AUTHORIZATION: NOT REQUIRED.
COMMERCIAL SERVICE DATE: MARCH 1, 1975	
NATIONAL BOARD NUMBER FOR UNIT: NOT REQUIRED.	

BFN CONTAINMENT INSERVICE INSPECTION PROGRAM

ASME SECTION XI SUBSECTION IWE

The information contained in this Appendix is provided in accordance with the requirements of 10CFR 50 55a(b)(2)(ix)(A), evaluation of inaccessible areas, and 10CFR50.55a(b)(2)(ix)(D), evaluation for additional examinations, as they pertain to containment inservice examinations performed during the BFN Unit 2 Cycle 12 refueling outage.

The subject examinations were performed in accordance with ASME Section XI Subsection IWE, 1992 Edition/1992 Addenda. BFN Unit 2 is in the second period of the first examination interval.

Report No:	CISI-212-015 CISI-212-016	**Component:** Drywell Liner Below Moisture Seal Barrier

Condition/Indication: Discoloration, pitting, surface discontinuities, corrosion.

EVALUATION OF INACCESSIBLE AREAS 10CFR50.55a(b)(2)(ix)(A)

(1) Description of the type and estimated extent of degradation, and the conditions that led to the degradation:

NOI U2C12-003 documents indication noted during a VT-3 examination of the steel containment vessel in areas where the moisture seal barrier was excavated for replacement. This examination was performed to determine the condition of this normally inaccessible area.

(2) Evaluation of each area, and the result of the evaluation:

The subject indications have been evaluated to be acceptable. There is no degradation which affects the structural integrity or containment function of the steel containment vessel.

(3) Description of necessary corrective actions:

The conditions noted are expected conditions with respect ot the age and service conditions of the component. The moisture seal barrier has been examined and defective portions replaced. Therefore, no adverse condition exists that may be present in inaccessible areas.

ADDITIONAL EXAMINATIONS 10CFR 50.55a(b)(2)(ix)(D)

(1) Description of each flaw or area, including the extent of degradation, and the conditions that led to the degradation:

OWNER: TENNESSEE VALLEY AUTHORITY OFFICE OF NUCLEAR POWER 1101 MARKET STREET CHATTANOOGA, TENNESSEE 37402	PLANT: BROWNS FERRY NUCLEAR PLANT P.O. BOX 2000 DECATUR, ALABAMA 35602
UNIT: TWO	CERTIFICATE OF AUTHORIZATION: NOT REQUIRED.
COMMERCIAL SERVICE DATE: MARCH 1, 1975	
NATIONAL BOARD NUMBER FOR UNIT: NOT REQUIRED.	

NOI U2C12-003 documents indication noted during a VT-3 examination of the steel containment vessel in areas where the moisture seal barrier was excavated for replacement. This examination was performed to determine the condition of this normally inaccessible area.

(2) The acceptability of each flaw or area, and the need for additional examinations to verify that similar degradation does not exist in similar components:
The subject indications have been evaluated to be acceptable. There is no degradation which affects the structural integrity or containment function of the steel containment vessel.

(3) A description of the necessary corrective actions:
The condition documented is not considered to be a defective condition with respect to the containment vessel. The condition of moisture intrusion into this area is being corrected by repair of the moisture seal barrier,.

(4) The number and type of additional examinations to ensure detection of similar degradation in similar components:
The condition of moisture intrusion into this area is being corrected by repair of the moisture seal barrier. Therefore, additional exams are not warranted.

Report No: CISI-212-007, CISI-212-008, CISI-212-009, CISI-212-010, CISI-212-011, CISI-212-012, CISI-212-013, CISI-212-014.

Component: Drywell Liner Interior Surface

Condition/Indication: Blistering, peeling, and mechanical damage.

EVALUATION OF INACCESSIBLE AREAS 10CFR50.55a(b)(2)(ix)(A)

(1) Description of the type and estimated extent of degradation, and the conditions that led to the degradation:
NOI-U2C12-007 documents the indications noted during VT-3 examination of the containment vessel surface in areas identified for coating removal. The indications noted consist of areas of coating delamination, peeling, and mechanical damage of the applied coating. These examinations were performed to satisfy the requirements of IWE 2500 (b), examination of coatings prior to removal.

(2) Evaluation of each area, and the result of the evaluation:
The exposed liner surface in these areas was inspected after coating removal and is in good condition with no reportable conditions. There is no degradation that affects the structural integrity or leak tightness of the containment vessel.

(3) Description of necessary corrective actions:
There is no degradation that affects the structural integrity or leak tightness of the containment vessel. The conditions are expected conditions based on age and service condition of the component. Therefore, no adverse condition exists that may be present in inaccessible areas.

OWNER: TENNESSEE VALLEY AUTHORITY OFFICE OF NUCLEAR POWER 1101 MARKET STREET CHATTANOOGA, TENNESSEE 37402	PLANT: BROWNS FERRY NUCLEAR PLANT P.O. BOX 2000 DECATUR, ALABAMA 35602
UNIT: TWO	CERTIFICATE OF AUTHORIZATION: NOT REQUIRED.
COMMERCIAL SERVICE DATE: MARCH 1, 1975	
NATIONAL BOARD NUMBER FOR UNIT: NOT REQUIRED.	

ADDITIONAL EXAMINATIONS 10CFR 50.55a(b)(2)(ix)(D)

(1) Description of each flaw or area, including the extent of degradation, and the conditions that led to the degradation:

NOI-U2C12-007 documents the indications noted during VT-3 examination of the containment vessel surface I areas identified for coating removal. The indications noted consist of areas of coating delamination, peeling, and mechanical damage of the applied coating. These examinations were performed to satisfy the requirements of IWE 2500 (b), examination of coatings prior to removal.

(2) The acceptability of each flaw or area, and the need for additional examinations to verify that similar degradation does not exist in similar components:

There is no degradation that affects the structural integrity or leak tightness of the containment vessel. The conditions are expected conditions based on age and service condition of the component.

(3) A description of the necessary corrective actions:

Areas of coating failure (e.g. delamination, peeling, etc.) were scraped back until proper coating adhesion (sound coating) was obtained. In areas where the topcoat has been scraped back to sound coating, the zinc primer is intact and will provide corrosion protection for the primary containment boundary. Re-coating will be done in accordance with MAI-5.3 during future outage maintenance work.

(4) The number and type of additional examinations to ensure detection of similar degradation in similar components:

The condition noted is not considered a defective condition with respect to the containment vessel. The condition has been addressed by removal of the coating and examination of the liner in the affected areas. Therefore, additional examinations are not warranted.

ENCLOSURE 2

TENNESSEE VALLEY AUTHORITY
BROWNS FERRY NUCLEAR PLANT (BFN)
UNIT 2
AMERICAN SOCIETY OF MECHANICAL ENGINEERS (ASME),
SECTION XI, THIRD TEN-YEAR INSPECTION INTERVAL

REPAIR AND REPLACEMENTS PROGRAM

SUMMARY REPORT (NIS-2) FOR UNIT 2 CYCLE 12 OPERATION

(SEE ATTACHED)

BROWNS FERRY

NUCLEAR PLANT

UNIT 2 CYCLE 12

ASME SECTION XI

NIS-2

OWNER'S SUMMARY REPORT

OWNER'S REPORT FOR REPAIRS OR REPLACEMENTS

APPENDIX I _____ **Summary of Repair and Replacement Activities**

APPENDIX II _____ **Form NIS-2 Owner's Report For Repairs or Replacements**

Owner:	TENNESSEE VALLEY AUTHORITY 1101 Market Street Chattanooga, TN 37402-2801	Plant:	Browns Ferry Nuclear Plant P. O. Box 2000 Decatur, AL 35609-2000
Unit:	Two	Certificate of Authorization:	Not Required
Commercial Service Date:	March 1, 1975		
National Board Number for Unit:	Not Required		

APPENDIX I

SUMMARY OF REPAIR AND REPLACEMENT ACTIVITIES

Owner: TENNESSEE VALLEY AUTHORITY
1101 Market Street
Chattanooga, TN 37402-2801

Plant: Browns Ferry Nuclear Plant
P. O. Box 2000
Decatur, AL 35609-2000

Unit: Two

Certificate of Authorization: Not Required

Commercial Service Date: March 1, 1975

National Board Number for Unit: Not Required

WID	SYS	ORG	CLASS	ACTIVITY
01-004322-000	74	MAINT	2	REPLACEMENT
01-012367-000	69	MAINT	1	REPAIR
02-010882-000 through 02-010882-011	85	MAINT	1	REPLACEMENT
03-004126-000	1	MAINT	1	REPLACEMENT
00-005306-000 02-006771-000 02-007272-000	3	MAINT	1	REPLACEMENT
03-003454-000	73	MAINT	1	REPLACEMENT
03-004119-000	74	MAINT	1	REPLACEMENT
03-002011-000 03-002012-000 03-006052-000	85	MAINT	2	REPLACEMENT
02-004844-000 02-010075-000	1	MAINT	2	REPLACEMENT
03-001972-000 03-003606-000	1	MAINT	2	REPLACEMENT
02-004442-000	1	MAINT	2	REPLACEMENT
02-006492-000	1	MAINT	1	REPLACEMENT
99-013131-000	74	MAINT	1	REPLACEMENT
DCN T40978A 98-014823-000	77	TVA	2	REPLACEMENT
DCN 51246A 02-006939-000 02-006939-001 02-006939-001	68	TVA	1	REPLACEMENT
DCN 51308A 02-009276-000	68	TVA	1	REPLACEMENT
DCN 50879A 02-009284-002 02-009284-003 02-009284-009	85	TVA	2	REPLACEMENT

Owner:	TENNESSEE VALLEY AUTHORITY 1101 Market Street Chattanooga, TN 37402-2801	Plant:	Browns Ferry Nuclear Plant P. O. Box 2000 Decatur, AL 35609-2000
Unit:	Two	Certificate of Authorization:	Not Required
Commercial Service Date:	March 1, 1975		
National Board Number for Unit:	Not Required		

LEGEND

WID - Work Implementing Document
Example: A99999 refers to a Design Change Notice
99-999999-999 refers to a Work Order

SYS- System

1 - Main Steam
3 - Reactor Feedwater
8 - Turbine Drains
10 - Reactor Drains, Vents and Blowdown
12 - Auxiliary Boiler
63 - Standby Liquid Control
68 - Reactor Water Recirculation
69 - Reactor Water Cleanup
71 - Reactor Core Isolation Cooling
73 - High Pressure Coolant Injection
74 - Residual Heat Removal
75 - Core Spray
77 - Radwaste
85 - Control Rod Drive
92 - Neutron Monitoring

ORG - Organization which performed the WID
MAINT - TVA's Maintenance Organization
GE - General Electric Company
TVA - Work performed by Stone and Webster Engineering Corporation utilizing TVA's Quality Assurance Program and procedures

CLASS - Refers to ASME Code Class 1 or 2

ACTIVITY - Classifies work activity as being repair or replacement

Owner:	TENNESSEE VALLEY AUTHORITY 1101 Market Street Chattanooga, TN 37402-2801	Plant:	Browns Ferry Nuclear Plant P. O. Box 2000 Decatur, AL 35609-2000
Unit:	Two	Certificate of Authorization:	Not Required
Commercial Service Date:	March 1, 1975		
National Board Number for Unit:	Not Required		

APPENDIX II

FORM NIS-2 OWNER'S REPORT FOR REPAIRS OR REPLACEMENTS

FORM NIS-2 OWNER'S REPORT FOR REPAIR/REPLACEMENT ACTIVITY
As Required by the Provisions of the ASME Code Section XI

1. Owner Tennessee Valley Authority (TVA) (Name)
1101 Market Street
Chattanooga, TN 37402-2801 (Address)

Date October 26, 2001

Sheet 1 of 1

2. Plant Browns Ferry Nuclear Plant (BFN) (Name)
P. O. Box 2000, Decatur, AL 35609-2000 (Address)

Unit 2

Work Order (WO) 01-004322-000
Repair/Replacement Organization P.O. No., Job No., etc.

3. Work Performed by TVA-BFN (Name)
P. O. Box 2000, Decatur, AL 35609-2000 (Address)

Type Code Symbol Stamp N/A
Authorization No. N/A
Expiration Date N/A

4. Identification of System System 074, Residual Heat Removal (RHR) System (ASME Code Class 2 equivalent)

5. (a) Applicable Construction Code USAS B31.1.0 19 67 * Edition, N/A Addenda, N/A Code Case

(b) Applicable Edition of Section XI Utilized for Repairs or Replacements 19 95 Edition, 1996 Addenda

6. Identification of Components

Name of Component	Name of Manufacturer	Manufacturer Serial No.	National Board No.	Other Identification	Year Built	Corrected, Removed, or Installed	ASME Code Stamped (Yes or No)
RHR PUMP B DISCH CHECK VLV	Wm. Powell Co. 3061AWE	N/A	N/A	2-FCV-074-0559B	N/A	*	No
* - replaced valve disc							
Valve disc	Wm. Powell Co.	N/A	N/A	2-FCV-074-0559B	N/A	replaced	No
Valve disc	Wm. Powell Co.	N/A	N/A	2-FCV-074-0559B	1976	replacement	No

7. Description of Work Replaced valve disc.

8. Tests Conducted: Hydrostatic ☐ Pneumatic ☐ Nominal Operating Pressure ☒ Exempt ☐
Other ☐ Pressure N/A psi Test Temp. N/A °F

NOTE: Supplemental Sheets in form of lists, sketches, or drawings may be used, provided (1) size is 8½ in. X 11 in., (2) information in items 1 through 6 on this report is included on each sheet, and (3) each sheet is numbered and the number of sheets is recorded at the top of this form.

*as amended by additional quality assurance requirements found in Contracts 75P52-49395 & 68C37-91062, Design Criteria BFN-50-7074 & BFN-50-C-7105,

FORM NIS-2 (Back)

9. Remarks Replaced valve disc.

Applicable Manufacturer's Data Reports to be attached

CERTIFICATE OF COMPLIANCE

I certify that the statements made in the report are correct and this conforms to the rules of the ASME Code, Section XI.

Type Code Symbol Stamp N/A

Certificate of Authorization No. N/A Expiration Date N/A

Signed Stephen G. Willard, System Engineer Date 11/5, 20 01

Owner or Owner's Designee, Title

CERTIFICATE OF INSERVICE INSPECTION

I, the undersigned, holding a valid commission issued by the National Board of Boiler and Pressure Vessel Inspectors and the State or Province of TENNESSEE and employed by HSB CT of HARTFORD, CT have inspected the components described in this Owner's Report during the period 4.27.01 to 4.30.01, and state that to the best of my knowledge and belief, the Owner has performed examinations and taken corrective measures described in this Owner's Report in accordance with the requirements of the ASME Code, Section XI.

By signing this certificate neither the Inspector nor his employer makes any warranty, expressed or implied, concerning the examinations and corrective measures described in this Owner's Report. Furthermore, neither the Inspector nor his employer shall be liable in any manner for any personal injury or property damage or a loss of any kind arising from or connected with this inspection.

Albert Todd Commissions TN 3135 A B I N NS

Inspector's Signature National Board, State, Province, and Endorsements

Date May 27 2003

FORM NIS-2 OWNER'S REPORT FOR REPAIR/REPLACEMENT ACTIVITY
As Required by the Provisions of the ASME Code Section XI

1. Owner Tennessee Valley Authority (TVA) (Name)
   1101 Market Street
   Chattanooga, TN 37402-2801 (Address)

   Date October 26, 2002

   Sheet 1 of 1

2. Plant Browns Ferry Nuclear Plant (BFN) (Name)
   P. O. Box 2000, Decatur, AL 35609-2000 (Address)

   Unit 2

   Work Order (WO) 01-012367-000
   Repair/Replacement Organization P.O. No., Job No., etc.

3. Work Performed by TVA-BFN (Name)
   P. O. Box 2000, Decatur, AL 35609-2000 (Address)

   Type Code Symbol Stamp N/A

   Authorization No. N/A

   Expiration Date N/A

4. Identification of System System 069, Reactor Water Cleanup (RWCU) System (ASME Code Class 1 equivalent)

5. (a) Applicable Construction Code USAS B31.1.0 19 67 * Edition, N/A Addenda, N/A Code Case

   (b) Applicable Edition of Section XI Utilized for Repairs or Replacements 19 95 Edition, 1996 Addenda

6. Identification of Components

Name of Component	Name of Manufacturer	Manufacturer Serial No.	National Board No.	Other Identification	Year Built	Corrected, Removed, or Installed	ASME Code Stamped (Yes or No)
RWCU pipe weld	TVA	N/A	N/A	RWCU-2-3-41	N/A	Corrected	No

7. Description of Work Repaired weld.

8. Tests Conducted: Hydrostatic ☐ Pneumatic ☐ Nominal Operating Pressure ☒* Exempt ☐ * - Code Case N-416-1

   Other ☐ Pressure N/A psi Test Temp. N/A °F

NOTE: Supplemental Sheets in form of lists, sketches, or drawings may be used, provided (1) size is 8½ in. X 11 in., (2) information in items 1 through 6 on this report is included on each sheet, and (3) each sheet is numbered and the number of sheets is recorded at the top of this form.

*as amended by additional quality assurance requirements found in Contract 117240, Design Criteria BFN-50-7069 & BFN-50-C-7105.

FORM NIS-2 (Back)

9. Remarks Repaired weld. Reference Code Case N-416-1.
Applicable Manufacturer's Data Reports to be attached

CERTIFICATE OF COMPLIANCE

I certify that the statements made in the report are correct and this conforms to the rules of the ASME Code, Section XI.

Type Code Symbol Stamp N/A

Certificate of Authorization No. N/A Expiration Date N/A

Signed Stephen C. Willard, System Engineer Date 5/13, 20 03
Owner or Owner's Designee, Title

CERTIFICATE OF INSERVICE INSPECTION

I, the undersigned, holding a valid commission issued by the National Board of Boiler and Pressure Vessel Inspectors and the State or Province of Tennessee and employed by HSB CT of Connecticut have inspected the components described in this Owner's Report during the period 12.5.2001 to 12.8.2001, and state that to the best of my knowledge and belief, the Owner has performed examinations and taken corrective measures described in this Owner's Report in accordance with the requirements of the ASME Code, Section XI.

By signing this certificate neither the Inspector nor his employer makes any warranty, expressed or implied, concerning the examinations and corrective measures described in this Owner's Report. Furthermore, neither the Inspector nor his employer shall be liable in any manner for any personal injury or property damage or a loss of any kind arising from or connected with this inspection.

Albert Ladd
Inspector's Signature

Commissions TN 3135 A B I N NS
National Board, State, Province, and Endorsements

Date May 28 2003

FORM NIS-2 OWNER'S REPORT FOR REPAIR/REPLACEMENT ACTIVITY
As Required by the Provisions of the ASME Code Section XI

1. Owner Tennessee Valley Authority (TVA) (Name)
1101 Market Street
Chattanooga, TN 37402-2801 (Address)

Date April 29, 2003

Sheet 1 of 2

2. Plant Browns Ferry Nuclear Plant (BFN) (Name)
P. O. Box 2000, Decatur, AL 35609-2000 (Address)

Unit 2

Work Orders (WO) 02-010882-000 through 02-010882-011, Design Change Notice (DCN) S18883A
Repair/Replacement Organization P.O. No., Job No., etc.

3. Work Performed by TVA-BFN (Name)
P. O. Box 2000, Decatur, AL 35609-2000 (Address)

Type Code Symbol Stamp N/A
Authorization No. N/A
Expiration Date N/A

4. Identification of System System 085, Control Rod Drive (CRD) System (ASME Code Class 1 equivalent)

5. (a) Applicable Construction Code ASME Section III 19 74 Edition, Winter 1975 Addenda, N207 1361-2 Code Case

(b) Applicable Edition of Section XI Utilized for Repairs or Replacements 19 95 Edition, 1996 Addenda

6. Identification of Components

Name of Component	Name of Manufacturer	Manufacturer Serial No.	National Board No.	Other Identification	Year Built	Corrected, Removed, or Installed	ASME Code Stamped (Yes or No)
Control Rod Drive Mechanism 42-23	General Electric Nuclear Energy	A5439	N/A	2-CRDM-085-42-23	1996	Removed	Yes
Control Rod Drive Mechanism 42-23	General Electric Nuclear Energy	A3421	N/A	2-CRDM-085-42-23	1996	Installed	Yes
Control Rod Drive Mechanism 02-23	General Electric Nuclear Energy	A5068	N/A	2-CRDM-085-02-23	1996	Removed	Yes
Control Rod Drive Mechanism 02-23	General Electric Nuclear Energy	A2120	N/A	2-CRDM-085-02-23	1996	Installed	Yes
Control Rod Drive Mechanism 02-31	General Electric Nuclear Energy	A4419	N/A	2-CRDM-085-02-31	1996	Removed	Yes
Control Rod Drive Mechanism 02-31	General Electric Nuclear Energy	A3469	N/A	2-CRDM-085-02-31	1996	Installed	Yes

Identification of Components continued on Page 2

7. Description of Work Replaced 12 Control Rod Drives (CRD) with new BWR/6 CRDs.

8. Tests Conducted: Hydrostatic ☐ Pneumatic ☐ Nominal Operating Pressure ☒ Exempt ☐

Other ☐ Pressure N/A psi Test Temp. N/A °F

NOTE: Supplemental Sheets in form of lists, sketches, or drawings may be used, provided (1) size is 8½ in. X 11 in., (2) information in items 1 through 6 on this report is included on each sheet, and (3) each sheet is numbered and the number of sheets is recorded at the top of this form.

FORM NIS-2 (Back)

9. Remarks Replaced 12 Control Rod Drives (CRD) with new BWR/6 CRDs under the following WOs. The N-2 data reports are attached.

Applicable Manufacturer's Data Reports to be attached

WO 02-010882-000	2-CRDM-085-42-23
WO 02-010882-001	2-CRDM-085-02-23
WO 02-010882-002	2-CRDM-085-02-31
WO 02-010882-003	2-CRDM-085-06-27
WO 02-010882-004	2-CRDM-085-14-15
WO 02-010882-005	2-CRDM-085-22-51
WO 02-010882-006	2-CRDM-085-30-07
WO 02-010882-007	2-CRDM-085-34-23
WO 02-010882-008	2-CRDM-085-42-27
WO 02-010882-009	2-CRDM-085-42-39
WO 02-010882-010	2-CRDM-085-46-19
WO 02-010882-011	2-CRDM-085-46-47

CERTIFICATE OF COMPLIANCE

I certify that the statements made in the report are correct and this conforms to the rules of the ASME Code, Section XI.

Type Code Symbol Stamp N/A

Certificate of Authorization No. N/A Expiration Date N/A

Signed Stephen C. Willard, System Engineer Date 5/5, 20 03

Owner or Owner's Designee, Title

CERTIFICATE OF INSERVICE INSPECTION

I, the undersigned, holding a valid commission issued by the National Board of Boiler and Pressure Vessel Inspectors and the State or Province of Tennessee and employed by HSB CT of Connecticut have inspected the components described in this Owner's Report during the period 11-6-2002 to 3-24-2003, and state that to the best of my knowledge and belief, the Owner has performed examinations and taken corrective measures described in this Owner's Report in accordance with the requirements of the ASME Code, Section XI.

By signing this certificate neither the Inspector nor his employer makes any warranty, expressed or implied, concerning the examinations and corrective measures described in this Owner's Report. Furthermore, neither the Inspector nor his employer shall be liable in any manner for any personal injury or property damage or a loss of any kind arising from or connected with this inspection.

Albert Todd Commissions TN 3132 "A" "B" "TN" "NS"

Inspector's Signature National Board, State, Province, and Endorsements

Date May 14 2003

FORM NIS-2 OWNER'S REPORT FOR REPAIRS/REPLACEMENT ACTIVITY
SUPPLEMENTAL SHEET

1. Owner Tennessee Valley Authority (TVA) (Name)
1101 Market Street
Chattanooga, TN 37402-2801 (Address)

Date April 29, 2003

Sheet 2 of 2

2. Plant Browns Ferry Nuclear Plant (BFN) (Name)
P. O. Box 2000, Decatur, AL 35609-2000 (Address)

Unit 2

Design Change Notice (DCN) S18883A,
Work Orders (WO) 02-010882-000 through 02-010882-011 (Repair/Replacement Organization P.O. No., Job No., etc.)

3. Work Performed by TVA-BFN (Name)
P. O. Box 2000, Decatur, AL 35609-2000 (Address)

Type Code Symbol Stamp N/A

Authorization No. N/A

Expiration Date N/A

4. Identification of System System 085, Control Rod Drive System (ASME Code Class 1 equivalent)

5. (a) Applicable Construction Code ASME Section III 19 74 Edition, Winter 1975 Addenda, N207 1361-2 Code Case
Applicable Edition of Section XI Utilized for Repairs or Replacements 19 95, 1996 Addenda

6. Identification of Components

Name of Component	Name of Manufacturer	Manufacturer Serial No.	National Board No.	Other Identification	Year Built	Corrected, Removed, or Installed	ASME Code Stamped (Yes or No)
Control Rod Drive Mechanism 06-27	General Electric Nuclear Energy	A4276	N/A	2-CRDM-085-06-27	1996	Removed	Yes
Control Rod Drive Mechanism 06-27	General Electric Nuclear Energy	A3989	N/A	2-CRDM-085-06-27	1996	Installed	Yes
Control Rod Drive Mechanism 14-15	General Electric Nuclear Energy	A5424	N/A	2-CRDM-085-14-15	1996	Removed	Yes
Control Rod Drive Mechanism 14-15	General Electric Nuclear Energy	A5239	N/A	2-CRDM-085-14-15	1996	Installed	Yes
Control Rod Drive Mechanism 22-51	General Electric Nuclear Energy	A4239	N/A	2-CRDM-085-22-51	1996	Removed	Yes
Control Rod Drive Mechanism 22-51	General Electric Nuclear Energy	A4207	N/A	2-CRDM-085-22-51	1996	Installed	Yes
Control Rod Drive Mechanism 30-07	General Electric Nuclear Energy	A5300	N/A	2-CRDM-085-30-07	1996	Removed	Yes
Control Rod Drive Mechanism 30-07	General Electric Nuclear Energy	A3135	N/A	2-CRDM-085-30-07	1996	Installed	Yes
Control Rod Drive Mechanism 34-23	General Electric Nuclear Energy	A4690	N/A	2-CRDM-085-34-23	1996	Removed	Yes
Control Rod Drive Mechanism 34-23	General Electric Nuclear Energy	A4055	N/A	2-CRDM-085-34-23	1996	Installed	Yes
Control Rod Drive Mechanism 42-27	General Electric Nuclear Energy	A4425	N/A	2-CRDM-085-42-27	1996	Removed	Yes
Control Rod Drive Mechanism 42-27	General Electric Nuclear Energy	A4274	N/A	2-CRDM-085-42-27	1996	Installed	Yes
Control Rod Drive Mechanism 42-39	General Electric Nuclear Energy	A4683	N/A	2-CRDM-085-42-39	1996	Removed	Yes
Control Rod Drive Mechanism 42-39	General Electric Nuclear Energy	A4421	N/A	2-CRDM-085-42-39	1996	Installed	Yes
Control Rod Drive Mechanism 46-19	General Electric Nuclear Energy	A3828	N/A	2-CRDM-085-46-19	1996	Removed	Yes
Control Rod Drive Mechanism 46-19	General Electric Nuclear Energy	A3394	N/A	2-CRDM-085-46-19	1996	Installed	Yes
Control Rod Drive Mechanism 46-47	General Electric Nuclear Energy	A3806	N/A	2-CRDM-085-46-47	1996	Removed	Yes
Control Rod Drive Mechanism 46-47	General Electric Nuclear Energy	A3224	N/A	2-CRDM-085-46-47	1996	Installed	Yes

7. Description of Work Replaced 12 Control Rod Drives (CRD) with new BWR/6 CRDs.

8. Tests Conducted: Hydrostatic ☐ Pneumatic ☐ Nominal Operating Pressure ☒ Exempt ☐
Other ☐ Pressure N/A psi Test Temp. N/A °F

HSB-CT
5/14/03

U2C12_03

FORM NIS-2, SUPPLEMENTAL SHEET (Back)

Remarks See back of sheet 1.

FORM N-2 NPT CERTIFICATE HOLDERS' DATA REPORT FOR NUCLEAR PART AND APPURTENANCES*
As required by the Provision of the ASME Code Rules, Section III, Div. I

1. Manufactured & Certified by General Electric Company Nuclear Energy (GE-NE) 001667

3901 Castle Hayne Road, Wilmington, North Carolina 28401
(Name and Address of NPT Certificate Holder)

(b) Manufactured for TVA DECATUR, AL 35609-2000
(Name and Address of N Certificate Holder for completed nuclear component)

2. Identification - Certificate holder's S/N of Part A3421 Nat'l Bd. No N/A

(a) Constructed According to Drawing No: 768E534G008 Rev 9 Dwg Prepared by D L Peterson

(b) Description of Part Inspected Control Rod Drive, Model # 7RD6144FG005

(c) Applicable ASME Code Section III, Edition 1974, Addenda Date W75, Case No N207 1361 2 Class 1

(d) Remarks: Standard part for use with Reactor Hydrostatically tested at 1925 psi min
Brief description of service for which component was designed

Sheet 1 of 2

We certify that the statements in this report are correct and this vessel part or appurtenance as defined in the code conforms to the rules of construction of the ASME Code Section III (The applicable Designed Specification and Stress Report are not the responsibility of the NPT Certificate Holder for parts. An NPT Certification Holder for appurtenances is responsible for furnishing a separate Design Specification and Stress Report if the appurtenance is not included in the component Design Specification and Stress Report)

Date 10/08/96 Signed GE-NE By [signature]
(NPT Certificate Holder) (SC QA Representative)

Certificate of Authorization Expires 6/16/99 Certification of Authorization No NPT N-1151

Certification of Design for Appurtenance

Design information on file at GE Company, San Jose, California

Stress analysis report on file at GE Company, San Jose, California

DC22A6253 Rev 2
Design specification certified by B.N. Sridhar Prof. Eng State Calif Reg No 18345

DC22A6254 Rev 1
Stress analysis report certified by Edward Yoshio Prof Eng State Calif Reg. No M016646

Certification of Shop Inspection

I, the undersigned, holding a valid commission by the National Board of Boiler and Pressure Inspectors and/or the State or Province of North Carolina and employed by Department of Labor of State of North Carolina have inspected the part of a pressure vessel described in this Partial Data Report on 9/24, 1996, and state that to the best of my knowledge and belief, the NPT Certificate Holder has constructed this part in accordance with the ASME Code Section III.
By signing this certificate, neither the Inspector nor his employer makes any warranty, expressed or implied, concerning the part described in the Partial Data Report. Furthermore, neither the Inspector nor his employer shall be liable in any manner for any personal injury or property damages or a loss of any kind arising from or connected with this Inspection.

10/8, 1996 [signature] NC 1231, Ohio, WC 3686 PA
Date Inspector's Signature National Board, State, Province And No

*Supplemental sheets in form of lists, sketches or drawing may be used provided (1) size is 8-1/2" x 11", (2) information in 1-2 on this Data Report is included on each sheet, and (3) each sheet is numbered and number of sheets is recorded in Item 3. "REMARKS".

(07/90)

001668

FORM N-2 (back)

Items 4-8 incl. to be completed for single wall vessels, jackets vessels, or shells of heat exchangers.

4. Shell: Material _____ T.S. _____ Nominal Thickness ___ in. Corrosion Allowance ___ in. Dia. ___ ft. ___ in. Length ___ ft. ___
(Kind & Spec. No.) (Min. of Range Specified)

5. Seams: Long _____ N.T.[1] _____ R.T. _____ Efficiency _____ %
Girth _____ N.T.[1] _____ R.T. _____ No. of Courses _____

6. Heads: (a) Material _____ T.S. _____ (b) Material _____ T.S. _____

	Location (Top Bottom, Ends)	Thickness	Crown Radius	Knuckle Radius	Elliptical Ratio	Conical Apex Angle	Hemispherical Radius	Flat Diameter	Side to Press. (conv. or conc.)
(a)									
(b)									

If removable, bolts used _____ (Material, Spec. No., T.S. Size Number) Other Fastening _____ (Describe or attach sketch)

7. Jacket Closure: _____
(Describe as open end weld, bar, etc. If bar give dimensions, if bolts, describe or sketch)

Drop Weight _____
Charpy Impact _____ ft-lb

8. Design pressure[2] _____1250_____ psi at _____575_____ °F at temp of _____ °F

Items 9 and 10 to be completed for tube sections

9. Tube Sheets: Stationary. Material _____ (Kind & Spec. No.) Dia. _____ (Subject to pressure) Thickness ___ in. Attachment _____ (Welded, Bolted)
Floating. Material _____ Dia. _____ Thickness ___ in. Attachment _____

10. Tubes: Material _____ O.D. _____ in. Thickness _____ inches or gage. Number _____ Type _____ (Str. or U)

Items 11 - 14 incl. to be completed for inner chambers of jacketed vessels, or channels of heat exchangers.

11. Shell: Material _____ T.S. _____ Nominal Thickness ___ in. Corrosion Allowance ___ in. Dia ___ ft. ___ in. Length ___ ft. ___
(Kind & Spec. No.) (Min. of Range Specified)

12. Seams: Long _____ N.T.[1] _____ R.T. _____ Efficiency _____ %
Girth _____ N.T.[1] _____ R.T. _____ No. of Courses _____

13. Heads: (a) Material _____ T.S. _____ (b) Material _____ T.S. _____

	Location	Thickness	Crown Radius	Knuckle Radius	Elliptical Ratio	Conical Apex Angle	Hemispherical Radius	Flat Diameter	Side to Press. (conv. or conc.)
(a)	Top, bottom, ends								
(b)	Channel								

If removable, bolts used (a)_____ (b)_____ (c)_____ Other Fastening _____ (Describe or attach sketch)

Drop Weight _____
Charpy Impact _____ ft-lb

14. Design pressure[2] _____ psi at _____ °F at temp of _____ °F

Items below to be completed for all vessels where applicable.

15. Safety Valve Outlets: Number _____ Size _____ Location _____

16. Nozzles:

Purpose (Inlet, Outlet, Drain)	Number	Dia. or Size	Type	Material	Thickness	Reinforcement Material	How Attached

17. Inspection Openings: Manholes, No. _____ Size _____ Location _____
Handholes, No. _____ Size _____ Location _____
Threaded, No. _____ Size _____ Location _____

18. Supports: Skirt _____ (Yes or No) Lugs _____ (Number) Legs _____ (Number) Other _____ (Describe) Attached _____ (Where & How)

1 - If Preheated Heat Treated.
2 - List other internal or external pressure with coincident temperature when applicable.

7288.1770

FORM N-2 NPT CERTIFICATE HOLDERS' DATA REPORT FOR NUCLEAR PART AND APPURTENANCES*
As required by the Provision of the ASME Code Rules, Section III, Div. I

1. Manufactured & Certified by : General Electric Company Nuclear Energy (GE-NE)
3901 Castle Hayne Road, Wilmington, North Carolina 28401 001669
(Name and Address of NPT Certificate Holder)

(b) Manufactured for : TVA DECATUR, AL 35609-2000
(Name and Address of N Certificate Holder for completed nuclear component)

2. Identification - Certificate Holder's S/N of Part : A3421 Nat'l Bd. No. N/A

(a) Constructed According to Drawing No: 768E534G008 Rev 9 Dwg. Prepared by D. L. Peterson

(b) Description of Part Inspected: Control Rod Drive, Model # 7RDB144FG005

(c) Applicable ASME Code: Section III , Edition 1974 , Addenda Date W75 , Case No. N207 1361-2 Class 1

3. REMARKS: Standard part for use with Reactor. Hydrostatically tested at 1825 psi. min.
(Brief description of service for which component was designed)

Sheet 2 of 2

1. Cap 166B9274P001
SA182 - F316
3/8" thick x 1 1/16" OD

2. Indicator Tube 166B9313P001
SA312 - TP316
3/4" sch 40 - seamless pipe
0.113" wall thickness
1.065" max. dia.

3. Plug 159A1176P001
SA182 - F304
1/4" thick x 0.812" OD

4. Flange 819D610P001 (719E474)
SA182 - F304
3.37" thick x 8 5/8" OD

5. Base 137C5311P001
SA182 - F304
7/8" thick x 2.875" dia.

6. Ring Flange 114B5122P002, P003
137C8151P001, P002
SA182 - F304
1" thick x 5.0" OD x 1.75" ID

7. Cap Screw 117C4516P002
SA193 - B6
6 ea. 1/2" dia. on 4 1/8" bolt circle

8. Plug 175A7961P001
SA182 - F304
0.38" thick x 1.307" dia.

9. Nut 137C5934P001
XM - 19 SA479
1.30" thick x 2.62" dia.

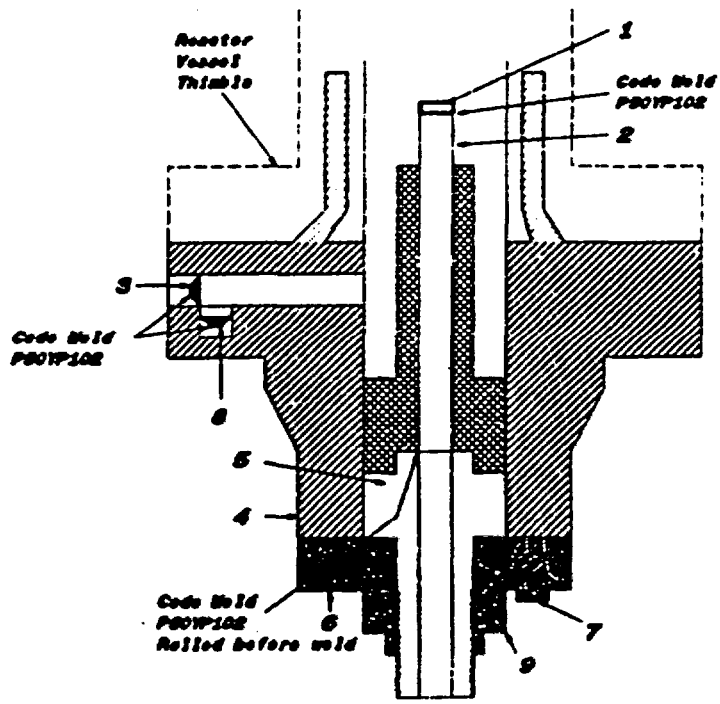

7900.1721

001394

FORM N-2 NPT CERTIFICATE HOLDERS' DATA REPORT FOR NUCLEAR PART AND APPURTENANCES*
As required by the Provision of the ASME Code Rules, Section III, Div. I

1 Manufactured & Certified by General Electric Company Nuclear Energy (GE-NE)
3901 Castle Hayne Road, Wilmington, North Carolina 28401
(Name and Address of NPT Certificate Holder)

(b) Manufactured for : TVA DECATUR, AL 35609-2000
(Name and Address of N Certificate Holder for completed nuclear component)

2 Identification - Certificate Holder's S/N of Part : A2120 Nat'l Bd. No. N/A

(a) Constructed According to Drawing No: 768E534G008 Rev 9 Dwg. Prepared by D. L. Peterson

(b) Description of Part Inspected: Control Rod Drive, Model # 7RDB144FG005

(c) Applicable ASME Code: Section III . Edition 1974 . Addenda Date W75. Case No. N207 1361-2 Class 1

3 REMARKS: Standard part for use with Reactor. Hydrostatically tested at 1825 psi. min.
(Brief description of service for which component was designed)

Sheet 1 of 2

We certify that the statements in this report are correct and this vessel part or appurtenance as defined in the code conforms to the rules of construction of the ASME Code Section III. (The applicable Designed Specification and Stress Report are not the responsibility of the NPT Certificate Holder for parts. An NPT Certification Holder for appurtenances is responsible for furnishing a separate Design Specification and Stress Report if the appurtenance is not included in the component Design Specification and Stress Report).

Date 10/08/96 Signed GE-NE By [signature]
(NPT Certificate Holder) (SC QA Representive)

Certificate of Authorization Expires: 6/16/99 Certification of Authorization No. : NPT N-1151

Certification of Design for Appurtenance

Design information on file at GE Company, San Jose, California

Stress analysis report on file at GE Company, San Jose, California

DC22A6253 Rev. 2
Design specification certified by B.N. Sridhar Prof. Eng. State Calif. Reg. No. 18345

DC22A6254 Rev 1
Stress analysis report certified by Edward Yoshio Prof. Eng. State Calif. Reg. No. M018646

Certification of Shop Inspection

I, the undersigned, holding a valid commission by the National Board of Boiler and Pressure Inspectors and/or the State or Province of North Carolina and employed by Department of Labor of State of North Carolina have inspected the part of a pressure vessel described in this Partial Data Report on 5/7, 1996, and state that to the best of my knowledge and belief, the NPT Certificate Holder has constructed this part in accordance with the ASME Code Section III.
By signing this certificate, neither the Inspector nor his employer makes any warranty, expressed or implied, concerning the part described in the Partial Data Report. Furthermore, neither the Inspector nor his employer shall be liable in any manner for any personal injury or property damages or a loss of any kind arising from or connected with this inspection.

10/8, 1996 [signature] NC 1231, Ohio, WC 3686 PA
Date Inspector's Signature National Board, State, Province And No.

*Supplemental sheets in form of lists, sketches or drawing may be used provided (1) size is 8-1/2" x 11", (2) information in 1-2 on this Data Report is included on each sheet, and (3) each sheet is numbered and number of sheets is recorded in Item 3. "REMARKS".

(07/88)

7290 1495

FORM N-2 NPT CERTIFICATE HOLDERS' DATA REPORT FOR NUCLEAR PART AND APPURTENANCES*
As required by the Provision of the ASME Code Rules, Section III, Div. I

1. Manufactured & Certified by : General Electric Company Nuclear Energy (GE-NE)
3901 Castle Hayne Road, Wilmington, North Carolina 28401 **001395**
(Name and Address of NPT Certificate Holder)

(b) Manufactured for : TVA DECATUR, AL 35609-2000
(Name and Address of N Certificate Holder for completed nuclear component)

2 Identification - Certificate Holder's S/N of Part : A2120 Nat'l Bd. No. N/A

(a) Constructed According to Drawing No: 768E534G008 Rev. 9 Dwg. Prepared by D. L. Peterson

(b) Description of Part Inspected: Control Rod Drive, Model # 7RDB144FG005

(c) Applicable ASME Code: Section III , Edition 1974 , Addenda Date W75 , Case No. N207 1361-2 Class 1

3. REMARKS: Standard part for use with Reactor. Hydrostatically tested at 1825 psi, min.
(Brief description of service for which component was designed)

Sheet 2 of 2

1. Cap 186B9274P001
SA182 - F316
3/8" thick x 1 1/16" OD

2. Indicator Tube 186B9313P001
SA312 - TP316
3/4" sch 40 - seamless pipe
0.113" wall thickness
1.065" max. dia.

3. Plug 159A1178P001
SA182 - F304
1/4" thick x 0.812" OD

4. Flange 919D610P001 (719E474)
SA182 - F304
3.37" thick x 8 5/8" OD

5. Base 137C5311P001
SA182 - F304
7/8" thick x 2.875" dia.

6. Ring Flange 114B5122P002, P003
137C8151P001, P002
SA182 - F304
1" thick x 5.6" OD x 1.75" ID

7. Cap Screw 117C4516P002
SA193 - B6
6 ea. 1/2" dia. on 4 1/8" bolt circle

8. Plug 175A7961P001
SA182 - F304
0.38" thick x 1.307" dia.

9. Nut 137C5834P001
XM - 19 SA479
1.30" thick x 2.62" dia.

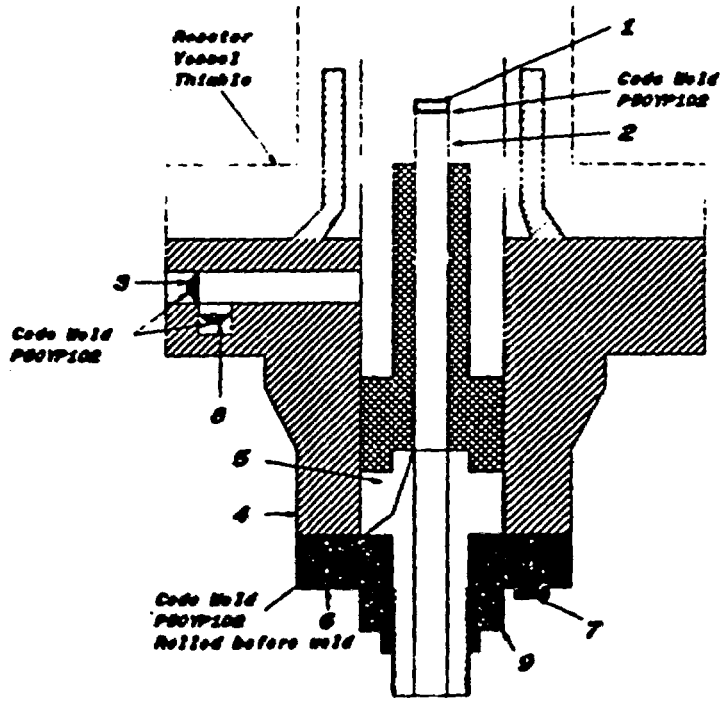

7200 1496

C01690

FORM N-2 NPT CERTIFICATE HOLDERS' DATA REPORT FOR NUCLEAR PART AND APPURTENANCES*

As required by the Provision of the ASME Code Rules, Section III, Div. I

1 Manufactured & Certified by General Electric Company Nuclear Energy (GE-NE)

3901 Castle Hayne Road, Wilmington, North Carolina 28401

(Name and Address of NPT Certificate Holder)

(b) Manufactured for TVA DECATUR, AL 35609-2000

(Name and Address of N Certificate Holder for completed nuclear component)

2 Identification - Certificate Holder's S/N or Part : A3469 Nat'l Bd. No. N/A

(a) Constructed According to Drawing No. 768E534G008 Rev 9 Dwg. Prepared by D.L. Peterson

(b) Description of Part Inspected Control Rod Drive, Model # 7RDB144FG005

(c) Applicable ASME Code Section III, Edition 1974, Addenda Date W75, Case No. N207 1361-2 Class 1

3 REMARKS Standard part for use with Reactor. Hydrostatically tested at 1825 psi min

(Brief description of service for which component was designed)

Sheet 1 of 2

We certify that the statements in this report are correct and this vessel part or appurtenance as defined in the code conforms to the rules of construction of the ASME Code Section III. (The applicable Designed Specification and Stress Report are not the responsibility of the NPT Certificate Holder for parts. An NPT Certification Holder for appurtenances is responsible for furnishing a separate Design Specification and Stress Report if the appurtenance is not included in the component Design Specification and Stress Report)

Date 10/08/96 Signed GE-NE By [signature]

(NPT Certificate Holder) (SC QA Representive)

Certificate of Authorization Expires. 6/16/99 Certification of Authorization No. : NPT N-1151

Certification of Design for Appurtenance

Design information on file at GE Company, San Jose, California

Stress analysis report on file at GE Company, San Jose, California

DC22A6253 Rev. 2
Design specification certified by B.N Sridhar Prof Eng State Calif. Reg. No 18345

DC22A6254 Rev 1
Stress analysis report certified by Edward Yoshio Prof. Eng State Calif. Reg No M018646

Certification of Shop Inspection

I, the undersigned, holding a valid commission by the National Board of Boiler and Pressure Inspectors and/or the State or Province of North Carolina and employed by Department of Labor of State of North Carolina have inspected the part of a pressure vessel described in this Partial Data Report on 5/10, 1992 and state that to the best of my knowledge and belief, the NPT Certificate Holder has constructed this part in accordance with the ASME Code Section III.

By signing this certificate, neither the Inspector nor his employer makes any warranty, expressed or implied, concerning the part described in the Partial Data Report. Furthermore, neither the Inspector nor his employer shall be liable in any manner for any personal injury or property damages or a loss of any kind arising from or connected with this inspection.

10/8, 1996 [signature] NC 1231, Ohio WC 3686 PA

Date Inspector's Signature National Board, State, Province And No.

*Supplemental sheets in form of lists, sketches or drawing may be used provided (1) size is 8-1/2" x 11", (2) information in 1-2 on this Data Report is included on each sheet, and (3) each sheet is numbered and number of sheets is recorded in Item 3. "REMARKS".

(07/90)

7200 1797

FORM U-2 (back) 001696

Items 4-8 Incl. to be completed for single wall vessels, jacketed vessels, or shells of heat exchangers.

4 Shell: Material _____ T.S. _____ Nominal Thickness ___ in. Corrosion Allowance ___ in. Dia. ___ ft. ___ in. Length ___ ft. ___
(Kind & Spec. No.) (Min. of Range Specified)

5. Seams: Long _____ N.T.[1] _____ R.T. _____ Efficiency _____%

Girth _____ N.T.[1] _____ R.T. _____ No. of Courses _____

6. Heads: (a) Material _____ T.S. _____ (b) Material _____ T.S. _____

	Location (Top Bottom, Ends)	Thickness	Crown Radius	Knuckle Radius	Elliptical Ratio	Conical Apex Angle	Hemispherical Radius	Flat Diameter	Side to Press. (conv. or conc.)
(a)									
(b)									

If removable, bolts used _____ (Material, Spec. No., T.S. Size Number) Other fastening _____ (Describe or attach sketch)

7. Jacket Closure: _____
(Describe as agree and weld, bar, etc. If bar give dimensions, if welds, describe or sketch)

Drop Weight _____
Charpy Impact _____ ft-lb

8. Design pressure[2] 1250 psi at 575 °F at temp of _____ °F

Items 9 and 10 to be completed for tube sections

9. Tube Sheets: Stationary. Material _____ (Kind & Spec. No.) Dia. _____ (Subject to pressure) Thickness ___ in. Attachment _____ (Welded, Rolled)

Floating. Material _____ Dia. _____ Thickness ___ in. Attachment _____

10. Tubes: Material _____ O.D. _____ in. Thickness _____ (Gauge or gage) Number _____ Type _____ (Str. or U)

Items 11 - 14 incl. to be completed for inner chambers of jacketed vessels, or channels of heat exchangers.

11. Shell: Material _____ T.S. _____ Nominal Thickness ___ in. Corrosion Allowance ___ in. Dia. ___ ft. ___ in. Length ___ ft. ___
(Kind & Spec. No.) (Min. of Range Specified)

12. Seams: Long _____ N.T.[1] _____ R.T. _____ Efficiency _____%

Girth _____ N.T.[1] _____ R.T. _____ No. of Courses _____

13. Heads: (a) Material _____ T.S. _____ (b) Material _____ T.S. _____

	Location	Thickness	Crown Radius	Knuckle Radius	Elliptical Ratio	Conical Apex Angle	Hemispherical Radius	Flat Diameter	Side to Press. (conv. or conc.)
(a)	Top, bottom, ends								
(b)	Channel								

If removable, bolts used (a)_____ (b)_____ (c)_____ Other fastening _____ (Describe or attach sketch)

Drop Weight _____
Charpy Impact _____ ft-lb

14. Design pressure[2] _____ psi at _____ °F at temp of _____ °F

Items below to be completed for all vessels where applicable.

15. Safety Valve Outlets: Number _____ Size _____ Location _____

16. Nozzles:

Purpose (Inlet, Outlet, Drain)	Number	Dia. or Size	Type	Material	Thickness	Reinforcement Material	How Attached

17. Inspection Openings: Manholes, No. _____ Size _____ Location _____
Handholes, No. _____ Size _____ Location _____
Threaded, No. _____ Size _____ Location _____

18. Supports: Skirt _____ (Yes or No) Lugs _____ (Number) Legs _____ (Number) Other _____ (Describe) Attached _____ (Where & How)

1 - If Postweld Heat Treated.
2 - List other internal or external pressure with coincident temperature when applicable.

7200.1798

FORM N-2 NPT CERTIFICATE HOLDERS' DATA REPORT FOR NUCLEAR PART AND APPURTENANCES*
As required by the Provision of the ASME Code Rules, Section III, Div. I

001697

1. Manufactured & Certified by : General Electric Company Nuclear Energy (GE-NE).
3901 Castle Hayne Road, Wilmington, North Carolina 28401
(Name and Address of NPT Certificate Holder)

(b) Manufactured for : TVA DECATUR, AL 35609-2000
(Name and Address of N Certificate Holder for completed nuclear component)

2. Identification - Certificate Holder's S/N of Part : A3489 Nat'l Bd. No. N/A

(a) Constructed According to Drawing No: 768E534G008 Rev. 9 Dwg. Prepared by P. L. Peterson

(b) Description of Part Inspected: Control Rod Drive, Model # TRDB144FC

(c) Applicable ASME Code: Section III, Edition 1974, Addenda Date W75, Case No. N207 1361-2 Class 1

3. REMARKS: Standard part for use with Reactor. Hydrostatically tested at 1825 psi, min.
(Brief description of service for which component was designed)

Sheet 2 of 2

1. Cap 166B6274P001
SA182 - F316
3/8" thick x 1 1/16" OD

2. Indicator Tube 166B6313P001
SA312 - TP316
3/4" sch 40 - seamless pipe
0.113" wall thickness
1.065" max. dia.

3. Plug 159A1178P001
SA182 - F304
1/4" thick x 0.812" OD

4. Flange 119D610P001 (719E474)
SA182 - F304
2.37" thick x 8 5/8" OD

5. Base 137C5311P001
SA182 - F304
7/8" thick x 2.875" dia.

6. Ring Flange 114B5122P002, P003
137C8151P001, P002
SA182 - F304
1" thick x 5.6" OD x 1.75" ID

7. Cap Screw 117C4516P002
SA193 - B6
6 ea. 1/2" dia. on 4 1/8" bolt circle

8. Plug 175A7861P001
SA182 - F304
0.38" thick x 1.307" dia.

9. Nut 137C5834P001
XM - 19 SA479
1.30" thick x 2.62" dia.

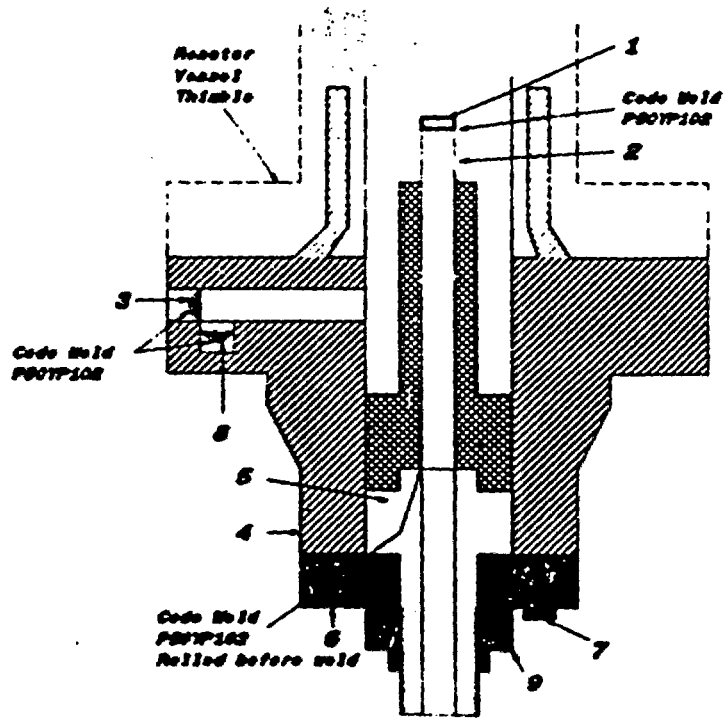

7200: 1799

001922

FORM N-2 NPT CERTIFICATE HOLDERS' DATA REPORT FOR NUCLEAR PART AND APPURTENANCES*
As required by the Provision of the ASME Code Rules, Section III, Div. I

1 Manufactured & Certified by : General Electric Company Nuclear Energy (GE-NE)

3901 Castle Hayne Road, Wilmington, North Carolina 28401
(Name and Address of NPT Certificate Holder)

(b) Manufactured for : TVA DECATUR, AL 35609-2000
(Name and Address of N Certificate Holder for completed nuclear component)

2 Identification - Certificate Holder's S/N of Part : A3989 Nat'l Bd. No. N/A

(a) Constructed According to Drawing No: 768E534G008 Rev 9 Dwg. Prepared by D. L. Peterson

(b) Description of Part Inspected: Control Rod Drive, Model # 7RD8144FG005

(c) Applicable ASME Code: Section III , Edition 1974 . Addenda Date W75 . Case No. N207 1361-2 Class 1

3 REMARKS: Standard part for use with Reactor. Hydrostatically tested at 1825 psi. min.
(Brief description of service for which component was designed)

Sheet 1 of 2

We certify that the statements in this report are correct and this vessel part or appurtenance as defined in the code conforms to the rules of construction of the ASME Code Section III. (The applicable Designed Specification and Stress Report are not the responsibility of the NPT Certificate Holder for parts. An NPT Certification Holder for appurtenances is responsible for furnishing a separate Design Specification and Stress Report if the appurtenance is not included in the component Design Specification and Stress Report).

Date: 10/08/96 Signed GE-NE (NPT Certificate Holder) By [signature] (SC QA Representative)

Certificate of Authorization Expires: 6/16/99 Certification of Authorization No. : NPT N-1151

Certification of Design for Appurtenance

Design information on file at GE Company, San Jose, California

Stress analysis report on file at GE Company, San Jose, California

DC22A6253 Rev. 2
Design specification certified by B.N. Sridhar Prof. Eng. State Calif. Reg. No. 18345

DC22A6254 Rev 1
Stress analysis report certified by Edward Yoshio Prof. Eng. State Calif. Reg. No. M018648

Certification of Shop Inspection

I, the undersigned, holding a valid commission by the National Board of Boiler and Pressure Inspectors and/or the State or Province of North Carolina and employed by Department of Labor of State of North Carolina have inspected the part of a pressure vessel described in this Partial Data Report on 5/17, 1996, and state that to the best of my knowledge and belief, the NPT Certificate Holder has constructed this part in accordance with the ASME Code Section III.
By signing this certificate, neither the Inspector nor his employer makes any warranty, expressed or implied, concerning the part described in the Partial Data Report. Furthermore, neither the Inspector nor his employer shall be liable in any manner for any personal injury or property damages or a loss of any kind arising from or connected with this inspection.

10/8, 1996 [signature] NC 1231, Ohio WC 3686 PA
Date Inspector's Signature National Board, State, Province And No.

*Supplemental sheets in form of lists, sketches or drawing may be used provided (1) size is 8-1/2" x 11", (2) information in 1-2 on this Data Report is included on each sheet, and (3) each sheet is numbered and number of sheets is recorded in Item 3. "REMARKS".

(07/96)

7000120074

001923

FORM N-2 (back)

Items 4-8 incl. to be completed for single wall vessels, jackets vessels, or shells of heat exchangers.

4. Shell: Material _____ T.S. _____ Nominal Thickness ___ in. Corrosion Allowance ___ in. Dia. ___ ft. ___ in. Length ___ ft. ___
(Kind & Spec. No.) (Min. of Range Specified)

5. Seams: Long _____ H.T.[1] _____ R.T. _____ Efficiency _____ %
Girth _____ H.T.[1] _____ R.T. _____ No. of Courses _____

6. Heads: (a) Material _____ T.S. _____ (b) Material _____ T.S. _____

	Location (Top Bottom, Ends)	Thickness	Crown Radius	Knuckle Radius	Elliptical Ratio	Conical Apex Angle	Hemispherical Radius	Flat Diameter	Side to Press. (conv. or conc.)
(a)	_____	_____	_____	_____	_____	_____	_____	_____	_____
(b)	_____	_____	_____	_____	_____	_____	_____	_____	_____

If removable, bolts used _____ (Material, Spec. No., T.S. Size Number) Other Fastening _____ (Describe or attach sketch)

7. Jacket Closure: _____
(Describe as signe and weld, bar, etc. If bar give dimensions, if bolts, describe or sketch)
Drop Weight _____
Charpy Impact _____ ft-lb

8. Design pressure[2] _____ 1250 _____ psi at _____ 575 _____ °F at temp of _____ °F

Items 9 and 10 to be completed for tube sections

9. Tube Sheets: Stationary Material _____ (Kind & Spec. No.) Dia. _____ (Subject to pressure) Thickness ___ in. Attachment _____ (Welded, Rolled)
Floating. Material _____ Dia. _____ Thickness ___ in. Attachment _____

10. Tubes: Material _____ O.D. _____ in. Thickness _____ Inches or gage. Number _____ Type _____ (Str. or U)

Items 11 - 14 incl. to be completed for inner chambers of jacketed vessels, or channels of heat exchangers.

11. Shell: Material _____ T.S. _____ Nominal Thickness ___ in. Corrosion Allowance ___ in. Dia. ___ ft. ___ in. Length ___ ft. ___
(Kind & Spec. No.) (Min. of Range Specified)

12. Seams: Long _____ H.T.[1] _____ R.T. _____ Efficiency _____ %
Girth _____ H.T.[1] _____ R.T. _____ No. of Courses _____

13. Heads: (a) Material _____ T.S. _____ (b) Material _____ T.S. _____

	Location	Thickness	Crown Radius	Knuckle Radius	Elliptical Ratio	Conical Apex Angle	Hemispherical Radius	Flat Diameter	Side to Press. (conv. or conc.)
(a)	Top, bottom, ends	_____	_____	_____	_____	_____	_____	_____	_____
(b)	Channel	_____	_____	_____	_____	_____	_____	_____	_____

If removable, bolts used (a) _____ (b) _____ (c) _____ Other Fastening _____ (Describe or attach sketch)
Drop Weight _____
Charpy Impact _____ ft-lb

14. Design pressure[2] _____ psi at _____ °F at temp of _____ °F

Items below to be completed for all vessels where applicable.

15. Safety Valve Outlets: Number _____ Size _____ Location _____

16. Nozzles:

Purpose (Inlet, Outlet, Drain)	Number	Dia. or Size	Type	Material	Thickness	Reinforcement Material	How Attached
_____	_____	_____	_____	_____	_____	_____	_____
_____	_____	_____	_____	_____	_____	_____	_____
_____	_____	_____	_____	_____	_____	_____	_____

17. Inspection Openings: Manholes, No. _____ Size _____ Location _____
Handholes, No. _____ Size _____ Location _____
Threaded, No. _____ Size _____ Location _____

18. Supports: Skirt _____ (Yes or No) Lugs _____ (Number) Legs _____ (Number) Other _____ (Describe) Attached _____ (Where & How)

1 - If Postweld Heat Treated.
2 - List other internal or external pressure with corresponding temperature when applicable.

FORM N-2 NPT CERTIFICATE HOLDERS' DATA REPORT FOR NUCLEAR PART AND APPURTENANCES*
As required by the Provision of the ASME Code Rules, Section III, Div. I

001924

1. Manufactured & Certified by : General Electric Company Nuclear Energy (GE-NE)
3901 Castle Hayne Road, Wilmington, North Carolina 28401
(Name and Address of NPT Certificate Holder)

(b) Manufactured for : TVA DECATUR, AL 35609-2000
(Name and Address of N Certificate Holder for completed nuclear component)

2. Identification - Certificate Holder's S/N of Part : A3969 Nat'l Bd. No. N/A

(a) Constructed According to Drawing No: 768E534G008 Rev 9 Dwg. Prepared by D. L. Peterson

(b) Description of Part Inspected: Control Rod Drive, Model # 7RD8144FG005

(c) Applicable ASME Code: Section III , Edition 1974 , Addenda Date W75 , Case No. N207 1361-2 Class 1

3. REMARKS: Standard part for use with Reactor. Hydrostatically tested at 1825 psi, min.
(Brief description of service for which component was designed)

Sheet 2 of 2

1. Cap 166B0274P001
SA182 - F316
3/8" thick x 1 1/16" OD

2. Indicator Tube 166B9313P001
SA312 - TP316
3/4" sch 40 - seamless pipe
0.113" wall thickness
1.065" max. dia.

3. Plug 159A1178P001
SA182 - F304
1/4" thick x 0.812" OD

4. Flange 919D610P001 (719E474)
SA182 - F304
3.37" thick x 9 5/8" OD

5. Base 137C5311P001
SA182 - F304
7/8" thick x 2.875" dia.

6. Ring Flange 114B5122P002, P003
137C8151P001, P002
SA182 - F304
1" thick x 5.8" OD x 1.75" ID

7. Cap Screw 117C4516P002
SA193 - B8
6 ea. 1/2" dia. on 4 1/8" bolt circle

8. Plug 175A7981P001
SA182 - F304
0.38" thick x 1.307" dia.

9. Nut 137C5834P001
XM - 19 SA479
1.30" thick x 2.62" dia.

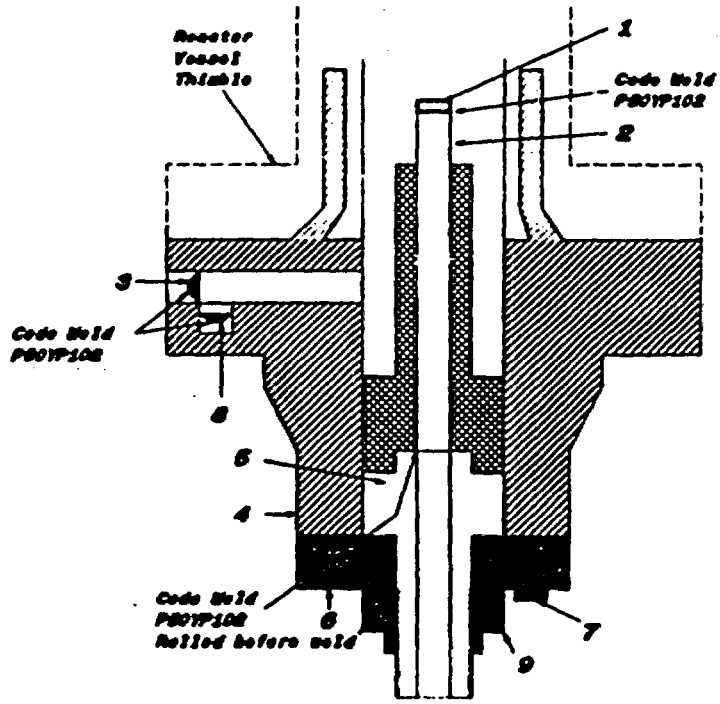

7200 7026

FORM N-2 NPT CERTIFICATE HOLDERS' DATA REPORT FOR NUCLEAR PART AND APPURTENANCES*
As required by the Provision of the ASME Code Rules, Section III, Div. I

CC2649

1. Manufactured & Certified by: General Electric Company Nuclear Energy (GE-NE)
3901 Castle Hayne Road, Wilmington, North Carolina 28401
(Name and Address of NPT Certificate Holder)

(b) Manufactured for: TVA DECATUR, AL 35609-2000
(Name and Address of N Certificate Holder for completed nuclear component)

2 Identification - Certificate Holder's S/N of Part: A5239 Nat'l Bd. No. N/A

(a) Constructed According to Drawing No: 768E534G008 Rev 8 Dwg. Prepared by D. L. Peterson

(b) Description of Part Inspected: Control Rod Drive, Model # 7RDB144FG005

(c) Applicable ASME Code: Section III, Edition 1974, Addenda Date W75, Case No. N207 1361-2 Class 1

3 REMARKS: Standard part for use with Reactor. Hydrostatically tested at 1825 psi. min.
(Brief description of service for which component was designed)

Sheet 1 of 2

We certify that the statements in this report are correct and this vessel part or appurtenance as defined in the code conforms to the rules of construction of the ASME Code Section III. (The applicable Designed Specification and Stress Report are not the responsibility of the NPT Certificate Holder for parts. An NPT Certification Holder for appurtenances is responsible for furnishing a separate Design Specification and Stress Report if the appurtenance is not included in the component Design Specification and Stress Report).

Date 10/08/96 Signed GE-NE (NPT Certificate Holder) By [signature] (SC QA Representive)

Certificate of Authorization Expires 6/16/99 Certification of Authorization No.: NPT N-1151

Certification of Design for Appurtenance

Design information on file at GE Company, San Jose, California

Stress analysis report on file at GE Company, San Jose, California

DC22A6253 Rev 2
Design specification certified by B.N. Sridhar Prof. Eng. State Calif. Reg. No. 18345

DC22A6254 Rev 1
Stress analysis report certified by Edward Yoshio Prof. Eng. State Calif. Reg. No. M018646

Certification of Shop Inspection

I, the undersigned, holding a valid commission by the National Board of Boiler and Pressure Inspectors and/or the State or Province of North Carolina and employed by Department of Labor of State of North Carolina have inspected the part of a pressure vessel described in this Partial Data Report on 8/27, 1996, and state that to the best of my knowledge and belief, the NPT Certificate Holder has constructed this part in accordance with the ASME Code Section III.
By signing this certificate, neither the Inspector nor his employer makes any warranty, expressed or implied, concerning the part described in the Partial Data Report. Furthermore, neither the Inspector nor his employer shall be liable in any manner for any personal injury or property damages or a loss of any kind arising from or connected with this inspection.

Date	Inspector's Signature	NC 1231, Ohio, WC 3686 PA National Board, State, Province And No.

*Supplemental sheets in form of lists, sketches or drawing may be used provided (1) size is 8-1/2" x 11", (2) information in 1-2 on this Data Report is included on each sheet, and (3) each sheet is numbered and number of sheets is recorded in item 3. "REMARKS".

(07/88)

7200 2752

FORM N-2 NPT CERTIFICATE HOLDERS' DATA REPORT FOR NUCLEAR PART AND APPURTENANCES*
As required by the Provision of the ASME Code Rules, Section III, Div. I

1. Manufactured & Certified by : General Electric Company Nuclear Energy (GE-NE) 002650
3901 Castle Hayne Road, Wilmington, North Carolina 28401
(Name and Address of NPT Certificate Holder)

(b) Manufactured for : TVA DECATUR, AL 35609-2000
(Name and Address of N Certificate Holder for completed nuclear component)

2. Identification - Certificate Holder's S/N of Part : A5239 Nat'l Bd. No. N/A

(a) Constructed According to Drawing No: 768E534G008 Rev 9 Dwg. Prepared by D. L. Peterson

(b) Description of Part Inspected: Control Rod Drive, Model # 7RDB144FG005

(c) Applicable ASME Code: Section III , Edition 1974 , Addenda Date W75 , Case No. N207 1361-2 Class 1

3. REMARKS: Standard part for use with Reactor, hydrostatically tested at 1825 psi, min.
(Brief description of service for which component was designed)

Sheet 2 of 2

1. Cap 166B9274P001
SA182 - F316
3/8" thick x 1 1/16" OD

2. Indicator Tube 166B9313P001
SA312 - TP316
3/4" sch 40 - seamless pipe
0.113" wall thickness
1.065" max. dia.

3. Plug 159A1176P001
SA182 - F304
1/4" thick x 0.812" OD

4. Flange 819D610P001 (719E474)
SA182 - F304
3.37" thick x 8 5/8" OD

5. Base 137C5311P001
SA182 - F304
7/8" thick x 2.875" dia.

6. Ring Flange 114B5122P002, P003
137C8151P001, P002
SA182 - F304
1" thick x 5.0" OD x 1.75" ID

7. Cap Screw 117C4516P002
SA193 - B6
6 ea. 1/2" dia. on 4 1/8" bolt circle

8. Plug 175A7961P001
SA182 - F304
0.38" thick x 1.307" dia.

9. Nut 137C5934P001
XM - 19 SA479
1.30" thick x 2.62" dia.

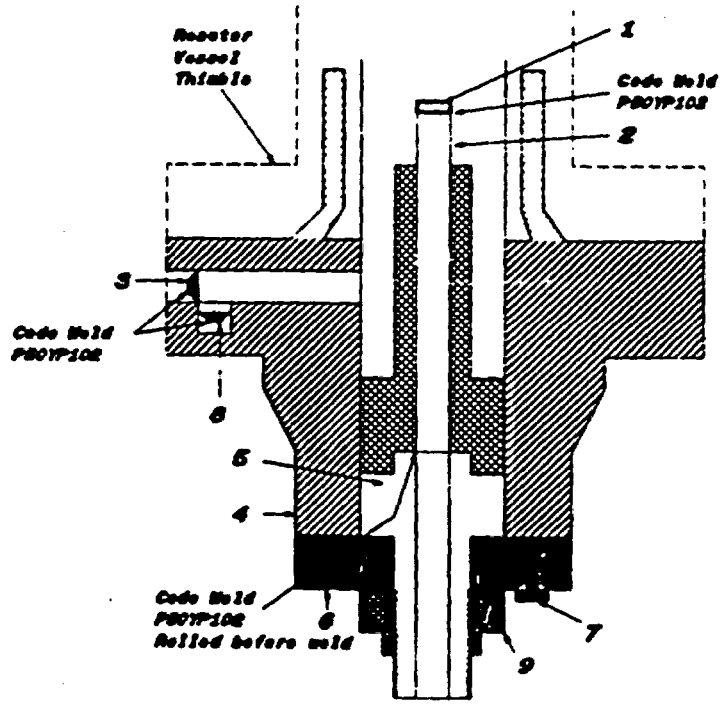

7200.2753

002505

FORM N-2 NPT CERTIFICATE HOLDERS' DATA REPORT FOR NUCLEAR PART AND APPURTENANCES*
As required by the Provision of the ASME Code Rules, Section III, Div. I

1 Manufactured & Certified by: General Electric Company Nuclear Energy (GE-NE)

3901 Castle Hayne Road, Wilmington, North Carolina 28401
(Name and Address of NPT Certificate Holder)

(b) Manufactured for: TVA DECATUR, AL 35609-2000
(Name and Address of N Certificate Holder for completed nuclear component)

2 Identification - Certificate Holder's S/N of Part: A4207 Nat'l Bd. No. N/A

(a) Constructed According to Drawing No: 768E534G008 Rev 9 Dwg. Prepared by D. L. Peterson

(b) Description of Part Inspected: Control Rod Drive, Model # 7RDB144FG005

(c) Applicable ASME Code: Section III, Edition 1974, Addenda Date W75, Case No. N207 1361-2 Class 1

3 REMARKS: Standard part for use with Reactor. Hydrostatically tested at 1825 psi, min.
(Brief description of service for which component was designed)

Sheet 1 of 2

We certify that the statements in this report are correct and this vessel part or appurtenance as defined in the code conforms to the rules of construction of the ASME Code Section III. (The applicable Designed Specification and Stress Report are not the responsibility of the NPT Certificate Holder for parts. An NPT Certification Holder for appurtenances is responsible for furnishing a separate Design Specification and Stress Report if the appurtenance is not included in the component Design Specification and Stress Report).

Date 10/08/96 Signed GE-NE (NPT Certificate Holder) By C Boyett (SC QA Representive)

Certificate of Authorization Expires: 6/16/99 Certification of Authorization No.: NPT N-1151

Certification of Design for Appurtenance

Design information on file at GE Company, San Jose, California

Stress analysis report on file at GE Company, San Jose, California

DC22A5253 Rev. 2
Design specification certified by B.N. Sridhar Prof. Eng. State Calif. Reg. No. 18345

DC22A6254 Rev 1
Stress analysis report certified by Edward Yoshio Prof. Eng. State Calif. Reg. No. M018646

Certification of Shop Inspection

I, the undersigned, holding a valid commission by the National Board of Boiler and Pressure Inspectors and/or the State or Province of North Carolina and employed by Department of Labor of State of North Carolina have inspected the part of a pressure vessel described in this Partial Data Report on 2/27, 1996, and state that to the best of my knowledge and belief, the NPT Certificate Holder has constructed this part in accordance with the ASME Code Section III.
By signing this certificate, neither the Inspector nor his employer makes any warranty, expressed or implied, concerning the part described in the Partial Data Report. Furthermore, neither the Inspector nor his employer shall be liable in any manner for any personal injury or property damages or a loss of any kind arising from or connected with this inspection.

10/8, 1996 Jerome P Ewen NC 1231, Ohio, WC 3688 PA
Date Inspector's Signature National Board, State, Province And No.

*Supplemental sheets in form of lists, sketches or drawing may be used provided (1) size is 8-1/2" x 11", (2) information in 1-2 on this Data Report is included on each sheet, and (3) each sheet is numbered and number of sheets is recorded in Item 3. "REMARKS".

(07.00)

7998 2197

FORM M-2 (back)

Items 4-8 incl to be completed for single wall vessels, jackets vessels, or shells of heat exchangers.

4. Shell: Material _____ T.S. _____ Nominal Thickness ___ in. Corrosion Allowance ___ in. Dia. ___ ft. ___ in. Length ___ ft. ___
(Kind & Spec. No.) (Min. of Range Specified)

5. Seams: Long _____ H.T.[1] _____ R.T. _____ Efficiency _____%
Girth _____ H.T.[1] _____ R.T. _____ No. of Courses _____

6. Heads: (a) Material _____ T.S. _____ (b) Material _____ T.S. _____

	Location (Top Bottom, Ends)	Thickness	Crown Radius	Knuckle Radius	Elliptical Ratio	Conical Apex Angle	Hemispherical Radius	Flat Diameter	Side to Press. (conv. or conc.)
(a)									
(b)									

If removable, bolts used _____ (Material, Spec. No., T.S. Size Number) Other Fastening _____ (Describe or attach sketch)

7. Jacket Closure: _____
(Describe as ogee and weld, bar, etc. If bar give dimensions, if bolts, describe or sketch)

Drop Weight _____
Charpy Impact _____ ft-lb

8. Design pressure[2] _____1250_____ psi at _____575_____ °F at temp of _____ °F

Items 9 and 10 to be completed for tube sections

9. Tube Sheets: Stationary. Material _____ (Kind & Spec. No.) Dia. _____ (Subject to pressure) Thickness ___ in. Attachment _____ (Welded, Bolted)
Floating. Material _____ Dia. _____ Thickness ___ in. Attachment _____

10. Tubes: Material _____ O.D. ___ in. Thickness _____ inches or gage. Number _____ Type _____ (Str. or U)

Items 11 - 14 incl. to be completed for inner chambers of jacketed vessels, or channels of heat exchangers.

11. Shell: Material _____ T.S. _____ Nominal Thickness ___ in. Corrosion Allowance ___ in. Dia. ___ ft. ___ in. Length ___ ft. ___
(Kind & Spec. No.) (Min. of Range Specified)

12. Seams: Long _____ H.T.[1] _____ R.T. _____ Efficiency _____%
Girth _____ H.T.[1] _____ R.T. _____ No. of Courses _____

13. Heads: (a) Material _____ T.S. _____ (b) Material _____ T.S. _____

	Location	Thickness	Crown Radius	Knuckle Radius	Elliptical Ratio	Conical Apex Angle	Hemispherical Radius	Flat Diameter	Side to Press. (conv. or conc.)
(a)	Top, bottom, ends								
(b)	Channel								

If removable, bolts used (a)_____ (b)_____ (c)_____ Other Fastening _____ (Describe or attach sketch)

Drop Weight _____
Charpy Impact _____ ft-lb

14. Design pressure[2] _____ psi at _____ °F at temp of _____ °F

Items below to be completed for all vessels where applicable.

15. Safety Valve Outlets: Number _____ Size _____ Location _____

16. Nozzles:

Purpose (Inlet, Outlet, Drain)	Number	Dia. or Size	Type	Material	Thickness	Reinforcement Material	How Attached

17. Inspection Openings: Manholes, No. _____ Size _____ Location _____
Handholes, No. _____ Size _____ Location _____
Threaded, No. _____ Size _____ Location _____

18. Supports: Skirt _____ (Yes or No) Lugs _____ (Number) Legs _____ (Number) Other _____ (Describe) Attached _____ (Where & How)

1. If Postweld Heat Treated
2. List other internal or external pressure with corresponding temperature when applicable.

FORM N-2 NPT CERTIFICATE HOLDERS' DATA REPORT FOR NUCLEAR PART AND APPURTENANCES*
As required by the Provision of the ASME Code Rules, Section III, Div. I

1. Manufactured & Certified by : General Electric Company Nuclear Energy (GE-NE) 002007
3901 Castle Hayne Road, Wilmington, North Carolina 28401
(Name and Address of NPT Certificate Holder)

(b) Manufactured for : TVA DECATUR, AL 35609-2000
(Name and Address of N Certificate Holder for completed nuclear component)

2. Identification - Certificate Holder's S/N of Part : A4207 Nat'l Bd. No. N/A

(a) Constructed According to Drawing No: 768E534G008 Rev 9 Dwg. Prepared by D. L. Peterson

(b) Description of Part Inspected: Control Rod Drive, Model # 7RDB144FG005

(c) Applicable ASME Code: Section III , Edition 1974 , Addenda Date W75 , Case No. N207 1361-2 Class 1

3 REMARKS: Standard part for use with Reactor. Hydrostatically tested at 1825 psi, min.
(Brief description of service for which component was designed)

Sheet 2 of 2

1. Cap 166B6274P001
SA182 - F316
3/8" thick x 1 1/16" OD

2. Indicator Tube 166B6313P001
SA312 - TP316
3/4" sch 40 - seamless pipe
0.113" wall thickness
1.065" max. dia.

3. Plug 159A1176P001
SA182 - F304
1/4" thick x 0.812" OD

4. Flange 919D610P001 (719E474)
SA182 - F304
3.37" thick x 8 5/8" OD

5. Base 137C5311P001
SA182 - F304
7/8" thick x 2.875" dia.

6. Ring Flange 114B3122P002, P003
137C8151P001, P002
SA182 - F304
1" thick x 5.0" OD x 1.75" ID

7. Cap Screw 117C4516P002
SA193 - B6
6 ea. 1/2" dia. on 4 1/8" bolt circle

8. Plug 175A7081P001
SA182 - F304
0.38" thick x 1.307" dia.

9. Nut 137C5634P001
304 - 19 SA479
1.30" thick x 2.62" dia.

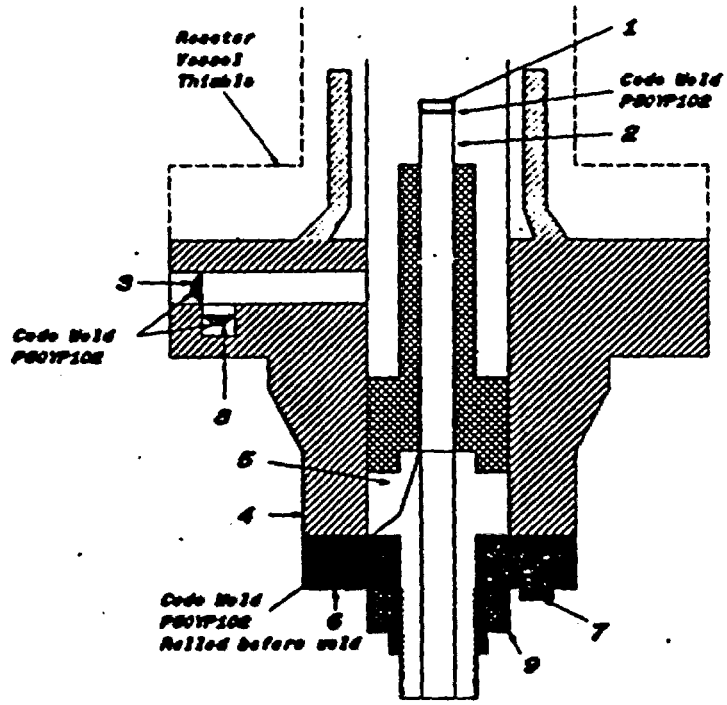

7708 2109

FORM N-2 NPT CERTIFICATE HOLDERS' DATA REPORT FOR NUCLEAR PART AND APPURTENANCES*
As required by the Provision of the ASME Code Rules, Section III, Div. I

001530

1 Manufactured & Certified by General Electric Company Nuclear Energy (GE-NE)

3901 Castle Hayne Road, Wilmington, North Carolina 28401
(Name and Address of NPT Certificate Holder)

(b) Manufactured for : TVA DECATUR, AL 35609-2000
(Name and Address of N Certificate Holder for completed nuclear component)

2 Identification - Certificate Holder's S/N of Part : A3135 Nat'l Bd. No. N/A

(a) Constructed According to Drawing No. 768E534G008 Rev 9 Dwg. Prepared by D. L. Peterson

(b) Description of Part Inspected. Control Rod Drive, Model # 7RDB144FG005

(c) Applicable ASME Code Section III , Edition 1974 , Addenda Date W75 , Case No N207 1361-2 , Class 1

3 REMARKS Standard part for use with Reactor Hydrostatically tested at 1825 psi min.
(Brief description of service for which component was designed)

Sheet 1 of 2

We certify that the statements in this report are correct and this vessel part or appurtenance as defined in the code conforms to the rules of construction of the ASME Code Section III (The applicable Designed Specification and Stress Report are not the responsibility of the NPT Certificate Holder for parts. An NPT Certification Holder for appurtenances is responsible for furnishing a separate Design Specification and Stress Report if the appurtenance is not included in the component Design Specification and Stress Report).

Date 10/08/96 Signed GE-NE By C L Bryant
(NPT Certificate Holder) (NC QA Representative)

Certificate of Authorization Expires 6/16/99 Certification of Authorization No. : NPT N - 1151

Certification of Design for Appurtenance

Design information on file at GE Company, San Jose, California

Stress analysis report on file at GE Company, San Jose, California

DC22A6253 Rev 2
Design specification certified by B N. Sridhar Prof. Eng. State Calif. Reg No. 18345

DC22A6254 Rev 1
Stress analysis report certified by Edward Yoshio Prof. Eng. State Calif. Reg No M018646

Certification of Shop Inspection

I, the undersigned, holding a valid commission by the National Board of Boiler and Pressure Inspectors and/or the State or Province of North Carolina and employed by Department of Labor of State of North Carolina have inspected the part of a pressure vessel described in this Partial Data Report on 3/12, 1996, and state that to the best of my knowledge and belief, the NPT Certificate Holder has constructed this part in accordance with the ASME Code Section III.
By signing this certificate, neither the Inspector nor his employer makes any warranty, expressed or implied, concerning the part described in the Partial Data Report. Furthermore, neither the Inspector nor his employer shall be liable in any manner for any personal injury or property damages or a loss of any kind arising from or connected with this Inspection.

10/8, 1996 Jerome P Crew NC 1231, Ohio, WC 2686 PA
Date Inspector's Signature National Board, State, Province And No.

*Supplemental sheets in form of lists, sketches or drawing may be used provided (1) size is 8-1/2" x 11", (2) information in 1-2 on this Data Report is included on each sheet, and (3) each sheet is numbered and number of sheets is recorded in item 3. "REMARKS".

(07/88)

7508 1633

FORM N-2 NPT CERTIFICATE HOLDERS' DATA REPORT FOR NUCLEAR PART AND APPURTENANCES*
As required by the Provision of the ASME Code Rules, Section III, Div. I

001531

1. Manufactured & Certified by : General Electric Company Nuclear Energy (GE-NE)
3901 Castle Hayne Road, Wilmington, North Carolina 28401
(Name and Address of NPT Certificate Holder)

(b) Manufactured for : TVA DECATUR, AL 35609-2000
(Name and Address of N Certificate Holder for completed nuclear component)

2. Identification - Certificate Holder's S/N of Part : A*135 Nat'l Bd. No. N/A

(a) Constructed According to Drawing No: 768E534(* Rev 9 Dwg. Prepared by D. L. Peterson

(b) Description of Part Inspected: Control Rod Drive, Model # 7RDB144FG005

(c) Applicable ASME Code: Section III , Edition 1974 , Addenda Date W75 , Case No. N207 1361-2 Class 1

3. REMARKS: Standard part for use with Reactor. Hydrostatically tested at 1825 psi, min.
(Brief description of service for which component was designed)

Sheet 2 of 2

1. Cap 1A6B9274P001
SA182 - F316
3/8" thick x 1 1/16" OD

2. Indicator Tube 1C6B9313P001
SA312 - TP316
3/4" sch 40 - seamless pipe
0.113" wall thickness
1.065" max. dia.

3. Plug 139A1176P001
SA182 - F304
1/4" thick x 0.812" OD

4. Flange 819D610P001 (719E474)
SA182 - F304
3.37" thick x 8 5/8" OD

5. Base 137C5311P001
SA182 - F304
7/8" thick x 2.875" dia.

6. Ring Flange 114B5122P002, P003
137C8151P001, P002
SA182 - F304
1" thick x 5.0" OD x 1.75" ID

7. Cap Screw 117C4516P002
SA193 - B6
6 req. 1/2" dia. on 4 1/8" bolt circle

8. Plug 175A7061P001
SA182 - F304
0.38" thick x 1.307" dia.

9. Nut 137C5834P001
XM - 19 SA479
1.30" thick x 2.62" dia.

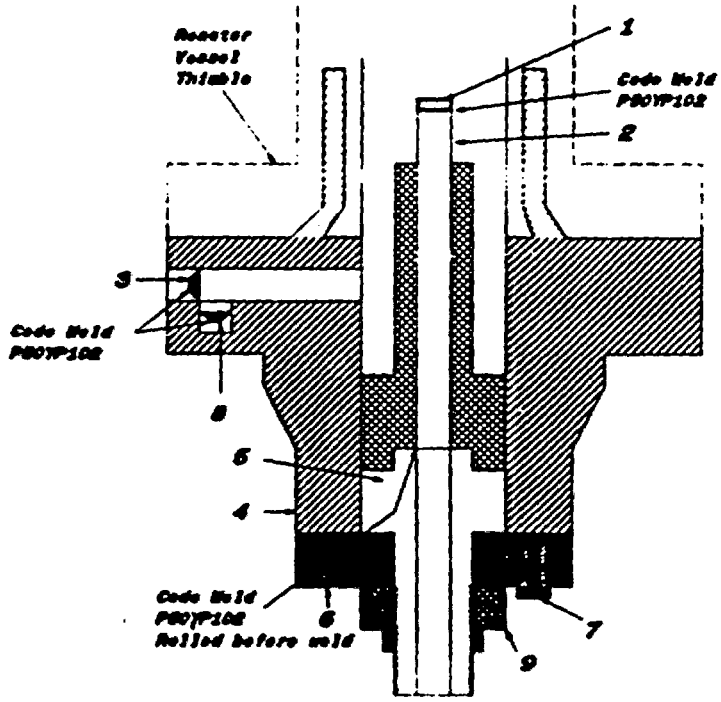

7288 1633

001950

FORM N-2 NPT CERTIFICATE HOLDERS' DATA REPORT FOR NUCLEAR PART AND APPURTENANCES*

As required by the Provision of the ASME Code Rules, Section III, Div. I

1 Manufactured & Certified by General Electric Company Nuclear Energy (GE-NE)

3901 Castle Hayne Road, Wilmington, North Carolina 28401

(Name and Address of NPT Certificate Holder)

(b) Manufactured for TVA DECATUR, AL 35609-2000

(Name and Address of N Certificate Holder for completed nuclear component)

2 Identification - Certificate Holder's S/N of Part : A4065 Nat'l Bd. No. N/A

(a) Constructed According to Drawing No: 768E534G008 Rev 9 Dwg. Prepared by D. L. Peterson

(b) Description of Part Inspected: Control Rod Drive, Model # 7RDB144FG005

(c) Applicable ASME Code Section III , Edition 1974 , Addenda Date W75 , Case No. N207 1361-2 Class 1

3 REMARKS Standard part for use with Reactor. Hydrostatically tested at 1825 psi, min.

(Brief description of service for which component was designed)

Sheet 1 of 2

we certify that the statements in this report are correct and this vessel part or appurtenance as defined in the code conforms to the rules of construction of the ASME Code Section III. (The applicable Designed Specification and Stress Report are not the responsibility of the NPT Certificate Holder for parts. An NPT Certification Holder for appurtenances is responsible for furnishing a separate Design Specification and Stress Report if the appurtenance is not included in the component Design Specification and Stress Report).

Date 10/08/96 Signed GE-NE By [signature]

(NPT Certificate Holder) (NC QA Representive)

Certificate of Authorization Expires: 6/16/99 Certification of Authorization No. : NPT N - 1151

Certification of Design for Appurtenance

Design information on file at GE Company, San Jose, California

Stress analysis report on file at GE Company, San Jose, California

DC22A6253 Rev. 2
Design specification certified by B.N. Sridhar Prof. Eng State Calif. Reg. No 18345

DC22A6254 Rev 1
Stress analysis report certified by Edward Yoshio Prof. Eng. State Calif. Reg. No. M018646

Certification of Shop Inspection

I, the undersigned, holding a valid commission by the National Board of Boiler and Pressure Inspectors and/or the State or Province of North Carolina and employed by Department of Labor of State of North Carolina have inspected the part of a pressure vessel described in this Partial Data Report on 3/8, 1996, and state that to the best of my knowledge and belief, the NPT Certificate Holder has constructed this part in accordance with the ASME Code Section III.

By signing this certificate, neither the Inspector nor his employer makes any warranty, expressed or implied, concerning the part described in the Partial Data Report. Furthermore, neither the Inspector nor his employer shall be liable in any manner for any personal injury or property damages or a loss of any kind arising from or connected with this Inspection.

10/8, 1996 [signature] NC 1231, Ohio WC 3688 PA

Date Inspector's Signature National Board, State, Province And No.

*Supplemental sheets in form of lists, sketches or drawing may be used provided (1) size is 8-1/2" x 11", (2) information in 1-2 on this Data Report is included on each sheet, and (3) each sheet is numbered and number of sheets is recorded in Item 3. "REMARKS".

(07/90)

2288 2052

001951

FORM N-2 (back)

Items 4-8 incl to be completed for single wall vessels, jackets vessels, or shells of heat exchangers.

4 Shell Material _____ T.S. _____ Nominal Thickness ___ in. Corrosion Allowance ___ in. Dia. ___ ft. ___ in. Length ___ ft. ___
(Kind & Spec. No.) (Min. of Range Specified)

5. Seams: Long _____ H.T.[1] _____ R.T. _____ Efficiency _____ %
Girth _____ H.T.[1] _____ R.T. _____ No. of Courses _____

6. Heads: (a) Material _____ T.S. _____ (b) Material _____ T.S. _____

	Location (Top Bottom, Ends)	Thickness	Crown Radius	Knuckle Radius	Elliptical Ratio	Conical Apex Angle	Hemispherical Radius	Flat Diameter	Side to Press. (conv. or conc.)
(a)									
(b)									

If removable, bolts used _____ (Material, Spec. No., T.S. Size Number) Other fastening _____ (Describe or attach sketch)

7. Jacket Closure: _____
(Describe as agree and weld, bar, etc. If bar give dimensions, if bolts, describe or sketch)

Drop Weight _____
Charpy Impact _____ ft-lb

8. Design pressure[2] 1250 psi at 575 °F at temp of _____ °F

Items 9 and 10 to be completed for tube sections

9. Tube Sheets: Stationary. Material _____ (Kind & Spec. No.) Dia. _____ (Subject to pressure) Thickness ___ in. Attachment _____ (Welded, Bolted)
Floating. Material _____ Dia. _____ Thickness ___ in. Attachment _____

10. Tubes: Material _____ O.D. _____ in. Thickness _____ inches or gage. Number _____ Type _____ (Str. or U)

Items 11 - 14 incl. to be completed for inner chambers of jacketed vessels, or channels of heat exchangers.

11. Shell: Material _____ T.S. _____ Nominal Thickness ___ in. Corrosion Allowance ___ in. Dia. ___ ft. ___ in. Length ___ ft. ___
(Kind & Spec. No.) (Min. of Range Specified)

12. Seams: Long _____ H.T.[1] _____ R.T. _____ Efficiency _____ %
Girth _____ H.T.[1] _____ R.T. _____ No. of Courses _____

13. Heads: (a) Material _____ T.S. _____ (b) Material _____ T.S. _____

	Location	Thickness	Crown Radius	Knuckle Radius	Elliptical Ratio	Conical Apex Angle	Hemispherical Radius	Flat Diameter	Side to Press. (conv. or conc.)
(a)	Top, bottom, ends								
(b)	Channel								

If removable, bolts used (a)_____ (b)_____ (c)_____ Other fastening _____ (Describe or attach sketch)

Drop Weight _____
Charpy Impact _____ ft-lb

14. Design pressure[2] _____ psi at _____ °F at temp of _____ °F

Items below to be completed for all vessels where applicable.

15. Safety Valve Outlets: Number _____ Size _____ Location _____

16. Nozzles:

Purpose (Inlet, Outlet, Drain)	Number	Dia. or Size	Type	Material	Thickness	Reinforcement Material	How Attached

17. Inspection Openings: Manholes, No. _____ Size _____ Location _____
Handholes, No. _____ Size _____ Location _____
Threaded, No. _____ Size _____ Location _____

18 Supports: Skirt _____ (Yes or No) Lugs _____ (Number) Legs _____ (Number) Other _____ (Describe) Attached _____ (Where & How)

1 If Postweld Heat Treated.
2 List either internal or external pressure with corresponding temperature when applicable.

7200.2053

FORM N-2 NPT CERTIFICATE HOLDERS' DATA REPORT FOR NUCLEAR PART AND APPURTENANCES*
As required by the Provision of the ASME Code Rules, Section III, Div. I

001952

1. Manufactured & Certified by : General Electric Company Nuclear Energy (GE-NE)
3901 Castle Hayne Road, Wilmington, North Carolina 28401
(Name and Address of NPT Certificate Holder)

(b) Manufactured for : TVA DECATUR, AL 35609-2000
(Name and Address of N Certificate Holder for completed nuclear component)

2. Identification - Certificate Holder's S/N of Part : A4055 Nat'l Bd. No. N/A

(a) Constructed According to Drawing No: 768E534G008 Rev 9 Dwg. Prepared by D. L. Peterson

(b) Description of Part Inspected: Control Rod Drive, Model # 7RDB144FG005

(c) Applicable ASME Code: Section III , Edition 1974 , Addenda Date W75 , Case No. N207 1361-2 Class 1

3. REMARKS. Standard part for use with Reactor. Hydrostatically tested at 1825 psi. min.
(Brief description of service for which component was designed)

Sheet 2 of 2

1. Cap 166B9274P001
SA182 - F316
3/8" thick x 1 1/16" OD

2. Indicator Tube 166B9313P001
SA312 - TP316
3/4" sch 40 - seamless pipe
0.113" wall thickness
1.065" max. dia.

3. Plug 150A1178P001
SA182 - F304
1/4" thick x 0.812" OD

4. Flange 819D610P001 (719E474)
SA182 - F304
3.37" thick x 9 5/8" OD

5. Base 137C5311P001
SA182 - F304
7/8" thick x 2.875" dia.

6. Ring Flange 114B5122P002, P003
137C8151P001, P002
SA182 - F304
1" thick x 5.0" OD x 1.75" ID

7. Cap Screw 117C4516P002
SA193 - B6
6 ea. 1/2" dia. on 4 1/8" bolt circle

8. Plug 175A7961P001
SA182 - F304
0.38" thick x 1.307" dia.

9. Nut 137C5934P001
XM - 19 SA479
1.30" thick x 2.62" dia.

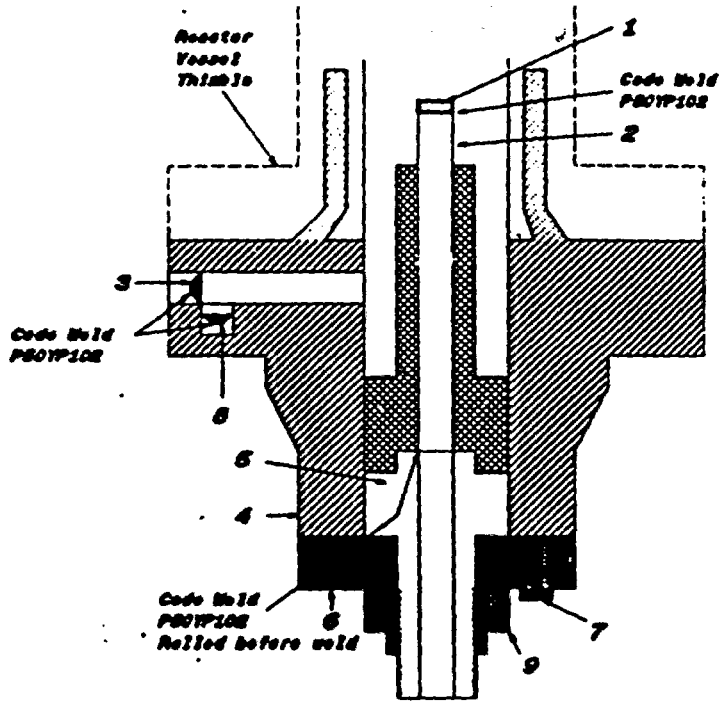

7299.2954

002061

FORM N-2 NPT CERTIFICATE HOLDERS' DATA REPORT FOR NUCLEAR PART AND APPURTENANCES*
As required by the Provision of the ASME Code Rules, Section III, Div. I

1 Manufactured & Certified by : General Electric Company Nuclear Energy (GE-NE)

3901 Castle Hayne Road, Wilmington, North Carolina 28401
(Name and Address of NPT Certificate Holder)

(b) Manufactured for · TVA DECATUR, AL 35609-2000
(Name and Address of N Certificate Holder for completed nuclear component)

2 Identification - Certificate Holder's S/N of Part : A4274 Nat'l Bd. No. N/A

(a) Constructed According to Drawing No: 768E534G008 Rev 9 Dwg. Prepared by D.L. Peterson

(b) Description of Part Inspected: Control Rod Drive, Model # 7RDB144FG005

(c) Applicable ASME Code: Section III . Edition 1974 . Addenda Date W75 . Case No. N207 1361-2 Class 1

3 REMARKS: Standard part for use with Reactor. Hydrostatically tested at 1825 psi. min.
(Brief description of service for which component was designed)

Sheet 1 of 2

We certify that the statements in this report are correct and this vessel part or appurtenance as defined in the code conforms to the rules of construction of the ASME Code Section III. (The applicable Designed Specification and Stress Report are not the responsibility of the NPT Certificate Holder for parts. An NPT Certification Holder for appurtenances is responsible for furnishing a separate Design Specification and Stress Report if the appurtenance is not included in the component Design Specification and Stress Report).

Date: 10/08/96 Signed GE-NE (NPT Certificate Holder) By [signature] (SC QA Representive)

Certificate of Authorization Expires: 6/16/99 Certification of Authorization No. : NPT N-1151

Certification of Design for Appurtenance

Design information on file at GE Company, San Jose, California

Stress analysis report on file at GE Company, San Jose, California

DC22A6253 Rev. 2
Design specification certified by B.N. Sridhar Prof. Eng. State Calif. Reg. No. 18345

DC22A6254 Rev 1
Stress analysis report certified by Edward Yoshio Prof. Eng. State Calif. Reg. No. M018646

Certification of Shop Inspection

I, the undersigned, holding a valid commission by the National Board of Boiler and Pressure Inspectors and/or the State or Province of North Carolina and employed by Department of Labor of State of North Carolina have inspected the part of a pressure vessel described in this Partial Data Report on 9/27, 1996, and state that to the best of my knowledge and belief, the NPT Certificate Holder has constructed this part in accordance with the ASME Code Section III.
By signing this certificate, neither the Inspector nor his employer makes any warranty, expressed or implied, concerning the part described in the Partial Data Report. Furthermore, neither the Inspector nor his employer shall be liable in any manner for any personal injury or property damages or a loss of any kind arising from or connected with this inspection.

10/8, 1996 [signature] NC 1231, Ohio, WC 3686 PA
Date Inspector's Signature National Board, State, Province And No.

*Supplemental sheets in form of lists, sketches or drawing may be used provided (1) size is 8-1/2" x 11", (2) information in 1-2 on this Data Report is included on each sheet, and (3) each sheet is numbered and number of sheets is recorded in Item 3. "REMARKS".

(07/00)

7290 2163

FORM N-2 (back)

Items 4-8 incl. to be completed for single wall vessels, jackets vessels, or shells of heat exchangers.

4. Shell Material _____ T.S. _____ Nominal Thickness ___ in. Corrosion Allowance ___ in. Dia. ___ ft. ___ in. Length ___ ft. ___
(Kind & Spec. No.) (Min. of Range Specified)

5. Seams Long _____ N.T.[1] _____ R.T. _____ Efficiency _____%
Girth _____ N.T.[1] _____ R.T. _____ No. of Courses _____

6. Heads: (a) Material _____ T.S. _____ (b) Material _____ T.S. _____

	Location (Top Bottom, Ends)	Thickness	Crown Radius	Knuckle Radius	Elliptical Ratio	Concial Apex Angle	Hemispherical Radius	Flat Diameter	Side to Press. (conv. or conc.)
(a)									
(b)									

If removable, bolts used _____ (Material, Spec. No., T.S. Size Number) Other fastening _____ (Describe or attach sketch)

7. Jacket Closure: _____
(Describe as open end weld, bar, etc. If bar give dimensions, if bolts, describe or sketch)

Drop Weight _____
Charpy Impact _____ ft-lb

8. Design pressure[2] 1250 psi at 575 °F at temp of _____ °F

Items 9 and 10 to be completed for tube sections

9. Tube Sheets: Stationary. Material _____ (Kind & Spec. No.) Dia. _____ (Subject to pressure) Thickness ___ in. Attachment _____ (Welded, Rolled)
Floating. Material _____ Dia. _____ Thickness ___ in. Attachment _____

10. Tubes: Material _____ O.D. _____ in. Thickness _____ inches or gage. Number _____ Type _____ (Str. or U)

Items 11 - 14 incl. to be completed for inner chambers of jacketed vessels, or channels of heat exchangers.

11. Shell Material _____ T.S. _____ Nominal Thickness ___ in. Corrosion Allowance ___ in. Dia. ___ ft. ___ in. Length ___ ft. ___
(Kind & Spec. No.) (Min. of Range Specified)

12. Seams Long _____ N.T.[1] _____ R.T. _____ Efficiency _____%
Girth _____ N.T.[1] _____ R.T. _____ No. of Courses _____

13. Heads (a) Material _____ T.S. _____ (b) Material _____ T.S. _____

	Location	Thickness	Crown Radius	Knuckle Radius	Elliptical Ratio	Concial Apex Angle	Hemispherical Radius	Flat Diameter	Side to Press. (conv. or conc.)
(a)	Top.bottom.ends								
(b)	Channel								

If removable, bolts used (a)_____ (b)_____ (c)_____ Other fastening _____ (Describe or attach sketch)

Drop Weight _____
Charpy Impact _____ ft-lb

14. Design pressure[2] _____ psi at _____ °F at temp of _____ °F

Items below to be completed for all vessels where applicable.

15. Safety Valve Outlets: Number _____ Size _____ Location _____

16. Nozzles:

Purpose (Inlet, Outlet, Drain)	Number	Dia. or Size	Type	Material	Thickness	Reinforcement Material	How Attached

17. Inspection Openings: Manholes, No. _____ Size _____ Location _____
Handholes, No. _____ Size _____ Location _____
Threaded, No. _____ Size _____ Location _____

18. Supports: Skirt _____ (Yes or No) Lugs _____ (Number) Legs _____ (Number) Other _____ (Describe) Attached _____ (Where & How)

1. If Postweld Heat Treated.
2. List other internal or external pressure with corresponding temperature when applicable.

7288 2164

FORM N-2 NPT CERTIFICATE HOLDERS' DATA REPORT FOR NUCLEAR PART AND APPURTENANCES*
As required by the Provision of the ASME Code Rules, Section III, Div. I

1. Manufactured & Certified by : General Electric Company Nuclear Energy (GE-NE) 002062

3901 Castle Hayne Road, Wilmington, North Carolina 28401
(Name and Address of NPT Certificate Holder)

(b) Manufactured for : TVA DECATUR, AL 35609-2000
(Name and Address of N Certificate Holder for completed nuclear component)

2. Identification - Certificate Holder's S/N of Part : A4274 Nat'l Bd. No. N/A

(a) Constructed According to Drawing No: 768E534G008 Rev 9 Dwg. Prepared by D. L. Peterson

(b) Description of Part Inspected: Control Rod Drive, Model # 7RDB144FG005

(c) Applicable ASME Code: Section III , Edition 1974 , Addenda Date W75 , Case No. N207 1361-2 Class 1

3. REMARKS: Standard part for use with Reactor. Hydrostatically tested at 1825 psi, min.
(Brief description of service for which component was designed)

Sheet 2 of 2

1. Cap 166B6274P001
SA182 - F316
3/8" thick x 1 1/16" OD

2. Indicator Tube 166B0313P001
SA312 - TP316
3/4" sch 40 - seamless pipe
0.113" wall thickness
1.065" max. dia.

3. Plug 159A1176P001
SA182 - F304
1/4" thick x 0.812" OD

4. Flange 819D610P001 (719E474)
SA182 - F304
3.37" thick x 8 5/8" OD

5. Base 137C5311P001
SA182 - F304
7/8" thick x 2.875" dia.

6. Ring Flange 114B5122P002, P003
137C8151P001, P002
SA182 - F304
1" thick x 5.0" OD x 1.75" ID

7. Cap Screw 117C4516P002
SA193 - B6
8 ea. 1/2" dia. on 4 1/8" bolt circle

8. Plug 175A7961P001
SA182 - F304
0.38" thick x 1.307" dia.

9. Nut 137C5834P001
XM - 19 SA479
1.30" thick x 2.62" dia.

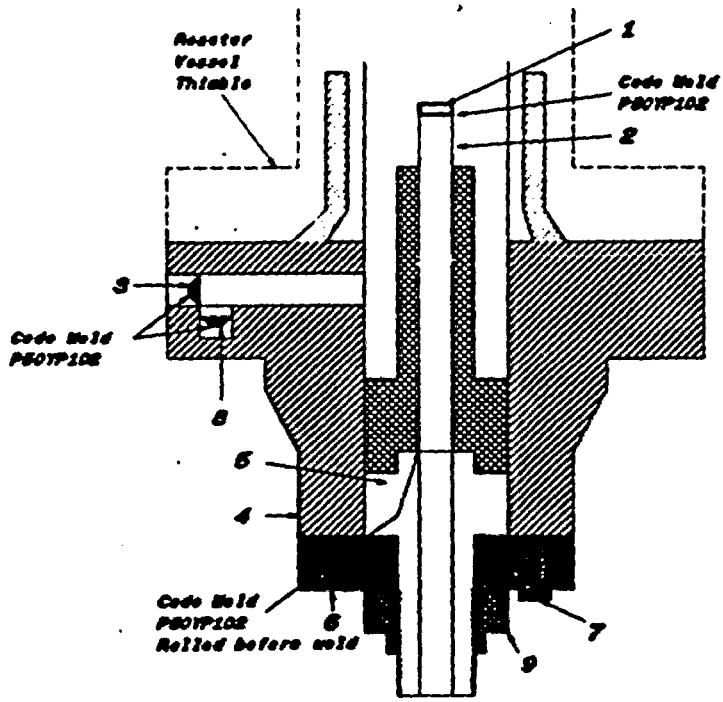

7200 2165

002200

FORM N-2 NPT CERTIFICATE HOLDERS' DATA REPORT FOR NUCLEAR PART AND APPURTENANCES*
As required by the Provision of the ASME Code Rules, Section III, Div. I

1 Manufactured & Certified by : General Electric Company Nuclear Energy (GE-NE)

3901 Castle Hayne Road, Wilmington, North Carolina 28401
(Name and Address of NPT Certificate Holder)

(b) Manufactured for : TVA DECATUR, AL 35609-2000
(Name and Address of N Certificate Holder for completed nuclear component)

2 Identification - Certificate Holder's S/N of Part : A4421 Nat'l Bd. No. N/A

(a) Constructed According to Drawing No: 768E534G208 Rev 9 Dwg. Prepared by D. L. Peterson

(b) Description of Part Inspected: Control Rod Drive, Model # 7RDB144FG005

(c) Applicable ASME Code: Section III , Edition 1974 , Addenda Date W75 . Case No N207 136 1-2 Class 1

3 REMARKS: Standard part for use with Reactor. Hydrostatically tested at 1825 psi. min.
(Brief description of service for which component was designed)

Sheet 1 of 2

We certify that the statements in this report are correct and this vessel part or appurtenance as defined in the code conforms to the rules of construction of the ASME Code Section III (The applicable Designed Specification and Stress Report are not the responsibility of the NPT Certificate Holder for parts An NPT Certification Holder for appurtenances is responsible for furnishing a separate Design Specification and Stress Report if the appurtenance is not included in the component Design Specification and Stress Report).

Date 10/08/96 Signed GE-NE By
(NPT Certificate Holder) (SC QA Representive)

Certificate of Authorization Expires: 6/16/99 Certification of Authorization No. : NPT N - 1151

Certification of Design for Appurtenance

Design information on file at GE Company, San Jose, California

Stress analysis report on file at GE Company, San Jose, California

DC22A6253 Rev. 2
Design specification certified by B.N. Sridhar Prof Eng. State Calif. Reg No 18345

DC22A6254 Rev 1
Stress analysis report certified by Edward Yoshio Prof Eng. State Calif. Reg. No M018646

Certification of Shop Inspection

I, the undersigned, holding a valid commission by the National Board of Boiler and Pressure Inspectors and/or the State or Province of North Carolina and employed by Department of Labor of State of North Carolina have inspected the part of a pressure vessel described in this Partial Data Report on 2/23, 1996, and state that to the best of my knowledge and belief, the NPT Certificate Holder has constructed this part in accordance with the ASME Code Section III.
By signing this certificate, neither the Inspector nor his employer makes any warranty, expressed or implied, concerning the part described in the Partial Data Report. Furthermore, neither the Inspector nor his employer shall be liable in any manner for any personal injury or property damages or a loss of any kind arising from or connected with this inspection.

10/9, 1996 Jerome P Evans NC 1231, Ohio, WC 3686 PA
Date Inspector's Signature National Board, State, Province And No.

*Supplemental sheets in form of lists, sketches or drawing may be used provided (1) size is 8-1/2" x 11", (2) information in 1-2 on this Data Report is included on each sheet, and (3) each sheet is numbered and number of sheets is recorded in Item 3. "REMARKS".

(07/88)

7209 2303

G02201

FORM N-2 (back)

Items 4-8 incl to be completed for single wall vessels, jackets vessels, or shells of heat exchangers.

4 Shell Material _____ T.S. _____ Nominal Thickness ___ in. Corrosion Allowance ___ in. Dia. ___ ft. ___ in. Length ___ ft. ___ in.
(Kind & Spec. No.) (Min. of Range Specified)

5 Seams Long _____ N.T.[1] _____ R.T. _____ Efficiency _____%

Girth _____ N.T.[1] _____ R.T. _____ No. of Courses _____

6 Heads (a) Material _____ T.S. _____ (b) Material _____ T.S. _____

Location (Top Bottom, Ends)	Thickness	Crown Radius	Knuckle Radius	Elliptical Ratio	Concial Apex Angle	Hemispherical Radius	Flat Diameter	Side to Press. (conv. or conc.)
(a)								
(b)								

If removable, bolts used _____ (Material, Spec. No., T.S. Size Number) Other fastening _____ (Describe or attach sketch)

7 Jacket Closure: _____
(Describe as egee and weld, bar, etc. If bar give dimensions, if bolts, describe or sketch)

Drop Weight _____
Charpy Impact _____ ft-lb

8 Design pressure[2] _____1250_____ psi at _____575_____ °F at temp of _____ °F

Items 9 and 10 to be completed for tube sections

9 Tube Sheets: Stationary. Material _____ (Kind & Spec. No.) Dia. _____ (Subject to pressure) Thickness ___ in. Attachment _____ (Welded, Bolted)

Floating. Material _____ Dia. _____ Thickness ___ in. Attachment _____

10. Tubes: Material _____ O.D. _____ in. Thickness _____ inches or gage. Number _____ Type _____ (Str. or U)

Items 11 - 14 incl. to be completed for inner chambers of jacketed vessels, or channels of heat exchangers.

11. Shell: Material _____ T.S. _____ Nominal Thickness ___ in. Corrosion Allowance ___ in. Dia. ___ ft. ___ in. Length ___ ft. ___ in.
(Kind & Spec. No.) (Min. of Range Specified)

12. Seams: Long _____ N.T.[1] _____ R.T. _____ Efficiency _____%

Girth _____ N.T.[1] _____ R.T. _____ No. of Courses _____

13 Heads: (a) Material _____ T.S. _____ (b) Material _____ T.S. _____

Location	Thickness	Crown Radius	Knuckle Radius	Elliptical Ratio	Concial Apex Angle	Hemispherical Radius	Flat Diameter	Side to Press. (conv. or conc.)
(a) Top, bottom, ends								
(b) Channel								

If removable, bolts used (a)_____ (b)_____ (c)_____ Other fastening _____ (Describe or attach sketch)

Drop Weight _____
Charpy Impact _____ ft-lb

14. Design pressure[2] _____ psi at _____ °F at temp of _____ °F

Items below to be completed for all vessels where applicable.

15. Safety Valve Outlets: Number _____ Size _____ Location _____

16. Nozzles:

Purpose (Inlet, Outlet, Drain)	Number	Dia. or Size	Type	Material	Thickness	Reinforcement Material	How Attached

17. Inspection Openings: Manholes, No. _____ Size _____ Location _____
Handholes, No. _____ Size _____ Location _____
Threaded, No _____ Size _____ Location _____

18. Supports. Skirt _____ (Yes or No) Lugs _____ (Number) Legs _____ (Number) Other _____ (Describe) Attached _____ (Where & How)

1 - If Preheated Heat Treated.
2 - List other internal or external pressure with equivalent temperature when applicable

7299.2394

FORM N-2 NPT CERTIFICATE HOLDERS' DATA REPORT FOR NUCLEAR PART AND APPURTENANCES*
As required by the Provision of the ASME Code Rules, Section III, Div. I

1. Manufactured & Certified by : General Electric Company Nuclear Energy (GE-NE) 002202
3901 Castle Hayne Road, Wilmington, North Carolina 28401
(Name and Address of NPT Certificate Holder)

(b) Manufactured for : TVA DECATUR, AL 35609-2000
(Name and Address of N Certificate Holder for completed nuclear component)

2. Identification - Certificate Holder's S/N of Part : A4421 Nat'l Bd. No. N/A

(a) Constructed According to Drawing No: 768E534G008 Rev 0 Dwg. Prepared by D. L. Peterson

(b) Description of Part Inspected: Control Rod Drive, Model # 7RDB144FG005

(c) Applicable ASME Code: Section III , Edition 1974 , Addenda Date W75 , Case No. N207 1361-2 Class 1

3. REMARKS: Standard part for use with Reactor. Hydrostatically tested at 1825 psi, min.
(Brief description of service for which component was designed)

Sheet 2 of 2

1. Cap 166B9274P001
SA182 - F316
3/8" thick x 1 1/16" OD

2. Indicator Tube 166B9313P001
SA312 - TP316
3/4" sch 40 - seamless pipe
0.113" wall thickness
1.065" max. dia.

3. Plug 159A1176P001
SA182 - F304
1/4" thick x 0.812" OD

4. Flange 819D610P001 (719E474)
SA182 - F304
3.37" thick x 8 5/8" OD

5. Base 137C5311P001
SA182 - F304
7/8" thick x 2.875" dia.

6. Ring Flange 114B5122P002, P003
137C8151P001, P002
SA182 - F304
1" thick x 5.0" OD x 1.75" ID

7. Cap Screw 117C4516P002
SA193 - B6
6 ea. 1/2" dia. on 4 1/8" bolt circle

8. Plug 175A7561P001
SA182 - F304
0.38" thick x 1.307" dia.

9. Nut 137C5834P001
XM - 19 SA479
1.30" thick x 2.62" dia.

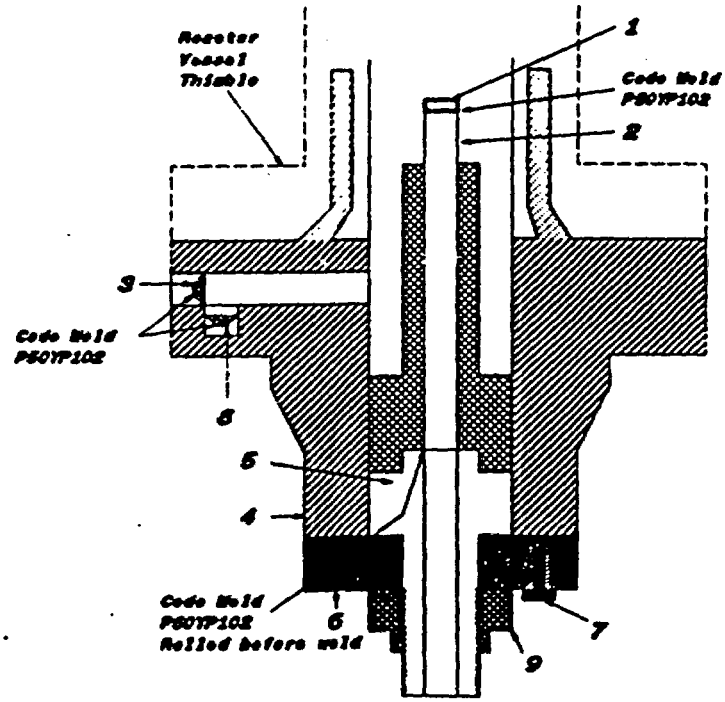

7299 2395

001640

FORM N-2 NPT CERTIFICATE HOLDERS' DATA REPORT FOR NUCLEAR PART AND APPURTENANCES*
As required by the Provision of the ASME Code Rules, Section III, Div. I

1. Manufactured & Certified by : General Electric Company Nuclear Energy (GE-NE)
3901 Castle Hayne Road, Wilmington, North Carolina 28401
(Name and Address of NPT Certificate Holder)

(b) Manufactured for : TVA DECATUR, AL 35609-2000
(Name and Address of N Certificate Holder for completed nuclear component)

2 Identification - Certificate Holder's S/N of Part : A3394 Nat'l Bd. No. N/A

(a) Constructed According to Drawing No: 768E534G008 Rev 9 Dwg. Prepared by D. L. Peterson

(b) Description of Part Inspected: Control Rod Drive, Model # TRDB144FG005

(c) Applicable ASME Code: Section III , Edition 1974 . Addenda Date W75 . Case No N207 1361-2 Class 1

3 REMARKS: Standard part for use with Reactor Hydrostatically tested at 1825 psi min.
(Brief description of service for which component was designed)

Sheet 1 of 2

We certify that the statements in this report are correct and this vessel part or appurtenance as defined in the code conforms to the rules of construction of the ASME Code Section III (The applicable Designed Specification and Stress Report are not the responsibility of the NPT Certificate Holder for parts An NPT Certification Holder for appurtenances is responsible for furnishing a separate Design Specification and Stress Report if the appurtenance is not included in the component Design Specification and Stress Report).

Date: 10/08/96 Signed GE-NE By [signature]
(NPT Certificate Holder) (SC QA Representive)

Certificate of Authorization Expires: 6/16/99 Certification of Authorization No. NPT N - 1151

Certification of Design for Appurtenance

Design information on file at GE Company, San Jose, California

Stress analysis report on file at GE Company, San Jose, California

DC22A6253 Rev. 2
Design specification certified by B.N. Sridhar Prof. Eng. State Calif. Reg. No. 18345

DC22A6254 Rev 1
Stress analysis report certified by Edward Yoshio Prof Eng. State Calif. Reg. No. M018646

Certification of Shop Inspection

I, the undersigned, holding a valid commission by the National Board of Boiler and Pressure Inspectors and/or the State or Province of North Carolina and employed by Department of Labor of State of North Carolina have inspected the part of a pressure vessel described in this Partial Data Report on 3/12, 1996, and state that to the best of my knowledge and belief, the NPT Certificate Holder has constructed this part in accordance with the ASME Code Section III.
By signing this certificate, neither the Inspector nor his employer makes any warranty, expressed or implied, concerning the part described in the Partial Data Report. Furthermore, neither the Inspector nor his employer shall be liable in any manner for any personal injury or property damages or a loss of any kind arising from or connected with this Inspection.

10/8, 1996 [signature] NC 1231, Ohio, WC 3686 PA
Date Inspector's Signature National Board, State, Province And No.

*Supplemental sheets in form of lists, sketches or drawing may be used provided (1) size is 8-1/2" x 11", (2) information in 1-2 on this Data Report is included on each sheet, and (3) each sheet is numbered and number of sheets is recorded in Item 3. "REMARKS".

(07/88)

7990 1742

FORM N-2 NPT CERTIFICATE HOLDERS' DATA REPORT FOR NUCLEAR PART AND APPURTENANCES*
As required by the Provision of the ASME Code Rules, Section III, Div. I

1. Manufactured & Certified by : General Electric Company Nuclear Energy (GE-NE) **001641**
3901 Castle Hayne Road, Wilmington, North Carolina 28401
(Name and Address of NPT Certificate Holder)

(b) Manufactured for : TVA DECATUR, AL 35609-2000
(Name and Address of N Certificate Holder for completed nuclear component)

2. Identification - Certificate Holder's S/N of Part : A3394 Nat'l Bd. No. N/A

(a) Constructed According to Drawing No: 768E534G008 Rev 9 Dwg. Prepared by D. L. Peterson

(b) Description of Part Inspected: Control Rod Drive, Model # 7RDB144FG005

(c) Applicable ASME Code: Section III , Edition 1974 , Addenda Date W75 , Case No. N207 1361-2 Class 1

3. REMARKS: Standard part for use with Reactor. Hydrostatically tested at 1825 psi, min.
(Brief description of service for which component was designed)

Sheet 2 of 2

1. Cap 166B9274P001
SA182 - F316
3/8" thick x 1 1/16" OD

2. Indicator Tube 166B9313P001
SA312 - TP316
3/4" sch 40 - seamless pipe
0.113" wall thickness
1.065" max. dia.

3. Plug 159A1178P001
SA182 - F304
1/4" thick x 0.812" OD

4. Flange 919D610P001 (719E474)
SA182 - F304
3.37" thick x 8 5/8" OD

5. Base 137C5311P001
SA182 - F304
7/8" thick x 2.875" dia.

6. Ring Flange 114B5122P002, P003
137C8151P001, P002
SA182 - F304
1" thick x 5.6" OD x 1.75" ID

7. Cap Screw 117C4518P002
SA193 - B6
6 ea. 1/2" dia. on 4 1/8" bolt circle

8. Plug 175A7961P001
SA182 - F304
0.38" thick x 1.307" dia.

9. Nut 137C5934P001
XM - 19 SA479
1.30" thick x 2.62" dia.

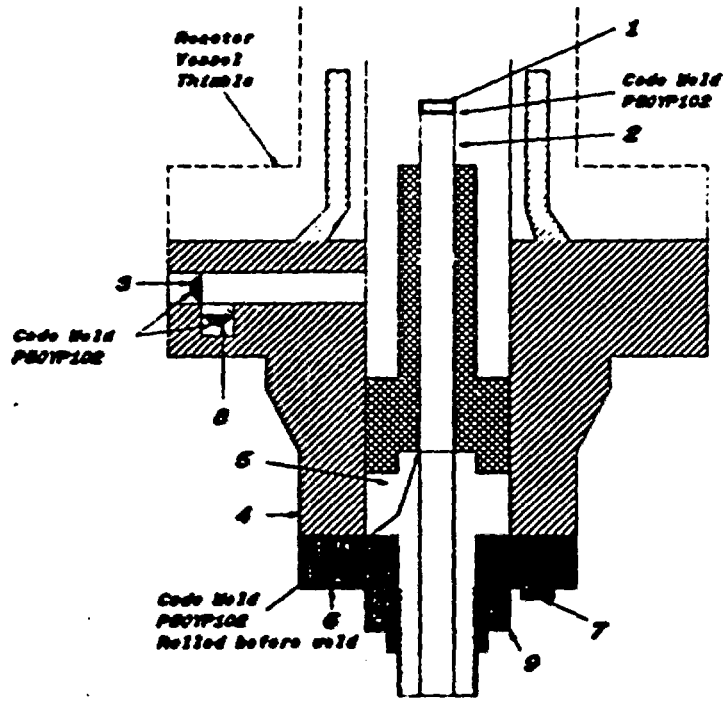

7299.1747

001585

FORM N-2 NPT CERTIFICATE HOLDERS' DATA REPORT FOR NUCLEAR PART AND APPURTENANCES*
As required by the Provision of the ASME Code Rules, Section III, Div. I

1. Manufactured & Certified by General Electric Company Nuclear Energy (GE-NE)
3901 Castle Hayne Road, Wilmington, North Carolina 28401
(Name and Address of NPT Certificate Holder)

1b. Manufactured for TVA DECATUR AL 35609-2000
(Name and Address of N Certificate Holder for completed nuclear component)

2. Identification - Certificate Holder's S/N of Part A3224 Nat'l Bd No N/A

2a. Constructed According to Drawing No 768E524G008 Rev 8 Dwg Prepared by D L Peterson

2b. Description of Part Inspected Control Rod Drive, Model # 7RDB144FG005

2c. Applicable ASME Code Section III, Edition 1974, Addenda Date W75, Case No N607 1361-2 Class 1

2d. Service Standard part for use with Reactor. Hydrostatically tested at 1825 psi min
Brief description of service for which component was designed

Sheet 1 of 2

We certify that the statements in this report are correct and this vessel part or appurtenance as defined in the code conforms to the rules of construction of the ASME Code Section III. (The applicable Designed Specification and Stress Report are not the responsibility of the NPT Certificate holder for parts. An NPT Certification Holder for appurtenances is responsible for furnishing a separate Design Specification and Stress Report if the appurtenance is not included in the component Design Specification and Stress Report.)

Date 10/08/96 Signed GE-NE By
(NPT Certificate Holder) (QC QA Representative)

Certificate of Authorization Expires 6/16/99 Certification of Authorization No NPT N-1151

Certification of Design for Appurtenance

Design information on file at GE Company, San Jose, California

Stress analysis report on file at GE Company, San Jose, California

DC22A6253 Rev 2
Design specification certified by B N Sridhar Prof Eng State Calif Reg No 18345

DC22A6254 Rev 1
Stress analysis report certified by Edward Yoshio Prof Eng State Calif Reg No M018646

Certification of Shop Inspection

I, the undersigned, holding a valid commission by the National Board of Boiler and Pressure Inspectors and/or the State or Province of North Carolina and employed by Department of Labor of State of North Carolina have inspected the part of a pressure vessel described in this Partial Data Report on 9/12, 1996, and state that to the best of my knowledge and belief, the NPT Certificate Holder has constructed this part in accordance with the ASME Code Section III.
By signing this certificate, neither the Inspector nor his employer makes any warranty, expressed or implied, concerning the part described in the Partial Data Report. Furthermore, neither the Inspector nor his employer shall be liable in any manner for any personal injury or property damages or a loss of any kind arising from or connected with this Inspection.

10/8, 1996 Inspector's Signature NC 1231, Ohio WC 3686 PA
Date National Board, State, Province And No

Supplemental sheets in form of lists, sketches or drawing may be used provided (1) size is 8-1/2" x 11", (2) information in 1-2 on this Data Report is included on each sheet, and (3) each sheet is numbered and number of sheets is recorded in Item 3. "REMARKS".

(07/90)

001586

FORM N-2 (back)

Items 4-8 Incl. to be completed for single wall vessels, jackets vessels, or shells of heat exchangers.

4. Shell Material _____ T.S. _____ Nominal Thickness ___ in. Corrosion Allowance ___ in. Dia. ___ ft. ___ in. Length ___ ft. ___
(Kind & Spec. No.) (Min. of Range Specified)

5. Seams Long _____ N.T.[1] _____ R.T. _____ Efficiency _____ %
Girth _____ N.T.[1] _____ R.T. _____ No. of Courses _____

6. Heads: (a) Material _____ T.S. _____ (b) Material _____ T.S. _____

Location (Top Bottom, Ends)	Thickness	Crown Radius	Knuckle Radius	Elliptical Ratio	Conical Apex Angle	Hemispherical Radius	Flat Diameter	Side to Press. (conv. or conc.)
(a)								
(b)								

If removable, bolts used _____ (Material, Spec. No., T.S. Size Number) Other fastening _____ (Describe or attach sketch)

7. Jacket Closure _____
(Describe as spin and weld, bar, etc. If bar give dimensions, if bolts, describe or sketch)

Drop Weight _____
Charpy Impact _____ ft-lb

8. Design pressure[2] _____1250_____ psi at _____575_____ °F at temp of _____ °F

Items 9 and 10 to be completed for tube sections

9. Tube Sheets Stationary Material _____ (Kind & Spec. No.) Dia. _____ (Subject to pressure) Thickness ___ in. Attachment _____ (Welded, Bolted)
Floating. Material _____ Dia _____ Thickness ___ in. Attachment _____

10. Tubes. Material _____ O.D. _____ in. Thickness _____ inches or gage. Number _____ Type _____ (Str or U)

Items 11 - 14 incl. to be completed for inner chambers of jacketed vessels, or channels of heat exchangers.

11. Shell: Material _____ T.S. _____ Nominal Thickness ___ in Corrosion Allowance ___ in. Dia. ___ ft. ___ in. Length ___ ft. ___
(Kind & Spec. No.) (Min. of Range Specified)

12. Seams: Long _____ N.T.[1] _____ R.T. _____ Efficiency _____ %
Girth _____ N.T.[1] _____ R.T. _____ No. of Courses _____

13. Heads: (a) Material _____ T.S. _____ (b) Material _____ T.S. _____

Location	Thickness	Crown Radius	Knuckle Radius	Elliptical Ratio	Conical Apex Angle	Hemispherical Radius	Flat Diameter	Side to Press. (conv. or conc.)
(a) Top, bottom, ends								
(b) Channel								

If removable, bolts used (a)_____(b)_____(c)_____ Other fastening _____ (Describe or attach sketch)

Drop Weight _____
Charpy Impact _____ ft-lb

14. Design pressure[2] _____ psi at _____ °F at temp of _____ °F

Items below to be completed for all vessels where applicable.

15. Safety Valve Outlets: Number _____ Size _____ Location _____

16. Nozzles:

Purpose (Inlet, Outlet, Drain)	Number	Dia. or Size	Type	Material	Thickness	Reinforcement Material	How Attached

17. Inspection Openings: Manholes, No. _____ Size _____ Location _____
Handholes, No. _____ Size _____ Location _____
Threaded, No _____ Size _____ Location _____

18. Supports: Skirt _____ (Yes or No) Lugs _____ (Number) Legs _____ (Number) Other _____ (Describe) Attached _____ (Where & How)

1 If Postweld Heat Treated
2 List other internal or external pressure with coincident temperature when applicable.

FORM N-2 NPT CERTIFICATE HOLDERS' DATA REPORT FOR NUCLEAR PART AND APPURTENANCES*
As required by the Provision of the ASME Code Rules, Section III, Div. I

1. Manufactured & Certified by : General Electric Company Nuclear Energy (GE-NE) **001587**
3901 Castle Hayne Road, Wilmington, North Carolina 28401
(Name and Address of NPT Certificate Holder)

(b) Manufactured for : TVA DECATUR, AL 35609-2000
(Name and Address of N Certificate Holder for completed nuclear component)

2. Identification - Certificate Holder's S/N of Part : A3224 Nat'l Bd. No. N/A

(a) Constructed According to Drawing No: 76BE534G008 Rev 8 Dwg. Prepared by D. L. Peterson

(b) Description of Part Inspected: Control Rod Drive, Model # 7BD8144FG005

(c) Applicable ASME Code: Section III , Edition 1974 , Addenda Date W75 , Case No. N207 1361-2 Class 1

3. REMARKS: Standard part for use with Reactor. Hydrostatically tested at 1825 psi. min.
(Brief description of service for which component was designed)

Sheet 2 of 2

1. Cap 166B9274P001
SA182 - F316
3/8" thick x 1 1/16" OD

2. Indicator Tube 166B9313P001
SA312 - TP316
3/4" sch 40 - seamless pipe
0.113" wall thickness
1.065" max. dia.

3. Plug 159A1176P001
SA182 - F304
1/4" thick x 0.812" OD

4. Flange 919D610P001 (719E474)
SA182 - F304
3.37" thick x 9 5/8" OD

5. Base 137C5311P001
SA182 - F304
7/8" thick x 2.875" dia.

6. Ring Flange 114B5122P002, P003
137C8151P001, P002
SA182 - F304
1" thick x 5.8" OD x 1.75" ID

7. Cap Screw 117C4516P002
SA193 - B8
6 req. 1/2" dia. on 4 1/8" bolt circle

8. Plug 175A7981P001
SA182 - F304
0.38" thick x 1.307" dia.

9. Nut 137C5834P001
XM - 19 SA479
1.30" thick x 2.62" dia.

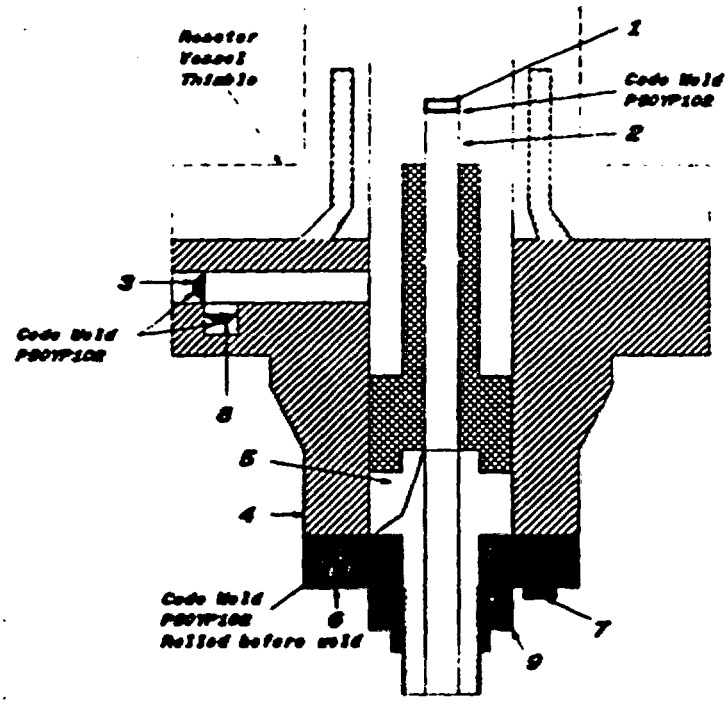

7000 1689

FORM NIS-2 OWNER'S REPORT FOR REPAIR/REPLACEMENT ACTIVITY

As Required by the Provisions of the ASME Code Section XI

1. Owner Tennessee Valley Authority (TVA) (Name)
   1101 Market Street
   Chattanooga, TN 37402-2801 (Address)

   Date April 30, 2003

   Sheet 1 of 1

2. Plant Browns Ferry Nuclear Plant (BFN) (Name)
   P. O. Box 2000, Decatur, AL 35609-2000 (Address)

   Unit 2

   Work Orders (WO) 03-004126-000 and 03-004119-000
   Repair/Replacement Organization P.O. No., Job No., etc.

3. Work Performed by TVA-BFN (Name)
   P. O. Box 2000, Decatur, AL 35609-2000 (Address)

   Type Code Symbol Stamp N/A
   Authorization No. N/A
   Expiration Date N/A

4. Identification of System System 001, Main Steam System (ASME Code Class 1 equivalent)

5. (a) Applicable Construction Code USAS B31.1.0 19 67 * Edition, N/A Addenda, N/A Code Case

   (b) Applicable Edition of Section XI Utilized for Repairs or Replacements 19 95 Edition, 1996 Addenda

6. Identification of Components

Name of Component	Name of Manufacturer	Manufacturer Serial No.	National Board No.	Other Identification	Year Built	Corrected, Removed, or Installed	ASME Code Stamped (Yes or No)
Support (Snubber) 2-47B400S0096	Bergen-Paterson	TVA Serial No. M0458	N/A	2-SNUB-001-5047	N/A	Removed	No
Support (Snubber) 2-47B400S0096	Bergen-Paterson	TVA Serial No. M0503	N/A	2-SNUB-001-5047	N/A	Installed	No

7. Description of Work Replaced snubber 2-SNUB-001-5047 with like for like rebuilt snubber.

8. Tests Conducted: Hydrostatic ☐ Pneumatic ☐ Nominal Operating Pressure ☐ Exempt ☐

   Other ☒** Pressure N/A psi Test Temp. N/A °F ** - See Remarks

NOTE: Supplemental Sheets in form of lists, sketches, or drawings may be used, provided (1) size is 8½ in. X 11 in., (2) information in items 1 through 6 on this report is included on each sheet, and (3) each sheet is numbered and the number of sheets is recorded at the top of this form.

*as amended by additional quality assurance requirements found in Contract 68C37-91602 and Design Criteria BFN-50-7001 and BFN-50-C-7105.

FORM NIS-2 (Back)

9. Remarks WO 03-004126-000 - (2-SNUB-001-5047) -

Applicable Manufacturer's Data Reports to be attached

The original snubber (TVA Serial No. M0458) was removed and stored in the snubber room as a spare due fluid leakage at threaded plug. The newly installed snubber (TVA Serial No. M0503) had been previously located in Unit 2 as 2-SNUB-074-5037 and was removed from Unit 2 under WO 03-004119-000. The new snubber (TVA Serial No. M0503) was rebuilt per MPI-0-000-SNB002, Hydraulic Shock and Sway Arrestor Bergen-Paterson Unit Disassembly and Reassembly, and functionally tested per 2-SI-4.6.H-2B, Functional Testing of Bergen-Paterson Snubbers, prior to installation at 2-SNUB-001-5047. M0503 had a new main cylinder tube installed as part of the rebuild.

CERTIFICATE OF COMPLIANCE

I certify that the statements made in the report are correct and this conforms to the rules of the ASME Code, Section XI.

Type Code Symbol Stamp N/A

Certificate of Authorization No. N/A Expiration Date N/A

Signed [signature], System Engineer Date 5/7, 20 03

Owner or Owner's Designee, Title

CERTIFICATE OF INSERVICE INSPECTION

I, the undersigned, holding a valid commission issued by the National Board of Boiler and Pressure Vessel Inspectors and the State or Province of Tennessee and employed by HSB CT of Connecticut have inspected the components described in this Owner's Report during the period 3.10.03 to 3.11.03, and state that to the best of my knowledge and belief, the Owner has performed examinations and taken corrective measures described in this Owner's Report in accordance with the requirements of the ASME Code, Section XI.

By signing this certificate neither the Inspector nor his employer makes any warranty, expressed or implied, concerning the examinations and corrective measures described in this Owner's Report. Furthermore, neither the Inspector nor his employer shall be liable in any manner for any personal injury or property damage or a loss of any kind arising from or connected with this inspection.

[signature] Commissions TN3135 A B I N NS

Inspector's Signature National Board, State, Province, and Endorsements

Date May 29 2003

FORM NIS-2 OWNER'S REPORT FOR REPAIR/REPLACEMENT ACTIVITY

As Required by the Provisions of the ASME Code Section XI

1. Owner Tennessee Valley Authority (TVA) — Name
   1101 Market Street
   Chattanooga, TN 37402-2801 — Address

   Date April 30, 2003

   Sheet 1 of 1

2. Plant Browns Ferry Nuclear Plant (BFN) — Name
   P. O. Box 2000, Decatur, AL 35609-2000 — Address

   Unit 2

   Work Orders (WO) 00-005306-000, 02-006771-000 and 02-007272-000 — Repair/Replacement Organization P.O. No., Job No., etc.

3. Work Performed by TVA-BFN — Name
   P. O. Box 2000, Decatur, AL 35609-2000 — Address

   Type Code Symbol Stamp N/A

   Authorization No. N/A

   Expiration Date N/A

4. Identification of System System 003, Feedwater System (ASME Code Class 1 equivalent)

5. (a) Applicable Construction Code USAS B31.1.0 19 67 * Edition, N/A Addenda, N/A Code Case

   (b) Applicable Edition of Section XI Utilized for Repairs or Replacements 19 95 Edition, 1996 Addenda

6. Identification of Components

Name of Component	Name of Manufacturer	Manufacturer Serial No.	National Board No.	Other Identification	Year Built	Corrected, Removed, or Installed	ASME Code Stamped (Yes or No)
Support (Snubber) 2-47B415S0001	Bergen-Paterson	TVA Serial No. M0440	N/A	2-SNUB-003-5015	N/A	Removed	No
Support (Snubber) 2-47B415S0001	Shaw A/DE	ADH-1000-3414	N/A	2-SNUB-003-5015	N/A	Installed	No
Support (Snubber) 2-47B415S0002	Bergen-Paterson	TVA Serial No. M0406	N/A	2-SNUB-003-5016	N/A	Removed	No
Support (Snubber) 2-47B415S0002	Shaw A/DE	ADH-1000-3416	N/A	2-SNUB-003-5016	N/A	Installed	No
Support (Snubber) 2-47B415S0009	Pacific Scientific	5535	N/A	2-SNUB-003-5023	N/A	Removed	No
Support (Snubber) 2-47B415S0009	Pacific Scientific	5501	N/A	2-SNUB-003-5023	N/A	Installed	No

7. Description of Work Replaced snubbers with like for like new snubbers.

8. Tests Conducted: Hydrostatic ☐ Pneumatic ☐ Nominal Operating Pressure ☐ Exempt ☐

   Other ☒** Pressure N/A psi Test Temp. N/A °F ** - See Remarks

NOTE: Supplemental Sheets in form of lists, sketches, or drawings may be used, provided (1) size is 8½ in. X 11 in., (2) information in items 1 through 6 on this report is included on each sheet, and (3) each sheet is numbered and the number of sheets is recorded at the top of this form.

*as amended by additional quality assurance requirements found in Contract 68C37-91602 and Design Criteria BFN-50-7003 and BFN-50-C-7105.

FORM NIS-2 (Back)

9. Remarks WO 00-005306-000 - (2-SNUB-003-5015) -

Applicable Manufacturer's Data Reports to be attached

The original snubber (TVA Serial No. M0440) was removed and tested as part of the 10 percent sample per the snubber program.

The replacement snubber (ADH-1000-3414) is a new snubber and was functionally tested per 2-SI-4.6.H-2B, Functional Testing of Bergen-Paterson Snubbers, prior to installation.

WO 02-006771-000 - (2-SNUB-003-5016) -

The original snubber (TVA Serial No. M0406) was removed and tested as part of the 10 percent sample per the snubber program.

The replacement snubber (ADH-1000-3416) is a new snubber and was functionally tested by the manufacturer.

WO 02-007272-000 - (2-SNUB-003-5023) -

The original snubber (5535) was scheduled for testing and return to service but was damaged during removal.

The replacement snubber (5501) is a new snubber and was functionally tested by the manufacturer.

CERTIFICATE OF COMPLIANCE

I certify that the statements made in the report are correct and this conforms to the rules of the ASME Code, Section XI.

Type Code Symbol Stamp N/A

Certificate of Authorization No. N/A Expiration Date N/A

Signed Stephen C. Willett, System Engineer Date 5/7, 20 03

Owner or Owner's Designee, Title

CERTIFICATE OF INSERVICE INSPECTION

I, the undersigned, holding a valid commission issued by the National Board of Boiler and Pressure Vessel Inspectors and the State or Province of Tennessee and employed by HSB CT of Connecticut have inspected the components described in this Owner's Report during the period 12.11.00 to 3.16.03, and state that to the best of my knowledge and belief, the Owner has performed examinations and taken corrective measures described in this Owner's Report in accordance with the requirements of the ASME Code, Section XI.

By signing this certificate neither the Inspector nor his employer makes any warranty, expressed or implied, concerning the examinations and corrective measures described in this Owner's Report. Furthermore, neither the Inspector nor his employer shall be liable in any manner for any personal injury or property damage or a loss of any kind arising from or connected with this inspection.

Albert Todd Commissions TN3135 A I B N US

Inspector's Signature National Board, State, Province, and Endorsements

Date May 30 2003

FORM NIS-2 OWNER'S REPORT FOR REPAIR/REPLACEMENT ACTIVITY

As Required by the Provisions of the ASME Code Section XI

1. Owner Tennessee Valley Authority (TVA) (Name)
   1101 Market Street
   Chattanooga, TN 37402-2801 (Address)

   Date April 30, 2003

   Sheet 1 of 1

2. Plant Browns Ferry Nuclear Plant (BFN) (Name)
   P. O. Box 2000, Decatur, AL 35609-2000 (Address)

   Unit 2

   Work Order (WO) 03-003454-000
   Repair/Replacement Organization P.O. No., Job No., etc.

3. Work Performed by TVA-BFN (Name)
   P. O. Box 2000, Decatur, AL 35609-2000 (Address)

   Type Code Symbol Stamp N/A
   Authorization No. N/A
   Expiration Date N/A

4. Identification of System System 073, High Pressure Coolant Injection (HPCI) System (ASME Code Class 1 equivalent)

5. (a) Applicable Construction Code USAS B31.1.0 19 67 * Edition, N/A Addenda, N/A Code Case

   (b) Applicable Edition of Section XI Utilized for Repairs or Replacements 19 95 Edition, 1996 Addenda

6. Identification of Components

Name of Component	Name of Manufacturer	Manufacturer Serial No.	National Board No.	Other Identification	Year Built	Corrected, Removed, or Installed	ASME Code Stamped (Yes or No)
Support (Snubber) 2-47B455S0023	Bergen-Paterson	TVA Serial No. M0???	N/A	2-SNUB-073-5008	N/A	*	No
* - Only the bolting of this support was replaced							
Pipe Clamp bolting	Bergen-Paterson	N/A	N/A	2-SNUB-073-5008	N/A	Removed	No
Pipe Clamp bolting	NOVA	N/A	N/A	2-SNUB-073-5008	N/A	Installed	No

7. Description of Work Replaced pipe clamp bolting.

8. Tests Conducted: Hydrostatic ☐ Pneumatic ☐ Nominal Operating Pressure ☐ Exempt ☐
   Other ☒** Pressure N/A psi Test Temp. N/A °F ** - See Remarks

NOTE: Supplemental Sheets in form of lists, sketches, or drawings may be used, provided (1) size is 8½ in. X 11 in., (2) information in items 1 through 6 on this report is included on each sheet, and (3) each sheet is numbered and the number of sheets is recorded at the top of this form.

*as amended by additional quality assurance requirements found in Contract 68C37-91602 and Design Criteria BFN-50-7073 and BFN-50-C-7105.

FORM NIS-2 (Back)

9. Remarks Bolting damaged during removal of pipe clamp for ISI inspections. VT-3 of snubber and bolting following installation.
Applicable Manufacturer's Data Reports to be attached

CERTIFICATE OF COMPLIANCE

I certify that the statements made in the report are correct and this conforms to the rules of the ASME Code, Section XI.

Type Code Symbol Stamp N/A

Certificate of Authorization No. N/A Expiration Date N/A

Signed [signature], System Engineer Date 5/6, 2003
Owner or Owner's Designee, Title

CERTIFICATE OF INSERVICE INSPECTION

I, the undersigned, holding a valid commission issued by the National Board of Boiler and Pressure Vessel Inspectors and the State or Province of Tennessee and employed by HSB CT of Connecticut have inspected the components described in this Owner's Report during the period 3-3-03 to 3-6-03, and state that to the best of my knowledge and belief, the Owner has performed examinations and taken corrective measures described in this Owner's Report in accordance with the requirements of the ASME Code, Section XI.

By signing this certificate neither the Inspector nor his employer makes any warranty, expressed or implied, concerning the examinations and corrective measures described in this Owner's Report. Furthermore, neither the Inspector nor his employer shall be liable in any manner for any personal injury or property damage or a loss of any kind arising from or connected with this inspection.

Albert Todd Commissions TN3135 A B N I NS
Inspector's Signature National Board, State, Province, and Endorsements

Date May 29 2003

FORM NIS-2 OWNER'S REPORT FOR REPAIR/REPLACEMENT ACTIVITY

As Required by the Provisions of the ASME Code Section XI

1. Owner Tennessee Valley Authority (TVA) (Name) — Date April 30, 2003

   1101 Market Street

   Chattanooga, TN 37402-2801 (Address) — Sheet 1 of 1

2. Plant Browns Ferry Nuclear Plant (BFN) (Name) — Unit 2

   P. O. Box 2000, Decatur, AL 35609-2000 (Address) — Work Order (WO) 03-004119-000 (Repair/Replacement Organization P.O. No., Job No., etc.)

3. Work Performed by TVA-BFN (Name) — Type Code Symbol Stamp N/A

   P. O. Box 2000, Decatur, AL 35609-2000 (Address) — Authorization No. N/A

   Expiration Date N/A

4. Identification of System System 074, Residual Heat Removal (RHR) System (ASME Code Class 1 equivalent)

5. (a) Applicable Construction Code USAS B31.1.0 19 67 * Edition, N/A Addenda, N/A Code Case

   (b) Applicable Edition of Section XI Utilized for Repairs or Replacements 19 95 Edition, 1996 Addenda

6. Identification of Components

Name of Component	Name of Manufacturer	Manufacturer Serial No.	National Board No.	Other Identification	Year Built	Corrected, Removed, or Installed	ASME Code Stamped (Yes or No)
Support (Snubber) 2-47B452S0235	Bergen-Paterson	TVA Serial No. M0503	N/A	2-SNUB-074-5037	N/A	Removed	No
Support (Snubber) 2-47B452S0235	Shaw Fronek A/DE	ADH-2000-1591	N/A	2-SNUB-074-5037	N/A	Installed	No

7. Description of Work Replaced snubber 2-SNUB-074-5037 with new snubber.

8. Tests Conducted: Hydrostatic ☐ Pneumatic ☐ Nominal Operating Pressure ☐ Exempt ☐

   Other ☒** Pressure N/A psi Test Temp. N/A °F **- See Remarks

NOTE: Supplemental Sheets in form of lists, sketches, or drawings may be used, provided (1) size is 8½ in. X 11 in., (2) information in items 1 through 6 on this report is included on each sheet, and (3) each sheet is numbered and the number of sheets is recorded at the top of this form.

*as amended by additional quality assurance requirements found in Contract 68C37-91602 and Design Criteria BFN-50-7074 and BFN-50-C-7105.

FORM NIS-2 (Back)

9. Remarks WO 03-004119-000 - (2-SNUB-074-5037) -

Applicable Manufacturer's Data Reports to be attached

The original snubber (TVA Serial No. M0503) was removed due hydraulic fluid leakage.

The original snubber (TVA Serial No. M0503) was rebuilt. Rebuild included replacement of a main cylinder tube.

The replacement snubber (ADH-2000-1591) is a new snubber and was functionally tested satisfactorily by the vendor.

CERTIFICATE OF COMPLIANCE

I certify that the statements made in the report are correct and this conforms to the rules of the ASME Code, Section XI.

Type Code Symbol Stamp N/A

Certificate of Authorization No. N/A Expiration Date N/A

Signed Glyndon C. Willis, System Engineer Date 5/7 ,20 03

Owner or Owner's Designee, Title

CERTIFICATE OF INSERVICE INSPECTION

I, the undersigned, holding a valid commission issued by the National Board of Boiler and Pressure Vessel Inspectors and the State or Province of Tennessee and employed by HSB CT of Connecticut have inspected the components described in this Owner's Report during the period 3.7.03 to 3.12.03, and state that to the best of my knowledge and belief, the Owner has performed examinations and taken corrective measures described in this Owner's Report in accordance with the requirements of the ASME Code, Section XI.

By signing this certificate neither the Inspector nor his employer makes any warranty, expressed or implied, concerning the examinations and corrective measures described in this Owner's Report. Furthermore, neither the Inspector nor his employer shall be liable in any manner for any personal injury or property damage or a loss of any kind arising from or connected with this inspection.

Albert Ladd Commissions TN 3135 ABINNS

Inspector's Signature National Board, State, Province, and Endorsements

Date May 30 2003

FORM NIS-2 OWNER'S REPORT FOR REPAIR/REPLACEMENT ACTIVITY
As Required by the Provisions of the ASME Code Section XI

1. Owner Tennessee Valley Authority (TVA) (Name)
1101 Market Street
Chattanooga, TN 37402-2801 (Address)

Date May 7, 2003

Sheet 1 of 1

2. Plant Browns Ferry Nuclear Plant (BFN) (Name)
P. O. Box 2000, Decatur, AL 35609-2000 (Address)

Unit 2

Work Orders (WO) 03-002011-000, 03-002012-000 and 03-006052-000
Repair/Replacement Organization P.O. No., Job No., etc.

3. Work Performed by TVA-BFN (Name)
P. O. Box 2000, Decatur, AL 35609-2000 (Address)

Type Code Symbol Stamp N/A
Authorization No. N/A
Expiration Date N/A

4. Identification of System System 085, Control Rod Drive System (ASME Code Class 2 equivalent)

5. (a) Applicable Construction Code USAS B31.1.0 19 67 * Edition, N/A Addenda, N/A Code Case
Accumulators - ASME Section VIII, Div 1, 1974 Edition, Summer 1975Addenda

(b) Applicable Edition of Section XI Utilized for Repairs or Replacements 19 95 Edition, 1996 Addenda

6. *Identification of Components*

Name of Component	Name of Manufacturer	Manufacturer Serial No.	National Board No.	Other Identification	Year Built	Corrected, Removed, or Installed	ASME Code Stamped (Yes or No)
CRD Hydraulic Control Unit Accumulator	General Electric	H3855	N/A	2-ACC-085-718/5043	Unknown	Removed	Yes
CRD Hydraulic Control Unit Accumulator	General Electric	H0638	N/A	2-ACC-085-718/5043	1977	Installed	Yes
CRD Hydraulic Control Unit Accumulator	General Electric	None Found	N/A	2-ACC-085-718/3823	Unknown	Removed	Unknown
CRD Hydraulic Control Unit Accumulator	General Electric	H0613	N/A	2-ACC-085-718/3823	1977	Installed	Yes
CRD Hydraulic Control Unit Accumulator	General Electric	A4704	N/A	2-ACC-085-718/5843	Unknown	Removed	Yes
CRD Hydraulic Control Unit Accumulator	General Electric	H0785	N/A	2-ACC-085-718/5843	1977	Installed	Yes

7. Description of Work Replaced 3 CRD Hydraulic Control Unit accumulators with new accumulators

8. Tests Conducted: Hydrostatic ☐ Pneumatic ☐ Nominal Operating Pressure ☒ Exempt ☐
Other ☐ Pressure N/A psi Test Temp. N/A °F

NOTE: Supplemental Sheets in form of lists, sketches, or drawings may be used, provided (1) size is 8½ in. X 11 in., (2) information in items 1 through 6 on this report is included on each sheet, and (3) each sheet is numbered and the number of sheets is recorded at the top of this form.

*as amended by additional quality assurance requirements found in Contract 73C60-75210, HAR-03-0410, 93185033, PEG pkg 030221-CHM653HA0 and Design Criteria BFN-50-7085 and BFN-50-C-7105.

FORM NIS-2 (Back)

9. Remarks Replaced 3 CRD Hydraulic Control Unit accumulators with new accumulators. Manufacturers' Data Reports attached.
Applicable Manufacturer's Data Reports to be attached

CERTIFICATE OF COMPLIANCE

I certify that the statements made in the report are correct and this conforms to the rules of the ASME Code, Section XI.

Type Code Symbol Stamp N/A

Certificate of Authorization No. N/A Expiration Date N/A

Signed [signature], System Engineer Date 5/9, 20 03
Owner or Owner's Designee, Title

CERTIFICATE OF INSERVICE INSPECTION

I, the undersigned, holding a valid commission issued by the National Board of Boiler and Pressure Vessel Inspectors and the State or Province of Tennessee and employed by HSB CT of Connecticut have inspected the components described in this Owner's Report during the period 2-28-03 to 5-29-03, and state that to the best of my knowledge and belief, the Owner has performed examinations and taken corrective measures described in this Owner's Report in accordance with the requirements of the ASME Code, Section XI.

By signing this certificate neither the Inspector nor his employer makes any warranty, expressed or implied, concerning the examinations and corrective measures described in this Owner's Report. Furthermore, neither the Inspector nor his employer shall be liable in any manner for any personal injury or property damage or a loss of any kind arising from or connected with this inspection.

[signature] Commissions TN3178
Inspector's Signature National Board, State, Province, and Endorsements

Date 5/29 20 03

FORM U-1A MANUFACTURERS' DATA REPORT FOR PRESSURE VESSELS
(Alternate Form for Single Chamber, Completely Shop-Fabricated Vessels Only)
As Required by the Provisions of the ASME Code Rules, Section VIII, Division 1

1. Manufactured by General Electric Company, P.O. Box 780, Wilmington, N.C.
2. Manufactured for Same as Above
3. Location of Installation
4. Type Vertical (Horiz. or vert. tank) H0638 (Mfgr's Serial No.) 105D6138 G001 (CRN) N/R (Drawing No.) (Nat'l Brd No.) (Year Built) 1977
5. The chemical and physical properties of all parts meet the requirements of material specifications of the ASME BOILER AND PRESSURE VESSEL CODE. The design, construction, and workmanship conform to ASME Rules, Section VIII, Division 1 1974 (Year) and Addenda to S'75 (Date) and Code Case Nos. --
Special Service per UG-120(d) As Per This Data Report - See Remarks Below
Manufacturers' Partial Data Reports properly identified and signed by Commissioned Inspectors have been furnished for the following items of the report: N/A
6. Shell: Matl. SA-106 Gr. B (Spec. No., Grade) Nom. Thk. .55 Corr. Allow. -- In. Diam. 8.70 In. Lgth. 3 ft 2.38 in.
7. Seams: Long. N/A Seamless (Welded, Dbl, Sngl, Lap, Butt) R.T. N/A (Spot or Full) Efficiency -- % H.T. Temp. -- F Time -- hr
Girth No Welding Performed (Welded, Dbl, Sngl, Lap, Butt) R.T. -- (Spot, Partial, or Full) No. of Courses --
8. Heads: (a) Material SA-182-F304 (Spec. No., Grade) (b) Material SA-182-F304 (Spec. No., Grade)

	Location (Top, Bottom, Ends)	Min. Thk.	Corr. Allow.	Crown Radius	Knuckle Radius	Ellipse Ratio	Conical Apex Angle	Hemisph. Radius	Flat Diam.	Side to Pressure (Convex or Concave)
(a)	Top	2.5"							7.230	Flathead
(b)	Bottom	2.5"							7.230	Flathead

If removable, bolts used (describe other fastenings) .500-13 Bolts-ASME-SA193-B7 for Split Flanges (4) (Material, Spec. No., Gr., Size, No.)
9. Constructed for max. allowable working pressure 2100 psi at max. temp. 400 F. Min. temp. (when less than −20 F) -- F. Hydrostatic, pneumatic, or combination test pressure 3200 psi.
10. Safety Valve Outlets: Number None Size -- Location ---
11. Nozzles and Inspection Openings:

Purpose (Inlet, Outlet, Drain)	No.	Diam. or Size	Type	Matl.	Nom. Thk.	Reinforcement Matl.	How Attached	Location
Gas Port	1	.75"	Split Flng.	30455	1.060	None	Bolts (4)	Bottm.
Water Port	1	.97"	Split Flng.	30455	1.300	None	Bolts (4)	Top

12. Supports: Skirt No (Yes or no) Lugs (No.) Legs (No.) Other (Describe) Attached (Where and how)
13. Remarks: Complete Mechanical Assembly with No Welded Joints.

Although A Differential Pressure Exsists on each side of the Internal Piston, the Accumulator Cylinder is Hydrostatically tested with the Piston removed. The Hydro Test pressure is based on the higher design pressure.

CERTIFICATE OF COMPLIANCE

We certify that the statements made in this report are correct and that all details of design, material, construction, and workmanship of this vessel conform to the ASME Code for Pressure Vessels, Section VIII, Division 1.
Date 9-7-77 Signed General Electric Co. (Manufacturer) by [signature] (Representative)
"U" Certificate of Authorization No. 10,572 expires June 10, 19 78

CERTIFICATE OF SHOP INSPECTION

Vessel made by General Electric Company at Wilmington, N.C.
I, the undersigned, holding a valid commission issued by the National Board of Boiler and Pressure Vessel Inspectors and/or the State or Province of N. Carolina and employed by Dept of Labor have inspected the pressure vessel described in this Manufacturers' Data Report on 9-7 19 77, and state that, to the best of my knowledge and belief, the Manufacturer has constructed this pressure vessel in accordance with ASME Code, Section VIII, Division 1. By signing this certificate neither the Inspector nor his employer makes any warranty, expressed or implied, concerning the pressure vessel described in the Manufacturers' Data Report. Furthermore, neither the Inspector nor his employer shall be liable in any manner for any personal injury or property damage or a loss of any kind arising from or connected with this inspection.
Signed [signature] (Inspector) Date 9-7-77 Commissions NC723, PA. NC1766, Ohio (Nat'l Board, State, Province and No.)

FORM U-1A MANUFACTURERS' DATA REPORT FOR PRESSURE VESSELS
(Alternate Form for Single Chamber, Completely Shop-Fabricated Vessels Only)
As Required by the Provisions of the ASME Code Rules, Section VIII, Division 1

1. Manufactured by General Electric Company, P.O. Box 780, Wilmington, N.C.
2. Manufactured for Same as Above
3. Location of Installation
4. Type Vertical (Horiz. or vert. tank) H0613 (Mfgr's Serial No.) 105D6138G001 (CRN) N/R (Drawing No.) (Nat'l Brd No.) (Year Built) 1977
5. The chemical and physical properties of all parts meet the requirements of material specifications of the ASME BOILER AND PRESSURE VESSEL CODE. The design, construction, and workmanship conform to ASME Rules, Section VIII, Division 1 1974 (Year) and Addenda to S'75 (Date) and Code Case Nos. —
Special Service per UG-120(d) As Per This Data Report - See Remarks Below
Manufacturers' Partial Data Reports properly identified and signed by Commissioned Inspectors have been furnished for the following items of the report: N/A
6. Shell: Matl. SA-106 Gr.B (Spec. No., Grade) Nom. Thk. .55 in. Corr. Allow. in. Diam. 8.70 in. Lgth. 3 ft 2.38 in.
7. Seams: Long. N/A Seamless (Welded, Dbl, Sngl, Lap, Butt) R.T. N/A (Spot or Full) Efficiency — % H.T. Temp. — F Time — hr
Girth No Welding Performed (Welded, Dbl, Sngl, Lap, Butt) R.T. — (Spot, Partial, or Full) No. of Courses —
8. Heads: (a) Material Sa-182-F304 (Spec. No., Grade) (b) Material Sa-182-F304 (Spec. No., Grade)

	Location (Top, Bottom, Ends)	Min. Thk.	Corr. Allow.	Crown Radius	Knuckle Radius	Ellipse Ratio	Conical Apex Angle	Hemisph. Radius	Flat Diam.	Side to Pressure (Convex or Concave)
(a)	Top	2.5"							7.230	Flathead
(b)	Bottom	2.5"							7.230	Flathead

If removable, bolts used (describe other fastenings) 500-13 Bolts-ASME-SA193-B7 for Split Flanges (4) (Material, Spec. No., Gr., Size, No.)
9. Constructed for max. allowable working pressure 2100 psi at max. temp. 400 F. Min. temp. (when less than −20 F) — F. Hydrostatic, pneumatic, or combination test pressure 3200 psi.
10. Safety Valve Outlets: Number None Size — Location —
11. Nozzles and Inspection Openings:

Purpose (Inlet, Outlet, Drain)	No.	Diam. or Size	Type	Matl.	Nom. Thk.	Reinforcement Matl.	How Attached	Location
Gas Port	1	.75"	Split Flng.	30455	1.060	None	Bolts	(4) Bottom.
Water Port	1	.97"	Split Flng.	30455	1.300	None	Bolts	(4) Top

12. Supports: Skirt No (Yes or no) Lugs (No.) Legs (No.) Other (Describe) Attached (Where and how)
13. Remarks: Complete Mechanical Assembly with No Welded Joints.

Although A Differential Pressure Exists on each side of the Internal Piston, the Accumulator Cylinder is Hydrostatically tested with the Piston removed. The Hydro Test pressure is based on the higher design pressure.

CERTIFICATE OF COMPLIANCE

We certify that the statements made in this report are correct and that all details of design, material, construction, and workmanship of this vessel conform to the ASME Code for Pressure Vessels, Section VIII, Division 1.
Date 9-23-77 Signed General Electric Co. (Manufacturer) by (Representative)
"U" Certificate of Authorization No. 10,572 expires June 10, 1978

CERTIFICATE OF SHOP INSPECTION

Vessel made by General Electric Co. at Wilmington, N. C.
I, the undersigned, holding a valid commission issued by the National Board of Boiler and Pressure Vessel Inspectors and/or the State or Province of N. Carolina and employed by Dept Of Labor have inspected the pressure vessel described in this Manufacturers' Data Report on 9/23 19 77 and state that to the best of my knowledge and belief, the Manufacturer has constructed this pressure vessel in accordance with ASME Code, Section VIII, Division 1. By signing this certificate neither the Inspector nor his employer makes any warranty, expressed or implied, concerning the pressure vessel described in the Manufacturers' Data Report. Furthermore, neither the Inspector nor his employer shall be liable in any manner for any personal injury or property damage or a loss of any kind arising from or connected with this inspection.
Signed (Inspector) Date 9/23/77 Commissions NC 723, PA WC1766, OHIO (Nat'l Board, State, Province and No.)

FORM U-1A MANUFACTURERS' DATA REPORT FOR PRESSURE VESSELS
(Alternate Form for Single Chamber, Completely Shop-Fabricated Vessels Only)
As Required by the Provisions of the ASME Code Rules, Section VIII, Division 1

1. Manufactured by General Electric Company, P.O. Box 780, Wilmington, N.C.
2. Manufactured for Same as Above
3. Location of Installation
4. Type Vertical (Horiz. or vert. tank) H0785 (Mfg's Serial No.) (CRN) 105D6138G001 (Drawing No.) N/R (Nat'l Bd No.) (Year Built) 1977
5. The chemical and physical properties of all parts meet the requirements of material specifications of the ASME BOILER AND PRESSURE VESSEL CODE. The design, construction, and workmanship conform to ASME Rules, Section VIII, Division 1 1974 (Year) and Addenda to S'75 (Date) and Code Case Nos. --
Special Service per UG-120(d) As Per This Data Report - See Remarks Below
Manufacturers' Partial Data Reports properly identified and signed by Commissioned Inspectors have been furnished for the following items of the report: N/A
6. Shell: Matl. SA-106 Gr. B (Spec. No., Grade) Nom. Thk. .55 in. Corr. Allow. ____ in. Diam. 8.70 in. Lgth. 3 ft 2.38 in.
7. Seams: Long. N/A Seamless (Welded, Dbl, Sngl, Lap, Butt) R.T. N/A (Spot or Full) Efficiency -- % H.T. Temp. -- F Time -- hr
Girth No Welding Performed (Welded, Dbl, Sngl, Lap, Butt) R.T. -- (Spot, Partial, or Full) No. of Courses --
8. Heads: (a) Material Sa-182-F304 (Spec. No., Grade) (b) Material Sa-182-F304 (Spec. No., Grade)

	Location (Top, Bottom, Ends)	Min. Thk.	Corr. Allow.	Crown Radius	Knuckle Radius	Ellipse Ratio	Conical Apex Angle	Hemisph. Radius	Flat Diam.	Side to Pressure (Convex or Concave)
(a)	Top	2.5"							7.230	Flathead
(b)	Bottom	2.5"							7.230	Flathead

If removable, bolts used (describe other fastenings) 500-13 Bolts-ASME-SA193-B7 for Split Flanges (4) (Material, Spec. No., Gr., Size, No.)
9. Constructed for max. allowable working pressure 2100 psi at max. temp. 400 F. Min. temp. (when less than -20 F) -- F. Hydrostatic, pneumatic, or combination test pressure 3200 psi.
10. Safety Valve Outlets: Number None Size -- Location -------
11. Nozzles and Inspection Openings:

Purpose (Inlet, Outlet, Drain)	No.	Diam. or Size	Type	Matl.	Nom. Thk.	Reinforcement Matl.	How Attached	Location
Gas Port	1	.75"	Split Flng.	30455	1.060	None	Bolts	(4) Bottom.
Water Port	1	.97"	Split Flng.	30455	1.300	None	Bolts	(4) Top

12. Supports: Skirt No (Yes or no) Lugs ____ (No.) Legs ____ (No.) Other ____ (Describe) Attached ____ (Where and how)
13. Remarks: Complete Mechanical Assembly with No Welded Joints.

Although A Differential Pressure Exists on each side of the Internal Piston, the Accumulator Cylinder is Hydrostatically tested with the Piston removed. The Hydro Test pressure is based on the higher design pressure.

CERTIFICATE OF COMPLIANCE

We certify that the statements made in this report are correct and that all details of design, material, construction, and workmanship of this vessel conform to the ASME Code for Pressure Vessels, Section VIII, Division 1.
Date 11-15-77 Signed General Electric Co. (Manufacturer) by [signature] (Representative)
"U" Certificate of Authorization No. 10,572 expires June 10, 1978

CERTIFICATE OF SHOP INSPECTION

Vessel made by General Electric Co. at Wilmington, N. C.
I, the undersigned, holding a valid commission issued by the National Board of Boiler and Pressure Vessel Inspectors and/or the State or Province of N. Carolina and employed by Dept Of Labor have inspected the pressure vessel described in this Manufacturers' Data Report on 11-15- 19 77 and state that, to the best of my knowledge and belief, the Manufacturer has constructed this pressure vessel in accordance with ASME Code, Section VIII, Division 1. By signing this certificate neither the Inspector nor his employer makes any warranty, expressed or implied, concerning the pressure vessel described in the Manufacturers' Data Report. Furthermore, neither the Inspector nor his employer shall be liable in any manner for any personal injury or property damage or a loss of any kind arising from or connected with this inspection.
Signed [signature] (Inspector) Date 11-15-77 Commissions NC 723, PA. WC1766, OHIO (Nat'l Board, State, Province and No.)

FORM NIS-2 OWNER'S REPORT FOR REPAIR/REPLACEMENT ACTIVITY
As Required by the Provisions of the ASME Code Section XI

1. Owner Tennessee Valley Authority (TVA) (Name)
   1101 Market Street
   Chattanooga, TN 37402-2801 (Address)

   Date May 7, 2003

   Sheet 1 of 1

2. Plant Browns Ferry Nuclear Plant (BFN) (Name)
   P. O. Box 2000, Decatur, AL 35609-2000 (Address)

   Unit 2

   Work Orders (WO) 02-004844-000 and 02-010075-000
   Repair/Replacement Organization P.O. No., Job No., etc.

3. Work Performed by TVA-BFN (Name)
   P. O. Box 2000, Decatur, AL 35609-2000 (Address)

   Type Code Symbol Stamp N/A
   Authorization No. N/A
   Expiration Date N/A

4. Identification of System System 001, Main Steam System (ASME Code Class 2 equivalent)

ASME III CL. 2 '88 (VALVE)

5. (a) Applicable Construction Code USAS B31.1.0 19 67 * Edition, N/A Addenda, N/A Code Case 5/28/03 5/28/03

   (b) Applicable Edition of Section XI Utilized for Repairs or Replacements 19 95 Edition, 1996 Addenda

6. Identification of Components

Name of Component	Name of Manufacturer	Manufacturer Serial No.	National Board No.	Other Identification	Year Built	Corrected, Removed, or Installed	ASME Code Stamped (Yes or No)
Off-gas Preheater CKV	FLOWSERVE	E966A-1-1	N/A	2-CKV-001-0742	2000	*	No
* - replaced valve disc and bolting							
disc	FLOWSERVE	N/A	N/A	2-CKV-001-0742		Removed	No
disc	FLOWSERVE	N/A	N/A	2-CKV-001-0742		Replaced	No
bolting	FLOWSERVE	N/A	N/A	2-CKV-001-0742		Removed	No
bolting	NOVA	N/A	N/A	2-CKV-001-0742		Replaced	No
Off-gas Preheater CKV	FLOWSERVE	E966A-1-2	N/A	2-CKV-001-0744	2000	**	No
** - replaced valve disc							
disc	FLOWSERVE	N/A	N/A	2-CKV-001-0744		Removed	No
disc	FLOWSERVE	N/A	N/A	2-CKV-001-0744		Replaced	No

7. Description of Work Replaced valve disc on both check valves and flange bolting on 2-CKV-001-0742.

8. Tests Conducted: Hydrostatic ☐ Pneumatic ☐ Nominal Operating Pressure ☒ Exempt ☐

   Other ☐ Pressure N/A psi Test Temp. N/A °F

NOTE: Supplemental Sheets in form of lists, sketches, or drawings may be used, provided (1) size is 8½ in. X 11 in., (2) information in items 1 through 6 on this report is included on each sheet, and (3) each sheet is numbered and the number of sheets is recorded at the top of this form.

*as amended by additional quality assurance requirements found in Contract 1474286, PO 1721/Release 176, PO 1827/Release 445, and Design Criteria BFN-50-7001 and BFN-50-C-7105.

FORM NIS-2 (Back)

9. Remarks Replaced valve disc on both check valves and flange bolting on 2-CKV-001-0742.
Applicable Manufacturer's Data Reports to be attached

CERTIFICATE OF COMPLIANCE

I certify that the statements made in the report are correct and this conforms to the rules of the ASME Code, Section XI.

Type Code Symbol Stamp N/A

Certificate of Authorization No. N/A Expiration Date N/A

Signed [signature], System Engineer Date 5/9, 20 03
Owner or Owner's Designee, Title

CERTIFICATE OF INSERVICE INSPECTION

I, the undersigned, holding a valid commission issued by the National Board of Boiler and Pressure Vessel Inspectors and the State or Province of Tennessee and employed by HSB CT of Connecticut have inspected the components described in this Owner's Report during the period 3·7·03 to 3·16·03, and state that to the best of my knowledge and belief, the Owner has performed examinations and taken corrective measures described in this Owner's Report in accordance with the requirements of the ASME Code, Section XI.

By signing this certificate neither the Inspector nor his employer makes any warranty, expressed or implied, concerning the examinations and corrective measures described in this Owner's Report. Furthermore, neither the Inspector nor his employer shall be liable in any manner for any personal injury or property damage or a loss of any kind arising from or connected with this inspection.

[signature] Commissions TN3135 A B I N NS
Inspector's Signature National Board, State, Province, and Endorsements

Date May 28 20 03

FORM NIS-2 OWNER'S REPORT FOR REPAIR/REPLACEMENT ACTIVITY
As Required by the Provisions of the ASME Code Section XI

1. Owner Tennessee Valley Authority (TVA) (Name)
1101 Market Street
Chattanooga, TN 37402-2801 (Address)

Date May 12, 2003

Sheet 1 of 1

2. Plant Browns Ferry Nuclear Plant (BFN) (Name)
P. O. Box 2000, Decatur, AL 35609-2000 (Address)

Unit 2

Work Orders (WO) 03-001972-000 and 03-003606-000
Repair/Replacement Organization P.O. No., Job No., etc.

3. Work Performed by TVA-BFN (Name)
P. O. Box 2000, Decatur, AL 35609-2000 (Address)

Type Code Symbol Stamp N/A
Authorization No. N/A
Expiration Date N/A

4. Identification of System System 001, Main Steam System (ASME Code Class 2 equivalent)

5. (a) Applicable Construction Code USAS B31.1.0 19 67 * Edition, N/A Addenda, N/A Code Case

(b) Applicable Edition of Section XI Utilized for Repairs or Replacements 19 95 Edition, 1996 Addenda

6. Identification of Components

Name of Component	Name of Manufacturer	Manufacturer Serial No.	National Board No.	Other Identification	Year Built	Corrected, Removed, or Installed	ASME Code Stamped (Yes or No)
RFPT 2C HP Steam Stop Valve	General Electric	N/A	N/A	2-FCV-001-0143	N/A	*	No
* - Replaced valve disc							
Valve disc	General Electric	N/A	N/A	2-FCV-001-0143	N/A	Removed	No
Valve disc	General Electric	N/A	N/A	2-FCV-001-0143	N/A	Installed	No
RFPT 2B HP Steam Stop Valve	General Electric	N/A	N/A	2-FCV-001-0135	N/A	*	No
* - Replaced valve disc							
Valve disc	General Electric	N/A	N/A	2-FCV-001-0135	N/A	Removed	No
Valve disc	General Electric	N/A	N/A	2-FCV-001-0135	N/A	Installed	No

7. Description of Work Replaced the valve disc on both valves.

8. Tests Conducted: Hydrostatic ☐ Pneumatic ☐ Nominal Operating Pressure ☒ Exempt ☐

Other ☐ Pressure N/A psi Test Temp. N/A °F

NOTE: Supplemental Sheets in form of lists, sketches, or drawings may be used, provided (1) size is 8½ in. X 11 in., (2) information in items 1 through 6 on this report is included on each sheet, and (3) each sheet is numbered and the number of sheets is recorded at the top of this form.

*as amended by additional quality assurance requirements found in VTM-G080-6870 and Design Criteria BFN-50-7001 and BFN-50-C-7105.

FORM NIS-2 (Back)

9. Remarks Replaced the valve disc on both valves.

Applicable Manufacturer's Data Reports to be attached

CERTIFICATE OF COMPLIANCE

I certify that the statements made in the report are correct and this conforms to the rules of the ASME Code, Section XI.

Type Code Symbol Stamp N/A

Certificate of Authorization No. N/A Expiration Date N/A

Signed Stephen C. Willard, System Engineer Date 5/12, 20 03

Owner or Owner's Designee, Title

CERTIFICATE OF INSERVICE INSPECTION

I, the undersigned, holding a valid commission issued by the National Board of Boiler and Pressure Vessel Inspectors and the State or Province of Tennessee and employed by HSB CT of Connecticut have inspected the components described in this Owner's Report during the period 3.7.03 to 5.9.03, and state that to the best of my knowledge and belief, the Owner has performed examinations and taken corrective measures described in this Owner's Report in accordance with the requirements of the ASME Code, Section XI.

By signing this certificate neither the Inspector nor his employer makes any warranty, expressed or implied, concerning the examinations and corrective measures described in this Owner's Report. Furthermore, neither the Inspector nor his employer shall be liable in any manner for any personal injury or property damage or a loss of any kind arising from or connected with this inspection.

Albert Ladd Commissions TN3135 A B I N NS

Inspector's Signature National Board, State, Province, and Endorsements

Date May 29 20 03

BFPER03·004029

FORM NIS-2 OWNER'S REPORT FOR REPAIR/REPLACEMENT ACTIVITY
As Required by the Provisions of the ASME Code Section XI

1. Owner Tennessee Valley Authority (TVA) (Name)
1101 Market Street
Chattanooga, TN 37402-2801 (Address)

Date May 12, 2003

Sheet 1 of 1

2. Plant Browns Ferry Nuclear Plant (BFN) (Name)
P. O. Box 2000, Decatur, AL 35609-2000 (Address)

Unit 2

Work Order (WO) 02-004442-000
Repair/Replacement Organization P.O. No., Job No., etc.

3. Work Performed by TVA-BFN (Name)
P. O. Box 2000, Decatur, AL 35609-2000 (Address)

Type Code Symbol Stamp N/A

Authorization No. N/A

Expiration Date N/A

4. Identification of System System 001, Main Steam System (ASME Code Class 2 equivalent)

5. (a) Applicable Construction Code USAS B31.1.0 19 67 * Edition, N/A Addenda, N/A Code Case

(b) Applicable Edition of Section XI Utilized for Repairs or Replacements 19 95 Edition, 1996 Addenda

6. Identification of Components

Name of Component	Name of Manufacturer	Manufacturer Serial No.	National Board No.	Other Identification	Year Built	Corrected, Removed, or Installed	ASME Code Stamped (Yes or No)
Main Steam Drain Piping	Dravo	N/A	N/A	N/A	N/A	Removed	No
Main Steam Drain Piping	Consolidated / US Steel/ Bonney Forge	N/A	N/A	N/A	N/A	Installed	No

7. Description of Work Replaced a section of 1½" Main Steam drain piping an fittings

8. Tests Conducted: Hydrostatic ☐ Pneumatic ☐ Nominal Operating Pressure ☒* Exempt ☐
*- Reference Code Case N-416-1
Other ☐ Pressure N/A psi Test Temp. N/A °F

NOTE: Supplemental Sheets in form of lists, sketches, or drawings may be used, provided (1) size is 8½ in. X 11 in., (2) information in items 1 through 6 on this report is included on each sheet, and (3) each sheet is numbered and the number of sheets is recorded at the top of this form.

*as amended by additional quality assurance requirements found in Contract 68C37-91602 and Design Criteria BFN-50-7001 and BFN-50-C-7105.

FORM NIS-2 (Back)

9. Remarks Replaced a section of 1½" Main Steam drain piping an fittings. Reference Code Case N-416-1
Applicable Manufacturer's Data Reports to be attached

CERTIFICATE OF COMPLIANCE

I certify that the statements made in the report are correct and this conforms to the rules of the ASME Code, Section XI.

Type Code Symbol Stamp N/A

Certificate of Authorization No. N/A Expiration Date N/A

Signed Stephen C. Willard, System Engineer Date 5/12 , 20 03
Owner or Owner's Designee, Title

CERTIFICATE OF INSERVICE INSPECTION

I, the undersigned, holding a valid commission issued by the National Board of Boiler and Pressure Vessel Inspectors and the State or Province of Tennessee and employed by HSB CT of Connecticut have inspected the components described in this Owner's Report during the period 4.24.03 to 5.1.03, and state that to the best of my knowledge and belief, the Owner has performed examinations and taken corrective measures described in this Owner's Report in accordance with the requirements of the ASME Code, Section XI.

By signing this certificate neither the Inspector nor his employer makes any warranty, expressed or implied, concerning the examinations and corrective measures described in this Owner's Report. Furthermore, neither the Inspector nor his employer shall be liable in any manner for any personal injury or property damage or a loss of any kind arising from or connected with this inspection.

Albert Todd
Inspector's Signature

Commissions TN 3135 A B I N NS
National Board, State, Province, and Endorsements

Date May 28 2003

FORM NIS-2 OWNER'S REPORT FOR REPAIR/REPLACEMENT ACTIVITY
As Required by the Provisions of the ASME Code Section XI

1. Owner Tennessee Valley Authority (TVA) (Name)
   1101 Market Street
   Chattanooga, TN 37402-2801 (Address)

   Date May 12, 2003

   Sheet 1 of 1

2. Plant Browns Ferry Nuclear Plant (BFN) (Name)
   P. O. Box 2000, Decatur, AL 35609-2000 (Address)

   Unit 2

   Work Order (WO) 02-006492-000 and 01-007381-001
   Repair/Replacement Organization P.O. No., Job No., etc.

3. Work Performed by TVA-BFN (Name)
   P. O. Box 2000, Decatur, AL 35609-2000 (Address)

   Type Code Symbol Stamp N/A
   Authorization No. N/A
   Expiration Date N/A

4. Identification of System System 001, Main Steam System (ASME Code Class 2 equivalent)

5. (a) Applicable Construction Code ASME Section III, Article 9, 1965 and ASME Section III 19 68 Edition, Summer 1970 Addenda, N/A Code Case

   (b) Applicable Edition of Section XI Utilized for Repairs or Replacements 19 95 Edition, 1996 Addenda

6. Identification of Components

Name of Component	Name of Manufacturer	Manufacturer Serial No.	National Board No.	Other Identification	Year Built	Corrected, Removed, or Installed	ASME Code Stamped (Yes or No)
Main Steam Relief Valve	Target Rock Corp. 7567F-000-10	1070	N/A	2-PCV-001-0022	1968	Removed	No
Main Steam Relief Valve	Target Rock Corp. 7567F-000-10	1059	N/A	2-PCV-001-0022	1968	Installed	No

7. Description of Work Replaced Main Steam Relief valve main body. Replaced the inlet and outlet bolting.

8. Tests Conducted: Hydrostatic ☐ Pneumatic ☐ Nominal Operating Pressure ☒ Exempt ☐
   Other ☐ Pressure N/A psi Test Temp. N/A °F

NOTE: Supplemental Sheets in form of lists, sketches, or drawings may be used, provided (1) size is 8½ in. X 11 in., (2) information in items 1 through 6 on this report is included on each sheet, and (3) each sheet is numbered and the number of sheets is recorded at the top of this form.

*as amended by additional quality assurance requirements found in GE P. O. 205AJ600, and Design Criteria BFN-50-7001 and BFN-50-C-7105.

FORM NIS-2 (Back)

9. Remarks The main valve body was replaced with rebuilt valve body previously used on Unit 3 (same manufacturer/model number).
Applicable Manufacturer's Data Reports to be attached
As a part of the Tech Spec required valve inspections WO 02-006492-000 replaced 2-PCV-001-0022 with a rebuilt valve previously used in BFN Unit 3 (3-PCV-001-0019, S/N 1059) and installed new inlet and outlet flange studs and nuts. The replacement valve was removed from Unit 3 by WO 01-007381-000 and refurbished by WO 01-007381-001 (A pressure retaining bolt was replaced under WO 01-007381-001). Inlet studs and outlet studs and nuts were replaced for ease of maintenance and ALARA considerations.

CERTIFICATE OF COMPLIANCE

I certify that the statements made in the report are correct and this conforms to the rules of the ASME Code, Section XI.

Type Code Symbol Stamp N/A

Certificate of Authorization No. N/A Expiration Date N/A

Signed [signature], System Engineer (Owner or Owner's Designee, Title) Date 5/12, 20 03

CERTIFICATE OF INSERVICE INSPECTION

I, the undersigned, holding a valid commission issued by the National Board of Boiler and Pressure Vessel Inspectors and the State or Province of Tennessee and employed by HSB CT of Connecticut have inspected the components described in this Owner's Report during the period 9.20.02 to 3.13.03, and state that to the best of my knowledge and belief, the Owner has performed examinations and taken corrective measures described in this Owner's Report in accordance with the requirements of the ASME Code, Section XI.

By signing this certificate neither the Inspector nor his employer makes any warranty, expressed or implied, concerning the examinations and corrective measures described in this Owner's Report. Furthermore, neither the Inspector nor his employer shall be liable in any manner for any personal injury or property damage or a loss of any kind arising from or connected with this inspection.

Albert Todd (Inspector's Signature) Commissions TN 3135 "A" "B" "I" "N" "NS" (National Board, State, Province, and Endorsements)

Date May 23 20 03

FORM NIS-2 OWNER'S REPORT FOR REPAIR/REPLACEMENT ACTIVITY
As Required by the Provisions of the ASME Code Section XI

1. Owner Tennessee Valley Authority (TVA) (Name)
   1101 Market Street
   Chattanooga, TN 37402-2801 (Address)

   Date May 12, 2003

   Sheet 1 of 1

2. Plant Browns Ferry Nuclear Plant (BFN) (Name)
   P. O. Box 2000, Decatur, AL 35609-2000 (Address)

   Unit 2

   Work Order (WO) 99-013131-000
   Repair/Replacement Organization P.O. No., Job No., etc.

3. Work Performed by TVA-BFN (Name)
   P. O. Box 2000, Decatur, AL 35609-2000 (Address)

   Type Code Symbol Stamp N/A
   Authorization No. N/A
   Expiration Date N/A

4. Identification of System System 074, Residual Heat Removal (RHR) System (ASME Code Class 1 equivalent)

5. (a) Applicable Construction Code USAS B31.1.0 19 67 * Edition, N/A Addenda, N/A Code Case

   (b) Applicable Edition of Section XI Utilized for Repairs or Replacements 19 95 Edition, 1996 Addenda

6. Identification of Components

Name of Component	Name of Manufacturer	Manufacturer Serial No.	National Board No.	Other Identification	Year Built	Corrected, Removed, or Installed	ASME Code Stamped (Yes or No)
RHR Shutdown Cooling Outbd Vlv	Walworth 20" 5232PSB 600# Gate Vlv	N/A	N/A	2-FCV-074-0047	Unknown	*	No
* - Replaced valve disc							
valve disc	Walworth	Unknown	N/A	2-FCV-074-0047	Unknown	Removed	No
valve disc	Crane Aloyco	A6331	N/A	2-FCV-074-0047	1989	Installed	No

7. Description of Work Replaced valve disc.

8. Tests Conducted: Hydrostatic ☐ Pneumatic ☐ Nominal Operating Pressure ☒ Exempt ☐
   Other ☐ Pressure N/A psi Test Temp. N/A °F

NOTE: Supplemental Sheets in form of lists, sketches, or drawings may be used, provided (1) size is 8½ in. X 11 in., (2) information in items 1 through 6 on this report is included on each sheet, and (3) each sheet is numbered and the number of sheets is recorded at the top of this form.

*as amended by additional quality assurance requirements found in Contract 87NNR-375838, Dwg A-12332-M-1-C and Design Criteria BFN-50-7074 and BFN-50-C-7105.

FORM NIS-2 (Back)

9. Remarks Replaced valve disc.

Applicable Manufacturer's Data Reports to be attached

CERTIFICATE OF COMPLIANCE

I certify that the statements made in the report are correct and this conforms to the rules of the ASME Code, Section XI.

Type Code Symbol Stamp N/A

Certificate of Authorization No. N/A Expiration Date N/A

Signed System Engineer Date 5/13 , 20 03

Owner or Owner's Designee, Title

CERTIFICATE OF INSERVICE INSPECTION

I, the undersigned, holding a valid commission issued by the National Board of Boiler and Pressure Vessel Inspectors and the State or Province of Tennessee and employed by HSB CT of Connecticut have inspected the components described in this Owner's Report during the period 3.7.03 to 3.14.03 , and state that to the best of my knowledge and belief, the Owner has performed examinations and taken corrective measures described in this Owner's Report in accordance with the requirements of the ASME Code, Section XI.

By signing this certificate neither the Inspector nor his employer makes any warranty, expressed or implied, concerning the examinations and corrective measures described in this Owner's Report. Furthermore, neither the Inspector nor his employer shall be liable in any manner for any personal injury or property damage or a loss of any kind arising from or connected with this inspection.

Albert Ladd Commissions TN 313 S A B I N NS

Inspector's Signature National Board, State, Province, and Endorsements

Date May 22 2003

FORM NIS-2 OWNER'S REPORT FOR REPAIR/REPLACEMENT ACTIVITY
As Required by the Provisions of the ASME Code Section XI

1. Owner Tennessee Valley Authority (TVA) (Name)
1101 Market Street
Chattanooga, TN 37402-2801 (Address)

Date May 13, 2003

Sheet 1 of 2

2. Plant Browns Ferry Nuclear Plant (BFN) (Name)
P. O. Box 2000, Decatur, AL 35609-2000 (Address)

Unit 2

Design Change Notice (DCN) T40978A,
Work Plan T40978-003, Work Order (WO) 98-014823-000
Repair/Replacement Organization P.O. No., Job No., etc.

3. Work Performed by TVA-BFN (Name)
P. O. Box 2000, Decatur, AL 35609-2000 (Address)

Type Code Symbol Stamp N/A
Authorization No. N/A
Expiration Date N/A

4. Identification of System System 077, Radwaste System (ASME Code Class 2 equivalent)

5. (a) Applicable Construction Code (valves) ASME Section III, Class 2, ~~1989~~ 1989 Edition (Equivalent) (piping) USAS B31.1.0 19 67 * Edition, N/A Addenda, N/A Code Case SLW 6/23/03 ATT 6/23/03

(b) Applicable Edition of Section XI Utilized for Repairs or Replacements 19 95 Edition, 1996 Addenda

6. Identification of Components

Name of Component	Name of Manufacturer	Manufacturer Serial No.	National Board No.	Other Identification	Year Built	Corrected, Removed, or Installed	ASME Code Stamped (Yes or No)
Drywell Floor Drain Sump Inbd Isolation Valve	Velan B10-064B-2TS	N/A	N/A	2-FCV-077-0002A	Unknown	Removed	No
Drywell Floor Drain Sump Inbd Isolation Valve	Worcester Controls	99-0048-1	N/A	2-FCV-077-0002A	2000	Installed	No
Drywell Floor Drain Sump Outbd Isolation Valve	Velan B10-064B-2TS	N/A	N/A	2-FCV-077-0002B	Unknown	Removed	No
Drywell Floor Drain Sump Outbd Isolation Valve	Worcester Controls	99-0048-2	N/A	2-FCV-077-0002B	2000	Installed	No
piping	Unknown	N/A	N/A	N/A	N/A	Removed	No
piping	Consolidated Power Supply	N/A	N/A	N/A	N/A	Installed	No
Identification of Components continued on Page 2							

7. Description of Work Replaced the Drywell Floor Drain Sump Inbd and Outbd Isolation Valves and the piping in between the valves. Modified a support and removed four snubbers.

8. Tests Conducted: Hydrostatic ☐ Pneumatic ☐ Nominal Operating Pressure ☒** Exempt ☐
** - Reference Code Case N-416-1
Other ☐ Pressure N/A psi Test Temp. N/A °F

NOTE: Supplemental Sheets in form of lists, sketches, or drawings may be used, provided (1) size is 8½ in. X 11 in., (2) information in items 1 through 6 on this report is included on each sheet, and (3) each sheet is numbered and the number of sheets is recorded at the top of this form.

*as amended by additional quality assurance requirements found in Contracts 250534 & 1364025 and Design Criteria BFN-50-7064 Att 5, BFN-50-7077 and BFN-50-C-7105.

FORM NIS-2 (Back)

9. Remarks Replaced the Drywell Floor Drain Sump Inbd and Outbd Isolation Valves (2-FCV-077-0002A & -0002B and
Applicable Manufacturer's Data Reports to be attached
and the piping in between the valves. Modified pipe support 2-47B482S0025and permanently removed snubbers 2-SNUB-077-5001, .
2-SNUB-077-5002, 2-SNUB-077-5007 and 2-SNUB-077-5008. Reference Code Case N-416-1. VT-2 performed during 2-SI-3.3.2.A.

CERTIFICATE OF COMPLIANCE

I certify that the statements made in the report are correct and this conforms to the rules of the ASME Code, Section XI.

Type Code Symbol Stamp N/A

Certificate of Authorization No. N/A Expiration Date N/A

Signed Stephen C. Willard, System Engineer Date 5/19, 2003
Owner or Owner's Designee, Title

CERTIFICATE OF INSERVICE INSPECTION

I, the undersigned, holding a valid commission issued by the National Board of Boiler and Pressure Vessel Inspectors and the State or Province of Tennessee and employed by HSB CT of Connecticut have inspected the components described in this Owner's Report during the period 02-07-01 to 3-10-03, and state that to the best of my knowledge and belief, the Owner has performed examinations and taken corrective measures described in this Owner's Report in accordance with the requirements of the ASME Code, Section XI.

By signing this certificate neither the Inspector nor his employer makes any warranty, expressed or implied, concerning the examinations and corrective measures described in this Owner's Report. Furthermore, neither the Inspector nor his employer shall be liable in any manner for any personal injury or property damage or a loss of any kind arising from or connected with this inspection.

Albert Ledd
Inspector's Signature

Commissions TN 3135 "A" "B" "I" "N" "NS"
National Board, State, Province, and Endorsements

Date May 23 2003

FORM NIS-2 OWNER'S REPORT FOR REPAIRS/REPLACEMENT ACTIVITY
SUPPLEMENTAL SHEET

1. Owner Tennessee Valley Authority (TVA) (Name)
1101 Market Street
Chattanooga, TN 37402-2801 (Address)

Date May 13, 2003

Sheet 2 of 2

2. Plant Browns Ferry Nuclear Plant (BFN) (Name)
P. O. Box 2000, Decatur, AL 35609-2000 (Address)

Unit 2

Design Change Notice (DCN) T40978A,
Work Plan T40978-003, Work Order (WO) 98-014823-000
(Repair/Replacement Organization P.O. No., Job No., etc.)

3. Work Performed by TVA-BFN (Name)
P. O. Box 2000, Decatur, AL 35609-2000 (Address)

Type Code Symbol Stamp N/A

Authorization No. N/A

Expiration Date N/A

4. Identification of System System 077, Radwaste System (ASME Code Class 2 equivalent)

5. (a) Applicable Construction Code USAS B31.1.0 19 67* Edition, N/A Addenda, N/A Code Case
(b) Applicable Edition of Section XI Utilized for Repairs or Replacements 19 95, 1996 Addenda

6. Identification of Components

Name of Component	Name of Manufacturer	Manufacturer Serial No.	National Board No.	Other Identification	Year Built	Corrected, Removed, or Installed	ASME Code Stamped (Yes or No)
Pipe Support	TVA	N/A	N/A	2-47B482S0025	N/A	Corrected	No
Pipe Support Snubber	Pacific Scientific	10668	N/A	2-SNUB-077-5001 2-47B482S0133L	N/A	Removed	No
Pipe Support Snubber	Pacific Scientific	17828	N/A	2-SNUB-077-5002 2-47B482S0133N	N/A	Removed	No
Pipe Support Snubber	Pacific Scientific	10539	N/A	2-SNUB-077-5007 2-47B482S0134L	N/A	Removed	No
Pipe Support Snubber	Pacific Scientific	12066	N/A	2-SNUB-077-5008 2-47B482S0134S	N/A	Removed	No

FORM NIS-2, SUPPLEMENTAL SHEET (Back)

Remarks See Remarks on the back of Page 1.

FORM NIS-2 OWNER'S REPORT FOR REPAIR/REPLACEMENT ACTIVITY
As Required by the Provisions of the ASME Code Section XI

1. Owner Tennessee Valley Authority (TVA) (Name)
1101 Market Street
Chattanooga, TN 37402-2801 (Address)

Date May 15, 2003

Sheet 1 of 2

2. Plant Browns Ferry Nuclear Plant (BFN) (Name)
P. O. Box 2000, Decatur, AL 35609-2000 (Address)

Unit 2

Design Change Notice (DCN) 51246A,
Work Orders (WO) 02-006939-000, -001 and -003
(Repair/Replacement Organization P.O. No., Job No., etc.)

3. Work Performed by TVA-BFN (Name)
P. O. Box 2000, Decatur, AL 35609-2000 (Address)

Type Code Symbol Stamp N/A
Authorization No. N/A
Expiration Date N/A

4. Identification of System System 068, Reactor Recirculation System (ASME Code Class 1 equivalent)

5. (a) Applicable Construction Code (valves) ASME Section III, 1986 Edition (less N-stamp) (piping) USAS B31.1.0 19 67 * Edition, N/A Addenda, N/A Code Case

(b) Applicable Edition of Section XI Utilized for Repairs or Replacements 19 95 Edition, 1996 Addenda

6. Identification of Components

Name of Component	Name of Manufacturer	Manufacturer Serial No.	National Board No.	Other Identification	Year Built	Corrected, Removed, or Installed	ASME Code Stamped (Yes or No)
Recirc Pump A Suction Drain	Hancock 7150W1XMY3	N/A	N/A	2-DRV-068-0505	N/A	Removed	No
Recirc Pump A Suction Drain	FLOWSERVE W0226005	E663-T-1-4	N/A	2-DRV-068-0505	2002	Installed	No
Recirc Pump A Suction Drain	Hancock 7150W1XMY3	N/A	N/A	2-DRV-068-0506	N/A	Removed	No
Recirc Pump A Suction Drain	FLOWSERVE W0226005	E663-T-1-3	N/A	2-DRV-068-0506	2002	Installed	No
Recirc Pump B Suction Drain	Hancock 7150W1XMY3	N/A	N/A	2-DRV-068-0520	N/A	Removed	No
Recirc Pump B Suction Drain	FLOWSERVE W0226005	E663-T-1-1	N/A	2-DRV-068-0520	2002	Installed	No

Identification of Components continued on Page 2

7. Description of Work Replaced four 2" drain valves and piping.

8. Tests Conducted: Hydrostatic ☐ Pneumatic ☐ Nominal Operating Pressure ☒** Exempt ☐
** - Reference Code Case N-416-1.
Other ☐ Pressure N/A psi Test Temp. N/A °F

NOTE: Supplemental Sheets in form of lists, sketches, or drawings may be used, provided (1) size is 8½ in. X 11 in., (2) information in items 1 through 6 on this report is included on each sheet, and (3) each sheet is numbered and the number of sheets is recorded at the top of this form.

*as amended by additional quality assurance requirements found in Contract 1721-00154 and Design Criteria BFN-50-7068 and BFN-50-C-7105.

FORM NIS-2 (Back)

9. Remarks Replaced four 2" drain valves and piping. Reference Code Case N-416-1
Applicable Manufacturer's Data Reports to be attached

CERTIFICATE OF COMPLIANCE

I certify that the statements made in the report are correct and this conforms to the rules of the ASME Code, Section XI.

Type Code Symbol Stamp N/A

Certificate of Authorization No. N/A Expiration Date N/A

Signed Stephen G. Willard, System Engineer Date 5/19, 2003
Owner or Owner's Designee, Title

CERTIFICATE OF INSERVICE INSPECTION

I, the undersigned, holding a valid commission issued by the National Board of Boiler and Pressure Vessel Inspectors and the State or Province of Tennessee and employed by HSB CT of Connecticut have inspected the components described in this Owner's Report during the period 2.6.03 to 3.13.03, and state that to the best of my knowledge and belief, the Owner has performed examinations and taken corrective measures described in this Owner's Report in accordance with the requirements of the ASME Code, Section XI.

By signing this certificate neither the Inspector nor his employer makes any warranty, expressed or implied, concerning the examinations and corrective measures described in this Owner's Report. Furthermore, neither the Inspector nor his employer shall be liable in any manner for any personal injury or property damage or a loss of any kind arising from or connected with this inspection.

Albert Todd
Inspector's Signature

Commissions TN 3135 "A" "B" "I" "N" "NS"
National Board, State, Province, and Endorsements

Date May 23 2003

FORM NIS-2 OWNER'S REPORT FOR REPAIRS/REPLACEMENT ACTIVITY
SUPPLEMENTAL SHEET

1. Owner Tennessee Valley Authority (TVA) (Name)
1101 Market Street
Chattanooga, TN 37402-2801 (Address)

Date May 15, 2003

Sheet 2 of 2

2. Plant Browns Ferry Nuclear Plant (BFN) (Name)
P. O. Box 2000, Decatur, AL 35609-2000 (Address)

Unit 2

Design Change Notice (DCN) 51246A,
Work Orders (WO) 02-006939-000, -001 and -003 (Repair/Replacement Organization P.O. No., Job No., etc.)

3. Work Performed by TVA-BFN (Name)
P. O. Box 2000, Decatur, AL 35609-2000 (Address)

Type Code Symbol Stamp N/A

Authorization No. N/A

Expiration Date N/A

4. Identification of System System 068, Reactor Recirculation System (ASME Code Class 1 equivalent)

5. (a) Applicable Construction Code (valves) ASME Section III, 1986 Edition (less N-stamp) (piping) USAS B31.1.0 19 67 Edition, N/A Addenda, N/A Code Case
(b) Applicable Edition of Section XI Utilized for Repairs or Replacements 19 95, 1996 Addenda

6. Identification of Components

Name of Component	Name of Manufacturer	Manufacturer Serial No.	National Board No.	Other Identification	Year Built	Corrected, Removed, or Installed	ASME Code Stamped (Yes or No)
Recirc Pump B Suction Drain	Hancock 7150W1XMY3	N/A	N/A	2-DRV-068-0521	N/A	Removed	No
Recirc Pump B Suction Drain	FLOWSERVE W0226005	E663-T-1-2	N/A	2-DRV-068-0521	2002	Installed	No
piping	Unknown	N/A	N/A	N/A	N/A	Removed	No
piping	Consolidated Power Supply	N/A	N/A	N/A	N/A	Installed	No

FORM NIS-2, SUPPLEMENTAL SHEET (Back)

Remarks See Remarks on the back of Page 1.

FORM NIS-2 OWNER'S REPORT FOR REPAIR/REPLACEMENT ACTIVITY
As Required by the Provisions of the ASME Code Section XI

1. Owner Tennessee Valley Authority (TVA) (Name)
1101 Market Street
Chattanooga, TN 37402-2801 (Address)

Date May 15, 2003

Sheet 1 of 1

2. Plant Browns Ferry Nuclear Plant (BFN) (Name)
P. O. Box 2000, Decatur, AL 35609-2000 (Address)

Unit 2

Design Change Notice (DCN) 51308A,
Work Order (WO) 02-009276-001
(Repair/Replacement Organization P.O. No., Job No., etc.)

3. Work Performed by TVA-BFN (Name)
P. O. Box 2000, Decatur, AL 35609-2000 (Address)

Type Code Symbol Stamp N/A
Authorization No. N/A
Expiration Date N/A

4. Identification of System System 068, Reactor Recirculation System (ASME Code Class 1 equivalent)

5. (a) Applicable Construction Code USAS B31.1.0 19 67 * Edition, N/A Addenda, N/A Code Case

(b) Applicable Edition of Section XI Utilized for Repairs or Replacements 19 95 Edition, 1996 Addenda

6. Identification of Components

Name of Component	Name of Manufacturer	Manufacturer Serial No.	National Board No.	Other Identification	Year Built	Corrected, Removed, or Installed	ASME Code Stamped (Yes or No)
Strain Gauge	HITEC Products Inc NBW2-35-125-9-20F6-FB-FSM	N/A	N/A	N/A	N/A	Installed	No
Strain Gauge	HITEC Products Inc NBW2-35-125-9-20F6-FB-FSM	N/A	N/A	N/A	N/A	Installed	No
Strain Gauge	HITEC Products Inc NBW2-35-125-9-20F6-FB-FSM	N/A	N/A	N/A	N/A	Installed	No
Strain Gauge	HITEC Products Inc NBW2-35-125-9-20F6-FB-FSM	N/A	N/A	N/A	N/A	Installed	No

7. Description of Work Installed four strain gauges on Recirc piping.

8. Tests Conducted: Hydrostatic ☐ Pneumatic ☐ Nominal Operating Pressure ☐ Exempt ☒**
** - welding did not penetrate pressure boundary.
Other ☐ Pressure N/A psi Test Temp. N/A °F

NOTE: Supplemental Sheets in form of lists, sketches, or drawings may be used, provided (1) size is 8½ in. X 11 in., (2) information in items 1 through 6 on this report is included on each sheet, and (3) each sheet is numbered and the number of sheets is recorded at the top of this form.

*as amended by additional quality assurance requirements found in DCN 51308A and Design Criteria BFN-50-7068 and BFN-50-C-7105.

FORM NIS-2 (Back)

9. Remarks Installed four strain gauges on Recirc piping. Welding did not penetrate the pressure boundary therefore this activity was exempt
Applicable Manufacturer's Data Reports to be attached
from a hydrostatic pressure however this piping was examined during the Class 1 Primary System Pressure Test at the end of the U2C12 refueling outage.

CERTIFICATE OF COMPLIANCE

I certify that the statements made in the report are correct and this conforms to the rules of the ASME Code, Section XI.

Type Code Symbol Stamp N/A

Certificate of Authorization No. N/A Expiration Date N/A

Signed [signature] System Engineer Date 5/19, 2003
Owner or Owner's Designee, Title

CERTIFICATE OF INSERVICE INSPECTION

I, the undersigned, holding a valid commission issued by the National Board of Boiler and Pressure Vessel Inspectors and the State or Province of Tennessee and employed by HSB CT of Connecticut have inspected the components described in this Owner's Report during the period ~~[illegible]~~ 9/24/03 to 3-9-03, and state that to the best of my knowledge and belief, the Owner has performed examinations and taken corrective measures described in this Owner's Report in accordance with the requirements of the ASME Code, Section XI.

By signing this certificate neither the Inspector nor his employer makes any warranty, expressed or implied, concerning the examinations and corrective measures described in this Owner's Report. Furthermore, neither the Inspector nor his employer shall be liable in any manner for any personal injury or property damage or a loss of any kind arising from or connected with this inspection.

[signature] Commissions TN 3135 "A" "B" "J" "N" "NS"
Inspector's Signature National Board, State, Province, and Endorsements

Date May 23 2003

FORM NIS-2 OWNER'S REPORT FOR REPAIR/REPLACEMENT ACTIVITY
As Required by the Provisions of the ASME Code Section XI

1. Owner Tennessee Valley Authority (TVA) (Name) — Date May 13, 2003
   1101 Market Street
   Chattanooga, TN 37402-2801 (Address) — Sheet 1 of 2

2. Plant Browns Ferry Nuclear Plant (BFN) (Name) — Unit 2
   P. O. Box 2000, Decatur, AL 35609-2000 (Address)
   Work Orders (WO) 02-009284-002, 02-009284-003 and 02-009284-009
   Design Change Notice (DCN) 50729 Stage 1 (Repair/Replacement Organization P.O. No., Job No., etc.)

3. Work Performed by TVA-BFN (Name) — Type Code Symbol Stamp N/A
   P. O. Box 2000, Decatur, AL 35609-2000 (Address) — Authorization No. N/A
   Expiration Date N/A

4. Identification of System System 085, Control Rod Drive System (ASME Code Class 2 equivalent)

5. (a) Applicable Construction Code (valves) ASME Sec. III 1989 Edition (less N-stamp) (piping) USAS B31.1.0 19 67 * Edition, N/A Addenda, N/A Code Case

   (b) Applicable Edition of Section XI Utilized for Repairs or Replacements 19 95 Edition, 1996 Addenda

6. Identification of Components

Name of Component	Name of Manufacturer	Manufacturer Serial No.	National Board No.	Other Identification	Year Built	Corrected, Removed, or Installed	ASME Code Stamped (Yes or No)
Root Valve to LS-85-45D (Bottom)	Kerotest	HAA 24-21	N/A	2-RTV-085-0277	N/A	Removed	No
Root Valve to LS-85-45D (Bottom)	Dresser/Hancock 2"-950W-3-XNC049	H594AAD	N/A	2-RTV-085-0277	1978	Installed	No
Root Valve to LS-85-45C (Bottom)	Kerotest	HAA 28-18	N/A	2-RTV-085-0278	N/A	Removed	No
Root Valve to LS-85-45C (Bottom)	Dresser/Hancock 2"-950W-3-XNC049	H572AAD	N/A	2-RTV-085-0278	1978	Installed	No
See Sheet 2 for continuation of component listing							

7. Description of Work Replaced valves and piping on inlet side of level switches with larger diameter components

8. Tests Conducted: Hydrostatic ☐ Pneumatic ☐ Nominal Operating Pressure ☒** Exempt ☐
   ** - Reference Code Case N-416-1
   Other ☐ Pressure N/A psi Test Temp. N/A °F

NOTE: Supplemental Sheets in form of lists, sketches, or drawings may be used, provided (1) size is 8½ in. X 11 in., (2) information in items 1 through 6 on this report is included on each sheet, and (3) each sheet is numbered and the number of sheets is recorded at the top of this form.

*as amended by additional quality assurance requirements found in Contract 68C37-91602 and Design Criteria BFN-50-7085 and BFN-50-C-7105.

FORM NIS-2 (Back)

9. Remarks Replaced valves and piping on inlet side of level switches 2-LS-085-45C, -45D, -45E and -45F with larger diameter components.
Applicable Manufacturer's Data Reports to be attached

CERTIFICATE OF COMPLIANCE

I certify that the statements made in the report are correct and this conforms to the rules of the ASME Code, Section XI.

Type Code Symbol Stamp N/A

Certificate of Authorization No. N/A Expiration Date N/A

Signed Stephen C. Willard, System Engineer Date 5/19, 2003
Owner or Owner's Designee, Title

CERTIFICATE OF INSERVICE INSPECTION

I, the undersigned, holding a valid commission issued by the National Board of Boiler and Pressure Vessel Inspectors and the State or Province of Tennessee and employed by HSB CT of Connecticut have inspected the components described in this Owner's Report during the period 12-20-02 to 3-13-03, and state that to the best of my knowledge and belief, the Owner has performed examinations and taken corrective measures described in this Owner's Report in accordance with the requirements of the ASME Code, Section XI.

By signing this certificate neither the Inspector nor his employer makes any warranty, expressed or implied, concerning the examinations and corrective measures described in this Owner's Report. Furthermore, neither the Inspector nor his employer shall be liable in any manner for any personal injury or property damage or a loss of any kind arising from or connected with this inspection.

Albert Ladd
Inspector's Signature

Commissions TN3130 "A" "B" "I" "N" "NS"
National Board, State, Province, and Endorsements

Date May 22 2002

FORM NIS-2 OWNER'S REPORT FOR REPAIRS/REPLACEMENT ACTIVITY
SUPPLEMENTAL SHEET

1. Owner Tennessee Valley Authority (TVA) (Name)
1101 Market Street
Chattanooga, TN 37402-2801 (Address)

Date May 13, 2003

Sheet 2 of 2

2. Plant Browns Ferry Nuclear Plant (BFN) (Name)
P. O. Box 2000, Decatur, AL 35609-2000 (Address)

Unit 2

Work Orders (WO) 02-009284-002, 02-009284-003 and 02-009284-009
Design Change Notice (DCN) 50729 Stage 1
(Repair/Replacement Organization P.O. No., Job No., etc.)

3. Work Performed by TVA-BFN (Name)
P. O. Box 2000, Decatur, AL 35609-2000 (Address)

Type Code Symbol Stamp N/A
Authorization No. N/A
Expiration Date N/A

4. Identification of System System 085, Control Rod Drive System (ASME Code Class 2 equivalent) (valves) ASME Sec. III 1989 Edition (less N-stamp)

5. (a) Applicable Construction Code (piping) USAS B31.1.0 19 67 * Edition, N/A Addenda, N/A Code Case
(b) Applicable Edition of Section XI Utilized for Repairs or Replacements 19 95, 1996 Addenda

6. Identification of Components

Name of Component	Name of Manufacturer	Manufacturer Serial No.	National Board No.	Other Identification	Year Built	Corrected, Removed, or Installed	ASME Code Stamped (Yes or No)
Root Valve to LS-85-45E (Bottom)	Kerotest	HAA 23-18	N/A	2-RTV-085-0286	N/A	Removed	No
Root Valve to LS-85-45E (Bottom)	Dresser/Hancock 2"-950W-3-XNC049	H553AAD	N/A	2-RTV-085-0286	1978	Installed	No
Root Valve to LS-85-45F (Bottom)	Kerotest	HAA 27-3	N/A	2-RTV-085-0288	N/A	Removed	No
Root Valve to LS-85-45F (Bottom)	Dresser/Hancock 2"-950W-3-XNC049	H554AAD	N/A	2-RTV-085-0288	1978	Installed	No
Piping	Unknown	N/A	N/A	N/A	N/A	Removed	No
Piping	Consolidated Power Supply	N/A	N/A	N/A	N/A	Installed	No

FORM NIS-2, SUPPLEMENTAL SHEET (Back)

Remarks See Remarks on the back of Page 1.