NUREG-0619-REV-1

BWR FEEDWATER NOZZLE AND CONTROL ROD DRIVE RETURN LINE NOZZLE CRACKING: RESOLUTION OF GENERIC TECHNICAL ACTIVITY A-10 (TECHNICAL REPORT)

R. Snaider

Nuclear Regulatory Commission
Washington, D. C.

NOV 80

U.S. Department of Commerce
National Technical Information Service

NRC FORM 335 (7-77)

U.S. NUCLEAR REGULATORY COMMISSION

BIBLIOGRAPHIC DATA SHEET

1. REPORT NUMBER (Assigned by DDC): NUREG-0619

4. TITLE AND SUBTITLE (Add Volume No., if appropriate): BWR Feedwater Nozzle and Control Rod Drive Return Line Nozzle Cracking

2. (Leave blank)

3. RECIPIENT'S ACCESSION NO.

7. AUTHOR(S): A-10 Task Group

5. DATE REPORT COMPLETED: MONTH October, YEAR 1980

9. PERFORMING ORGANIZATION NAME AND MAILING ADDRESS (Include Zip Code):
Office of Nuclear Reactor Regulation
U.S. Nuclear Regulatory Commission
Washington, DC 20555

DATE REPORT ISSUED: MONTH November, YEAR 1980

6. (Leave blank)

8. (Leave blank)

12. SPONSORING ORGANIZATION NAME AND MAILING ADDRESS (Include Zip Code):
Office of Nuclear Reactor Regulation
U. S. Nuclear Regulatory Commission
Washington, DC 20555

10. PROJECT/TASK/WORK UNIT NO.

11. CONTRACT NO.

13. TYPE OF REPORT: Technical Report

PERIOD COVERED (Inclusive dates)

15. SUPPLEMENTARY NOTES

14. (Leave blank)

16. ABSTRACT (200 words or less)

This report summarizes work performed by the NRC staff in the resolution of Generic Technical Activity A-10, "BWR Nozzle Cracking". Generic Technical Activity A-10 is one of the generic technical subjects designated as "unresolved safety issues" pursuant to Section 210 of the Energy Reorganization Act of 1974.

The report describes the technical issues, the technical studies and analyses performed by the General Electric Company and the NRC staff, the staff's technical positions based on these studies, and the staff's plans for continued implementation of its technical positions. It also provides information for further work to resolve the non-destructive examination issue.

Public comments received in response to the "For Comment" edition of NUREG-0619, issued in April 1980, have been incorporated where applicable. Appendix E of the report discusses the comments and the staff's disposition of these comments.

17. KEY WORDS AND DOCUMENT ANALYSIS

17a. DESCRIPTORS

BWR nozzle cracking, feedwater nozzle, control rod drive return line nozzle, single-sleeve piston-ring sparger, triple-sleeve piston-ring sparger.

17b. IDENTIFIERS/OPEN-ENDED TERMS

18. AVAILABILITY STATEMENT: Unlimited

19. SECURITY CLASS (This report): Unclassified

20. SECURITY CLASS (This page): Unclassified

21. NO OF PAGES

22. PRICE: $

NRC FORM 335 (7-77)

UNITED STATES
NUCLEAR REGULATORY COMMISSION
WASHINGTON, D. C. 20555

NOV 13 1980

Licensee:

Attached for your implementation is the revised and final edition of NUREG-0619, "BWR Feedwater Nozzle and Control Rod Drive Return Line Nozzle Cracking." The report provides the staff's resolution of the NRC's Generic Technical Activity A-10, which is an "Unresolved Safety Issue" pursuant to Section 210 of the Energy Reorganization Act of 1974. Public comments received in response to the "For Comment" edition of April 1980, have been incorporated where applicable. Appendix E of NUREG-0619 discusses the comments and the staff's disposition of these comments.

The generic study resulted from the inservice discovery of cracking in feedwater nozzles and control rod drive return line nozzles.

NUREG-0619 describes the technical issues, the technical studies and analyses performed by the General Electric Company and the NRC staff, the staff's technical positions based on these studies, and the staff's requirements for licensee and applicant implementation of the technical positions.

It is expected that requirements contained in the NUREG will be met. Accordingly, pursuant to §50.54(f) operating reactor licensees are requested to furnish, within forty-five (45) days of this letter, confirmation that the implementation dates indicated in NUREG-0619 will be met. For any date that cannot be met, furnish a proposed revised date, justification for the delay, and any planned compensating safety actions during the interim. After our evaluation of your response the NRC staff will take action, as necessary to assure that such requirements and commitments are appropriately enforceable. This may include, as needed, issuance of a Confirmatory or Show-Cause Order.

Because of the importance of resolving this issue, plants undergoing Systematic Evaluation Program (SEP) review will be required to implement changes in the same time frame as non-SEP plants.

Sincerely,

Darrell G. Eisenhut, Director
Division of Licensing
Office of Nuclear Reactor Regulation

cc: Service List

NUREG-0619-REV-1

NUREG-0619-REV

BWR Feedwater Nozzle and Control Rod Drive Return Line Nozzle Cracking

Resolution of Generic Technical Activity A-10

R. Snaider, Task Manager

Office of Nuclear Reactor Regulation

U.S. Nuclear Regulatory Commission

REPRODUCED BY
NATIONAL TECHNICAL
INFORMATION SERVICE

Available from

GPO Sales Program
Division of Technical Information and Document Control
U.S. Nuclear Regulatory Commission
Washington, D.C. 20555

and

National Technical Information Service
Springfield, Virginia 22161

NUREG-0619

BWR Feedwater Nozzle and Control Rod Drive Return Line Nozzle Cracking

Resolution of Generic Technical Activity A-10

Manuscript Completed: October 1980
Date Published: November 1980

R. Snaider, Task Manager

Office of Nuclear Reactor Regulation
U.S. Nuclear Regulatory Commission
Washington, D.C. 20555

ABSTRACT

This report summarizes work performed by the Nuclear Regulatory Commission staff to resolve Generic Technical Activity A-10, "BWR Nozzle Cracking." Generic Technical Activity A-10 is one of the generic technical subjects designated as "Unresolved Safety Issues" pursuant to Section 210 of the Energy Reorganization Act of 1974, and as such was discussed in Chapter 2 of the 1978 NRC Annual Report and Chapter 3 of the 1979 NRC Annual Report.

This report describes the technical issues, the independent technical evaluations performed by the staff and the General Electric Company (GE), and the staff's technical positions and plans for continued implementation of the technical positions. (Implementation has begun on several operating BWRs and on BWRs under construction.)

With regard to feedwater nozzle cracking, the staff has concluded the following:

(1) The BWR feedwater nozzle cracking phenomenon is now sufficiently understood to permit a quantitative evaluation of the proposed solutions.

(2) The proposed solutions (clad removal, installation of a modified sparger, changes to operating procedures, and feedwater system modifications when necessary) permit an extension of the required inspection intervals beyond those specified in the NRC interim guidance document NUREG-0312.

(3) The use of interference fit spargers and the attendant frequent dye-penetrant inspections will no longer be permissible after June 30, 1983.

(4) A new addition to the inservice inspection program is leak determination that will verify the integrity of the thermal-sleeve-to-vessel seal or weld. Leak determination procedures are not yet standardized by licensees.

(5) Ultrasonic test (UT) procedures require further development before ultrasonic testing can become the primary means of nozzle inspection.

With regard to the issue of control rod drive return line nozzle cracking, the staff has concluded that the major determinant is the amount of water that can be returned to the vessel through the proposed system modifications. Hence, we will presently allow only certain classes of operating reactors (depending on vessel size and design type and on demonstration of return flow capability) to implement the recommended GE solution involving return line removal without rerouting of the line. Until other licensees can demonstrate by analysis and plant-specific testing that system operation is satisfactory and that sufficient return flow to the vessel is available, operation with either the return line valved out of service or rerouted will be required. Only Nine Mile Point, which uses a welded thermal sleeve, and Oyster Creek, which uses a rolled-in sleeve design with partial welding, will be allowed to operate in their present configurations.

BWRs under construction either have been designed without the return line or have removed the return line as a solution to the nozzle cracking problem. The staff has concurred with this action plan, but has required plant-specific testing to assure proper system operation and return flow capacity.

This report supersedes in its entirety the previously issued NRC report, NUREG-0312, "Interim Technical Report on Feedwater and Control Rod Drive Return Line Nozzle Cracking" (Ref. 1). It also supersedes the "for comment" version of NUREG-0619, dated April 1980. Public comments received were reviewed and are discussed in Appendix E. Changes made in response to these comments are noted throughout the text by marginal lines.

CONTENTS

	Page
ABSTRACT	iii
ABBREVIATIONS	vii
PART I - FEEDWATER NOZZLES	1
1 INTRODUCTION AND STATEMENT OF PROBLEM	1
1.1 General	1
1.2 Background and Statement of Problem	1
1.3 Staff Approach to Review and Staff Conclusions	5
2 CAUSES OF PROBLEMS	11
2.1 Vibration	11
2.2 Thermal Fatigue and Crack Initiation	11
2.3 Crack Propagation	11
2.4 Effect of System Operation	12
3 DESCRIPTION OF SOLUTIONS	13
3.1 New and Improved Spargers and Thermal Sleeves	13
3.2 Clad Removal	13
3.3 Systems Modifications and Procedural Changes	14
4 STAFF POSITIONS AND IMPLEMENTATION	15
4.1 Sparger and Thermal-Sleeve-Design Modifications	15
4.2 Systems Modifications and Operating Procedures	16
4.3 Inspections	16
4.4 Implementation	20
PART II - CONTROL ROD DRIVE RETURN LINE NOZZLES	23
5 INTRODUCTION AND STATEMENT OF PROBLEM	23
6 CAUSES OF PROBLEM	26
7 SOLUTIONS	27
7.1 Nozzle Repair	27
7.2 Alternative Solutions Proposed by GE	27
7.3 Return Flow to Vessel	28
7.4 CRD System Operability	30

CONTENTS (Continued)

		Page
8	STAFF POSITIONS AND IMPLEMENTATION	31
	8.1 Acceptability of Alternatives Proposed by GE	31
	8.2 Required Modification, Testing, and Maintenance of CRD System	32
	8.3 Staff Conclusions and Position on Implementation	34
REFERENCES		35
APPENDIX A	NRC A-10 TASK GROUP	A-1
APPENDIX B	TASK ACTION PLAN A-10, BWR NOZZLE CRACKING	B-1
APPENDIX C	NRC EVALUATION OF GE TOPICAL REPORT NEDE-21821-02	C-1
APPENDIX D	NRC EVALUATION OF GE PROPOSED CRDRL ALTERNATIVE SOLUTIONS	D-1
APPENDIX E	RESOLUTION OF COMMENTS ADDRESSING THE "FOR COMMENT" VERSION OF NUREG-0619	E-1

LIST OF FIGURES

1.	Typical example of cracks on a feedwater nozzle blend radius, revealed by dye-penetrant testing	2
2.	Typical example of cracks on a feedwater nozzle bore, revealed by dye-penetrant testing	3
3.	Typical reactor vessel internal components	4
4.	Feedwater spargers showing old and new designs	6
5.	Loose-fit sparger problems	7
6.	Typical BWR CRD hydraulic return line nozzle (does not show thermal sleeve/flow shroud)	24

LIST OF TABLES

1.	Summary of BWR feedwater nozzle cracking problems and solutions	8
2.	Routine inspection intervals	18
3.	CRDRL nozzle examination results	25

ABBREVIATIONS

ASME	American Society of Mechanical Engineers
ASTM	American Society for the Testing of Materials
BWR	boiling water reactor
CECO	Commonwealth Edison Company
CRD	control rod drive
CRDRL	control rod drive return line
DOR	Division of Operating Reactors
EPRI	Electric Power Research Institute
GE	General Electric Company
HCU	hydraulic control unit
HPCI	high pressure coolant injection
HSST	heavy section steel technology
ID	inside diameter
IE	Office of Inspection and Enforcement
IGSCC	intergranular stress corrosion cracking
ISI	inservice inspection
LEFM	linear elastic fracture mechanics
LILCO	Long Island Lighting Company
NDE	nondestructive examination
NRC	U.S. Nuclear Regulatory Commission
NRR	Office of Nuclear Reactor Regulation
NSP	Northern States Power Company
OL	operating license
PT	dye-penetrant examination
RES	Office of Nuclear Regulatory Research
RWCU	reactor water cleanup
UT	ultrasonic test

BWR FEEDWATER NOZZLE AND CONTROL ROD DRIVE RETURN LINE NOZZLE CRACKING, RESOLUTION OF GENERIC TECHNICAL ACTIVITY A-10

PART I - FEEDWATER NOZZLES

1 INTRODUCTION AND STATEMENT OF PROBLEM

1.1 General

Over the past several years, inspections at 22 of the 23 boiling water reactor (BWR) plants in the United States that have feedwater nozzle/sparger systems have disclosed some degree of cracking in the feedwater nozzles of the reactor vessels at 18 plants. (One plant has not accumulated significant operating time as of the date of this report and has not been inspected.) This cracking is illustrated in Figures 1 and 2. Similar cracking has occurred in BWR control rod drive return line nozzles and is the subject of Part II of this report. Both issues are considered by the staff to be satisfactorily resolved, with the exception of the development of improved nondestructive examination (NDE) techniques. Generic technical activity A-10 is completed.

Part I summarizes the NRC staff review (as part of the Generic Technical Activity A-10, an Unresolved Safety Issue) of the causes of feedwater nozzle cracking and associated problems with the feedwater sparger, the testing and analysis that verify the effectiveness of the proposed solutions, and the staff's conclusions and plans for implementation.

1.2 Background and Statement of Problem

Most BWR pressure vessels have four feedwater nozzles. Several vessels have six such nozzles and one vessel has only one nozzle. Three older plants do not have feedwater nozzles per se and are not considered in this document. Nozzle diameter is 10 to 12 inches, depending on plant design. Figure 3 is a cutaway diagram of a typical reactor vessel and shows the internal components.

The feedwater is distributed through spargers that deliver the flow evenly to assure proper jet pump subcooling and help maintain proper core power distribution. An essential part of the sparger is the thermal sleeve, which projects into the nozzle bore and is intended to prevent the impingement of cold feedwater on the hot nozzle surface. This surface is usually heated to essentially reactor water temperature by the returning water from the steam separators and steam dryers. However, bypass leakage past the thermal sleeves allowed relatively cold feedwater to impinge on the hot nozzles. The feedwater, when heated during power operation by extraction steam from the main turbine, is typically about 100°F to 200°F colder (depending on reactor design) than the reactor water. When the feedwater heaters are not in service, as during startups and shutdowns, the differential could be equal to or greater than 400°F. The bypass leakage past a loose thermal sleeve caused a fluctuation (at times severe) in the metal temperature of the feedwater nozzle and resulted

Figure 1. Typical example of cracks on a feedwater nozzle blend radius, revealed by dye-penetrant testing.

Figure 2. Typical example of cracks on a feedwater nozzle bore, revealed by dye-penetrant testing.

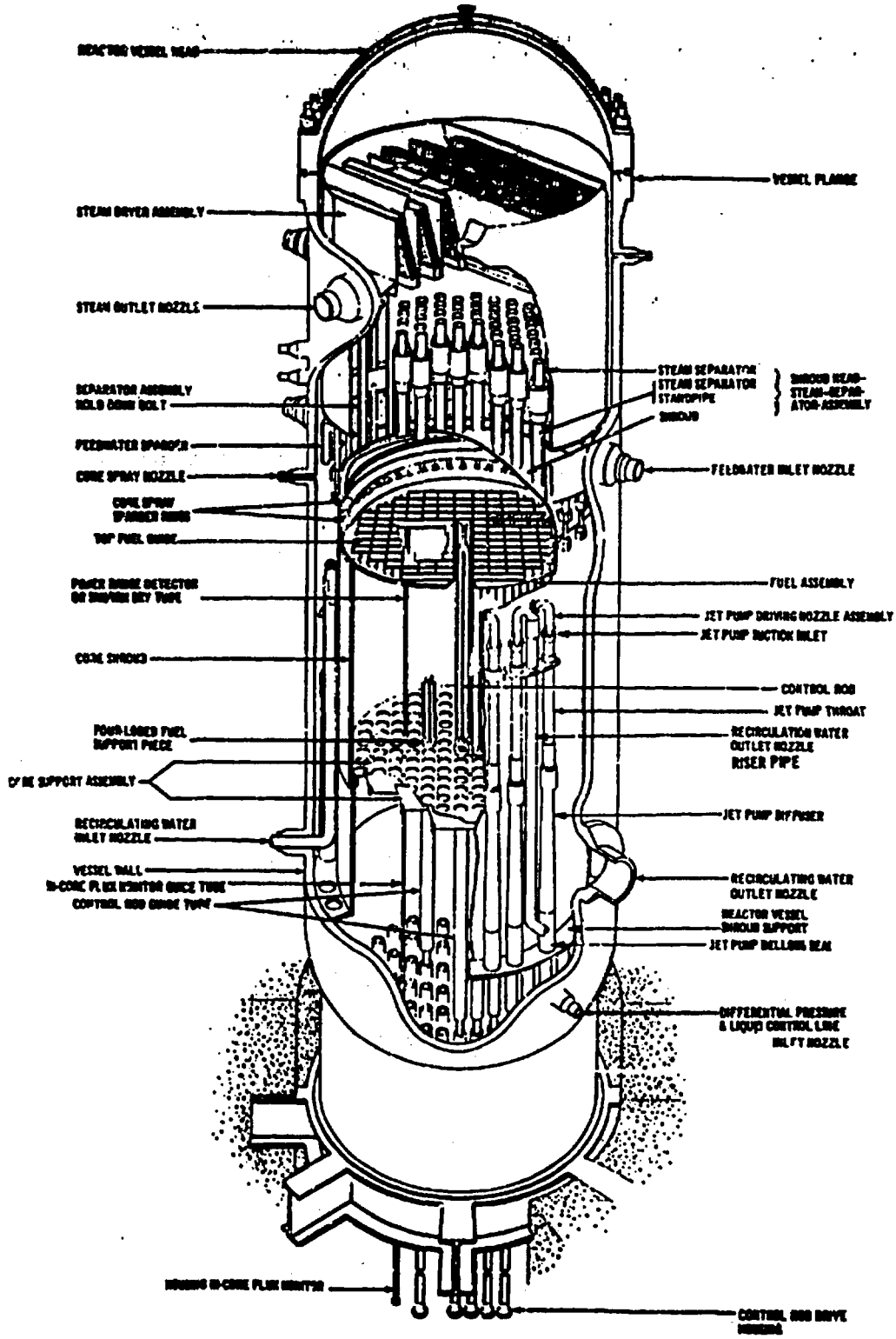

Figure 3. Typical reactor vessel internal components.

in metal fatigue and crack initiation. The cracks were then driven deeper by the larger temperature and pressure cycles associated with startups, shutdowns, and certain operational transients.

Figure 4 shows the old sparger design and some of the designs that replaced it. The tight-fit, forged-tee design is used predominantly today as an interim measure until the installation of the modified triple-sleeve spargers or other acceptable designs. The triple-sleeve sparger design is depicted in the proprietary General Electric (GE) document NEDE-21821-A. Several plants have the welded thermal sleeve design.

Figure 5 illustrates the problems that have resulted from the loose fit of the thermal sleeve. The staff believes the new designs provide a substantial and acceptable improvement over previous designs and should resolve these problems.

The feedwater nozzles form a second barrier (after the fuel cladding and as part of the reactor coolant pressure boundary) to the release of radioactive fission products. All repaired feedwater nozzles to date have met the requirements and limits of the American Society of Mechanical Engineers (ASME) Boiler and Pressure Vessel Code. No additional action was necessary since only relatively small amounts of base metal have been removed by repair operations. The removal of cladding, as a means of minimizing crack initiation, has not altered the safety margins because the clad thickness is not considered in ASME Code reinforcement requirements.

Nozzle cracking is potentially serious for the following reasons:

(1) Excessive crack growth could lead to reduction of pressure vessel safety margins.

(2) The design safety margin could also be reduced by excessive removal of nozzle reinforcement metal when cracks are removed by grinding.

(3) The exposure to radiation of the personnel performing inspection and repair tasks can be considerable.

(4) The repair of these kinds of cracks can result in considerable shutdown time at the affected plant(s).

Table 1 presents a summary overview of the U.S. BWR nozzle cracking problem. The substitution of tight-fitting, interference-fit spargers and increased licensee attention to proper feedwater control has significantly reduced the incidence of cracking in recent years.

1.3 Staff Approach to Review and Staff Conclusions

A task group of personnel in the Office of Nuclear Reactor Regulation was formed to assess the problem and determine acceptable solutions when it became apparent that the cracking problem was widespread and could result in decreased safety margins. This issue subsequently became Generic Technical Activity A-10 and was initially reported to Congress as an "Unresolved Safety Issue" in the 1978 NRC Annual Report. The members of the task group are listed in Appendix A. The latest Task Action Plan that presented the NRC staff's review plans is included as Appendix B.

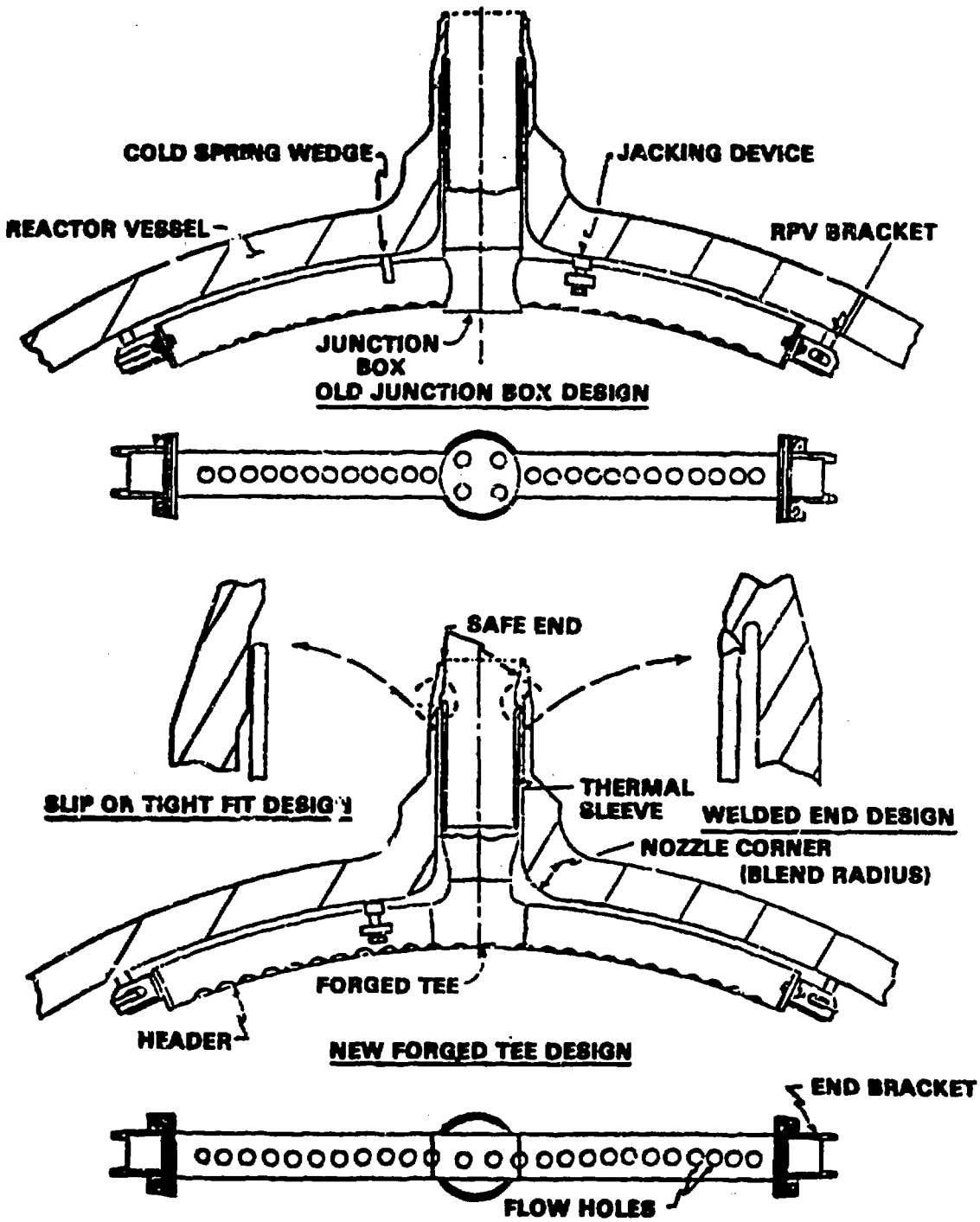

Figure 4. Feedwater spargers showing old and new designs.

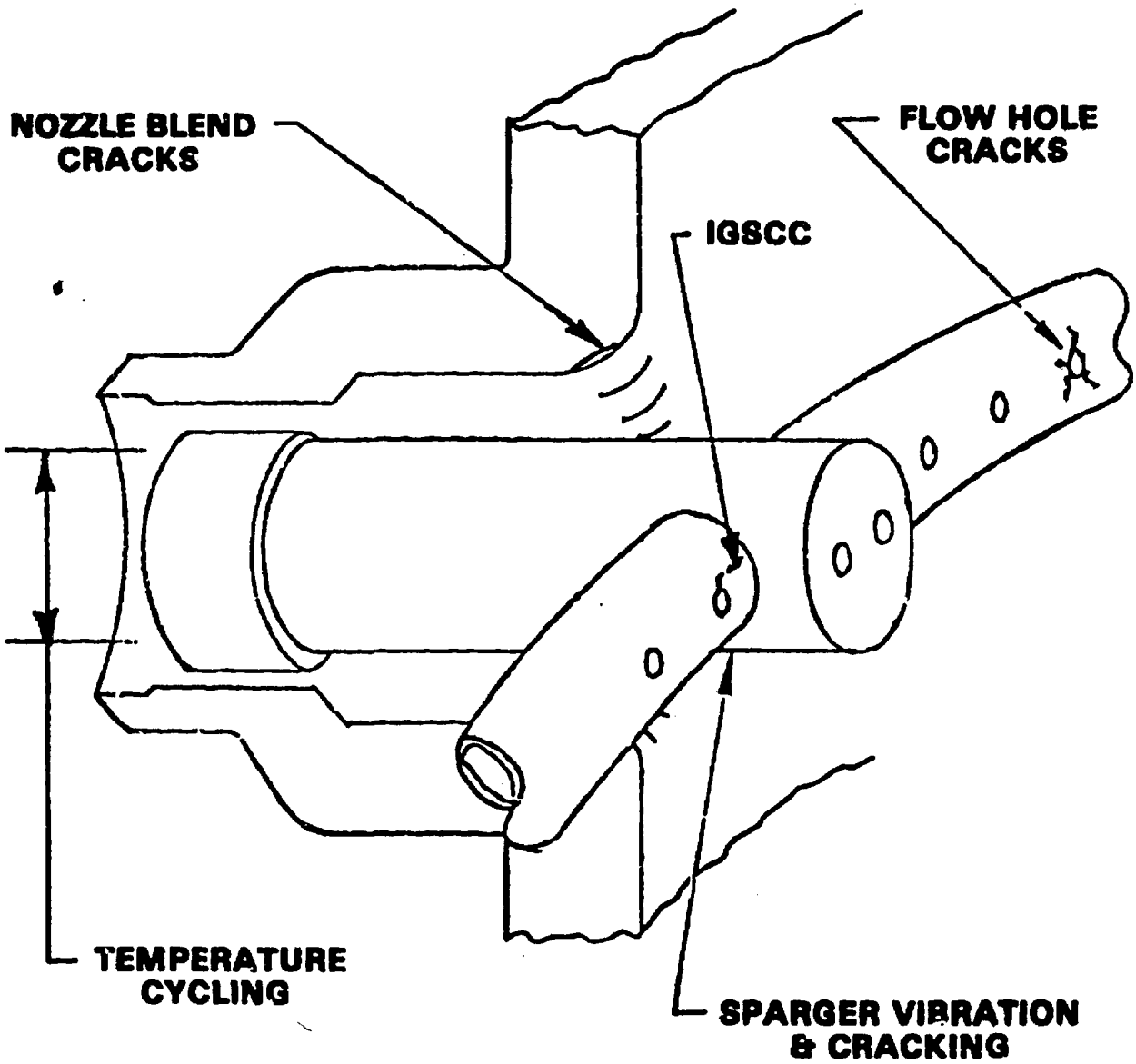

Figure 5. Loose-fit sparger problems.

Table 1. Summary of BWR Feedwater Nozzle Cracking Problems and Solutions

Plant	First Operation	Start-ups	Feedwater Nozzle Inspection	Action Taken	Greatest Total Crack Depth, In.*
Humboldt Bay	4/63	110	1976 (TV), 1977	Install new sparger, remachine nozzle	0.75
Nine Mile Point 1	11/69	109	1976 (UT), 1977	Remachine 4 nozzles, install 4 new spargers	1.50
Oyster Creek	9/69	97	1976 (UT), 1977	Remachine 4 nozzles, install 4 new spargers	0.50
Dresden 2	4/70	125	1975, 1976	Grind out cracks, replace spargers	0.50
Millstone 1	11/70	134	1974, 1975, 1976	Grind out cracks, replace spargers	0.55
Dresden 3	7/71	93	1975	Grind out cracks, replace spargers	0.38
Monticello	3/71	91	1975	Grind out cracks, replace spargers	0.50
			1977	Remove clad, install single-sleeve, single-piston-ring spargers	
Quad Cities 1	4/72	112	1976	Grind out cracks, replace spargers	0.40
Browns Ferry 1	10/73	68	1975	Grind out cracks, replace spargers	0.16
			1977	Remove clad, install single-sleeve, single-piston-ring spargers	
Browns Ferry 2	8/75	36	1975	Repair spargers, no nozzle cracks	0.03
			1978	Remove clad, install double-piston-ring, triple-thermal-sleeve spargers	
Quad Cities 2	5/72	102	1975	Grind out cracks, replace spargers	0.38
			1980	Remove clad, install double-piston ring, triple-thermal-sleeve spargers	
Vermont Yankee	9/72	61	1975	Grind out cracks, replace spargers	0.35

*Including clad.

Table 1 (Continued)

Plant	First Operation	Start-ups	Feedwater Nozzle Inspection	Action Taken	Greatest Total Crack Depth, In.*
Peach Bottom 2	2/74	65	1976, 1977	Grind out cracks, replace spargers	0.38
			1980	Remove clad, install double-piston-ring, triple-thermal-sleeve spargers	
Peach Bottom 3	9/74	46	1977	Grind out cracks	0.04
Cooper	5/74	55	1976	Grind out cracks, replace spargers	0.18
			1980	Remove clad, install doble-piston-ring, triple-thermal-sleeve spargers	
Pilgrim	7/72	69	1976	Grind out cracks, replace spargers	0.75
			1980	Remove clad, install double-piston-ring, triple-thermal-sleeve spargers	
Edwin I. Hatch 1	11/74	85	1977	Grind out cracks	0.04
			1979	Remove clad, install double-piston-ring, triple-thermal-sleeve spargers	
Duane Arnold (welded sleeve)	5/74	57	1977 (UT)	None	
James A. FitzPatrick			1978	Remove clad, install double-piston-ring, triple-thermal-sleeve spargers	
Browns Ferry 3			1979	Remove clad, install double-piston-ring, triple-thermal-sleeve spargers	

*Including clad.

The staff performed an independent review of the nozzle cracking problem and evaluated the GE test data for confirmation of the causes of cracking and the resultant solutions. The review included examination of the causes of, and solutions for, several other problems that accompanied the nozzle cracking, including sparger arm cracking and sparger discharge hole cracking.

General Electric's extensive feedwater nozzle/sparger testing and analysis program and the results of this program were reported to the staff in several documents. The final document, which incorporates the information from all earlier submittals, is topical report NEDE-21821-A (BWR Feedwater Nozzle/ Sparger Final Report, February 1980). This document superseded NEDE-21821-02, which was the subject of the safety evaluation of Appendix C to this NUREG. NEDE-21821-A incorporates the Appendix C safety evaluation into NEDE-21821-02. The Appendix C safety evaluation documents the staff's detailed review of NEDE-21821-02 and permits, with few exceptions, the use of NEDE-21821-02 (and thus now NEDE-21821-A in its place) as a reference document in licensing actions involving BWR feedwater nozzles. NEDE-21821-A is a proprietary document, but its non-proprietary counterpart, NEDO-21821-A, is available to the public at the NRC Public Document Room.

The remainder of Part I of this document is devoted to detailed discussions of the causes of the various feedwater nozzle and sparger problems, their solutions, the applicable staff conclusions, positions, and requirements regarding implementation of positions. This report documents the staff conclusion that the GE triple-sleeve sparger modification, when combined with removal of stainless steel cladding, feedwater system modifications when necessary, and changes to operating procedures, provides a substantial and acceptable improvement over previous designs. However, the staff recognizes that the GE design is not the only effective sparger modification. Another design has already been approved for use at two operating reactors. In any case, a reactor vessel modified with an improved sparger and other physical and procedural changes being incorporated as necessary, should be able to operate for an extended period of time between in-vessel nozzle surface examinations.

As discussed in Section 6.0 of Appendix C, the issue of NDE will require continuing effort of the staff and various industry groups. The industry efforts, which the staff will review, are directed toward the development of UT procedures that will find and characterize tight fatigue cracks in the complex geometries and long examination metal paths of BWR feedwater nozzles. Until the NRC staff is assured that such techniques are capable of reliably detecting flaws before they violate ASME Code flaw size and reinforcement limits, we will require in-vessel dye-penetrant surface examinations (PTs). Upon completion of the industry studies mentioned above, the staff will issue further guidance on inservice inspection (ISI) requirements.

2 CAUSES OF PROBLEMS

Appendix C describes in detail the many problems with the original loose-fit GE feedwater sparger design. These problems are briefly outlined below.

2.1 Vibration

Cracking at the junction of the sparger arms and thermal sleeve was discovered during inspection of the loose-fit design and was attributed to vibration induced by water flowing through the gap between the thermal sleeve and the nozzle safe end. Section 4.1 of Appendix C contains the NRC staff's conclusion that the GE triple-sleeve sparger design has acceptably resolved the vibration problem.

2.2 Thermal Fatigue and Crack Initiation

Feedwater nozzles experience thermal stresses because the incoming feedwater (at 340 to 435°F) is colder than that in the reactor vessel (at ~ 545°F) and is much colder (at ~ 100°F) during reactor startup before feedwater heaters are in service and during shutdown after heaters are taken out of service. Turbulent mixing of the hot water returning from the steam separators and dryers and the incoming cold feedwater causes thermal stress cycling of the nozzle bore unless it is thoroughly protected by the sparger thermal sleeve. Bypass leakage past the juncture of the thermal sleeve and nozzle safe end is the primary source of cold water impinging upon the nozzle bore. A secondary source is the layer of water that sheds off after being cooled by contact with the outer surface of the sleeve.

The frequency of significant thermal cycling caused by turbulent mixing was found by testing to range from 0.1 to 1 Hz and the amplitude of such cycling is sufficient to cause high-cycle fatigue crack initiation in less than 3 years' service. From analysis and from experience in repairing feedwater nozzles, it is known that high-cycle thermal fatigue cracks propagate to a depth of about 0.25 inch before the cyclic thermal stress amplitude attenuates to an insignificant level.

Analyses have shown that the presence of stainless steel cladding on nozzle surfaces contributes to the fatigue cracking because thermal stresses from the high-frequency cycling are higher in the stainless steel than they would be in unclad base metal. Also, because of the difference in thermal expansion coefficients of the two metals, low-cycle temperature changes contribute to fatigue.

2.3 Crack Propagation

Stresses of much lower frequency but higher amplitude than those encountered during turbulent mixing are caused by the intermittent flow of cold feedwater into the vessel during startup and shutdown and during hot standby conditions when feedwater is added to maintain reactor water level. The frequency and magnitude of these stresses depend to a large degree on whether such additions are modulated smoothly or are made by an on-off flow control system. Stress cycles also are caused by pressure changes during startup. The large, low-frequency thermal and pressure stresses are additive. Such cycling can propagate any small thermal fatigue cracks deep into the nozzle wall if remedial measures are not taken.

2.4 Effect of System Operation

The GE testing and analysis program found that the method of operation of the feedwater system played an important role in the growth of feedwater nozzle cracks. Also, the present reactor water cleanup (RWCU) system flow, which enters the vessel through only one feedwater nozzle, could be divided so as to enter the vessel through all feedwater nozzles. (The RWCU flow adds heat to the feedwater. This is especially beneficial when the feedwater heaters are not in service.) The result would be a decrease in the crack growth rate.

Early in the staff's review it was discovered that some operators were filling the reactor vessel rapidly with cold feedwater after shutdown. This was done to provide additional shielding and a more comfortable environment for maintenance workers who would enter the vicinity of the vessel soon after the "flood-up" action had been completed. Another deleterious practice by a few licensees was "jogging" (briefly turning on) the feedwater pumps to maintain reactor water level during startups and shutdowns. This practice arose because the feedwater flow control valves functioned poorly at low flow.

To our knowledge, neither of the above practices is in use today at operating reactors. However, system improvements are still needed (see Section 3.3 of Appendix C).

GE has provided recommendations to licensees regarding operation of the feedwater system and related systems to minimize the probability of crack initiation and to minimize the rate of crack growth. The staff concurs with GE and licensee efforts to prevent cracking and subsequent growth and believes that changes in operating procedures form an important part of the overall effort. The objective is to minimize the temperature difference between reactor water and feedwater, and especially to avoid, to the extent practicable, cycling the feedwater flow.

3 DESCRIPTION OF SOLUTIONS

3.1 New and Improved Spargers and Thermal Sleeves

The original loose-fitting spargers are no longer in service, most of them having been replaced by an interim, interference-fit design, and the rest by either a single-piston-ring seal and single sleeve or a double seal with a triple sleeve (the GE-recommended design referred to herein as the triple-sleeve sparger). In three operating reactors and two under operating license review, the thermal sleeves are welded to the nozzle safe end.

Although the interference-fit design can reduce bypass leakage flow, its long-term effectiveness is questionable because the interference may be lost with time. Factors preventing the adoption of the welded design as a general solution were (1) the extreme difficulty and the significant personnel radiation exposure involved in modifying operating reactors, and (2) the almost uninspectable resulting weld geometry. The single-sleeve sparger with a single seal has been approved by the staff where the nozzle could not accept the triple-sleeve design. In the case of Monticello, where this single-sleeve design was used, the licensee has made tentative plans to install new nozzle safe ends that incorporate welded thermal sleeves. The NRC staff has concurred in this approach and will assign inspection requirements based upon its projected effectiveness.

Because of these problems, GE designed the triple-sleeve sparger. The sparger uses three concentric thermal sleeves, the innermost of which conducts feedwater to the sparger arms. The arms are attached to the sleeve by a forged tee, are fastened to the reactor vessel wall at their end points by brackets, and are designed to deliver feedwater uniformly to the annular area between the core shroud and the vessel wall. In so doing, they provide subcooling for the jet pumps and help maintain a uniform core power distribution. The sparger arms were modified to discharge feedwater into the vessel through elbows mounted on top and fitted with converging discharge nozzles. These features reduce temperature stratification in the sparger and flow separation around the periphery of the flow holes at low feedwater flow.

Bypass leakage flow in the feedwater nozzle bore will be reduced substantially by two piston-ring seals and an interference fit. Water leaking past the first seal would pass into the vessel through the annulus between the inner sleeve and the "mid-thermal" sleeve, which is supported at its upstream end by a slotted attachment to the inner sleeve. Attached to the "mid-thermal" sleeve is an outer sleeve that is fitted tightly in the nozzle bore at the upstream end to prevent vibratory motion and fatigue damage of the sparger assembly. The secondary piston-ring seal at that tight interference joint reduces potential bypass flow to nearly zero because the pressure drop is very low across the secondary seal. In addition, the three concentric sleeves will prevent formation of a cold boundary layer of water in the annulus next to the nozzle bore.

3.2 Clad Removal

Stainless steel cladding was originally installed for corrosion protection of the carbon steel vessel and to minimize rust accumulation in the vessel water, but experience has shown that cladding on the feedwater nozzles is unnecessary because the area of exposed base metal is relatively small.

Moreover, there are deleterious effects of nozzle cladding (larger amplitude metal temperature fluctuations than the carbon steel base metal and higher stresses caused by such fluctuations), and the General Electric Company now recommends that at the time new sparger sleeves are installed, the nozzle be bored out to a depth that will expose undamaged base metal. The net effect of clad removal and consequent reduction in thermal stresses is to prolong the time to crack initiation and increase the number of startup/shutdown cycles required to grow fatigue cracks to the limiting depth as specified by the applicable code requirements. The decrease in crack growth rate results from the elimination of stresses due to differential thermal expansion of the stainless steel and carbon steel near the surface. Removing the cladding also facilitates the interpretation of ultrasonic signals.

3.3 Systems Modifications and Procedural Changes

Appendix C includes details of the modifications to fluid systems and operating procedures that GE considered to be beneficial in decreasing the magnitude and frequency of temperature fluctuations and thus preventing crack initiation and limiting crack growth. The staff concurs with GE that changes in addition to those already initiated by licensees and applicants may be necessary to limit crack growth to less than 1 inch in 40 years.. Because crack growth is dependent on feedwater temperature, the extent of proposed changes will depend on plant-specific considerations.

4 STAFF POSITIONS AND IMPLEMENTATION

4.1 Sparger and Thermal-Sleeve-Design Modifications

In reviewing postmodification submittals regarding feedwater sparger thermal-sleeve modifications, the NRC staff will require that the predicted occurrence of cracking in the nozzle bore and blend radius be low enough to assure the NRC goal of long-term operation without significant crack growth (i.e., low relative to that observed for loose-fit spargers). The prediction may be based on experience or analysis or both. Conversely, continued reliance on dye-penetrant inspection and grinding repair operations to prevent the occurrence of deep cracks while continuing to use interference-fit spargers is not acceptable. Such programs expose too many inspection and repair personnel to radiation when better methods are available. Furthermore, there is some possibility that a deep crack might escape detection until it is large enough to cause significant reduction of the margin of safety.

For plants undergoing licensing review, the following NRC staff positions apply:

(1) Modifications to the nozzle and sparger/thermal sleeve must be complete prior to receiving an operating license.

(2) Interference-fit spargers are not acceptable because their efficacy is expected to decline with time as the interference is lost through wear and plastic deformation.

(3) The welded spargers installed on Zimmer and WPPSS-2 are acceptable designs for those facilities only. Other proposed welded designs will require evaluation on a case-by-case basis. These spargers prevent dye-penetrant inspection of the nozzle bore, and the continued integrity of the weld connecting the sleeve to the nozzle bore or safe end has not been demonstrated by operating experience.

(4) Clad nozzles are not acceptable because they are more prone to cracking and more difficult to inspect.

The GE triple-sleeve sparger design has been evaluated with the conclusion that it may be used without further justification beyond that given by GE in NEDE-21821-A, as amended by Appendix C of this report. Other designs having a single seal have been approved for individual plants. Licensees and applicants are free to consider other designs if they are supported by the type of analysis described at the beginning of this section. Such analysis must be submitted in the postmodification report.

For operating plants, the NRC staff position is that improvements must be made before June 30, 1983. The improvements must include nozzle clad removal, installation of improved-design spargers and system changes. Procedural changes that are determined to be advantageous for the specific plant should be implemented promptly without waiting for the nozzle, sparger, and system changes to be completed.

4.2 Systems Modifications and Operating Procedures

As noted in Section 3.3 of Appendix C, the NRC staff concurs with the GE assessment of the need for modification of certain BWR plant systems and changes to plant-operating procedures. The modifications and changes, when implemented as necessary to supplement clad removal and the installation of an improved sparger, will help assure long-term operation without significant crack growth. Such action will permit an extension of the time between required inspections of the feedwater nozzle surfaces, thus reducing the radiation exposure of maintenance personnel. The NRC staff's inservice inspection requirements allow an extension of time between inspections for those plants which remove the nozzle cladding and install spargers that meet staff criteria stated herein.

The benefits to be achieved by changes in systems and procedures are plant specific and, to a great degree, depend on feedwater temperature during operation and on the physical location of systems' components. However, the NRC staff believes that licensees and certain applicants must have, at a minimum, a low-flow controller having the characteristics described in Section 3.4.4.3 of NEDE-21821-A, and must reroute the reactor water cleanup system to all feedwater nozzles. In the case of those BWRs under construction that will have higher feedwater temperatures than presently available in operating reactors, the need for system changes will be reviewed on a case-by-case basis. These modifications must be completed before June 30, 1983 on operating reactors and those reactors under construction which will receive operating licenses (OLs) prior to June 30, 1983. To keep radiation exposure as low as reasonably achievable, all plants that will not have received an operating license by June 30, 1983 must complete the modifications before issuance of the license. Licensees (and applicants) should also consider other system changes suggested by General Electric and implement those considered necessary. Information regarding additional changes should be submitted as part of the postmodification report (licensees) or the Final Safety Analysis Report (applicants).

As determined from recent testing at Monticello, the 600-psi turbine roll, discussed in Section 3.3.3 of Appendix C, is no longer considered a feasible alternative.

4.3 Inspections

4.3.1 Introduction

Several UT examination techniques have been used to inspect feedwater nozzle blend radii and bore regions from the exterior of the reactor vessel. The technical and experimental bases are not yet available to define for each technique the probability of finding a given size of flaw within each region of the blend radius, bore, or safe end with the accuracy and repeatability required to rely on the technique as the primary means of inspection. The UT examination involves a complex geometry, long examination metal paths, and inherent ultrasonic beam spread, scatter, and attenuation. As a result, the following inspection requirements are based on the current state of the art. The required inservice inspection program incorporates both UT of the entire nozzle and PT of varying portions of the blend radius and bore (depending on results of an initial PT of accessible blend radius areas).

The staff encourages the continued development of UT techniques for the feedwater nozzle examinations. Should future developments and the results of inservice UT examinntions demonstrate that UT techniques can detect small nozzle thermal fatigue cracks with acceptable reliability and consistency, these techniques could then form the basis for modification of the inspection criteria that follow. At such time, the staff will issue additional guidance addressing the revised requirements.

4.3.2 Feedwater Nozzle Inservice Inspection Program

4.3.2.1 Introduction

The objective of this inspection program is to ensure that even if feedwater nozzle thermal fatigue cracks are initiated, their growth will be limited to avoid violation of the applicable ASME Code or threat to the integrity of the reactor vessel. The importance of limiting crack growth lies not only in the safety considerations, but also because there is no approved method for nozzle repair by weld buildup, should extensive growth of a crack go undetected.

The staff has considered a number of alternative approaches for monitoring feedwater nozzles for cracks. This inspection program, as implemented by licensees, will assure continued reactor safety while improved nondestructive examination methods are being developed.

The plan specified below is equally applicable to operating BWRs and those undergoing operating license review. In the context of this plan, a startup/shutdown cycle is defined as a reactor thermal power increase from nominally zero, and subsequent return to zero, which produces both pressure and temperature changes and which involves the flow of any amount of cold feedwater through the feedwater nozzles. Scrams to low-pressure hot standby and conventional startup/shutdown cycles are included in the definition of a startup/shutdown cycle.

4.3.2.2 Inspection Intervals

The routine inspection intervals for representative feedwater nozzle and sparger configurations given in Table 2 reflect the NRC staff's present estimate of the effectiveness of these sparger types in preventing cracks in feedwater nozzles. The inspection intervals apply to all plants of each configuration but may be revised as experience accumulates.

4.3.2.3 UT Inspection and Subsequent PT of Recordable Indications

At scheduled refueling outages for which a UT inspection of feedwater nozzles is called for in Table 2, perform an external UT examination of all feedwater nozzle safe ends,* bores, and inside blend radii. If indications are found in

*On Duane Arnold and Brunswick Unit 1, the thermal sleeve attachment weld configuration is such that a crack emanating from the weld region could affect the integrity of the pressure boundary of the feedwater line. Therefore, the safe-end inspection must include this region.

Table 2. Routine Inspection Intervals

Configuration	Inspection Interval-Refueling Cycles (or Startup/Shutdown Cycles)		
	UT	Visual Inspection of Sparger[1]	Routine PT[2]
Interference fit, clad[3]	1	2	2 (or 30)[4]
Welded, clad[5]	2	2	4 (or 60)[6]
Single-sleeve, single-piston-ring seal, clad removed[7]	2	4	4 (or 60)
Oyster Creek & Nine Mile Point (clad removed, significantly modified spargers installed)	2	4	6 (or 90)
Welded, clad removed (spargers have top-mounted elbows)[5]	2	4	6 (or 90)[6]
Triple-sleeve spargers with two piston-ring seals, clad removed[7]	2	4	9 (or 135)
Other configurations[8]			

[1]Visual inspection of flow holes and welds in sparger arms and sparger tees.
[2]To be performed even if the UT and leak test results are satisfactory.
[3]The present inspection interval began at the last inspection during which an interference-fit sparger was removed for PT.
[4]Next refueling after 30 startup/shutdown cycles, but not later than the second refueling cycle after the previous PT.
[5]The present inspection interval began at the last PT of accessible portions of the nozzle.
[6]Accessible areas only.
[7]The present inspection interval began when cladding was removed and the triple-sleeve or single-sleeve piston-ring spargers were installed.
[8]Other configurations, such as the proposed double-sleeve welded design for Monticello, will be reviewed on a plant-specific basis and inspection intervals determined from these reviews.

the safe end, evaluate per Section XI of the ASME Code. If recordable indications (defined in ASME Section V, Article 4, Paragraph T-441.8) are interpreted to be cracks in any nozzle, proceed with the sparger removal, PT of the nozzle bore and the nozzle blend radius, and repair. An acceptable PT, whether required by the finding of a UT indication or by the routine inspection schedule given in Table 2, includes removal of a sparger from one nozzle (see exception below) followed by flapper wheel grinding and examining, by PT, both the nozzle of the removed sparger and the accessible portions of the other nozzles. If any cracks are detected, remove all spargers and completely examine all nozzles, and remove all nozzle cracks.

An exception to this inspection plan may be made for the routine inspections on those plants which have single-sleeve forged-tee spargers because of the accessibility to the nozzle surface afforded by this design. The first step may consist of inspection of accessible portions of all nozzles rather than the removal of a sparger and inspection of its nozzle and accessible areas of others. However, if any crack grindouts are found to exceed 0.06-inch deep by 0.25-inch long, all spargers must be removed, and cleaning and repair must follow.

4.3.2.4 Leak Determination Requirements and Subsequent PT of Nozzles Having Leaking Sleeves

GE analyses in NEDE-21821-A indicate that feedwater leakage past the piston ring seals of single- or triple-sleeve spargers, or through a crack or cracks in a welded-in sparger, can result in feedwater nozzle cracks if significant leakage is allowed to continue. Therefore, either relatively frequent in-vessel inspections as specified in Table 2, or a demonstrated method for detection of the onset of leakage is necessary to ensure the continued integrity of the feedwater nozzles. (An exception to this conclusion is made for the sparger/thermal-sleeve designs used at Oyster Creek and Nine Mile Point. Those designs have flow baffles that prevent mixing of hot reactor water and the colder feedwater in the nozzle annulus.)

The staff has been informed that GE and NUTECH (and possibly others) are developing on-line monitoring systems that are intended to be capable of detecting significant leakage through degraded seals or a crack (or cracks) in a thermal sleeve weld. The systems are designed for use during power operation and one such system has already been installed at several operating facilities. Preliminary information suggests that these systems are feasible and practical. Results to date demonstrate that leakage can be detected although the staff still has a few reservations as to how well the system can provide a quantitative measure of leakage. We expect, however, that as experience is gained with these systems, this problem can be overcome.

The NRC encourages the further development, installation, and use of on-line leakage measuring systems. Once their effectiveness has been demonstrated, the staff will modify its in-vessel PT examination requirements (Table 2) to give credit for them. (Conceivably, with concomitant advances in UT technology under other industry programs, the PT requirement could be eliminated entirely.)

A licensee who installs an on-line leakage detection system must keep the NRC staff informed as to its performance and his assessment of leakage

measurements (if any) to permit the staff to follow the development of these systems. Readings at least weekly and a continuous log of the results are recommended.

Leakage in excess of about 0.5 gpm can be deleterious to the nozzle; therefore, a licensee must consider remedial measures if, in his judgment, the leakage rate for any nozzle exceeds about 0.3 gpm. His proposed actions must then be reported to the staff. The staff will consider the issue on a case basis.

4.3.2.5 Preservice Inspections at BWRs Undergoing Operating License Review

Although the staff recognizes that future BWRs will incorporate significant physical improvements including the triple-sleeve sparger, unclad nozzles, and system changes, we believe that certain preservice actions will help to assure long-term safe operation without feedwater nozzle cracks. Therefore, we require the following:

(1) Performance of PT in each nozzle prior to installation of sparger.

(2) Performance of baseline UT of each nozzle after installation of the sparger. The results are to be made part of the plant's permanent records for future reference.

4.4 Implementation

This section presents the staff's positions on implementation of various modifications deemed necessary to assure the NRC goal of long-term operation without significant crack growth. It is the staff's intention to require utilities to install improved spargers but not necessarily the specific designs discussed herein and in Appendix C. Other proposed sparger designs may be installed and analyses submitted, in the postmodification report, for our review.

4.4.1 Implementation on Operating Reactors

4.4.1.1 Removal of Cladding and Replacement of Interference-Fit Spargers

For plants currently utilizing interference-fit spargers in clad nozzles, clad removal and replacement of the spargers must be completed during a refueling outage before June 30, 1983. Retention of the interference-fit spargers is unsatisfactory in the long term. Short-term retention will require frequent inspection as shown in Table 2.

4.4.1.2 Implementation of Systems and Procedural Changes

4.4.1.2.1 Operating Reactors With Welded Spargers

Licensees of operating reactors with welded spargers (Duane Arnold, Edwin I. Hatch Unit 2 and Brunswick Unit 1) must complete by June 30, 1983 the modification of the low-flow controller if required to meet Section 4.2, the rerouting of the RWCU system, and other systems changes deemed necessary by the licensee. Operating procedures must be modified as practical to obtain the most benefit from the changes. Inspection requirements shall be determined from Table 2 and Section 4.3.2.4.

4.4.1.2.2 Operating Reactors With Triple-Sleeve or Single-Sleeve Piston-Ring Spargers and No Cladding

Licensees of operating reactors with triple-sleeve or single-sleeve piston-ring spargers and no cladding (Oyster Creek, Nine Mile Point, Edwin I. Hatch Unit 1, James A. FitzPatrick, Browns Ferry Unit 1, Browns Ferry Unit 2, Monticello, Pilgrim, Cooper, Peach Bottom Unit 2, Quad Cities Unit 2, and Browns Ferry Unit 3) must complete by June 30, 1983 the modification of the low-flow controller if required to meet Section 4.2, rerouting of the RWCU system (if applicable) and other systems changes deemed necessary by the licensee. Procedures must be modified as practicable to obtain the most benefit from the changes. Inspection requirements shall be determined from Table 2 and Section 4.3.2.4.

4.4.1.2.3 All Other Operating Reactors

Licensees of all other operating reactors must complete systems and procedural changes, as discussed in Section 4.2, before June 30, 1983. Inspection has been discussed in Section 4.4.1 above.

4.4.2 Implementation on Plants Undergoing Licensing Review

All BWRs that are under review for either a construction permit or an operating license will be required to incorporate an acceptable sparger design and unclad nozzles. Interference-fit spargers will not be approved. In addition, applicable systems and procedural modifications must be completed prior to initial criticality for those plants to receive operating licenses after June 30, 1983. The need for system changes will be reviewed on a case-by-case basis. The Final Safety Analysis Report for each plant should be amended at the earliest date practicable to include all component and system modifications and operating procedures for NRC staff review and approval. As part of that approval, NRC staff may require additional instrumentation and tests during the plant startup phase to demonstrate that design goals in terms of water and metal temperatures have been met. Operating procedures should include applicable GE recommendations. For those BWRs under construction which will receive operating licenses before June 30, 1983, the systems modifications must be completed before June 30, 1983 and a report submitted in accordance with Section 4.4.3.1 below.

Preservice inspection requirements are discussed in Section 4.3.2.5 and inservice inspection will be determined from Table 2 and Section 4.3.2.4.

4.4.3 Reports

The following reports must be submitted by licensees and applicants:

4.4.3.1 Licensees

(1) Upon completion of physical and procedural modifications, licensees must submit a report describing in detail the modifications and appropriate justification. This report must include details of an on-line leakage monitoring system, if one is installed. This report is to be submitted to the director of the applicable regional office of the NRC Office of Inspection and Enforcement (IE) with copies to Director, IE, and Director, Office of Nuclear Reactor Regulation (NRR).

(2) Within 6 months of completing an outage at which an inspection was performed in accordance with Table 2, the licensee must submit a detailed report discussing the inspection(s) performed. Information required includes:

(a) Number of startup/shutdown cycles since the previous inspection, and the total number of cycles. This will include cycles accumulated during the initial startup and testing of the plant.

(b) Summary of methods used and results of previous inspections, including maximum crack depth and number of cracks found in previous PT-and-grind operations, and number of startup/shutdown cycles between such inspections.

(c) Description of any additional system changes or changes in operating procedures that will affect feedwater flow or temperature and that should be considered in predicting future cracking tendencies based on past history.

(d) A detailed discussion of the inspection results, including a complete description of cracking location, dimensions, and profile, if cracking was found. Drawings and photographs, if available, are requested.

(e) Information regarding the results of leakage monitoring. However, the staff must be informed immediately if on-line leakage monitoring during operation discloses any leakage on welded spargers or leakage on the order of 0.3 gpm through single-sleeve/single-piston-ring spargers or triple-sleeve spargers.

(f) Information regarding all UT crack-like indications and any subsequent PT indications. Information regarding UT techniques should be as precise and as extensive as possible in order that it may be of benefit in future inspections.

(g) The above information is to be submitted to the Regional Director, IE, with copies to Director, IE, and Director, NRR.

4.4.3.2 Applicants

Upon completion of sparger installation and systems changes, the applicant must submit to NRC the information described in Sections 4.3.2.5 and 4.4.2 and provide information regarding a leak detection system (if installed). The report must include detailed information regarding systems modifications and procedures which serve to prevent crack initiation or crack growth. These data will be used in determining any possible changes to the inspection intervals of Table 2.

PART II - CONTROL ROD DRIVE RETURN LINE NOZZLES

5 INTRODUCTION AND STATEMENT OF PROBLEM

Twenty-two of the 23 operating BWR reactor vessels in the United States with feedwater nozzle/sparger systems also have control rod drive return line (CRDRL) nozzles. Each vessel has one such nozzle, typically 3-4 inches in diameter, and generally located 68-100 inches above the top of the active fuel. A typical nozzle is illustrated in Figure 6.

The control rod drive (CRD) system provides water to: (1) maintain rod scram accumulators in a charged condition at greater than reactor pressure; (2) drive the rods into or out of the core; and (3) cool the rod drive mechanisms continuously. The CRDRL was designed to provide a reactor pressure reference to the CRD system and to return to the reactor vessel exhaust water from CRD movement and water in excess of system requirements.

In April of 1975, a GE task force investigating cracking in austenitic stainless steel piping reported unexpectedly high top-to-bottom thermal gradients in CRDRL nozzles, particularly at low flows (return-line water, unlike feedwater, is not heated and is typically at 100°F or less). Crack initiation susceptibility was cited and rerouting the return line was considered. Operating experience has proven this susceptibility in that cracking has been found to be widespread. The cracking was discovered not only in the CRDRL nozzle but also was found on the wall of the reactor vessel beneath the nozzle. This phenomenon was caused by the spilling of the cold CRD return water onto the reactor vessel wall.

As an illustration of the severity of the CRD return-line nozzle cracking, Table 3 gives a synopsis of the early examination history.

The GE study of the CRDRL nozzle cracking problem resulted in a series of recommendations to licensees. The staff has reviewed each GE recommendation and has determined that (1) valving out of the return line is acceptable only as an interim measure; (2) rerouting of the return line to another system which connects to the reactor vessel is preferable, and (3) only certain BWR classes may implement the final* GE recommendation, to cut and cap the line and nozzle without rerouting, and then only after specific testing has been completed. Other plants may be included in this category when analyses and testing have been completed satisfactorily.

Detailed discussion regarding the CRD nozzle problem, the proposed solutions, the staff's review of the proposals, and the staff's conclusions and recommendations for implementation are presented in the sections that follow.

*The word "final" is a staff characterization only for the purposes of its review. Indeed, new vessels do not even incorporate a CRDRL nozzle.

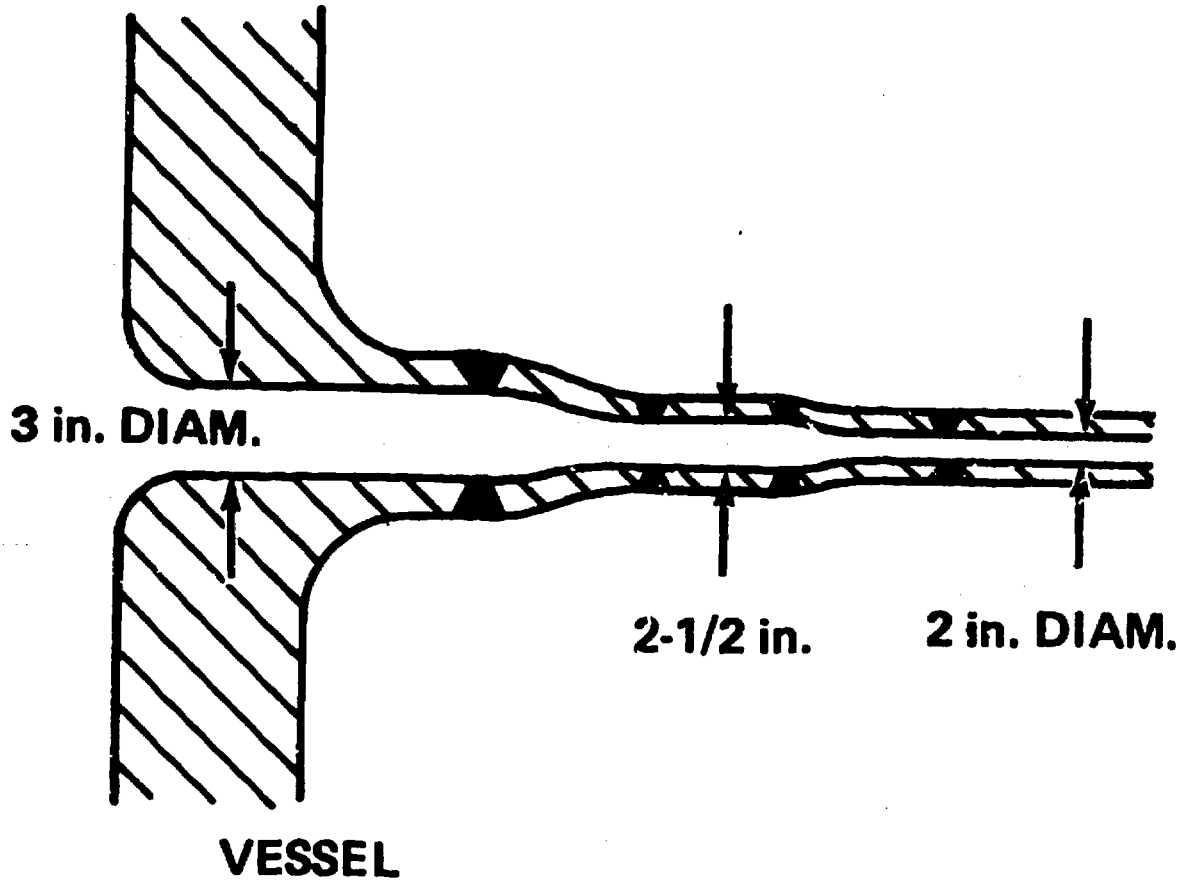

Figure 6. Typical BWR CRD hydraulic return line nozzle (does not show thermal sleeve/flow shroud).

Table 3. Control Rod Drive Return-Line Nozzle Examination Results

Plant	Years*	Start-ups	Maximum Crack Depth, In.**	Extent of Cracking	Thermal Sleeve
Peach Bottom 3	2	45	0.88	General	None
Peach Bottom 2	3	65	0.90	General; also on vessel wall below CRDRL nozzle	None
GE overseas reactor	6	49	0.88	General	None
Another overseas reactor	~4	~32	0.56	General	None
Edwin I. Hatch 1	2	85	0.62	Single bottom of nozzle	Expanded without flange
Nine Mile Point 1	-	109	-	None	Welded, projects into vessel several inches

*Years in operation at time of inspection.
**Clad and base.

6 CAUSES OF PROBLEM

The cause of crack initation of CRDRL nozzles is a thermal fatigue mechanism similar to that seen in feedwater nozzles. High-frequency thermal cycling occurs during normal operation as a result of turbulent mixing of hot water in the vessel with the low temperature (50 to 100°F) water entering through the CRDRL. Low-cycle fatigue crack propagation results from startup/shutdown thermal and pressure cycles and from flow changes during scrams. In those plants that have a thermal sleeve in the CRDRL nozzle, bypass leakage flow is minimal because the pressure drop is much smaller than in feedwater nozzles, which have a thermal sleeve and sparger. In the CRDRL nozzle, unlike the feedwater nozzle, there is a continuous large top-to-bottom thermal gradient, which aggravates the cracking.

Also unlike the feedwater nozzle, cracks have been observed on the vessel wall directly beneath the CRDRL nozzle in an area extending downward 6-8 inches from the nozzle blend radius. The cracks on the vessel wall are mainly circumferential. They are believed to result from high-cycle thermal stresses related to stratified flow of cold water along the bottom of the nozzle and down the vessel wall as it mixes with the downflow of reactor water.

Although some inferences could be drawn from differences in the extent of cracking observed in CRDRL nozzles that used different thermal sleeves, this does not seem worthwhile, because system changes are available to completely eliminate the CRDRL flow and thus the cracking problem.

7 SOLUTIONS

7.1 Nozzle Repair

Unless clad removal is planned, cracks found in inspection of the CRDRL nozzle must be removed by grinding, using the same techniques of repeated PT and grinding that are used on feedwater nozzles. The area to be examined should include the nozzle bore and blend radius and a broad area on the reactor vessel wall immediately below the nozzle blend radius extending downward approximately 8 inches below the lower edge of the blend radius.

7.2 Alternative Solutions Proposed by GE

As mentioned in Section 5, GE proposed alternative methods for stopping the flow of cold water through the CRDRL nozzle and thus eliminating crack initiation. One of the recommendations, which could be characterized as immediate action and effective in the short term, was to valve closed the return line with commensurate flow and pressure changes to the CRD hydraulic system. The valves are located outside the primary containment, and flow could be reinstated by reopening whenever necessary. An inherent problem with this method is that the portion of the return line between the valves and the nozzle is filled with stagnant water. The aforementioned 1975 GE task force identified lines containing stagnant water as a source of serious concern regarding intergranular stress corrosion cracking (IGSCC) in piping. Frequent inspections would be required for continued safe operation in this mode.

Another GE recommendation, already implemented at several facilities and considered by the staff to be an acceptable long-term solution, is to reroute the CRDRL to another fluid system which in turn is connected to the reactor vessel, and operate with the rerouted line open. This results in only minor alteration of the CRD system hydraulic characteristics and retains the maximum capability of the system to provide high-pressure water to the reactor vessel.

In the above rerouting approach, the welded connection to the fluid system which serves as the return path to the vessel is typically located outside the reactor containment. Systems such as the reactor water cleanup system and the reactor core isolation cooling system (which are connected to the feedwater system) may be used as the point for injection of return flow. One drawback to the rerouting scheme is that the introduction of the cold CRD return water may cause cracking in the vicinity of the connection if the "host" piping is much hotter. Although not directly attributed to the cold CRD flow, cracking (discovered by leakage) in the heat-affected zone of a CRD modification-related weld at Pilgrim Unit 1 has alerted the staff to the need for inservice inspection of CRD piping modification welds.

The third and last in the succession of GE recommendations was total removal of the CRDRL and capping of the nozzle. Several BWRs under construction do not have CRDRLs; neither line nor nozzle will appear in any future GE BWRs.

The recommendation to remove the return line was based on the need to prevent nozzle cracking and on GE's determination that the line had never been necessary in order to attain an acceptable CRD reference pressure to the reactor vessel. Reference pressure for proper operation of the system may be obtained by system adjustments on operating reactors.

It was initially thought that the return of excess water and drive movement exhaust water to the vessel could be accommodated by flow through the cooling water header and the drives themselves. However, subsequent testing performed at an operating reactor in response to NRC staff concerns revealed that flow in the exhaust-water header resulting from drive movements was not discharged to the cooling-water header. Instead, the water returned to the reactor vessel through a reverse-flow path involving the insert exhaust directional control valves of nonactuated CRD hydraulic control units. This discovery resulted in substantial additional review on the part of NRC staff and GE, since carbon steel piping was involved and corrosion products could have a deleterious effect on CRD system operation. Also, the staff was concerned about continued long-term operability of the insert exhaust directional control valve (V-121), because it would have to accommodate reverse flow for which it was not designed. As discussed in Appendix D, these concerns have been resolved to the satisfaction of the staff. System modifications will be required to assure long-term operation with no deleterious effects due to corrosion products. Modifications will also include pressure-equalizing valves.*

The major staff concern regarding the final recommendation was the loss of a portion of the high-pressure return-flow capacity to the reactor vessel. Based on this concern, the staff has concluded that the GE "cut and cap" recommendation is only acceptable for certain classes of BWRs, and only for these after specific modifications have been made and operability testing completed. Operability testing should include flow-capacity testing in the form of a demonstration of simultaneous two-pump operability during which flow measurements are recorded. More discussion is presented in Section 7.3.

Before implementing the final recommendation, other plants will require further analysis of return-flow capability in addition to the modification and testing. Only two plants, Oyster Creek and Nine Mile Point, will be allowed to operate with CRDRL and nozzle flow intact.

7.3 Return Flow to Vessel

A major portion of the review of the GE-proposed "cut and cap" alternatives concerned how that modification would affect ability of the CRD system to provide an emergency source of high-pressure water to the core. The other alternative "solutions" would not significantly affect this CRD system capability as a high-pressure water source, since an alternative, approximately equivalent, flow path to the core would be provided for the "reroute" case and opening the valve in the "valve-out" case would restore flow through the line.

*The pressure-equalizing valves perform the necessary functions of: (1) preventing continuous flow to the normal exhaust-water header and coincident reverse flow through the V-121 valves mentioned above; (2) preventing flow from the carbon steel piping of the normal exhaust-water header to the drive cooling-water flow; and (3) assuring that high differential pressures between the drives and normal exhaust-water header do not develop. Under certain unlikely hypothetical circumstances, such differential pressures could result in rod movement at an initial velocity much higher than that for which the rods were designed.

The NRC staff recognizes that the presence of the CRD system's high-pressure flow capability has not been directly assumed in previous safety analyses. However, the critical need for this capability became apparent to the NRC as a result of the 1975 Browns Ferry Unit 1 fire, during which the CRD system was sometimes the only source of high-pressure water to keep the reactor core covered. The critical need for the water source again was revealed by the May 2, 1979, incident at Oyster Creek Nuclear Generating Station during which the reactor core was largely isolated from other sources of cooling water, and the CRD system makeup capability helped prevent uncovering of the active fuel.

The "cut and cap" alternative could significantly affect the ability of the CRD system to provide a source of high-pressure water to the core during certain emergencies. Therefore, the NRC staff requested, and GE provided, a comparison of such CRD system high-pressure injection capability for various BWR designs before and after the proposed modification.

The calculations utilized a base case set of conditions that existed during the 1975 Browns Ferry fire, which placed the most severe demands on the CRD system experienced to date. During that incident, a normal water level was maintained above the core (by other systems) until 40 minutes after shutdown. At this time reactor pressure increased to the set pressure of the lowest setpoint safety/relief valve setting, and concurrently all sources of water other than the CRD system were lost. Under those conditions, flow necessary to keep the core from uncovering was calculated and compared to the separately calculated ability of the plant CRD system to provide water to the core, both before and after the modification, with either one or two CRD pumps in operation.

We reviewed the calculations of flow required to prevent uncovering of the core for the base-case conditions. The calculations included maximum water boiloff rate and leakage, thus ensuring inclusion of all heat sources (fission product decay, actinides, stored heat, wall heat, etc.) and all leakage from the primary system (technical specification limit for identified and unidentified leakage, etc.). Therefore, calculated water required to keep the core covered was maximized.

We reviewed the calculations of flow that would be available from the present system (with the return line intact) to ensure that all practical actions that could be accomplished outside containment had been assumed to have occurred (i.e., opening certain control valves). This would tend to maximize the apparent change, if any, due to elimination of the return line when flow from the present system (as calculated above) is compared to flow available from the modified system.

We reviewed the calculations of flow that would be available from the modified system with the return line removed to assure that assumptions were made that would tend to minimize the available flow. Valve positions outside containment were still assumed optimized for maximum flow (just as above), but we required that new, minimum-leakage seals be assumed in the drives since, for the modified system, drive operation exhaust flow returning to the vessel must "leak" past these seals. Again, this is in the direction of tending to maximize the apparent flow change due to the modification, and to make it more difficult to demonstrate flow capability equal to or greater than the flow required to satisfy the base-case conditions.

All "flow available" calculations were required to be performed assuming both one- and two-CRD-pump operation. Even though two-pump operation was not a design requirement, the NRC staff felt that such operation would be possible on many or all plants if procedures were developed and the operators were familiarized with those procedures and with potential benefits of such operation during emergency conditions.

Conclusions of the NRC staff review are presented in Section 8.1. Additional information can be found in Appendix D.

7.4 CRD System Operability

During the course of the staff's review of the GE-proposed solutions, many questions were raised concerning the long-term operability of the CRD system after modifications had been completed. The problems and solutions, already presented and discussed in Section 7.2 and Appendix D, were:

(1) Variations in differential pressures across the drives, possibly resulting in improper operation, failure to operate and high differential pressure under certain conditions.

(2) Possible deleterious effects due to reverse flow through insert exhaust directional control valves.

(3) Possible deleterious effects due to corrosion products emanating from remaining carbon steel piping in the CRD system.

(4) Possible other effects on system parameters, such as alteration of scram times and settle margin.

The staff has determined that appropriate testing of the system after adjustments, modifications, and inservice maintenance as proposed by licensees and approved after review by the staff, will provide adequate assurance of long-term system operability.

8 STAFF POSITIONS AND IMPLEMENTATION

8.1 Acceptability of Alternatives Proposed by GE

The various solutions to the CRDRL nozzle cracking problem have been presented in Section 7.2 and Appendix D. The staff has reviewed each of the proposals in detail and has reached the following conclusions:

(1) All licensees must inspect, by dye-penetrant testing, the CRDRL nozzle blend radius and bore regions and the reactor vessel wall area beneath the nozzle. All cracks must be removed.

(2) Operation of the CRD system with the CRDRL valved out is acceptable only as an interim measure, and only after commensurate system flow and pressure changes have been attained satisfactorily according to GE-recommended methods. However, frequent inspection of the pipe containing stagnant water also will be necessary.

(3) Rerouting of the CRDRL to a system which connects to the reactor vessel is preferred. The connection should be outside containment and flow through the system is the option of the licensee. If flow is not maintained, the modifications of (4)(a')-(c') below will be required. If flow is maintained or is expected to be utilized during future normal operation, a pressure-control station [see (5) below] in the cooling-water header will be required. In any case, inspection of the welded connection (return line to receiving system) will be required.

(4) Only licensees of the following classes of BWRs will be permitted to immediately implement the GE recommendation to cut and cap the CRDRL nozzle without rerouting the CRDRL (the option remains open to other licensees who can prove satisfactory system operation, return flow capability, and two-pump operation if necessary):

(a) 218-inch BWR/6 (see Appendix D)
(b) 251-inch BWR/6 (see Appendix D)
(c) 183-inch BWR/4 (see Appendix D)
(d) 251-inch BWR/4 (see Appendix D)
(e) 238-inch BWR/6 (based on GE letter MFN-285-79 dated November 27, 1979)
(f) 218-inch BWR/4 (also based on GE letter MFN-285-79)
(g) 251-inch BWR/5 (based on GE letter MFN-089-80 dated May 2, 1980 - two-pump operation required)

Each of the applicable licensees will be required to demonstrate, by testing, concurrent two-CRD-pump operation (if necessary to fulfill required flow capacity), satisfactory CRD system operation, and required return-flow capacity to the vessel. Finally, each of these licensees, and those electing to reroute the CRDRL with subsequent valve-out, will be required to install the following modifications:

(a') Equalizing valves between the cooling water header and the normal drive movement exhaust water header.

(b') Flush ports at high and low points of the normal drive movement exhaust water header piping run if carbon steel piping is retained.

(c') Replacement of carbon steel pipe in flow stabilizer loop with stainless steel and rerouting directly to the cooling-water header.

(5) Licensees who choose to reroute the CRDRL with continuous return-line flow to the system being tapped into must add the GE-recommended pressure control station to the cooling-water header. This station acts to automatically control cooling-water flow during pressure changes between the feedwater system and the CRD system (such as an increase to rated thermal power from hot standby). The addition of the pressure-control station is also required if continuous flow is to be utilized during normal operation in the future.

(6) All applicants undergoing licensing review for BWRs designed and constructed without the CRDRL and its nozzle must test to prove satisfactory system operation, return-flow capability equal to or in excess of the base-case requirement discussed in Section 7.3, and two-pump operation. The applicable modifications of (4)(a') through (c') above also must be implemented. Calculations with regard to base-case return flow requirements should be submitted, but in lieu of such calculations the staff may accept reference to a bounding analysis, if necessary justification is provided.

(7) All licensees and applicants, regardless of the particular type of modification selected, must establish operating procedures for achieving CRD flow to the reactor vessel equal to or greater than the boiloff rate of the base case discussed in Section 7.3.

8.2 Required Modification, Testing, and Maintenance of CRD System

Postmodification testing and recurrent maintenance actions will be necessary as part of the implementation of the various CRD-system modifications and subsequent operation of the system.

Regardless of the particular type of modification chosen, each licensee and applicant must demonstrate by test the ability to provide CRD-system return flow equal to or in excess of the requirements of the base case of Section 7.3. If two CRD pumps are required for this flow, their concurrent operation must be demonstrated by testing. Also, each plant must successfully undergo a CRD-system performance test after completion of the modification and before the reactor is placed in an operational status. The system-performance test must be accomplished in accordance with test instructions similar to those prepared by the General Electric Company, as modified to reflect plant-unique characteristics. An example of an acceptable test instruction is the GE document OPE 3-377, entitled "GE BWRSD (Boiling Water Reactor Systems Department) Test Instruction for Evaluation of Isolated Operation of Fukushima-1/Peach Bottom-3 CRD Hydraulic Return Line," March 1977. This document includes requirements for special equipment, precautions, data regarding desired transient response, and data regarding recording system performance.

Plant-specific requirements are as follows:

(1) Licensees who have isolated the CRDRL by the use of valves: In addition to the postmodification CRD-system-performance test after the valves are closed and the return-flow-capacity demonstration, the nozzle must be

dye-penetrant inspected when the modification to cut and cap, with or without reroute, is accomplished. Also, during each refueling outage, the portion of the CRDRL containing stagnant water must be inspected in accordance with the recommendations of NUREG-0313, Rev. 1, "Technical Report on Material Selection and Processing Guidelines for BWR Coolant Pressure Boundary Piping" (Ref. 2).

(2) Licensees who have cut and capped the CRDRL nozzle with rerouting of the CRDRL (rerouted line flow valved open): We will require that the licensee complete the final PT of the nozzle, the installation of the pressure-control station of Section 8.1(5), the return-flow-capacity demonstration and the postmodification CRD-system-performance test. We will require that during each refueling outage the licensee inspect the welded connection joining the rerouted CRD return line to the system which then returns flow to the reactor vessel. The inspection, using UT, must include base metal to a distance of one-pipe-wall thickness or 0.5 in., whichever is greater, on both sides of the weld. The pipe into which the CRD return flow is connected also must be inspected by UT to a distance of at least one pipe diameter downstream of the welded connection.

(3) Licensees who have cut and capped the CRDRL nozzle with rerouting of the CRDRL (rerouted line flow valved closed): In addition to the final PT of the nozzle, the return-flow-capacity demonstration and the postmodification CRD-system-performance test, the following requirements must be met:

(a) During each refueling outage, the welded connection joining the rerouted CRDRL to the system which then returns flow to the reactor vessel is to be inspected. The inspection, using UT, must include base metal to a distance of one-pipe-wall thickness or 0.5 in. whichever is greater, on both sides of the weld. The pipe into which the CRD return flow is connected also must be inspected by UT to a distance of at least one pipe diameter downstream of the welded connection.

(b) During each refueling outage, that portion of the CRDRL containing stagnant water must be inspected in accordance with the recommendations of NUREG-0313, Rev. 1. This does not apply if the piping containing stagnant water is fabricated from carbon steel.

(c) The CRD system modifications of Sections 8.1(4)(a') through (4)(c') must be accomplished and plant maintenance procedures must be changed to include such maintenance actions as flushing the exhaust-water header and cleaning the filters in the insert and exhaust lines if carbon steel piping is retained. These filters are to be retained in the hydraulic control unit (HCU) to prevent corrosion products from being carried into the CRD mechanisms.

(4) Licensees and applicants who choose to cut and cap the CRDRL nozzle without rerouting of the CRDRL: In addition to the final PT of the nozzle, the return flow capacity demonstration and the postmodification CRD-system-performance test, the following requirement must be met:

The CRD system modifications of Section 8.1(4)(a') through (4)(c') must be accomplished and plant maintenance procedures must be changed to include flushing the normal drive-movement exhaust-water header and cleaning the

filters in the insert and exhaust lines if carbon steel piping is retained. These filters are to be retained in the HCU to prevent corrosion products from being carried into the CRD mechanisms.

(5) Nine Mile Point and Oyster Creek: The previous PTs in 1977 at both plants revealed no nozzle cracking. Niagara Mohawk Power Company chose to restore the Nine Mile Point original design thermal sleeve, which had been welded to the nozzle safe end (the original sleeve had been removed to allow PT). We will require that the nozzle be dye-penetrant inspected at the time of feedwater-nozzle inspection in accordance with Table 2. This inspection requirement will include PT of the reactor vessel wall area beneath the nozzle.

Jersey Central Power & Light Company chose to retain the upstream end of the Oyster Creek thermal sleeve, which was rolled into the nozzle safe end and tack-welded in three positions. The downstream end of the thermal sleeve was cut off to permit PT of the nozzle blend radius. It was replaced by a removable insert deemed to be as good as the original sleeve. We will require that the insert be removed and PT be performed at the time of feedwater nozzle PT in accordance with Table 2. This inspection requirement will include PT of the reactor vessel wall area beneath the nozzle.

Licensees of plants which have already completed one of the options above but have not accomplished necessary concomitant system modifications or testing, or have not established the necessary maintenance and inspection programs, shall be required to do so prior to the date set forth in Section 8.3. This also applies to applicants whose plants are expected to receive licenses prior to the date set forth in Section 8.3.

8.3 Staff Conclusions and Position on Implementation

The staff conclusions regarding the acceptability of the various available modifications and the requirements for implementation, inservice inspection and maintenance of the "reroute" and "cut and cap" options, are presented in Sections 8.1 and 8.2. Because of our desire to limit radiation exposure to maintenance personnel, we have determined that licensees of those plants that have exercised the "valve-out" (interim) option must implement one of the other options no later than June 30, 1982. Also, licensees of those plants which have already completed either the "reroute" or the "cut and cap" but have not accomplished the necessary concomitant system modifications or testing as discussed in Section 8.2, must fulfill all requirements no later than June 30, 1982. This applies also to applicants whose plants are expected to receive operating licenses prior to June 30, 1982.

Each licensee must submit a report of modification or completion of requirements within 6 months after the outage which allowed completion of necessary actions by June 30, 1982. This submittal must include any analyses required to justify the "cut and cap" option, results of pump and postmodification CRD system testing, results of the final CRDRL nozzle and vessel-wall inspection, and the proposed inservice inspection and maintenance program. This report must be submitted to the Regional Director of the Office of Inspection and Enforcement (IE) with copies to the Director, IE, and Director, Office of Nuclear Reactor Regulation. Applicants of plants to be licensed after June 30, 1982 will be required to submit such information during the course of the normal licensing review.

REFERENCES

1. U.S. Nuclear Regulatory Commission, "Interim Technical Report on Feedwater and Control Rod Drive Return Line Nozzle Cracking," USNRC Report NUREG-0312, July 1977.*

2. U.S. Nuclear Regulatory Commission, "Technical Report on Material Selection and Processing Guidelines for BWR Coolant Pressure Boundary Piping," USNRC Report NUREG-0313, Rev. 1, July 1980.*

*Available for purchase from NRC/GPO Sales Program, U.S. Nuclear Regulatory Commission, Washington, D.C. 20555, and/or the National Technical Information Service, Springfield, Virginia 22161.

APPENDIX A

NRC A-10 TASK GROUP

R. P. Snaider, Generic Issues Branch, Division of Safety Technology (Task Manager)

R. E. Johnson, Generic Issues Branch, Division of Safety Technology

P. N. Randall, Structures and Components Standards Branch, Office of Standards Development

M. Subudhi, Brookhaven National Laboratory

M. R. Hum, Materials Engineering Branch, Division of Engineering

S. D. MacKay, Procedures and Test Review Branch, Division of Human Factors Engineering

J. J. Zudans, Equipment Qualification Branch, Division of Engineering

R. K. Mattu, Generic Issues Branch, Division of Safety Technology

R. W. Klecker, Materials Engineering Branch, Division of Engineering

W. S. Hazelton, Materials Engineering Branch, Division of Engineering

F. Clemenson, Auxiliary Systems Branch, Division of Systems Integration

R. H. W. Woods, Office of Inspection and Enforcement

W. R. Mills, Office of Inspection and Enforcement

APPENDIX B

Task Action Plan A-10

BWR NOZZLE CRACKING

Lead NRR Organization:	Division of Operating Reactors (DOR)
Lead Supervisor:	Darrell G. Eisenhut, Acting Director (DOR)
Task Manager:	Dick Snaider, DOR
Applicability:	Boiling Water Reactors
Projected Completion Date:	October 31, 1979

1. DESCRIPTION OF PROBLEM

A. BWR Feedwater Nozzle Cracking

Of the 23 operating BWRs with feedwater nozzle/sparger systems (normally 4 nozzles/spargers per BWR, nominal nozzle diameter being 10"-12"), 21 have been inspected to date (1/25/79) resulting in the discovery of blend radius or bore cracking in all but three vessels. Although most cracks have been in the range of 1/2" to 3/4" total depth (including cladding), one crack penetrated the cladding into the base metal for a total depth of approximately 1.50 inches. The initiation of cracking is due to high cycle fatigue caused by fluctuations in water temperature within the vessel in the sparger-nozzle region during periods of low feedwater temperature when the flow may be unsteady and intermittent. Once initiated, the cracks are driven deeper by the larger pressure and thermal cycles associated with startup and shutdown.

Fracture analyses indicate that the cracks found to date in the feedwater nozzles constitute a potential safety problem because the observed rate of crack growth with time in service is such that the margin of safety against fracture will be reduced below acceptable values unless the cracks are detected and ground out every few years. Obviously, repair by grindout can be repeated only a few times before ASME Code limits for nozzle reinforcement are exceeded. However, repair by welding buildup of the grindout has not been demonstrated to be acceptable. In addition, the inspection and removal of cracks by grinding has caused enough radiation exposure to personnel to be deemed unacceptable as a long-term solution.

B. Control Rod Drive Hydraulic Return Line Nozzle Cracking (CRDRL Nozzle)

Each of the 22 applicable BWRs has one CRDRL nozzle of 3"-4" diameter, which is normally located approximately four feet below the level of the feedwater nozzles (in the Oyster Creek and Nine Mile Point vessels, the CRDRL nozzle is located at the same level as the feedwater nozzles). Thermal fatigue cracks have been found by dye penetrant (PT) inspection of the CRDRL nozzle and the area immediately beneath the nozzle at 12 units inspected to date (1/25/79). These cracks resemble those found in the BWR feedwater nozzles, and the cause of cracking appears to be thermal fatigue. All but 2 of the operating domestic BWRs have some sort of thermal sleeve (there are several designs) in the CRDRL nozzle, but because of the limited number of inspections of nozzles with sleeves, the efficacy of the sleeves is not known.

To date, the principal activity of licensees has been to reroute or temporarily valve out the CRDRL. Although both accomplish the intended purpose of shutting off cold water flow to the nozzle, General Electric Company (GE) has further recommended that the CRD system be operated in an isolated mode. GE recommends against retention of the present CRDRL, even valved out, because of the potential for stress corrosion in the stagnant line. GE also recommends against operation with a rerouted CRDRL open to the reactor vessel. The recommendation to isolate the rerouted line was made on the basis that return to the

vessel is unnecessary for proper CRD system operation and that CRD makeup capability to the vessel will be maintained even when the return line is eliminated entirely.

The staff still considers the matter of CRDRL isolation to be an unresolved issue because of questions regarding the amount of CRD pump flow which will be available to the vessel, the possible effects of isolation upon various drive parameters, and recently- reported potential long-term deleterious effects on certain components of the CRD hydraulic system. GE has begun an evaluation of component performance of affected portions of the CRD hydraulic system and has commenced investigation of possible system modifications. The staff must assess these proposals prior to completion of its review of this subject. In the interim, the staff will review control rod test information from each facility which has modified its present CRD system by valving out or rerouting. Additionally, to increase assurance of safety for continued operation, the staff is recommending inspection of the CRDRL nozzle blend radius and bore at each BWR during its next scheduled refueling outage. As in the case of feedwater nozzles, we are especially concerned, particularly in the case of older units, that a potential safety problem could arise from deep cracks which would necessitate weld repair.

2. PLAN FOR PROBLEM RESOLUTION

Briefly stated, the plan for generic resolution of the BWR feedwater nozzle and CRDRL nozzle cracking problems will involve the following:

A. Issue interim guidance to operating units. Such guidance includes criteria for inspection based upon present knowledge of crack growth and available techniques and has been issued as NUREG-0312 in July 1977.

B. DOR and DSS Follow Advancements in the Following Areas

(1) Development and testing of effective feedwater nozzle thermal sleeves and spargers to protect the nozzle bore and blend radius from thermal cycling and thus minimize or remove the source of crack initiation. GE has completed such development and testing and has written a final detailed topical report after having met with the staff to discuss the results of testing. The supplement to this report, addressing additional NRC concerns, is being written now.

(2) DSS will follow the Brookhaven National Laboratory (BNL) Structural Analysis Group review of the testing involved in the topical report referenced above. This BNL review has been completed and comments have been presented to GE for resolution and inclusion in the report supplement also mentioned above. However, preliminary review of the GE topical report and discussions with cognizant GE personnel have not produced any information which would make the staff believe the new GE design is not a viable solution, especially since cladding removal is an integral part of nozzle preparation for installing the new sparger/thermal sleeve. Therefore, the staff has allowed the installation of

the new GE design on two operating reactors and has approved the use of a similar modification on three additional plants, and has determined that operation of these plants is satisfactory during the period of the BNL review. This also applies to additional facilities for which the staff may approve modification prior to completion of the BNL task.

(3) DOR and DSS will follow the life-cycle testing of certain CRD system valves. GE has performed such testing to determine if long-time reverse flow will lead to valve degradation. A report is being prepared. GE also is pursuing various CRD system modifications on "requisition" (new) facilities. These modifications, which will eliminate valve reverse flow, require no CRD return line to the vessel. DOR and DSS will review the proposed modifications, which GE may also offer as "suggested" modifications to the owners of operating plants.

(4) Development of viable ultrasonic test (UT) techniques by the nuclear industry to allow reliable and consistent early determination of cracking (and credible claims for the absence of cracking) from positions exterior to the reactor vessel. Such development of UT is important to both DOR and DSS final positions especially since two operating plants and several plants in OL review have a welded thermal sleeve-to-nozzle safe-end design. The development of UT procedures for these plants is important because certain regions of the nozzle inner radius and bore are inaccessible to surface examination. The staff now recognizes that completion of this UT development may be extended beyond the length of this generic program. However, this will not hinder resolution of the major issue (crack initiation and growth) and will result in at least a temporarily more conservative stance on inservice inspections by UT until the issue is resolved satisfactorily.

(5) Development of various feedwater system and CRD system modifications as part of the generic effort toward problem resolution.

(6) Issuance of Branch Technical Position paper (CP and OL plants) and final NUREG document (operating plants) upon satisfactory completion of subtasks (1) through (4) above.

3. BASIS FOR CONTINUED PLANT OPERATION AND LICENSING PENDING COMPLETION OF TASK

As indicated in Section 2.0 the staff anticipates that this task will result in long term solutions that will provide: (1) assurance that a conservative margin of safety against vessel failure due to nozzle cracks is maintained at operating facilities, (2) more stringent licensing requirements concerning selection of materials and design for nozzles, thermal sleeves, and spargers; (3) more stringent inservice inspection and repair criteria; (4) modification of physical systems and/or operating procedures to minimize the occurrence of crack initiation and propagation; and (5) reliable inservice

inspection techniques for detection of nozzle flaws from positions exterior to the reactor vessel.

With respect to feedwater nozzle cracking, specific long term corrective measures will include system and operational changes to reduce the feedwater to reactor water temperature differential during low power operation, an improved thermal sleeve-sparger design to reduce bypass flow which exposes the nozzle surface to fluctuating water temperatures, and removal of clad from the nozzle surface, which is believed to provide a surface more resistant to fatigue cracking. Implementing some combination of these measures after plants are already under construction or are operating is feasible, e.g., several utilities with operating reactors have already implemented clad removal and the first new thermal sleeve-sparger design has been installed in an operating plant.

With respect to control rod drive return line nozzle cracking, specific long term corrective measures will include system modifications that assure proper control rod drive system performance with the return line isolated (if one is installed by design) or eliminated by design. Control rod drive return line isolation has been implemented at several operating facilities as an interim corrective measure. Studies are currently underway to determine the acceptability of long term operation in this manner. If these studies (which are scheduled for completion in early 1979) demonstrate no degradation of affected components, no further action in this regard will be necesary for plants so modified.

During the time period required to develop the long term solutions under this task, interim measures have been taken. Specifically, the staff is requiring inservice inspection using liquid penetrant examinations at operating reactors in accordance with the procedures and acceptable criteria set forth in detail in NUREG-0312, Interim Technical Report on BWR Feedwater and Control Rod Drive Return Line Nozzle Cracking, July 1977. Licensees are also utilizing ultrasonic inspection techniques in an effort to develop effective techniques that will allow early detection of subsurface flaws. Enhancement of ultrasonic testing techniques will substantially reduce personnel exposures. The scheduling and extent of inspection is based upon conservative estimates of crack growth from fracture mechanics analyses assuming undetected flaws. Scheduling is thus dependent upon the reactor's record of past repair (grindouts, clad removal, etc.), operating history (number of startup/shutdown cycles since last dye-penetrant inspection), and licensee actions to minimize crack initiation by procedural or mechanical change.

Preservice inspections and an inservice inspection program are also required of applicants prior to the issuance of an operating license.

The staff has been actively involved in reviewing and approving the results of nozzle inspections and remedial actions proposed by licensees to assure continued safe operation. To date the extent of nozzle cracking at operating plants has been limited to depths which can be removed by grinding without exceeding ASME code limits for nozzle reinforcement.

In addition the staff has suggested that measures be taken at affected operating plants and by applicants for plants in the operating license

review stage prior to operation, to minimize the occurrence of conditions conducive to crack initiation and growth. These measures include monitoring feedwater temperatures and flow, minimizing rapid changes in feedwater flow and temperature, minimizing the duration of cold feedwater injection, avoiding inadvertent or unnecessary HPCI injection, avoiding the unnecessary introduction of cold water from the reactor water cleanup system, and eliminating flow through the control rod drive return line (after assuring proper system operation in an isolated mode). Although cracking of the pressure vessel nozzles is important to safety, NRC staff analyses indicate that cracking that has penetrated the vessel cladding will grow at a slow enough rate such that the cracking does not pose a critical safety concern today that warrants immediate action. Rather, the staff believes that sufficient time is available, due to the conservative design of the reactor pressure vessel, to permit continued operation of the affected facilities while studies on these events continued on schedule.

Based on the interim measures being taken at operating facilities and being required of applicants for an operating license prior to the issuance of the operating license and the design margins available in the reactor pressure vessel, we have concluded that operation of such facilities does not present an undue risk to the health and safety of the public.

For construction permit applications there is reasonable assurance that a variety of long term solutions will be available from this task and from the generic efforts being conducted by the General Electric Company, long before these plants are ready to begin operation. Even if this were not the case additional time would be available since operation could be permitted for a number of years based on inservice inspection and repair procedures using criteria similar to those currently being required.

4. NRR TECHNICAL ORGANIZATIONS INVOLVED

A. Engineering Branch, Division of Operating Reactors. Has overall lead responsibility for review of all generic inspection, repair, in-service inspection technique development, weld-repair/annealing study, and modification (such as clad removal and new design thermal sleeves/spargers) efforts. Will gather and disseminate critical information (fluid flows and temperatures) on operating plants. Will manage UT and fracture mechanics consultants as listed in Section 5 below. Issue final NUREG documents.

Manpower Estimates: 0.8 man-year FY 1979.

B. Plant Systems Branch, Division of Operating Reactors. Has lead responsibility for review and approval of any proposed generic feedwater or CRD system modifications. Will assist in development of NUREG documents. Will assist Reactor Systems Branch, DSS, in the development of CRDRL retention/removal criteria.

Manpower Estimates: 0.2 man-year FY 1979.

C. Mechanical Engineering Branch, Division of Systems Safety. Will work with DOR on development of criteria and will issue BTP for CP/OLs similar to NUREG guidance issued for operating facilities.

Will manage consultant on review of test and analytical information leading to GE topical report. Will review information related to CRD system modifications.

Manpower Estimates: 0.3 man-year FY 1979.

D. Materials Engineering Branch, Division of Systems Safety. Will assist DSS-MEB as necessary, in the development of criteria. Coordinate with DOR on resolution of UT issue.

Manpower Estimates: 0.2 man-year FY 1979.

E. Task Manager, Division of Operating Reactors. Has overall responsibility for coordination of DOR and DSS technical tasks and for the development and issuance of criteria documents.

Manpower Estimates: 0.3 man-year FY 1979.

F. Reactor Safety Branch, Division of Operating Reactors. Will assist Task Manager and Plant Systems Branch in review of CRDRL removal issues, especially with regard to vessel makeup flow capability.

Manpower Estimates: 0.1 man-year FY 1979.

G. Reactor Systems Branch, Division of Systems Safety. Will develop criteria concerning the removal of the CRDRL of applicable CP/OL facilities.

Manpower Estimates: 0.1 man-year FY 1979.

5. TECHNICAL ASSISTANCE

Contractor	Amount FY 1978	Amount FY 1979	Program Objectives
A. Washington University - Paul Paris (Managed by DOR)	$5K	$20K	Perform fracture analyses of feedwater nozzle cracks detected in operating reactors. This is necessary for generic crack growth calculations.
D. Brookhaven National Laboratory (Managed by DSS)	$25K	$20K	Perform indepth review of GE test and analytical information to assure thermal sleeve/sparger design is viable as a long term solution.

6. INTERACTIONS WITH OUTSIDE ORGANIZATIONS

A. General Electric Company

The NRC staff has followed all GE generic testing and developmental work, especially those tests designed to determine the cause of cracking and those developments related to UT enhancement. This coordination will continue.

B. Electric Power Research Institute

The NRC staff will follow closely EPRI UT optimization development work for the complex nozzle geometry. This work has other generic implications (see Task No. A-14).

C. Individual Licensees and Applicants of BWR Facilities

Each licensee has already been involved in discussions and written correspondence with the NRC concerning inspections to be performed. This interaction, as well as discussions on a generic basis, will continue until problem resolution, although the NRC position has been spelled out clearly in the interim position paper. Applicants for BWR OLs will also be involved in similar interaction with DSS.

7. ASSISTANCE REQUIREMENTS FROM OTHER NRR OFFICES

Office of Nuclear Regulatory Research (RES). RES is responsible for the Heavy Section Steel Technology (HSST) program. Information obtained from this program will be useful in the development of generic fracture analysis methods for a flaw at a geometric discontinuity.

8. POTENTIAL PROBLEMS

The most serious potential problem facing the NRC staff and licensees at this point is the discovery of a crack large enough to exceed the ASME code criteria for required reinforcement area. This would result in the need for a vessel repair (other than grinding) which would be an undertaking of potentially large proportions and of safety significance.

APPENDIX C

NRC EVALUATION OF GE TOPICAL REPORT NEDE-21821-02

UNITED STATES
NUCLEAR REGULATORY COMMISSION
WASHINGTON, D. C. 20555

January 14, 1980

Generic Task A-10

Mr. Richard Gridley, Manager
Fuel & Services Licensing
General Electric Company
175 Curtner Avenue
San Jose, California 95215

Dear Mr. Gridley:

The NRC staff has completed its review of the General Electric Company proprietary topical report NEDE-21821-02 (BWR Feedwater Nozzle/Sparger Final Report, Supplement 2, August 1979). The report incorporates in full and replaces the earlier documents NEDE-21821 (March 1978) and NEDE-218281-01 (January 1979) and includes changes to those documents forwarded by your letters dated March 1, 1979 and March 20, 1979. You also incorporated into NEDE-21821-02 those changes in response to our recent comments regarding portions of NEDE-21821-01.

The staff's evaluation of these reports is enclosed. The evaluation also implicitly includes the review of related non-proprietary documents NEDE-21821, NEDO-21821-01, and NEDO-21821-02A. NEDO-21821-02A, which is the non-proprietary version of NEDE-21821-02, is to be issued after receipt of this letter and must incorporate this letter and the enclosed Safety Evaluation Report. In the enclosed evaluation, any reference to an NEDE- document will apply to the corresponding non-proprietary NEDO- document carrying the same number.

The earlier version of the sparger and nozzle report, NEDE-21840 (BWR Feedwater/Sparger Interim Report, February 1977) with supplements, is considered to have been superseded by the final report. Thus it will receive no formal evaluation and documentation.

As a result of our review, we have determined that the NEDE-21821-02 report, with the exception of Chapters 6 and 7 as discussed in the enclosed Safety Evaluation Report (SER), is acceptable for referencing in connection with licensing actions involving the removal of cladding and the installation of the General Electric final design sparger and thermal sleeve. Inservice inspection and other additional plant-specific information noted in our SER should be addressed in applicant/licensee submittals.

The staff does not intend to repeat its review of the document when it appears as a reference in a particular licensing action.

Should regulatory criteria, regulations, codes or standards change such that any of our conclusions concerning NEDE-21821-02 are invalidated, you will be notified and given the opportunity to review and resubmit the report (or submit supplements or addenda) for review should you desire.

In accordance with established procedure, General Electric is requested to issue a revised version of NEDE-21821-02 to include the NRC acceptance letter together with SER. Both the proprietary and non-proprietary versions of this document must be referenced in future licensing actions.

If you have any questions concerning our evaluation of NEDE-21821-02, please contact this office.

Sincerely,

Darrell G. Eisenhut, Acting Director
Division of Operating Reactors
Office of Nuclear Reactor Regulation

Enclosure:
Safety Evaluation Report

SAFETY EVALUATION FOR THE

GENERAL ELECTRIC TOPICAL REPORT

"BWR FEEDWATER NOZZLE/SPARGER FINAL REPORT, SUPPLEMENT 2"

(NEDE-21821-02)

PREPARED BY

OFFICE OF NUCLEAR REACTOR REGULATION

U. S. NUCLEAR REGULATORY COMMISSION

REVIEWERS:

R. P. Snaider, Systematic Evaluation Program Branch, Division of Operating Reactors (Task Manager)

R. E. Johnson, Engineering Branch, Division of Operating Reactors

W. S. Hazelton, Engineering Branch, Division of Operating Reactors

R. W. Klecker, Engineering Branch, Division of Operating Reactors

J. J. Zudans, Engineering Branch, Division of Operating Reactors

R. K. Mattu, Mechanical Engineering Branch, Division of Systems Safety

M. R. Hum, Materials Engineering Branch, Division of Systems Safety

S. D. MacKay, Plant Systems Branch, Division of Operating Reactors

P. N. Randall, Structures and Components Standards Branch, Office of Standards Development

M. Subudhi, Brookhaven National Laboratory

BWR FEEDWATER NOZZLE/SPARGER FINAL REPORT

SAFETY EVALUATION

TABLE OF CONTENTS

1.0 INTRODUCTION

2.0 BACKGROUND

3.0 DESCRIPTION OF SOLUTIONS

- 3.1 GENERAL ELECTRIC TRIPLE SLEEVE SPARGER DESIGN
- 3.2 CLAD REMOVAL
- 3.3 MODIFICATIONS TO FLUID SYSTEMS AND OPERATING PROCEDURES

4.0 VERIFICATION OF SOLUTIONS

- 4.1 VIBRATION TESTING
- 4.2 THERMAL - HYDRAULIC TESTING AND ANALYSIS
- 4.3 MATERIALS TESTING AND SELECTION
- 4.4 THERMAL FATIGUE ANALYSIS

5.0 OTHER SPARGER DESIGNS

6.0 ULTRASONIC TESTING AND RECOMMENDED INSPECTIONS

7.0 IMPLEMENTATION

8.0 SAFETY CONSIDERATIONS

9.0 CONCLUSIONS

1.0 INTRODUCTION

By letter dated September 4, 1979, the General Electric Company (GE) submitted for staff review a topical report entitled "Boiling Water Reactor Feedwater Nozzle/Sparger Final Report, Supplement 2" (NEDE-21821-02, August 1979). The document incorporated in full the earlier reports on the same subject, NEDE-21821 (March 1978) and NEDE-21821-01 (January 1979), the related changes forwarded by GE letters dated March 1, 1979 and March 20, 1979, and changes in response to the staff's recent comments on NEDE-21821-01. The report provides generic information relative to (1) the design of a modified feedwater sparger and thermal sleeve assembly; (2) testing and analysis of this design; (3) analysis of nozzle cracking, including the identification of the causes of such cracking and the safety implications; (4) analysis of other modifications, such as nozzle clad removal and system changes, which would prevent cracking or decrease the rate of crack propagation; and (5) discussion of nondestructive examination (NDE) methods and recommended applications for inspection of BWR nozzles. The reports did not address the related control rod drive return line nozzle problem. This matter is being handled separately by the NRC and GE.

The NRC topical report review included the generic design and analyses of the modified sparger/sleeve assembly, descriptions and analyses of the other available solutions and verification of solution effectiveness (including identification of the causes of cracking). The review also assessed the ability of the sparger and unclad nozzle regions to withstand BWR environmental conditions during design lifetimes, the capability and limitations of the proposed inservice inspection program and the proposed inspection frequency.

2.0 BACKGROUND

Of the 23 operating BWRs in the United States with feedwater nozzle/sparger systems (normally 4 nozzles/spargers per BWR; nominal nozzle diameter 10 to 12 inches), 22 have been inspected to date and cracks have been discovered in the feedwater nozzle blend radius or bore of 18. Although most cracks have been relatively superficial, a few grew to 3/4" total depth (including cladding) and one vessel exhibited cracks which penetrated the base metal to a total depth of approximately 1.5 inches. Crack initiation results from high cycle thermal fatigue as the internal water temperature fluctuates in the thermal sleeve-nozzle annular region during periods of low feedwater temperature when the flow may be unsteady and intermittent. Once initiated, the cracks are driven deeper by the larger pressure and thermal cycles associated with startup and shutdown.

Fracture analyses indicate that the cracks found to date in the feedwater nozzles constitute a potential safety problem because the observed rate of crack growth is such that the margin of safety against fracture would be reduced below acceptable values unless the cracks are detected and removed periodically. In cases of severe cracking, repair by grindout could be repeated only a few times before ASME Code limits for nozzle reinforcement were exceeded. Repair by weld buildup in the grindout region has not been demonstrated as yet to be acceptable to the NRC. In addition, inspection and removal of cracks by grinding involves radiation exposure to personnel and is deemed unacceptable as a long-term solution.

Extensive and long-term study of the causes of the problem and the efficacy of the modified sparger design has been undertaken independently by the General Electric Company (GE) and the NRC staff. The GE studies have been documented in the report evaluated herein which represents a summation of the engineering design, test, and development effort undertaken and accomplished by GE. The NRC staff has worked closely with GE and others in the effort to understand and resolve the complex safety issue. The NRC staff published interim guidance in the form of NUREG-0312, "Interim Technical Report on BWR Feedwater and Control Rod Drive Return Line Nozzle Cracking." This guidance will be superseded by the NUREG document to be issued at the conclusion of the NRC Staff's generic study.

The safety objective of these efforts was to assure long-term reactor vessel integrity. Effective sparger design also would permit an increase in the interval between in-vessel surface examinations. We have concluded that the safety objective has been met.

3.0 DESCRIPTION OF SOLUTIONS

3.1 GENERAL ELECTRIC COMPANY TRIPLE SLEEVE SPARGER DESIGN

Most of the BWRs in operation today went into service originally with loose-fitting sparger thermal sleeves. After discovery, by inspection, of the various cracking problems caused by the loose-fit design, licensees replaced the original spargers with an interim, interference fit design. No domestic BWR is operating with a loose-fit design today.

Although the interim interference fit design can reduce bypass leakage flow, its long-term effectiveness has been called to question because the interference fit may degrade with time.

Because of these problems, GE has designed an "improved interference fit sparger" as described in Chapter 3 of NEDE-21821-02. This sparger design, also called the "triple sleeve sparger" in this report, has been recommended by GE as a replacement for the interim single sleeve design mentioned above.

The improved interference fit sparger design was based on the service experience discussed above and on the thermal-hydraulic test results described both in Chapter 4 of NEDE-21821-02 and in Section 4.0 of this evaluation. The tests confirmed the postulated crack initiation and growth mechanisms and served as input in designs to mitigate such cracking.

The tests revealed that, for the original loose fit design, the cause of thermal cycling was:

> ". . . primarily . . . leakage flow passing between the thermal sleeve and safe end. This leakage flow, which is at feedwater temperature, mixes in a turbulent manner with hot downcomer flow in the annulus between the nozzle and thermal sleeve. The mixing fluid impinges on the nozzle wall causing thermal cycling of the metal surface. It has been determined by test and field measurement at Millstone [1] and Brown's Ferry 2 that the metal temperature cycling, with leakage present, has a magnitude of up to 50% of the difference in temperature between the feedwater and downcomer water. This cycling occurs with frequencies between 0.1 Hz and 1 Hz and thus can initiate cracking rapidly. The exact time to crack initiation depends on several factors including the duration of operation with low feedwater temperature."

The triple sleeve sparger was designed to prevent the thermal cycling phenomena, thus significantly reducing the likelihood of crack initiation within the lifetime of the plant. The sparger utilizes three concentric thermal sleeves, the innnermost of which conducts feedwater to the sparger arms. The arms are attached to the sleeve by a forged tee, fastened to the reactor vessel wall at their end points by brackets, and are designed to deliver feedwater uniformly to the annular area between the core shroud and the vessel wall. In so doing, they provide subcooling for the jet pumps and help maintain a uniform core power distribution.

Bypass leakage flow in the feedwater nozzle bore will be reduced substantially by two piston-ring seals and an interference fit. Thus thermal cycling will essentially be eliminated.

The first, or upstream, thermal sleeve piston-ring seal forms the primary seal between the innermost sleeve and the nozzle bore. Water leaking past this seal would pass into the vessel through the annulus between the inner sleeve and the "mid-thermal" (GE terminology) sleeve, which is supported at its upstream end by a slotted attachment to the inner sleeve. Attached to the "mid-thermal" sleeve is an outer sleeve which is fitted tightly in the nozzle bore at its upstream end to prevent vibratory motion of the sparger assembly. The secondary piston-ring seal at that tight interference joint reduces potential bypass flow to nearly zero because the pressure drop is very low across the secondary seal.

The sparger arms were modified in the triple sleeve sparger design in one important respect. Flow is no longer discharged into the vessel through holes in the sides of the sparger arms, but through elbows mounted on top. The elbows are fitted with converging discharge nozzles. These features reduce temperature stratification in the sparger and flow separation around the periphery of the flow holes at low feedwater flow (It had been observed that the cold feedwater moved along the bottom of the pipe during low flow producing a very large top-to-bottom temperature differential. The resulting thermal stresses caused thermal sleeve cracking. Similarly, the flow separation had caused flow hole cracking). Sparger arm cracking, which was another problem with the loose-fit design, had been solved earlier by use of a forged tee to replace the older tee box.

The NRC staff considered from two aspects the ability of the triple sleeve sparger to perform its function. These aspects were its effectiveness in reducing thermal cycling of the nozzle bore and blend radius and its durability. The two considerations influence both the criteria for inspection frequency and the inspection method to be recommended in the forthcoming NUREG report. Effectiveness will be discussed in Section 4.

Regarding durability, the principal consideration is the loss of sealing ability as a result of wear or corrosion. There is sufficient experience to justify the assertion that the design is acceptable in this regard, although corrosion of carbon steel safe ends under the piston ring seal is mentioned by GE as a potential problem warranting introduction of special cladding (high ferrite, unsensitized 308L stainless steel) on the sealing surface in new plants.

The staff also feels there is some question about the durability and fatigue resistance of the triple sleeve assembly, especially at the slotted connection of the "mid-thermal" sleeve to the inner sleeve. No specific weakness has been identified but past experience with feedwater sparger problems indicates that it will be prudent to monitor the performance of the first units to be installed, and especially to monitor for leakage.

3.2 CLAD REMOVAL

The inner surface of licensed BWR reactor vessels, including feedwater nozzles, was clad with stainless steel. The weld-deposited overlay was originally installed for corrosion protection of the carbon steel vessel and to minimize rust accumulation in the vessel water.

However, removal of nozzle cladding coincident with installation of the improved sparger design is now recommended by the General Electric Company. Analyses show that clad removal results in about a factor of two reduction in cyclic thermal stress at the surface of the metal. The net effect of clad removal is to prolong the time to crack initiation if the magnitude of temperature cycling is low. Removal of the cladding also increases the number of startup/shutdown cycles required to grow fatigue cracks to the limiting depth as specified by the applicable code. This results from the elimination of stresses due to differential thermal expansion of the stainless steel and carbon steel near the surface.

Removing the cladding also facilitates the interpretation of ultrasonic (UT) signals by eliminating the clad-base-metal interface, a common source of spurious indications. It removes any metal that may have suffered fatigue damage.

Because some base metal is removed along with the clad (amounts range from 0.1 to 0.5 inches of base metal removal), a recheck of the cross-sectional area available for nozzle reinforcement is required to verify that ASME Code rules will still be met. The limited experience to date has indicated that this should not be a serious problem, provided the clad removal machining operation is performed with full regard for the as-fabricated dimensions and alignments of the nozzles and safe ends.

Stress corrosion cracking of the cladding and base metal was considered by GE with the conclusion that clad removal had a positive effect. The stainless steel clad in some vessels has a relatively low ferrite content; low enough to render it susceptible to stress corrosion cracking. Although no instances of feedwater nozzle cracking have been attributed to stress corrosion to date, GE believes it possible. On the other hand, it was stated that the chances for base metal cracking by the BWR environment is slight. Pitting or general corrosion of the exposed base metal is not expected to be a problem, because there have been no corrosion problems with partially-clad nozzles nor with the areas in existing nozzles where grinding to remove cracks had removed the cladding and exposed base metal.

The BWR reactor vessels for plants undergoing licensing review contain unclad feedwater nozzles. The feedwater nozzle areas of future BWR vessels also will be unclad. Regarding clad removal at existing plants, machine tools have been developed by GE and others to remove the cladding from the nozzle blend radius and bore to prepare the seating surfaces for the seals on the thermal sleeve. Typical clad thickness encountered in grinding out cracks was 0.25 in. (The range was from 0.20 to over 0.50 inches.)

Based on its own independent assessment, the staff concurs with the GE assertion that clad removal offers a net benefit toward the goal of minimizing the likelihood of crack initiation. For some reactors with high (420°F) operating feedwater temperatures, the combination of clad removal and a zero leakage triple sleeve sparger may be all that is necessary to suppress cracking within the design lifetime. Other reactors with lower feedwater temperatures may require systems changes as noted in Section 3.3.

3.3 MODIFICATIONS TO FLUID SYSTEMS AND OPERATING PROCEDURES

3.3.1 Objectives

NEDE-21821-02 indicated that the overall objectives of the various solutions for the BWR nozzle cracking problem were: (1) to prevent the initiation of cracks and (2) to limit crack growth to less than 10% of the wall thickness during the life of the plant, if they do initiate. GE considers limiting crack growth to be the more important objective. However, these objectives may not be met for all operating plants if the cladding were removed and a single sleeve sparger with zero leakage were installed. This is particularly true for those plants with lower feedwater temperatures during full power operation (such as 340°F rather than 425°F). These objectives could be met for these plants by clad removal and with a triple sleeve sparger with zero leakage. However, the sparger performance is very sensitive to leakage and it is not certain that leakage would be avoided during the life of the plant. Therefore, it is advisable to augment clad removal and sparger redesign with modifications to fluid systems and changes to operating procedures, in order to further reduce thermal cycling within the feedwater nozzle.

Although clad removal and sparger redesign may not, by themselves, be accepted as a general solution for all BWRs, GE analyses indicate that system and procedural changes alone would not be sufficient to meet the overall objectives. Therefore, a particular solution must be derived for each BWR and will in most cases consist of clad removal, a new sparger design and some system and procedural changes.

3.3.2 Specific System Modifications

3.3.2.1 Low Flow Controller

The low flow controller would be used to control feedwater flow over a range of flows from 0.5% to 10% of rated flow for the purpose of reducing thermal cycling during periods of low feedwater flow and high subcooling. Analyses show that system changes in general do not make a large contribution to delaying crack initiation. However, there is also analytical evidence which shows that a low flow controller would be necessary to limit crack growth to less than one inch in 40 years.

3.3.2.2 Reactor Water Cleanup System (RWCU)

This system modification would involve rerouting the discharge of the RWCU to deliver the flow to each feedwater nozzle. Although NEDE-21821-02 shows that system changes in general do not make a large contribution to delaying crack initiation, it does show that rerouting the RWCU can decrease the usage factor with respect to crack initiation from .70 to .46. This would represent a significant usage factor reduction in those plants where rerouting is feasible.

3.3.2.3 Other System Modifications

NEDE-21821-02 presented an evaluation of the low flow controller and the rerouting of the RWCU in terms of limiting crack initiation and crack growth. Although only these two possible modifications were evaluated, other solutions may exist and are not excluded by this GE report.

3.3.3 Plant Operating Procedures

NEDE-21821-02 suggests that there are many improvements that can be implemented to reduce thermal cycling in the feedwater nozzles. A "Proposed Alternate Operating Procedure" combined with some system modifications was evaluated and the results given in Table 4-31. The proposed procedure consists of the following:

1. RWCU flow would be directed to all feedwater nozzles at maximum flow rate and exit temperature during all low flow conditions prior to turbine loading. Some plant designs would require piping changes to achieve this.

2. The turbine would be accelerated, synchronized and loaded at a reduced reactor pressure of 600 psig (instead of 1000 psig). Main steam bypass just prior to turbine acceleration would be the minimum compatible with that action (approximately 5%). Operating plant procedure changes would be required to achieve this. To our knowledge, early turbine roll has not been attempted yet at any operating facility.

3. Turbine extraction heaters (at least the top heater) would be in service at the time of, or before, turbine loading to 5%. Most feedwater train designs, including heater drain characteristics, are compatible with this operation. Some heater equipment change might be required in a few cases to achieve this.

4. For start-ups and shut-downs, the feedwater control system would be capable of low flow control sufficient to eliminate on-off feedwater operation and with sufficient controllability to preclude greater than 25°F peak-to-peak mixture temperature variations during steady demand. Though this feature contributes some benefit toward reduction of high cycle fatigue, it

is the single most effective feature applied to mitigate the low cycle fatigue problem discussed in other sections.

5. Plant operating procedures generally would be modified to minimize the total time spent at large subcooling and to reduce the subcooling experienced for long periods of time, particularly at high feedwater flow rates.

The evaluation presented in NEDE-21821-02 showed that the largest improvement in the crack initiation usage factor would be achieved by rerouting of the RWCU, i.e., a reduction in usage factor from .70 to .46. The early turbine roll (No. 2) and the early feedwater heating (No. 3) each would reduce the usage factor by about 10 percent. The low-flow controller would have little effect on the crack initiation usage factor but is necessary for limiting crack growth.

Based on its review, the staff concurs with the GE assessment of system modifications and the benefits to be achieved by their installation. Plant-specific review will be necessary in order to determine what combination of modifications is acceptable and necessary.

4.0 VERIFICATION OF GE TRIPLE SLEEVE SPARGER DESIGN AS AN EFFECTIVE SOLUTION

4.1 Vibration Testing

One of the problems associated with the original loose-fit sparger design was flow-induced vibration. Such vibration contributed to the formation of cracks at the junction of the sparger arms and the thermal sleeve.

The vibration was induced by the flow of water through the gap between the thermal sleeve and the nozzle safe end. The fatigue damage was aggravated by the geometry of the original tee box junction between the thermal sleeve and sparger arms.

The gap, and therefore the flow of leakage water, has been eliminated in the interim interference fit design by the tight fit between the nozzle and thermal sleeve. The geometry of the sparger/sleeve junction has been modified in almost all existing plants by the use of the forged tee, which provides less flow resistance. However, the interim interference fit is not expected to retain its tightness against accumulated thermal working of the nozzle and thermal sleeve. Therefore, as stated in Section 3, GE has recommended the installation of the triple sleeve sparger, which utilizes piston ring seals in addition to an interference fit for the purpose of eliminating leakage flow over the long term.

Testing was required to identify the vibration characteristics of the triple sleeve sparger design to verify that this sparger would not experience conditions similar to those which resulted in problems with the original designs. The experimental goal was to demonstrate that the sparger was vibration-free during all operating flow regimes, thus helping to assure long sparger operating life.

As described in Chapter 4 of NEDE-21821-02, GE's test facility was able to accommodate a full-scale sparger, and several different variations of the triple sleeve design were tested. The recirculating loop providing water to the sparger could deliver 5300 gpm flow at approximately 32 psid across the sparger.

The experiments involved flow sweeping (modifying flow slowly and steadily) from minimum to maximum anticipated flow. During the flow sweep, instruments recorded strain, acceleration, and displacement concurrently with differential pressure across the sparger. The instrumentation included accelerometers (radial, vertical, and circumferential), bending strain gauges (vertical, horizontal, and radial), and displacement transducers to sense vertical, radial, and circumferential motion.

The intent of the program was to simulate all loadings that the sparger would see during all phases of reactor operation, including self-generated and externally applied loads. To obtain a conservative range of results, leakage flow was an active test variable in the five mockups, varying from essentially none to substantial flow.

In general, the vibration levels of the triple sleeve sparger were acceptably low for all flow and load variations tested. Spectrum analyses were performed where strain or displacement sensor amplitude

readings were higher than normal. These analyses were to determine the values of strain or displacement at single fundamental response frequencies. Care also was taken to allow sufficient time during sweep testing so that any tendency for vibration amplitude build-up from structural resonance would be noticed. In all cases, the experimental values of strain and displacement were low.

The tests also indicate that, assuming all external driving forces were modeled in the testing, the triple sleeve sparger is free of vibrational problems. We conclude that the tests were representative, the results acceptable, and that this design has solved one of the problems recognized in the original loose-fit design and potentially present in the interim interference-fit design. Therefore, the design is acceptable from this aspect.

4.2 Thermal-Hydraulic Testing and Analysis

Although the cause of crack initiation was generally assumed to be thermal fatigue resulting primarily from leakage flow passing betw the thermal sleeve and safe end, extensive testing was considered neces y to characterize the flow instability and to test the various desig. solutions under consideration.

The open tank used by GE for vibration testing of full size feedwater spargers was modified to provide a 100°F temperature difference between the simulated separator downcomer flow and the feedwater flow. The nozzle area was instrumented for temperature measurement by the same type of sensors as those used in operating reactors (Millstone 1 and Browns Ferry 2). The natural bypass leakage around the thermal sleeve was prevented by O-ring seals and controlled leakage was introduced at taps around the safe end circumference. The tests run in this two-temperature test ($2T^2$) facility provided the basis for the explanation by GE regarding the causes of feedwater nozzle cracks, and the $2T^2$ facility was the proving ground for various proposed sparger design alternatives to stop the thermal cycling.

A typical test of a given configuration required several runs at different feedwater flows. From the temperatures taken at a given location during a 4-minute time interval, the peak-to-peak amplitude was measured and reported as a percentage of the available temperature difference at that instant.

In the first tests, the facility was fitted with a loose-fit T-box sparger sleeve like the original Millstone 1 sparger. The pattern of temperature cycling was found to be similar to that at Millstone 1, and the amplitude of thermal cycling was in proportion to the difference in the available ΔT (difference between reactor and feedwater temperatures). Substantially greater ΔT exists in an operating reactor.

Some of the significant test results were:

1. For large bypass leakage flow and low feedwater flow, the cyclic ΔT of the water near the nozzle blend radius was nearly 100% of the available ΔT.

2. The amplitude of the cyclic temperature at the blend radius metal surface was approximately one-half of the water temperature amplitude.

3. Cyclic ΔT midway along the nozzle bore was dependent on the leakage flow rate, which apparently determined where the mixing of hot and cold water was taking place. For the forged tee sparger, the cyclic ΔT results for the bore and blend radius were about equal at low to medium leakage rates. Above the medium rate, the values for the bore dropped off sharply.

4. With no leakage, the cyclic ΔT was about 20 percent at low sparger flow, increasing to 30-40 percent at high flow. A concentric double thermal sleeve reduced this to 10 percent.

To confirm that thermal fatigue was the cause of the feedwater nozzle cracking, tests were run on large rectangular specimens containing a central hole through which hot and cold water flowed alternately to produce thermal cycling while the specimen was under a tensile load. Cracks were initiated by this method. The number of cycles required to produce a crack was reduced when the hole surface was clad with stainless steel, and was least when the clad had been heavily coldworked by a chamfering operation.

As noted above, various design alternatives were tested in the $2T^2$ program, such as:

1. A vortex suppressor, consisting of a vertical plate fastened beneath the forged tee in a plane containing the axes of the nozzle and the vessel, was tested to see if it would reduce thermal cycling of the blend radius region by preventing changes in the leakage flow path from one side to the other. The vortex suppressor was effective in reducing thermal cycling when there was significant leakage flow, but was considered unnecessary with the triple-sleeve design, which minimized leakage.

2. A flow baffle, consisting of a disk placed around the sparger sleeve at the vessel ID to close the annulus opening, was tested but the idea was abandoned when the baffle was found to cause severe stratification of the water in the annulus region near the safe end.

3. A hot flushing concept was tested to determine whether the introduction of hot water at the safe end to flush cold water from the annulus would be beneficial. Results indicated that the required flow of hot water would be quite high and other concepts were deemed to be preferable.

4. A concentric double thermal sleeve design was tried in various configurations in the evolution of the final configuration of the triple thermal sleeve design.

Finally, the $2T^2$ facility yielded heat transfer data useful for calculating operating conditions other than those simulated in the tests. Comparisons also were made between the in-reactor measurements at

Millstone 1 and Browns Ferry 2. Based on comparison of the relationship of metal temperature thermal cycling to that of the water in the annulus, the heat transfer coefficients were considered to be surprisingly high.

Confirmatory tests of the effectiveness of the triple sleeve sparger design were performed in a GE test facility near Pacific Gas & Electric Company's Moss Landing Power Plant in California. Feedwater and superheated steam were obtained to provide test temperatures that matched BWR operating conditions. The test was full scale with the exception of sparger arm reduction in length to fit the test vessel. The Moss Landing test was required because the 2T² temperatures (70°F feedwater, 160°F reactor water) did not provide a sufficient density difference to simulate the cold feedwater stratification in an operating plant. The Moss Landing facility did accurately reproduce the temperature fluctuations found in operating reactors. Thermal cycling was shown to be reduced to acceptable levels with the triple-sleeve sparger design. The testing also showed that the thermal hydraulic performance of the triple-sleeve sparger design is acceptable.

In addition to the above confirmatory tests of thermal-hydraulic characteristics of the triple sleeve sparger, the new design also was subjected to a thermal shock test. This test, in a separate Moss Landing fixture, was intended to verify behavior of the seals and interference fit and to verify the mechanical integrity of the tested components. A total of 110 thermal shocks was imposed by heating the sparger sleeve seal region to 550°F, then quenching with 70°F water. The results revealed some tendency of the piston rings to bind in their grooves and malfunction. As a result, minor design changes were made. The interference fit relaxed from 0.023 to 0.010 inch in 20 cycles (before housing rebore to simulate corrosion of the safe end sealing surface).

The NRC staff believes that the testing done in the two-temperature test facility and at Moss Landing demonstrated that the thermal-hydraulic phenomena that caused feedwater nozzle cracking have been reproduced in the laboratory. The test results are sufficiently quantitative to provide an adequate basis for analysis of new designs. With regard to the triple-sleeve sparger design, the staff has concluded that the test results demonstrate that it should be effective in reducing thermal cycling of the feedwater nozzle bore and blend radius areas.

4.3 Materials Testing and Selection

Section 4.6 of NEDE-21821-02, entitled "Sparger Life," describes the materials selected for the triple sleeve sparger and summarizes the stress analysis and fatigue analysis that accompanied its design. Inconel 600 was chosen for the piston ring seals and the upstream end of the thermal sleeve to obtain a close match of the coefficient of expansion of the seal, the sleeve and the safe end. The triple sleeves are Type 316L stainless steel. The sleeves cannot be solution treated after welding, hence the low carbon Type 316 stainless was chosen to prevent stress corrosion cracking.

As noted in Section 3.1, the staff feels there is some question about the durability and fatigue resistance of the triple sleeve assembly,

especially at the slotted connection of the mid-thermal sleeve to the inner sleeve. Although no specific weakness has been identified, past experience with the feedwater sparger problems suggests that early inspection of the first installed units may be prudent. However, with the exception of the possible problem with the slotted connection, the staff has found the selection of materials to be satisfactory.

4.4 Thermal Fatigue Analysis

4.4.1 Objective

General Electric performed an extensive fatigue analysis as part of the triple-sleeve sparger qualification process. The purposes were: (1) comparisons of the various sparger designs; (2) determination of advantages accrued by clad removal, and; (3) determination of effects of system changes proposed to mitigate thermal cycling. The primary analysis concerned crack initiation resulting from high cycle fatigue. Fatigue crack growth from an assumed initial 0.25-inch deep flaw also was analyzed. The driving force for the low-cycle fatigue crack growth was assumed to be related to startups, shutdowns, and plant transients.

4.4.2 Crack Initiation Analysis

The first step in the quantification process was the development, from the many records (operating reactor and previously-described $2T^2$ and Moss Landing tests) of temperature versus time, of what GE termed a thermal fatigue "load" spectrum. Thermal cycles were counted during a 240 second period, utilizing the "ordered overall range" approach described in NEDE-21821-02. The result was a "load" spectrum in which the ordinate (vertical) axis was the screening (minimum) amplitude expressed as a percentage of the peak-to-peak amplitude, and the abscissa (horizontal) was the number of half-cycles with amplitude greater than the screening level. Because each individual spectrum seemed to have similar frequency content, GE used a single envelope curve which included all of the spectra.

The "ordered overall range" approach provided results which were different than the 1.0 Hz frequency assumed at the peak amplitude in the original GE analyses. As an example, the envelope spectrum amplitude at 1.0 Hz was only 20% of the peak-to-peak amplitude, and the large amplitude thermal cycles (greater than 95% of available ΔT peak-to-peak) occurred only about once every 100 seconds.

The next step in the GE analysis was the extension of ASME Section III fatigue S-N curves to cover the GE region of interest and to serve as design basis curves. The resulting curves developed by GE extended Figures I-9.1 and I-9.2 of ASME Section III beyond 10^6 cycles to 10^{12} cycles.

Using the modified curves, a linear cumulative damage rule, and the load spectrum determined from the "ordered overall range" approach, GE derived the cumulative fatigue damage (usage factor) per 1000 hours. The derivation included predictions at various peak

alternating stresses and was accomplished for both the nozzle cladding (stainless steel) and base material (low alloy carbon steel).

The peak alternating stresses used in the derivation were obtained directly from measured values of cyclic temperature difference as a percentage of the available temperature difference (T reactor - T feedwater). The temperature difference data came from the Moss Landing test results.

Finally, it was necessary to know the amount of time spent at various reactor temperature differentials. Two time-temperature flow maps were given in NEDE-21821-02. The first was a "reference procedure" characteristic of the present operating mode of BWRs and the second a "proposed alternate [sic] operating procedure" containing certain system changes and procedural changes as described in Section 3.3. The probability of crack initiation was evaluated in terms of the fatigue usage factor for several combinations of sparger design, feedwater temperature and operating procedure. These were summarized in NEDE-21821-02.

The conclusions drawn by GE from comparison of tabulated fatigue usage factors for the various combinations of proposed solutions included the following:

1. Predicted crack initiation times were in general agreement with cracking observations at plants which had the original loose-fit sparger design. This provided assurance of the reasonableness of the analytical method.

2. As anticipated, leakage bypass flow is an extremely important variable, as is the temperature difference T reactor - T feedwater. For example, in the case of the triple-sleeve sparger installed after clad removal, GE predicted no crack initiation in 40 years with full power feedwater temperature of 420°F and leakage held to a maximum of 1 gpm. If, however, leakage exceeds 1 gpm or the feedwater temperature during power operations is as low as 340°F, crack initiation is predicted during the plant's design lifetime.

3. An unclad nozzle with the welded single sleeve sparger designed for zero leakage should operate for 40 years without crack initiation if operating feedwater temperature is 420°F. The fatigue usage factor on such a nozzle could be reduced from 0.77 to 0.46 by adopting GE's proposed alternative operating procedures.

4.4.3 Crack Growth Analysis

As a first step in the fatigue crack growth evaluation, nozzle stresses were calculated using a finite element model. This allowed a systematic evaluation of the effect of changes in the heat transfer coefficient produced by changes in sparger design. A turbine roll event, involving a step change in feedwater temperature from 550°F to 100°F at 25% of rated feedwater flow, was used to model a

thermal transient. Maximum metal surface stresses developed typically in 2 to 4 minutes, but longer times were experienced when the heat transfer coefficient was low. Therefore, in order to determine maximum values, it was necessary to compute stress intensity factors as a function of time for each value of assumed crack depth. The initial flaw was assumed to be a semicircle 0.25-inch deep.

Based on recent data concerning reactor thermal operating history, GE made a refinement in the original model of the low frequency stress cycles. That model had defined a startup/shutdown cycle as the combination of one pressure cycle (0 to 1050 psi and return to 0) and six thermal cycles in which feedwater temperature cycled between 100°F and 550°F. The revised model comprises three scrams to low pressure hot standby and return to power for each startup/ shutdown cycle. A reactor lifetime is considered to include 130 startup/ shutdown cycles and 390 scram cycles. A scram is assumed to include 60 on-off feedwater flow cycles during which feedwater temperature varies from 100°F to 300°F and 12 such cycles with temperature variation from 100°F to 430°F.

The new model for crack growth was compared with known data from operating reactors. Specifically, the growth of a 0.25 inch crack was compared with the crack growth observations at Pilgrim, Nine Mile Point and a foreign reactor when each utilized the original loosefit sparger. A best fit curve was used for the relationship of da/dN (crack growth rate per cycle) as a function of effective stress intensity factor. Good agreement was obtained with predictions based on a heat transfer coefficient of 2000 BTU/HR-ft^2-°F for the original loose-fit sparger.

The predictions of fatigue crack growth were then used in the evaluation of sparger designs and the determination of the need for a low-flow feedwater controller. Results are described in Section 3.3, above.

4.4.4 Staff Evaluation and Conclusions

The staff has reviewed the GE analyses discussed above and has concluded that the methods used and the results are acceptable. We have further concluded that the results of the crack initiation and growth analyses may be applied in establishing generic inservice inspection requirements.

5.0 OTHER SPARGER DESIGNS

The GE report briefly discusses three alternative sparger designs. The first of these, the welded thermal sleeve, is in use at three operating reactors (Duane Arnold, Brunswick Unit No. 1, and Hatch Unit No. 2) and has been installed in two reactors (Zimmer & WPPSS-2) under inital licensing review.

The staff generally agrees with the GE assessment that a configuration with the thermal sleeve welded to the nozzle safe end provides some assurance of protection against crack initation if feedwater temperature during operation is at least 420°F. However, as GE noted in the report, there are several drawbacks to this particular design. Not noted is the lack of suitable inspectability of the thermal sleeve-to-nozzle weld. The staff's concern is that weld failure after several years could result in substantial bore cracking prior to the appearance of cracking on the accessible areas of the blend radius. The staff is still devoting effort to the resolution of the inservice inspection issue, as noted in the introduction and in Section 6.0 of this SER. However, dye penetrant inspections of accessible nozzle areas (an inspection technique acceptable to the NRC staff) performed already, at Duane Arnold and Brunswick Unit No. 1, demonstrated the efficacy of the welded design early in the plant life in that no indications of cracking were found. In addition, a limited visual inspection of the sleeve-to-nozzle weld was performed at Duane Arnold, where sparger design allowed such inspection. The weld was reported to be intact. Although these early inspection results indicate satisfactory weld integrity, the inspection program will still require examinations to assure continued integrity later in plant life.

The second design cited by General Electric is the single piston ring design, which is simply an augmentation of the interference fit sleeve design and would serve similarly to the interference fit as an interim "fix" until its efficacy has been demonstrated by field experience. GE acknowledges this in their statement that the ". . . interference fit will not be lost during the limited design life of this component." The only operating plants with an installed sparger/sleeve similar to this are the Monticello Nuclear Generating Plant and Browns Ferry Unit 1. The staff will continue to review nozzle inspections at these plants in order to determine the efficacy of this particular design.

The third design discussed by GE is the interference fit thermal sleeve design, which was the first counter-measure to the cracking resulting from loose-fit spargers and is the interim solution mentioned herein. Experience has shown that the interference fit can prevent crack initiation but its longevity is limited as it relaxes with time. Therefore, although it is acceptable on an interim basis, the staff does not regard it as a long-term replacement without relatively frequent inservice inspection.

Not mentioned in the report, since they are beyond GE's responsibility, are other approved and currently operating designs at Nine Mile Point and Oyster Creek. The staff, while accepting the GE triple-sleeve, double piston ring design as an effective long-term solution, will review other proposed designs for acceptability.

6.0 ULTRASONIC TESTING AND RECOMMENDED INSPECTION

6.1 Introduction

Chapter 6 of NEDE-21821-02, entitled "Ultrasonic Testing," describes the General Electric UT procedure and results of feedwater nozzle examinations performed by GE. Chapter 7, entitled "Recommended Inspections," proposes an inservice inspection (ISI) program for plants with either the triple sleeve sparger or the welded sparger. The proposed ISI program differs from the recommendations of the NRC's interim guidance document NUREG-0312 by proposing to eliminate liquid penetrant (PT) examinations and to substitute UT examinations at less frequent intervals.

6.2 Staff Evaluation and Conclusions

The selection of conservative NDE methods and appropriate inspection intervals is dependent upon the nature of the flaws under investigation. Thermal fatigue cracks detected in the feedwater nozzle blend radius and the bore region generally have been as deep as 1/2" to 3/4" total depth (including cladding) and up to twelve inches in length. Some have been deeper.

The effectiveness of UT inspection is adversely affected by the complex geometry, relatively long examination metal paths, and cladding interference encountered in feedwater nozzle inspections.

Currently, the only acceptable method for conclusively detecting, locating and characterizing existing flaws is PT of the inner surface and removal of cracks by local grinding. However, PT inspections and removal of cracks by grinding have resulted in significant personnel radiation exposure and plant shutdown time. An objective of current NDE technology programs is to develop a reliable and effective UT procedure that can be performed from the vessel exterior surface.

Section XI of the ASME Code requires periodic volumetric examination of the feedwater nozzle region. However, a specific recommended procedure has not yet been published. To implement NUREG-0312 as required by the staff, licensees are performing augmented ISI programs at designated intervals of operation, including supplemental PT and UT inspections during scheduled outages. There are currently many different UT procedures in use. Evaluation of plant specific practices has been necessary because the differences in nozzle geometries combined with certain inspection variables can influence the examination results. To date, no specific UT technique is acceptable to the NRC as a sole method of characterizing fatigue cracks. However, there is an extensive effort underway to develop such a technique.

As a result of there being no repeatable, reliable UT technique which has requisite sensitivity, the staff does not at this time accept UT examination as the sole means of assuring nozzle integrity. We are concerned, of course, that continued PT examinations result in significant radiation exposure for licensee and inspection company employees. Therefore, we will adopt a realistic program which provides credit for licensee actions to minimize the possibility of crack initiation and growth. Such actions

will extend the time between PT inspections. The program is discussed briefly in Section 6.4 and will be published as part of the forthcoming NUREG document.

The staff has concluded that Chapters 6 and 7 of NEDE-21821-02 are unacceptable in their entirety and may not be cited as a reference in licensing actions by either licensees or applicants. For such licensing actions, the staff will provide specific guidance, using NUREG-0312 until the forthcoming NUREG is issued.

6.3 Summary of Continuing Major Activities

Inspection companies, EPRI, and an ASME Code working group are continuing major programs to develop a reliable and effective UT procedure for the nozzle inner radius examination. The primary objective has been directed toward the detection and location of flaws. Current examination techniques are not sufficiently developed to characterize the dimension or shape of indications with an acceptable degree of accuracy. The only interpretation presently available is that the minimum threshhold depth of crack has been exceeded. The relatively long ultrasonic wave metal paths, inherent beam spread, and cladding make quantification of the indication dimensions extremely difficult and could require advancements beyond the state-of-the-art technology. The difficulty will be eased somewhat because cladding will be removed as part of the installation of the triple-sleeve sparger.

A comprehensive correlation of UT indications on actual thermal fatigue cracks compared with PT verification could demonstrate that all cracks that could affect the structural integrity of the nozzle are detectable in any location. The distribution of actual flaws compared to recorded indications and the minimum detectable flaw depth for a specific UT procedure also would be established. This type of data may become available during planned clad removal projects. In addition, a full size nozzle mockup with laboratory-induced thermal fatigue cracks recently has been fabricated under a project sponsored by the Electric Power Research Institute (EPRI). A systematic investigation of the various UT procedures on such a mockup could identify the most effective procedure in terms of detectability, reproducibility, and efficiency to minimize personnel radiation exposure. The results of a similar survey, using another nozzle mockup with machined notches, are being evaluated by EPRI. The availability of these full size test specimens is important for procedure and personnel qualification and training of operators under simulated plant environments. The most reliable plant inspection procedures use a nozzle mockup as the calibration block.

The ASME Code Section XI established a Task Group to define requirements for a UT procedure applicable to inner radius examinations. The availability of a full size mockup and additional supporting data on the UT response from actual characterized fatigue cracks should provide the basis for revisions to the ASME Code. The staff will follow the UT development programs directed toward demonstrating an effective UT procedure and will issue appropriate further guidance beyond that to be included in the NUREG document which completes A-10 study.

6.4 Recommended Inspections

The staff will continue to evaluate plant-specific leak test and nondestructive examination requirements on a case-by-case basis. PT of the inner surface and, if necessary, removal of cracks by grinding, is the only demonstrated method to conclusively detect, locate and characterize flaws. The installation of an acceptable feedwater sparger and modifications such as clad removal and system changes should prevent cracking or decrease the rate of crack propagation. Therefore, the current inspection interval between PT examination will be increased for plants which have incorporated acceptable modifications.

The staff will provide further guidance on acceptable inservice leak test and NDE methods and inspection intervals.

7.0 IMPLEMENTATION

Chapter 8 of NEDE-21821-02 is a brief discussion of the GE recommendations regarding the implementation of physical and operational modifications.

For plants still under construction, GE recommends that all changes be implemented prior to startup. However, where completion of physical changes would delay startup, GE recommends allowing operation for the first fuel cycle with operational changes only. Physical changes would be made during the first refueling outage.

For operating plants, GE recommends implementation of changes as soon as it is convenient, preferably during a long outage.

For plants with welded thermal sleeves, GE recommends installation of the system changes only. For those plants under construction where system changes would delay the startup, GE recommends delaying the modifications until an appropriate outage.

Regarding the implementation of physical changes for plants still under construction, we will require such changes to be accomplished prior to initial reactor operation. Radiation exposure for modification personnel thus could be avoided.

With regard to operating plants, the staff has concluded that applicable hardware and system changes should be implemented as soon as practicable. Based on the experience of plants which have already removed nozzle cladding and installed advanced design spargers, this work may be deferred until the first lengthy outage. We maintain our position as stated in the interim report, NUREG-0312 (July 1977), that, prior to completion of all physical modifications, credit will be given for other actions taken to prevent crack initiation and growth.

While the staff concurs that operating plants with welded thermal sleeves (see Section 5.0) need only implement system changes at this time, we will reserve comment on the ability of the weld and thermal sleeve/sparger to remain intact throughout the design plant life, pending confirmatory inspections.

8.0 SAFETY CONSIDERATIONS

8.1 Summary of Chapter 9, NEDE-21821-02

The approach taken by the General Electric Company in Chapter 9 to evaluate the safety significance of nozzle cracks was to determine the margin of safety (against rupture of the pressure vessel) using fracture mechanics calculations. An assumption is made that the maximum flaw size will be limited to that permitted by Section XI of the ASME Code. By those rules, for example, nozzle corner blend radius cracks could penetrate base metal to a depth of 0.95 inches in a typical case before repair would be required. Justification for this assumption is presented in the report. Fracture mechanics calculations are presented for a nozzle corner crack, a nozzle bore crack and (just in case a very large crack remains undetected) a hypothetical through-wall crack extending both above and below the nozzle. Experimental data are cited in detail to justify the reliance on linear elastic fracture mechanics (LEFM) and in particular the extension of its use to elastic-plastic conditions.

The salient features of the GE analysis include:

1. Stresses considered to act on the nozzle corner and bore were pressure stress and thermal stress. Residual stress due to the cladding was included but other residual stresses were considered to be small. Stresses related to pipe reaction forces were omitted without comment.

2. The first step in the safety analysis used a straight LEFM approach in which K_{IR} or "fracture toughness" was compared to K_I (pressure).

3. An upper shelf value of 200 ksi $\sqrt{in}$ was used for K_{IR} for temperatures 180°F greater than the reference temperature, RT_{NDT}, which was assumed to be +40°F for the nozzle material. It was stated, without supporting evidence, that 200 ksi $\sqrt{in}$ represents a "minimum upper shelf toughness for reactor vessel grade low alloy steel."

4. A thermal-hydraulic analysis showed that temperatures at the tip of postulated cracks exceeded 220°F under all conditions of normal operation when pressure and thermal stresses were high.

5. Flaw size assumed in the LEFM analysis was 0.95 in. for the nozzle corner crack and 0.71 in. for the nozzle bore crack. These values are 10 percent of the nozzle wall thickness (0.1t) in the direction of the advancing cracks.

6. To obtain a solution for K_I (pressure), GE used a three-dimensional analysis published by Gilman and Rashid, supported by the solution for an edge crack in a circular hole and by photoelastic test results published by Smith.

7. Safety margins for pressure acting alone were calculated in terms of:

$$\frac{K_{IR} = 200 \text{ ksi } \sqrt{in}}{K_I \text{ (pressure)}}$$

To be conservative, the entire pressure stress, including the peak stress caused by the geometric discontinuity effects of the nozzle opening, was considered to be primary stress. The value of K_I (pressure) was 62 ksi $\sqrt{in}$ for the "Section XI Flaw," hence the safety margin on internal pressure was approximately 3.2.

8. The second step in the safety analysis was to consider the margin of safety when, in addition to the pressure stresses, thermal stresses caused by a turbine roll event were included. A step decrease from 550°F to 100°F of the water flowing in the annulus between the sparger sleeve and nozzle bore was stated to be the most severe thermal transient for normal or upset conditions. Calculations were presented for two times in the transient - 90 seconds and 30 minutes. From the report, the ratio of K_{IR} (=200 ksi $\sqrt{in}$) to K_I (thermal) is about 1.5 to 1.6, but GE does not use this ratio in their safety analysis.

9. To express the margin of safety for cases of combined pressure and thermal stress, GE introduced a new term, "Fracture Mechanics Margin," λ.

$$\lambda = \frac{K_{IR}}{K_{IP} + 0.5\ K_{IT}}$$

Its use is justified by an analysis based on a report (ORNL-TM-5090) regarding experimental data obtained on the intermediate test vessels in the Heavy Section Steel Technology (HSST) program at Oak Ridge National Laboratory. Two of these vessels had nozzle corner cracks. The facts that thermal stresses are secondary and that through-thickness yielding occurs prior to fracture at the temperatures of interest are cited to show the conservatism of this approach. Also, a precedent from Appendix G of the ASME Code is cited, i.e., the requirement that

$$2K_{IP} + K_{IT} \leq K_{IR}$$

The values of "λ" are somewhat greater than 2.0 for the cases cited.

10. Finally, GE utilized an LEFM leak-before-break analysis in which very large cracks, one at the top and one at the bottom of the nozzle, are postulated to have escaped detection and to have grown through the wall to form a through-wall crack with the nozzle opening at its midlength. GE calculated that K_{IR} would not be exceeded under normal operating pressure until the hypothetical through-wall crack extending above and below the nozzle reached a critical length of 29 inches.

11. GE cited experimental evidence obtained by Japanese investigators in what are called the JAERI* pressure vessel tests. Nozzle corner fatigue crack growth was measured at a cyclic pressure stress (hoop) of 0 to 29 ksi at 75°F. The cracks grew through the wall by fatigue causing a leak to occur instead of a fracture. The fatigue crack growth rates also were analyzed by GE for evidence to support the fatigue evaluation of the feedwater nozzles, especially the predictability of crack growth for deep cracks. There was remarkable agreement between predictions and observations.

The conclusion reached by GE regarding safety considerations is that the recommended solutions to reduce cracking and to improve inspection methods will result in a significant reduction in the maximum expected flaw size in an operating reactor. GE believes this reduction to be so significant that, even with the presence of the maximum expected flaw in the nozzle of an operating reactor, the margin against failure of the steel will be the same as that inherent in the design, by ASME Code, of an unflawed reactor vessel.

8.2 Staff Evaluation and Conclusions

The staff agrees with the overall conclusions reached by GE and noted in 8.1, regarding safety considerations. We particularly note the mitigating circumstance, shown by analyses and testing of feedwater nozzles, that whenever pressure stresses and thermal stresses are high, the temperature of the metal in the path of an existing crack is generally high enough to provide optimum crack propagation resistance. The exception is during a vessel hydrostatic test, for which special limits are required.

Further assurance of adequate safety margins has been provided by tests of several six inch thick vessels, as part of the HSST Program at Oak Ridge National Laboratory. The models contained nozzles similar in design to the feedwater nozzles of boiling water reactors. The test results showed that the vessels exhibited greater resistance to crack propagation than had been predicted by conservative fracture mechanics analyses.

Although the staff has concluded that each step of the GE analysis is acceptable for the purposes of the generic study, we have comments regarding certain steps:

Point 3 of the GE analysis - The assumed value of 200 ksi $\sqrt{in}$ for K_{IR} of the nozzle steel at upper shelf temperatures is insufficiently substantiated by valid data. The highest measured value considered valid, according to American Society for the Testing of Materials (ASTM) Standard E-399, is 148.55 ksi $\sqrt{in}$. The result was obtained from a twelve-inch thick specimen.

*. Atomic Energy Research Institute (Refer to S. Miyazono et al., "Fatigue Behavior of Nozzles of Light Water Reactor Pressure Vessel Model", Third International Conference on Pressure Vessel Technology, ASME)

Experimen[illegible] nozzle steel have shown that its resistance to fracture, measured [illegible] of the maximum load and corresponding displacement, increases [illegible]ly with temperature above that at which the valid result noted above was measured. Because the reactor vessel is operated at temperatures higher than that at which the ASTM value was obtained, we believe GE's use of 200 ksi $\sqrt{in}$ in their conventional fracture mechanics analysis to be satisfactory.

Point 5 of the GE analysis - Maximum flaw sizes of 0.1t (t is nozzle wall thickness) were assumed in the GE analysis and justified simply on the basis that 0.1t represents a limit in Section XI of the ASME Code. The staff accepts the 0.1t limit, but bases its acceptance on knowledge of BWR operating experience with regard to the nozzle problem. Substantial data have been gathered regarding the correlation of startup/shutdown cycles with cracking severity. In addition, there is extensive service experience with the interference fit sparger serving as an interim solution prior to clad removal and installation of the triple sleeve sparger. From this body of knowledge, the staff has conservatively predicted the time for an assumed 0.25 inch flaw to grow to 0.1t and has predicated its recommendations for inservice inspection on this prediction. The staff has gained additional confidence from the GE analyses and testing related to the development of the triple sleeve sparger which will substantially limit crack initiation and growth. From these factors, the staff has concluded that the assumed 0.1t maximum flaw size is acceptable.

Point 9 of the GE analysis - The "fracture mechanics margin, λ," introduced for this analysis, is a new concept. The NRC staff accepts its use for the purpose of treatment of thermal stresses at the feedwater nozzle. GE justifies use of the concept by referring to tests of flawed six-inch thick vessels in the HSST program. The vessels, prior to burst, underwent greater through-thickness yielding than was predicted by conservative fracture mechanics analyses. The staff believes the empirical factor λ is useful and gains confidence from the knowledge that in the case of feedwater nozzles, cracks generally advance into a lower-stress region where there is high temperature and therefore greater resistance to crack propagation.

As stated above, the staff accepts the use of the GE factor λ for this analysis. However, the staff recognizes the empirical nature of this factor and may require additional justification for its use in the future, when more test information will be available.

Point 10 of the GE analysis - The staff accepts the conclusion of GE's leak-before-break analysis only when it is assumed that the flaw is a through-wall fatigue crack subjected to normal operating pressure. Leak-before-break cannot be assured, by the GE analysis, for a crack which propagates through the wall under higher than normal operating pressure. Nor is leak-before-break assured when the metal temperature in the path of the crack is lower than that (upper-shelf) which yields optimum resistance to crack propagation.

9.0 CONCLUSIONS

Based on our review and evaluation of the information provided by GE, the staff finds the GE topical report NEDE-21821-02, with specific exception of Chapters 6 and 7, acceptable as a reference in BWR licensing actions for both the modification of licensed plants and the licensing of future plants. Inservice inspection methods and frequency will be addressed by the NRC in a separate document. Separate correspondence may be required during the course of licensing actions to obtain plant-specific information from the licensee or applicant.

We have concluded that the proposed GE sparger modification, when coupled with the removal of the stainless steel cladding and feedwater system changes when necessary, provides a substantial improvement over previous GE designs. A reactor vessel thus modified will be able to operate for an extended period of time between surface examinations. Extending the interval between surface examinations will substantially reduce the radiation exposure of plant staff and contractor personnel. However, we conclude that this specific sparger configuration is not the only acceptable design. We have approved the installation and use of different configurations by other designers at two operating plants and have also approved welded configurations designed by GE. Any approved design will require some in-service verification of its continued acceptability through inspections.

For facilities now under review for an operating license, the combination of the proposed GE sparger modification, an unclad nozzle and appropriate system changes is an acceptable design. Subjects requiring further consideration and review are inservice inspection intervals and the use of leak testing and certain NDE techniques, particularly ultrasonic testing. While the NRC staff recognizes that there have been improvements in NDE technology in the past few years, we have not accepted fully the industry evaluations regarding improved flaw detection, because the effectiveness and reliability of nozzle-related UT procedures have not yet been demonstrated adequately under field conditions for real cracks. The forthcoming NUREG report (to be published at the completion of the ongoing NRC generic program related to BWR nozzle cracking problems) will define acceptable interim NDE methods and inspection intervals. The staff recognizes and encourages industry-sponsored NDE programs to demonstrate the reliability of UT techniques and will give credit for favorable results.

APPENDIX D

NRC EVALUATION OF GE-PROPOSED CIDRL ALTERNATIVE SOLUTIONS

UNITED STATES
NUCLEAR REGULATORY COMMISSION
WASHINGTON, D. C. 20555

January 28, 1980

Generic Technical Activity A-10

Mr. Richard Gridley, Manager
Fuel and Services Licensing
General Electric Company
175 Curtner Avenue
San Jose, California 95215

Dear Mr. Gridley:

Since the initial discovery of cracking in boiling water reactor (BWR) control rod drive return line (CRDRL) nozzles in early 1977, General Electric (GE) has proposed a number of solutions to the problem in the course of which several documents were submitted for NRC staff review. These documents were as follows:

1. Letter of March 14, 1979, G. G. Sherwood (GE) to V. Stello and R. Mattson (NRC) regarding calculation of CRD system return flow capacity;

2. Letter of April 9, 1979, G. G. Sherwood (GE) to V. Stello and R. Mattson (NRC) forwarding results of CRD system solenoid valve endurance testing;

3. Letter of May 1, 1979, G. G. Sherwood (GE) to V. Stello and R. Mattson (NRC) forwarding results of CRD system solenoid valve performance testing; and

4. Letter of November 2, 1979, G. G. Sherwood (GE) to R. P. Snaider (NRC) forwarding additional information as requested regarding CRD hydraulic system performance, especially with regard to corrosion products emanating from carbon steel piping.

All concerned the GE rationale for the latest proposed system modification to prevent nozzle cracking; namely, total removal of the CRDRL and cutting and capping of the CRDRL nozzle. Previous submittals had presented the bases for the other modification proposals discussed herein.

Specifically, your March 14, 1979 letter discussed the GE analysis performed after the NRC's selection of a base case for use in comparing capability to inject high pressure water into the reactor vessel when other water sources were isolated. This base case was the 1975 incident at Browns Ferry Unit No. 1, during which the CRD system sometimes was one of the only capable sources of high pressure water injection to keep the reactor core covered. The staff recognizes that the presence of this capability had not been directly assumed in any previous safety analysis. However, the critical need for the system was again revealed during the early 1979 incident at the Oyster Creek Nuclear Generating Station. During this incident the reactor vessel also was isolated from other sources of high pressure water and the CRD system makeup capability helped prevent uncovering of the active fuel.

Your analysis of March 14, 1979, included several assumptions which the NRC staff has found acceptable. Principal among these was that concurrent operation of the two CRD pumps was possible at any plant. This of course implies that there will be no electrical supply limitations and no pump net positive suction head (NPSH) limits that will be reached. Licensees and applicants will be required to demonstrate this to be valid, by testing, prior to our approving CRD return line removal.

The letters of April 9, and May 1, 1979, discussed the solenoid valve testing program initiated in response to earlier NRC concerns. The original analysis of CRDRL removal without rerouting determined that return flow to the reactor vessel from drive operation would enter CRD cooling water lines and return to the vessel through the CRD mechanisms themselves. During testing, however, you discovered that the actual path would be a reverse flow path through the insert exhaust directional control valves of the non-actuated Hydraulic Control Units. The long-term cycling of the control valves in the reverse direction was a cause of NRC concern with regard to possible deleterious effects upon the operation of the CRD hydraulic system.

In response to this concern, GE tested ten valves which had been removed from an operating reactor on which the return line had been isolated for six months. These valves were then compared against tests performed on five new valves. The results showed that the reverse flow characteristics of all valves were similar and that degradation of the valves to the point of causing system malfunction would not be expected during long-term normal operation of the system. The NRC staff is satisfied with these results.

Simulated life cycle testing also was performed on five valves, resulting in the determination that no adverse effects were caused by the backflow. The NRC staff has found this acceptable.

Your final letter of November 2, 1979, discussed in detail your response to staff concerns regarding possible degradation of the CRD system and individual CRD mechanisms because of corrosion problems from carbon steel piping. Certain modifications were suggested to solve these problems. You also discussed your recommendations regarding the installation of pressure equalizing valves in the CRD system to prevent, under a hypothetical transient, a large pressure differential across the CRD system which could result in excessively fast movement of a selected control rod. The valves also prevent flow from the carbon steel piping of the normal exhaust water header to the drive cooling water header.

We have reviewed your submittals and have concluded the following:

1. Only licensees of the following classes of plants will be allowed at this time to implement the recommendation to cut and cap with no rerouting of the CRDRL and without further analysis. Each applicable plant must demonstrate, by testing, concurrent two CRD pump operation (with one exception), satisfactory CRD system operation, required flow capability, and each will be required to install the system modifications listed in 4. below.

   a. 218" BWR/6

   b. 251" BWR/6

   c. 183" BWR/4 (only one pump needed to satisfy base case requirement)

   d. 251" BWR/4

   No modifications should be performed on operating reactors prior to issuance of the "For Comment" issue of NUREG-0619, scheduled for release in January 1980.

2. We do not accept the hypothesis that the calculations for the above plants were bounding. Therefore, prior to our approval of modification of other plant classes, we shall require analysis similar to that performed on the plant classes of 1. above. The same testing and system modifications will also be required.

3. We found the 251" BWR/5 (the fifth class analyzed in the March 14, 1979 letter) presently to be unacceptable for modification in that its calculated flow fell below the acceptable base case value. Further analysis or plant-specific testing could prove flow capacity to be acceptable.

4. We will require that the following modifications be implemented on all plants requesting the removal of the CRDRL without rerouting and those which reroute but choose to operate with CRD return line flow valved out;

   a. Installation of equalizing valves between the cooling water header and the exhaust water header.

   b. Flush ports installed at high and low points of exhaust water header piping run if carbon steel piping is retained; and

   c. Replacement of carbon steel pipe in the flow stabilizer loop with stainless steel and rerouting directly to the cooling water header.

5. Each licensee must establish readily-available operating procedures for achieving maximum CRD flow to an otherwise isolated reactor vessel.

6. Licensees who choose to reroute the CRDRL, either with or without continuous return line flow to the system being tapped into, must add the GE-recommended pressure control station to the cooling water header. This station acts to buffer hydraulic perturbations from any connected system in order to prevent pressure fluctuations in the CRD system.

Modification 4.c is based upon our decision not to accept the "do nothing" alternative addressed in your November 2, 1979 letter. We consider the "more absolute solution" (your characterization) to be the correct one and agree with your recommendation, made in accordance with this "more absolute solution", that the carbon steel piping should be eliminated. We do not accept the option of filter installation as a means of trapping corrosion particles that have a deleteriuos effect on the CRD mechanisms. Our concern is that improperly maintained filters on the cooling water header could result in heatup of drive mechanisms and the possibility of multiple drive failures of a type not previously analyzed.

Note that we have discussed only the acceptability of the latest GE recommendation discussed in the four letters. We continue to accept CRDRL re-routing to a line outside containment that in turn provides the return flow to the reactor vessel (valving out after re-routing results in other requirements - see 4. and 6. above). We also find acceptable, as a strictly interim measure, the valving out of the CRDRL. However, this will require inspection, during each refueling outage, of that portion of the line containing stagnant water. No matter which option is chosen, we will require complete inspection, by dye penetrant techniques, of the CRDRL nozzle, the apron area beneath the nozzle, and the subsequent removal of any cracks found during the inspection.

For the BWRs undergoing licensing review and designed and constructed without the CRDRL and its nozzle or modified with the CRDRL cut and capped without rerouting, we will require testing (similar to that for operating plants) to prove satisfactory system operation, return flow capability equal to or in excess of the base case requirement discussed above, and two pump operation. Applicable modifications of 4. above also must be implemented. We shall require the establishment of operating procedures for achieving maximum CRD flow to an otherwise isolated vessel. Calculations with regard to base case return flow requirements should be submitted, but in lieu of such calculations, the staff may accept reference to a bounding analysis if necessary justification is provided.

Additional guidance on this subject will be contained in NUREG-0619. This document is tentatively scheduled for publication in February 1980.

Sincerely,

Darrell G. Eisenhut

Darrell G. Eisenhut, Acting Director
Division of Operating Reactors
Office of Nuclear Reactor Regulation

APPENDIX E

RESOLUTION OF COMMENTS ADDRESSING THE "FOR COMMENT" VERSION OF NUREG-0619

1 INTRODUCTION

The "For Comment" version of NUREG-0619, dated April 1980, was distributed in May 1980. Its issuance was announced in the Federal Register of May 20, 1980, Vol. 45, No. 99, page 33751. Subsequent to its release, distribution problems prevented its timely transmittal to licensees and applicants. As a result, the public comment period was extended until July 21, 1980 by Federal Register Notice of July 10, 1980, Vol. 45, No. 134, page 46587.

2 COMMENTS RECEIVED

Comments were received from General Electric Company, Long Island Lighting Company, Northern States Power Company, Commonwealth Edison Company, and Vermont Yankee Company. Because so few comments were received, the major comments from each commenter are discussed in Section 3 below. For ease of understanding, Section 3 is further divided into two sections, one addressing comments regarding feedwater nozzles and the other addressing comments regarding control rod drive hydraulic return line nozzles.

3 SPECIFIC COMMENT REVIEWS

All comments received were reviewed; those judged to be significant are specifically addressed below. Certain comments were considered insignificant from the standpoint of requiring being addressed in the revised NUREG document. These included comments regarding typographical errors or clarification of system or component functions.

All changes to the NUREG document, whether NRC-initiated from its own review or resulting from the incorporation of comments, are marked in the right margin with vertical marginal lines. Specific comments follow.

3.1 Feedwater Nozzles

(1) General Electric Company (GE)

(a) GE commented that system changes should only be implemented based on plant-unique evaluations which demonstrate performance improvement with respect to crack initiation and growth. We have accepted that comment with regard to the low-flow controller and have modified our requirement (Section 4.2, page 16 and elsewhere) such that existing controllers meeting the GE-recommended characteristics are acceptable. In the case of reactor water cleanup (RWCU) system rerouting to provide flow to all feedwater nozzles, recent testing has proven this to be a beneficial change and we will still insist upon its implementation. However in the case of those BWRs under construction that will have higher feedwater temperatures than presently available in operating reactors, the need for system changes will be reviewed on a case-by-case basis.

(b) Another comment addressed clarification of which sparger types would be exempt from the requirement to remove at least one sparger for dye-penetrant examination. We have modified the requirement (Section 4.3.2.3, page 17) to specify that accessibility to the nozzle surface is the reason that the single-sleeve forged tee sparger is exempt from the removal requirement. Additionally, the

welded clad and welded clad-removed configurations, which also afford satisfactory accessibility, are already exempted by footnote 7 to Table 2 (page 18).

(c) A final significant comment regarding the feedwater nozzles proposed that piston-ring seal refurbishment should be based upon usage factor calculations. In its review of this comment, the NRC staff has determined that credit can be given for qualitative leakage determination from on-line systems. Section 4.3.2.4 further indicates the staff's willingness to discuss plant-specific factors, such as usage factor determination, as part of its assessment of need to inspect the nozzle surface.

(2) Long Island Lighting Company (LILCO)

LILCO commented that the NRC-proposed inservice inspection plan was too stringent with regard to the requirement for regular dye-penetrant (PT) examination on those reactor vessels with unclad nozzles that have spargers with triple thermal sleeves and two piston-ring seals. LILCO proposed instead that ultrasonic testing (UT) and visual examination be the primary means of inspecting these nozzles and that PT examination be used only if UT or visual examinations reveal "discontinuities which need corrective action." The NRC staff disagrees with this assessment. It is the staff's opinion, as stated in NUREG-0619, that present UT techniques used for feedwater nozzle applications are not capable of accurately and repeatedly characterizing flaws and quantifying their size. Although we are encouraged by the effort being made to develop reliable techniques, further work is necessary prior to NRC acceptance of UT as the sole means of nozzle examination. Therefore in-vessel PT surface examinations will still be required periodically. Regarding the proposal for visual inspection, the NRC staff cannot agree to its use on the nozzle surfaces. In the first place, accessibility for visual inspection is very limited. Second, tight fatigue cracks that have grown large enough to be detected visually on a carbon steel surface are likely to have already exceeded applicable Code limitations.

(3) Northern States Power Company (NSP)

(a) NSP provided a comment addressing proposed changes to the Monticello feedwater nozzles that will result in a configuration different from any other in use today. On the basis of these proposed changes, NSP requested that Table 2 of NUREG-0619 Part I be modified to include specific inservice inspection intervals for the proposed Monticello design.

Although the NRC staff has approved the design concept for the Monticello modification, we are not prepared to assign inspection intervals at this time. However, Table (page 18) has been modified to include a statement regarding later determination of the Monticello inspection requirements.

(b) NSP provided information regarding results of the rerouting of the RWCU system and testing of the low-pressure (600 psi) turbine roll concept. The RWCU rerouting to provide heating of feedwater in both feedwater loops has been shown to be effective and the requirement

for its implementation has been retained in NUREG-0619. However, analysis of the "early turbine roll" has shown that this technique is not a feasible means of reducing crack initiation. Page 16 has been modified to state this.

(c) NSP commented that the NRC-proposed in-vessel leak determination test probably would not be effective. The NRC staff had received that comment from others and agrees that the proposed method was unsatisfactory. It was deleted in the modification of Section 4.3.2.4.

(d) A final NSP comment addressed its belief that licensees should be given the opportunity to demonstrate that the existing low-flow controller meets the intent of the GE recommendations. This has already been discussed under GE comment (a).

(4) Vermont Yankee Nuclear Power Corporation

Vermont Yankee suggested that continued operation with interference-fit spargers would be, in its opinion, satisfactory. The staff does not concur and retains its position that interference-fit spargers are only acceptable as an interim solution. GE and the NRC staff concluded in their independent reviews that the interference fit would loosen with time, resulting in leakage and crack initiation. In addition, the use of interference-fit spargers results in larger amounts of radiation exposure for inspection personnel because of the need for increased inspection frequency (See Table 2). For these reasons, we cannot allow the use of interference-fit spargers beyond the deadline stated in NUREG-0619.

Regarding this deadline, Vermont Yankee noted that there is a paucity of equipment available to remove clad and prepare the nozzles for the improved spargers. Another commenter noted the difficulty in preparing for modification of both the feedwater nozzles and the control rod drive hydraulic system. The NRC staff recognizes the practical difficulties and has thereby extended the deadlines by 6 months. Thus, feedwater nozzle modifications must be completed by June 30, 1983, and control rod drive nozzle (and system) modifications must be completed by June 30, 1982.

(5) Commonwealth Edison Company (CECO)

(a) CECO questioned the need for, and urgency for, installation of system changes (such as RWCU reroute and improved feedwater low-flow controller). Its basis was that usage factor increases <u>significantly</u> only with seal leakage. The NRC staff agrees that this is true but takes exception to the thrust of the CECO comment. First, the RWCU reroute provides a decrease in the probability of crack initiation, and the low-flow controller helps to mitigate crack growth. Section 3.3.2 of Appendix C to NUREG-0619 discusses these changes and the benefits to be gained from each. The staff believes these benefits to be significant, even without the presence of seal leakage. For example, on those plants with relatively low feedwater temperature, analysis has shown that the low-flow controller may be necessary to limit crack growth to less than 1 inch in 40 years.

Also, the shedding of the cold boundary layer from the inner sleeve may still be a problem, even though the magnitude of the temperature differential has been reduced.

A second point is that relatively minor secondary seal leakage may go undetected for long periods, assuming that an inservice leakage detection system is not used and that the licensee follows the inspection requirements set forth in Table 2. The addition of these systems changes as well as clad removal will help to delay crack initiation and, in the event that cracks do initiate, will reduce their rate of growth, thus minimizing inspection and repair time and radiation exposure.

(b) CECO also commented that the schedule of NUREG-0619 would be impossible to meet. The extension of the schedule has been previously treated in the response to Vermont Yankee above.

3.2 Control Rod Drive Return Line Nozzles

(1) General Electric Company (GE)

(a) GE commented that flow maintenance should not be required if rerouting of the CRDRL is accomplished to a system that connects to the reactor vessel. In fact, GE suggests that flow not be maintained. The NRC staff has reviewed this subject and has determined that flow maintenance should be the option of the licensee, with the various requirements (depending upon the decision to maintain rerouted return line flow) delineated. Section 8.1(3) on page 31 has been modified to reflect this. A similar modification was made to Section 8.1(5) on page 32.

(b) GE also requested that the NRC staff add to the list of approved "cut and cap" BWR classes those classes that had been reviewed since submittal of the technical information for the "For Comment" NUREG. This has been done and Section 8.1(4) (page 31) has been modified to include the updated list.

(c) GE provided comments concerning the use and care of filters in the CRD system's insert and exhaust lines and suggested that additional maintenance requirements for these filters will only be necessary if carbon steel piping is retained. The NRC staff agrees with this assessment and has modified Sections 8.2(3)(c) and 8.2(4) on page 33 accordingly.

(d) In a final comment, GE argued that the elimination of carbon steel piping in the flow stabilizer loop [Section 8.1(4)(c')] (page 32) should not be a "hard" requirement and that filter installation with proper maintenance should be satisfactory. The NRC staff does not agree. First, recent BWR problems with CRD movement argue in favor of maintaining water quality at its best. The staff does not feel that filters can accomplish this goal, especially when the length of piping to be replaced by stainless steel is only approximately 12 feet. Second, even with the present filters contained in the CRD hydraulic system, drive movement problems have resulted from filter

plugging in the CRD mechanisms themselves, showing that filtration and maintenance procedures have not been totally effective. Therefore we shall insist upon the use of the stainless steel stabilizer loop piping and, as noted in (c) above, will require upgraded filter maintenance procedures where carbon steel is maintained in other parts of the system.

(2) Northern States Power Company (NSP)

NSP commented that in its opinion the pressure control station, to be installed in the cooling water header [Section 8.1(5)] (page 32), is not necessary. It argued that the station had no function with regard to protecting the rerouted CRD system from pressure fluctuations in the system to which it is connected. It also argued that one function of the station (repressurization of the exhaust system following a scram) is already accomplished by an orificed check valve and that the pressure control station was, therefore, a complicated component redundant to a simple check valve.

The NRC staff does not concur with this assessment. First, in detailed discussions with GE concerning this matter, the staff was told that the pressure control station was added to accommodate normal (moderate) pressure fluctuations in the connected system piping. In addition, the consequences of a large sudden pressure increase in the connected system would be limited, in GE's words, by the operation of the flow check valves in the return line and the new cooling water header pressure control station. The station would compensate for the rising CRD system pressure resulting from closure of the check valves and would prevent drive speeds from exceeding the operational limit of 5.0 in./sec.

(3) Commonwealth Edison Company (CECO)

(a) CECO argued against rerouting of the return line, stating that additional nondestructive examinations in either case made the two almost indistinguishable. In addition, CECO noted that they had not yet been convinced that system modifications, such as the pressure-equalizing valves, are warranted.

In response, the NRC staff points out that Section 8.1(3) (page 31) specifically states that the reroute connection should be outside containment, thus accessible during operation for examination. In addition, the staff is considering whether to eliminate the reroute option altogether. Recent pipe cracking events at Edwin I. Hatch Unit 1 may show that the flow of cold CRD water into the reactor water cleanup system was a direct cause of the cracking. However, metallographic examination is not yet complete. As a final point, the interim valved out line (and possibly the rerouted valved out line) is not acceptable because of the problem of intergranular stress corrosion cracking when stagnant conditions exist, if stainless steel piping has been used.

Regarding the pressure-equalizing valves, the NRC staff has determined that they are necessary to preclude high-pressure differentials across the CRD mechanisms during postulated operational

occurrences. They also serve as a means of preventing backflow of deleterious corrosion products from the exhaust system into the CRD mechanisms.

(b) CECO suggests that the requirement for PT examination of the CRD return-line nozzle be eliminated for those plants on which inspection was accomplished when flow was originally valved out. The NRC staff cannot agree to this suggestion for two reasons. First, past experience has proven that tight fatigue cracks are sometimes missed during examinations when many cracks are present. Those not removed by grinding will then grow. Second, there is no guarantee that the isolation valves did not leak, initiating cracking anew.

(c) CECO questions the need for nondestructive examination on carbon steel piping used in rerouting the return line, when the rerouted flow is valved off and stagnant conditions exist. Since intergranular stress corrosion cracking under stagnant conditions is a phenomenon known to occur only in stainless steel piping, we accept this comment and have modified Section 8.2(3)(c) on page 33 accordingly.

(d) CECO's final comment regarded the schedule for system modifications. This has been discussed elsewhere.

4 INCOMING DOCUMENTS*

The following incoming letters comprise the comments discussed in the preceding sections. All were addressed to Richard P. Snaider, Generic Issues Branch, Division of Safety Technology. The letters are:

Date	NRC Accession Number	Company	Name & Title of Originator
June 19, 1980	8007070249	General Electric	Richard L. Gridley, Manager Fuel and Services Licensing
July 8, 1980	8007150655	Long Island Lighting Company	J. P. Novarro, Project Manager, Shoreham Nuclear Power Station
July 11, 1980	8007170398	Northern States Power Company	L. O. Mayer, Manager Nuclear Support Services
July 18, 1980	8007250488	Vermont Yankee Nuclear Power Corp.	R. L. Smith Licensing Engineer
July 23, 1980	8007280567	Commonwealth Edison Company	Robert F. Janacek, Nuclear Licensing Administrator, Boiling Water Reactors

*Copies of the five letters are available in NRC PDR. The Public Document Room is located at 1717 H Street, N.W., Washington, D.C. 20555.

*U.S. GOVERNMENT PRINTING OFFICE: 1980-0-141-742/544