RIC 2003

Region II Breakout – Session F1

North Anna Unit 2
Reactor Vessel Head Replacement

David A. Heacock

Site Vice President

April 18, 2003

Agenda

- Unit 2 CRDM Issue
- Design and Licensing
- Challenges
- Lessons Learned
- Regulatory Interface

Typical Penetration

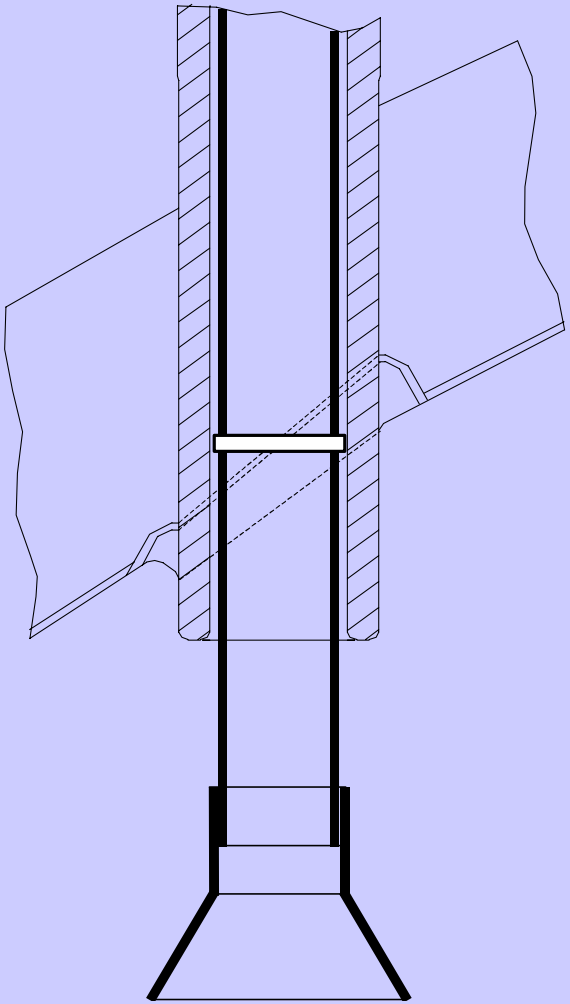

North Anna Pent 53 Indications

Design and Licensing

- Reconcile code of record - RCC-M to Owner's Requirements
  - NAPS-2 not a Code Stamped Vessel
  - Friction weld on CRDM penetration tubes
  - Acceptability of French QA program
  - Assemble reconciliation package
  - Assemble code data package
  - Perform stress analyses

Design and Licensing

- Develop design engineering packages
  - Engr. Transmittal to allow Head Set
  - DCP for new RV Head
  - DCP for modified Service Structure
  - 3 DCPs in phases for Access Opening
- Obtain concurrence from NRC:
  - 50.59 approach for replacement head
  - Containment testing approach
  - NRC Final Review of documentation packages

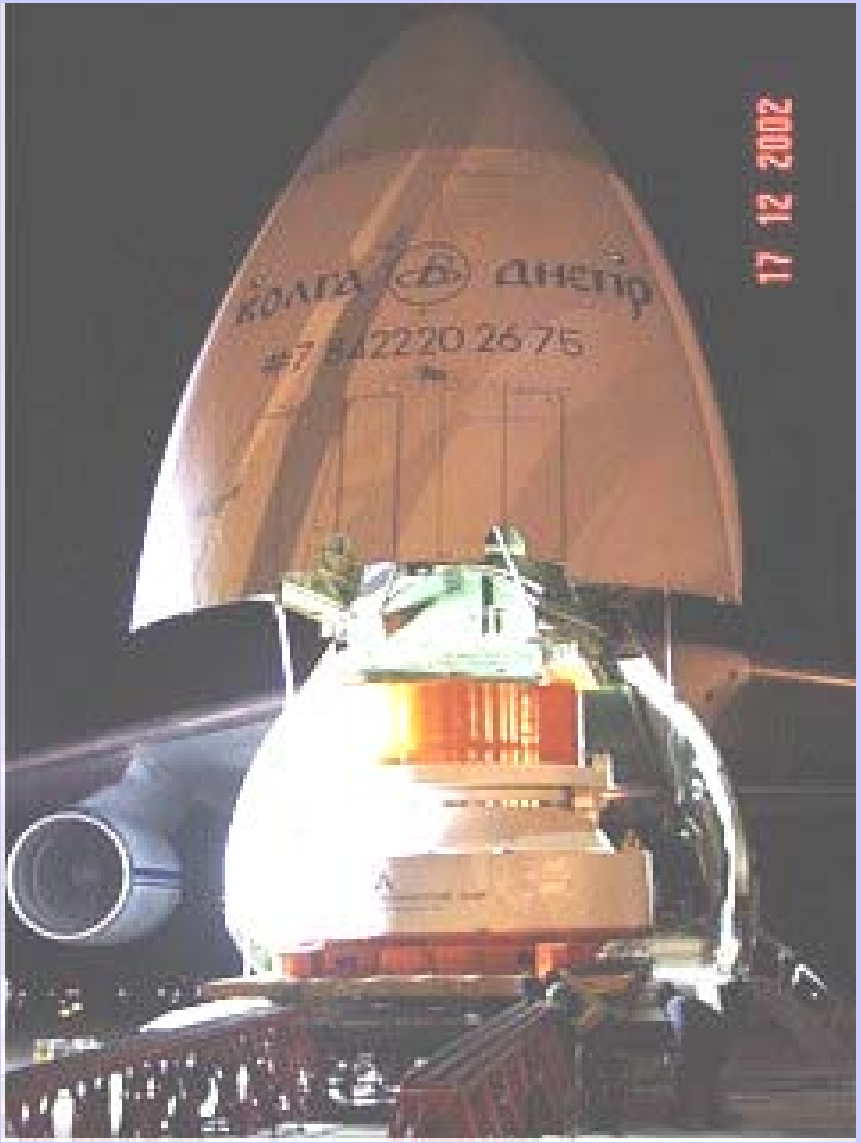

READY FOR LIFT TO TRANSPORTER

TRANSPORTER ARRIVAL AT NAPS

CUTTING EQUIPMENT IN OPERATION

EXPOSED REBAR

FIRST CUT COMPLETE - WAITING FOR REBAR REMOVAL

15 10 2002

LATCH HOUSING MECHANICAL CUTTING AND CRDM REMOVAL

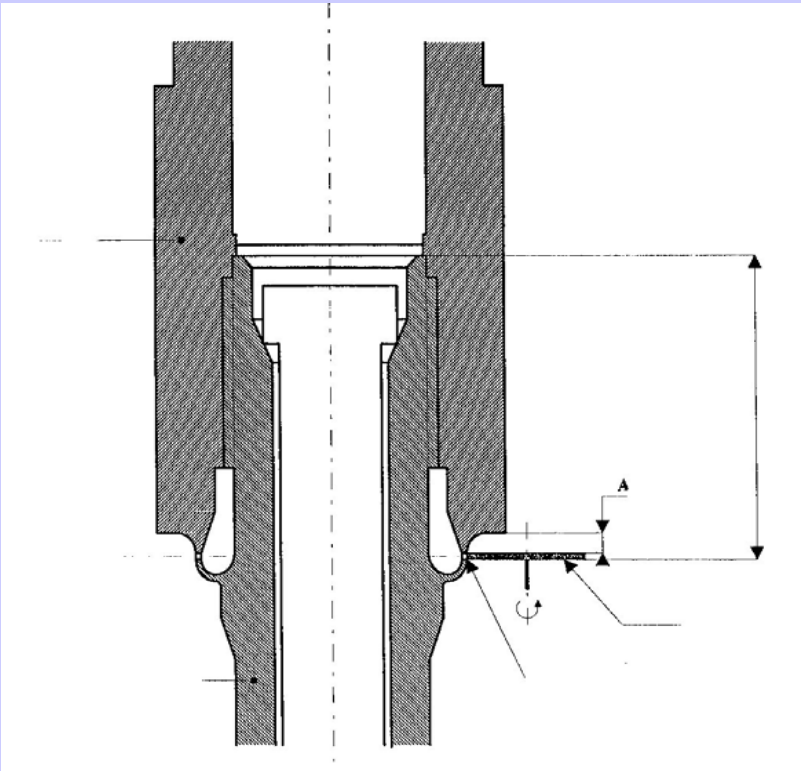

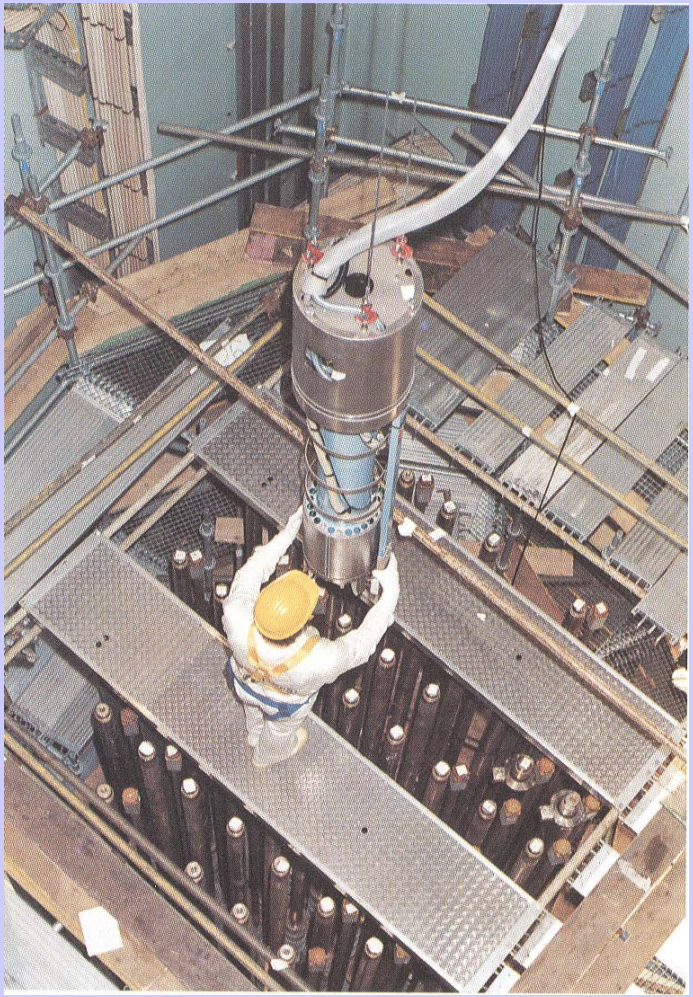

- **Key points:**
  - **Preserve latch housing integrity**
  - **Prevent damage to latch housing thread**

MACHINING & LIQUID PENETRANT TEST

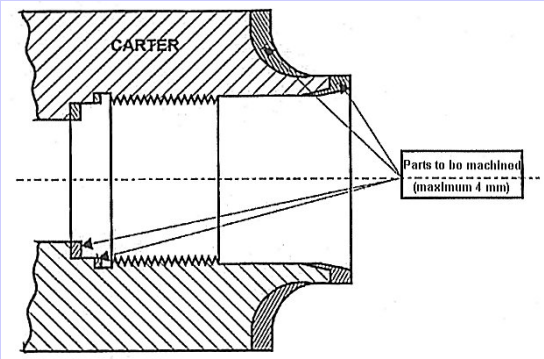

- Key points to insure weld quality:
  - to remachine the weld edge
  - to meet the base metal

LATCH HOUSING WELD INSERT TACK WELDING

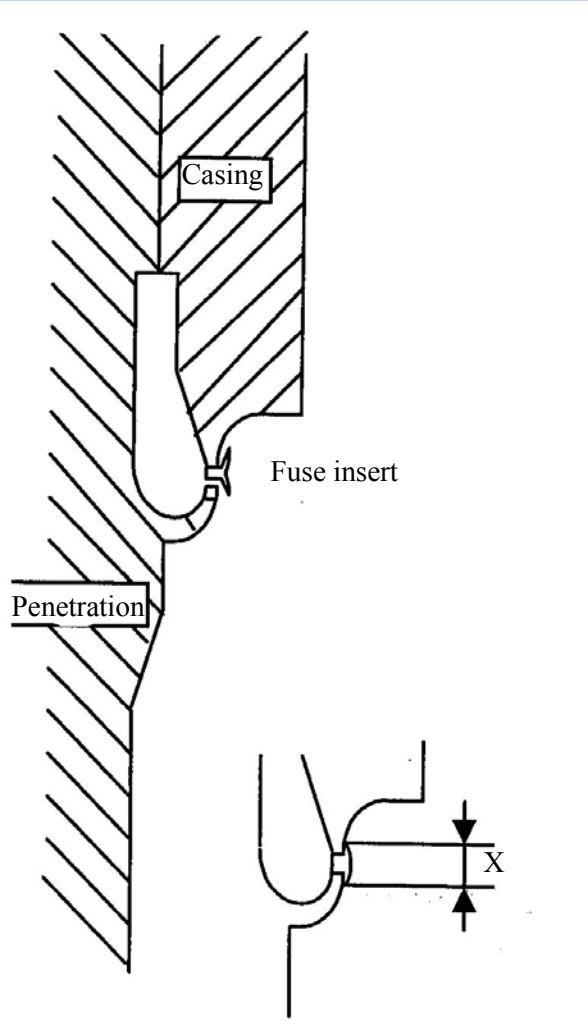

OLD HEAD ON PLATFORM
READY FOR LIFT

NEW HEAD ON PLATFORM

TOP HAT BEING REMOVED

NEW HEAD READY FOR MOVE INTO CONTAINMENT

ReBar Being Reinstalled

Building Concrete Forms

ReBar Installation Complete

Concrete Forms Complete

New Head Assembly

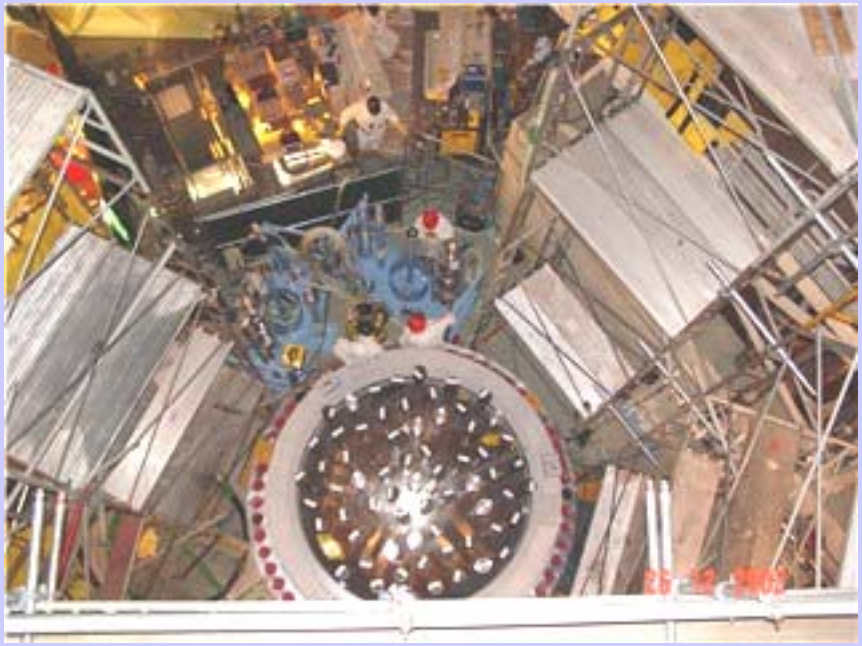

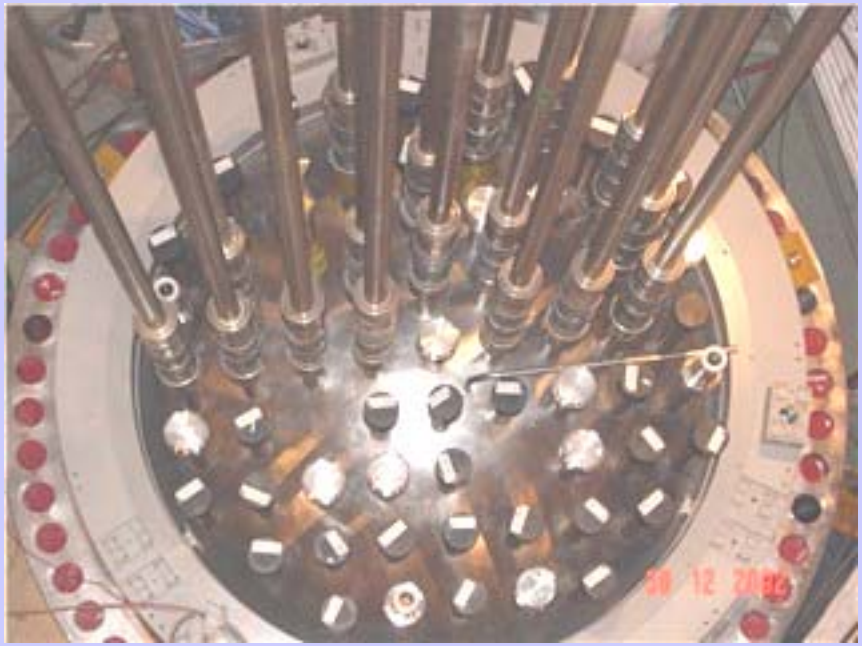

Moving New Head to Cavity

Transportation

- 30 days required for submitting transportation plan in France and U.S.
- U.S. Customs pre-staged for clearance
- Russian heavy-lift aircraft retained to move head from Lyon to Richmond
- Specialized trucks used to move head in France and the U.S.

50.59 Determination

- NAPS-2 is not a Code Stamped Vessel
- It was designed and licensed to “Owner’s Requirements”
- Replacement head has been evaluated to conform to Owner’s Requirements, hence --
- The project was performed under 50.59
- No formal NRC approval was required

50.59 Determination

- Approach discussed with NRR in early October in a series of telecons
- Public Meeting held at Dominion on October 29, 2002
- NRC concurred with approach, but ---
- NRC formally requested an opportunity to review the documentation packages
- NRC also visited French regulator and mfgr

50.59 Determination

- NRC advised that the main challenges would be related to:
  - QA Program reconciliation
  - Use of friction welding specifically excluded by ASME Section III
  - Reconciliation of RCC-M Code to Owner's requirements

QA Program

- QA Audit team dispatched to France from 10-21 to 10-31
- Mapping from French QA program to 10CFR50 App. B program was direct
- French program derived from US program
- QA audit report concluded that French QA program was satisfactory (met App. B)

Friction Weld

- Penetration tube to CRDM adapter weld used friction welding process
- Basically, hold one piece still; spin the other very fast; push them together and they fuse
- Used successfully in over 40 French vessel heads; significant history with no events
- French code and process requirements very well refined

Friction Weld

- Basis of reconciliation was effectiveness of French program
- US Codes not well-defined as a basis of comparison (Sect III N/A; Sect IX weak)
- Backed up reconciliation with extensive pre-service examinations (UT and LP)

Code Reconciliation

- Identified all applicable ASME manufacturing and pre-service requirements that define "Owner's Requirements"
  - Applicable portions of ASME III ('68) and special provisions of design specification
- Mapped all documentation into those requirements and identified deltas
  - Used ASME 95 with 96 addenda as basis
  - Performed a reconciliation to ASME III ('68)

Code Reconciliation

- Reconciliation basis was then developed for each delta
- NOTE: French code was developed from ASME.
- There was a high degree of correlation between the codes
- The factory does both RCC-M and ASME work so parallel quals existed for workers

Stress Analyses

- Westinghouse provided inputs for dead load, seismic and LOCA loads
- Westinghouse provided design inputs on physical interface equipment
- Framatome developed stress analyses
  - Vessel Head
  - Lifting Ring

Stress Analyses

- French approach relies on acceptability of the computer code and focuses on outputs
- U.S. approach expects documentation of methodology to create a stand-alone report

Disposal

- Envirocare contracted to take possession of old RV head
- WMG provided truck transportation across the U.S. to Utah
- Costs to store on site or dispose were fairly close
- Need to consider capital vs. O&M

Lessons Learned

- Do not attempt to do this job this way !!!
- Take firm control of your documentation packages; special attention to resources and planning of engineering efforts is necessary.
- Use of experienced company personnel is a must
- Use of experienced prime contractors is a must

Lessons Learned

- Define the lines of communication among the project team members and to the Station
- Strong and flexible project planning - coordinate the prime contractors and outage planning
- Establish a presence in the prime contractor's offices including the mfgr.
- Clear communications with the regulator

Regulatory Interface

- Constant and effective communications from NRC
- Efficient NRC Task Team documentation reconciliation reviews
- Prompt turn-around on exemption requests
- On-site NRC inspection activities well coordinated
- Excellent cooperation by the NRC

Comments or Questions?