Attachment 4

Proposed Tech Spec Change Retyped

Section 1.1, Definitions

Section 3.3.6 (To be provided after approval of pending amendment)

Section 3.4.16, RCS Specific Activity

Section 3.6.6, Containment Spray (CS), Containment Recirculation Fan Cooler (CRFC), NaOH, and Containment Post Accident Charcoal Systems

Section 3.7.9, Control Room Emergency Air Treatment System (CREATS)

Section 5.5.10, Ventilation Filter Testing Program (VFTP)

Section 5.5.16, Control Room Integrity Program

Section 5.6.7, Control Room Emergency Filtration System Report

1.0 USE AND APPLICATION

1.1 Definitions

- NOTE -

The defined terms of this section appear in capitalized type and are applicable throughout these Technical Specifications and Bases.

Term	Definition
ACTIONS	ACTIONS shall be that part of a Specification that prescribes Required Actions to be taken under designated Conditions within specified Completion Times.
ACTUATION LOGIC TEST	An ACTUATION LOGIC TEST shall be the application of various simulated or actual input combinations in conjunction with each possible interlock logic state and the verification of the required logic output. The ACTUATION LOGIC TEST, as a minimum, shall include a continuity check of output devices.
AXIAL FLUX DIFFERENCE (AFD)	AFD shall be the difference in normalized flux signals between the top and bottom halves of a two section excore neutron detector.
CHANNEL CALIBRATION	A CHANNEL CALIBRATION shall be the adjustment, as necessary, of the channel so that it responds within the required range and accuracy to known input. The CHANNEL CALIBRATION shall encompass the entire channel, including the required sensor, alarm, interlock, display, and trip functions. Calibration of instrument channels with resistance temperature detector (RTD) or thermocouple sensors may consist of an inplace qualitative assessment of sensor behavior and normal calibration of the remaining adjustable devices in the channel. The CHANNEL CALIBRATION may be performed by means of any series of sequential, overlapping calibrations or total channel steps so that the entire channel is calibrated.
CHANNEL CHECK	A CHANNEL CHECK shall be the qualitative assessment, by observation, of channel behavior during operation. This determination shall include, where possible, comparison of the channel indication and status to other indications or status derived from independent instrument channels measuring the same parameter.

CHANNEL OPERATIONAL TEST (COT)	A COT shall be the injection of a simulated or actual signal into the channel as close to the sensor as practicable to verify the OPERABILITY of required alarm, interlock, display, and trip functions. The COT shall include adjustments, as necessary, of the required alarm, interlock, and trip setpoints so that the setpoints are within the required range and accuracy.
CORE ALTERATIONS	CORE ALTERATIONS shall be the movement of any fuel, sources, or reactivity control components, within the reactor vessel with the vessel head removed and fuel in the vessel. Suspension of CORE ALTERATIONS shall not preclude completion of movement of a component to a safe position.
CORE OPERATING LIMITS REPORT (COLR)	The COLR is the plant specific document that provides cycle specific parameter limits for the current reload cycle. These cycle specific parameter limits shall be determined for each reload cycle in accordance with Specification 5.6.5. Plant operation within these limits is addressed in individual Specifications.
DOSE EQUIVALENT I-131	DOSE EQUIVALENT I-131 shall be that concentration of I-131 (microcuries/gram) that alone would produce the same thyroid dose as the quantity and isotopic mixture of I-131, I-132, I-133, I-134, and I-135 actually present. The thyroid dose conversion factors used for this calculation shall be those listed in ICRP 30, Supplement to Part 1, pages 192-212, table entitled, "Committed Dose Equivalent in Target Organs or Tissues per Intake of Unit Activity."
$\bar{E}$ - AVERAGE DISINTEGRATION ENERGY	$\bar{E}$ shall be the average (weighted in proportion to the concentration of each radionuclide in the reactor coolant at the time of sampling) of the sum of the average beta and gamma energies (in MeV) per disintegration for non-iodine isotopes, with half lives > 15 minutes, making up at least 95% of the total non-iodine activity in the coolant.

LEAKAGE

LEAKAGE from the RCS shall be:

a. Identified LEAKAGE

1. LEAKAGE, such as that from pump seals or valve packing (except reactor coolant pump (RCP) seal water injection or return), that is captured and conducted to collection systems or a sump or collecting tank;

2. LEAKAGE into the containment atmosphere from sources that are both specifically located and known either not to interfere with the operation of leakage detection systems or not to be pressure boundary LEAKAGE; or

3. Reactor Coolant System (RCS) LEAKAGE through a steam generator (SG) to the Secondary System;

b. Unidentified LEAKAGE

All LEAKAGE (except RCP seal water injection or return) that is not identified LEAKAGE;

c. Pressure Boundary LEAKAGE

LEAKAGE (except SG LEAKAGE) through a nonisolable fault in an RCS component body, pipe wall, or vessel wall.

MODE
- MODES

A MODE shall correspond to any one inclusive combination of core reactivity condition, power level, average reactor coolant temperature, and reactor vessel head closure bolt tensioning specified in Table 1.1-1 with fuel in the reactor vessel.

OPERABLE
- OPERABILITY

A system, subsystem, train, component, or device shall be OPERABLE or have OPERABILITY when it is capable of performing its specified safety function(s) and when all necessary attendant instrumentation, controls, normal or emergency electrical power, cooling and seal water, lubrication, and other auxiliary equipment that are required for the system, subsystem, train, component, or device to perform its specified safety function(s) are also capable of performing their related support function(s).

PHYSICS TESTS	PHYSICS TESTS shall be those tests performed to measure the fundamental nuclear characteristics of the reactor core and related instrumentation. These tests are: a. Described in Chapter 14, Initial Test Program of the UFSAR; b. Authorized under the provisions of 10 CFR 50.59; or c. Otherwise approved by the Nuclear Regulatory Commission (NRC).
PRESSURE AND TEMPERATURE LIMITS REPORT (PTLR)	The PTLR is the plant specific document that provides the reactor vessel pressure and temperature limits, including heatup and cooldown rates, and the power operated relief valve lift settings and enable temperature associated with the Low Temperature Overpressurization Protection System for the current reactor vessel fluence period. These pressure and temperature limits shall be determined for each fluence period in accordance with Specification 5.6.6. Plant operation within these limits is addressed in individual specifications.
QUADRANT POWER TILT RATIO (QPTR)	QPTR shall be the ratio of the highest average nuclear power in any quadrant to the average nuclear power in the four quadrants.
RATED THERMAL POWER (RTP)	RTP shall be a total reactor core heat transfer rate to the reactor coolant of 1520 MWt.
SHUTDOWN MARGIN (SDM)	SDM shall be the instantaneous amount of reactivity by which the reactor is subcritical or would be subcritical from its present condition assuming: a. All rod cluster control assemblies (RCCAs) are fully inserted except for the single RCCA of highest reactivity worth, which is assumed to be fully withdrawn. With any RCCAs not capable of being fully inserted, the reactivity worth of the RCCAs must be accounted for in the determination of SDM; and b. In MODES 1 and 2, the fuel and moderator temperatures are changed to the nominal hot zero power temperature.
STAGGERED TEST BASIS	A STAGGERED TEST BASIS shall consist of the testing of one of the systems, subsystems, channels, or other designated components during the interval specified by the Surveillance Frequency, so that all systems, subsystems, channels, or other designated components are tested during *n* Surveillance Frequency intervals, where *n* is the total number of systems, subsystems, channels, or other designated components in the associated function.

THERMAL POWER	THERMAL POWER shall be the total reactor core heat transfer rate to the reactor coolant.
TRIP ACTUATING DEVICE OPERATIONAL TEST (TADOT)	A TADOT shall consist of operating the trip actuating device and verifying the OPERABILITY of required alarm, interlock, display, and trip functions. The TADOT shall include adjustment, as necessary, of the trip actuating device so that it actuates at the required setpoint within the required accuracy.

Table 1.1-1
MODES

MODE	TITLE	REACTIVITY CONDITION (k_{eff})	% RATED THERMAL POWER[a]	AVERAGE REACTOR COOLANT TEMPERATURE (°F)
1	Power Operation	≥ 0.99	> 5	NA
2	Startup	≥ 0.99	≤ 5	NA
3	Hot Shutdown	< 0.99	NA	≥ 350
4	Hot Standby[b]	< 0.99	NA	$350 > T_{avg} > 200$
5	Cold Shutdown[b]	< 0.99	NA	≤ 200
6	Refueling[c]	NA	NA	NA

(a) Excluding decay heat.

(b) All reactor vessel head closure bolts fully tensioned.

(c) One or more reactor vessel head closure bolts less than fully tensioned.

3.4 REACTOR COOLANT SYSTEM (RCS)

3.4.16 RCS Specific Activity

LCO 3.4.16 The specific activity of the reactor coolant shall be within limits.

APPLICABILITY: MODES 1 and 2,
MODE 3 with RCS average temperature (T_{avg}) ≥ 500°F.

ACTIONS

CONDITION	REQUIRED ACTION	COMPLETION TIME
A. DOSE EQUIVALENT I-131 specific activity not within limit.	- NOTE - LCO 3.0.4 is not applicable.	
	A.1 Verify DOSE EQUIVALENT I-131 ≤ 60 µCi/gm.	Once per 8 hours
	AND	
	A.2 Restore DOSE EQUIVALENT I-131 to within limit.	7 days
B. Required Action and associated Completion Time of Condition A not met. OR DOSE EQUIVALENT I-131 specific activity > 60 µCi/gm.	B.1 Be in MODE 3 with T_{avg} < 500°F.	8 hours
C. Gross specific activity not within limit.	C.1 Be in MODE 3 with T_{avg} < 500°F.	8 hours

SURVEILLANCE REQUIREMENTS

SURVEILLANCE		FREQUENCY
SR 3.4.16.1	Verify reactor coolant gross specific activity ≤ 100/$\overline{E}$ µCi/gm.	7 days
SR 3.4.16.2	- NOTE - Only required to be performed in MODE 1. Verify reactor coolant DOSE EQUIVALENT I-131 specific activity ≤ 1.0 µCi/gm.	14 days AND Between 2 and 10 hours after a THERMAL POWER change of ≥ 15% RTP within a 1 hour period
SR 3.4.16.3	- NOTE - Only required to be performed in MODE 1. Determine $\overline{E}$ from a reactor coolant sample.	Once within 31 days after a minimum of 2 effective full power days and 20 days of MODE 1 operation have elapsed since the reactor was last subcritical for ≥ 48 hours. AND Every 184 days thereafter

3.6 CONTAINMENT SYSTEMS

3.6.6 Containment Spray (CS), Containment Recirculation Fan Cooler (CRFC), and NaOH Systems

LCO 3.6.6 Two CS trains, four CRFC units, and the NaOH system shall be OPERABLE.

- NOTE -

In MODE 4, both CS pumps may be in pull-stop for up to 2 hours for the performance of interlock and valve testing of motor operated valves (MOVs) 857A, 857B, and 857C. Power may also be restored to MOVs 896A and 896B, and the valves placed in the closed position, for up to 2 hours for the purpose of each test.

APPLICABILITY: MODES 1, 2, 3, and 4.

ACTIONS

CONDITION		REQUIRED ACTION		COMPLETION TIME
A.	One CS train inoperable.	A.1	Restore CS train to OPERABLE status.	72 hours
B.	NaOH system inoperable.	B.1	Restore NaOH System to OPERABLE status.	72 hours
C.	Required Action and associated Completion Time of Condition A or B not met.	C.1	Be in MODE 3.	6 hours
		AND		
		C.2	Be in MODE 5.	84 hours
D.	One or two CRFC units inoperable.	D.1	Restore CRFC unit(s) to OPERABLE status.	7 days
E.	Required Action and associated Completion Time of Condition D not met.	E.1	Be in MODE 3.	6 hours
		AND		
		E.2	Be in MODE 5.	36 hours

CONDITION	REQUIRED ACTION	COMPLETION TIME
F. Two CS trains inoperable. OR Three or more CRFC units inoperable.	F.1 Enter LCO 3.0.3.	Immediately

SURVEILLANCE REQUIREMENTS

SURVEILLANCE		FREQUENCY
SR 3.6.6.1	Perform SR 3.5.2.1 and SR 3.5.2.3 for valves 896A and 896B.	In accordance with applicable SRs.
SR 3.6.6.2	Verify each CS manual, power operated, and automatic valve in the flow path that is not locked, sealed, or otherwise secured in position is in the correct position.	31 days
SR 3.6.6.3	Verify each NaOH System manual, power operated, and automatic valve in the flow path that is not locked, sealed, or otherwise secured in position is in the correct position.	31 days
SR 3.6.6.4	Operate each CRFC unit for ≥ 15 minutes.	31 days
SR 3.6.6.5	Verify cooling water flow through each CRFC unit.	31 days
SR 3.6.6.6	Verify each CS pump's developed head at the flow test point is greater than or equal to the required developed head.	In accordance with the Inservice Testing Program
SR 3.6.6.7	Verify NaOH System solution volume is ≥ 3000 gal.	184 days
SR 3.6.6.8	Verify NaOH System tank NaOH solution concentration is ≥ 30% and ≤ 35% by weight.	184 days
SR 3.6.6.9	Perform required CRFC unit testing in accordance with the VFTP.	In accordance with the VFTP
SR 3.6.6.10	Verify each automatic CS valve in the flow path that is not locked, sealed, or otherwise secured in position actuates to the correct position on an actual or simulated actuation signal.	24 months

SURVEILLANCE		FREQUENCY
SR 3.6.6.11	Verify each CS pump starts automatically on an actual or simulated actuation signal.	24 months
SR 3.6.6.12	Verify each CRFC unit starts automatically on an actual or simulated actuation signal.	24 months
SR 3.6.6.13	Verify each automatic NaOH System valve in the flow path that is not locked, sealed, or otherwise secured in position actuates to the correct position on an actual or simulated actuation signal.	24 months
SR 3.6.6.14	Verify spray additive flow through each eductor path.	5 years
SR 3.6.6.15	Verify each spray nozzle is unobstructed.	10 years

3.7 PLANT SYSTEMS

3.7.9 Control Room Emergency Air Treatment System (CREATS)

LCO 3.7.9 Two CREATS trains and the control room boundary shall be OPERABLE.

- NOTE -

The control room boundary may be opened intermittently under administrative control.

APPLICABILITY: MODES 1, 2, 3, and 4,
During movement of irradiated fuel assemblies.

ACTIONS

CONDITION		REQUIRED ACTION		COMPLETION TIME
A.	One CREATS train inoperable.	A.1	Restore CREATS train to OPERABLE status.	7 days
B.	Control room boundary inoperable.	B.1	Initiate compensatory measures.	Immediately
		AND		
		B.2	Restore control room boundary to OPERABLE status.	14 days
C.	Required Action and associated Completion Time of Condition B not met.	C.1	Initiate action in accordance with Specification 5.6.7.	Immediately
D.	Required Action and associated Completion Time of Condition A not met in MODE 1, 2, 3, or 4.	D.1	Be in MODE 3.	6 hours
		AND		
		D.2	Be in MODE 5.	36 hours

CONDITION		REQUIRED ACTION		COMPLETION TIME
E.	Required Action and associated Completion Time of Condition A not met during movement of irradiated fuel assemblies.	E.1	Place OPERABLE CREATS train in emergency mode.	Immediately
		OR		
		E.2	Suspend movement of irradiated fuel assemblies.	Immediately
F.	Two CREATS trains inoperable during movement of irradiated fuel assemblies.	F.1	Suspend movement of irradiated fuel assemblies.	Immediately
G.	Two CREATS trains inoperable in MODE 1, 2, 3, or 4.	G.1	Enter LCO 3.0.3.	Immediately

SURVEILLANCE REQUIREMENTS

SURVEILLANCE		FREQUENCY
SR 3.7.9.1	Operate each CREATS train for ≥ 15 minutes.	31 days
SR 3.7.9.2	Perform required CREATS filter testing in accordance with the Ventilation Filter Testing Program (VFTP).	In accordance with the VFTP
SR 3.7.9.3	Verify each CREATS train actuates on an actual or simulated actuation signal.	24 months
SR 3.7.9.4	Verify control room habitability requirements are met in accordance with the Control Room Integrity Program (CRIP).	In accordance with the CRIP

5.0 ADMINISTRATIVE CONTROLS

5.5 Programs and Manuals

The following programs and manuals shall be established, implemented, and maintained.

5.5.1 Offsite Dose Calculation Manual (ODCM)

The ODCM shall contain:

a. The methodology and parameters used in the calculation of offsite doses resulting from radioactive gaseous and liquid effluents, in the calculation of gaseous and liquid effluent monitoring alarm and trip setpoints, and in the conduct of the radiological environmental monitoring program; and

b. The radioactive effluent controls and radiological environmental monitoring activities and descriptions of the information that should be included in the Annual Radiological Environmental Operating and Radioactive Effluent Release Reports.

Licensee initiated changes to the ODCM:

a. Shall be documented and records of reviews performed shall be retained. This documentation shall contain:

   1. sufficient information to support the change(s) together with the appropriate analyses or evaluations justifying the change(s),

   2. a determination that the change(s) maintain the levels of radioactive effluent control required by 10 CFR 20.1302, 40 CFR 190, 10 CFR 50.36a, and 10 CFR 50, Appendix I, and does not adversely impact the accuracy or reliability of effluent, dose, or setpoint calculations;

b. Shall become effective after review and acceptance by the onsite review function and the approval of the plant manager; and

c. Shall be submitted to the NRC in the form of a complete, legible copy of the entire ODCM as a part of or concurrent with the Radioactive Effluent Release Report for the period of the report in which any change in the ODCM was made. Each change shall be identified by markings in the margin of the affected pages, clearly indicating the area of the page that was changed, and shall indicate the date (i.e., month and year) the change was implemented.

5.5.2 Primary Coolant Sources Outside Containment Program

This program provides controls to minimize leakage from those portions of systems outside containment that could contain highly radioactive fluids during a serious transient or accident. The systems include Containment Spray, Safety Injection, and Residual Heat Removal in the recirculation configuration. The program shall include the following:

a. Preventive maintenance and periodic visual inspection requirements; and

b. Integrated leak test requirements for each system at refueling cycle intervals or less.

5.5.3 Deleted

5.5.4 Radioactive Effluent Controls Program

This program conforms to 10 CFR 50.36a for the control of radioactive effluents and for maintaining the doses to members of the public from radioactive effluents as low as reasonably achievable. The program shall be contained in the ODCM, shall be implemented by procedures, and shall include remedial actions to be taken whenever the program limits are exceeded. The program shall include the following elements:

a. Limitations on the functional capability of radioactive liquid and gaseous monitoring instrumentation including surveillance tests and setpoint determination in accordance with the methodology in the ODCM;

b. Limitations on the concentrations of radioactive material released in liquid effluents to unrestricted areas, conforming to ten times the concentration values in 10 CFR 20, Appendix B, Table 2, Column 2;

c. Monitoring, sampling, and analysis of radioactive liquid and gaseous effluents in accordance with 10 CFR 20.1302 and with the methodology and parameters in the ODCM;

d. Limitations on the annual and quarterly doses or dose commitment to a member of the public from radioactive materials in liquid effluents released from the plant to unrestricted areas, conforming to 10 CFR 50, Appendix I and 40 CFR 141;

e. Determination of cumulative and projected dose contributions from radioactive effluents for the current calendar quarter and current calendar year in accordance with the methodology and parameters in the ODCM at least every 31 days;

f. Limitations on the functional capability and use of the liquid and gaseous effluent treatment systems to ensure that appropriate portions of these systems are used to reduce releases of radioactivity when the projected doses in a period of 31 days would exceed 2% of the guidelines for the annual dose or dose commitment, conforming to 10 CFR 50, Appendix I;

g. Limitations on the dose rate resulting from radioactive material released in gaseous effluents to areas beyond the site boundary conforming to the dose associated with 10 CFR 20, Appendix B, Table 2, Column 1;

h. Limitations on the annual and quarterly air doses resulting from noble gases released in gaseous effluents from the plant to areas beyond the site boundary, conforming to 10 CFR 50, Appendix I;

i. Limitations on the annual and quarterly doses to a member of the public from iodine-131, iodine-133, tritium, and all radionuclides in particulate form with half lives > 8 days in gaseous effluents released from the plant to areas beyond the site boundary, conforming to 10 CFR 50, Appendix I; and

j. Limitations on the annual dose or dose commitment to any member of the public due to releases of radioactivity and to radiation from uranium fuel cycle sources, conforming to 40 CFR 190.

5.5.5 Component Cyclic or Transient Limit Program

This program provides controls to track the reactor coolant system cyclic and transient occurrences specified in UFSAR Table 5.1-4 to ensure that components are maintained within the design limits.

5.5.6 Pre-Stressed Concrete Containment Tendon Surveillance Program

This program provides controls for monitoring any tendon degradation in pre-stressed concrete containments, including effectiveness of its corrosion protection medium, to ensure containment structural integrity. The Tendon Surveillance Program, inspection frequencies, and acceptance criteria shall be in accordance with Regulatory Guide 1.35, Revision 2.

The provisions of SR 3.0.2 and SR 3.0.3 are applicable to the Tendon Surveillance Program inspection frequencies.

5.5.7 Inservice Testing Program

This program provides controls for inservice testing of ASME Code Class 1, 2, and 3 components including applicable supports. The program shall include the following:

a. Testing frequencies specified in Section XI of the ASME Boiler and Pressure Vessel Code and applicable Addenda as follows:

ASME Boiler and Pressure Vessel Code and applicable Addenda terminology for inservice testing activities	Required Frequencies for performing inservice testing activities
Weekly	At least once per 7 days
Monthly	At least once per 31 days
Quarterly or every 3 months	At least once per 92 days
Semiannually or every 6 months	At least once per 184 days
Every 9 months	At least once per 276 days
Yearly or annually	At least once per 366 days
Biennially or every 2 years	At least once per 731 days

b. The provisions of SR 3.0.2 are applicable to the above required Frequencies for performing inservice testing activities;

c. The provisions of SR 3.0.3 are applicable to inservice testing activities; and

d. Nothing in the ASME Boiler and Pressure Vessel Code shall be construed to supersede the requirements of any Technical Specification.

5.5.8 Steam Generator (SG) Tube Surveillance Program

Each SG shall be demonstrated OPERABLE by performance of an inservice inspection program in accordance with the Nuclear Policy Manual. This inspection program shall define the specific requirements of the edition and Addenda of the ASME Boiler and Pressure Code, Section XI, as required by 10 CFR 50.55a(g). The program shall include the following:

a. The inspection intervals for SG tubes shall be specified in the Inservice Inspection Program.

b. SG tubes that have imperfections > 40% through wall, as indicated by eddy current, shall be repaired by plugging or sleeving.

c. SG sleeves that have imperfections > 30% through wall, as indicated by eddy current, shall be repaired by plugging.

5.5.9 Secondary Water Chemistry Program

This program provides controls for monitoring secondary water chemistry to inhibit SG tube degradation. This program shall include:

a. Identification of a sampling schedule for the critical variables and control points for these variables;

b. Identification of the procedures used to measure the values of the critical variables;

c. Identification of process sampling points;

d. Procedures for the recording and management of data;

e. Procedures defining corrective actions for all off control point chemistry conditions; and

f. A procedure identifying the authority responsible for the interpretation of the data and the sequence and timing of administrative events, which is required to initiate corrective action.

5.5.10 Ventilation Filter Testing Program (VFTP)

A program shall be established to implement the following required testing of Engineered Safety Feature filter ventilation systems and the Spent Fuel Pool (SFP) Charcoal Adsorber System. The test frequencies will be in accordance with Regulatory Guide 1.52, Revision 2, except that in lieu of 18 month test intervals, a 24 month interval will be implemented. The test methods will be in accordance with Regulatory Guide 1.52, Revision 2, except as modified below.

a. Containment Recirculation Fan Cooler System

1. Demonstrate the pressure drop across the high efficiency particulate air (HEPA) filter bank is < 3 inches of water at a design flow rate (± 10%).

2. Demonstrate that an in-place dioctylphthalate (DOP) test of the HEPA filter bank shows a penetration and system bypass < 1.0%.

b. Control Room Emergency Air Treatment System (CREATS)

1. Demonstrate the pressure drop across the combined HEPA filters, the pre-filters, the charcoal adsorbers, and the post-filters is < 14 inches of water at a design flow rate (± 10%).

2. Demonstrate that an in-place DOP test of the HEPA filter bank shows a penetration and system bypass < 1.0%.

3. Demonstrate that an in-place Freon test of the charcoal adsorber bank shows a penetration and system bypass < 1.0%, when tested under ambient conditions.

4. Demonstrate that a laboratory test of a sample of the charcoal adsorber, when obtained as described in Regulatory Guide 1.52, Revision 2, shows a methyl iodide penetration of less than 14.5% when tested in accordance with ASTM D3803-1989 at a test temperature of 30°C (86°F) and a relative humidity of 95%.

c. SFP Charcoal Adsorber System

1. Demonstrate that the total air flow rate from the charcoal adsorbers shows at least 75% of that measured with a complete set of new adsorbers.

2. Demonstrate that an in-place Freon test of the charcoal adsorbers bank shows a penetration and system bypass < 1.0%, when tested under ambient conditions.

3. Demonstrate that a laboratory test of a sample of the charcoal adsorber, when obtained as described in Regulatory Guide 1.52, Revision 2, shows a methyl iodide penetration of less than 14.5% when tested in accordance with ASTM D3803-1989 at a test temperature of 30°C (86°F) and a relative humidity of 95%.

The provisions of SR 3.0.2 and SR 3.0.3 are applicable to the VFTP frequencies.

5.5.11 Explosive Gas and Storage Tank Radioactivity Monitoring Program

This program provides controls for potentially explosive gas mixtures contained in the waste gas decay tanks and the quantity of radioactivity contained in waste gas decay tanks. The gaseous radioactivity quantities shall be determined following the methodology in NUREG-0133.

The program shall include:

a. The limits for concentrations of hydrogen and oxygen in the waste gas decay tanks and a surveillance program to ensure the limits are maintained. Such limits shall be appropriate to the system's design criteria (i.e., whether or not the system is designed to withstand a hydrogen explosion); and

b. A surveillance program to ensure that the quantity of radioactivity contained in each waste gas decay tank is less than the amount that would result in a whole body exposure of ≥ 0.5 rem to any individual in an unrestricted area, in the event of an uncontrolled release of the tanks' contents.

The provisions of SR 3.0.2 and SR 3.0.3 are applicable to the Explosive Gas and Storage Tank Radioactivity Monitoring Program surveillance frequencies.

5.5.12 Diesel Fuel Oil Testing Program

A diesel fuel oil testing program to implement required testing of both new fuel oil and stored fuel oil shall be established. The program shall include sampling and testing requirements, and acceptance criteria, all in accordance with applicable ASTM Standards. The purpose of the program is to establish the following:

a. Acceptability of new fuel oil for use prior to addition to storage tanks by determining that the fuel oil has:

   1. an API gravity or an absolute specific gravity within limits,

   2. a flash point and kinematic viscosity within limits for ASTM 2D fuel oil, and

   3. a clear and bright appearance with proper color; and

b. Within 31 days following addition of the new fuel to the storage tanks, verify that the properties of the new fuel oil, other than those addressed in a. above, are within limits for ASTM 2D fuel oil.

5.5.13 Technical Specifications (TS) Bases Control Program

This program provides a means for processing changes to the Bases of these Technical Specifications.

a. Changes to the Bases of the TS shall be made under appropriate administrative controls and reviews.

b. Licensees may make changes to Bases without prior NRC approval provided the changes do not require either of the following:

1. A change in the TS incorporated in the license; or

2. A change to the UFSAR or Bases that requires NRC approval pursuant to 10 CFR 50.59.

c. The Bases Control Program shall contain provisions to ensure that the Bases are maintained consistent with the UFSAR.

d. Proposed changes that meet the criteria of Specification 5.5.13.b.1 or Specification 5.5.13.b.2 shall be reviewed and approved by the NRC prior to implementation. Changes to the Bases implemented without prior NRC approval shall be provided to the NRC on a frequency consistent with 10 CFR 50.71e.

5.5.14 Safety Function Determination Program (SFDP)

This program ensures loss of safety function is detected and appropriate actions taken. Upon entry into LCO 3.0.6, an evaluation shall be made to determine if loss of safety function exists. Additionally, other appropriate actions may be taken as a result of the support system inoperability and corresponding exception to entering supported system Condition and Required Actions. This program implements the requirements of LCO 3.0.6. The SFDP shall contain the following:

a. Provisions for cross train checks to ensure a loss of the capability to perform the safety function assumed in the accident analysis does not go undetected;

b. Provisions for ensuring the plant is maintained in a safe condition if a loss of function condition exists;

c. Provisions to ensure that an inoperable supported system's Completion Time is not inappropriately extended as a result of multiple support system inoperabilities; and

d. Other appropriate limitations and remedial or compensatory actions.

A loss of safety function exists when, assuming no concurrent single failure, a safety function assumed in the accident analysis cannot be performed. For the purpose of this program, a loss of safety function may exist when a support system is inoperable, and:

a. A required system redundant to the supported system(s) is also inoperable; or

b. A required system redundant to the system(s) in turn supported by the inoperable supported system is also inoperable; or

c. A required system redundant to the inoperable support system(s) for the supported systems (a) and (b) above is also inoperable.

The SFDP identifies where a loss of safety function exists. If a loss of safety function is determined to exist by this program, the appropriate Conditions and Required Actions of the LCO in which the loss of safety function exists are required to be entered.

5.5.15 Containment Leakage Rate Testing Program

A program shall be established to implement the leakage rate testing of the containment as required by 10 CFR 50.54(o) and 10 CFR 50, Appendix J, Option B, as modified by approved exemptions. This program shall be in accordance with the guidelines contained in Regulatory Guide 1.163, "Performance-Based Containment Leak-Test Program," dated September 1995.

The peak calculated containment internal pressure for the design basis loss of coolant accident, P_a, is 60 psig.

The maximum allowable primary containment leakage rate, L_a, at P_a, shall be 0.2% of containment air weight per day.

Leakage Rate acceptance criteria are:

a. Containment leakage rate acceptance criterion is $\leq 1.0\ L_a$. During the first plant startup following testing in accordance with this program, the leakage rate acceptance criteria are $\leq 0.60\ L_a$ for the Type B and Type C tests and $\leq 0.75\ L_a$ for Type A tests;

b. Air lock testing acceptance criteria are:

   1. For each air lock, overall leakage rate is $\leq 0.05\ L_a$ when tested at $\geq P_a$, and

   2. For each door, leakage rate is $\leq 0.01\ L_a$ when tested at $\geq P_a$.

c. Mini-purge valve acceptance criteria is $\leq 0.05\ L_a$ when tested at $\geq P_a$.

The provisions of SR 3.0.2 do not apply to the test frequencies specified in the Containment Leakage Rate Testing Program.

The provisions of SR 3.0.3 do not apply to the test frequencies specified in the Containment Leakage Rate Testing Program.

5.5.16 Control Room Integrity Program (CRIP)

A program shall be established and implemented to ensure that control room envelope integrity is maintained. The program shall provide controls to limit radioactive gas and toxic gas leakage into the control room from sources external to the control room envelope to levels that support control room habitability. The program shall include guidance on the following elements:

a. Defining the control room envelope boundaries;

b. Assessing control room habitability;

c. Testing for control room in-leakage; and

d. Maintaining control room envelope integrity.

5.0 ADMINISTRATIVE CONTROLS

5.6 Reporting Requirements

The following reports shall be submitted in accordance with 10 CFR 50.4.

5.6.1 Occupational Radiation Exposure Report

A tabulation on an annual basis of the number of station, utility, and other personnel (including contractors) receiving exposures > 100 mrem/yr and their associated man rem exposure according to work and job functions (e.g., reactor operations and surveillance, inservice inspection, routine maintenance, special maintenance, waste processing, and refueling). This tabulation supplements the requirements of 10 CFR 20.2206. The dose assignments to various duty functions may be estimated based on pocket dosimeter, thermoluminescent dosimeter (TLD), or film badge measurements. Small exposures totalling < 20% of the individual total dose need not be accounted for. In the aggregate, at least 80% of the total whole body dose received from external sources should be assigned to specific major work functions. The report shall be submitted on or before April 30 of each year.

5.6.2 Annual Radiological Environmental Operating Report

The Annual Radiological Environmental Operating Report covering the operation of the plant during the previous calendar year shall be submitted by May 15 of each year. The report shall include summaries, interpretations, and analyses of trends of the results of the radiological environmental monitoring activities for the reporting period. The material provided shall be consistent with the objectives outlined in the Offsite Dose Calculation Manual (ODCM), and in 10 CFR 50, Appendix I, Sections IV.B.2, IV.B.3, and IV.C.

The Annual Radiological Environmental Operating Report shall include the results of analyses of all radiological environmental samples and of all environmental radiation measurements taken during the period pursuant to the locations specified in the table and figures in the ODCM, as well as summarized and tabulated results of these analyses and measurements in the format of the table in the Radiological Assessment Branch Technical Position, Revision 1, November 1979. In the event that some individual results are not available for inclusion with the report, the report shall be submitted noting and explaining the reasons for the missing results. The missing data shall be submitted in a supplementary report as soon as possible.

5.6.3 Radioactive Effluent Release Report

The Radioactive Effluent Release Report covering the operation of the plant shall be submitted in accordance with 10 CFR 50.36a. The report shall include a summary of the quantities of radioactive liquid and gaseous effluents and solid waste released from the plant. The material provided shall be consistent with the objectives outlined in the ODCM and in conformance with 10 CFR 50.36a and 10 CFR 50, Appendix I, Section IV.B.1.

5.6.4 Monthly Operating Reports

Routine reports of operating statistics and shutdown experience, including documentation of all challenges to the pressurizer power operated relief valves or pressurizer safety valves, shall be submitted on a monthly basis no later than the 15th of each month following the calendar month covered by the report.

5.6.5 CORE OPERATING LIMITS REPORT (COLR)

The following administrative requirements apply to the COLR:

a. Core operating limits shall be established prior to each reload cycle, or prior to any remaining portion of a reload cycle, and shall be documented in the COLR for the following:

LCO 3.1.1,	"SHUTDOWN MARGIN (SDM)";
LCO 3.1.3,	"MODERATOR TEMPERATURE COEFFICIENT (MTC)";
LCO 3.1.5,	"Shutdown Bank Insertion Limit";
LCO 3.1.6,	"Control Bank Insertion Limits";
LCO 3.2.1,	"Heat Flux Hot Channel Factor ($F_Q(Z)$)";
LCO 3.2.2,	"Nuclear Enthalpy Rise Hot Channel Factor ($F^N_{\Delta H}$)";
LCO 3.2.3,	"AXIAL FLUX DIFFERENCE (AFD)";
LCO 3.4.1,	"RCS Pressure, Temperature, and Flow Departure from Nucleate Boiling (DNB) Limits"; and
LCO 3.9.1,	"Boron Concentration."

b. The analytical methods used to determine the core operating limits shall be those previously reviewed and approved by the NRC, specifically those described in the following documents:

1. WCAP-9272-P-A, "Westinghouse Reload Safety Evaluation Methodology," July 1985.
(Methodology for LCO 3.1.1, LCO 3.1.3, LCO 3.1.5, LCO 3.1.6, LCO 3.2.1, LCO 3.2.2, LCO 3.2.3, and LCO 3.9.1.)

2. WCAP-13677-P-A, "10 CFR 50.46 Evaluation Model Report: WCOBRA/TRAC Two-Loop Upper Plenum Injection Model Updates to Support ZIRLO™ Cladding Option," February 1994.
(Methodology for LCO 3.2.1.)

3. WCAP-8385, "Power Distribution Control and Load Following Procedures - Topical Report," September 1974.
(Methodology for LCO 3.2.3.)

4. WCAP-12610-P-A, "VANTAGE + Fuel Assembly Reference Core Report," April 1995.
(Methodology for LCO 3.2.1.)

5. WCAP 11397-P-A, "Revised Thermal Design Procedure," April 1989.
(Methodology for LCO 3.4.1 when using RTDP.)

6. WCAP-10054-P-A and WCAP-10081-A, "Westinghouse Small Break ECCS Evaluation Model Using the NOTRUMP Code," August 1985.
(Methodology for LCO 3.2.1.)

7. WCAP-10924-P-A, Volume 1, Revision 1, "Westinghouse Large-Break LOCA Best-Estimate Methodology, Volume 1: Model Description and Validation Responses to NRC Questions," and Addenda 1,2,3, December 1988.
(Methodology for LCO 3.2.1.)

8. WCAP-10924-P-A, Volume 2, Revision 2, "Westinghouse Large-Break LOCA Best-Estimate Methodology, Volume 2: Application to Two-Loop PWRs Equipped with Upper Plenum Injection," and Addendum 1, December 1988.
(Methodology for LCO 3.2.1.)

9. WCAP-10924-P-A, Volume 1, Revision 1, Addendum 4, "Westinghouse Large-Break LOCA Best-Estimate Methodology, Volume 1: Model Description and Validation, Addendum 4: Model Revisions," March 1991.
(Methodology for LCO 3.2.1.)

c. The core operating limits shall be determined such that all applicable limits (e.g., fuel thermal mechanical limits, core thermal hydraulic limits, Emergency Core Cooling Systems (ECCS) limits, nuclear limits such as SDM, transient analysis limits, and accident analysis limits) of the safety analysis are met.

d. The COLR, including any midcycle revisions or supplements, shall be provided upon issuance for each reload cycle to the NRC.

5.6.6 Reactor Coolant System (RCS) PRESSURE AND TEMPERATURE LIMITS REPORT (PTLR)

The following administrative requirements apply to the PTLR:

a. RCS pressure and temperature limits for heatup, cooldown, criticality, and hydrostatic testing as well as heatup and cooldown rates shall be established and documented in the PTLR for the following:

LCO 3.4.3, "RCS Pressure and Temperature (P/T) Limits"

b. The power operated relief valve lift settings required to support the Low Temperature Overpressure Protection (LTOP) System, and the LTOP enable temperature shall be established and documented in the PTLR for the following:

LCO 3.4.6, "RCS Loops - MODE 4";

LCO 3.4.7, "RCS Loops - MODE 5, Loops Filled";

LCO 3.4.10, "Pressurizer Safety Valves"; and

LCO 3.4.12, "LTOP System."

c. The analytical methods used to determine the RCS pressure and temperature and LTOP limits shall be those previously reviewed and approved by the NRC in NRC letter, "R.E. Ginna - Acceptance for Referencing of Pressure Temperature Limits Report, Revision 2 (TAC No. M96529)," dated November 28, 1997. Specifically, the methodology is described in the following documents:

1. Letter from R.C. Mecredy, Rochester Gas and Electric Corporation (RG&E), to Document Control Desk, NRC, Attention: Guy S. Vissing, "Application for Facility Operating License, Revision to Reactor Coolant System (RCS) Pressure and Temperature Limits Report (PTLR) Administrative Controls Requirements," Attachment VI,

September 29, 1997, as supplemented by letter from R.C. Mecredy, RG&E, to Guy S. Vissing, NRC, "Corrections to Proposed Low Temperature Overpressure Protection System Technical Specification," October 8, 1997.

2. WCAP-14040-NP-A, "Methodology used to Develop Cold Overpressure Mitigating System Setpoints and RCS Heatup and Cooldown Limit Curves," Sections 1 and 2, January, 1996.

d. The PTLR shall be provided to the NRC upon issuance for each reactor vessel fluence period and for revisions or supplement thereto.

5.6.7 Control Room Emergency Air Treatment System (CREATS) Report

When a report is required by Condition C of LCO 3.7.9, "Control Room Emergency Air Treatment System (CREATS)," a report shall be submitted within the following 90 days. The report shall outline the compensatory measures, the cause of the inoperability, and the plans and schedule for restoring the CREATS to OPERABLE status.

Attachment 5

List of Regulatory Commitments

The following table identifies those actions committed to by RG&E in this document. Any other statements in this submittal are provided for information purposes and are not considered to be regulatory commitments. Please direct questions regarding these commitments to Mike Ruby, 585-771-3572.

REGULATORY COMMITMENT	DUE DATE
Develop procedures for compensatory actions in the event of a breach of the Control Room envelope.	Upon implementation of amendment
Resubmit LCO 3.3.6 and associated draft Basis	Upon NRC approval of RG&E License Amendment Request dated May 3, 2001
Perform a Tracer Gas In-Leakage test of the Control Room Envelope.	After completion of the planned modification
Develop a Control Room Integrity Program with the attributes listed in new specification 5.5.16	Prior to implementation of amendment

Attachment 6

Proposed Tech Spec Bases Changes

Note: These bases pages are being provided for information only to show the changes that RG&E intends to make following approval of the LAR. The bases are under RG&E control for all changes in accordance with Specification 5.5.13. RG&E requests that the NRC document acceptance of these bases changes in the SER.

Section B3.4.16, RCS Specific Activity

Section B3.6.6, Containment Spray (CS), Containment Recirculation Fan Cooler (CRFC), NaOH, and Containment Post Accident Charcoal Systems

Section B3.7.9, Control Room Emergency Air Treatment System (CREATS)

B 3.4 REACTOR COOLANT SYSTEM (RCS)

B 3.4.16 RCS Specific Activity

BASES

BACKGROUND

The maximum dose to the whole body and the thyroid that an individual at the site boundary can receive for 2 hours during an accident is specified in 10 CFR 100 (Ref. 1). The limits on specific activity ensure that the doses are held to a small fraction of the 10 CFR 100 limits during analyzed transients and accidents.

The RCS specific activity LCO limits the allowable concentration level of radionuclides in the reactor coolant. The LCO limits are established to minimize the offsite radioactivity dose consequences in the event of a steam generator tube rupture (SGTR) accident.

The specific activity limits for both DOSE EQUIVALENT I-131 and gross specific activity are provided in the SRs. ~~DOSE EQUIVALENT I-131 is calculated using Table E-7 of Regulatory Guide 1.109 (Ref. 2).~~ The allowable levels are intended to limit the 2 hour dose at the site boundary to a small fraction of the 10 CFR 100 dose guideline limits. The limits in the LCO are standardized, based on parametric evaluations of offsite radioactivity dose consequences for typical site locations.

The parametric evaluations showed the potential offsite dose levels for a SGTR accident were an appropriately small fraction of the 10 CFR 100 dose guideline limits. Each evaluation assumes a broad range of site applicable atmospheric dispersion factors in a parametric evaluation.

APPLICABLE SAFETY ANALYSES

The LCO limits on the specific activity of the reactor coolant ensures that the resulting 2 hour doses at the site boundary will not exceed a small fraction of the 10 CFR 100 dose guideline limits following a SGTR accident. The SGTR safety analysis (Ref. ~~3~~ 2) assumes the specific activity of the reactor coolant at the LCO limit and an existing reactor coolant steam generator (SG) tube leakage rate of ~~0.5 gpm.~~ 150 gpd

The analysis for the SGTR accident establishes the acceptance limits for RCS specific activity. Reference to this analysis is used to assess changes to the plant that could affect RCS specific activity, as they relate to the acceptance limits.

335 eight 3

The analysis is for two cases of reactor coolant specific activity (Ref. ~~4~~). One case assumes specific activity at 1.0 μCi/gm DOSE EQUIVALENT I-131 with a concurrent large iodine spike that increases the I-131 activity in the reactor coolant by a factor of ~~about 500~~ for a duration of ~~four~~ hours immediately after the accident. The second case assumes the initial reactor coolant iodine activity at 60.0 μCi/gm DOSE EQUIVALENT I-131 due to a pre-accident iodine spike caused by an RCS transient. In both cases, the noble gas activity in the reactor coolant assumes 1% failed fuel, which closely equals the LCO limit of 100/$\bar{E}$ μCi/gm for gross specific activity.

The SGTR causes a reduction in reactor coolant inventory. The reduction initiates a reactor trip from a low pressurizer pressure signal or an RCS overtemperature ΔT signal. The analysis also assumes a loss of offsite power at the same time as the reactor trip following the SGTR event.

The coincident loss of offsite power causes the steam dump valves to close to protect the condenser. The rise in pressure in the ruptured SG discharges radioactively contaminated steam to the atmosphere through the SG atmospheric relief valves and the main steam safety valves. This steam release continues for eight hours until the residual heat removal system is utilized for cooldown purposes. All noble gas activity in the RCS which is transported to the secondary system by the tube rupture is assumed to be immediately released to the atmosphere. The unaffected SG removes core decay heat by venting steam to the atmosphere until the initial cooldown ends and the RCS system pressure stabilizes below the relief valve setpoint.

The safety analysis shows the radiological consequences of an SGTR accident are within a small fraction of the Reference 1 dose guideline limits. Operation with iodine specific activity levels greater than the LCO limit is permissible, if the activity levels do not exceed ~~the limits shown in Figure 3.4.16-1~~ 60 μCi/gm for more than 7 days.

The increased permissible iodine levels ~~shown in Figure 3.4.16-1~~ are acceptable because of the low probability of a SGTR accident occurring during the established 7 day time limit. The occurrence of an SGTR accident at these permissible levels could increase the site boundary dose levels, but they would still be within 10 CFR 100 dose guideline limits.

RCS specific activity satisfies Criterion 2 of the NRC Policy Statement.

LCO

The specific iodine activity is limited to 1.0 μCi/gm DOSE EQUIVALENT I-131, and the gross specific activity in the reactor coolant is limited to 100/$\bar{E}$ μCi/gm (where $\bar{E}$ is the average disintegration energy of the sum of the average beta and gamma energies of the coolant nuclides). The limit on DOSE EQUIVALENT I-131 ensures the 2 hour thyroid dose to an individual at the site boundary during the Design Basis Accident (DBA) will be a small fraction of the allowed thyroid dose. The limit on gross specific activity ensures the 2 hour whole body dose to an individual at the site boundary during the DBA will be a small fraction of the allowed whole body dose.

The SGTR accident analysis (Ref. ~~3~~ 2) shows that the 2 hour site boundary dose levels are within acceptable limits. Violation of the LCO may result in reactor coolant radioactivity levels that could, in the event of an SGTR, lead to site boundary doses that exceed the 10 CFR 100 dose guideline limits.

APPLICABILITY

In MODES 1 and 2, and in MODE 3 with RCS average temperature ≥ 500°F, operation within the LCO limits for DOSE EQUIVALENT I-131 and gross specific activity are necessary to contain the potential consequences of an SGTR to within the acceptable site boundary dose values.

For operation in MODE 3 with RCS average temperature < 500°F, and in MODES 4 and 5, the release of radioactivity in the event of a SGTR is unlikely since the saturation pressure of the reactor coolant is below the lift pressure settings of the main steam safety valves.

ACTIONS

A.1 and A.2

With the DOSE EQUIVALENT I-131 greater than the LCO limit, samples at intervals of 8 hours must be taken to demonstrate that the limits of 60 μCi/gm ~~Figure 3.4.16-1~~ are not exceeded. The Completion Time of 8 hours is required to obtain and analyze a sample. Sampling is done to continue to provide a trend.

The DOSE EQUIVALENT I-131 must be restored to within limits within 7 days if the limit violation resulted from normal iodine spiking.

Required Action A.1 is modified by a Note that indicates that the provisions of LCO 3.0.4 are not applicable. As a result, a MODE change is allowed when the DOSE EQUIVALENT I-131 is greater than the LCO limit and less than 60 μCi/gm ~~within the acceptable range of Figure 3.4.16-1~~. This allowance is provided because of the significant conservatism included in the LCO limit. Also, reducing the DOSE EQUIVALENT I-131 to within limits is accomplished through use of the Chemical and Volume Control System (CVCS) demineralizers. This cleanup operation parallels plant restart following a reactor trip which frequently results in iodine spikes due to the large step decrease in reactor power level and RCS pressure excursion. The cleanup operation can normally be accomplished within the LCO Completion Time of 7 days.

B.1

If a Required Action and the associated Completion Time of Condition A is not met or if the DOSE EQUIVALENT I-131 specific activity is greater than 60 μCi/gm ~~in the unacceptable region of Figure 3.4.16-1~~, the reactor must be brought to MODE 3 with RCS average temperature < 500°F within 8 hours. The change within 8 hours to MODE 3 and RCS average temperature < 500°F lowers the saturation pressure of the reactor coolant below the setpoints of the main steam safety valves and prevents automatically venting the SG to the environment in an SGTR event. The Completion Time of 8 hours is reasonable, based on operating experience, to reach MODE 3 below 500°F from full power conditions in an orderly manner and without challenging plant systems.

C.1

If the gross specific activity is not within limit, the change within 8 hours to MODE 3 and RCS average temperature < 500°F lowers the saturation pressure of the reactor coolant below the setpoints of the main steam safety valves and prevents automatically venting the SG to the environment in an SGTR event. The allowed Completion Time of 8 hours is reasonable, based on operating experience, to reach MODE 3 below 500°F from full power conditions in an orderly manner and without challenging plant systems.

SURVEILLANCE REQUIREMENTS

SR 3.4.16.1

This SR requires performing a gamma isotopic analysis as a measure of the gross specific activity of the reactor coolant at least once every 7 days. While basically a quantitative measure of radionuclides with half lives longer than 15 minutes, excluding iodines, this measurement is the sum of the degassed gamma activities and the gaseous gamma activities in the sample taken. This Surveillance provides an indication of any increase in gross specific activity.

Trending the results of this Surveillance allows proper remedial action to be taken before reaching the LCO limit under normal operating conditions. The Surveillance is applicable in MODES 1 and 2, and in MODE 3 with $T_{avg} \geq 500°F$. The 7 day Frequency considers the unlikelihood of a gross fuel failure during this time.

SR 3.4.16.2

This SR is only performed in MODE 1 to ensure iodine remains within limits during normal operation and following fast power changes when fuel failure is more likely to occur. The 14 day Frequency is adequate to trend changes in the iodine activity level, considering gross activity is monitored every 7 days. The Frequency, between 2 and 10 hours after a power change ≥ 15% RTP within a 1 hour period, is established because the iodine levels peak during this time following fuel failure; samples at other times would provide inaccurate results.

SR 3.4.16.3

A radiochemical analysis for $\bar{E}$ determination is required within 31 days after a minimum of 2 effective full power days and 20 days of MODE 1 operation have elapsed since the reactor was last subcritical for at least 48 hours and every 184 days (6 months) thereafter. This ensures that the radioactive materials are at equilibrium so the analysis for $\bar{E}$ is representative and not skewed by a crud burst or other similar abnormal event. The $\bar{E}$ determination directly relates to the LCO and is required to verify plant operation within the specified gross activity LCO limit. The analysis for $\bar{E}$ is a measurement of the average energies per disintegration for isotopes with half lives longer than 15 minutes, excluding iodines. The Frequency recognizes $\bar{E}$ does not change rapidly.

This SR is modified by a Note that indicates sampling is only required to be performed in MODE 1 such that equilibrium conditions are present during the sample.

REFERENCES

1. 10 CFR 100.11.

~~2. Regulatory Guide 1.109, Revision 1.~~

2 ~~3~~. UFSAR, Section 15.6.3.

3 ~~4~~. WCAP-11668, "LOFTTR2 Analysis of Potential Radiological Consequences Following a SGTR at the R.E. Ginna Nuclear Power Plant," November 1987.

B 3.6 CONTAINMENT SYSTEMS

B 3.6.1 Containment

BASES

BACKGROUND

The containment consists of the concrete containment structure, its steel liner, and the penetrations through this structure. The structure is designed to contain radioactive material that may be released from the reactor core following a Design Basis Accident (DBA) in accordance with Atomic Industry Forum (AIF) GDC 10 and 49 (Ref. 1). Additionally, this structure provides shielding from the fission products that may be present in the containment atmosphere following accident conditions.

The containment is a reinforced concrete structure with a cylindrical wall, a flat base mat, and a hemispherical dome roof. The inside surface of the containment is lined with a carbon steel liner to ensure a high degree of leak tightness during operating and accident conditions. Each weld seam on the inside of the liner has a leak test channel welded over it to allow independent testing of the liner when the containment is open. The liner is also insulated with closed-cell polyvinyl foam covered with metal sheeting up to a point above the spring line and below the containment spray ring headers. The function of the liner insulation is to limit the mean temperature rise of the liner to only 10°F at the time associated with maximum pressure following a DBA (Ref. 2).

The containment hemispherical dome is constructed of reinforced concrete designed for all DBA related moments, axial loads, and shear forces. The cylinder wall is prestressed vertically and reinforced circumferentially with mild steel deformed bars. The base mat is a reinforced concrete slab that is connected to the cylinder wall by use of a hinge design which prevents the transfer of imposed shear from the cylinder wall to the base mat. This hinge consists of elastomer bearing pads located between the bottom of the cylinder wall and the base mat, and high strength steel bars which connect the cylinder walls horizontally to the base mat (Ref. 2).

The cylinder wall is connected to sandstone rock located beneath the containment by use of 160 post-tensioned rock anchors that are coupled with tendons located in the cylinder wall. This design ensures that the rock acts as an integral part of the containment structure.

The concrete containment structure is required for structural integrity of the containment under DBA conditions. The steel liner and its penetrations establish the leakage limiting boundary of the containment. Maintaining the containment OPERABLE limits the leakage of fission product radioactivity from the containment to the outside environment to within the limits of 10 CFR 100 (Ref. 3). SR 3.6.1.1 leakage rate requirements comply with 10 CFR 50, Appendix J, Option B (Ref. 4), as modified by approved exemptions.

The isolation devices for the penetrations in the containment boundary are a part of the containment leak tight barrier. To maintain this leak tight barrier:

a. All penetrations required to be closed during accident conditions are either:

   1. Capable of being closed by an OPERABLE automatic containment isolation system, or

   2. Closed by OPERABLE containment isolation boundaries, except as provided in LCO 3.6.3, "Containment Isolation Boundaries."

b. Each air lock is OPERABLE, except as provided in LCO 3.6.2, "Containment Air Locks."

APPLICABLE SAFETY ANALYSES

The safety design basis for the containment is that the containment must withstand the pressures and temperatures of the limiting DBA without exceeding the design leakage rate.

The DBAs that result in a challenge to containment OPERABILITY from high pressures and temperatures are a loss of coolant accident (LOCA), a steam line break, and a rod ejection accident (REA) (Ref. 5). In addition, release of significant fission product radioactivity within containment can occur from a LOCA or REA. In the DBA analyses, it is assumed that the containment is OPERABLE such that, for the DBAs involving release of fission product radioactivity, release to the environment is controlled by the rate of containment leakage. The containment was originally strength tested at 69 psig (115% of design). The acceptance criteria for this test was 0.1% of the containment air weight per day at 60 psig which was based on the construction techniques that were used (Ref. 5). Following successful completion of this test, the accident analyses were performed assuming a leakage rate of 0.2% of the containment air weight per day. This leakage rate, in combination with the minimum containment engineered safeguards operating (i.e., either 2 post-accident charcoal filter trains and no containment spray, 1 post-accident charcoal filter train and 1 containment

spray train, or no post-accident charcoal filter trains and 2 containment spray trains) results in offsite doses well within the limits of 10 CFR 100 (Ref. 3) in the event of a DBA.

The leakage rate of 0.2% of the containment air weight per day is defined in 10 CFR 50, Appendix J, Option B (Ref. 4), as L_a: the maximum allowable containment leakage rate at the calculated peak containment internal pressure (P_a) resulting from the design basis LOCA. The allowable leakage rate represented by L_a forms the basis for the acceptance criteria imposed on all containment leakage rate testing. L_a is assumed to be 0.2% per day in the safety analysis at P_a = 60 psig.

Satisfactory leakage rate test results are a requirement for the establishment of containment OPERABILITY.

The containment satisfies Criterion 3 of the NRC Policy Statement.

LCO

Containment OPERABILITY is maintained by limiting leakage to ≤ 1.0 L_a except prior to entering MODE 4 for the first time following performance of periodic testing performed in accordance with 10 CFR 50, Appendix J, Option B. At that time, the combined Type B and C leakage must be < 0.6 L_a on a maximum pathway leakage rate (MXPLR) basis, and the overall Type A leakage must be < 0.75 L_a. At all other times prior to performing as found testing, the acceptance criteria for Type B and C testing is < 0.6 L_a on a minimum pathway leakage rate (MNPLR) basis. In addition to leakage considerations following a design basis LOCA, containment OPERABILITY also requires structural integrity following a DBA. Also considered for OPERABILITY is leakage from the Containment Spray, Safety Injection, and Residual Heat Removal systems as addressed in Specification 5.5.2, "Primary Coolant Sources Outside Containment Program" since these systems function as an extension of containment during the recirculation phase of a LOCA. The limit on total leakage from the portion of these three systems subject to Specification 5.5.2 is ~~2.75~~ 2.0 gallons per hour (Ref. 9).

Compliance with this LCO will ensure a containment configuration, including personnel and equipment hatches, that is structurally sound and that will limit leakage to those leakage rates assumed in the safety analysis.

Individual leakage rates specified for the containment air lock (LCO 3.6.2) and mini-purge valves with resilient seals (LCO 3.6.3) and administrative limits for individual isolation boundaries are not specifically part of the acceptance criteria of 10 CFR 50, Appendix J. Therefore, leakage rates exceeding these individual limits only result in the containment being inoperable when the leakage results in exceeding the acceptance criteria of Appendix J.

APPLICABILITY

In MODES 1, 2, 3, and 4, a DBA could cause a release of radioactive material into containment. In MODE 5, the probability and consequences of these events are reduced due to the pressure and temperature limitations of this MODE. Therefore, containment is not required to be OPERABLE in MODE 5 to prevent leakage of radioactive material from containment. The requirements for containment during MODE 6 are addressed in LCO 3.9.3, "Containment Penetrations."

ACTIONS

A.1

In the event containment is inoperable, the containment must be restored to OPERABLE status within 1 hour. The 1 hour Completion Time provides a period of time to correct the problem commensurate with the importance of maintaining containment during MODES 1, 2, 3, and 4. This time period also ensures that the probability of an accident (requiring containment OPERABILITY) occurring during periods when containment is inoperable is minimal.

B.1 and B.2

If containment cannot be restored to OPERABLE status within the required Completion Time, the plant must be brought to a MODE in which the LCO does not apply. To achieve this status, the plant must be brought to at least MODE 3 within 6 hours and to MODE 5 within 36 hours. The allowed Completion Times are reasonable, based on operating experience, to reach the required plant conditions from full power conditions in an orderly manner and without challenging plant systems.

SURVEILLANCE REQUIREMENTS

SR 3.6.1.1

Maintaining the containment OPERABLE requires compliance with the visual examinations and leakage rate test requirements of the Containment Leakage Rate Testing Program. Failure to meet air lock and mini-purge valve with resilient seal leakage limits specified in LCO 3.6.2 and LCO 3.6.3 does not invalidate the acceptability of these overall leakage determinations unless their contribution to overall Type A, B, and C leakage causes these limits to be exceeded. As left leakage prior to entering MODE 4 for the first time following performance of required 10 CFR 50, Appendix J periodic testing, is required to be $< 0.6\ L_a$ for combined Type B and C leakage on a MXPLR basis, and $< 0.75\ L_a$ for overall Type A leakage (Ref. 6). At all other times between the required leakage tests, the acceptance criteria is based on an overall Type A leakage limit of $\leq 1.0\ L_a$. This is maintained by limiting combined Type B and C leakage to $< 0.6\ L_a$ on a MNPLR basis until performance of as found testing. At $\leq 1.0\ L_a$, the offsite dose consequences are bounded by the assumptions of the safety analysis. SR Frequencies are as required by the Containment Leakage Rate Testing Program. These periodic testing requirements verify that the containment leakage rate does not exceed the leakage rate assumed in the safety analysis.

SR 3.6.1.2

This SR ensures that the structural integrity of the containment will be maintained in accordance with the provisions of the Containment Tendon Surveillance Program. Testing and Frequency are generally consistent with the recommendations of Regulatory Guide 1.35 (Ref. 7) except that tendon material tests and inspections are not required (Ref. 8).

REFERENCES

1. Atomic Industry Forum, GDC 10 and 49, issued for comment July 10, 1967.

2. UFSAR, Section 3.8.1.

3. 10 CFR 100.

4. 10 CFR 50, Appendix J, Option B.

5. UFSAR, Section 6.2.

6. NEI 94-01, "Industry Guideline for Implementing Performance-Based Option of 10 CFR 50, Appendix J," Revision 0.

7. Regulatory Guide 1.35, Revision 2.

8. Letter from J. A. Zwolinski, NRC, to R.W. Kober, RG&E, Subject: "Safety Evaluation, Containment Vessel Tendon Surveillance Program," dated August 19, 1985.

9. ~~Letter from R. H. Owoc, Westinghouse, to R. W. Eliasz, RG&E, Subject: "Radiological Consequences from a Large Break LOCA," dated~~ November 1, 1996.

9. Design Analysis DA-NS-2001-087, Large-Break LOCA Offsite and Control Room Doses, Rev 1

and systems [all pages in section]

B 3.6 CONTAINMENT SYSTEMS

B 3.6.6 Containment Spray (CS), Containment Recirculation Fan Cooler (CFRC), NaOH, ~~and Containment Post-Accident Charcoal~~ Systems

and

BASES

BACKGROUND

The CS and CRFC systems provide containment atmosphere cooling to limit post accident pressure and temperature in containment to less than the design values. Reduction of containment pressure and the iodine removal capability of the CS System, NaOH System, ~~and the Containment Post-Accident Charcoal System connected to the CRFC units~~ reduces the release of fission product radioactivity from containment to the environment, in the event of a Design Basis Accident (DBA), to within limits. The CS, CRFC, NaOH, ~~and Containment Post-Accident Charcoal Systems~~ are designed to meet the requirements of Atomic Industry Forum (AIF) GDC 49, 52, 58, 59, 60, and 61 (Ref. 1). The CS, NaOH, ~~and Post-Accident Charcoal Systems~~ also are designed to limit offsite doses following a DBA within 10 CFR 100 guidelines.

and the

and

and

and

The CRFC System, CS System, NaOH System, ~~and the Containment Post-Accident Charcoal System~~ are Engineered Safety Feature (ESF) systems. They are designed to ensure that the heat removal capability required during the post accident period can be attained and reduce the potential release of radioactive material, principally iodine, from the containment to the outside environment. The CS System, CRFC System, NaOH System, ~~and the Containment Post-Accident Charcoal System~~ provide redundant methods to limit and maintain post accident conditions to less than the containment design values.

and

Containment Spray and NaOH Systems

The CS System consists of two redundant, 100% capacity trains. Each train includes a pump, spray headers, spray eductors, nozzles, valves, and piping (see Figure B 3.6.6-1). Each train is powered from a separate ESF bus. The refueling water storage tank (RWST) supplies borated water to the CS System during the injection phase of operation through a common supply header shared by the safety injection (SI) system. In the recirculation mode of operation, CS pump suction can be transferred from the RWST to Containment Sump B via the residual heat removal (RHR) system.

The CS System provides a spray of cold borated water mixed with sodium hydroxide (NaOH) from the spray additive tank into the upper regions of containment to reduce the containment pressure and temperature and to scavenge fission products from the containment atmosphere during a DBA. The RWST solution temperature is an important factor in determining the heat removal capability of the CS System during the injection phase. In the recirculation mode of operation, heat is removed from the containment sump water by the residual heat removal coolers. However, the CS System can provide additional containment heat removal capability if required. Each train of the CS System provides adequate spray coverage to meet the system design requirements for containment heat removal.

The NaOH mixture is injected into the CS flowpath via a liquid eductor during the injection phase of an accident. The eductors ensure that the pH of the spray mixture is a caustic solution. ~~The resulting alkaline pH of the spray enhances the ability of the spray to scavenge fission products from the containment atmosphere~~. The NaOH added in the spray ~~also~~ ensures an alkaline pH for the solution recirculated in the containment sump. The alkaline pH of the containment sump water minimizes the evolution of iodine and minimizes the occurrence of chloride and caustic stress corrosion on mechanical systems and components exposed to the fluid (Ref. 2).

The CS System is actuated either automatically by a containment Hi-Hi pressure signal or manually. DBAs which can generate an automatic actuation signal include the loss of coolant accident (LOCA) and steam line break (SLB). An automatic actuation opens the CS pump motor operated discharge valves (860A, 860B, 860C, and 860D), opens NaOH addition valves 836A and 836B, starts the two CS pumps, and begins the injection phase. A manual actuation of the CS System requires the operator to actuate two separate pushbuttons simultaneously on the main control board to begin the same sequence. The injection phase continues until an RWST low level alarm is received signaling the start of the recirculation phase of the accident.

During the recirculation phase of LOCA recovery, RHR pump suction is manually transferred to Containment Sump B (Refs. 3 and 4). This transfer is accomplished by stopping the RHR pumps, isolating RHR from the RWST by closing motor operated valve 856, opening the Containment Sump B motor operated isolation valves to RHR (850A and 850B) and then starting the RHR pumps. The SI and CS pumps are then stopped and the RWST isolated by closing motor operated isolation valve 896A or 896B for the SI and CS pump common supply header and closing motor operated isolation valve 897 or 898 for the SI pumps recirculation line.

The RHR pumps then supply the SI pumps if the RCS pressure remains above the RHR pump shutoff head as correlated through core exit temperature, containment pressure, and reactor vessel level indications (Ref. 5). This high-head recirculation path is provided through RHR motor operated isolation valves 857A, 857B, and 857C. These isolation valves are interlocked with 896A, 896B, 897, and 898. This interlock prevents opening of the RHR high head recirculation isolation valves unless either 896A or 896B are closed and either 897 or 898 are closed. If RCS pressure is such that RHR provides adequate injection flow for core cooling, the SI pumps remain in pull-stop.

The CS System is only used during the recirculation phase if containment pressure increases above a pressure at which containment integrity is potentially challenged. Otherwise, the containment heat removal provided by the CRFC units and Containment Sump B (via the RHR system) is adequate to support containment heat removal needs and the limits on sump pH (Refs. 2 and 6).

Operation of the CS System in the recirculation mode is controlled by the operator in accordance with the emergency operating procedures.

Containment Recirculation Fan Cooler System

The CRFC System consists of four fan units (A, B, C, and D). Each cooling unit consists of a motor, fan, cooling coils, dampers, moisture separators, high efficiency particulate air (HEPA) filters, duct distributors and necessary instrumentation and controls (see Figure B 3.6.6-2). ~~The moisture separators function to reduce the moisture content of the airstream to support the effectiveness of the post-accident charcoal filters.~~ CRFC units A and D are supplied by one ESF bus while CRFC units B and C are supplied by a redundant ESF bus. All four CRFC units are supplied cooling water by the Service Water (SW) System via a common loop header. Air is drawn into the coolers through the fan and discharged into the containment atmosphere including the various compartments (e.g., steam generator and pressurizer compartments).

During normal operation, at least two fan units are typically operating. The CRFC System, operating in conjunction with other containment ventilation and air conditioning systems, is designed to limit the ambient containment air temperature during normal plant operation to less than the limit specified in LCO 3.6.5, "Containment Air Temperature." This temperature limitation ensures that the containment temperature does not exceed the initial temperature conditions assumed for the DBAs.

In post accident operation following a SI actuation signal, the CRFC System fans are designed to start automatically if not already running. ~~The discharge of CRFC units A and C then transfer to force flow through the post-accident charcoal filters.~~ The temperature of the cooling water supplied by SW System (LCO 3.7.8) is an important factor in the heat removal capability of the fan units.

~~Containment Post-Accident Charcoal System~~

~~The Containment Post-Accident Charcoal System consists of two redundant, 100% capacity trains. Each train includes an airtight plenum containing two banks of charcoal filter cells for removal of radioiodines (see Figure 3.6.6-2). Air flow enters the plenum through two holes in the bottom (one at each end), passes through the charcoal filter banks to the center, and is exhausted from the plenum through a hole in the top. Two normally closed air operated dampers isolate each post-accident charcoal filter train from CRFC units A and C (dampers 5871 and 5872 for Train A and 5874 and 5876 for Train B). A SI signal opens these dampers and closes two bypass dampers from the CRFC units (dampers 5873 for CRFC unit A and 5875 for CRFC unit C) to force flow through the post-accident charcoal filters.~~

APPLICABLE SAFETY ANALYSES

The CS System and CRFC System limit the temperature and pressure that could be experienced following a DBA. The limiting DBAs considered are the LOCA and the SLB which are analyzed using computer codes designed to predict the resultant containment pressure and temperature transients. No two DBAs are assumed to occur simultaneously or consecutively. The postulated DBAs are analyzed with regard to containment ESF systems, assuming the worst case single active failure.

The analysis and evaluation show that under the worst case scenario, the highest peak containment pressure is 59.8 psig and the peak containment temperature is 374°F (both experienced during an SLB). Both results meet the intent of the design basis. (See the Bases for LCO 3.6.4, "Containment Pressure," and LCO 3.6.5," Containment Temperature," for a detailed discussion.) The analyses and evaluations assume a plant specific power level of 102%, one CS train and one containment cooling train operating, and initial (pre-accident) containment conditions of 120°F and 1.0 psig. The analyses also assume a response time delayed initiation to provide conservative peak calculated containment pressure and temperature responses.

For certain aspects of transient accident analyses, maximizing the calculated containment pressure is not conservative. In particular, the effectiveness of the Emergency Core Cooling System during the core reflood phase of a LOCA analysis increases with increasing containment backpressure. For these calculations, the containment backpressure is calculated in a manner designed to conservatively minimize, rather than maximize, the containment pressure response in accordance with 10 CFR 50, Appendix K (Ref. 7).

The effect of an inadvertent CS actuation is not considered since there is no single failure, including the loss of offsite power, which results in a spurious CS actuation.

The modeled CS System actuation for the containment analysis is based on a response time associated with exceeding the containment Hi-Hi pressure setpoint to achieving full flow through the CS nozzles. To increase the response of the CS System, the injection lines to the spray headers are maintained filled with water. The CS System total response time is 28.5 seconds for one pump to the upper spray header and 26.5 seconds for two pumps (average time between upper and lower spray headers). These total response times (assuming the containment Hi-Hi pressure is reached at time zero) includes opening of the motor operated isolation valves, containment spray pump startup, and spray line filling (Ref. 8).

The modeled CRFC System actuation for the containment analysis is based upon a response time associated with exceeding the SI actuation levels to achieving full CRFC System air and safety grade cooling water flow. The CRFC System total response time of 44 seconds, includes signal delay, DG startup (for loss of offsite power), and service water pump and CRFC unit startup times (Ref. 9).

During a SLB or LOCA, a minimum of two CRFC units and one CS train are required to maintain containment peak pressure and temperature below the design limits.

and systems

The CS, NaOH, ~~and Containment Post-Accident Charcoal Systems~~ operate to reduce the release of fission product radioactivity from containment to the outside environment in the event of a DBA. The DBAs that result in a release of radioactive iodine within containment are the LOCA or a rod ejection accident (REA). In the analysis for each of these accidents, it is assumed that adequate containment leak tightness is intact at event initiation to limit potential leakage to the environment. Additionally, it is assumed that the amount of radioactive iodine released is limited by reducing the iodine concentration present in the containment atmosphere.

and systems

The required iodine removal capability of the CS, NaOH, ~~and Containment Post-Accident Charcoal Systems~~ is established by the consequences of the limiting DBA, which is a LOCA. The accident analyses (Ref. 10) assume that ~~either two~~ train~~s~~ of CS (taking suction from the NaOH System), ~~one CS train~~ and one ~~post-accident charcoal filter train, or two post-accident charcoal filter trains~~ operate to remove radioactive iodine from the containment atmosphere.

one ~~and~~ CRFC train

and

The CS System, CRFC System, NaOH System, ~~and the Containment Post-Accident Charcoal System~~ satisfy Criterion 3 of the NRC Policy Statement.

LCO

During a DBA, a minimum of 2 CRFC units and one CS train are required to maintain the containment peak pressure and temperature below the design limits (Ref. 8). Additionally, ~~two~~ CS train~~s~~ taking suction from the NaOH System and two CRFC units ~~with post-accident charcoal filters (i.e., units A and C), or one CRFC unit with post-accident charcoal filters in combination with one CS train~~ are also required to remove iodine from the containment atmosphere and maintain concentrations below those assumed in the safety analysis. To ensure that these requirements are met, two CS trains, four CRFC units, ~~and two post-accident charcoal filter trains~~ and the NaOH System must be OPERABLE. Therefore, in the event of an accident, at least one CS ~~and post-accident charcoal filter~~ train, the NaOH System, and two CRFC units operate, assuming the worst case single active failure occurs.

Each CS train includes a spray pump, spray headers, nozzles, valves, spray eductors, piping, instruments, and controls to ensure an OPERABLE flow path capable of taking suction from the RWST upon an ESF actuation signal and manually transferring suction to Containment Sump B via the RHR pumps.

For the NaOH System to be OPERABLE, the volume and concentration of spray additive solution in the tank must be within limits and air operated valves 836A and 836B must be OPERABLE.

Each CRFC unit includes a motor, fan cooling coils, dampers, moisture separators, HEPA filters, duct distributors, instruments, and controls to ensure an OPERABLE flow path. ~~For CRFC units A and C, flow through either the post-accident charcoal filter or the bypass is required for the units to be considered OPERABLE.~~

~~Each post-accident charcoal filter train includes a plenum containing charcoal filter banks and isolation dampers to ensure an OPERABLE flow path. CRFC units A and C are also required to be OPERABLE.~~

The LCO is modified by a Note which states that in MODE 4, both CS pumps may be placed in pull-stop, with power restored to motor operated valves 896A and 896B and the valves placed in the closed position for interlock and valve testing of motor operated valves 857A, 857B, and 857C. This Note provides 2 hours for each test of each motor operated valve 857A, 857B, and 857C. The Note is required since the installed interlocks on 857A, 857B, and 857C require closure of valves 896A and 896B while other valve testing (e.g., differential pressure tests) require a pressurized RHR system. Performance of these tests in MODEs 5 and 6 would render the RHR system inoperable when it is required for core cooling.

APPLICABILITY

In MODES 1, 2, 3, and 4, a DBA could cause a release of radioactive material to containment and an increase in containment pressure and temperature requiring the operation of the CS System, CRFC System, and NaOH System, ~~and the Post-Accident Charcoal System~~.

In MODES 5 and 6, the probability and consequences of these events are reduced due to the pressure and temperature limitations of these MODES. Thus, the CS System, CRFC System, and NaOH System, ~~and the Post-Accident Charcoal System~~ are not required to be OPERABLE in MODES 5 and 6.

ACTIONS

A.1

With one CS train inoperable, the inoperable CS train must be restored to OPERABLE status within 72 hours. In this Condition, the remaining OPERABLE spray and CRFC units are adequate to perform the iodine removal and containment cooling functions. The 72 hour Completion Time takes into account the redundant heat and iodine removal capability afforded by the CRFCs, ~~the redundant iodine removal afforded by the Containment Post-Accident Charcoal System~~, reasonable time for repairs, and low probability of a DBA occurring during this period.

~~B.1~~

~~With one post-accident charcoal filter train inoperable, the inoperable train must be restored to OPERABLE status within 7 days. Each post-accident charcoal filter train is capable of providing 50% of the radioactive iodine removal requirements following a DBA. The loss of CRFC unit A or C also results in its associated post-accident charcoal filter train being inoperable since the post-accident charcoal filter trains do not have their own fan assembly. The 7 day Completion Time of Required Action B.1 to restore the inoperable post-accident charcoal filter train, including the CRFC unit, is justified considering the redundant iodine removal capabilities afforded by the CS and NaOH Systems and the low probability of a DBA occurring during this time period.~~

~~C.1~~

~~With both post-accident charcoal filter trains inoperable, at least one post-accident charcoal filter train must be restored to OPERABLE status within 72 hours. The 72 hour Completion Time to restore one inoperable post-accident charcoal filter train is justified considering the redundant iodine removal capabilities afforded by the CS System and the low probability of a DBA occurring during this time period. The inoperable post-accident charcoal filter train includes, but is not limited to inoperable CRFC units A and C.~~

B ~~D~~.1

With the NaOH System inoperable, OPERABLE status must be restored within 72 hours. ~~The 72 hour Completion Time to restore the NaOH System is justified considering the redundant iodine removal capabilities afforded by the Containment Post-Accident Charcoal System and the low probability of a DBA occurring during this time period.~~

C ~~E~~.1 and C ~~E~~.2

If the inoperable CS train, ~~post-accident charcoal filter trains,~~ or the NaOH System cannot be restored to OPERABLE status within the required Completion Time, the plant must be brought to a MODE in which the LCO does not apply. To achieve this status, the plant must be brought to at least MODE 3 within 6 hours and to MODE 5 within 84 hours. The allowed Completion Time of 6 hours is reasonable, based on operating experience, to reach MODE 3 from full power conditions in an orderly manner and without challenging plant systems. The extended interval to reach MODE 5 allows additional time for attempting restoration of the inoperable component(s) and is reasonable when considering the driving force for a release of radioactive material from the Reactor Coolant System is reduced in MODE 3.

D ~~F~~.1 ~~and F.2~~

With one or two CRFC units inoperable, ~~the affected post-accident charcoal filter must be declared inoperable immediately and~~ the inoperable CRFC unit(s) must be restored to OPERABLE status within 7 days. The inoperable CRFC units provided up to 100% of the containment heat removal needs ~~and up to 50% of the iodine removal needs~~. The 7 day Completion Time is justified considering the redundant heat removal capabilities afforded by combinations of the CS System and CRFC System and the low probability of DBA occurring during this period. ~~If both CRFC units A and C are inoperable, then Condition G must also be entered.~~

The pH adjustment of the Containment Spray System flow for corrosion protection and iodine removal enhancement is reduced in this condition. The Containment Spray System would still be available and would remove some iodine from the containment atmosphere in the event of a DBA. The 72 hour completion time takes into account the redundant flow path capabilities and the low probability of the worst case DBA occurring during this period.

~~Required~~ Action F.1 is modified by a Note which states that this ~~required~~ action is only ~~applicable~~ if CRFC unit A or C is ~~inoperable.~~ The loss of CRFC unit A or C results in the ~~associated~~ post-accident charcoal filter train being ~~inoperable since~~ the post-accident ~~charcoal filter~~ trains do not ~~have their~~ own fan assembly.

F ~~G~~.1 and F ~~G~~.2

If the Required Action and associated Completion Time of Condition D ~~F~~ of this LCO are not met, the plant must be brought to a MODE in which the LCO does not apply. To achieve this status, the plant must be brought to at least MODE 3 within 6 hours and to MODE 5 within 36 hours. The allowed Completion Times are reasonable, based on operating experience, to reach the required plant conditions from full power conditions in an orderly manner and without challenging plant systems.

F ~~H~~.1

With two CS trains inoperable, or ~~the NaOH System and one or both post-accident charcoal filter trains inoperable~~, three or more CRFC units inoperable, ~~or one CS and two post-accident charcoal filter trains inoperable,~~ the plant is in a condition outside the accident analysis. Therefore, LCO 3.0.3 must be entered immediately.

SURVEILLANCE REQUIREMENTS

SR 3.6.6.1

The applicable SR descriptions from Bases 3.5.2 apply. This SR is required since the OPERABILITY of valves 896A and 896B is also required for the CS System.

SR 3.6.6.2

Verifying the correct alignment for manual, power operated, and automatic valves in the CS flow path provides assurance that the proper flow paths will exist for CS System operation. This SR does not apply to valves that are locked, sealed, or otherwise secured in position, since these were verified to be in the correct position prior to locking, sealing, or securing. This SR does not require any testing or valve manipulation. Rather, it involves verification, through a system walkdown, that those valves outside containment (there are no valves inside containment) and capable of potentially being mispositioned are in the correct position.

SR 3.6.6.3

Verifying the correct alignment for manual, power operated, and automatic valves in the NaOH System flow path provides assurance that the proper flow paths will exist for NaOH System operation. This SR does not apply to valves that are locked, sealed, or otherwise secured in position, since these were verified to be in the correct position prior to locking, sealing, or securing. This SR does not require any testing or valve manipulation. Rather, it involves verification, through a system walkdown, that those valves outside containment (there are no valves inside containment) and capable of potentially being mispositioned are in the correct position.

SR 3.6.6.4

The A and C CRFC units must be operated with their respective charcoal filter train in the post-accident alignment

Operating each CRFC unit for ≥ 15 minutes once every 31 days ensures that all CRFC units are OPERABLE and that all associated controls are functioning properly. It also ensures that blockage, fan or motor failure, or excessive vibration can be detected for corrective action. The 31 day Frequency was developed considering the known reliability of the fan units and controls, the redundancy available, and the low probability of significant degradation of the CRFC units occurring between surveillances. It has also been shown to be acceptable through operating experience.

damper failures,

SR 3.6.6.5

Verifying cooling water (i.e., SW) flow to each CRFC unit provides assurance that the energy removal capability of the CRFC assumed in the accident analyses will be achieved (Ref. 11). The minimum and maximum SW flows are not required to be specifically determined by this SR due to the potential for a containment air temperature transient. Instead, this SR verifies that SW flow is available to each CRFC unit. The 31 day Frequency was developed considering the known reliability of the SW System, the two CRFC train redundancy available, and the low probability of a significant degradation of flow occurring between surveillances.

~~SR 3.6.6.6~~

~~Operating each post-accident charcoal filter train for ≥ 15 minutes once every 31 days ensures that all trains are OPERABLE and that all dampers are functioning properly. It also ensures that blockage can be detected for corrective action. The 31 day Frequency was developed considering the known reliability of the post-accident charcoal filter trains, the redundancy available, and the low probability of significant degradation of the train occurring between surveillances. It has also been shown to be acceptable through operating experience.~~

SR 3.6.6~~7~~

Verifying each CS pump's developed head at the flow test point is greater than or equal to the required developed head ensures that spray pump performance has not degraded during the cycle. Flow and differential pressure are normal tests of centrifugal pump performance required by Section XI of the ASME Code (Ref. 12). Since the CS pumps cannot be tested with flow through the spray headers, they are tested on recirculation flow. This test confirms one point on the pump design curve and is indicative of overall performance. Such inservice testing confirms component OPERABILITY, trends performance, and detects incipient failures by abnormal performance. The Frequency of the SR is in accordance with the Inservice Testing Program.

SR 3.6.6~~8~~

To provide effective iodine removal, the containment spray must be an alkaline solution. Since the RWST contents are normally acidic, the spray additive tank must provide a sufficient volume of spray additive to adjust pH for all water that is injected. This SR is performed to verify the availability of sufficient NaOH solution in the spray additive tank. The 184 day Frequency was developed based on the low probability of an undetected change in tank volume occurring during the SR interval since the tank is normally isolated. Tank level is also indicated and alarmed in the control room, so that there is high confidence that a substantial change in level would be detected.

SR 3.6.6~~9~~

This SR provides verification of the NaOH concentration in the spray additive tank and is sufficient to ensure that the spray solution being injected into containment is at the correct pH level. The 184 day Frequency is sufficient to ensure that the concentration level of NaOH in the spray additive tank remains within the established limits. This is based on the low likelihood of an uncontrolled change in concentration since the tank is normally isolated and the probability that any substantial variance in tank volume will be detected.

~~SR 3.6.6.10~~

~~This SR verifies that the required post-accident charcoal filter train testing is performed in accordance with the Ventilation Filter Testing Program (VFTP). The VFTP includes testing charcoal adsorber efficiency, minimum system flowrate, and the physical properties of the activated charcoal. The minimum required flowrate through each of the two post-accident charcoal filters is 33,000 cubic feet per minute at accident conditions (or 38,500 cubic feet per minute at normal operating conditions). Specific test frequencies and additional information are discussed in detail in the VFTP. However, the maximum surveillance interval for refueling outage tests is based on 24 month refueling cycles and not 18 month cycles as defined by Regulatory Guide 1.52 (Ref. 13).~~

SR 3.6.6.~~11~~ 9

This SR verifies that the required CRFC unit testing is performed in accordance with the VFTP. The VFTP includes testing HEPA filter performance. The minimum required flow rate through each of the four CRFC units is 33,000 cubic feet per minute at accident conditions (or 38,500 cubic feet per minute at normal operating conditions). Specific test frequencies and additional information are discussed in detail in the VFTP. However, the maximum surveillance interval for refueling outage tests is based on 24 month refueling cycles and not 18 month cycles as defined by Regulatory Guide 1.52 (Ref. 13).

SR 3.6.6.~~12~~ 10

These SRs require verification that each automatic CS valve in the flowpath (860A, 860B, 860C, and 860D) actuates to its correct position and that each CS pump starts upon receipt of an actual or simulated actuation of a containment High pressure signal. This surveillance is not required for valves that are locked, sealed, or otherwise secured in the required position under administrative controls. The 24 month Frequency is based on the need to perform these Surveillances under the conditions that apply during a plant outage and the potential for an unplanned transient if the Surveillances were performed with the reactor at power. Operating experience has shown that these components usually pass the Surveillances when performed at the 24 month Frequency. Therefore, the Frequency was concluded to be acceptable from a reliability standpoint.

SR 3.6.6.~~13~~ 11

See SR 3.6.6.~~12~~ 10

SR 3.6.6.~~14~~ 17

, and the charcoal filter trains associated with the A and C units,

This SR requires verification that each CRFC unit actuates upon receipt of an actual or simulated safety injection signal. The 24 month Frequency is based on engineering judgment and has been shown to be acceptable through operating experience. See SR 3.6.6.~~12~~ 10 and SR 3.6.6.~~13~~ 11, above, for further discussion of the basis for the 24 month Frequency.

~~SR 3.6.6.15~~

~~This SR requires verification every 24 months that each train of post-accident charcoal filters actuates upon receipt of an actual or simulated safety injection signal. The 24 month frequency is based on engineering judgement and has been shown to be acceptable through operating experience. See SR 3.6.6.12 and SR 3.6.6.13, above, for further discussion of the basis for the 24 month Frequency.~~

SR 3.6.6.~~16~~ 13

This SR provides verification that each automatic valve in the NaOH System flow path that is not locked, sealed, or otherwise secured in position (836A and 836B) actuates to its correct position upon receipt of an actual or simulated actuation of a containment Hi-Hi pressure signal. The 24 month frequency is based on engineering judgement and has been shown to be acceptable through operating experience. See SR 3.6.6.~~12~~ 10 and SR 3.6.6.~~13~~ 11, above, for further discussion of the basis for the 24 month Frequency.

SR 3.6.6.~~17~~ 14

To ensure that the correct pH level is established in the borated water solution provided by the CS System, flow through the eductor is verified once every 5 years. This SR in conjunction with SR 3.6.6.~~18~~ 13 provides assurance that NaOH will be added into the flow path upon CS initiation. A minimum flow of 20 gpm through the eductor must be established as assumed in the accident analyses. A flow path must also be verified from the NaOH tank to the eductors. Due to the passive nature of the spray additive flow controls, the 5 year Frequency is sufficient to identify component degradation that may affect flow injection.

SR 3.6.6.~~18~~ 15

With the CS inlet valves closed and the spray header drained of any solution, low pressure air or smoke can be blown through test connections. This SR ensures that each spray nozzle is unobstructed and provides assurance that spray coverage of the containment during an accident is not degraded. Due to the passive design of the nozzle, a test at 10 year intervals is considered adequate to detect obstruction of the nozzles.

REFERENCES

1. Atomic Industry Forum (AIF) GDC 49, 52, 58, 59, 60, and 61, issued for comment July 10, 1967.

2. Branch Technical Position MTEB 6-1, "pH For Emergency Coolant Water For PWRs."

3. Letter from D. M. Crutchfield, NRC, to J. E. Maier, RG&E, Subject: "SEP Topic VI-7.B: ESF Automatic Switchover from Injection to Recirculation Mode, Automatic ECCS Realignment, Ginna," dated December 31, 1981.

4. NUREG-0821.

5. UFSAR, Section 6.3.

6. UFSAR, Section 6.1.2.4.

7. 10 CFR 50, Appendix K.

8. UFSAR, Section 6.2.1.2.

9. UFSAR, Section 6.2.2.2.

10. UFSAR, Section 6.5.

11. UFSAR, Section 6.2.2.1.

12. ASME, Boiler and Pressure Vessel Code, Section XI.

13. Regulatory Guide 1.52, Revision 2.

14. Design Analysis DA-NS-2001-087, Large-Break LOCA Offsite and Control Room Doses, Rev 1

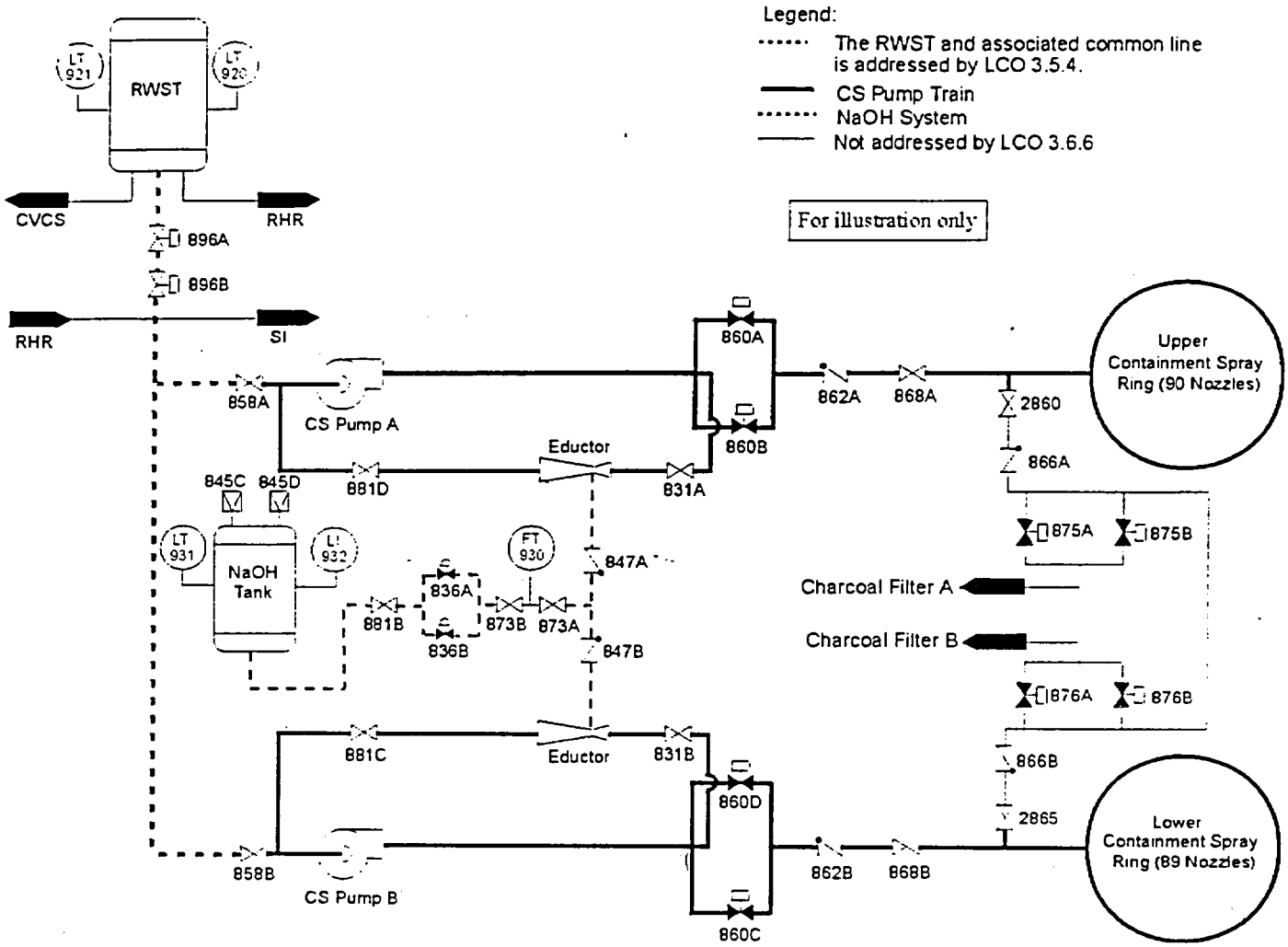

Figure B 3.6.6-1
Containment Spray and NaOH Systems

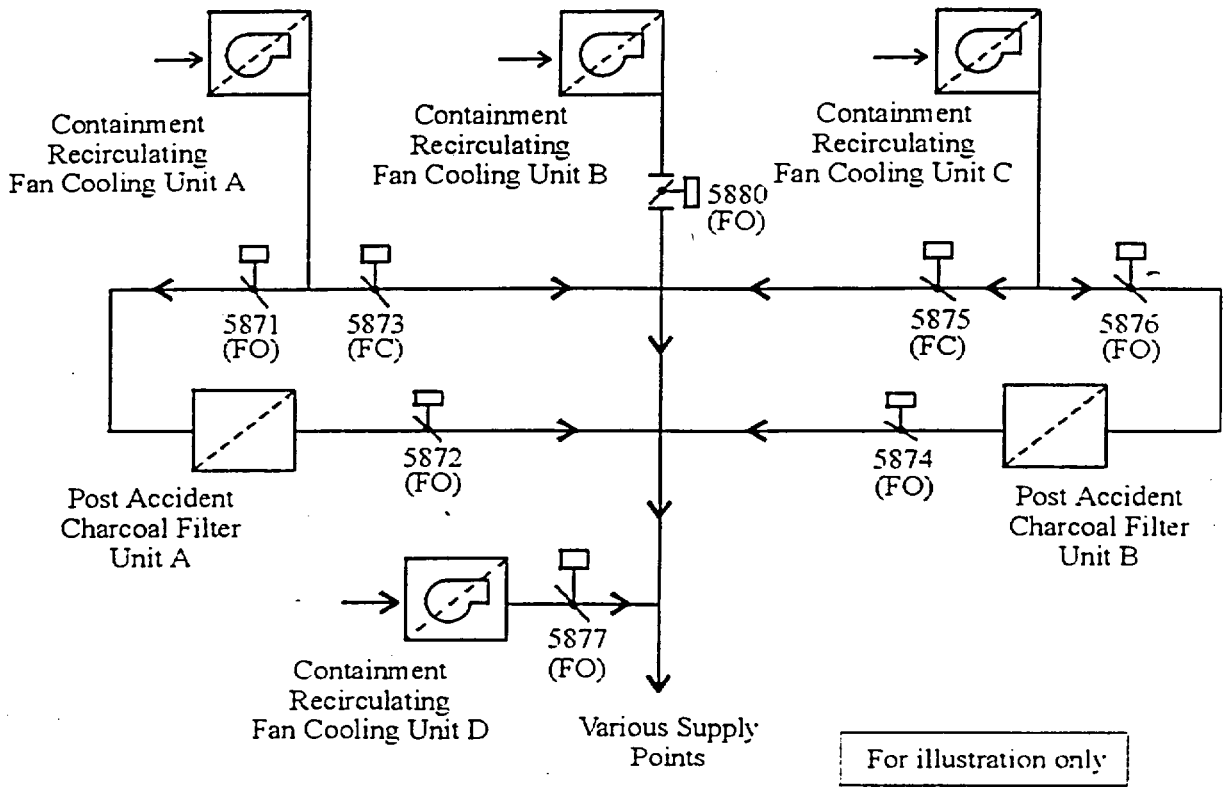

Notes:

1. Dampers 5871 and 5872 are associated with Post Accident Charcoal Filter Unit A
2. Dampers 5874 and 5876 are associated with Post Accident Charcoal Filter Unit B
3. Damper 5873 is assoicated with both CRFC Unit A and Post Accident Charcoal Filter Unit A
4. Damper 5875 is associated with both CRFC Unit C and Post Accident Charcoal Filter Unit B

Figure B 3.6.6-2
CRFC and Containment Post-Accident Charcoal Systems

B 3.7 PLANT SYSTEMS

B 3.7.9 Control Room Emergency Air Treatment System (CREATS)

BASES

BACKGROUND

According to Atomic Industry Forum (AIF) GDC 11 (Ref. 1), a control room shall be provided which permits continuous occupancy under any credible postaccident condition without excessive radiation exposures of personnel. Exposure limits are provided in GDC 19 of 10 CFR 50, Appendix A (Ref. 2) which requires that control room personnel be restricted to 5 rem whole body, or its equivalency, for the duration of the accident. The CREATS provides a protected environment from which operators can control the plant following an uncontrolled release of radioactivity for 30 days without exceeding this 5 rem whole body limit. The CREATS is part of the Control Building ventilation system.

Replace with attached

The CREATS consists of a high efficiency particulate air (HEPA) filter, activated charcoal adsorbers for removal of gaseous activity (principally iodines), and two fans (control room return air fan and emergency return air fan) (see Figure B 3.7.9-1). Ductwork, dampers, and instrumentation also form part of the system (Ref. 3).

The CREATS is an emergency system, parts of which may operate during normal plant operations. Actuation of the CREATS places the system in one of five separate states of the emergency mode of operation, depending on the initiation signal. The following are the normal and emergency modes of operation for the CREATS:

CREATS Mode A

The CREATS is in the standby mode with the exception that the control room return air fan is in operation.

CREATS Mode B

This is the CREATS configuration following an accident with a radiation release as detected by radiation monitor R-1. Upon receipt of an actuation signal, the control room emergency return air fan will actuate and system dampers align to recirculate a nominal 2000 cfm (approximately one fourth of the Control Building Ventilation System design) through the CREATS charcoal and HEPA filters. All outside air that enters the CREATS, as controlled by an air adjust switch (S-81), is also circulated through the CREATS charcoal and HEPA filters.

CREATS Mode C

This is the same CREATS configuration as Mode B with the exception that all outside air is isolated to the control room by one damper in each air supply flow path.

CREATS Mode D

This is the CREATS configuration following the detection of smoke within the Control Building. Upon receipt of an actuation signal, the system continues to draw outside air. However, the control room emergency return air fan will actuate and system dampers align to recirculate a nominal 2000 cfm through the CREATS and HEPA filters. This effectively purges the control room air environment.

CREATS Mode E

Replace with attached

This is the same CREATS configuration as Mode D with exception that all outside air is isolated to the control room by one damper in each air supply flow path.

CREATS Mode F

This is the CREATS configuration following the detection of a toxic gas as indicated by the chlorine or ammonia detectors, or high radiation as detected by R-36 (gas), R-37 (particulate), or R-38 (iodine). Upon receipt of an actuation signal, the system aligns itself consistent with Mode C except that two dampers in each air supply path are isolated.

Normally open air supply isolation dampers are arranged in series so that the failure of one damper to close will not result in a breach of isolation.

The air entering the control room is continuously monitored by radiation and toxic gas detectors. One detector output above the setpoint will cause actuation of the emergency radiation state or toxic gas isolation state, as required. The actions of the toxic gas and high radiation state (Mode F) are more restrictive, and will override the actions of the emergency radiation state (Mode B or C). Only the high radiation state CREATS Mode F is addressed by this LCO.

APPLICABLE SAFETY ANALYSES

The location of components and CREATS related ducting within the control room emergency zone envelope ensures an adequate supply of filtered air to all areas requiring access. The CREATS provides airborne radiological protection for the control room operators in MODES 1, 2, 3, and 4, as demonstrated by the control room accident dose analyses for the most limiting design basis loss of coolant accident and steam generator tube rupture (Ref. 3). This analysis shows that with credit for the CREATS, or with credit for instantaneous isolation of the control room coincident with the accident initiator and no CREATS filtration train available, the dose rates to control room personnel remain within GDC 19 limits.

During movement of irradiated fuel assemblies or during CORE ALTERATIONS, the CREATS ensures control room habitability in the event of a fuel handling accident. It has been demonstrated that the CREATS is not required in the event of a waste gas decay tank rupture (Ref. 5).

Replace with attached

The CREATS satisfies Criterion 3 of the NRC Policy Statement.

LCO

The CREATS is comprised of a filtration train and two independent and redundant isolation damper trains all of which are required to be OPERABLE. Total system failure could result in exceeding a dose of 5 rem to the control room operators in the event of a large radioactive release.

The CREATS is considered OPERABLE when the individual components necessary to permit CREATS Mode F operation are OPERABLE (see Figure B 3.7.9-1). The CREATS filtration train is OPERABLE when the associated:

a. Control room return air and emergency return air fans are OPERABLE and capable of providing forced flow;

b. HEPA filters and charcoal adsorbers for the emergency return air fan are not excessively restricting flow, and are capable of performing their filtration functions; and

c. Ductwork, valves, and dampers (including AKD06 and AKD09) are OPERABLE, and air circulation can be maintained.

The CREATS isolation dampers are considered OPERABLE when the damper (AKD01, AKD04, AKD05, AKD08, and AKD10) can close on an actuation signal to isolate outside air or is closed with motive force removed. Two dampers are provided for each outside air path.

In addition, the control room emergency zone boundary must be maintained, including the integrity of the walls, floors, ceilings, ductwork, and personnel access doors. The control room emergency zone boundary also includes the control room lavatory exhaust damper (AKD02), which closes on an actuation signal, and associated ductwork. Opening of the personnel access doors for entry and exit does not violate the control room emergency zone boundary. A personnel access door or a ventilation system ductwork access door may be opened for extended periods provided a dedicated individual is stationed at the access door to ensure closure, if required (i.e., the individual performs the isolation function), the door is able to be closed within 30 seconds upon indication of the need to close the door, and the CREATS filtration train is OPERABLE. The ventilation ductwork may also be opened for extended periods provided that the CREATS filtration train is declared inoperable, the fans are off, and the portion of ductwork that is open is isolated from the control room by a damper that is closed with motive force removed.

Replace with attached

APPLICABILITY

In MODES 1, 2, 3, and 4, the CREATS must be OPERABLE to control operator exposure during and following a DBA.

During movement of irradiated fuel assemblies or during CORE ALTERATIONS, the CREATS must be OPERABLE to cope with the release from a fuel handling accident.

ACTIONS

A.1 and A.2

With the CREATS filtration train inoperable, action must be taken to restore OPERABLE status within 48 hours or isolate the control room from outside air. In this Condition, the isolation dampers are adequate to perform the control room protection function but no means exist to filter the release of radioactive gas within the control room. The 48 hour Completion Time is based on the low probability of a DBA occurring during this time frame, and the ability of the CREATS dampers to isolate the control room.

Required Action A.2 is modified by a Note which allows the control room to be unisolated for ≤ 1 hour every 24 hours. This allows fresh air makeup to improve the working environment within the control room and is acceptable based on the low probability of a DBA occurring during this makeup period.

B.1

With one CREATS isolation damper inoperable for one or more outside air flow paths, action must be taken to restore OPERABLE status within 7 days. In this Condition, the remaining OPERABLE CREATS isolation damper is adequate to perform the control room protection function. However, the overall reliability is reduced because a single failure in the OPERABLE CREATS isolation damper could result in loss of CREATS function. The 7 day Completion Time is based on the low probability of a DBA occurring during this time period, and ability of the remaining isolation damper to provide the required isolation capability.

C.1 and C.2

In MODE 1, 2, 3, or 4, if the Required Actions of Conditions A or B cannot be completed within the required Completion Time, the plant must be placed in a MODE that minimizes accident risk. To achieve this status, the plant must be placed in at least MODE 3 within 6 hours, and in MODE 5 within 36 hours. The allowed Completion Times are reasonable, based on operating experience, to reach the required plant conditions from full power conditions in an orderly manner and without challenging plant systems.

Replace with attached

D.1 , D.2.1, and D.2.2

During movement of irradiated fuel assemblies or during CORE ALTERATIONS, if the Required Actions of Conditions A or B cannot be completed within the required Completion Time, action must be taken to immediately place the OPERABLE isolation damper(s) in CREATS Mode F. This action ensures that the remaining damper(s) are OPERABLE, that no failures preventing automatic actuation will occur, and that any active failure would be readily detected.

An alternative to Required Action D.1 is immediately suspend activities that could result in a release of radioactivity that might enter the control room. This requires the suspension of CORE ALTERATIONS and the suspension of movement of irradiated fuel assemblies. This places the plant in a condition that minimizes risk. This does not preclude the movement of fuel or other components to a safe position.

E.1

In MODE 1, 2, 3, or 4, if both CREATS isolation dampers for one or more outside air flow paths are inoperable, the CREATS may not be capable of performing the intended function and the plant is in a condition outside the accident analyses. Failure of the integrity of the control room emergency zone boundary (i.e., walls, floors, ceilings, ductwork, personnel access doors, or control room lavatory exhaust damper AKD02) also results in a condition outside the accident analyses. Therefore, LCO 3.0.3 must be entered immediately.

F.1 and F.2

During movement of irradiated fuel assemblies or during CORE ALTERATIONS with two CREATS isolation dampers for one or more outside air flow paths inoperable, action must be taken immediately to suspend activities that could result in a release of radioactivity that might enter the control room. This requires the suspension of CORE ALTERATIONS and the suspension of movement of irradiated fuel assemblies. This places the plant in a condition that minimizes accident risk. This does not preclude the movement of fuel or other components to a safe position.

SURVEILLANCE REQUIREMENTS

Replace with attached

SR 3.7.9.1

Standby systems should be checked periodically to ensure that they function properly. As the environment and normal operating conditions on this system are not too severe, testing each CREATS filtration train once every 31 days for ≥ 15 minutes provides an adequate check of this system. The 31 day Frequency is based on the reliability of the equipment.

SR 3.7.9.2

This SR verifies that the required CREATS testing is performed in accordance with the Ventilation Filter Testing Program (VFTP). The CREATS filter tests are in general accordance with Regulatory Guide 1.52 (Ref. 4). The VFTP includes testing the performance of the HEPA filter, charcoal adsorber efficiency, minimum flow rate, and the physical properties of the activated charcoal. The minimum required flowrate through the CREATS filtration train is 2000 cubic feet per minute (±10%). Specific test Frequencies and additional information are discussed in detail in the VFTP. However, the maximum surveillance interval for refueling outage tests is based on 24 month refueling cycles and not 18 month cycles as defined by Regulatory Guide 1.52 (Ref. 4).

SR 3.7.9.3

This SR verifies that the CREATS filtration train starts and operates and each CREATS isolation damper actuates on an actual or simulated actuation signal. The Frequency of 24 months is based on Regulatory Guide 1.52 (Ref. 4).

REFERENCES

1. Atomic Industry Forum (AIF) GDC 11, Issued for comment July 10, 1967.

2. 10 CFR 50, Appendix A, GDC 19.

3. UFSAR, Section 6.4.

4. Regulatory Guide 1.52, Revision 2.

5. Letter from Robert C. Mecredy, RG&E, to Guy S. Vissing, NRC, Subject: Application for Amendment to Facility Operating License Control Room Emergency Air Treatment System (CREATS) Applicability Change (LCO 3.3.6 and LCO 3.7.9), dated July 21, 2000.

Replace with attached

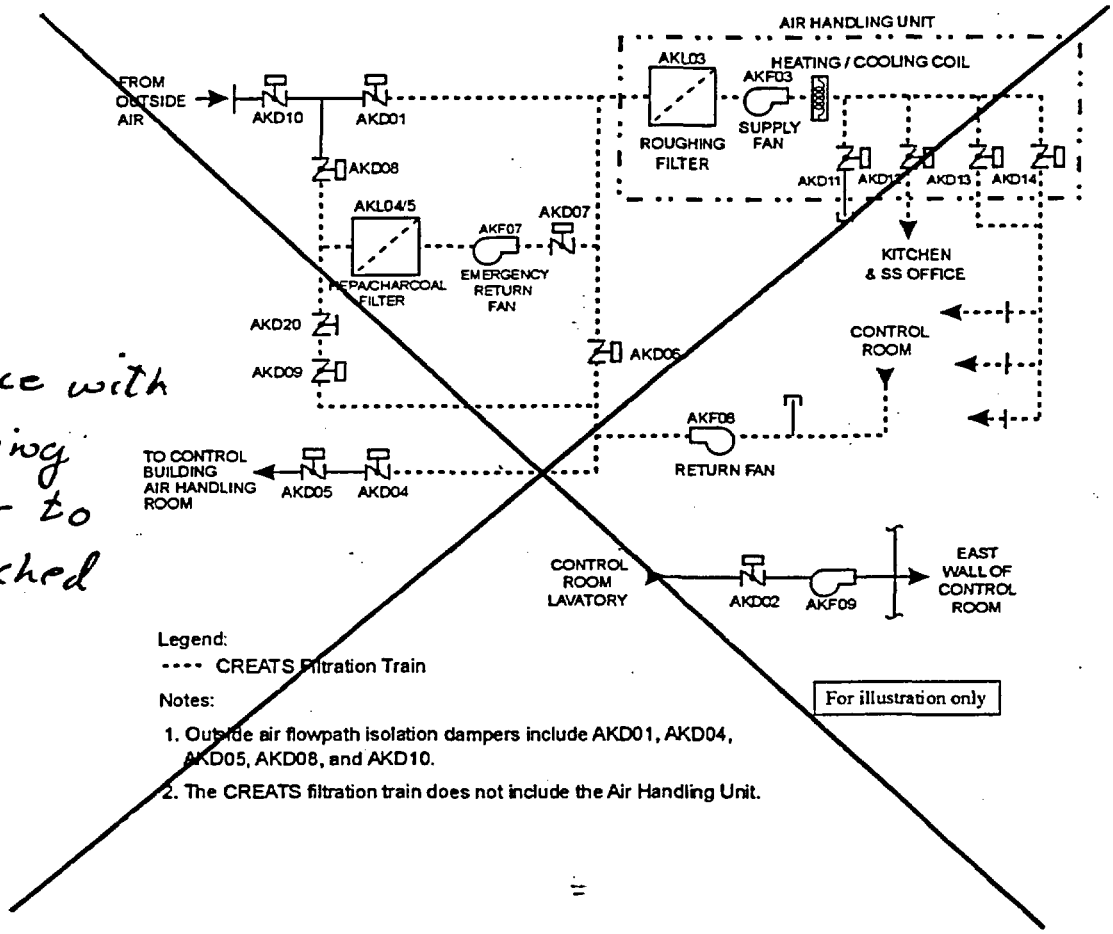

Replace with drawing similar to attached

Figure B 3.7.9-1
CREATS

B 3.7 PLANT SYSTEMS

B 3.7.~~10~~ 9 Control Room Emergency Air Treatment System (CREATS) ~~Filtration System (CREFS)~~

BASES

BACKGROUND

The CREATS ~~CREFS~~ provides a protected environment from which operators can control the unit following an uncontrolled release of radioactivity, chemicals, or toxic gas.

(See Figure B3.7.9-1)

The CREATS ~~CREFS~~ consists of two independent, redundant trains that recirculate and filter the control room air. Each train consists of a prefilter ~~or demister~~, a high efficiency particulate air (HEPA) filter, an activated charcoal adsorber section for removal of gaseous activity (principally iodines), and a fan. Ductwork, valves or dampers, and instrumentation also form part of the system~~, as well as demisters to remove water droplets from the air stream~~. A second bank of HEPA filters follows the adsorber section to collect carbon fines and provide backup in case of failure of the main HEPA filter bank.

The CREATS ~~CREFS~~ is an emergency system~~, parts of which may also operate during normal unit operations in the standby mode of operation~~. Upon receipt of the actuating signal(s), normal HVAC ~~air supply~~ to the control room is isolated, and the stream of ventilation air is recirculated through the system filter trains. The prefilters ~~or demisters~~ remove any large particles in the air~~, and any entrained water droplets present~~, to prevent excessive loading of the HEPA filters and charcoal adsorbers. ~~Continuous operation of each train for at least 10 hours per month, with the heaters on, reduces moisture buildup on the HEPA filters and adsorbers. Both the demister and heater are important to the effectiveness of the charcoal adsorbers.~~

Actuation of the CREATS ~~CREFS~~ places the system in ~~either of two separate states (emergency radiation state or toxic gas isolation state) of~~ the emergency mode of operation~~, depending on the initiation signal.~~ Actuation of the system to the ~~emergency radiation state of the~~ emergency mode of operation~~, closes the unfiltered outside air intake and unfiltered exhaust dampers,~~ and aligns the system for recirculation of the control room air through the redundant trains of HEPA and the charcoal filters. ~~The emergency radiation state also initiates pressurization and filtered ventilation of the air supply to the control room.~~

(isolates the normal HVAC components from the Control Room Emergency Zone (CREZ))

~~Outside air is filtered, diluted with building air from the electrical equipment and cable spreading rooms, and added to the air being recirculated from the control room. Pressurization of the control room prevents infiltration of unfiltered air from the surrounding areas of the~~

BASES

BACKGROUND (continued)

~~building. The actions taken in the toxic gas isolation state are the same, except that the signal switches control room ventilation to an isolation alignment to prevent outside air from entering the control room.~~

The air entering the control room is continuously monitored by radiation and toxic gas detectors. One detector output above the setpoint or an SI signal will cause actuation of the emergency ~~radiation state or toxic gas isolation state, as required. The actions of the toxic gas isolation state are more restrictive, and will override the actions of the emergency radiation state.~~ Mode.

~~A single train will pressurize the control room to about [0.125] inches water gauge.~~ The ~~CREFS~~ CREATS operation in maintaining the control room habitable is discussed in the FSAR, Section ~~6.4~~ (Ref. 1).

Redundant ~~supply and~~ recirculation trains provide the required filtration should an excessive pressure drop develop across the other filter train. Normally open isolation dampers are arranged in series pairs so that the failure of one damper to shut will not result in a breach of isolation. ~~The CREFS is designed in accordance with Seismic Category I requirements.~~

The ~~CREFS~~ CREATS is designed to maintain the control room environment for 30 days of continuous occupancy after a Design Basis Accident (DBA) without exceeding a 5 rem ~~whole body dose or its equivalent to any part of the body~~ total effective dose equivalent (TEDE).

APPLICABLE SAFETY ANALYSES

The ~~CREFS~~ CREATS components are arranged in redundant, safety related ventilation trains, ~~The location of components and ducting within the control room envelope~~ that ensures an adequate supply of filtered air to all areas requiring access. The ~~CREFS~~ CREATS provides airborne radiological protection for the control room operators, as demonstrated by the control room accident dose analyses for the ~~most limiting~~ design basis ~~loss of coolant accident,~~ fission product release presented in the FSAR, ~~Chapter [15]~~ (Ref. 2).

~~The analysis of toxic gas releases demonstrates that the toxicity limits are not exceeded in the control room following a toxic chemical release, as presented in Reference 1.~~

The worst case single active failure of a component of the ~~CREFS,~~ CREATS, assuming a loss of offsite power, does not impair the ability of the system to perform its design function.

It has been demonstrated that the CREATS is not required in the event of a waste gas decay tank rupture (Ref. 4)

BASES

APPLICABLE SAFETY ANALYSES (continued)

The ~~CREFS~~ CREATS satisfies Criterion 3 of 10 CFR 50.36(c)(2)(ii).

LCO

Two independent and redundant ~~CREFS~~ CREATS trains are required to be OPERABLE to ensure that at least one is available assuming a single failure disables the other train. Total system failure could result in exceeding a dose of 5 rem TEDE to the control room operator in the event of a large radioactive release.

The ~~CREFS~~ CREATS is considered OPERABLE when the individual components necessary to limit operator exposure are OPERABLE in both trains. A ~~CREFS~~ CREATS train is OPERABLE when the associated:

(see Figure B3.7.9-1)

a. Fan is OPERABLE,

b. HEPA filters and charcoal adsorbers are not excessively restricting flow, and are capable of performing their filtration functions, and

c. ~~Heater, demister,~~ ductwork, valves, and dampers are OPERABLE, and air circulation can be maintained.

Dampers AKD03, AKD21, and AKD23 are associated with the A Train. Dampers AKD02, AKD22 and AKD24 are associated with the B Train

(i.e., emergency zone)

In addition, the control room boundary must be maintained, including the integrity of the walls, floors, ceilings, ductwork, and access doors.

The LCO is modified by a Note allowing the control room boundary to be opened intermittently under administrative controls. For entry and exit through doors, the administrative control of the opening is performed by the person(s) entering or exiting the area. For other openings (hatches, access panels, floor plugs, etc.), these controls consist of stationing a dedicated individual at the opening who is in continuous communication with the control room. This individual will have a method to rapidly close the opening (within 60 seconds) when a need for control room isolation is indicated and restore the control room boundary to the design condition.

APPLICABILITY

If the above conditions for utilizing the LCO Note cannot be met, Condition B should be entered

In MODES 1, 2, 3, 4, ~~[5, and 6,]~~ and during movement of ~~[recently]~~ irradiated fuel assemblies, ~~CREFS~~ CREATS must be OPERABLE to control operator exposure during and following a DBA.

~~In [MODE 5 or 6], the CREFS is required to cope with the release from the rupture of an outside waste gas tank.~~

During movement of ~~[recently]~~ irradiated fuel assemblies, the ~~CREFS~~ CREATS must be OPERABLE to cope with the release from a fuel handling accident ~~[involving handling recently irradiated fuel]. [The CREFS is only~~

Measured inleakage must also be maintained such that operator exposure limits are not exceeded

BASES

APPLICABILITY (continued)

~~required to be OPERABLE during fuel handling involving handling recently irradiated fuel (i.e., fuel that has occupied part of a critical reactor core within the previous [ ] days), due to radioactive decay.]~~

ACTIONS

A.1

When one ~~CREFS~~ CREATS train is inoperable, action must be taken to restore OPERABLE status within 7 days. In this Condition, the remaining OPERABLE ~~CREFS~~ CREATS train is adequate to perform the control room protection function. However, the overall reliability is reduced because a single failure in the OPERABLE ~~CREFS~~ CREATS train could result in loss of ~~CREFS~~ CREATS function. The 7 day Completion Time is based on the low probability of a DBA occurring during this time period, and ability of the remaining train to provide the required capability.

B.1 and B.2

~~- REVIEWER'S NOTE -~~

~~Adoption of Condition B is dependent on a commitment from the licensee to have written procedures available describing compensatory measures to be taken in the event of an intentional or unintentional entry into Condition B.~~

inleakage could exceed that assumed in the various analysis

If the control room boundary is inoperable ~~in MODE 1, 2, 3, or 4, the CREFS trains cannot perform their intended functions~~. Actions must be taken to restore ~~an OPERABLE~~ control room boundary to OPERABLE status within ~~24 hours.~~ 14 days. During the period that the control room boundary is inoperable, appropriate compensatory measures (consistent with the intent of GDC 19) ~~should~~ must be utilized to protect control room operators from potential hazards such as radioactive contamination, toxic chemicals, smoke, temperature and relative humidity, and physical security. Preplanned measures should be available to address these concerns for intentional and unintentional entry into the condition. The ~~24 hour~~ 14 day Completion Time is reasonable based on the low probability of a DBA or FHA occurring during this time period, and the use of compensatory measures. The ~~24 hour~~ 14 day Completion time is a typically reasonable time to diagnose, plan and ~~possibly~~ repair, and test most problems with the control room boundary.

Insert C.1 attached

C.1

Condition C applies when the Required Actions and associated Completion Times for Condition B are not met. This Required Action specifies initiation of actions in Specification 5.6.~~10~~9, which requires a written report to be submitted to the NRC. This report discusses the preplanned compensatory measures, the cause of the inoperability, and plans and schedule for restoring the control room boundary to OPERABLE status. Consistent with LCO 3.0.2, if the control room boundary is restored to OPERABLE status before the report is due, the report is not required to be submitted. This action is appropriate in lieu of a shutdown requirement since alternative actions are identified which may preclude the loss of functional capability, and given the likelihood of ~~unit~~ plant conditions that would require the control room boundary to be OPERABLE.

BASES

ACTIONS (continued)

~~C~~ D.1 and ~~C~~ D.2

In MODE 1, 2, 3, or 4, if the inoperable ~~CREFS~~ CREATS train or ~~control room boundary~~ cannot be restored to OPERABLE status within the required Completion Time, the ~~unit~~ plant must be placed in a MODE that minimizes accident risk. To achieve this status, the ~~unit~~ plant must be placed in at least MODE 3 within 6 hours, and in MODE 5 within 36 hours. The allowed Completion Times are reasonable, based on operating experience, to reach the required ~~unit~~ plant conditions from full power conditions in an orderly manner and without challenging ~~unit~~ plant systems.

~~D~~ E.1 and ~~D~~ E.2

~~[In MODE 5 or 6, or]~~ During movement of ~~[recently]~~ irradiated fuel assemblies, if the inoperable ~~CREFS~~ CREATS train cannot be restored to OPERABLE status within the required Completion Time, action must be taken to immediately place the OPERABLE ~~CREFS~~ CREATS train in the emergency mode. This action ensures that the remaining train is OPERABLE, that no failures preventing automatic actuation will occur, and that any active failure would be readily detected.

An alternative to Required Action ~~D~~ E.1 is to immediately suspend activities that could result in a release of radioactivity that might require isolation of the control room. This places the ~~unit~~ plant in a condition that minimizes risk. This does not preclude the movement of fuel to a safe position.

~~Required Action D.1 is modified by a Note indicating to place the system in the toxic gas protection mode if automatic transfer to toxic gas protection mode is inoperable.~~

~~E~~ F.1

CREATS

~~[In MODE 5 or 6, or]~~ During movement of ~~[recently]~~ irradiated fuel assemblies, with two ~~CREFS~~ trains inoperable, action must be taken immediately to suspend activities that could result in a release of radioactivity that might enter the control room. This places the ~~unit~~ plant in a condition that minimizes accident risk. This does not preclude the movement of fuel to a safe position.

~~F~~ G.1

If both ~~CREFS~~ CREATS trains are inoperable in MODE 1, 2, 3, or 4 ~~for reasons other than an inoperable control room boundary (i.e., Condition B)~~, the

BASES

ACTIONS (continued)

CREATS ~~CREFS~~ may not be capable of performing the intended function and the plant ~~unit~~ is in a condition outside the accident analyses. Therefore, LCO 3.0.3 must be entered immediately.

SURVEILLANCE REQUIREMENTS

SR 3.7.9~~10~~.1

Standby systems should be checked periodically to ensure that they function properly. As the environment and normal operating conditions on this system are not too severe, testing each train once every month provides an adequate check of this system. ~~Monthly heater operations dry out any moisture accumulated in the charcoal from humidity in the ambient air. [Systems with heaters must be operated for ≥ 10 continuous hours with the heaters energized. Systems without heaters need only be~~ operated for ≥ 15 minutes to demonstrate the function. ~~of the system.]~~ The system is The 31 day Frequency is based on the reliability of the equipment and the two train redundancy availability.

SR 3.7.9~~10~~.2

This SR verifies that the required CREATS ~~CREFS~~ testing is performed in accordance with the {Ventilation Filter Testing Program (VFTP)}. The {VFTP} includes testing the performance of the HEPA filter, charcoal adsorber efficiency, minimum flow rate, and the physical properties of the activated charcoal. ~~Specific test Frequencies and additional information are discussed in detail in the {VFTP}.~~

The maximum surveillance interval for refueling outage tests is based on 24 month refueling cycles and not 18 month cycles as defined by Reg. Guide 1.52 (Ref 3)

SR 3.7.9~~10~~.3

This SR verifies that each CREATS ~~CREFS~~ train starts and operates on an actual or simulated actuation signal. The Frequency of [~~18~~ 24] months is specified in Regulatory Guide 1.52 (Ref. 3).

~~SR 3.7.10.4~~

~~This SR verifies the integrity of the control room enclosure, and the assumed inleakage rates of the potentially contaminated air. The control room positive pressure, with respect to potentially contaminated adjacent areas, is periodically tested to verify proper functioning of the CREFS. During the emergency mode of operation, the CREFS is designed to pressurize the control room ≥ [0.125] inches water gauge positive pressure with respect to adjacent areas in order to prevent unfiltered inleakage. The CREFS is designed to maintain this positive pressure with one train at a makeup flow rate of [3000] cfm. The~~

BASES

SURVEILLANCE REQUIREMENTS (continued)

~~Frequency of [18] months on a STAGGERED TEST BASIS is consistent with the guidance provided in NUREG-0800 (Ref. 4).~~

REFERENCES

1. UFSAR, Section ~~1~~6.4~~2~~
2. UFSAR, Chapter ~~1~~15~~2~~
3. Regulatory Guide 1.52, Rev. ~~1~~2~~2~~
4. ~~NUREG-0800, Section 6.4, Rev. 2, July 1981.~~

SR 3.7.~~10.5~~ 9.4

This SR verifies the habitability of the control room envelope by requiring testing and protective measures in accordance with the Control Room Integrity Program. It addresses both radiological and toxic chemical hazards from sources external to the control room.

~~5~~ 4. Letter from Robert C. Mecredy, RG&E, to Guy S. Vissing, NRC, Subject: Application for Amendment to Facility Operating License Control Room Emergency Air Treatment System (CREATS) Applicability Change (LCO 3.3.6 and LCO 3.7.9), dated July 21, 2000.

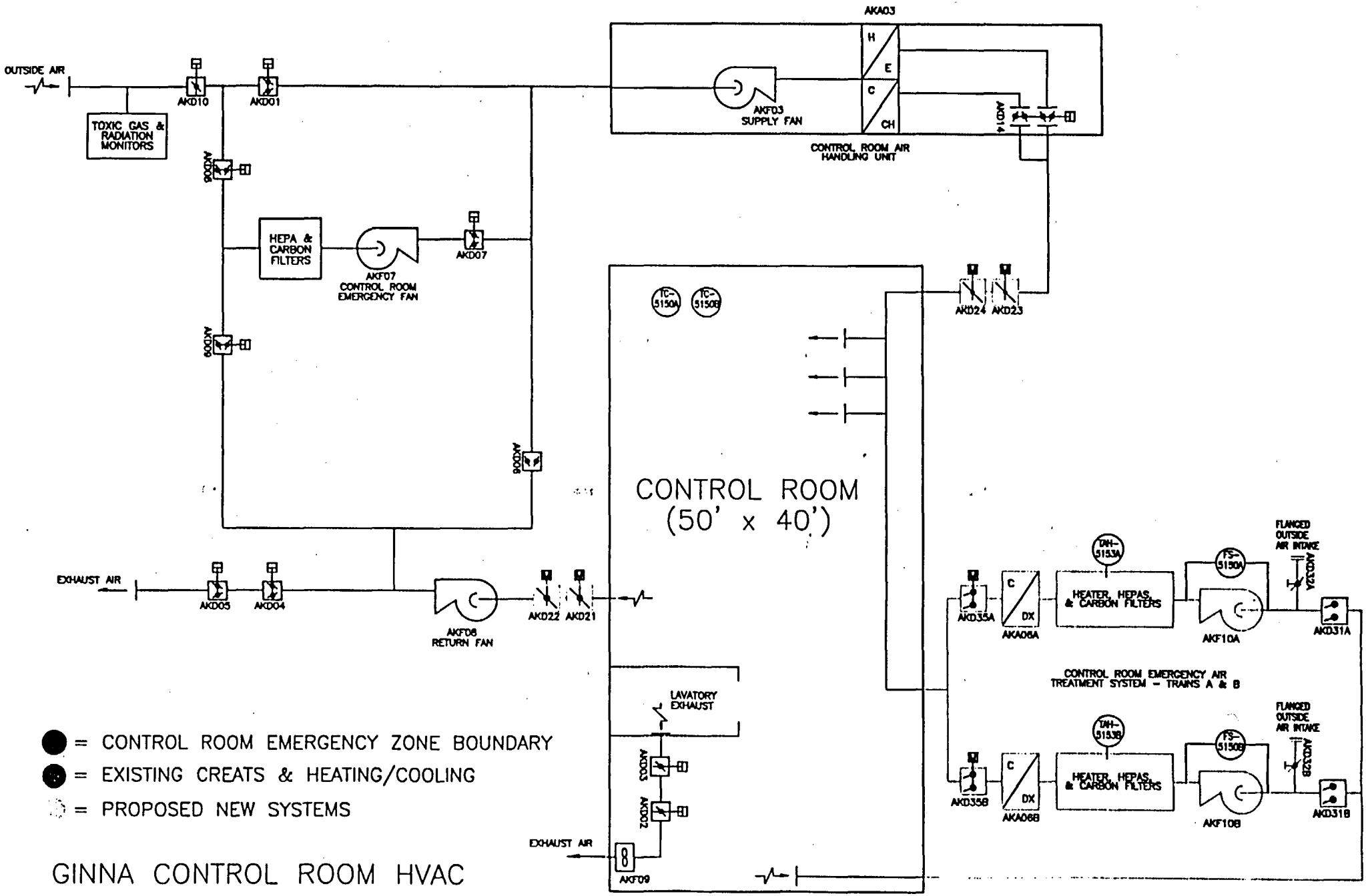

● = CONTROL ROOM EMERGENCY ZONE BOUNDARY

● = EXISTING CREATS & HEATING/COOLING

⬡ = PROPOSED NEW SYSTEMS

GINNA CONTROL ROOM HVAC

Attachment 7

Design Criteria for new CREATS System

D0907596

Design Criteria

Ginna Station

Control Room Emergency Air Treatment System (CREATS)
and Control Room Emergency Cooling System (CRECS)

Rochester Gas and Electric Corporation

89 East Avenue

Rochester, New York 14649

PCR # 2000-0024

Rev. 0

Date 7/11/01

Prepared by Daniel J. Crowley — Assigned Engineer — 7/3/01 Date

Reviewed by R T Davis — Quality Assurance — 7/6/01 Date

Approved by Peter Bamford — Engineering Manager — 7/11/01 Date

pg 1 of 18

REVISION CONTROL

Revision Number	Affected Sections	Description of Revision and Reason for Change
0	All pages, including attachments A & B	Original Issue

1.0 Modification Description & Scope

1.1 Reasons:

Modification of the Control Room HVAC system will occur for the following reasons:

A) Industry experience with tracer gas testing to validate Control Room inleakage assumptions indicates a need to reduce the potential for unfiltered air inleakage to the Control Room.

B) The existing single train of Control Room HVAC severely limits the amount of on-line maintenance & repair that can be performed.

C) The existing single train relies upon the Non-Safety Related chilled water and instrument air systems, and is susceptible to single failure (loss of 'A' train power). A redundant, 1E powered system is desired to ensure that the Control Room remains habitable during recovery from a Design Basis Accident.

D) Potential implementation of unit power uprate and longer fuel cycles will require additional margin between existing predicted doses and the dose limits of GDC 19.

1.2 Description

The modification will install two new trains of Safety Related, Seismic Class I Control Room Emergency Air Treatment System (CREATS) and Control Room Emergency Cooling System (CRECS) in the Relay Room Annex. These systems will normally be in standby and the existing Control Room HVAC system will continue to provide heating, cooling, & ventilation in normal modes of operation. Upon an accident signal the new CREATS and CRECS will actuate, the normal HVAC system fans will trip, and Control Room Emergency Zone (CREZ) isolation dampers will isolate the normal HVAC system from the CREZ. The modification will also enhance the boundaries of the Control Room Emergency Zone (CREZ) to ensure conformance with inleakage assumptions that affect the predicted radiological dose and toxic gas exposure under various accident conditions.

1.3 Scope

The scope of this project includes the following:

1.3.1 Install new CREATS & CRECS systems in the Relay Room Annex

1.3.2 Provide 1E power and controls for the new CREATS & CRECS systems.

1.3.3 Install new supply and return ductwork between the Control Room and the new CREATS & CRECS system located in the Relay Room Annex

1.3.4 Install new supply and return air ductwork above the suspended ceiling in the Control Room.

1.3.5 Replace the outside air duct located above the ceiling in the Control Room.

1.3.6 Install an additional isolation damper in the Control Room lavatory exhaust duct, and install four new isolation dampers in the existing supply & return air ducts located in the Control Building stairwell.

1.3.7 Modify ductwork to route exhaust air from the Control Room to a location outside of the Control Building (it is currently discharged into the Control Building Air Handling Room).

1.3.8 Modify controls for the existing Control Room HVAC system.

1.4 Implementation

Scope section 1.3.1 will be awarded as a "turn-key" contract for a vendor to design, fabricate, furnish, install, and field test the new CREATS & CRECS systems in the Relay Room Annex. All other scope items in section 1.3 will be designed, installed, and tested by RG&E.

1.5 System / Component Functions

1.5.1 SAFETY RELATED FUNCTIONS

The new systems include or affect components that support the following SC-3 functions:

Rule 3.1.3.11 Provide actuation or motive power for SC-1, SC-2, or SC-3 components

Rule 3.1.3.12 Provide information or controls to ensure capability for manual or automatic actuation of nuclear safety functions required of SC-1, SC-2, or SC-3 components.

Rule 3.1.3.13 Supply or process signals or supply power required for SC-1, SC-2, or SC-3 components to perform their required nuclear safety functions.

Rule 3.1.3.14 Provide a manual or automatic interlock function to ensure or maintain proper performance of nuclear safety functions required of SC-1, SC-2, or SC-3 components.

Rule 3.1.3.15 Provide emergency ventilation and cooling to ensure proper performance of nuclear Safety functions required of SC-1, SC-2, or SC-3 components.

A new rule safety related rule (tentatively identified as 3.1.3.22) is planned to be added to the Q-list and will represent the following function:

Rule 3.1.3.22 Maintain control room temperature and radiation levels conducive to continuous occupancy during any normal or accident conditions.

1.5.1.1 The heating coils installed within CREATS shall maintain the Control Room above the UFSAR minimum temperature of 50°F to support human habitability and equipment operation, under the new rule 3.1.3.22.

1.5.1.2 The CRECS system shall maintain the Control Room below the UFSAR minimum temperature of 104°F to support human habitability and equipment operation, under the new rule 3.1.3.22. The system will be designed to maintain the Control Room at a comfortable temperature for operators, approximately 70 -74°F. Because most instruments and controls in the Control Room are rated for service up to 120°F; CRECS is not required for equipment concerns under SC-3 rule 3.1.3.15.

1.5.1.3 CREATS isolation dampers shall isolate the Control Room for radioactive gas or toxic (chlorine & ammonia) release accident scenarios in order to limit Control Room operators' exposure to these airborne contaminants, under the new rule 3.1.3.22. Isolation will be provided by dampers AKD02, AKD03, AKD21, AKD22, AKD23, & AKD24.

1.5.1.3.1 Radioactive gas monitors providing the CREATS isolation signal are Safety Related. Toxic gas monitors providing the CREATS isolation signal are Safety Significant.

1.5.1.4 The pressure boundary function of new CREATS ductwork and other components (damper, filter, fan, & instrument housings) is safety related under the new rule 3.1.3.22.

1.5.1.5 The CREATS system shall filter the recirculated Control Room air during accident conditions so that radiation exposure to the control room personnel does not exceed limits of GDC 19, under the new rule 3.1.3.22.

1.5.2 SAFETY SIGNIFICANT FUNCTIONS

The new systems include or affect components that support the following Safety Significant (SS) functions:

Rule 3.1.4.2 Fire detection, suppression, principal barriers and mitigation systems and components used to protect safety related or safe shutdown equipment (see RG&E Ginna Station QA Manual Appendix D for Quality requirements)

Rule 3.1.4.13 Maintain an atmosphere in the main control room conducive to continuous occupancy during any mode of normal operation or event.

The current rule 3.1.4.13 shown above is planned to be revised as follows:

Rule 3.1.4.13 Maintain ~~an atmosphere in the main~~ control room atmosphere conducive to continuous occupancy during ~~any mode of~~ normal plant operation ~~or event~~ and following the postulated chlorine or ammonia spills.

1.5.2.1 The existing Control Room HVAC system will remain in place to provide heating & cooling of the CREZ during normal (unisolated) modes of operation, under the revised safety significant rule 3.1.4.13. The pressure boundary function of the existing Control room HVAC system ductwork and other components (damper, filter, fan, & instrument housings) up to, but not including, new isolation dampers AKD21, AKD22, AKD23, & AKD24 will be safety significant under the revised rule 3.1.4.13.

1.5.2.2 The new CREATS system shall include fire protection features to prevent, identify, and mitigate fire so that the spread of smoke and fire is restricted in accordance with fire protection requirements. These functions will be Safety Significant under rule 3.1.4.2. The existing Control Room HVAC system includes fire protection features that will remain Safety Significant under the same rule.

1.5.2.3 The CREATS system shall limit airborne toxic chemicals entering the control room during events and normal conditions to ensure that the toxic chemical exposure to the control room personnel does not exceed acceptable limits to support human habitably in accordance with NUREG 0737, Item III.D3. Toxic gas monitors providing the CREATS isolation signal are Safety Significant under the revised rule 3.1.4.13.

1.5.2.4 The existing Control Room HVAC system will provide a purge mode of operation in which a maximum amount of fresh air is supplied to the Control Room, while an equal amount is exhausted from the Control Room. This function is designed to purge smoke or other toxins from the Control Room, and supports rule 3.1.4.2

1.5.3 NON-SAFETY RELATED FUNCTIONS

1.5.3.1 The existing 2000 CFM CREATS fan & filters (AKF07 & AKP01) will no longer have a Safety Related function and may be removed or abandoned in place.

1.5.3.2 The CRECS system will reduce Control Room humidity when it's cooling coil temperature is low enough to condense moisture from the airstream. However, there will be no humidity controls for the system; the cooling function of CRECS will be controlled by Control Room thermostat(s) only, and the function of reducing humidity will be Non-Safety Related.

1.6 MODES OF OPERATION

1.6.1 NORMAL

The existing CR HVAC system will provide heating, cooling, and fresh air to the Control Room.

1.6.2 ACCIDENT

The Control Room HVAC will be isolated and both new 100% capacity trains of CREATS will filter and recirculate 6000 CFM (±10%) of Control Room air. ACCIDENT mode shall be initiated by radiation monitors, toxic gas monitors, Safety Injection (SI), or manual actuation in the Control Room. The new trains of CREATS will not have a pressurized mode of operation, but a pressurized mode may be provided in the future. The existing CREATS filter and fan (AKF07 & AKP01) will be disconnected and may be removed or abandoned in place.

1.6.3 EMERGENCY COOLING

Two new 100% capacity Control Room Emergency Cooling Systems (CRECS) will automatically cool the Control Room, as needed, whenever the CREATS system is in operation. CRECS shall be 1E powered, and shall strip upon SI.

1.6.4 PURGE

The existing Control Room HVAC system will have a purge mode of operation in which the maximum amount of fresh air and exhaust air is provided. This mode will be over-ridden by an ACCIDENT signal but, with local operator action, a purge flow can also be established from an alternate source (Relay Room Annex) while in the ACCIDENT mode of operation.

2.0 Performance Requirements

2.1 The CREATS system shall recirculate 6000 (+/- 10%) CFM of filtered air through the Control Room.

2.2 The new CREATS carbon filters shall assure a minimum 1/4 second residence time while filtering 6600 CFM (nominal 6000 CFM flow + 10% measurement uncertainty).

2.2.1 The CREATS carbon filter shall be equipped with a minimum of 10 individual sample canisters or a suitably equivalent method for obtaining representative samples of carbon for laboratory testing.

2.3 CREZ isolation dampers AKD02, AKD03, AKD21, AKD22, AKD23, & AKD24 shall close in response to an isolation signal from radiation monitors, toxic gas monitors, SI, or manual actuation. Time elapsed from presence of contaminant at the detector to closure of the dampers shall be less than that allowed in the most limiting Control Room dose calculation.

2.3.1 CREZ boundary leakage, including leakage through isolation dampers, ductwork, and structural barriers, shall be minimized. Control Room dose calculations assume that only 300 CFM of unfiltered air leaks into the Control Room.

2.4 Time elapsed from initiation of the signal to start of the CREATS fans shall be less than that allowed in the most limiting Control Room dose calculation.

2.5 In the normal mode of operation outside air flow into the Control Room shall be between 350 and 2000 CFM (reference 3.33). The 2000 CFM upper limit affects transport time, damper isolation time requirements, and assumptions in the Control Room dose calculations.

2.6 In all modes of operation the heating and cooling shall be controlled automatically by a thermostat.

2.6.1 Each train of CREATS shall include heaters of minimum 18.6 KW capacity. This capacity will maintain the Control Room at approximately 72°F assuming 2°F outside air, internal heat gains, and 300 CFM of outside air entering the Control Room (reference 3.34).

2.6.2 The CRECS shall have the cooling capacity required with outdoor ambient conditions of 89°F DB & 73°F WB(reference 3.30), indoor conditions of 72°F & 50% RH, and 300 CFM of unfiltered & unconditioned outside air brought into the Control Room.

3.0 Codes, Standards and Regulatory Requirements

The following codes and standards are either partially or in whole applicable to this modification. Refer to the appropriate section of the design criteria to determine the extent of the standard application.

3.1 USNRC Regulatory Guide 1.29, "Seismic Design Classification"

3.2 USNRC Regulatory Guide 1.52, "Design, Testing, and Maintenance Criteria for Post Accident Engineered-Safety-Feature Atmosphere Cleanup System Air Filtration and Adsorption Units of Light-Water-Cooled Nuclear Power Plants"

3.3 USNRC Regulatory Guide 1.140, "Design, Testing, and Maintenance Criteria for Normal Ventilation Exhaust System Air Filtration and Adsorption Units of Light-Water-Cooled Nuclear Power Plants"

3.4 "SMACNA, Sheet Metal and Air Conditioning Contractors' National Association, Inc. for Ductwork Design and System Balancing"

3.5 ANSI/AWS D1.1, latest edition, "Structural Welding Code"

3.6 ANSI N45.2.2, "Packaging, Shipping, Receiving, Storage and Handling of Items for Nuclear Power Plants"

3.7 AISC, "Specification for the Design, Fabrication, and Erection of Structural Steel for Buildings", 8th edition.

3.8 IEEE 323, "Standard for Qualifying Class 1E Equipment for Nuclear Power Generating Stations"

3.9 IEEE 344, "Seismic Qualification of Class 1E Electric Equipment for Nuclear Power Generating Equipment"

3.10 UL-900, "Standard for Safety of Air Filter Units"

3.11 ASME N509-1989; Nuclear Power Plant Air Cleaning Units and Components

3.12 ASME N510-1989; Testing of Nuclear Air Treatment Systems

3.13 NUREG 0737 Clarification of TMI Action Plan Requirements, Item III.D3.4, Control Room Habitability

3.14 ASME AG-1-1997; Code on Nuclear Air and Gas Treatment

3.15 RG 1.92 Combining Modal Response and Spatial Components in Seismic Response Analysis, Rev. 1, 1976

3.16 American Iron and Steel Institute; Cold-Formed Steel Design Manual, 1983 Edition.

3.17 ASME B&PV Code Section III-1974

3.18 NUREG 0700, Human-System Interface Design Review Guidelines, Rev. 1; 1996

3.19 10CFR50, Appendix A, GDC 19 – Control Room

3.20 10CFR50 – Appendix R

3.21 10CFR 50.49 - Environmental Qualification

3.22 NRC SECY 77-439, Single Failure Criteria, 8/17/77

3.23 Regulatory Guide 1.97, Instrumentation for Light-Water-Cooled Nuclear Power Plants to Assess Plant and Environs Conditions During and Following an Accident.

3.24 ANSI A58.1 1982

3.25 NFPA 13, lasted addition at time of installation/manufactoring

3.26 AIF-GDC 1

3.27 IEEE-384-1981

3.28 IEEE-383-1974

3.29 RG&E Design Analysis DA-EE-98-157, Rev. 0; "Cable Sizing Criteria"

3.30 ASHRAE Handbook - Fundamentals, 1997.

3.31 RG&E EWR 10182 Design Criteria, Rev. 1, "Generic Design Criteria"

3.32 RG&E EWR 2512 Design Criteria, Rev. 5, "Seismic Upgrade Program"

3.33 SEV-1153 Safety Evaluation for MDCN 2019; Pneumatic Controls Modification to Allow Fresh Air into Control Room.

3.34 RG&E Design Analysis DA-ME-2000-038, Rev. 0; "Control Room Heat Generation & Winter Heat Load"

4.0 Design Conditions

All applicable Design Conditions are included in section 2.0.

5.0 Load Conditions

5.1 Structural Load Conditions and allowable stress criteria for existing structures are defined in section 9.

5.2 Mechanical system load conditions for existing equipment are defined in Attachment B.

6.0 Environmental Conditions

6.1 Environmental conditions currently found in the Ginna UFSAR are listed below and, unless noted otherwise, shall be the conditions assumed for this modification.

6.1.1 Control Room

Normal operation (MODES 1 and 2):

Temperature	50°F to 104°F (usually 70°F to 78°F)
Pressure	0 psig
Humidity	60% (nominal)
Radiation	Negligible

Accident Conditions:

Temperature	< 104°F
Pressure	0 psig
Humidity	60% (nominal)
Radiation	Negligible
Flooding	Not applicable

6.1.2 Relay Room & Relay Room Annex

The UFSAR does not currently list environmental conditions for the Relay Room Annex where the new CREATS & CRECS equipment will be installed. The conditions specified for the Relay Room will be used and the UFSAR shall be changed accordingly prior to closeout of this PCR.

Normal operation (MODES 1 and 2):

Temperature	50°F to 104°F
Pressure	0 psig
Humidity	60% (nominal)
Radiation	Negligible

Accident Conditions:

Temperature	< 104°F
Pressure	0 psig
Humidity	60% (nominal)
Radiation	Negligible
Flooding	Not applicable

6.1.3 Control Building Air Handling Room

Normal operation (MODES 1 and 2):

Temperature	50°0F to 104°F
Pressure	0 psig
Humidity	60% (nominal)
Radiation	Negligible

Accident Conditions:

Temperature	< 104°F
Pressure	0 psig
Humidity	60% (nominal)
Radiation	Negligible
Flooding	3 feet (estimated for a service water line leak).

7.0 Interface Requirements

7.1 The modification will interface with the following plant systems:

Control Room HVAC system

Battery Room Ventilation System for Hydrogen control

Instrument Air system for damper and heater control

Class 1E 125 VDC power

Class 1E 480V vital power

Control Room Radiation monitor actuation circuit(s)

Control Room Toxic Gas Monitor (CRTGM) actuation circuit(s)

Engineered Safety System Actuation System for Emergency Diesel load shedding

Fire Protection

7.2 The modification will interface with the following plant structures:

Control Building (Seismic Category I) including the Control Room, Control Building Air Handling Room, Relay Room, & Relay Room Annex.

Cable Tunnel (Seismic Category I)

Auxiliary Building (Seismic Category I)

8.0 Material Requirements

8.1 There are no special material requirements associated with this modification. All materials and coatings shall be compatible with the performance and with the environmental requirements of the component or system in which they are used.

9.0 Mechanical Requirements

9.1 The code of construction for all new equipment shall be ASME AG-1 and, for equipment not addressed by that code (eg. filter housings), ANSI N509-1989. In the event that any conflict exists with AG-1; this Design Criteria or the applicable RG&E Specification shall govern.

9.2 The CREATS carbon filters shall be 4" deep, Type III, and equipped with a minimum of 10 individual sampler canisters or a suitably equivalent method for obtaining representative samples of carbon for laboratory testing.

9.2.1 Preheating of air entering the carbon filters is not required since reduced filter efficiency caused by moisture is accounted for in the Ginna dose analysis.

9.3 The new CREATS fans shall be direct drive.

9.4 Balancing dampers shall be provided for each train of CREATS.

9.5 Arrangement of equipment shall include a straight section of duct, unobstructed by fittings or components, with a length that allows accurate measurement of airflow through the system.

9.6 New piping and pipe supports shall be designed in accordance with the requirements of reference 3.32 (EWR 2512).

9.7 Modification to existing piping and pipe supports shall be in accordance with the requirements of reference 3.31 (EWR 10182).

9.8 New damper and duct support seismic loads shall be determined following the piping system analysis methodology in Attachment B. However, new duct stresses shall be evaluated using methods presented in the American Iron and Steel Institute (AISI) "Cold-Formed Steel Design Manual" as defined in AG-1. Duct stresses shall meet the acceptance criteria in ASME AG-1. Duct support stresses shall be evaluated using AISC Steel Construction Manual 8th edition, except Attachment C shall be used for loading combinations and stress criteria.

9.9 Attachment of any new dampers or ductwork to the existing system shall be done using flexible connectors for mechanical isolation. In locations where new equipment is connected new dead weight supports shall also be installed, as necessary, to provide equivalent support for the existing ductwork.

10.0 Hydraulic Requirements

10.1 Hydraulic losses in piping and HVAC systems shall be considered and evaluated as part of the system design process to ensure the new and modified systems meet their performance/design requirements and all equipment is operated within its design parameters.

11.0 Structural Requirements

11.1 In accordance with UFSAR section 1.8.2.7 and reference 3.1; the new CREATS, CRECS, and new Control Room Emergency Zone isolation dampers AKD03, AKD21, AKD22, AKD23, & AKD24 shall all be seismic Category I, and 10CFR50 Appendix B QA requirements shall be applied.

11.2 Standard RG&E seismic conduit supports shall be utilized for all new conduit runs wherever possible. If custom supports are required, they shall be designed in accordance with Attachment A.

11.3 Pipe Support requirements are addressed in the Mechanical Requirements sections 9.6 & 9.7.

12.0 Chemistry Requirements

12.1 All new materials shall be evaluated to ensure they do not adversely impact Ginna Control room habitability.

12.2 All new materials and consumables shall be evaluated by the Ginna Material Control program.

13.0 Electrical Requirements

13.1 Power sources

13.1.1 The new train A & B CREATS fans, heaters, dampers, and CRECS fans & compressors shall be powered from a respective train A & B, Class 1E source.

13.1.2 Electric damper actuators and/or SOVs for new isolation dampers AKD21 & AKD23 shall be powered from a train 'A' Class 1E source.

13.1.3 Electric damper actuators and/or SOVs for new isolation dampers AKD22 & AKD24 shall be powered from a train 'B' Class 1E source.

13.1.4 Electric damper actuators and/or SOVs for new isolation damper AKD03 shall be powered from a train 'A' Class 1E source. (Existing SOV 14922S for existing damper AKD02 is powered from 'B' train)

13.1.5 After the new CREATS system is in service the existing 2000 CFM CREATS fan (AKF07) will no longer have a Safety Related function; it's power supply from MCC K shall be removed and made spare.

13.2 Electrical Analyses & Design requirements

13.2.1 The effects of all load increases or decreases shall be considered and shown to be within the margins allowed by the current loading analyses.

13.2.2 All components shall be suitable for service at the required voltages. Any new heaters may be sized for nominal bus voltage since heating would not be required until after the LOCA injection phase when bus voltage is assumed to be restored to nominal values.

13.2.3 All Non-Safety Related cables and loads fed from a Safety Related source of power shall be electrically isolated from the source of power with qualified isolation devices in accordance with the requirements of IEEE 384-1981.

13.3 Cable Routing Requirements

13.3.1 Cable installed in conduit does not increase the fixed combustible loading of the area in which it is installed.

13.3.2 Routing of Nuclear Safety Related raceway shall ensure that the function of the enclosed cables is not affected by vibration, abnormal heat or stress.

13.4 Cable Construction Requirements

Cable construction shall adhere to the requirements of Section 7.4 of reference 3.29.

All Nuclear Safety Related cables shall be protected from physical damage during normal operation.

All cable installed in harsh environments for components required to remain operable under accident conditions shall have IEEE 383-1974 LOCA certification.

13.5 Cable Ampacity and Derating

The ampacity and derating of cables in conduit and cable trays shall adhere to the requirements of Section 7.5 of reference 3.29.

13.6 Electrical Equipment

Components such as controls shall be designed and installed to the extent practicable with bump protection. Components such as relays and electrical connections shall be designed and installed to the extent practicable with immunity from jarring.

Cable support grips and/or internal equipment wire/cable ties shall be required to the extent practical in order to reduce stress on the terminations and facilitate safe access to the equipment.

To the extent practical, Safety Related electrical components shall not be located within zone of direct impingement from High Energy Line Break (HELB) unless said components have been specifically designed to withstand a HELB or other protective measures are provided.

14.0 Layout and Arrangement Requirements

14.1 The new CREATS and CRECS shall be located inside, and on the roof of, the Relay Room Annex. Equipment arrangement details are provided on RG&E drawings 33013-3000 & 33013-3002. Equipment layout shall include access for removal, repair, and maintenance as necessary.

14.2 The arrangement of controls on the Auxiliary Benchboard (ABB) and the system's sequence of operation shall be approved by the GARD team, in accordance with procedure EP-3-P-133.

15.0 Operational Requirements

15.1 One or both new trains of CREATS & CRECS may be started manually at the Auxiliary Benchboard (ABB) without isolating the CREZ.

15.2 Manual CREZ isolation shall work as described in section 16.

15.3 The new purge mode of Control Room HVAC system operation shall be manually actuated at the ABB only; the need for existing pneumatic control valves located inside the Control Room kitchen shall be eliminated.

15.4 The existing switch on column F12 outside the Control Room shall trip the normal CR HVAC supply, return, and lavatory fans and heating elements (AKF03, AKF08, AKF09, & AKA03)

15.5 The existing need for the manual control of heaters in the accident mode of operation shall be eliminated.

16.0 Instrumentation and Control Requirements

16.1 Safety Injection (SI) interlocks

16.1.1 This modification shall add the necessary interlocks to make an SI signal isolate the CREZ, actuate CREATS, and trip the existing supply & return air fans AKF03 & AKF08.

16.1.2 The new CREATS fans and all damper actuators requiring power to allow CREATS air flow shall remain energized during an SI signal, they shall NOT be stripped by an SI signal.

16.1.3 Dampers required to isolate the CREZ shall fail to the closed position upon loss of motive force, these loads may be stripped by an SI signal.

16.1.4 To preserve D/G loading margin during the injection phase of a LOCA, the new electric heaters and the new CRECS components (compressor & condensing fan) in both trains shall strip upon an SI signal. This is acceptable because thermal transients in the Control Room will develop slowly and in all scenarios the EOPs reset SI early enough to allow heaters or CRECS to maintain or restore a reasonable temperature in the Control Room.

16.2 Radiation Monitor, Toxic Gas Monitor, and manual isolation interlocks.

16.2.1 Actuation of a Control Room outside air intake Radiation Monitor, a Control Room Toxic Gas Monitor, or manual isolation at the ABB shall isolate the CREZ, actuate CREATS, and trip the existing supply & return air fans AKF03 & AKF08.

16.2.2 Any remaining interlocks of area radiation monitor R-1 with CREZ isolation and CREATS actuation circuitry shall be removed.

16.2.3 Pneumatic controls and/or solenoid valves that are no longer needed for the existing Control Room HVAC system shall be removed.

16.3 Instruments & alarms

16.3.1 Two thermostats shall be located in the Control Room, each controlling a train of CRECS and heaters when power is available to them and the associated CREATS fan is running.

16.3.2 The ABB shall provide indication of a low flow condition for each train of CREATS. Each indicator shall respond to a separate device that qualitatively indicates flow through it's respective train of CREATS.

16.3.3 The ABB shall provide indication of a high temperature sensed in the flow stream of either train's charcoal filter.

16.3.4 The ABB shall include indication of the open or closed status of each of the three flow paths isolated by dampers AKD02, AKD03, AKD21, AKD22, AKD23, & AKD24. The indication shall come from end switches that are mounted on the respective dampers and positively indicate damper position.

16.3.5 The ABB shall include indication of the open or closed status of each train's discharge isolation damper. The indication shall come from end switches that are mounted on the respective dampers or actuators.

16.3.6 Ductwork shall include access ports for insertion of portable instruments used to measure CREATS airflow. Ports shall be located in a straight run of duct at a maximum distance from upstream & downstream fittings or components that would create a non-uniform velocity profile.

16.4 Controls

16.4.1 At the ABB each CREATS fan shall have a manual switch with a green, and a red, indicating light.

16.4.2 The existing pistol-grip switch for the Control Room Air Handling Unit shall remain, along with the red & green lights indicating supply & return air fan status.

16.4.3 At the ABB two redundant switches or pushbuttons shall provide the manual isolation feature, either device shall actuate both trains of CREATS and close both trains of isolation dampers. Manual isolation reset capability shall also be provided at the ABB.

17.0 Access and Administrative Control Requirements

17.1 Compensatory measures shall be provided whenever security barriers may be compromised during construction phases.

17.2 Impact of construction activities upon continuous operations in the Control Room shall be minimized.

18.0 Redundancy, Diversity and Separation Requirements

The CREATS and CRECS trains shall be installed with adequate independence, redundancy, capacity, and testability such that a single failure will not prevent the system from performing its safety related function.

The power source requirements defined in section 13.1 assure that redundant components are powered from diverse sources such that failure of a single train of 1E power will not cause a failure of both trains to perform their function.

18.1 Redundancy

Redundancy shall be designed into the safety related functions associated with the CREATS system and any interfacing safety related system. Single failures shall be evaluated for each system. The criteria in NRC SECY 77-439 shall be used for evaluating failures except as noted below:

- Passive and active failures of electrical and I&C systems shall be considered. Cable shorts are not considered credible failures for Ginna unless generated by external events such as fires and HELB. Spurious operation (active or passive) of electrical devices such as contacts, switches and relays are considered credible failures for Ginna.

- Only active failures shall be considered for mechanical systems at Ginna. Failure of a check valve or backdraft damper to activate is considered a passive failure for Ginna.

- If a system train is out of service for short term testing or maintenance, a single failure need not be considered in the other train during the inoperable period per ANSI/ANS-58.9-1981 section 4.3.

18.2 Separation of Redundant Circuits

Cables and equipment that are replaced or added by this PCR shall meet the separation criteria of IEEE 384 to the maximum extent practicable given the existing plant configuration. Where the separation requirements of IEEE 384 cannot be met, the following separation methodology shall be followed:

18.2.1 All components requiring redundant cabling, as well as the cabling for redundant components, have been identified and the redundant power, instrumentation, and control cables are run separately.

18.2.2 Logic output control and power cables for the operation of redundant components in safety-related or engineered safety features systems are routed separately, except where cable trays converge at the MCB and ABB. The location of redundant component wiring in the MCB & ABB requires that these cables converge in this area.

18.2.3 Equipment and circuits required for safe shutdown shall meet the requirements for 10CFR50 Appendix R.

19.0 Failure Effects Requirements

19.1 Those systems and components of reactor facilities which are essential to the prevention or to the mitigation of the consequences of nuclear accidents which could cause undue risk to the health and safety of the public shall be designed, fabricated, and erected to performance standards that will enable such systems and components to withstand, without undue risk to the health and safety of the public, the forces that might reasonably be imposed by the occurrence of an extraordinary natural phenomenon such as earthquake, tornado, flooding condition, high wind, or heavy ice. The design bases so established shall reflect:

(a) appropriate consideration of the most severe of these natural phenomena that have been officially recorded for the site and the surrounding area and

(b) an appropriate margin for withstanding forces greater than those recorded to reflect uncertainties about the historical data and their suitability as a basis for design. (AIF-GDC 1)

19.2 The failures of structures, systems, and components important to safety and their potential effects on the accidents and events these SSCs are designed to withstand, shall be evaluated. The following internal and external hazards and RG&Es analysis of these hazards shall be evaluated for the proposed modifications.

- temperature
- humidity
- radiation
- jet impingement
- pressure
- hazardous materials
- wind and snow loads
- environmental Qual
- fires
- pipe whip
- sabotage
- missiles (internal, external)
- heavy loads
- toxic gases
- tornados
- seismic
- flooding

19.2.1 This modification shall evaluate any potential new failure modes other than those previously identified in the Ginna UFSAR sections 3.3 through 3.11 and shall ensure that they do not adversely impact the current plant design. New failure modes include the potential leakage of refrigerant from CRECS cooling coils into the Control Room.

20.0 Test Requirements

20.1 Post-modification acceptance testing shall prove that the new systems meet the requirements described in previous sections 2 (Performance), 15 (Operational), & 16 (Instrumentation & Control).

21.0 Accessibility, Maintenance, Repair and Inservice Inspection Requirements

21.1 The installed systems shall include access doors and clearance necessary for removal and replacement of all filters, including overhead clearance for the bulk carbon adsorbers.

21.2 The new fans, dampers, & actuators shall have adequate access for inspection, monitoring, service, repair and replacement.

21.3 The CRECS cooling coil location and connections to adjacent ductwork shall allow access to the coils for inspection and/or replacement of the coils without the need for welding or grinding.

22.0 Personnel Requirements

22.1 Personnel and procedures used in construction and testing shall be qualified in accordance with the applicable code of construction.

23.0 Transportability Requirements

23.1 Ductwork, housings, and other large components may be shipped knocked down for field assembly after being placed inside the Relay Room Annex.

24.0 Fire Protection Requirements

24.1 Heat detectors located in the CREATS airstream shall alarm in the Control Room. A fire response procedure shall direct operators to verify a high temperature and, if required, connect a fire hose to the charcoal filter's deluge system header in order to douse the fire.

24.2 The suppression system shall be designed for the flow and pressure available from a hose routed into the Relay Room Annex from hydrant #11 outside the Relay Room Annex or from the closest hose reel located in the Turbine Building.

24.3 The combustible loading of new equipment installed in the Relay Room Annex shall be evaluated and included in the Fire Hazards Analysis and volume I of the Fire Protection Program Report.

25.0 Handling Requirements

25.1 Packing, shipping, and storage requirements shall be in accordance with the applicable section of the code of construction; ANSI AG-1 or N509.

26.0 Public Safety Requirements

26.1 There are no special Public Safety requirements associated with this modification.

27.0 Applicability

27.1 There are no special requirements for assuring materials, processes, parts, or equipment are suitable for their intended application.

28.0 Personnel Safety Requirements

28.1 All work for this modification shall be performed in accordance with the RG&E Safety manual.

ATTACHMENT A
STRUCTURAL LOADS AND STRESS ACCEPTANCE CRITERIA

A.1 STRUCTURAL LOAD CRITERIA

A.1.1 Dead Load - D

Dead loads will include the weight of the structure, the weight of permanently supported equipment (such as filters, fans, dampers, electrical cabinets, etc., as shown on the equipment vendor's drawings) and system components (such as piping, cable trays, conduit and ductwork). Dead loads are determined from construction drawings and based on field inspections conducted earlier in the program. The service loads will be included in the dead load. (Service load is the dead load of all equipment, i.e., filters, fans, dampers, piping, conduit, switchgear, etc., that is permanently in place on the structure).

A.1.2 Live Load - L

Live loads on all floors will be equal to the uniform live loads shown on the original plant drawings for normal and severe load cases. Twenty five (25) percent of the uniform live loads shown on the original plant drawings will be used for the Live Load, when considering extreme load cases, except on the Operating floor of the Turbine Building where 100 psf will be used for the Live load when considering extreme load cases.

A.1.3 Lateral Earth Pressure - H

The pressure exerted by the soil on the various structures.

A.1.4 Buoyant Force - F^1

The buoyant force of the design basis flood.

A.1.5 Thermal Loads - T_o

Thermal loads from piping systems during normal operating or shutdown conditions, based on the most critical transient or steady state condition, are assumed to be equal to 2.5% of dead loads and are included in the overall dead load.

A.1.6 Pipe Reactions - R_o

Pipe reactions during normal operating or shutdown conditions based on the most critical transient or steady state condition are assumed to be equal to 2.5% of the dead loads and are included in the overall dead load.

A.1.7 Normal Wind Loads - W_n

Wind loads will be based upon the requirements of ANSI A58.1-1982. The design will be based on a 100 year wind of 75 mph at a height 30' above the ground.

A.1.8 Normal Snow Loads - S_n

Snow loads will be based upon the requirements of ANSI A58.1-1982. The design ground snow load shall be 40 psf. Drifting shall be considered.

A.1.9 Extreme Snow Load - S_n'

The extreme snow load specified for Ginna Station is based on the 48-hour maximum winter precipitation, equivalent to 50 psf added to the 100-year recurrence accumulated ground snow pack of 50 psf, resulting in a total roof load of 100 psf. Drifting will not be considered in this extreme load case.

A.1.10 Design Tornado - W

This design will consider all tornado loads and conditions that have a probable occurrence of at least once every 100,000 years. This probability corresponds to a tornado with a maximum wind speed of 132 mph.

Wind pressures (W_w) will be based on the procedure found in ANSI A58.1-1982 where p (design pressure) = q (Cp) (Gh) and $q=0.00256K_{z(IV)}^2$.

In these equations:

V = maximum wind velocity (132 mph).
C_p = wind coefficients based on ANSI A58.1
G_h = Gust coefficient = 1.0
K_z = Velocity Pressure Exposure Coefficient based on ANSI A58.1.
I = Important Factor based on ANSI A58.1.

Forces due to differential pressure (W_p) shall be based on an internal pressure of +0.4 psig; however, utilization of existing vent area and installation of additional vent area may be used to reduce or eliminate this load.

Forces due to missile impacts (W_m) shall be based on two potential missiles. One is a 1 inch diameter steel rod, three feet long, weighing eight pounds, and having a horizontal velocity in any direction of 60% of the maximum wind speed. The second is a 13½ inch diameter wood telephone pole, 35 feet long, weighing 1,490 pounds and having a horizontal velocity in any direction of 40% of the maximum wind speed. Additionally, both missiles will be considered as having vertical velocities equal to 80% of their maximum horizontal velocities.

A.1.11 Operating Basis Earthquake (OBE) - E

Loads due to an OBE will be based on a maximum ground acceleration of 0.08g.

A.1.12 Safe Shutdown Earthquake (SSE) - E'

Loads due to an SSE will be based on a maximum ground acceleration of 0.020g.

A.2 Structural Load Combinations and Acceptance Criteria

The following load combinations and acceptance criteria will be considered in evaluating any modifications. These criteria were approved by the NRC as part of Phase 1 of the Structural Upgrade Program.

A.2.1 Load Combinations For Structural Steel

Load Case	Acceptance Criteria
1. $D + L + S_n$	1.0S (see Note 1)
2. $D + L + W$	1.0S
3. $D + L + E$	1.0S
4. $D + L + S_n + W$	1.6S
5. $D + L + S_n + E$	1.5S
6. $D + L + S_n + E'$	1.6S
7. $D + L + S'_n$	1.6S
8. $D + L + W_T$ (see Note 3)	1.6S

A.2.2 Load Combinations For Reinforced Concrete

Load Case	Acceptance Criteria
1. $1.4D + 1.7L + 1.7S_n$	U (see Note 2)
2. $1.4D + 1.7L + 1.7W$	U
3. $1.4D + 1.7L + 1.9E$	U
4. $D + L + S_n + W$	U
5. $D + L + S_n + E$	U
6. $D + L + S_n + E'$	U
7. $D + L + S'_n$	U
8. $D + L + W_t$ (see Note 3)	U

A.2.3 Load Combinations for Foundation Stability

Load Case	Acceptance Criteria Minimum Factors of Safety		
	Overturning	Sliding	Flotation
1. D + H + E	1.5	1.5	—
2. D + H + W	1.5	1.5	—
3. D + H + E'	1.1	1.1	—
4. D + H + W_t	1.1	1.1	—
5. D + F'	---	—	1.1

NOTES:

1. S = the allowable steel stress as defined by the AISC Manual
2. U = the required concrete strength to resist factored loads, as defined by ACI 349-85
3. $W_t = W_w$ or W_p or W_m or $W_w + .5W_p$ or W_m or $W_w + .5W_p + W_m$.
4. When any load reduces the effect of other loads, the corresponding coefficient for that load shall be 0.9 if the load is always present or occurs simultaneously with the other load. Otherwise, the coefficient shall be zero.

A.2.4 The acceptance criteria for tornado missiles will be to ensure that the response of the structural system is within the capacity of the materials. Ductility ratios defined in ANSI 58.1 will be used as acceptance limits.

A.2.5 The acceptance criteria for the 188 mph tornado will be to ensure that the building remains stable.

W_T = Tornado loading
W_W = Tornado wind load
W_P = Tornado differential pressure load
W_M = Tornado missile

ATTACHMENT B
LOADING COMBINATIONS AND STRESS LIMITS FOR PIPING SYSTEMS

1.0 LOAD COMBINATIONS AND STRESS LIMITS FOR SUPPORTS

Loading Combination		Stress Limits
Normal:	D or (5) D + F + T	≤ Working Stress (1)
Upset:	D ± E or (5) D + F + T ± E	≤ Working Stress (1)
Faulted:	D ± E' or (5) D + F + T_o ± E'	≤ Faulted Stress (2)

Deadweight and thermal are combined algebraically

D = Deadweight
T = Maximum operating thermal condition for system
F = Friction Load (3)
E = OBE (Inertia load + seismic differential support movement)
E' = SSE (Inertia load + seismic differential support movement)
T_o = Thermal - Operating Temperature

(1) Working stress allowable per Appendix XVII of ASME III.

(2) Faulted stress allowable per Appendix XVII, Subsection N, and Appendix F of ASME III and USNRC Regulatory Guide 1.124. Safety Class 1 supports will be evaluated and designed in accordance with Regulatory Guide 1.124.

(3) Whenever the thermal movement of the pipe causes the pipe to slide over any member of a support, friction shall be considered. The applied friction force applied to the support is lesser of μ W or the force generated by displacing the support an amount equal to the pipe displacement.

μ =.35

W =Normal load (excluding seismic) applied to the member on which the pipe slides.

(4) Expansive anchorages shall meet the requirements of NRC IE Bulletin 79-02.

(5) For each loading condition, the greater of the two load combinations shall be used.

ATTACHMENT B
LOADING COMBINATIONS AND STRESS LIMITS FOR PIPING SYSTEMS

Component Standard Supports (New and Existing)

For a majority of the component standard supports, the loads given on the certified load capacity data sheets (LCD's), shall serve as the maximum allowable loads for the given condition.

U Bolt allowable loads will be based on finite element analyses using the criteria for bolts given in ASME Code Case 1644-4.

Rod hangers are generally single acting vertical supports, in the upward direction they are susceptible to an early buckling condition. Capacities therefore, in the upward direction are minimal. Consideration of this condition will be made within the evaluations of hangers. Capacities in the downward direction will continue to be obtained from applicable load capacity data sheets.

For component standard supports which do not have certified LCDS, the catalog allowable load at the time of manufacture will be prorated for the various loading conditions by the same factor used for the same component with a LCDS. The prorated load shall serve as the maximum load for the given loading condition.

Supports Fabricated from Non Catalog Items

The stress limits for supports fabricated from non-catalog items shall be based on allowable stresses from ASME III, ANSI or ASTM material used. If the material is not known, it is assumed to be A-36 carbon steel.

ATTACHMENT B
LOADING COMBINATIONS AND STRESS LIMITS FOR PIPING SYSTEMS

2.0 LOADING COMBINATIONS AND STRESS LIMITS FOR PIPING

	Loading Combinations	Stress Limits
1. Deadweight:	Design Pressure + Deadweight	$P_m \leq S_h$ $P_L + P_B \leq S_h$
2. OBE Seismic:	Design Pressure + Deadweight + Design Earthquake Loads (OBE)	$P_m \leq 1.2\ S_h$ $P_L + P_B \leq 1.2\ S_h$
3. SSE:	Operating Pressure + Deadweight + Maximum Potential Earthquake Loads (SSE)	$P_m \leq 1.8\ S_h$ $P_L + P_B \leq 1.8\ S_h$
4. Thermal:	A. Maximum Operating Thermal + OBE Displacements	$SE \leq S_A$
	B. Design Pressure + Deadweight + Maximum Operating + OBE Displacements	$P_L + P_B \leq S_h + S_A)$

Where:

P_m = primary general membrane stress; or stress intensity

P_L = primary local membrane stress; or stress intensity

P_B = primary bending stress; or stress intensity

S_S, S_h = allowable stress from USAS B31.1 Code for pressure piping

S_E = thermal expansion stress from USAS B31.1 Code for pressure piping

Attachment 9

Standard Review Plan Section 6.4 Comparison Review

Standard Review Plan (SRP) 6.4 Comparison Review:

This document compares Ginna's proposed Control Room Emergency Air Treatment System (CREATS) system to SRP 6.4. It is intended to simplify review of the TS change submittal by answering questions that would arise from a review performed using SRP 6.4, revision 2, dated July 1981. The format of this document matches the outline of SRP 6.4 section II (Acceptance Criteria) and section III (Review Procedures).

II. ACCEPTANCE CRITERIA

II-1. Control Room Emergency Zone

Ginna's Control Room Emergency Zone (CREZ) meets this acceptance criteria and is described in section 6.4.2.1 of the draft UFSAR description (Attachment 8 of the License Amendment Request). Ginna's computer MUX room is not part of the CREZ and is not an essential part of emergency response procedures.

II-2. Ventilation System Criteria

a. All CREZ isolation dampers are very low leakage and are included in the control room inleakage test boundary to assure that they do not challenge the unfiltered inleakage value assumed in dose calculations.

b. CREATS system design assures that no single active failure will cause loss of the CREATS function. The system consists of two 100% capacity trains of filtration, cooling, and heating. There are redundant isolation dampers in each of the three air flow paths that isolate the CREZ in the EMERGENCY mode of operation. Both trains of CREATS are connected to the CREZ by common duct work, a passive component not subject to single active failure criteria. Refer to section 6.4.2.2.2 of the draft UFSAR description (Attachment 8 of the License Amendment Request).

II-3. Pressurization Systems

This section is not applicable to Ginna because the ventilation system is not designed to pressurize the CREZ in any mode of operation.

II-4. Emergency Standby Atmosphere Filtration System

The CREATS system design and construction is based upon ASME AG-1, and is qualified

as Seismic Category I. Either of the two redundant trains can provide a nominal 6000 CFM of filtered recirculation, and the CREATS function is maintained despite failure of any single active component. These factors assure that CREATS will provide the iodine removal rates that are assumed in the revised dose calculations, thus satisfying the requirements of SRP 6.5.1 and NRC Regulatory Guide 1.52. Technical Specification 5.5.10 includes the test requirements that will ensure the CREATS filters continue to provide the assumed iodine removal rates.

II-5. Relative Location of Source and Control Room

a. Physical location of the control room's outside air intake and of all radiation sources will not be changed by the CREATS modification that required this TS amendment. Various sources are within 100 lateral and 50 vertical feet of the intake. Exact source-to-receptor distances were used to calculate the atmospheric dispersion factors for the applicable dose analysis. New dispersion factors were calculated using ARCON96 and then used in new dose calculations that were performed using Alternate Source Terms described in NUREG-1465 and NRC Regulatory Guide 1.183.

b. Various toxins were considered and are discussed in section 6.4.4.2. of the draft UFSAR description. The outside air intake is equipped with redundant ammonia and chlorine monitors that trigger CREZ isolation in order to meet exposure limits found in NRC Regulatory Guide 1.78, revision 1, dated December 2001.

II-6. Radiation Hazards

Dose calculations for all Design Basis Accidents have been revised using Alternate Source Terms described in NUREG-1465 and Regulator Guide 1.183 (Refer to Attachment 1 of the License Amendment Request). For all accidents the dose to Control Room operators is less than the 5 Rem TEDE limit.

II-7. Toxic Gas Hazards

Ammonia and chlorine monitors in the outside air intake are designed to trigger CREZ isolation to prevent control room concentration reaching the 2 minute protective action exposure limits defined for these two chemicals in NRC Regulatory Guide 1.78, revision 1, dated December 2001. Several other toxins were evaluated, refer to section 6.4.4.2 of the draft UFSAR description. Five SCBAs are available in the Control Room and, per the current UFSAR description, Section 6.4.2.2.2, "the plant has the capability to supply breathing air to 10 men for 6 hours at the rate of two (1.0 hour) bottles per man per hour. A compressor and cascade system are provided onsite to supply the breathing air."

III. REVIEW PROCEDURES

III-1. Control Room Emergency Zone

Ginna's CREZ meets this criteria and is described in section 6.4.2.1 of the draft UFSAR description (Attachment 8 of the License Amendment Request). Ginna's computer MUX room is not part of the CREZ and is not an essential part of emergency response procedures.

III-2. Control Room Personnel Capacity

This section of the SRP indicates a 100,000 ft^3 control room would support five persons for at least six days before carbon dioxide buildup presents a problem. The CO2 concentration effect is linear and so Ginna's 36,211 ft^3 volume would support five persons for more than 2 days. See section 6.4.4.2.6 of the draft UFSAR description (Attachment 8 of the License Amendment Request).

III-3. Ventilation System Layout and Functional Design

a. The configuration of Ginna CREATS meets the description of SRP section III-3-a-2: zone isolation, with filtered recirculated air. The CREATS system does not supply outside air, does not pressurize the CREZ, does not have a dual air inlet, and does not rely upon a bottled air supply.

b. The CREZ has a volume of 36,211 ft^3. Filter efficiency is assumed to be 70% for methyl iodide, 90% for elemental, and 98% for particulate. The CREATS system provides zero filtered makeup air to the CREZ. Unfiltered inleakage into the CREZ is assumed to be a maximum 300 CFM. Either train of CREATS will provide a nominal 6000 CFM of filtered air recirculation.

c. The ventilation system arrangement is shown on the last page of the License Amendment Request enclosure, and described in section 6.4.2.2 of the draft UFSAR description. The new CREATS is qualified as Seismic Category I, and it's function is maintained despite failure of any single active component. Redundant isolation dampers on all affected flow paths will ensure that unfiltered inleakage assumptions (which will also be verified by tracer gas inleakage testing) for radiological and toxin exposure remain valid. SRP 9.4.1 was reviewed and the proposed system was found to be in compliance with the Acceptance Criteria of SRP 9.4.1.

d. Ginna CREATS meets the description of SRP section III-3-d-2: zone isolation, with filtered recirculated air. Because of this system SRP sections III-3-d-1, 3, 4, and 5 do not apply to Ginna. Tracer gas testing will be performed in order to validate the unfiltered inleakage

assumed in dose calculations.

The assumed unfiltered inleakage rate is 300 CFM. By comparison the inleakage equal to 0.06 volume changes per hour (described in SRP section III-3-d-2 and Regulatory Guide 1.78) would be only 36.2 CFM for Ginna.

III-4. Atmosphere filtration Systems

See discussion in previous section II-4 of this document.

III-5. Relative Location of Source and Control Room

a. Radiation Sources

New atmospheric dispersion factors were calculated for all release points using ARCON96. The dispersion factors were then used in all new dose calculations prepared for DBAs using Alternate Source Terms described in NUREG-1465 and Regulatory Guide 1.183. All of the calculated doses to control room operators were found to be within guidelines, refer to Attachment 1 of the License Amendment Request.

b. Toxic Gases

(1) The normal outside air intake duct is equipped with redundant ammonia and chlorine sensors.

(2) Any of the four chlorine/ammonia sensors, upon reaching trip setpoint, will automatically isolate the CREZ and actuate CREATS.

(3) CREZ leak tightness is described above in the comparison to SRP section III-3-d.

(4) Fresh outside air admitted to the control room in the NORMAL mode of operation is limited to 2000 CFM.

(5) Five SCBAs are available in the control room, extra bottles and the ability to refill bottles are both available onsite.

c. Confined Area Releases

1) Hand-held fire extinguishers located in the control room are not considered a large enough volume to threaten control room habitability. Halon suppression in the Relay Room located below the control room was evaluated and is discussed in section 6.4.4.2.3 of the draft UFSAR description.

2) All spaces adjacent to the CREZ are served by HVAC systems separate from the Control Room normal HVAC system and CREATS. Configuration or balancing of HVAC systems in adjacent spaces will not direct potentially contaminated airflow into the CREZ. The tracer gas inleakage testing will validate this statement as well as the assumed 300 CFM unfiltered inleakage assumed in dose calculations. Interaction with other zones is discussed in section 6.4.2.4 of the draft UFSAR description.

(3) The only space susceptible to a HELB and adjacent to the CREZ is the Turbine Building. A corrugated 1/4" thick steel "super wall" was erected between these adjacent spaces to protect the CREZ from the brief pressure transient (0.46 PSID per section 3.6.2.5.1.4 of Ginna's current UFSAR).

III-6. Radiation Shielding

a. Radiation shielding is discussed in section 6.4.2.5 of the draft UFSAR description, including the 20" thick concrete roof, south wall, and west wall. The Control Room floor and the east & north walls do not have direct exposure to Containment. The concrete floor is 6" thick and construction of the north and east walls include 0.25" thick steel plate.

b. At the CREZ level there are no doors or ducts penetrating the south or west walls of the Control Building. All Control Building roof & wall penetrations are minimized to prevent radiation streaming.

c. There are no sources of radiation within the CREZ, and the adjacent Turbine deck and Relay Room spaces are not normally subject to airborne radioactive contamination. CREATS filters would only become radiologically contaminated following a DBA and, because of their distance from the CREZ, additional shielding from the filter housing is not required.

III-7. Independent Analyses

Source term, dispersion factor, and dose calculations for all appropriate DBAs have been revised. The results show that none of these DBAs will result in dose to control room operators greater than the 5 Rem TEDE limit. For detail refer to Attachment 1 of the License Amendment Request.

References:

Regulatory Guide 1.52 "Design, Testing, and Maintenance Criteria for Engineered-Safety-Feature Atmosphere Cleanup System Air Filtration and Adsorption Units of Light-Water-Cooled Nuclear Power Plants"

Regulatory Guide 1.78 "Assumptions for Evaluating the Habitability of a Nuclear Power Plant Control Room During a Postulated Hazardous Chemical Release"

Regulatory Guide 1.183 "Alternative Radiological Source Terms for Evaluating Design Basis Accidents at Nuclear Power Reactors"

Attachment 10

ARCON96/PAVAN Meteorological Data

See attached CDROM