UNITED STATES
NUCLEAR REGULATORY COMMISSION
WASHINGTON, D. C. 20555

Reply to:
301 E. Stewart Ave., Rm. 203
Las Vegas, NV 89101

Tel: (702) 388-6125
FTS:8/388-6125

Date: July 2, 1992

TO: Charlotte Abrams, M/S 4 H 3

FROM: Paul T. Prestholt
Sr. On-Site Licensing Representative

SUBJECT: TECHNICAL DATA TRACKING (Jan Statler); PROJECT TECHNICAL INFORMATION MODEL - OVERVIEW DRAFT; QUALIFIED RECORDS vs QUALITY ASSURANCE RECORDS; TECHNICAL DATA WORKSHOP - YUCCA MOUNTAIN PROJECT PARAMETER DICTIONARY (Gail Heitland); BACKGROUND

Please find enclosed the above-referenced documents. There will be at least two more in the near future.

PTP:nan
cc: Joe Holonich, M/S 4 H 3 w/o encs.

100638

ENCLOSURE FILED IN JACKET "TECH DATA TRACKING"

102
WM-11
NH03

9207130169 920702
PDR WASTE
WM-11 PDR

received with letter
dtd. 7/2/92

9207130169

TECHNICAL DATA TRACKING

PRESENTED BY

JAN STATLER

MANAGER, INFORMATION MANAGEMENT

SCIENCE APPLICATIONS INTERNATIONAL CORPORATION

102

PARTICIPANT DATA ARCHIVE (PDA)

A FACILITY AND/OR COMPUTER SYSTEM WHICH PROVIDE(S) CONTROLLED INTERIM STORAGE OF ACQUIRED OR DEVELOPED DATA IN THE FORM OF RECORD PACKAGES OR PACKAGE SEGMENTS, PRIOR TO THEIR TRANSFER TO THE PROJECT CRF.

THE ARCHIVE MAY BE THE PARTICIPANT'S LOCAL RECORDS CENTER, RESIDENT FILES, COMPUTER DATABASES, OR OTHER SUITABLE FACILITY OR SYSTEM.

ATDT

AUTOMATED TECHNICAL DATA TRACKING SYSTEM IS AN INFORMATION MANAGEMENT SYSTEM DESIGNED TO MAINTAIN REFERENCES TO RAW, REDUCED, AND INTERPRETED DATA PRODUCED BY YMP INVESTIGATORS.

DATA ACQUISITION

THE PROCESS OF OBTAINING, RECORDING, AND DOCUMENTING TECHNICAL DATA AS A RESULT OF A DATA GATHERING ACTIVITY.

DATA DEVELOPMENT

THE PROCESS OF REDUCING, ANALYZING, OR INTERPRETING TECHNICAL DATA OBTAINED DURING ACQUISITION.

DATA TRANSFER

THE PROCESS OF TRANSMITTING TECHNICAL DATA FROM THE YMP PARTICIPANT, WHO ACQUIRED OR DEVELOPED IT, TO ANOTHER PARTY.

SOURCES OF REQUIREMENTS

AP-5.1Q IMPLEMENTS TECHNICAL DATA MANAGEMENT REQUIREMENTS CONTAINED IN:

- PROJECT TECHNICAL DATA MANAGEMENT PLAN
- SITE–SPECIFIC AGREEMENT
- PROJECT QUALITY ASSURANCE REQUIREMENTS DOCUMENT (RW-0214)

PURPOSES

- DATA CATALOG
- PROVIDE TRACEABILITY
- FACILITATE DATA EXCHANGES
- INSTITUTIONAL MEMORY
- MANAGEMENT TOOL

APPLICABILITY

APPLICABLE TO YUCCA MOUNTAIN PROJECT OFFICE AND ALL OTHER PROJECT PARTICIPANTS WHO ACQUIRE, MANIPULATE OR DISSEMINATE TECHNICAL DATA

SOURCES OF REQUIREMENTS

AP-5.1Q IMPLEMENTS TECHNICAL DATA MANAGEMENT REQUIREMENTS CONTAINED IN:

- PROJECT TECHNICAL DATA MANAGEMENT PLAN
- SITE–SPECIFIC AGREEMENT
- PROJECT QUALITY ASSURANCE REQUIREMENTS DOCUMENT (RW-0214)

PURPOSES

- DATA CATALOG
- PROVIDE TRACEABILITY
- FACILITATE DATA EXCHANGES
- INSTITUTIONAL MEMORY
- MANAGEMENT TOOL

APPLICABILITY

APPLICABLE TO YUCCA MOUNTAIN PROJECT OFFICE AND ALL OTHER PROJECT PARTICIPANTS WHO ACQUIRE, MANIPULATE OR DISSEMINATE TECHNICAL DATA

APPLICABILITY

(CONTINUED)

APPLICABLE TO SCIENTIFIC AND ENGINEERING DATA.

- THROUGH MEASUREMENT BY PARTICIPANT STAFF
- PROCUREMENT THROUGH SUBCONTRACTORS
- INTERAGENCY AGREEMENTS• PROJECT TECHNICAL DATA BASE (TDB)
- PARTICIPANT DATA ARCHIVES
- PROJECT RECORDS MANAGEMENT SYSTEM
- OTHER TRANSFERS

DATA TRANSFER INCLUDES:

- TRANSFERS BETWEEN PARTICIPANTS
- SUBMITTALS TO TDB COMPONENTS

- TRANSFERS TO EXTERNAL AGENCIES/ORGANIZATIONS

DATA TRANSFER DOESN'T INCLUDE:

- SUBMITTALS BY A SUBCONTRACTOR TO A CONTRACTING YMP PARTICIPANT

- SUBMITTALS FROM AN AUTOMATED RECORDNG SYSTEM TO THE INTENDED YMP PARTICIPANT

RESPONSIBILITIES

PROJECT PARTICIPANTS

1) COLLECTING AND DOCUMENTING TECHNICAL DATA

2) PREPARING DATA RECORD PACKAGE SEGMENTS AND DATA TRANSMITTAL RECORD PACKAGES

3) ASSIGNING PARTICIPANT DATA TRACKING NUMBERS

4) ENTERING INFORMATION INTO ATDT

5) SUBMITTAL OF THESE RECORDS TO APPROPRIATE PDAs AND LRCs

6) SUBMITTAL FROM THE LRCs TO THE CENTRAL RECORDS FACILITY (CRF)

45 DAYS

OR

SCHEDULE

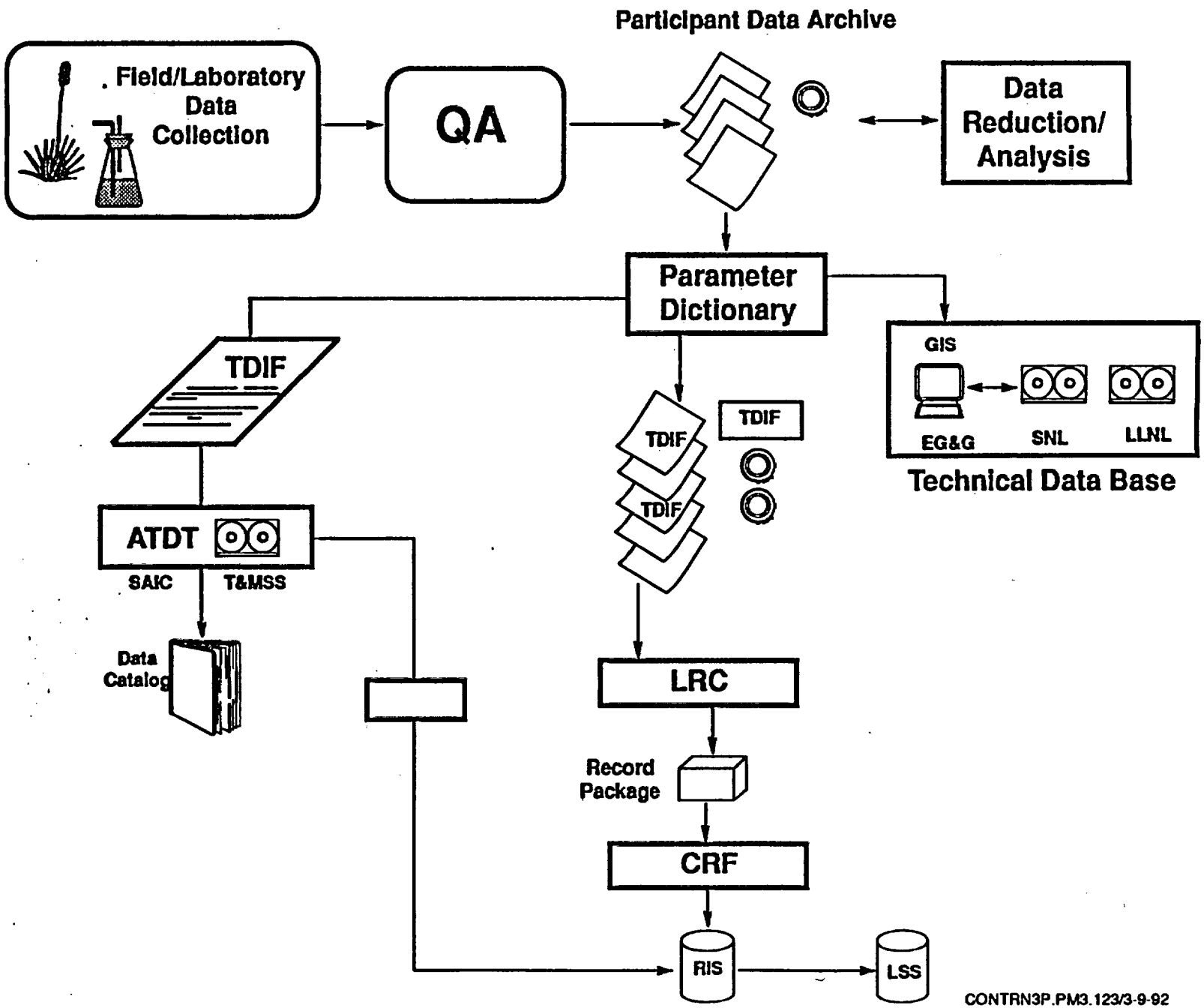
Participant Data Archive
Field/Laboratory Data Collection
QA
Data Reduction/ Analysis
Parameter Dictionary
TDIF
ATDT
SAIC
T&MSS
Data Catalog
TDIF
TDIF
TDIF
GIS
EG&G
SNL
LLNL
Technical Data Base
LRC
Record Package
CRF
RIS
LSS
CONTRN3P.PM3.123/3-9-92

USERS

- DOE MANAGEMENT
- PIs
- NRC
- OTHER INTERESTED PARTIES

YMP-023-R0

YUCCA MOUNTAIN SITE CHARACTERIZATION PROJECT
TECHNICAL DATA INFORMATION FORM

(Check one or more):

☐ DATA RESULTING FROM DATA ACQUISITION *(complete Parts I and II)*
Data Tracking Number (DTN): _____

☐ DEVELOPED DATA *(complete Parts I, II, and III)*
Data Tracking Number: _____

☐ DATA TRANSFER *(complete Parts III, and IV)*

PART I Identification of Data and Source

Submittal Date: _____ (MM / DD / YY) WBS Number: _____ Is Data Qualified? _____

Preparer: _____ (Last Name / First / Initial) PDA Org.: _____

Principal Investigator: _____ (Last Name / First / Initial) PI Org.: _____

Participating Organization Generating Data: _____

Automated Recording System Data Source: _____

Parameter: _____ Parameter No.: _____

Parameter Category: _____ Parameter Category No.: _____

Report Number: _____

Title/Description of Data: _____

Activity Number: _____ Governing Plan : _____ (Acronym)

Comments: _____

YMP-023-R0 **YUCCA MOUNTAIN SITE CHARACTERIZATION PROJECT**
TECHNICAL DATA INFORMATION FORM

PART II Data Acquisition and Development Information

Acquisition/Development Method: _____

_____

_____

_____

_____

_____

Identification
Number of Test: _____ Sample Number: _____

Acquisition/Development Location: _____

_____

Period of Data Acquisition/Development: _____
MM / DD / YY MM / DD / YY

PART III Source Data

A. If ALL data identified by a previous TDIF(s) was transferred or used to generate developed data, identify the DTN(s) assigned to the TDIF(s):

B. If only a portion of the data identified by a previous TDIF(s) were transferred or used to generate developed data, identify the DTN(s) assigned to to the TDIF(s):

YMP-023-R0 **YUCCA MOUNTAIN SITE CHARACTERIZATION PROJECT**
TECHNICAL DATA INFORMATION FORM

PART IV Transfer of Data ***(Use this page only if data were transferred.)***

Date of Transfer: _____
MM / DD / YY

A. Complete one of the following:

TDB Component: _____

Other Recipient: _____
Last Name First Name Initial

Recipient Organization: _____

B. Technical Data Base Submittal Supplementary Information:

1. Format of document containing submitted data (e.g., magnet tape, floppy disc, etc.). Attach any remarks regarding special storage format or data organization that might be required. NOTE: A hard copy of the submitted data is required.

_____

_____

2. Number of attached pages containing data: _____

3. Identification number(s) or Local Record Center (LRC) code(s) on each submitted document:

_____

4. Are submitted data published? ☐ Yes ☐ No

Published reference: _____

_____

5. If submittal includes a modification (addition, correction, etc.) to a previous submittal, indicate reference to previous submittal. Also indicate which data is to be removed or superceded, the data and information as it should be in the TDB, and the reason for the modification (include attachments if necessary).

_____

_____

_____

6. The attached data was collected for the Yucca Mountain Site Characterization Project and it is hereby authorized for inclusion in the TDB. All appropriate reviews and quality assurance requirements have been met.

_____ _____
TPO Signature/Organization MM / DD / YY

7. For TDB Administrator Use:

Acceptance Date: _____
MM / DD / YY

Rejection Date: _____
MM / DD / YY

(Check one or more):

☐ DATA RESULTING FROM DATA ACQUISITION *(complete Parts I and II)*
Data Tracking Number (DTN): _____

☐ DEVELOPED DATA *(complete Parts I, II, and III)*
Data Tracking Number: _____

☐ DATA TRANSFER *(complete Parts III, and IV)*

DTN Format

AAXXXXXXXXXXXX.YYY

Participant or TDB component

Particular activity identification, defined by participant/component

Data Package Segment (DPS) identifier

PART I Identification of Data and Source

Submittal Date: _____ (MM / DD / YY) WBS Number: _____ Is Data Qualified? _____

Preparer: _____ (Last Name / First / Initial) PDA Org.: _____

Principal Investigator: _____ (Last Name / First / Initial) PI Org.: _____

Participating Organization Generating Data: _____

Automated Recording System Data Source: _____

Parameter: _____ Parameter No.: _____

Parameter Category: _____ Parameter Category No.: _____

Report Number: _____

Title/Description of Data: _____

_____

_____

_____

Activity Number: _____ Governing Plan : _____ (Acronym)

Comments: _____

_____

_____

_____

PART II Data Acquisition and Development Information

Acquisition/Development Method: _____

_____

_____

_____

_____

_____

Identification
Number of Test: _____ Sample Number: _____

Acquisition/Development Location: _____

_____

Period of Data Acquisition/Development: _____
MM / DD / YY MM / DD / YY

PART III Source Data

A. If ALL data identified by a previous TDIF(s) was transferred or used to generate developed data, identify the DTN(s) assigned to the TDIF(s):

B. If only a portion of the data identified by a previous TDIF(s) were transferred or used to generate developed data, identify the DTN(s) assigned to to the TDIF(s):

Developed Data TDIF

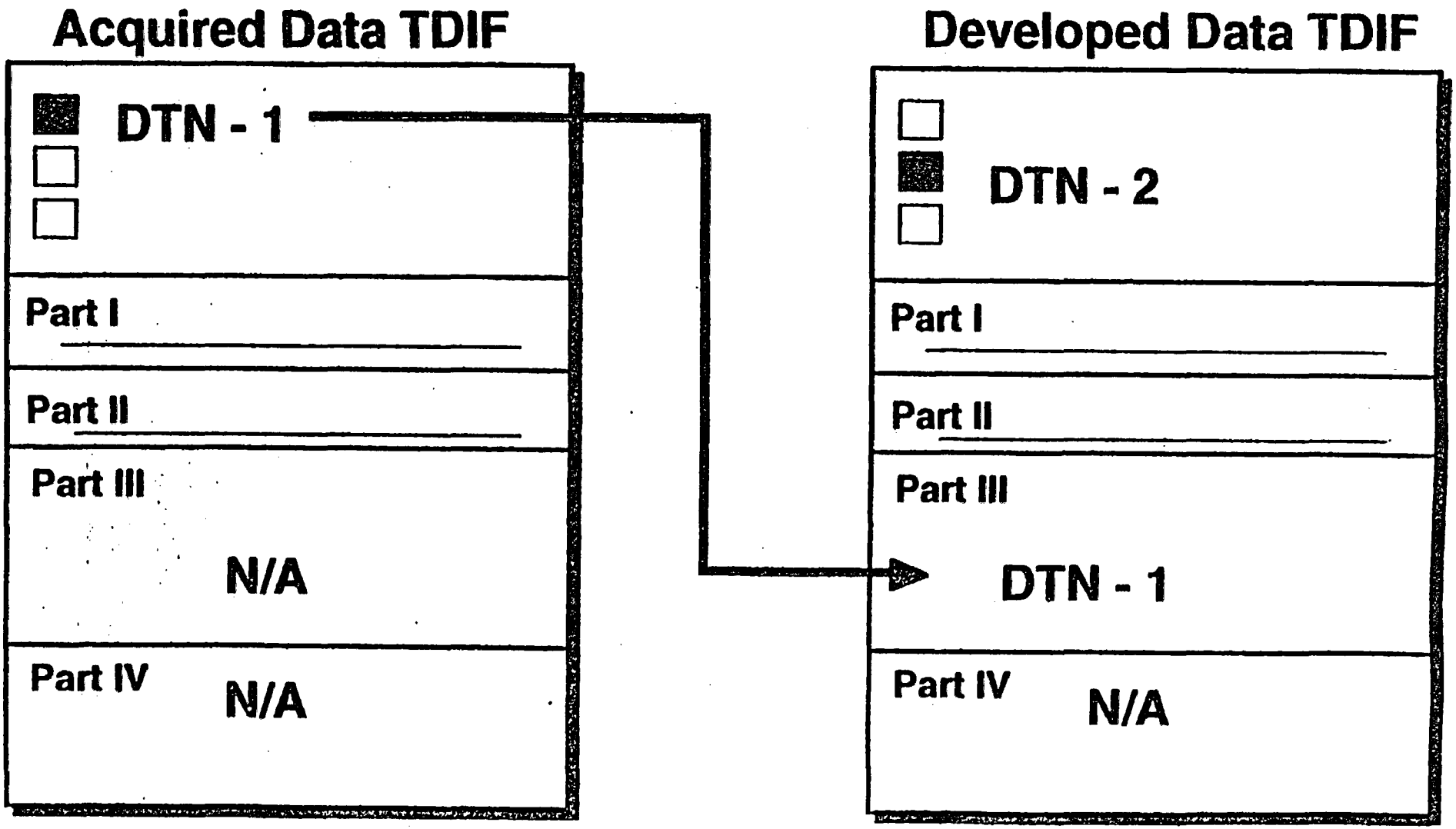

Combined Data Acquisition & Transfer TDIF

DTN - X

Part I

Part II

Part III

N/A

Part IV

Combined Developed Data & Transfer TDIF

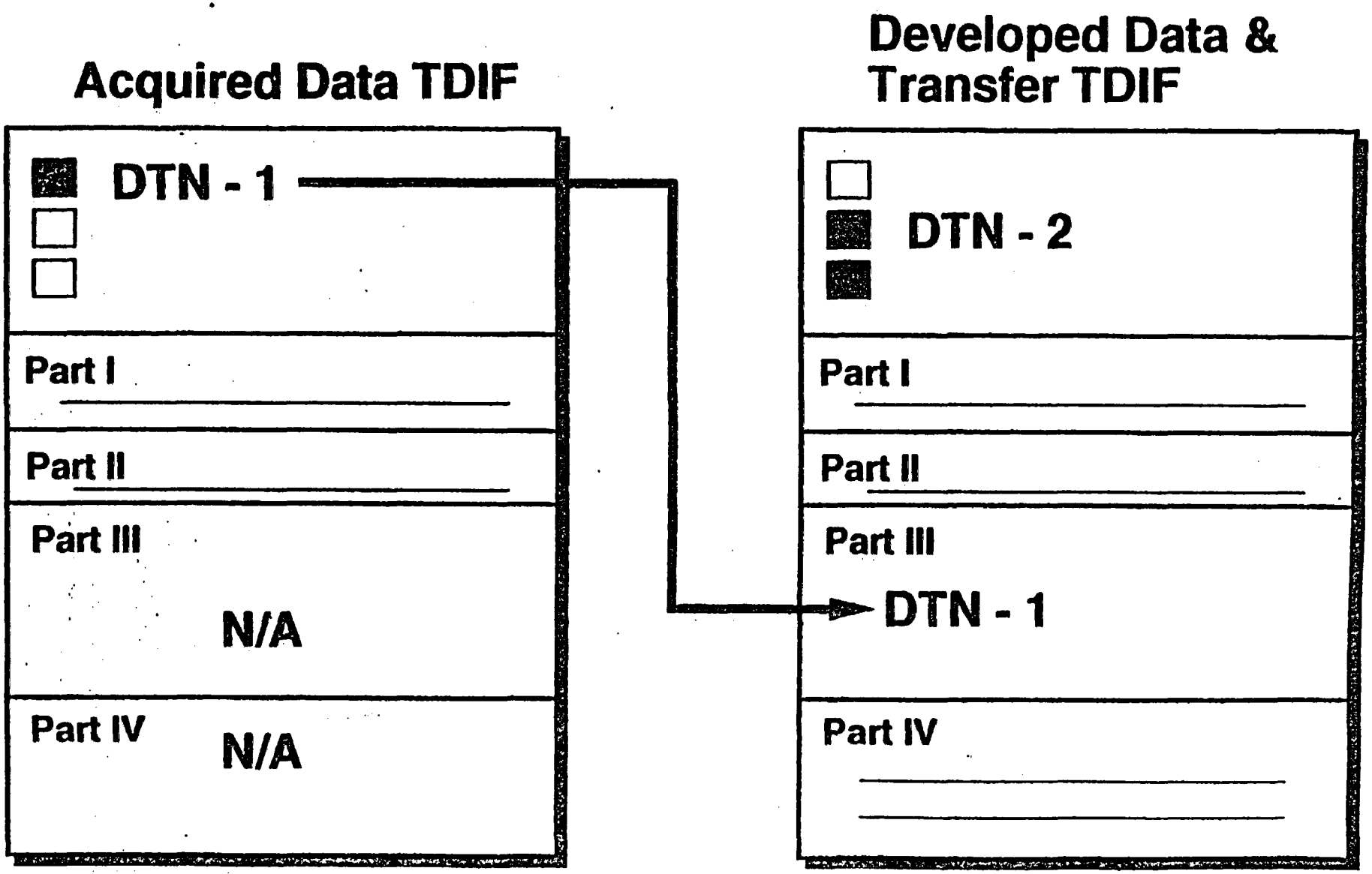

Selected Data TDIF

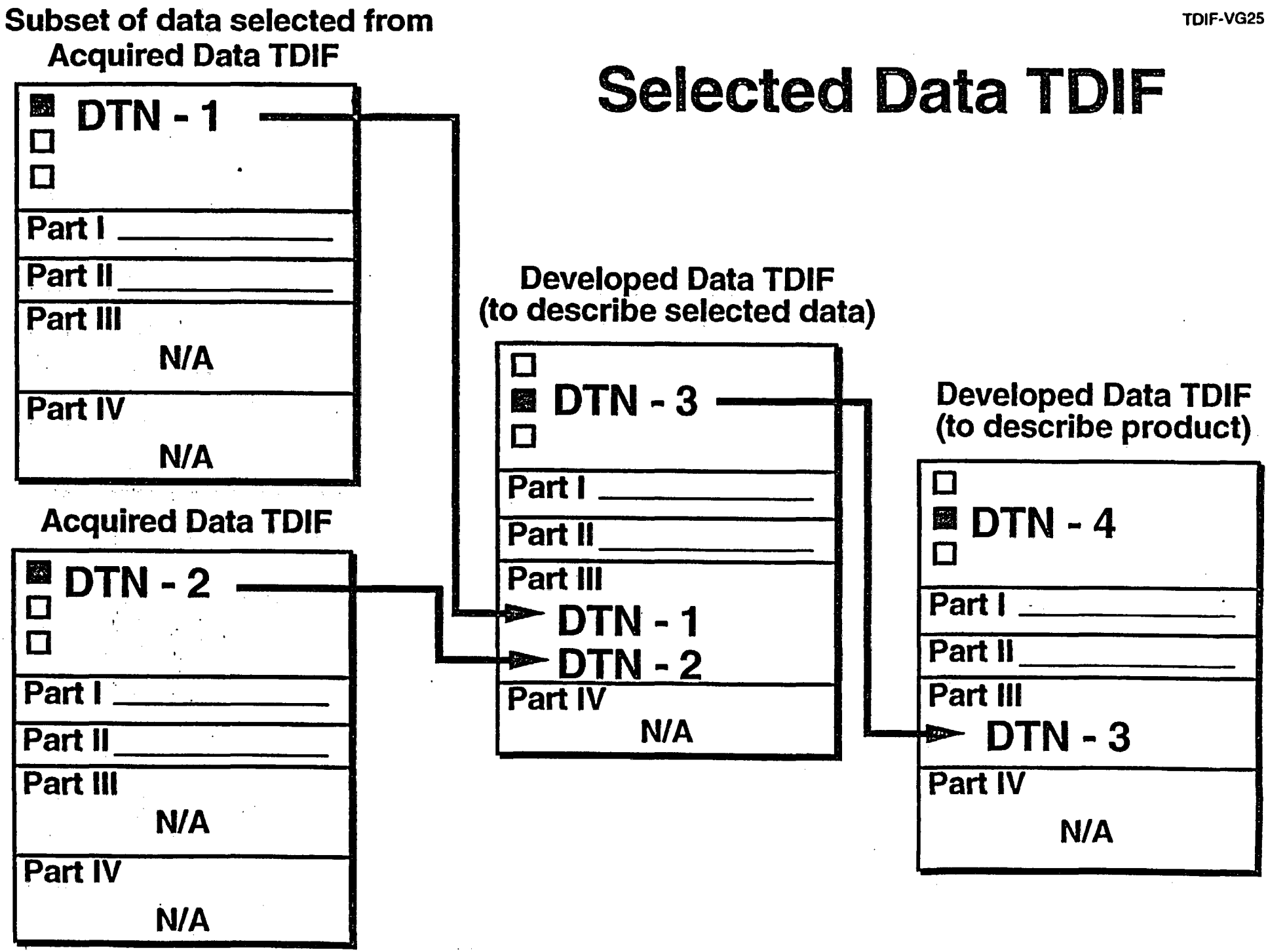

TDIF-VG26

Combined Selected Data & Transfer TDIF

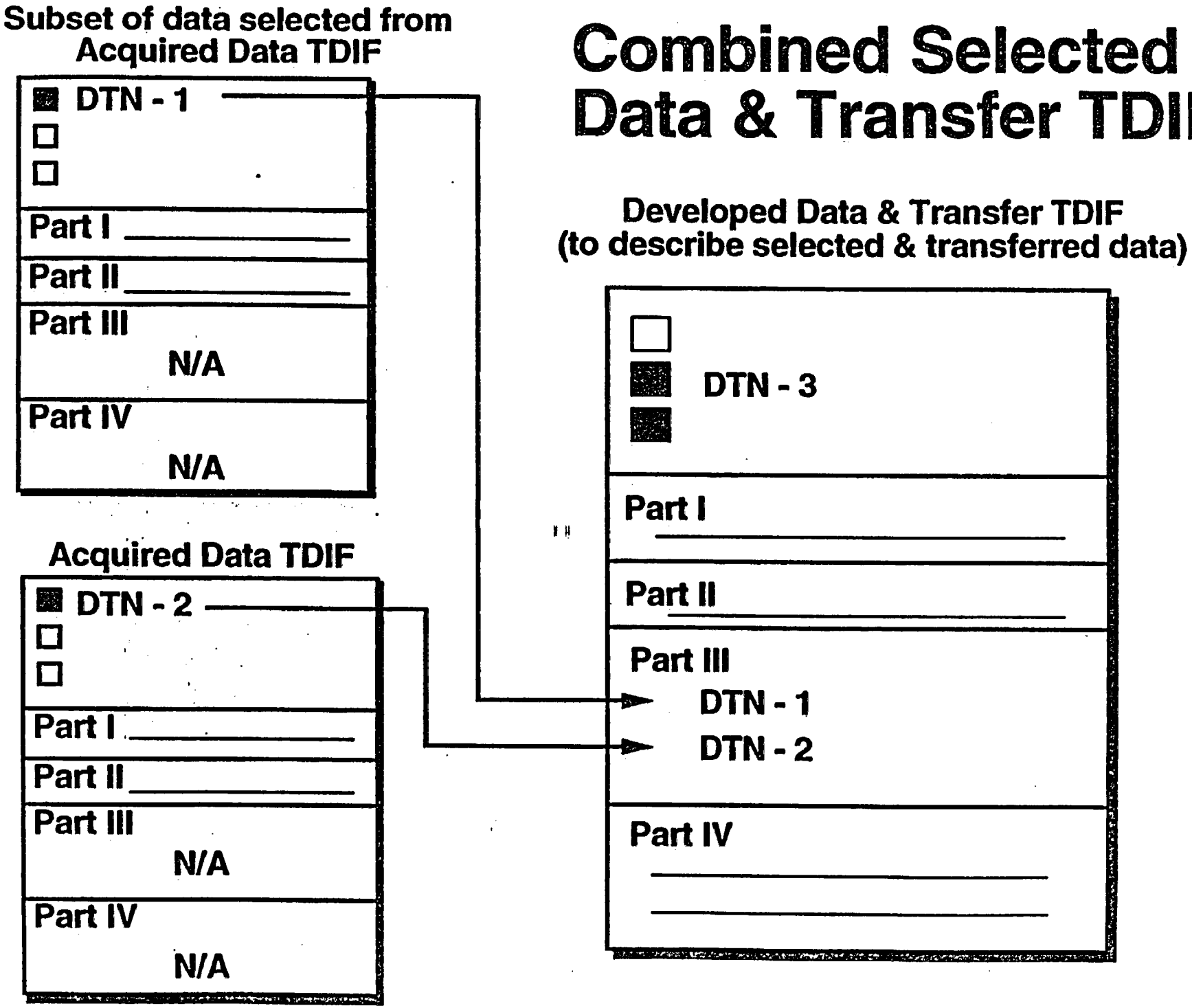

PROJECT TECHNICAL INFORMATION MODEL - OVERVIEW
DRAFT

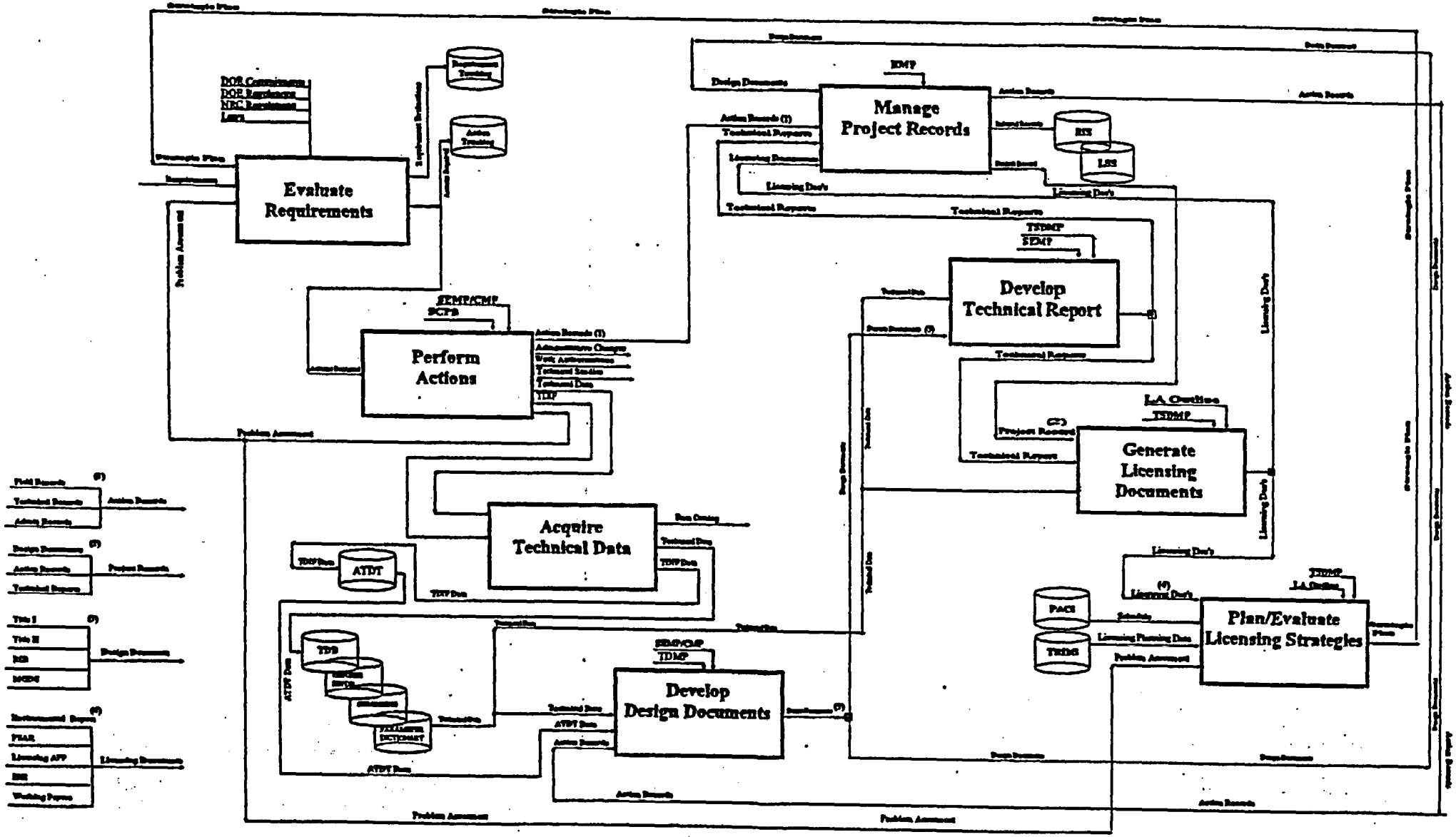

QUALIFIED RECORDS

VERSUS

QUALITY ASSURANCE RECORDS

The Quality Assurance Requirements Document defines a "Quality Assurance Record" as "Documents that are to become QA records are considered QA records upon completion and authentication by all required signatures. A complete QA record is a document that will receive no more entries and whose revision would be subject to a change control process. Prior to this final authentication, interim protection shall be afforded." The QARD also defines "Qualified Data", Qualification (of data)", and Qualification Testing". "Qualified Data" is "Data initially collected under a 10 CFR 60, Subpart G, quality assurance program or existing data qualified in accordance with Appendix A Section 20 of this document [the QARD]".

Although the QARD does not discuss "qualified records", it is safe to assume that a "qualified record" is data that meets the definition of "qualified data". "Qualified records" could also include those that demonstrate that an item meets design requirements" and "those that document the process of providing a desired level of confidence that data are suitable for their intended purpose" (see QARD definitions).

It is generally recognized that quality assurance programs may exist that conform to 10 CFR 50, Appendix B, but that a quality assurance program is not considered "qualified" until the Nuclear Regulatory Commission has conferred its approval. In its document" NRC Staff Site Characterization Analysis of the Department of Energy's Site Characterization Plan, Yucca Mountain Site, Nevada" (NUREG-1347) the NRC delineates two major areas of concern, one of which is the quality assurance program. On page 2-6, that document states that "Once NRC accepts the QA program in a given area, DOE may proceed with that part of its site characterization program while it continues to complete the milestones needed to obtain NRC acceptance of other parts of the site characterization program".

The NRC "accepted" the various Yucca Mountain Site Characterization program (YMP) Participant's Quality Assurance programs with and without exceptions on dates ranging from 10/24/90 to 12/20/91 (except that the objections raised in NUREG-1347 were not removed). As a result the data collected or generated by various Participants can be considered to be Qualified or not at different times.

In addition, there is the issue of whether or not developed data can be considered to be "qualified" if it was developed under a qualified QA program, but is based all or in part upon data that was collected or previously developed under a program that was not qualified. The decision has been that it cannot. In order for the developed data in the above example to be considered qualified, all of the supporting data must be qualified: either by being acquired or developed under a qualified QA program or

by being qualified through an approved qualification process.

Thus records may be generated under a quality assurance program, and be labeled correctly as "QA" and not be qualified. Data is only qualified if it was collected or developed after the acceptance of the applicable quality assurance program and the supporting data was also qualified. The attached schedule provides the dates of partial and full acceptance of YMP participant quality assurance programs. The details of priori approvals with exceptions are available through the individual participant's head of Quality Assurance or the Office of Civilian Radioactive Waste Management Quality Assurance Division.

SUMMARY OF ACTIVITIES RELATED TO THE ACCEPTANCE OF THE YMP PARTICIPANTS QA PROGRAMS

	ACCEPTANCE ACTIVITIES/BASES	QA PROGRAMS - ACCEPTANCE STATUS		
		LOS ALAMOS	T&MSS	OCRWM
1	QA PROGRAM DOCUMENT ACCEPTED BY NRC (SAFETY EVALUATION LTR.)	11/1/89	8/22/91	12/3/90
2	QA PROGRAM QUALIFICATION AUDIT COMPLETED	90-01 (4/2/90)	90-08 (11/19/90)	90-I-01 (10/26/90)
3	QA REVIEW OF OPEN QA PROGRAM DEFICIENCIES	NO SIGNIFICANT DEFICIENCY	*ONE LEVEL I SDR	* THREE LEVEL I SDRs/CARs
4	QA PROGRAM AFFECTED BY STOP WORK	NO	NO	NO
5	QA AUDIT AND SURV. RESULTS SINCE QUALIFICATION AUDIT, AS APPLICABLE (see Item #2)	SATISFACTORY	NONE PERFORMED SINCE QUALIFICATION AUDIT	SATISFACTORY
6	OCRWM ISSUES QA PROGRAM ACCEPTANCE LETTER TO NRC	1/22/91	1/22/91	12/11/90
	a. EXCEPTIONS TO THE INITIATION OF NEW SITE CHARACTERIZATION ACTIVITIES	NONE	YES NOTE 1, 2 &3	YES NOTE 4 &5
	b. RESOLUTION OF EXCEPTIONS	N/A	8/1/91	**8/21/91
7	NRC ISSUES QA PROGRAM ACCEPTANCE LETTER			
	a. WITH EXCEPTIONS	N/A	N/A	3/11/91
	b. WITH NO EXCEPTIONS	5/29/91	10/9/91	***12/20/91

NOTES:
1. SOFTWARE QA PROGRAM ACCEPTANCE BY YMPO
2. CALIBRATION OPEN DEFICIENCIES
3. INCOMPLETE EFFECTIVENESS DETERMINATION
4. NRC OPEN ISSUES ON OCRWM QA PROGRAM DOCUMENTS
5. QUALIFICATION AUDIT [illegible] RECOMMENDED ACTIONS

* EVALUATED TO HAVE NO SIGNIFICANT IMPACT ON THE OVERALL IMPLEMENTATION OF THE QA PROGRAM

** LETTER ALSO REQUESTED THAT NRC OBJECTION #2 TO THE SCA BE LIFTED

*** THIS LETTER [illegible]

SUMMARY OF ACTIVITIES RELATED TO THE ACCEPTANCE OF THE YMP PARTICIPANTS QA PROGRAMS

	ACCEPTANCE ACTIVITIES/BASES	QA PROGRAMS - ACCEPTANCE STATUS					
		FSN	H&N	LLNL	REECo	SNL	USGS
1	QA PROGRAM DOCUMENT ACCEPTED BY NRC (SAFETY EVALUATION LTR.)	10/24/89	10/3/89	10/24/89	10/3/89	10/24/89	10/24/89
2	QA PROGRAM QUALIFICATION AUDIT COMPLETED	89-01 (4/14/90)	89-02 (4/28/89)	89-06 (6/9/89)	89-05 (9/5/89)	89-03 (9/12/89)	89-04 (8/23/89)
3	QA REVIEW OF OPEN QA PROGRAM DEFICIENCIES	NO SIG. DEFIC.	NO SIG.. DEFIC.	NO SIG. DEFIC.	NO SIG. DEFIC.	*TWO LEVEL I SDR	*ONE LEVEL I SDR
4	QA PROGRAM AFFECTED BY STOP WORK	NO	NO	NO	NO	NO	NO
5	QA AUDIT & SURV. RESULTS SINCE QUALIFICATION AUDIT, AS APPLICABLE (see Item #2)	SATIS.	SATIS.	SATIS.	SATIS.	SATIS.	SATIS.
6	OCRWM ISSUES QA PROGRAM ACCEPTANCE LETTER TO NRC	9/12/90	9/12/90	9/12/90	9/12/90	9/12/90	9/12/90
	a. EXCEPTIONS TO THE INITIATION OF NEW SITE CHARACTERIZATION ACTIVITIES	YES NOTE 1&2	YES NOTE 1&2	NONE	YES NOTE 3	NONE	YES NOTE 3
	*NOTE: NOW RSN						
	b. RESOLUTION OF EXCEPTIONS	8/1/91		N/A	6/17/91	N/A	6/3/91
7	NRC ISSUES QA PROGRAM ACCEPTANCE LETTER						
	a. WITH EXCEPTIONS	10/24/90	10/24/90	N/A	10/24/90	N/A	10/24/90
	b. WITH NO EXCEPTIONS	1/27/92	1/27/92	10/24/90	8/15/91	10/24/90	8/16/91

NOTES:
1. INCOMPLETE PROCUREMENT PROCEDURES
2. SOFTWARE QA PROGRAM ACCEPTANCE BY YMPO

* EVALUATED TO HAVE NO SIGNIFICANT IMPACT ON THE OVERALL IMPLEMENTATION OF THE QA PROGRAM

TECHNICAL DATA WORKSHOP

Yucca Mountain Project

Parameter Dictionary

Gail Heitland
Science Applications International Corporation
Phone: (303) 279-7242

TDB DEVELOPMENT PROBLEMS

1. Values for parameters not reported in consistent units.

2. Variety of abbreviations used when reporting data.

3. Inconsistencies in data, probably attributed to round-off errors.

4. Supporting information frequently omitted. (i.e., test conditions, test methods, test date, uncertainties of data.)

5. Time delay for the actual entry of data into the TDB after receipt of data from participants.

6. Which component of the TDB should the data reside?

NO FORMAT STANDARDS!

PARAMETER DICTIONARY DEVELOPMENT HISTORY

(Page 1 of 2)

Technical Data Advisory Group (TDAG) Meeting - January 1991

- Identified need for a Parameter Dictionary.

Parameter Dictionary Workshop - April 1991

- Developed requirements, purpose, identified users, identified input sources, functional description.
- Included representatives from Project TDB, Paratrac staff, and information management.

PARAMETER DICTIONARY DEVELOPMENT HISTORY

(Page 2 of 2)

Parameter Normalization Technical Data Working Group

- June 27, 1991

  Included representatives from SNL, LANL, LLNL, USGS and SAIC.

  Paratrac normalization, Paratrac use, Parameter Dictionary.

- July 17, 1991

  Provided comments on Paratrac's normalized parameters.

- August 22, 1991

  Scott Sinnock lead on developing strawman list of normalized parameters.

- September 26, 1991

  Reviewed Scott's list and agreed to approach.

- February 4, 1992

  Decided Scott's list was ready to be used as basis of Parameter Dictionary.

PARAMETER DICTIONARY

DEFINITION:

An organized repository of information that establishes format standards for data transmissions to the Project TDB.

PARAMETER DICTIONARY

PURPOSE:

1. Provide direction as to the presentation of technical data for submittal to the Project TDB.
    - Parameter nomenclature
    - Classification
    - Format
    - TDB component identification
    - Aliases
2. Single point of control for the identification and definition of all technical data to be included within the Project TDB.
3. Provide a reference for retrieving data from the Project TDB.
4. Ensure consistency among and between project TDB components.

PARAMETER DICTIONARY

SCOPE:

- All data to be included in Project's TDB
- Data acquired from site characterization activities, socioeconomic and environmental assessment activities, and "thermodynamic/geochemical" data used in geochemical modeling codes.

j:\word2\bcitland.vg

PARAMETER DICTIONARY

INITIAL RELEASE

MODIFIED SCOPE:

- Trench 14 Activities
- Midway Valley Activities
- Test Prioritization Task Activities
- Existing TDB Data
- Selected activities from the Project Status Report
- Selected parameters from the Environmental Assessment and Socioeconomic Programs
- Data to be acquired or submitted to the Project TDB during FY92.

PARAMETER SOURCES

SCPB

Study Plans

Radiological Monitoring Plan

Meteorological Monitoring Plan

Transportation Activities Document

Socioeconomic Plan

Environmental Field Activity Plans

- Air Quality
- Water Resources
- Terrestrial Ecosystems
- Archaeological
- Native American Component
- Soil Studies

RESPONSIBILITIES

- U.S. Geological Survey
- Sandia National Laboratories
- EG & G
- Lawrence Livermore National Laboratory
- DOE/Information Resource Management
- Technical and Management Support Services
- TRW Environmental Safety
- Los Alamos National Laboratory
- Pacific Northwest Laboratory
- Lawrence Berkeley Laboratory
- Raytheon Services Nevada

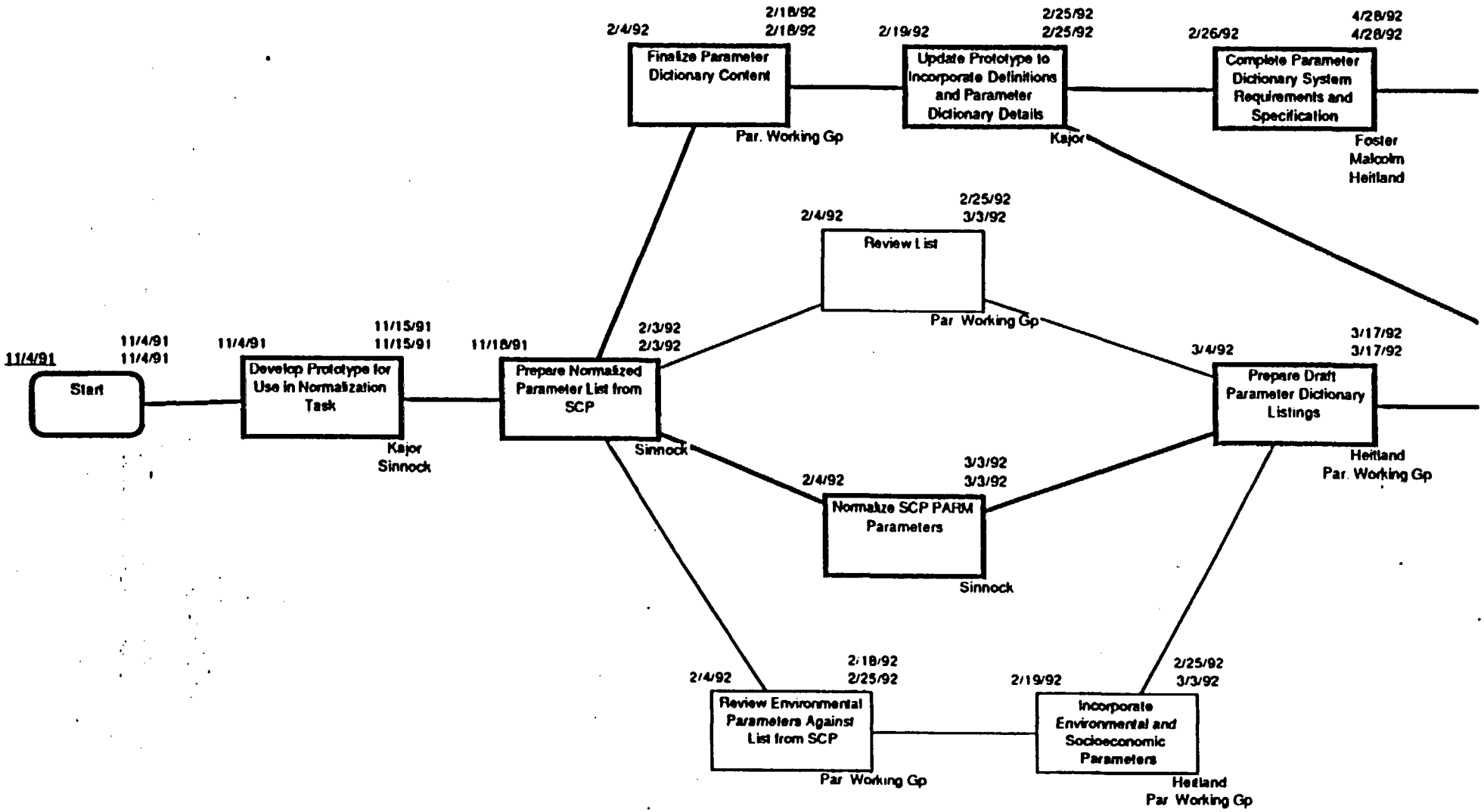
11/4/91
Start
11/4/91
11/4/91
11/4/91
Develop Prototype for Use in Normalization Task
Kajor
Sinnock
11/15/91
11/15/91
11/18/91
Prepare Normalized Parameter List from SCP
Sinnock
2/3/92
2/3/92
2/4/92
Finalize Parameter Dictionary Content
Par. Working Gp
2/18/92
2/18/92
2/19/92
Update Prototype to Incorporate Definitions and Parameter Dictionary Details
Kajor
2/25/92
2/25/92
2/26/92
Complete Parameter Dictionary System Requirements and Specification
Foster
Malcolm
Heitland
4/28/92
4/28/92
2/4/92
Review List
Par Working Gp
2/25/92
3/3/92
2/4/92
Normalize SCP PARM Parameters
Sinnock
3/3/92
3/3/92
3/4/92
Prepare Draft Parameter Dictionary Listings
Heitland
Par. Working Gp
3/17/92
3/17/92
2/4/92
Review Environmental Parameters Against List from SCP
Par Working Gp
2/18/92
2/25/92
2/19/92
Incorporate Environmental and Socioeconomic Parameters
Heitland
Par Working Gp
2/25/92
3/3/92

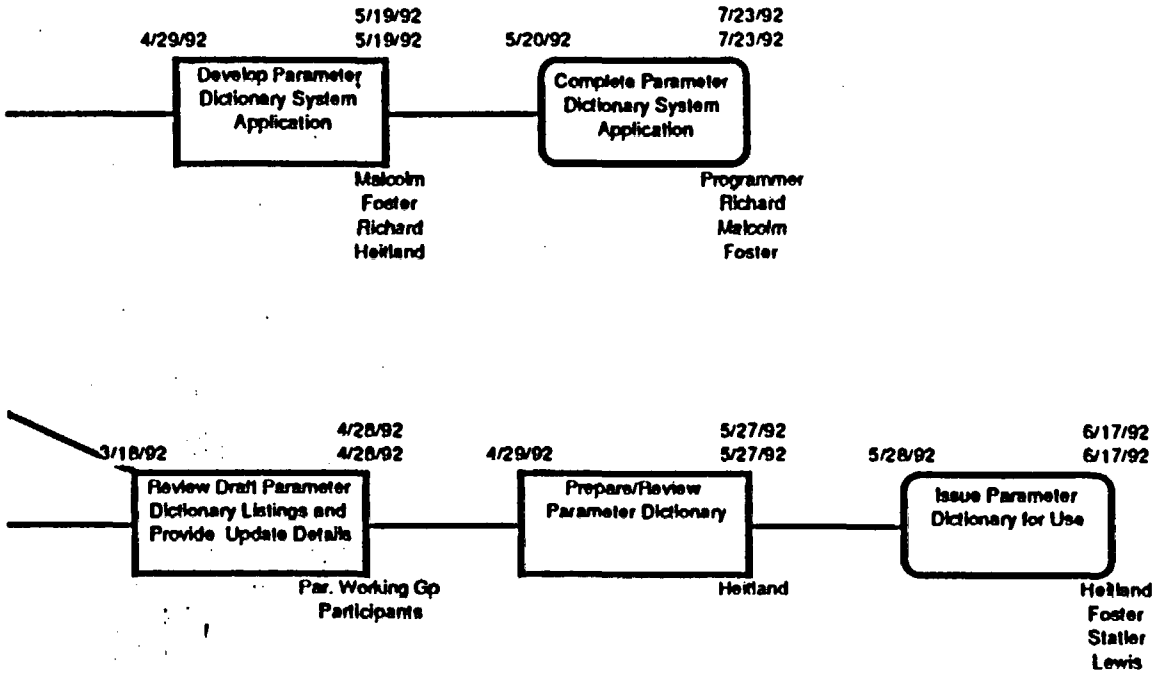
4/29/92
5/19/92
5/19/92
Develop Parameter Dictionary System Application
Malcolm Foster Richard Heitland
5/20/92
7/23/92
7/23/92
Complete Parameter Dictionary System Application
Programmer Richard Malcolm Foster
3/18/92
4/28/92
4/28/92
Review Draft Parameter Dictionary Listings and Provide Update Details
Par. Working Gp Participants
4/29/92
5/27/92
5/27/92
Prepare/Review Parameter Dictionary
Heitland
5/28/92
6/17/92
6/17/92
Issue Parameter Dictionary for Use
Heitland Foster Statler Lewis

OBJECTIVES

1. Ensure modified list of normalized parameters is correct based upon current Project priorities.

2. Develop meaningful parameter definitions.

3. Ensure the reference to the SCP activity or governing plan number is correct.

4. Define parameter format standards, including units, measurement system, conversion factors and type of data fields.

5. Specify aliases.

6. Provide a recommendation on the TDB component most appropriate for maintaining the data values.

PARAMETER SCREEN

PARAMETER NAME: Atmospheric Pressure

PARAMETER NUMBER: 559

PARAMETER CATEGORY: Meteorological Empirical Parameters

PARAMETER CATAGORY NUMBER:

SCP ACTIVITY OR GOVERNING PLAN NUMBER: 8.3.1.2.1.1.1, 8.3.1.2.2.6.1, Meteorological Monitoring Plan (DOE/NV/10270-5)

ALIASES: Barometric Pressure

DEFINITION: The force per unit area exerted by the atmosphere.

TDB COMPONENT: GENISES

FORMAT STANDARDS (Parameter formats must adhere to the following standards):

PARAMETER UNITS: millibars
MEASUREMENT SYSTEM FOR PARAMETER UNITS: Metric
TYPE OF DATA FIELDS:

- Parameter - numeric
- Parameter Units of Measure - text
- Location Information:
  - Latitude (deg, min, sec) - text
  - Longitude (deg, min, sec) - text
  - Monitoring Station Name - text
  - Altitude of monitoring station - numeric
  - Units of measure for altitude - text
- Derivation Information:
  - Date of collection - date
  - Collection time of day - time

LOCATION UNITS: degrees, minutes, seconds
MEASUREMENT SYSTEM FOR LOCATION UNITS: geographic

ABBREVIATIONS: mbar (millibar)

CONVERSION FACTORS:

SUPPORTING INFORMATION DESCRIPTIONS (Provide the following information, as appropriate):

LOCATION INFORMATION:
- unique identifier (i.e., Fortymile Wash, Drillhole Name)
- spatial coordinates

DERIVATION INFORMATION:

conditions (i.e., test conditions)
type (test, observation, or calculation)
method (i.e., test procedure reference)
date (i.e., sample collection date, test date, test time of day)

UNCERTAINTIES:
significant figures
+/- percentage

PARAMETER SCREEN

PARAMETER NAME: Direct Solar Radiation

PARAMETER NUMBER:

PARAMETER CATEGORY: Meteorological Empirical Parameters

PARAMETER CATEGORY NUMBER:

SCP ACTIVITY OR GOVERNING PLAN NUMBER: Meteorological Monitoring Plan (DOE/NV/10270-5)

ALIASES:

DEFINITION: That portion of the radiant energy received directly from the sun.

TDB COMPONENT: GENISES

FORMAT STANDARDS (Parameter formats must adhere to the following standards):

PARAMETER UNITS: Watts/square meter
MEASUREMENT SYSTEM FOR PARAMETER UNITS: Metric
TYPE OF DATA FIELDS:

- Parameter - numeric
- Parameter units of measure - text
- Location Information
  - latitude (deg, min, sec) - text
  - longitude (deg, min, sec) - text
  - Monitoring Station ID - text
- Derivation Information
  - Date of collection - date
  - Collection time of day - time

LOCATION UNITS: degrees, minutes, seconds
MEASUREMENT SYSTEM FOR LOCATION UNITS: geographic

ABBREVIATIONS: W/m*2 (Watts/square meter)

CONVERSION FACTORS:

SUPPORTING INFORMATION DESCRIPTIONS (Provide the following information, as appropriate):

LOCATION INFORMATION:
- unique identifier (i.e., Fortymile Wash, Drillhole Name)
- spatial coordinates

DERIVATION INFORMATION:
- conditions (i.e., test conditions)

type (test, observation, or calculation)
method (i.e., test procedure reference)
date (i.e., sample collection date, test date, test time of day)

UNCERTAINTIES:
significant figures
+/- percentage

PARAMETER SCREEN

PARAMETER NAME: Rock Density, Bulk

PARAMETER NUMBER: 60

PARAMETER CATAGORY: Stratigraphic Physical Properties

PARAMETER CATAGORY NUMBER:

SCP ACTIVITY OR GOVERNING PLAN #: 8.3.1.2.2.3.1, 8.3.1.2.1.3.2, 8.3.1.2.2.4.4, 8.3.1.2.2.4.5, 8.3.1.2.2.4.10, 8.3.1.5.2.1.5

ALIASES: Density, Rock Matrix

DEFINITION: The weight of the rock divided by its volume, including the volume of its pore spaces.

TDB COMPONENT: GENESIS

FORMAT STANDARDS: (Parameter formats must adhere to the following standards.)

PARAMETER UNITS: grams/cubic centimeter
MEASUREMENT SYSTEM FOR PARAMETER UNITS: Metric
TYPE OF DATA FIELDS:

- Parameter - numeric
- Parameter units of measure - text
- Location Information
  - Drillhole name for the data - text
  - Sample ID - text
  - Depth in hole from which sample originates - numeric
  - Unit of measure for depth - text
- Derivation Information
  - Test number of multiple tests on the same interval or sample - numeric
  - Testing method used to determine parameter value - text
  - Sample temperature and units of measure during test - text
  - Sample pressure and units of measure of sample tested - text
  - Sample length and units of measure of sample tested - text
  - Sample diameter and units of measure of sample tested - text
  - Sample mass and units of measure of sample tested - text
  - Saturation state of sample during test - text

LOCATION UNITS: meters
MEASUREMENT SYSTEM FOR LOCATION UNITS: Metric

ABBREVIATIONS: g/cm*3 (grams/cubic centimeter), m (meters), C (degrees Celsius)

CONVERSION FACTORS:

SUPPORTING INFORMATION DESCRIPTIONS: (Provide the following information, as appropriate.)

LOCATION INFORMATION:
- unique identifier (i.e., Fortymile Wash, Drillhole Name)
- spatial coordinates

DERIVATION INFORMATION:
- conditions (i.e., test conditions)
- type (test, observation, or calculation)
- method (i.e., test procedure reference)
- date (i.e., sample collection date, test date, test time of day)

UNCERTAINTIES:
- significant figures
- +/- percentage

PARAMETER SCREEN

PARAMETER NAME: Hydraulic Transmissivity

PARAMETER NUMBER: 411

PARAMETER CATAGORY: Subsurface Hydrology

PARAMETER CATAGORY NUMBER:

SCP ACTIVITY OR GOVERNING PLAN #: 8.3.1.2.2.4.7, 8.3.1.2.1.3.2

ALIASES:

DEFINITION: The rate at which water of the prevailing kinematic viscosity is transmitted through a unit width of the aquifer under a unit hydraulic gradient.

TDB COMPONENT: GENISES

FORMAT STANDARDS (Parameter formats must adhere to the following standards):

PARAMETER UNITS: square meters/second
MEASUREMENT SYSTEM FOR PARAMETER UNITS: Metric
TYPE OF DATA FIELDS:

- Parameter - numeric
- Parameter units of measure - text
- Location Information
  - Drillhole name for the data - text
  - Sample ID - text
  - Top of depth interval which measurement represents - numeric
  - Bottom of depth interval which measurement represents - numeric
  - Unit of measure for the interval - text
- Derivation Information
  - Test number of multiple tests on the same interval or sample - numeric
  - Testing method used to determine parameter value - text
  - Method of analysis for transmissivity value -text
  - Test episode if several test are grouped into episodes - text
  - Indicator and value for any ranges in parameter - text
  - Rate at which water was pumped from the test well - text
  - Amount of water pumped for the test - text

Amount of deviation from best fit of test analysis - text

LOCATION UNITS: meters
MEASUREMENT SYSTEM FOR LOCATION UNITS: Metric

ABBREVIATIONS: m*2 (square meters), s (second)

CONVERSION FACTORS:

SUPPORTING INFORMATION DESCRIPTIONS (Provide the following information, as appropriate):

LOCATION INFORMATION:
- unique identifier (i.e., Fortymile Wast, Drillhole Name)
- spatial coordinates

DERIVATION INFORMATION:
- conditions (i.e., test conditions)
- type (test, observation, or calculation)
- method (i.e., test procedure reference)
- date (i.e., sample collection date, test date, test time of day)

UNCERTAINTIES:
- significant figures
- +/- percentage

Background

WHO: PARAMETER NORMALIZATION TEAM

WHAT: DEVELOP CONSISTENT NOMENCLATURE

WHEN: OCTOBER 91 - AUGUST(?) 92

HOW: ADVANCED REVELATION "Mini" DATABASE

WHY: BRING ORDER OUT OF CHAOS

WHY

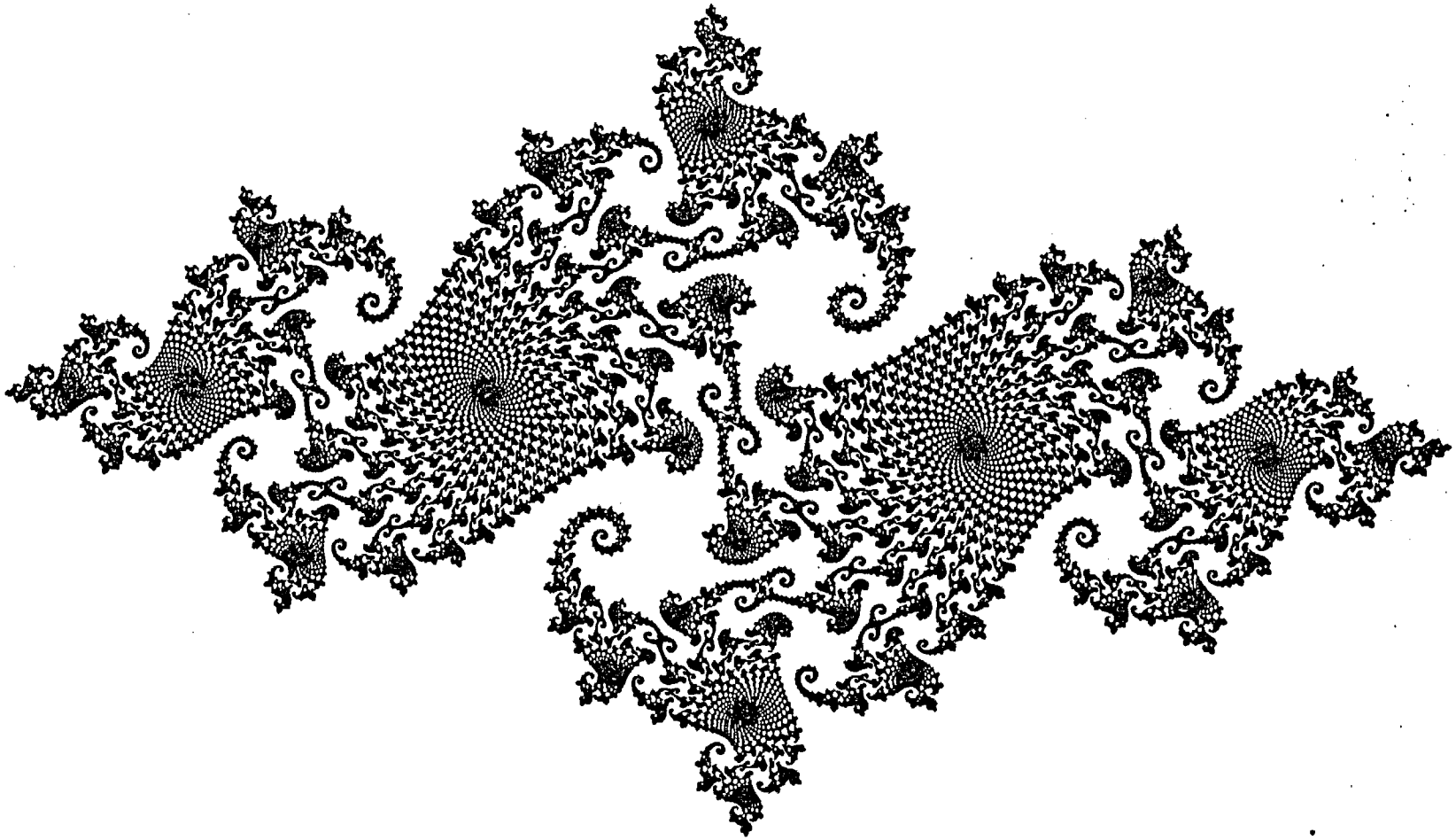

History of Program Progress

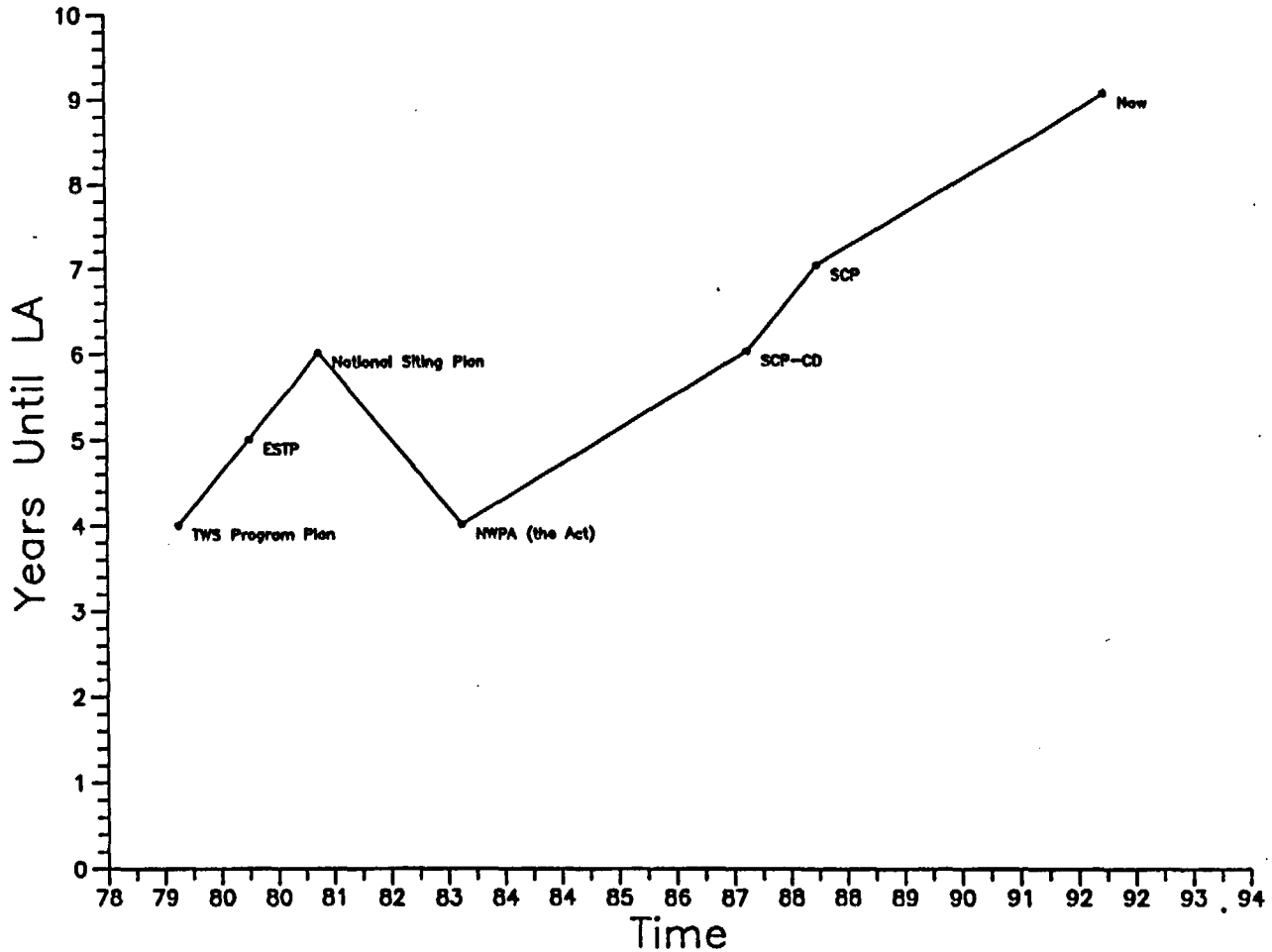

What Is A Parameter?

SOMETHING WITH MEASUREMENT UNITS OR DIMENSIONS

AMENABLE TO DATABASE TABULATION OR GIS DISPLAY

EXAMPLES:	Porosity	L^3/L^3
	Fault Offset	L
	Drift Diameter	L
	Drift Ventilation Velocity	L/T

What Are MGDS Parameters?

TECHNICAL BASELINE (Site Characterization Planning Basis)

PERFORMANCE ALLOCATION TABLES, SCP CHAPTER 8

ABOUT 6000 "PARAMETERS"

- ~ 4000 Site (PARATRAC)
- ~ 2000 Design and PA (SCP-PARM)

Parameter Selection Process

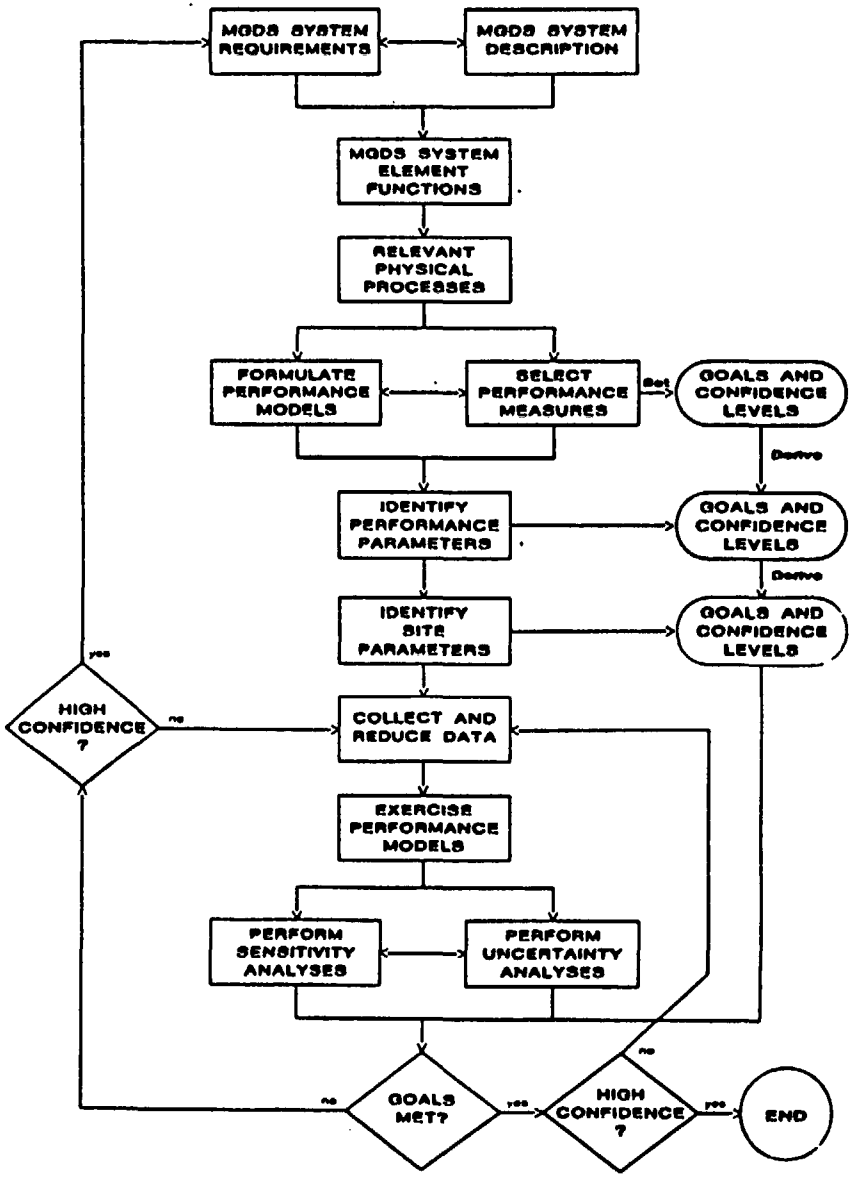

Goals

Collect Sufficient Data For Site Evaluation

Do It Efficiently

Normalization Status

4000 SITE "DATA-COLLECTION" PARAMETERS CULLED TO 700

- 350 "Empirical" Parameters
- 250 Model Output Parameters
- 100 Experimental Conditions and Others

2000 DESIGN AND PA "REQUESTED" PARAMETERS CULLED TO 800

- 100 "Empirical" Parameters
- 400 Model Output Parameters
- 200* Design Parameters
- 100* Sociological, Demographic Parameters

* Not Incorporated in Advanced Revelation

"EMPIRICAL" PARAMETERS

1.0 GEOLOGICAL
- 1.1 Structural
- 1.2 Stratigraphic
- 1.3 Tectonic
- 1.4 Seismic
- 1.5 Surface Morphology

2.0 HYDROLOGICAL
- 2.1 Surface
- 2.2 Subsurface

3.0 GEOCHEMICAL
- 3.1 Rock Chemistry
- 3.2 Water Chemistry
- 3.3 Retardation Potential

4.0 METEOROLOGICAL

5.0 NATURAL RESOURCES
- 5.1 Mineral and Energy Resources
- 5.2 Water Resources

6.0 WASTE CHARACTERISTICS

MODEL PARAMETERS

11.0 SITE GENETIC (HISTORICAL) MODELS

- 11.1 Geological History
- 11.2 Hydrological History

12.0 SITE PREDICTIVE MODELS

- 12.1 Geological Predictions
- 12.2 Hydrological Predictions
- 12.3 Geochemical Predictions

13.0 SITE PROCESS MODELS

- 13.1 Geological Conceptual Models
- 13.2 Hydrological Conceptual Models
- 13.3 Geochemical Conceptual Models
- 13.4 Meteorological Conceptual Models

LABORATORY CONDITIONS

9.0 THERMODYNAMIC AND EXPERIMENTAL REATIONS

9.1 Thermodynamic Data for Minerals, Gases, Aqueous Species
9.2 Reaction Conditions: Mineral Stability Experiments
9.3 Reaction Conditions: Solubility Experiments
9.4 Reaction Conditions: Dynamic Transport Experiments
9.5 Reaction Conditions: 1 and 2 Phase Flow Experiments

1 GEOLOGICAL PARAMETERS

1. 1 Structural Parameters

7	fault geometry, attitude	strike and dip
13	fault geometry, displacement	m
14	fault geometry, length	m
8	fault geometry, locations	map coordinates
15	fault geometry, zonal width	m
10	fault type, genetic	descriptive (normal, detachment)
11	fault type, geometric	descriptive (imbricate, brecciated)
16	fold geometry, axis attitude	strike and dip
17	fold geometry, axis length	m
18	fold geometry, axis locations	map coordinates
19	fold geometry, axis plunge	degrees
23	fracture geometry, attitude	strike and dip
24	fracture geometry, connectivity	(?)
25	fracture geometry, dimensions	(?)
30	fracture geometry, frequency (density)	number/m
27	fracture geometry, length (persistence)	m
28	fracture geometry, surface profile	m
29	fracture geometry, width	m
31	fracture roughness	(?)
32	fracture type, genetic	descriptive (tect, cool, drill)
20	rock-unit contact attitude	strike and dip

1. 2 Stratigraphic Parameters

1. 2. 1 Stratigraphic Geometry

40	rock-unit contact altitude	m above msl
42	rock-unit contact type, genetic	descriptive
43	rock-unit contact type, geometric	descriptive
45	rock-unit facies, chemical	descriptive
46	rock-unit facies, lithologic	descriptive
47	rock-unit facies, mineral	descriptive
48	rock-unit facies, property	descriptive

1. 2. 2 Stratigraphic Physical Properties

60	rock density, bulk	g/cc
61	rock density, grain	g/cc
62	rock density, relative	(?)
56	rock electrical conductivity	(?)
57	rock electrical intensity	(?)
58	rock electrical potential, spontaneous	(?)
59	rock electrical resistivity	ohms (?)
63	rock magnetic declination	degrees
64	rock magnetic inclination	degrees
65	rock magnetic intensity	gauss
66	rock magnetic polarity	+ or -
67	rock magnetic susceptibility	(?)
125	rock moisture content	decimal
126	rock moisture saturation	decimal
68	rock porosity	decimal
70	rock porosity, void ratio	dimensionless
71	rock radiation, gamma ray intensity	ci/s (?)
72	rock radiation, radon emanation	ci/s (?)
69	rock strength	(?)
73	rock strength, cohesive	(?)
74	rock strength, compressibility	m/pascal (?)
75	rock strength, compressive	pascals
77	rock strength, deformation modulus	pascals
78	rock strength, dynamic	(?)
79	rock strength, friction angle	degress to stress
80	rock strength, friction angle, internal	degress to stress
81	rock strength, friction coefficient	(?)
82	rock strength, Poisson's ratio	dimensionless
83	rock strength, residual	(?)
84	rock strength, shear	pascals
85	rock strength, stability	(?)
86	rock strength, stiffness	pascals (?)
88	rock strength, strain ratio	dimensionless
89	rock strength, tensile	pascals
90	rock strength, toughness	(?)
91	rock strength, Young's modulus	pascals
92	rock thermal conductivity	watts/m/degree
93	rock thermal expansion	m/degree

Model and Data Collection Pyramid

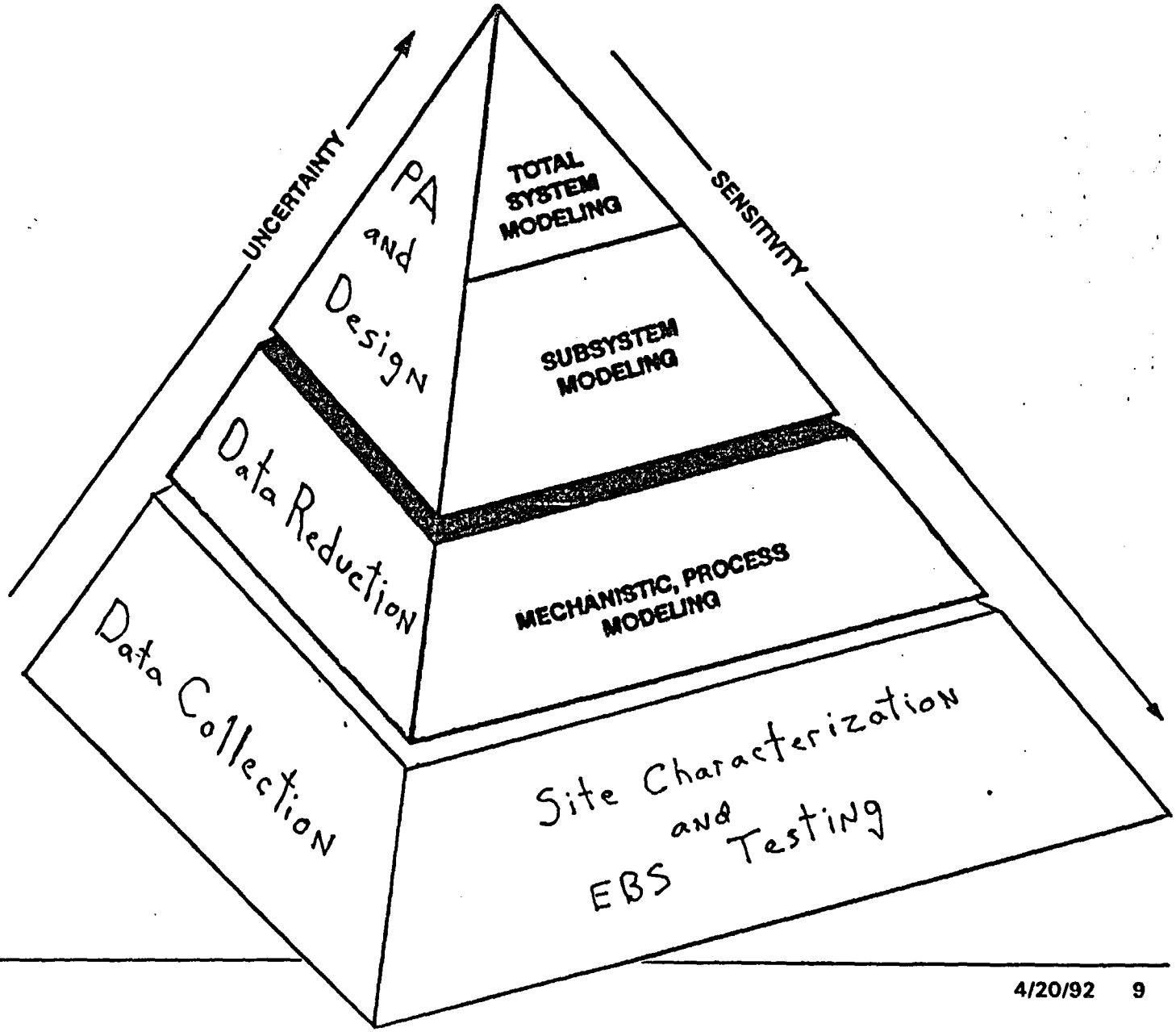

Planned Activities

COMPLETE TRANSFER OF PARATRAC AND SCP-PARM TO ADVANCED REVELATION

- Parameters
- Geometric Descriptors
- SCP Activity Pointers

MERGE SCP "ACM" TABLES WITH NORMALIZED LISTS

- Bruce Hastings' HyperCard Lists

ADD MODEL HIERARCHY TO PARAMETER-FLOW LOGIC

- Identify and Classify Models in Hierarchy
- Identify Input and Output Parameter