Westinghouse

Westinghouse Electric Company
Nuclear Power Plants
P.O. Box 355
Pittsburgh, Pennsylvania 15230-0355
USA

U.S. Nuclear Regulatory Commission
Document Control Desk
Washington, D.C. 20555

Direct tel: 412-374-5355
Direct fax: 412-374-5456
e-mail: corletmm@westinghouse.com

Your ref: Docket No. 52-006
Our ref: DCP/NRC1586

May 7, 2003

SUBJECT: Transmittal of Westinghouse Responses to US NRC Requests for Additional Information on the AP1000 Application for Design Certification

This letter transmits the Westinghouse responses to NRC Requests for Additional Information (RAI) regarding our application for Design Certification of the AP1000 Standard Plant. A list of the RAI responses that are transmitted with this letter is provided in Attachment 1. Attachment 2 provides the RAI responses.

Please contact me if you have questions regarding this submittal.

Very truly yours,

M. M. Corletti
Passive Plant Projects & Development
AP600 & AP1000 Projects

/Attachments

1. Table 1, "List of Westinghouse's Responses to RAIs Transmitted in DCP/NRC1586"
2. Westinghouse Non-Proprietary Response to US Nuclear Regulatory Commission Requests for Additional Information dated May 2003

3065alf

D063

DCP/NRC1586

May 7, 2003

Attachment 1

"List of Westinghouse's Responses to RAIs Transmitted in DCP/NRC1586"

Attachment 1

Table 1 "List of Westinghouse's Responses to RAIs Transmitted in DCP/NRC1586"
240.005, Rev. 0

DCP/NRC1586

May 7, 2003

Attachment 2

Westinghouse Non-Proprietary Response to US Nuclear Regulatory Commission
Requests for Additional Information dated May 2003

AP1000 DESIGN CERTIFICATION REVIEW

Response to Request For Additional Information

RAI Number: 240.005

Question:

AP1000 DCD Section 2.5 used the AP600 as a guidance. However, this section was not updated to incorporate the rulemaking for Part 100.23. The 1997 rulemaking revised the requirements for information to be provided by a future COL applicant to support its site specific information for demonstrating the suitability of the site. Westinghouse should revise DCD Section 2.5 to address the revised site specific attributes.

Westinghouse Response:

DCD Section 2.5 is being revised to address the changes in requirements for information to be provided by a future COL applicant to support its site specific information for demonstrating the suitability of the site.

Revisions are also included to DCD Tier 1 Chapter 5 and DCD Tier 2 Chapter 2 to address NRC staff comments during the meeting at Westinghouse on April 2-5.

Design Control Document (DCD) Revision:

See proposed revision to DCD Tier 1 Chapter 5 and DCD Tier 2 Chapter 2.

PRA Revision:

None

DCD Tier 1, Section 5 will be modified as follows:

Table 5.0-1 (cont.) Site Parameters		
Soil		
Average Allowable Static Soil Bearing Capacity	Greater than or equal to 8,4600 lb/ft^2 over the footprint of the nuclear island at its excavation depth	
Maximum allowable dynamic bearing capacity for normal plus SSE	**Greater than or equal to 85,000 pounds per square foot at the edge of the nuclear island at its excavation depth**	
Shear Wave Velocity	Greater than or equal to 8000 ft/sec based on low-strain, best-estimate soil properties over the footprint of the nuclear island at its excavation depth	
Liquefaction Potential	None	
Seismic		
Safe Shutdown Earthquake (SSE)	SSE free field peak ground acceleration of 0.30 g at ~~plant grade~~**foundation level of nuclear island** with modified Regulatory Guide 1.60 response spectra (see Figures 5.0-1 and 5.0-2)	
Fault Displacement Potential	None	
Atmospheric Dispersion Factors (X/Q)		
Site Boundary	0- to 2-hour time interval	$\leq 0.6 \times 10^{-3}$ sec/m^3
Low Population Zone Boundary	Annual average	$\leq 2.0 \times 10^{-5}$ sec/m^3
	0 to 8 hours	$\leq 1.35 \times 10^{-4}$ sec/m^3
	8 to 24 hours	$\leq 1.0 \times 10^{-4}$ sec/m^3
	24 to 96 hours	$\leq 5.4 \times 10^{-5}$ sec/m^3
	96 to 720 hours	$\leq 2.2 \times 10^{-5}$ sec/m^3

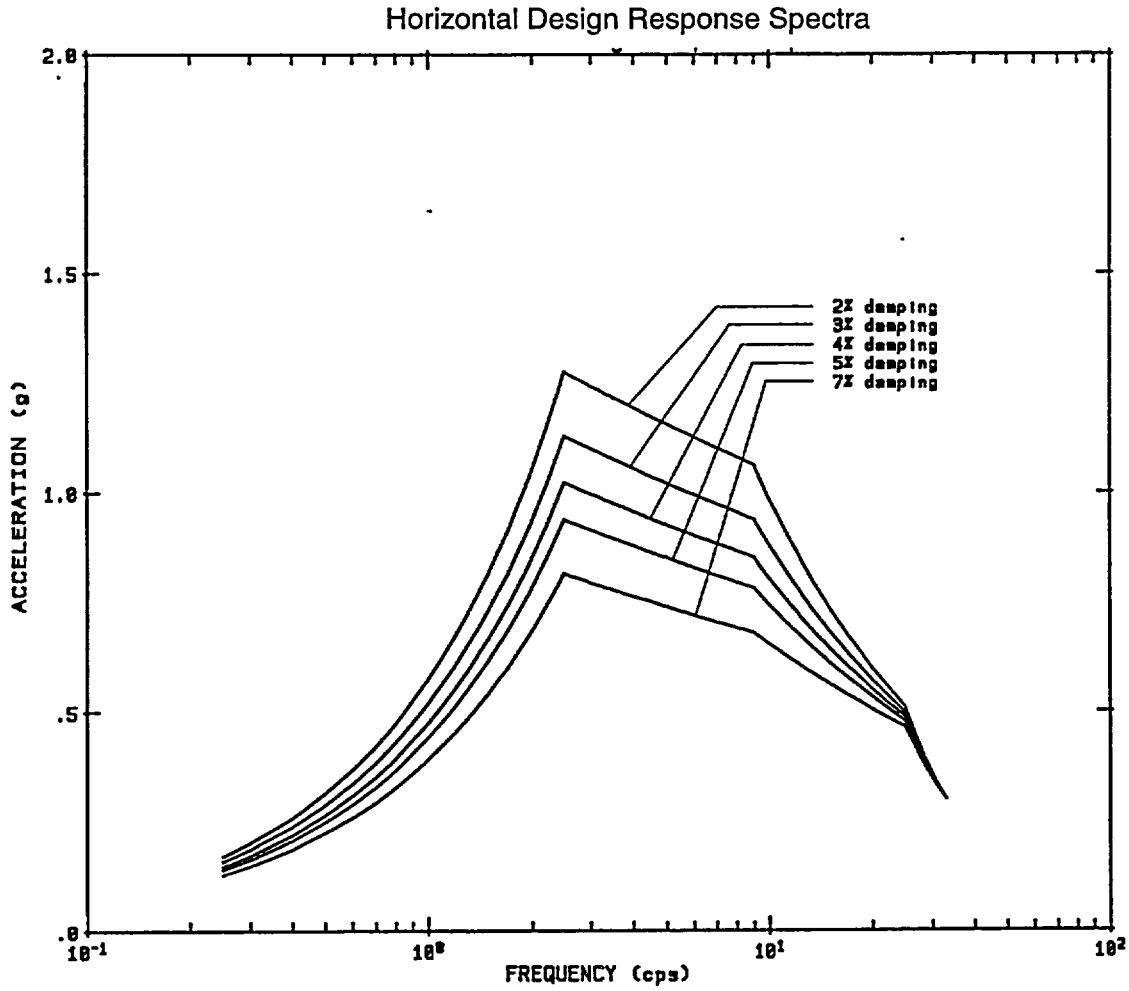

Figure 5.0-1
Horizontal Design Response Spectra
Safe Shutdown Earthquake

~~Note: AP600 and AP1000 seismic inputs are identical~~

Vertical Design Response Spectra

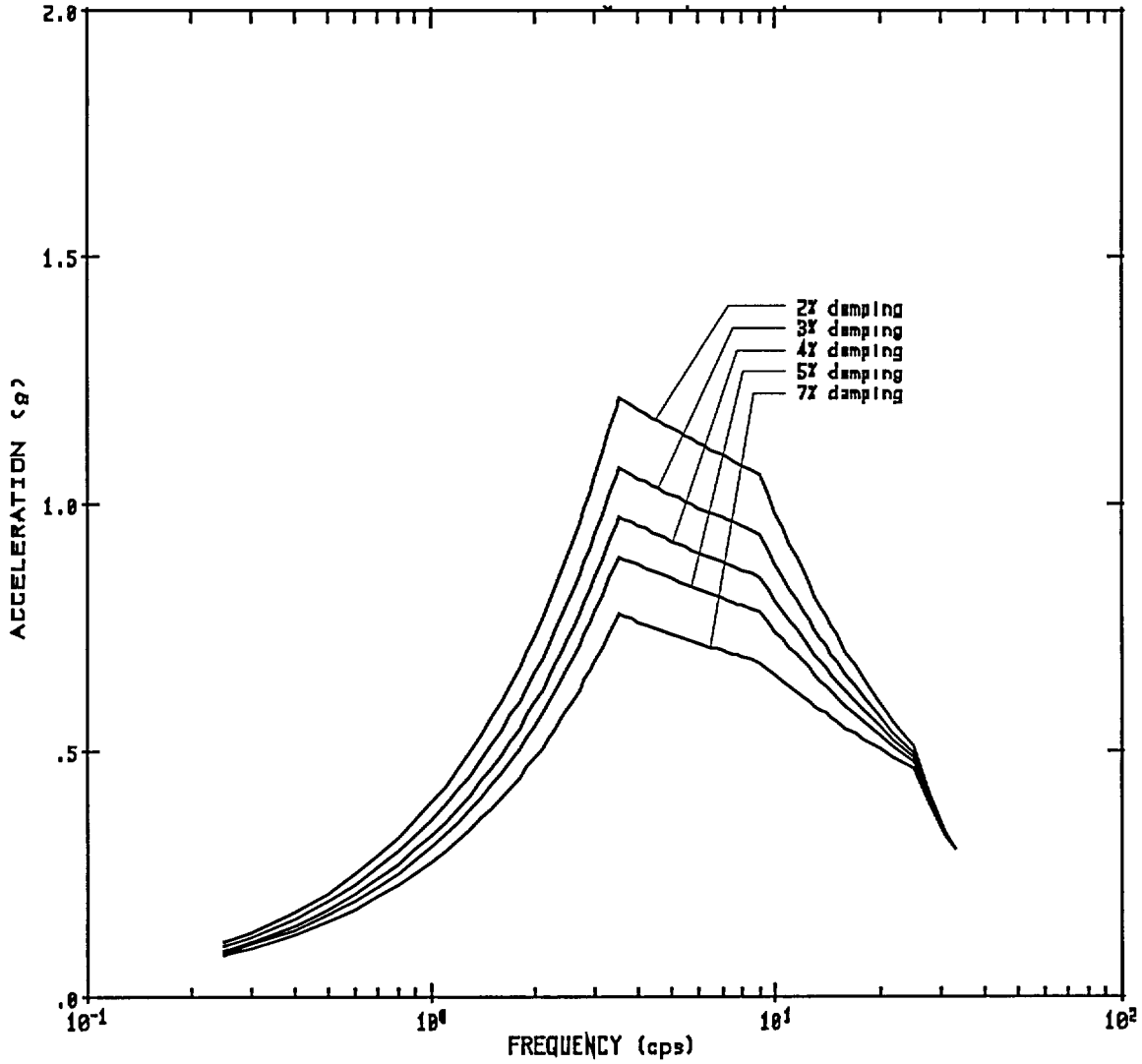

Figure 5.0-2
Vertical Design Response Spectra
Safe Shutdown Earthquake

~~Note: AP600 and AP1000 seismic inputs are identical~~

CHAPTER 2

SITE CHARACTERISTICS

This chapter defines the site-related parameters for which the AP1000 plant is designed. The site parameters are in Table 2-1. These parameters envelope most potential sites in the United States. The sections of this chapter follow the standard format and discuss how the specific parameters are used in the AP1000 design and how the Combined License applicant is to demonstrate that the site meets the design parameters.

The site is acceptable if the site characteristics fall within the AP1000 plant site design parameters in Table 2-1. Should specific site parameters or characteristics be outside the envelope of assumptions established by Table 2-1, the Combined License applicant referencing the AP1000 will demonstrate that the design satisfies the requirements imposed by the specific site parameters and conforms to the design commitments and acceptance criteria described in the AP1000 Design Control Document.

2.1 Geography and Demography

The geography and demography are site specific and will be defined by the Combined License applicant.

2.1.1 Combined License Information for Geography and Demography

Combined License applicants referencing the AP1000 certified design will provide site-specific information related to site location and description, exclusion area authority and control, and population distribution.

Site Information – Site-specific information on the site and its location will include political subdivisions, natural and man-made features, population, highways, railways, waterways, and other significant features of the area.

Exclusion Area – Site-specific information on the exclusion area will include the size of the area and the exclusion area authority and control. Activity that may be permitted within the exclusion area will be included in the discussion.

Population Distribution – Site-specific information will be included on population distribution.

2.2 Nearby Industrial, Transportation, and Military Facilities

The plant has inherent capability to withstand certain types of external accidents due to the specified design conditions associated with earthquakes, wind loading, and radiation shielding. Acceptability for external accidents associated with a given site will be covered in the Combined License application.

Each Combined License applicant referencing the AP1000 will provide analyses of accidents external to the nuclear plant. The determination of the probability of occurrence of potential accidents which could have severe consequences will be based on analyses of available statistical data on the occurrence of the accident together with analyses of the effects of the accident on the plant's safety-related structures and components. If an accident is identified for which the probability of severe consequences is unacceptable, specific changes to the AP1000 will be identified in the Combined License safety analysis report. The criteria for not requiring changes to the AP1000 design is that the total annual frequency of occurrence is less than 10^{-6} per year for an external accident leading to severe consequences. The following accident categories will be considered in determining the frequency of occurrence, as appropriate:

Explosions – Accidents involving detonations of high explosives, munitions, chemicals, or liquid and gaseous fuels will be considered for facilities and activities in the vicinity of the plant where such materials are processed, stored, used, or transported in quantity.

Flammable Vapor Clouds (Delayed Ignition) – Accidental releases of flammable liquids or vapors that result in the formation of unconfined vapor clouds in the vicinity of the plant.

Toxic Chemicals – Accidents involving the release of toxic chemicals from nearby mobile and stationary sources.

Fires – Accidents leading to high heat fluxes or smoke, and to nonflammable gas or chemical-bearing clouds from the release of materials as the consequence of fires in the vicinity of the plant.

Airplane Crashes – Accidents involving aircraft crashes leading to missile impact or fire in the vicinity of the plant.

2.2.1 Combined License Information for Identification of Site-specific Potential Hazards

Combined License applicants referencing the AP1000 certified design will provide site-specific information related to the identification of potential hazards within the site vicinity, including an evaluation of potential accidents and verify that the frequency of site-specific potential hazards is consistent with the criteria outlined in Section 2.2. The site-specific information will provide a review of aircraft hazards, information on nearby transportation routes, and information on potential industrial and military hazards.

2.3 Meteorology

The AP1000 is designed for air temperatures, humidity, precipitation, snow, wind, and tornado conditions as specified in Table 2-1. The Combined License applicant must provide information to demonstrate that the site parameters are within the limits specified for the standard design.

2.3.1 Regional Climatology

The regional climatology is site specific and will be defined by the Combined License applicant.

2.3.2 Local Meteorology

The local meteorology is site specific and will be defined by the Combined License applicant.

2.3.3 Onsite Meteorological Measurement Programs

The onsite meteorological measurement program is site specific and will be defined by the Combined License applicant. The number and location of meteorological instrument towers are determined by actual site parameters.

2.3.4 Short-Term Diffusion Estimates

In the absence of a specific site for use in determining values for short-term diffusion, a study was performed to determine the atmospheric dispersion factors (X/Q values) that would envelope most current plant sites and that could be used to calculate the radiological consequences of design basis accidents. The X/Q values thus derived are provided in Table 2-1.

This set of X/Q values is representative of potential sites for construction of the AP1000. The values are appropriate for analyses to determine the radiological consequences of accidents. These values were determined using meteorological data representative of a 60-70th percentile U.S. site. The values were calculated following guidance in Regulatory Guide 1.145 considering ground release, building wake, and lateral plume meander under stable atmospheric conditions. Site selection is not restricted to those sites bounded by these X/Q values. If a selected site has X/Q values that exceed the reference site values, the accident doses reported in Chapter 15 would be adjusted to reflect the change in X/Q values.

2.3.5 Long-Term Diffusion Estimates

The long-term diffusion estimates are site specific and will be provided by the Combined License applicant. The site boundary annual average X/Q shown in Table 2-1 is used to calculate release concentrations at the site boundary for comparison with the activity release limits defined in 10 CFR 20. The value specified is expected to bound atmospheric conditions at most U.S. sites. If a selected site has a X/Q value that exceeds this reference site value, the release concentrations reported in Section 11.3 would be adjusted proportionate to the change in X/Q.

2.3.6 Combined License Information

2.3.6.1 Regional Climatology

Combined License applicants referencing the AP1000 certified design will address site-specific information related to regional climatology.

2.3.6.2 Local Meteorology

Combined License applicants referencing the AP1000 certified design will address site-specific local meteorology information.

2.3.6.3 Onsite Meteorological Measurements Program

Combined License applicants referencing the AP1000 certified design will address the site-specific onsite meteorological measurements program.

2.3.6.4 Short-Term Diffusion Estimates

Combined License applicants referencing the AP1000 certified design will address the site-specific X/Q values specified in subsection 2.3.4. For a site selected that exceeds the bounding X/Q values, the Combined License applicant will address how the radiological consequences associated with the controlling design basis accident continue to meet the dose reference values given in 10 CFR Part 50.34 and control room operator dose limits given in General Design Criteria 19 using site-specific X/Q values. The Combined License applicant should consider topographical characteristics in the vicinity of the site for restrictions of horizontal and/or vertical plume spread, channeling or other changes in airflow trajectories, and other unusual conditions affecting atmospheric transport and diffusion between the source and receptors. No further action is required for sites within the bounds of the site parameters for atmospheric dispersion.

2.3.6.5 Long-Term Diffusion Estimates

Combined License applicants referencing the AP1000 certified design will address long-term diffusion estimates and X/Q values specified in subsection 2.3.5. The Combined License applicant should consider topographical characteristics in the vicinity of the site for restrictions of horizontal and/or vertical plume spread, channeling or other changes in airflow trajectories, and other unusual conditions affecting atmospheric transport and diffusion between the source and receptors. No further action is required for sites within the bounds of the site parameter for atmospheric dispersion.

2.4 Hydrologic Engineering

The AP1000 is designed for a normal groundwater elevation up to plant elevation 98′ and for a flood level up to plant elevation 100′. For structural analysis purposes, grade elevation is also established as plant elevation 100′. Actual grade will be a few inches lower to prevent surface water from entering doorways.

For a portion of the annex building the site grade will be 107 feet to permit truck access at the elevation of the floor in the annex building and inside containment. Subsection 3.4.1 describes design provisions for groundwater and flooding.

The Combined License applicant will evaluate events leading to potential flooding to demonstrate that the site meets the site parameter for flood level. As necessary, the Combined License applicant may propose measures to protect the plant according to the Standard Review Plan, Section 2.4.10. Events to be considered are those identified in Standard Review Plan, Section 2.4.2.

Adverse effects of flooding due to high water or ice effects do not have to be considered for site-specific nonsafety-related structures and water sources outside the scope of the certified design.

Flooding of water intake structures, cooling canals, or reservoirs or channel diversions would not prevent safe operation of the plant.

2.4.1 Combined License Information

2.4.1.1 Hydrological Description

Combined License applicants referencing the AP1000 certified design will describe major hydrologic features on or in the vicinity of the site including critical elevations of the nuclear island and access routes to the plant.

2.4.1.2 Floods

Combined License applicants referencing the AP1000 certified design will address the following site-specific information on historical flooding and potential flooding factors, including the effects of local intense precipitation.

- Probable Maximum Flood on Stream and Rivers – Site-specific information that will be used to determine the design basis flooding at the site. This information will include the probable maximum flood on streams and rivers.
- Dam Failures – Site-specific information on potential dam failures.
- Probable Maximum Surge and Seiche Flooding – Site-specific information on probable maximum surge and seiche flooding.
- Probable Maximum Tsunami Loading – Site-specific information on probable maximum tsunami loading.
- Flood Protection Requirements – Site-specific information on flood protection requirements or verification that flood protection is not required to meet the site parameter for flood level.

No further action is required for sites within the bounds of the site parameter for flood level.

2.4.1.3 Cooling Water Supply

Combined License applicants will address the water supply sources to provide makeup water to the service water system cooling tower.

2.4.1.4 Groundwater

Combined License applicants referencing the AP1000 certified design will address site-specific information on groundwater. No further action is required for sites within the bounds of the site parameter for ground water.

2.4.1.5 Accidental Release of Liquid Effluents in Ground and Surface Water

Combined License applicants referencing the AP1000 certified design will address site-specific information on the ability of the ground and surface water to disperse, dilute, or concentrate accidental releases of liquid effluents. Effects of these releases on existing and known future use of surface water resources will also be addressed.

2.4.1.6 Emergency Operation Requirement

Combined License applicants referencing the AP1000 certified design will address any flood protection emergency procedures required to meet the site parameter for flood level.

2.5 Geology, Seismology, and Geotechnical Engineering

Combined License applicants referencing the AP1000 certified design will address site specific information related to basic geological, seismological, and geotechnical engineering of the site and the region, as discussed in the following subsections.

2.5.1 Basic Geological and Seismic Combined License Information

Combined License applicants referencing the AP1000 certified design will address the following **regional and** site-specific geological~~, and~~ seismological**, and geophysical** information **as well as conditions caused by human activities:**

~~□Regional and site physiography~~
~~□Geomorphology~~
~~□Stratigraphy~~
~~□Lithology~~
~~□Structural geology~~
~~□Tectonics~~
~~□Seismicity~~

- **Structural geology of the site**
- **Seismicity of the site**
- **Geological history**
- **Evidence of paleoseismicity**
- **Site stratigraphy and lithology**
- **Engineering significance of geological features**
- **Site groundwater conditions**

2.5.2 Vibratory Ground Motion

The AP1000 is designed for a safe shutdown earthquake (SSE) defined by a peak ground acceleration (PGA) of 0.30g and the design response spectra specified in subsection 3.7.1.1,

Figures 3.7.1-1 and 3.7.1-2. The AP1000 design response spectra were developed using the Regulatory Guide 1.60 response spectra as the base and modified to address high frequency amplification effects observed in eastern North America earthquakes. The peak ground accelerations in the two horizontal and the vertical directions are equal.

2.5.2.1 Combined License Seismic and Tectonic Characteristics Information

Combined License applicants referencing the AP1000 certified design will address the following site-specific information related to **the vibratory ground motion aspects** ~~seismic and tectonic characteristics~~ of the site and region:

~~□Correlation of earthquake activity with geologic structure or tectonic provinces~~
~~□Maximum earthquake potential~~
~~□Seismic wave transmission characteristics of the site~~
~~□Safe shutdown earthquake (SSE) ground response spectra~~

- **Seismicity**
- **Geologic and tectonic characteristics of site and region**
- **Correlation of earthquake activity with seismic sources**
- **Probabilistic seismic hazard analysis and controlling earthquakes**
- **Seismic wave transmission characteristics of the site**
- **Safe shutdown earthquake ground motion**

The Combined License applicant must demonstrate that the proposed site meets the following requirements:

- The free field peak ground acceleration at the foundation level is less than or equal to a 0.30g safe shutdown earthquake.

- The site design response spectra at the foundation level in the free-field are less than or equal to those given in Figures 3.7.1-1 and 3.7.1-2.

2.5.2.2 Site-Specific Seismic Structures

The AP1000 includes all seismic Category I structures, systems and components in the scope of the design certification.

2.5.3 Surface Faulting Combined License Information

Combined License applicants referencing the AP1000 certified design will address **the following** surface and subsurface geological, **seismological,** and geophysical information ~~including~~ **related to** the potential for surface or near-surface faulting affecting the site:~~.~~

- **Geological, seismological, and geophysical Investigations**
- ~~Geological evidence, or absence of evidence, for surface deformation~~

- **Correlation of earthquakes with capable tectonic sources**
- **Ages of most recent deformation**
- **Relationship of tectonic structures in the site area to regional tectonic structures**
- **Characterization of capable tectonic sources**
- **Designation of zones of quaternary deformation in the site region**
- **Potential for surface tectonic deformation at the site**

2.5.4 Stability and Uniformity of Subsurface Materials and Foundations

Combined License applicants referencing the AP1000 certified design will address the following site specific information related to the stability and uniformity of subsurface materials and foundations.

- Excavation
- Bearing capacity
- Settlement
- Liquefaction
- ~~Subsurface uniformity~~

Seismic analysis and foundation design for rock sites is described in Sections 3.7 and 3.8. The AP1000 certified design is based on the nuclear island being founded on rock. Soils may be present above the foundation level.

2.5.4.1 Excavation

Excavation in soil for the nuclear island structures below grade will establish a vertical face with lateral support of the adjoining undisturbed soil or rock. One alternative is to use a soil nailing method. Soil nailing is a method of retaining earth in-situ. As the nuclear island excavation progresses vertically downward, holes are drilled horizontally into the adjoining undisturbed soil, a metal rod is inserted into the hole, and grout is pumped into each hole to fill the hole and to anchor the "nail" rod.

As each increment of the nuclear island excavation is completed, nominal eight to ten inch diameter holes are drilled horizontally through the vertical face of the excavation into adjacent undisturbed soil. These "nail" holes, spaced horizontally and vertically on five to six feet centers, are drilled

slightly downward to the horizontal. A "nail", normally a metal bar/rod, is center located for the full length of the hole. The nominal length of soil nails are 60 percent to 70 percent of the wall height, depending upon soil conditions. The hole is filled with grout to anchor the rod to the soil. A metal face plate is installed on the exposed end of the rod at the excavated wall vertical surface. Welded wire mesh is hung on the wall surface for wall reinforcement and secured to the soil nail face plates for anchorage. A 4,000 psi to 5,000 psi non-expansive pea gravel shotcrete mix is blown onto the wire mesh to form a nominal four to six inch thick soil retaining wall. Installation of the soil retaining wall closely follows the progress of the excavation and is from the top down, with each wire mesh-reinforced, shotcreted wall section being supported by the soil "nails" and the preceding elevations of soil nailed wall placements. The shotcrete contains a crystalline waterproofing material as described in subsection 3.4.1.1.1.

Soil nailing as a method of soil retention has been successfully used on excavations up to 55 feet deep on projects in the U.S. Soils have been retained for up to 90 feet in Europe. The state of California CALTRANS uses soil nailing extensively for excavations and soil retention installations. Soil nailing design and installation has a successful history of application which is evidenced by its excellent safety record.

The soil nailing method produces a vertical surface down to the bottom of the excavation and is used as the outside forms for the exterior walls below grade of the nuclear island. Concrete is placed directly against the vertical concrete surface of the excavation.

For excavation in rock and for methods of soil retention other than soil nailing, four to six inches of shotcrete are blown on to the vertical surface. The concrete for the exterior walls is placed against the shotcrete. The shotcrete contains a crystalline waterproofing material as described in subsection 3.4.1.1.1.

2.5.4.2 Bearing Capacity

The maximum bearing reaction on the hard rock determined from the analyses described in subsection 3.8.5.1 is less than 85,000 pounds per square foot under all combined loads including the safe shutdown earthquake. Bearing capacity at a hard rock site will exceed this demand.

2.5.4.3 Settlement

Settlement at a hard rock site is small and is not significant to the design of the AP1000. The AP1000 does not rely on structures, systems, or components located outside the nuclear island to provide safety-related functions. Differential settlement between the nuclear island foundation and

the foundations of adjacent buildings does not have an adverse effect on the safety-related functions of structures, systems, and components. Differential settlement under the nuclear island foundation could cause the basemat and buildings to tilt. Much of this settlement occurs during civil construction prior to final installation of the equipment. Differential settlement of a few inches across the width of the nuclear island would not have an adverse effect on the safety-related functions of structures, systems, and components.

2.5.4.4 Liquefaction

The Combined License applicant will demonstrate that the potential for liquefaction is negligible.

2.5.4.5 ~~Subsurface Uniformity~~Deleted

~~The Combined License applicant will demonstrate the effects on soil structure interaction and foundation design of the uniformity of the soil or rock below the foundation.~~

~~Considerations with respect to the materials underlying the nuclear island are the type of site, such as rock or soil, and whether the site can be considered uniform. If the site is nonuniform, the nonuniform soil characteristics such as the location and profiles of soft and hard spots should be considered. These considerations can be assessed with the information developed in response to Regulatory Guides 1.132 and 1.138. The geological investigations of subsections 2.5.1 and 2.5.4.6.1 provide information on the uniformity of the site.~~

~~A survey of 22 commercial nuclear power plant sites in the United States focused on site parameters that affect the seismic response such as the depth to bedrock, type and characteristic of the soil layers, including the variation of shear wave velocities, the depth to the ground water level, and the embedment depth of the plant structures. Of the 22 sites, 11 are rock sites where competent rock exists at relatively shallow depths. At the other sites, the depth to bedrock varies from about 50 feet (Callaway) to well in excess of 4,000 feet (South Texas). A review of these 11 soil sites, all of which are marine, deltaic, or lacustrine deposits, did not reveal any significant variation of soil characteristics below the nuclear island footprint. There was one possible nonuniform site, Monticello, which is underlain by glacial deposits; the geologic description is such that there might be lateral variability in the foundation parameters within the plan dimension of the plant. The review of the 22 commercial nuclear power plant sites in the United States suggests that the majority of AP1000 sites exhibit "uniform" soil properties within the nuclear island footprint.~~

~~2.5.4.5.1 Site Investigation for Uniform Sites~~

~~For sites that are expected to be uniform, based on the geologic investigation outlined in subsections 2.5.1 and 2.5.4.6.2, Appendix C to Regulatory Guide 1.132 provides guidance on the spacing and depth of borings of the geotechnical investigation for safety related structures. Specific language in the Regulatory Guide suggests a spacing of 100 feet supplemented with borings on the periphery and at the corners for favorable, uniform geologic conditions.~~

~~For foundation engineering purposes, a series of primary borings should be drilled on a grid pattern that encompasses the nuclear island footprint and 40 feet beyond the boundaries of the nuclear island~~

~~footprint. The 40-foot extension for the grid of borings is established from a Boussinesq analysis of the zone of influence of the foundation mat which shows that the net change in the effective vertical overburden stress is less than seven percent at a distance of 40 feet from the edge of the foundation mat. The grid need not be of equal spacing in the two orthogonal directions, but it should be oriented in accordance with the true dip and strike of the rock in the immediate area of the nuclear island footprint. If geologic conditions are such that true dip and strike are not obvious, or if the dip is practically flat, then the orientation of the grid can be consistent with the major orthogonal lines of the nuclear island. The spacing of the borings on the grid should be on the order of 50 to 60 feet. For example, an acceptable grid could have 5 borings in the short direction and 7 borings in the long direction, resulting in 35 primary borings to cover the nuclear island footprint and 40 feet beyond. The depth of borings should be determined on the basis of the geologic conditions. Borings should be extended to a depth sufficient to define the site geology and to sample materials that may swell during excavation, may consolidate subsequent to construction, may be unstable under earthquake loading, or whose physical properties would affect foundation behavior or stability. At least one-fourth of the primary borings should penetrate sound rock or, for a deep soil site, to a maximum depth of 250 feet below the foundation mat. At this depth of 250 feet the change in the vertical stress during or after construction for the combined foundation loading is less than 10 percent of the in-situ effective overburden stress. Other primary borings may terminate at a depth of 160 feet below the foundation (equal to the width of the structure).~~

~~**2.5.4.5.2 Site Investigation for Non-uniform Sites**~~

~~At sites that are determined to be non-uniform or potentially non-uniform during the course of the geological investigations outlined in subsections 2.5.1 and 2.5.4.6.2, the investigation effort is extended to determine if the site is acceptable for an AP1000. The following paragraphs identify the site geotechnical investigations required to demonstrate that the site is acceptable.~~

~~As the AP1000 foundation/structural system is robust, the probability of being able to show compliance for all but the worst of sites is high, unless liquefaction or faulting is prevalent on the site. As stated in Regulatory Guide 1.132, where variable conditions are found, spacing of boreholes should be smaller, as needed, to obtain a clear picture of soil or rock properties and their variability. Where cavities or other discontinuities of engineering significance may occur, the normal exploratory work should be supplemented by secondary borings or soundings at a spacing small enough to detect such features. The depth of the secondary borings is 160 feet below the foundation mat. At this depth, the maximum change in vertical stress during or after construction is about 11 percent of the in-situ effective overburden stress. The depth of borings should be extended beyond 160 feet if the geologic investigation indicates the possible presence of karst conditions, under-consolidated clays, loose sands, intrusive dikes or other forms of geologic impacts at depth greater than 160 feet.~~

~~To provide guidance for the site investigation of non-uniform sites, three non-uniform cases are described that might occur for nuclear plants. For each of these cases, the type of site investigation is described.~~

~~**Sloping Bedrock Site**~~

~~The sloping bedrock site as shown on Figure 2.5-2 is typical for a river-front site where in the geologic past the bedrock has been eroded to a valley slope and then the valley was subsequently filled with alluvium. The bedding in the rock is nearly horizontal, but the surface of the rock is sloping on a strike parallel to the direction of the river. The shear wave velocity of the uniform soil layer overlying rock may vary between 1,000 and 2,500 feet per second. The shear wave velocity of 3,500 feet per second for the bedrock is representative of sites with a sloping rock surface. Sites where the bedrock has much higher shear wave velocities are not likely to exhibit such conditions.~~

~~Investigations for a site with a sloping bedrock surface must define the depth to bedrock as a function of plan location and the shear wave velocity of the overlying soil and bedrock. More borings may be necessary than required for a uniform site in order to establish the variation in depth to bedrock within the nuclear island footprint.~~

~~**Undulatory Bedrock Site**~~

~~An undulatory bedrock site as shown in Figure 2.5-3 is one where the bedding planes in the bedrock are (or nearly) horizontal but the surface is undulatory. Such a situation may occur if the bedrock surface is an erosion surface in a marine or lake environment. Another example might be a limestone site overlain by saprolite as in the southeast United States. The undulations could be the result of differential weathering or by soft zones associated with solution activity in the limestone.~~

~~Investigations for a site with an undulatory bedrock surface associated with weathering or karst condition must define the depth to bedrock as a function of plan location and the shear wave velocity of the overlying soil and bedrock. For cases with the overlying soil layer between the foundation level and the bedrock less than 40 feet, the pattern dimensions of the undulations must be defined with borings, specifically the width and depth of the undulations. Boring spacing on the order of 10 feet may be required for undulations having dimensions on the order of 20 feet in order to establish the variation in depth to bedrock within the nuclear island footprint.~~

~~**Geologically Impacted Site**~~

~~A geologically impacted site as shown on Figure 2.5-4 is one where the bedrock has abrupt facies change or has been interrupted either by a fault (shear zone) or by an intrusive such as a dike. This leads to the possibility of lateral variation in the bedrock properties affecting soil structure interaction and bearing pressure. Three subcases are identified. The first type includes an abrupt facies change. The second type has a shear zone of varying width and position. The third case is an intrusive dike of very competent rock compared to the surrounding rock.~~

~~Investigations for a geologically impacted site must define the width of the zone of the higher (or lower) shear wave velocity. The location of the zone of higher (or lower) shear wave velocity must be determined in relation to the center of containment. The azimuths of the bounding postulated vertical planes of the higher (or lower) shear wave velocity must be determined.~~

~~The zone of the higher (or lower) shear wave velocity is shown in Figure 2.5-4 bounded by non-curvilinear vertical parallel planes. It is recognized that such a situation is highly unlikely in nature. In order to define the width and location of the zone of higher (or lower) shear wave velocity, the spacing of the borings will have to be on the order of 10 feet for a zone with a width of 20 feet. It may be more practical to trench the site to locate and define the dimensions and locations of the intrusive or shear zone, thus eliminating many of the borings that would otherwise be required.~~

2.5.4.6 Combined License Information

Combined License applicants referencing the AP1000 design will address the following site specific information related to the geotechnical engineering aspects of the site. No further action is required for sites within the bounds of the site parameters.

2.5.4.6.1 Site and Structures – Site-specific information regarding the underlying site conditions and geologic features will be addressed. This information will include site topographical features, as well as the locations of seismic Category I structures.

2.5.4.6.2 The Combined License applicant will establish the properties of the foundation soils to be within the range considered for design of the nuclear island basemat.

Properties of Underlying Materials – A determination of the static and dynamic engineering properties of foundation soils and rocks in the site area will be addressed. This information will include a discussion of the type, quantity, extent, and purpose of field explorations, as well as logs of borings and test pits. Results of field plate load tests, field permeability tests, and other special field tests (e.g., bore-hole extensometer or pressuremeter tests) will also be provided. Results of geophysical surveys will be presented in tables and profiles. Data will be provided pertaining to site-specific soil layers (including their thicknesses, densities, moduli, and Poisson's ratios) between the basemat and the underlying rock stratum. Plot plans and profiles of site explorations will be provided.

Properties of Materials Adjacent to Nuclear Island Exterior Walls – A determination of the static and dynamic engineering properties of the surrounding soil will be made to demonstrate they are competent and provide passive earth pressures greater than or equal to those used in the seismic stability evaluation for sliding of the nuclear island. Seismic stability requirements are satisfied if the soil layers adjacent to the nuclear island foundation are composed predominantly of rock, or sand and rock (gravel), or sands that can be classified as medium to dense (standard penetration test having greater than 10 blows per foot). If the soil adjacent to the exterior walls is made up of clay, sand and clay, or other types of soil other than those classified above as competent, then the Combined License applicant will evaluate the seismic stability against sliding as described in subsection 3.8.5.5.3 using the site-specific soil properties, or ensure that the soils have properties that exceed the following:

- Submerged soil density of 60 pounds/ft^3
- Angle of internal friction of 32 degrees

Laboratory Investigations of Underlying Materials – Information about the number and type of laboratory tests and the location of samples used to investigate underlying materials will be provided. Discussion of the results of laboratory tests on disturbed and undisturbed soil and rock samples obtained from field investigations will be provided.

2.5.4.6.3 Excavation and Backfill – Information concerning the extent (horizontal and vertical) of seismic Category I excavations, fills, and slopes, if any will be addressed. The sources, quantities, and static and dynamic engineering properties of borrow materials will be described in the site-specific

application. The compaction requirements, results of field compaction tests, and fill material properties (such as moisture content, density, permeability, compressibility, and gradation) will also be provided. Information will be provided concerning the specific soil retention system, for example, the soil nailing system, including the length and size of the soil nails, which is based on actual soil conditions and applied construction surcharge loads. **If backfill is to be placed adjacent to the exterior walls of the nuclear island, information will be provided concerning compaction of the backfill and any additional loads on the exterior walls of the nuclear island.** Information will also be provided on the waterproofing system along the vertical face and the mudmat.

2.5.4.6.4 Ground Water Conditions – Groundwater conditions will be described relative to the foundation stability of the safety-related structures at the site. The soil properties of the various layers under possible groundwater conditions during the life of the plant will be compared to the range of values assumed in the standard design in Table 2-1.

2.5.4.6.5 Deleted

[This page intentionally blank]

2.5.4.6.6 Liquefaction Potential – Soils under and around seismic Category I structures will be evaluated for liquefaction potential for the site specific SSE ground motion. This should include justification of the selection of the soil properties, as well as the magnitude, duration, and number of excitation cycles of the earthquake used in the liquefaction potential evaluation (e.g., laboratory tests, field tests, and published data). Liquefaction potential will also be evaluated to address seismic margin.

2.5.4.6.7 **Bearing Capacity – The Combined License applicant will verify that the site-specific allowable soil bearing capacities for static and dynamic loads are equal to or greater than the values documented in Table 2-1.~~Deleted~~**

2.5.4.6.8 Earth Pressures – The Combined License applicant will describe the design for static and dynamic lateral earth pressures and hydrostatic groundwater pressures acting on plant safety-related facilities using soil parameters as evaluated in previous subsections.

2.5.4.6.9 Soil Properties for Seismic Analysis of Buried Pipes – The AP1000 does not utilize safety related buried piping. No additional information is required on soil properties.

2.5.4.6.10 Static and Dynamic Stability of Facilities – Soil characteristics affecting the stability of the nuclear island will be addressed including foundation rebound, settlement, and differential settlement.

2.5.4.6.11 Subsurface Instrumentation – Data will be provided on instrumentation, if any, proposed for monitoring the performance of the foundations of the nuclear island. This will specify the type, location, and purpose of each instrument, as well as significant details of installation methods. The location and installation procedures for permanent benchmarks and markers for monitoring the settlement will be addressed.

2.5.5 Combined License Information for Stability of Slopes

Combined License applicants referencing the AP1000 design will address site-specific information about the static and dynamic stability of soil and rock slopes, the failure of which could adversely affect the nuclear island.

2.5.6 Combined License Information for Embankments and Dams

Combined License applicants referencing the AP1000 design will address site-specific information about the static and dynamic stability of embankments and dams, the failure of which could adversely affect the nuclear island.

Table 2-1 (Sheet 1 of 2)

SITE PARAMETERS

Air Temperature	
Maximum Safety [a]	115°F dry bulb/80°F coincident wet bulb 81°F wet bulb (noncoincident)
Minimum Safety [a]	-40°F
Maximum Normal [b]	100°F dry bulb/77°F coincident wet bulb 80°F wet bulb (noncoincident) [d]
Minimum Normal [b]	-10°F
Wind Speed	
Operating Basis	145 mph (3 second gust); importance factor 1.15 (safety), 1.0 (nonsafety); exposure C; topographic factor 1.0
Tornado	300 mph
Seismic	
SSE	0.30g peak ground acceleration [c]
Fault Displacement Potential	None
Soil	
Average allowable static bearing capacity	**Greater than or equal to 8,600 pounds per square foot over the footprint of the nuclear island at its excavation depth**
Maximum allowable dynamic bearing capacity for normal plus SSE	**Greater than or equal to 85,000 pounds per square foot at the edge of the nuclear island at its excavation depth**
Shear Wave Velocity	Greater than or equal to 8000 ft/sec based on low-strain best-estimate soil properties over the footprint of the nuclear island at its excavation depth
Liquefaction Potential	None

Table 2-1 (Sheet 2 of 2)

SITE PARAMETERS

Missiles	
Tornado	4000 - lb automobile at 105 mph horizontal, 74 mph vertical 275 - lb, 8 in. shell at 105 mph horizontal, 74 mph vertical 1 inch diameter steel ball at 105 mph horizontal and vertical
Flood Level	Less than plant elevation 100′
Ground Water Level	Less than plant elevation 98′
Plant Grade Elevation	Less than plant elevation 100′ except for portion at a higher elevation adjacent to the annex building
Precipitation	
Rain	19.4 in./hr (6.3 in./5 min)
Snow/Ice	75 pounds per square foot on ground with exposure factor of 1.0 and importance factors of 1.2 (safety) and 1.0 (non-safety)
Atmospheric Dispersion Values - X/Q[e]	
Site boundary (0-2 hr)	$\leq 0.60 \times 10^{-3}$ sec/m^3
Site boundary (annual average)	$\leq 2.0 \times 10^{-5}$ sec/m^3
Low population zone boundary	
0 - 8 hr	$\leq 1.35 \times 10^{-4}$ sec/m^3
8 - 24 hr	$\leq 1.0 \times 10^{-4}$ sec/m^3
24 - 96 hr	$\leq 5.4 \times 10^{-5}$ sec/m^3
96 - 720 hr	$\leq 2.2 \times 10^{-5}$ sec/m^3
Population Distribution	
Exclusion area (site)	0.5 mi

Notes:

(a) Maximum and minimum safety values are based on historical data and exclude peaks of less than 2 hours duration.

(b) Maximum and minimum normal values are the 1 percent exceedance magnitudes.

(c) With ground response spectra (at **foundation level of nuclear island**~~plant grade~~) as given in Figures 3.7.1-1 and 3.7.1-2.

(d) The noncoincident wet bulb temperature is applicable to the cooling tower only.

(e) For AP1000, the terms "site boundary" and "exclusion area boundary" are used interchangeably. Thus, the X/Q specified for the site boundary applies whenever a discussion refers to the exclusion area boundary.

Figure 2.5-1 DELETED

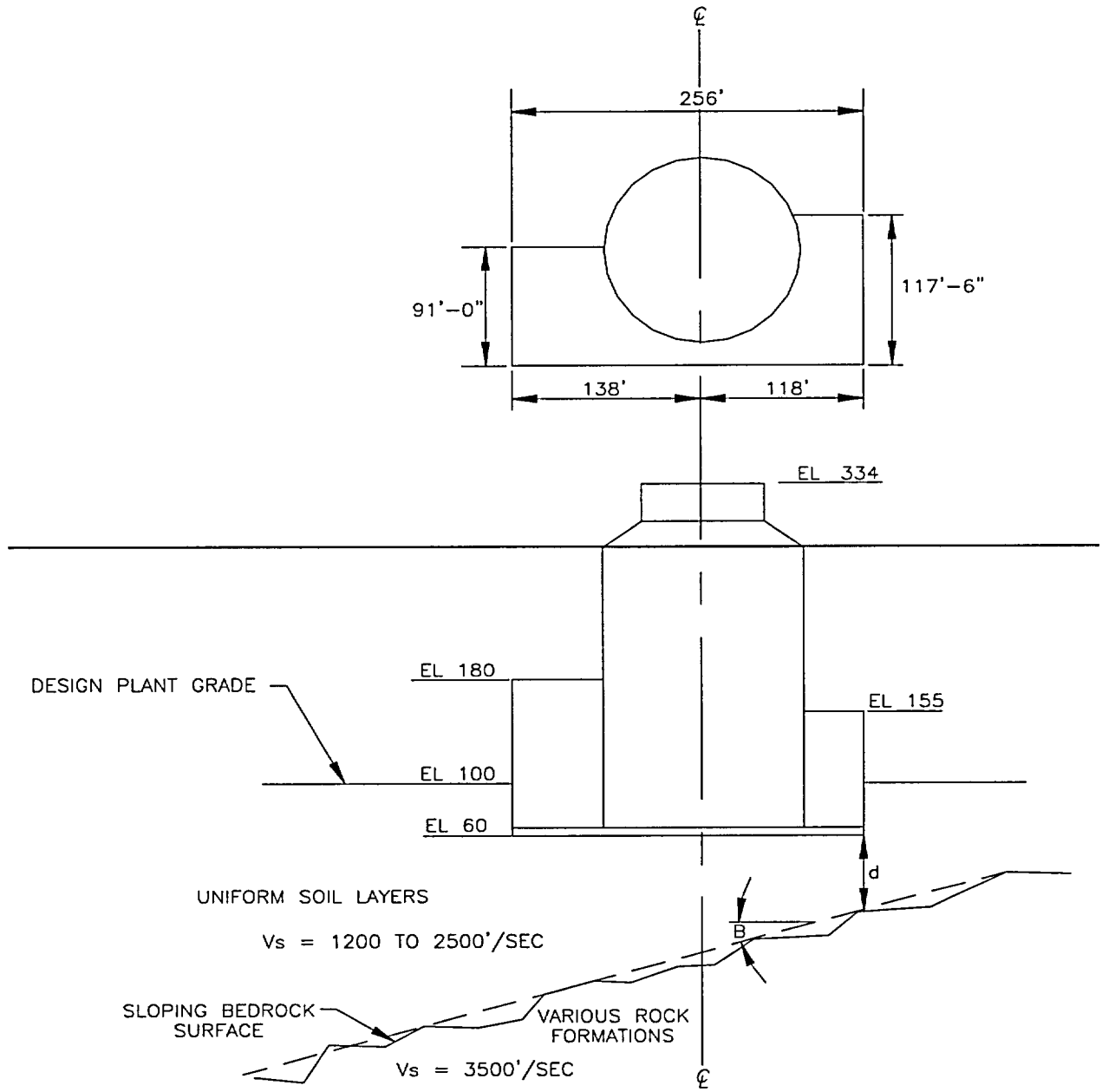

~~Figure 2.5-2~~

~~Sloping Bedrock~~

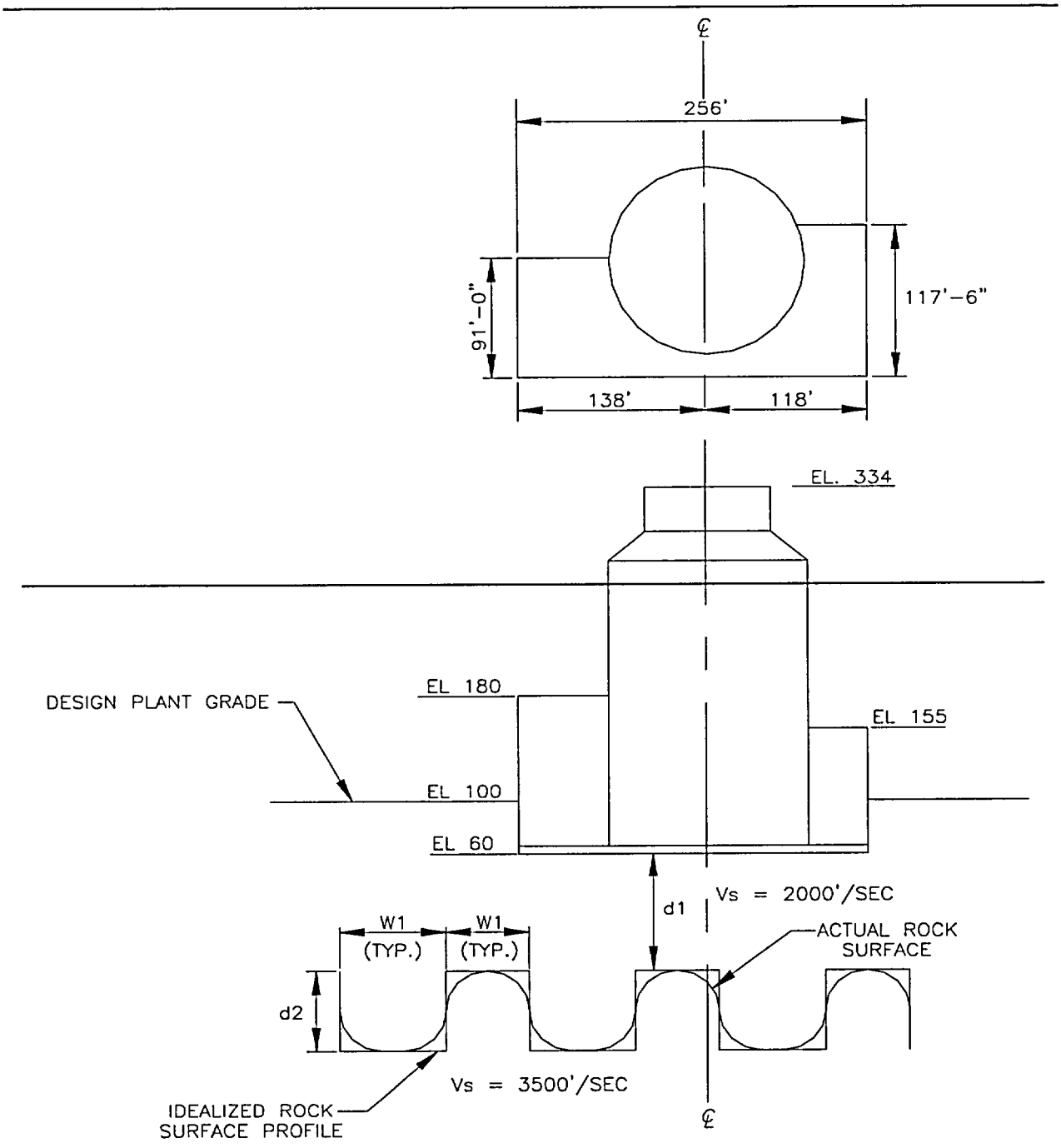

~~Figure 2.5-3~~

~~Undulating Bedrock Site~~

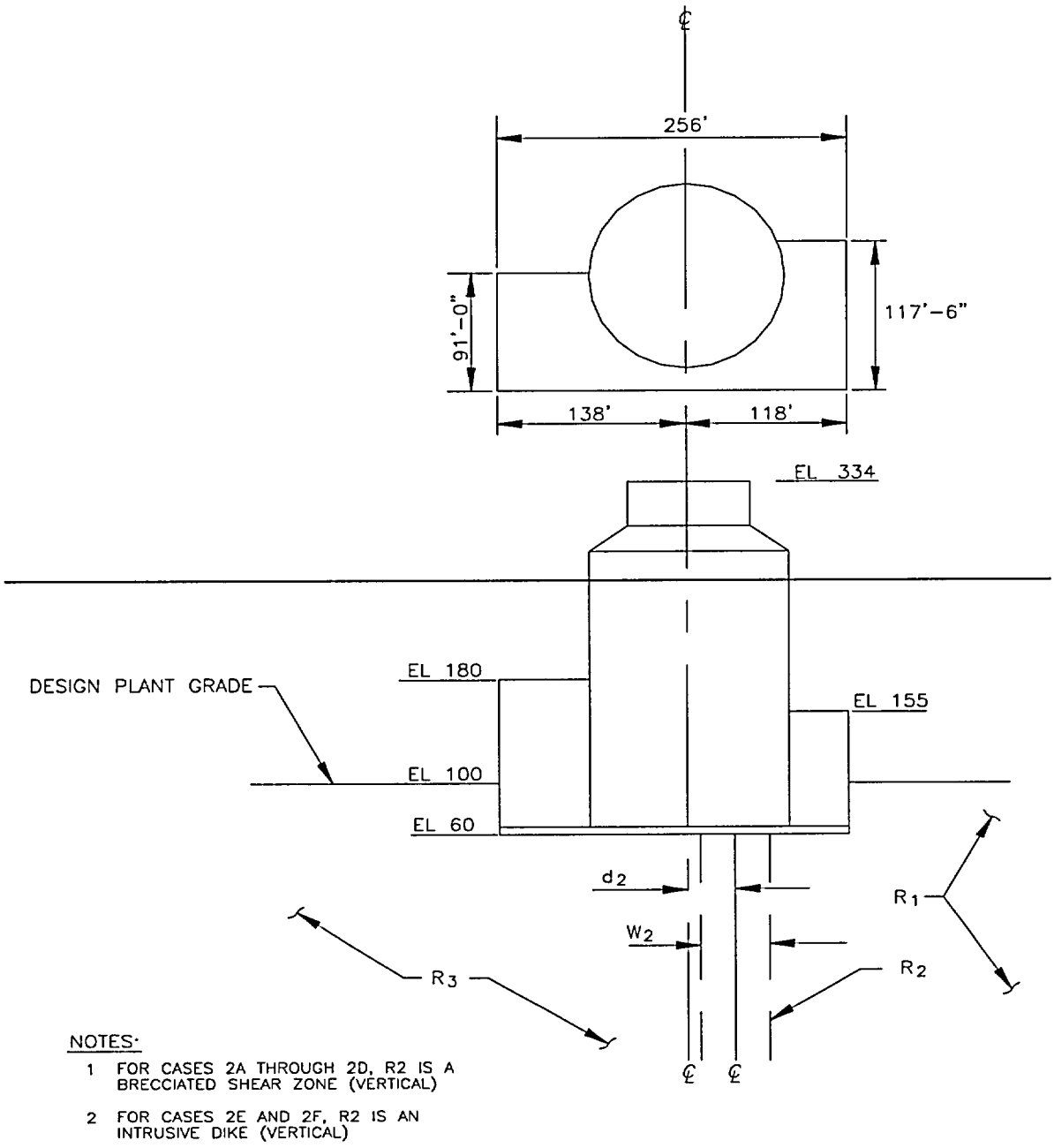

~~Figure 2.5-4~~

~~Geologically Impacted Site~~