DRESDEN ANNEX INDEX

CHAPTER 10

REVISION 2.2

CHAPTER 10

RADIOACTIVE EFFLUENT TREATMENT AND MONITORING

TABLE OF CONTENTS

PAGE

10.1 AIRBORNE RELEASES 10-1

1. System Description 10-1
   1. Condenser Offgas Treatment System 10-1
   2. Ventilation Exhaust Treatment System 10-1

2. Radiation Monitors 10-2
   1. Unit 1 Chimney Monitor 10-2
   2. Units 2/3 Chimney Monitor 10-2
   3. Reactor Building Vent Stack Effluent Monitors 10-2
   4. Reactor Building Ventilation Monitors 10-3
   5. Condenser Air Ejector Monitors 10-3
   6. Isolation Condenser Vent Monitor 10-3
   7. Chemical Cleaning Building Chimney Monitor 10-3

3. Alarm and Trip Setpoints 10-3
   1. Setpoint Calculations 10-3
      1. Reactor Building Vent Monitors 10-3
      2. Condenser Air Ejector Monitors 10-3
      3. Units 2/3 Plant Chimney Radiation Monitor 10-3

   2. Release Limits 10-4
   3. Release Mixture 10-5
   4. Conversion Factors 10-5
   5. HVAC Flow Rates 10-6

4. Allocation of Effluents from Common Release Points 10-6

5. Dose Projections 10-6

CHAPTER 10

RADIOACTIVE EFFLUENT TREATMENT AND MONITORING

TABLE OF CONTENTS(Cont'd)

PAGE

10.2 LIQUID RELEASE 10-6

1. System Description 10-6
   1. Unit 1 Storage Tanks 10-6
   2. Units 2/3 Waste Sample Tanks 10-6
   3. Units 2/3 Floor Drain Sample Tanks 10-7
   4. Units 2/3 Waste Surge Tank 10-7

2. Radiation Monitors 10-7
   1. Liquid Radwaste Effluent Monitor 10-7
   2. Units 2 & 3 Service Water Effluent Monitors 10-7

3. Alarm and Trip Setpoints 10-8
   1. Setpoint Calculations 10-8
      1. Liquid Radwaste Effluent Monitor 10-8
      2. Units 2 & 3 Service Water Effluent Monitor 10-9

   2. Discharge Flow Rates 10-9
      1. Release Tank Discharge Flow Rate 10-9

   3. Release Limits 10-10
   4. Release Mixture 10-10
   5. Conversion Factors 10-10
   6. Liquid Dilution Flow Rates 10-10

4. Allocation of Effluents from Common Release Points 10-10

5. Projected Doses for Releases 10-10

10.3 SOLIDIFICATION OF WASTE/PROCESS CONTROL PROGRAM 10-10

CHAPTER 10

LIST OF FIGURES

NUMBER		PAGE
10-1	Simplified Gaseous Radwaste and Gaseous Effluent Flow Diagram	10-11
10-2	Simplified Gaseous Radwaste and Gaseous Effluent Flow Diagram	10-12
10-3	Simplified Liquid Radwaste Processing and Liquid Effluent Flow Diagram	10-13
10-4	Simplified Solid Radwaste Processing Diagram	10-14

CHAPTER 10

RADIOACTIVE EFFLUENT TREATMENT AND MONITORING

10.1 AIRBORNE RELEASES

10.1.1 System Description

A simplified gaseous radwaste and gaseous effluent flow diagram is provided for Dresden Unit 1 in Figure 10-1 and for Dresden Units 2 and 3 in Figure 10-2. Dresden 1 is no longer operational, but monitoring of potentially radioactive releases from the plant chimney continues.

Each airborne release point is classified as stack, vent, or ground level in accordance with the definitions in Section 4.1.4 and the results in Table A-1 of Appendix A. The principal release points for potentially radioactive airborne effluents and their classifications are as follows:

- For Dresden 1:
  - The Chemical Cleaning Building Chimney (a vent release point)
  - The plant chimney (a stack release point).
- For Dresden 2/3:
  - The ventilation chimney (a stack release point).
  - The reactor building ventilation stack (a vent release point).

10.1.1.1 Condenser Offgas Treatment System

The condenser offgas treatment system is designed and installed to reduce radioactive gaseous effluents by collecting non-condensable off-gases from the condenser and providing for holdup to reduce the total radioactivity by radiodecay prior to release to the environment. The daughter products are retained by charcoal and HEPA filters. The system is described in Section 11.3 of the Dresden UFSAR.

10.1.1.2 Ventilation Exhaust Treatment System

Ventilation exhaust treatment systems are designed and installed to reduce gaseous radioiodine or radioactive material in particulate form in selected effluent streams by passing ventilation or vent exhaust gases through charcoal absorbers and/or HEPA filters prior to release to the environment. Such a system is not considered to have any effect on noble gas effluents. The ventilation exhaust treatment systems are shown in Figures 10-1 and 10-2.

Engineered safety features atmospheric cleanup systems are not considered to be ventilation exhaust treatment system components.

10.1.2 Radiation Monitors

10.1.2.1 Unit 1 Chimney Monitor

The SPING continuously monitors the final effluent from the Unit 1 chimney.

The monitor has isokinetic sampling, gaseous grab sampling, and particulate and iodine sampling capability. Tritium samples are obtained using a portable sampling system. A tap is available for obtaining a sample from the isokinetic probe.

In normal operation all three noble gas channels (low, mid-range, high) are on line and active.

No automatic isolation or control functions are performed by this monitor.

10.1.2.2 Units 2/3 Chimney Monitor

The SPING continuously monitors the final effluent from the Units 2/3 chimney.

The monitor has isokinetic sampling, gaseous grab sampling, particulate and iodine sampling, and postaccident sampling capability. Tritium samples are obtained using a portable sampling system. A tap is available for obtaining a sample from the isokinetic probe.

In normal operation the two lower noble gas channels (low and mid-range) are on line and active. The high range noble gas channel flow is bypassed and this channel is in standby. At a predetermined threshold the low and mid-range noble gas channels are bypassed and only the high range noble gas channel remains active.

No automatic isolation or control functions are performed by this monitor. Pertinent information on this monitor is provided in the Dresden UFSAR Section 11.5.

In addition to the primary monitor described above, there is a backup system consisting of two additional detectors and sample taps in series in the primary sample stream.

10.1.2.3 Reactor Building Vent Stack Effluent Monitors

The SPING continuously monitors the final effluent from the reactor building vent stack.

The vent stack monitor has isokinetic sampling, gaseous sampling, and iodine and particulate sampling capability. Tritium samples are obtained using a portable sampling system. A tap is available for obtaining a sample from the isokinetic probe.

All channels are continuously on line and active.

No automatic isolation or control functions are performed by this monitor.

10.1.2.4 Reactor Building Ventilation Monitors

The monitor (located in the ventilation exhaust duct) monitors the effluent from the Unit 2(3) reactor building ventilation. On high alarm, the monitors automatically initiate isolation of the Unit 2(3) reactor building ventilation, and initiate startup of the Unit 2/3 standby gas treatment system.

Pertinent information on these monitors is provided in Dresden UFSAR Section 11.5.

10.1.2.5 Condenser Air Ejector Monitors

The monitors continuously monitor gross gamma activity downstream of the Unit 2 and 3 steam jet air ejector and prior to release to the main chimney.

At the trip setpoint the monitors automatically activate an interval timer which in turn initiates closure of an air operated valve, thus terminating the release.
Pertinent information on these monitors is found in Dresden UFSAR Section 11.5.

10.1.2.6 Isolation Condenser Vent Monitor

The monitor continuously monitors radioactivity in the effluent from the isolation condenser vent. No control device is initiated by this monitor.

Pertinent information on this monitor is provided in Dresden UFSAR Section 11.5.

10.1.2.7 Chemical Cleaning Building Chimney Monitor

The monitor has charcoal and particulate filters which are used to sample for iodine and particulates.

No automatic isolation, control functions or alarm functions are performed by this monitor.

10.1.3 Alarm and Trip Setpoints

10.1.3.1 Setpoint Calculations

10.1.3.1.1 Reactor Building Vent Monitors

The alarm setpoint for the reactor building vent monitor is established at 10 mr/hr.

10.1.3.1.2 Condenser Air Ejector Monitors

The high-high trip setpoint is established at ≤ 100 μCi/Sec per MWt (≅2.5E5μCi/sec) and the high alarm is established at ≤ 50μCi/sec per MWt (≅1.25E5μCi/sec).

10.1.3.1.3 Units 2/3 Plant Chimney Radiation Monitor

The setpoint is established at a count rate corresponding to no greater than 105,000 μCi/sec.

10.1.3.2 Release Limits

Alarm and trip setpoints of gaseous effluent monitors are established to ensure that the release rate limits of RETS are not exceeded. The release limits are found by solving Equations 10-1 and 10-2 for the total allowed release rate, Q_{tv}.

$$(1.11)\sum\{ f_i[Q_{ts}\overline{S}_i + Q_{tv}\overline{V}_i]\} < 500\text{mrem/yr} \qquad (10\text{-}1)$$

$$\sum \{(\overline{L}_i f_i[(X/Q)_s\, Q_{ts}\, \exp(-\lambda_i R/3600u_s)$$

$$+ (X/Q)_v Q_{tv} \exp-(\lambda_i R/3600u_v)] \qquad (10\text{-}2)$$

$$+(1.11)(f_i)[Q_{ts}S_i + Q_{tv}V_i]\}$$

$$< 3000\text{mrem/yr}$$

The summations are over noble gas radionuclides i.

f_i Fractional Radionuclide Composition
The release rate of noble gas radionuclide i divided by the total release rate of all noble gas radionuclides.

Q_{ts} Total allowed Release Rate, Stack Release [µCi/sec]
The total allowed release rate of all noble gas radionuclides released as stack releases.

Q_{tv} Total Allowed Release Rate, Vent Release [µCi/sec]
The total allowed release rate of all noble gas radionuclides released as vent releases.

Refer to Section A.1 of Appendix A for the definitions of the remaining parameters.

Equation 10-1 is based on Equation A-8 of Appendix A and the RETS restriction on whole body dose rate (500 mrem/yr) due to noble gases released in gaseous effluents (see Section A.1.3.1 of Appendix A). Equation 10-2 is based on Equation A-9 of Appendix A and the RETS restriction on skin dose rate (3000 mrem/yr) due to noble gases released in gaseous effluents (see Section A.1.3.2 of Appendix A).

Calibration methods and surveillance frequency for the monitors will be conducted as specified in the RETS.

10.1.3.3 Release Mixture

In the determination of alarm and trip setpoints the radioactivity mixture in the exhaust air is assumed to have the following compositions.

- Reactor building vent effluent monitors.

  The mixture used for the GE monitors is taken from a representative isotopic analysis of the vent stack noble gas released since the last calibration, or based on nominal response of detector. The "mixture" used for the SPING is assumed to be a single pseudo-noble gas radionuclide.

- Condenser air ejector monitor.

  The mixture used for this monitor is taken from a representative isotopic analysis of noble gases collected at the recombiner outlet during plant operation, since the last alarm setpoint calculation.

- Units 2/3 plant chimney monitors.

  The mixture used for the GE monitors is taken from the most recent isotopic analysis of noble gases collected from the chimney monitor which corresponds to an above background recorder reading. The "mixture" used for the SPING is assumed to be a single pseudo-noble gas radionuclide.

10.1.3.4 Conversion Factors

The conversion factors used to establish gaseous effluent monitor setpoints are obtained as follows.

- Reactor building vent effluent monitor.

  For the GE monitors, the isotopic analysis in Section 10.1.3.3 and the monitor reading (in mR/hr) at the time of the analysis or nominal response of detector are used to establish the conversion factor in mR/hr per μCi/cc or μCi/ft^3. For the SPING the conversion factor is based on the 0.8 MeV gamma of the pseudo-noble gas radionuclide.

- Condenser air ejector monitor.

  The isotopic analysis in Section 10.1.3.3 and the flow and monitor reading (in mR/hr) at the time of the analysis are used to establish the conversion factor in mR/hr per μCi/cc or μCi/ft^3.

- Units 2/3 plant chimney monitors

  For the GE monitors, the isotopic analysis in Section 10.1.3.3 and flow and monitor reading (in CPS) at the time of the analysis are used to establish the conversion factor in CPS per μCi/cc or μCi/ft^3. For the SPING the conversion factor is based on the 0.8 MeV gamma of the pseudo-noble gas radionuclide.

10.1.3.5 HVAC Flow Rates

The HVAC exhaust flow rates are obtained from either the Units 2/3 process computers or the SPING control station. For the 2/3 Chimney, additional process flow rates must be added to obtain the total chimney flow (see Figure 10-2). Unit operation may affect actual flow rates which therefore may differ from values listed. If the actual flows are not available, the following default values based on design flow can be used:

Units 2/3 Chimney Air Flow	1.25E10 cc/min
Units 2/3 Combined Reactor Vent	6.23E9 cc/min
Unit 1 Chimney Air Flow	9.46E8 cc/min
Unit 1 Chemical Cleaning Chimney Air Flow	1.61E9 cc/min

10.1.4 Allocation of Effluents from Common Release Points

Radioactive particulates and iodine released from the Unit 1 Chemical Cleaning Chimney originate from the Chemical Cleaning Building and Interim Radwaste Storage Facility.

Radioactive gases, particulates, and iodines released from the Unit 1 chimney originate from Unit 1 only. However, radioactive gaseous effluents released from Units 2/3 are comprised of contributions from both units. Estimates of noble gas contributions from Units 2 and 3 are allocated considering appropriate operating conditions and measured SJAE off-gas activities. Allocation of radioiodine and radioactive particulate releases to Units 2 or 3 specifically is not as practical and is influenced greatly by in-plant leakage. Under normal operating conditions, allocation is made using reactor coolant iodine activities. During unit shutdowns or periods of known major in-plant leakage, the apportionment is adjusted accordingly. The allocation of effluents is estimated on a monthly basis.

10.1.5 Dose Projections

Because the gaseous releases are continuous, the doses are routinely calculated in accordance with the RETS.

10.2 LIQUID RELEASES

10.2.1 System Description

A simplified liquid radwaste and liquid effluent flow diagram is provided in Figure 10-3.

The liquid radwaste treatment system is designed and installed to reduce radioactive liquid effluents by collecting the liquids, providing for retention or holdup, and providing for treatment by evaporator, demineralizer, filter, and further vendor processing systems for the purpose of reducing the total radioactivity prior to reuse or release to the environment. The system is described in the Dresden UFSAR Section 11.2.

10.2.1.1 Unit 1 Storage Tanks

Liquid radioactive effluents are not released from Unit 1 Storage tanks directly to the environment but are made through the Units 2/3 radwaste system.

10.2.1.2 Units 2/3 Waste Sample Tanks

There are three waste sample tanks (33,000 gallons each) which receive water from the liquid waste treatment system. These tanks are transferred to the waste surge tank for discharge to the Illinois River via the discharge canal.

10.2.1.3 Units 2/3 Floor Drain Sample Tanks

There are two floor drain sample tanks (22,000 gallons each) which receive liquid waste from the floor drain treatment system. These tanks are transferred to the waste surge tank or discharged to the Illinois River via the discharge canal.

10.2.1.4 Units 2/3 Waste Surge Tank

The waste surge tank receives processed water from the waste sample tanks and floor drain sample tanks. This tank discharges to the Illinois River via the discharge canal.

10.2.2 Radiation Monitors

10.2.2.1 Liquid Radwaste Effluent Monitor

The monitor is used to monitor releases from the waste surge tank, floor drain sample tanks or portable waste treatment system tanks. On high alarm, a grab sample of the effluent is automatically taken from the discharge side of the sample chamber after a 0 to 60 second delay determined by a locally mounted timer. The release is terminated manually by initiating closure of the low flow or high flow discharge line valves.

Pertinent information on the monitor and associated control devices is provided in the Dresden UFSAR Section 11.5.

10.2.2.2 Units 2 & 3 Service Water Effluent Monitors

The monitors continuously monitor the service water effluent. On high alarm a grab sample is taken.

Pertinent information on these monitors is provided in the Dresden UFSAR Section 11.5..

10.2.3 Alarm and Trip Setpoints

10.2.3.1 Setpoint Calculations

Alarm and trip setpoints of liquid effluent monitors at the principal release points are established to ensure that the limits of 10CFR20 are not exceeded in the unrestricted area.

10.2.3.1.1 Liquid Radwaste Effluent Monitor

The monitor setpoint is found by solving equation 10-3 for the total isotopic activity.

$$P \leq K \times (\Sigma C_i^T / \Sigma(C_i^T / DWC_i)) \times ((F^d + F^r_{max}) / F^r_{max}) \qquad (10\text{-}3)$$

P	Release Setpoint	[cpm]
C_i^T	Concentration of radionuclide i in the release tank	[µCi/ml]
F^r_{max}	Maximum Release Tank Discharge Flow Rate The flow rate from the radwaste discharge tank. The maximum pump discharge rate of 250 gpm is used for calculating the setpoint.	[gpm]
K	Calibration constant	[cpm/µCi/ml]
DWC_i	Derived Water Concentration (also referred to as Effluent Concentration Limit, ECL) of Radionuclide i	[µCi/ml]
	Radionuclide i is 10 times the concentration given in Appendix B, Table 2, Column 2 to 10CFR20.1001-2402.	
F^d	Dilution Flow	[gpm]

10.2.3.1.2 Units 2 & 3 Service Water Effluent Monitor

The monitor setpoint is established at two times the background radiation value.

10.2.3.2 Discharge Flow Rates

10.2.3.2.1 Release Tank Discharge Flow Rate

Prior to each batch release, a grab sample is obtained.

The results of the analysis of the sample determine the discharge rate of each batch as follows:

$$F^r_{max} = 0.1(F^d/\Sigma(C_i/DWC_i)) \quad (10\text{-}4)$$

The summation is over radionuclides i.

0.1 Reduction factor for conservatism.

F^r_{max} Maximum Permitted Discharge Flow Rate [gpm]

The maximum permitted flow rate from the radwaste discharge tank. Releases are not permitted if the calculated discharge rate, F^r_{max}, is less than 250 gpm.

F^d Dilution Flow [gpm]

C_i Concentration of Radionuclide i in the Release Tank [µCi/ml]

The concentration of radioactivity in the radwaste discharge tank based on measurements of a sample drawn from the tank.

DWC_i Derived Water Concentration of Radionuclide i [µCi/ml]

Radionuclide i is 10 times the concentration given in Appendix B, Table 2, Column 2 to 10CFR20.1001-2402.

10.2.3.3 Release Limits

Release limits are determined from 10CFR20. Calculated maximum permissible discharge rates are divided by 10 to ensure that applicable derived water concentrations (DWC) are not exceeded.

10.2.3.4 Release Mixture

For the liquid radwaste effluent monitor, the release mixture used for the setpoint determination is the radionuclide mix identified in the grab sample isotopic analysis.

For all other liquid effluent monitors, no release mixture is used because the setpoint is established at "two times background."

10.2.3.5 Conversion Factors

The readout for the liquid radwaste effluent monitor is in CPM. The calibration constant is based on the detector sensitivity to Co-60.

The readouts for the Units 2 & 3 service water effluent monitors are in µCi/ml. The calibration constants are based on the detector sensitivity to Co-60.

10.2.3.6 Liquid Dilution Flow Rates

The dilution flow is determined using the installed flowmeter in the discharge canal.

10.2.4 Allocation of Effluents from Common Release Points

Radioactive liquid effluents released from the release tanks are comprised of contributions from all three units. Under normal operating conditions, it is difficult to apportion the radioactivity between the units. Consequently, allocation is normally made evenly between units 2 and 3.

10.2.5 Projected Doses for Releases

Doses due to liquid effluents are calculated in accordance with the RETS.

10.3 SOLIDIFICATION OF WASTE/PROCESS CONTROL PROGRAM

The process control program (PCP) contains the sampling, analysis, and formulation determination by which solidification of radioactive wastes from liquid systems is ensured.

Figure 10-4 is a simplified diagram of solid radwaste processing.

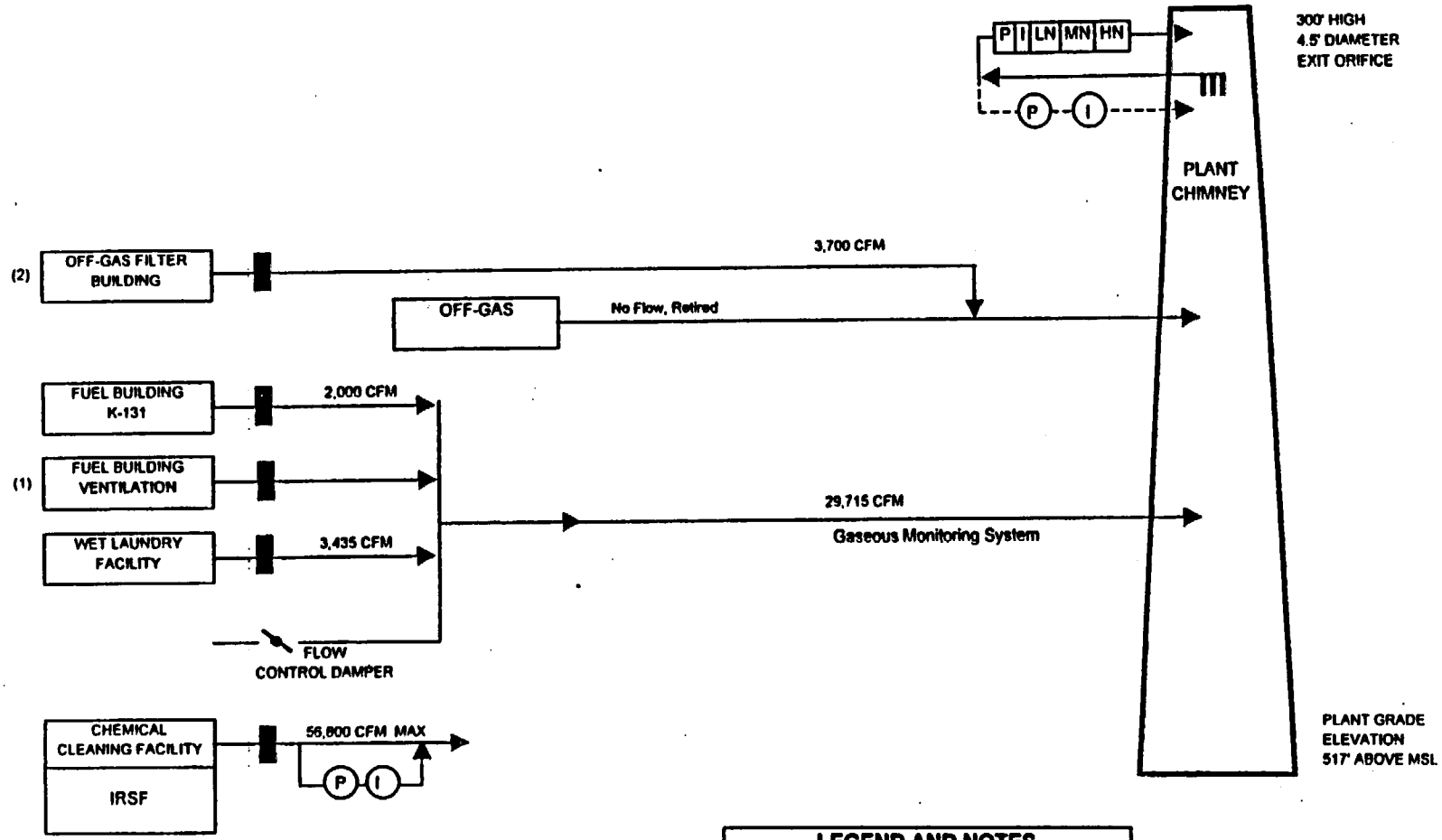

LEGEND AND NOTES

- HEPA FILTER
- (P) PARTICULATE SAMPLE
- (I) IODINE SAMPLE
- P I LN — FLOW THROUGH RADIATION MONITOR:
  P=PARTICULATE
  I=IODINE
  LN, MN, HN=LOW, MEDIUM & HIGH RANGE NOBLE GAS

NOTES:
1. UNIT 1 IS NOT OPERATIONAL
2. ALL FLOW RATES ARE DESIGN FLOW RATES, NOT ACTUAL

(1) 8,000 CFM summer
4,000 CFM winter

(2) Normally Operated in Winter Only

OFFSITE DOSE CALCULATION MANUAL
DRESDEN STATION UNIT 1

FIGURE 10-1

SIMPLIFIED GASEOUS RADWASTE AND GASEOUS EFFLUENT FLOW DIAGRAM

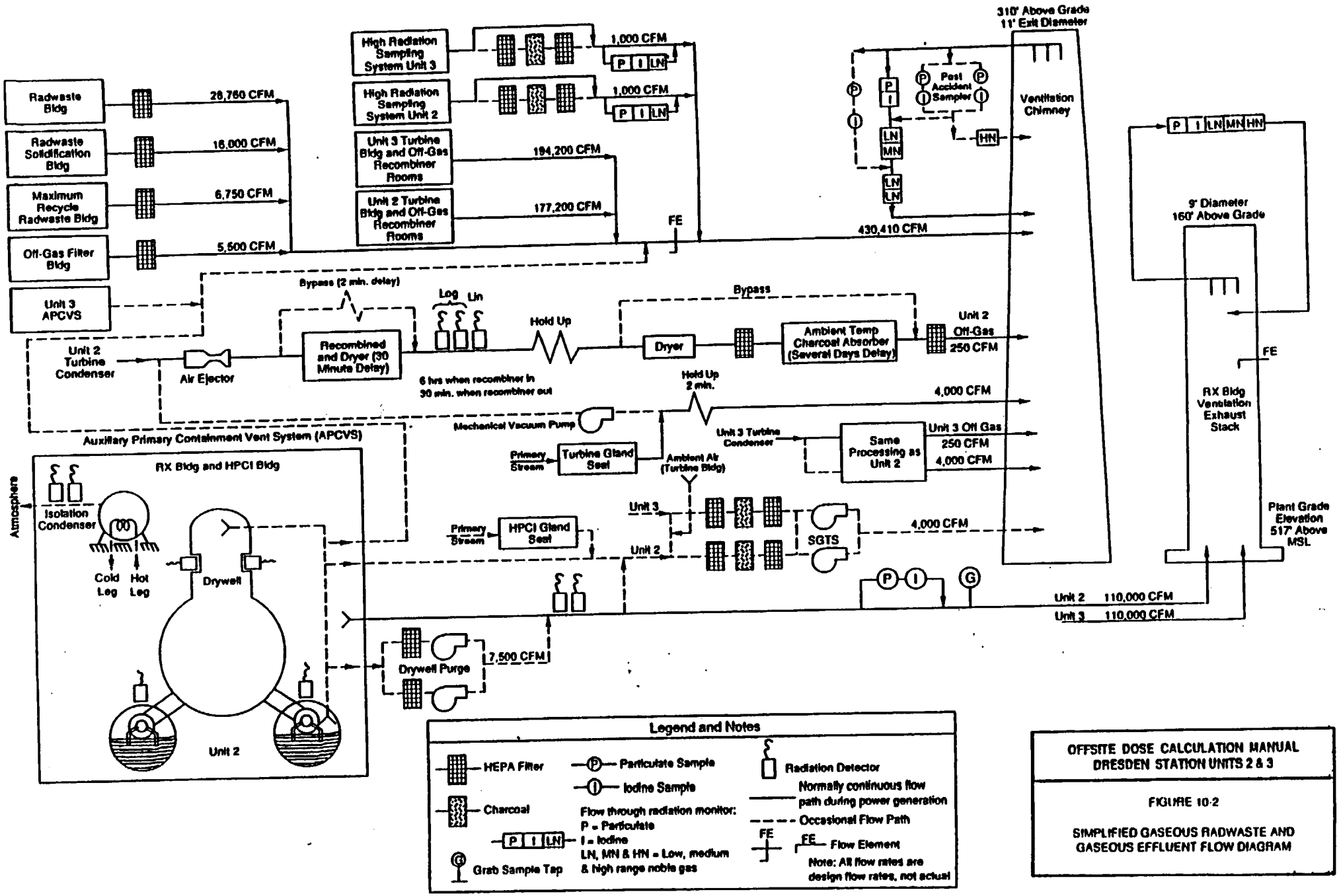

OFFSITE DOSE CALCULATION MANUAL
DRESDEN STATION UNITS 2 & 3

FIGURE 10-2

SIMPLIFIED GASEOUS RADWASTE AND GASEOUS EFFLUENT FLOW DIAGRAM

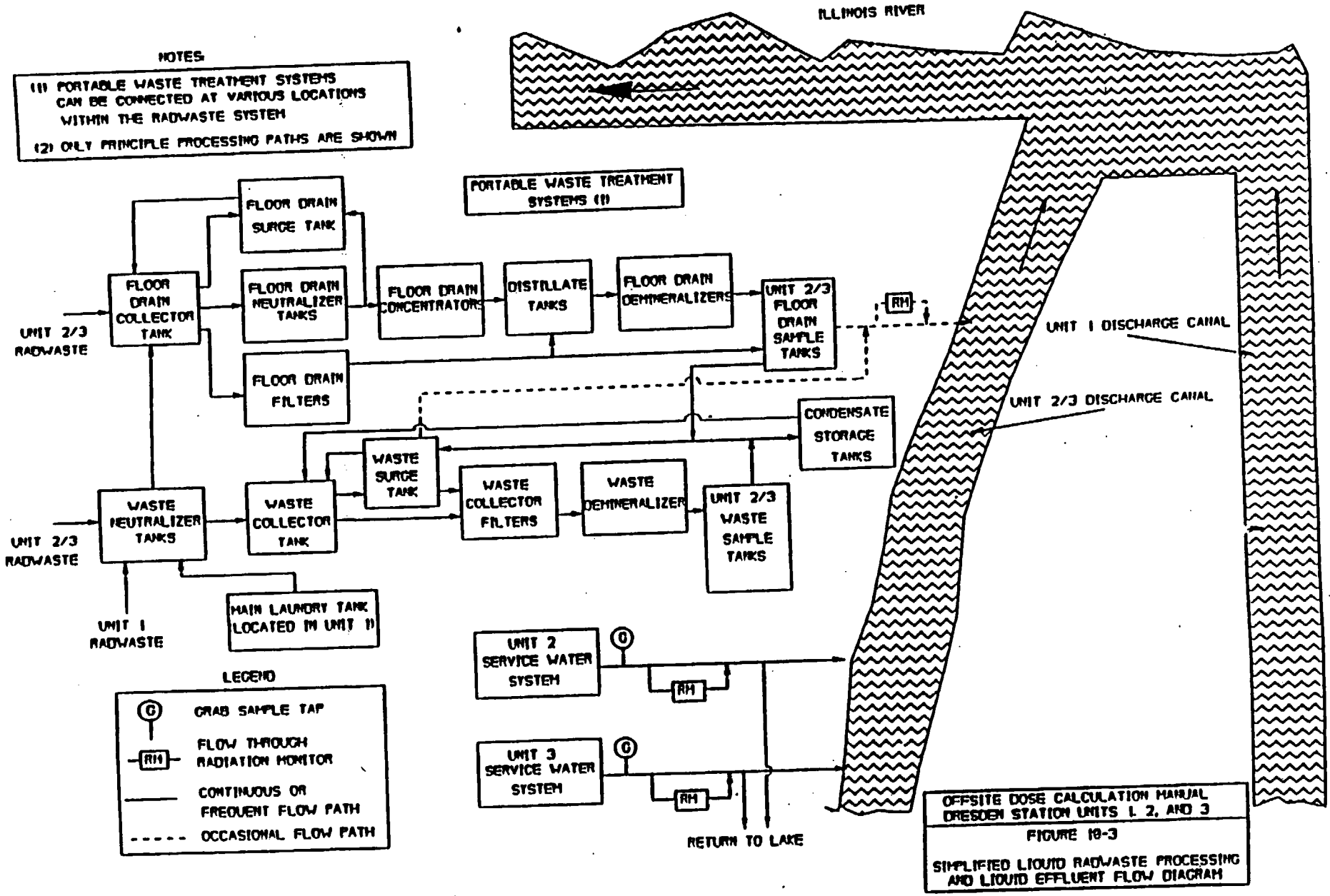

OFFSITE DOSE CALCULATION MANUAL
DRESDEN STATION UNITS 1, 2, AND 3

FIGURE 10-3

SIMPLIFIED LIQUID RADWASTE PROCESSING AND LIQUID EFFLUENT FLOW DIAGRAM

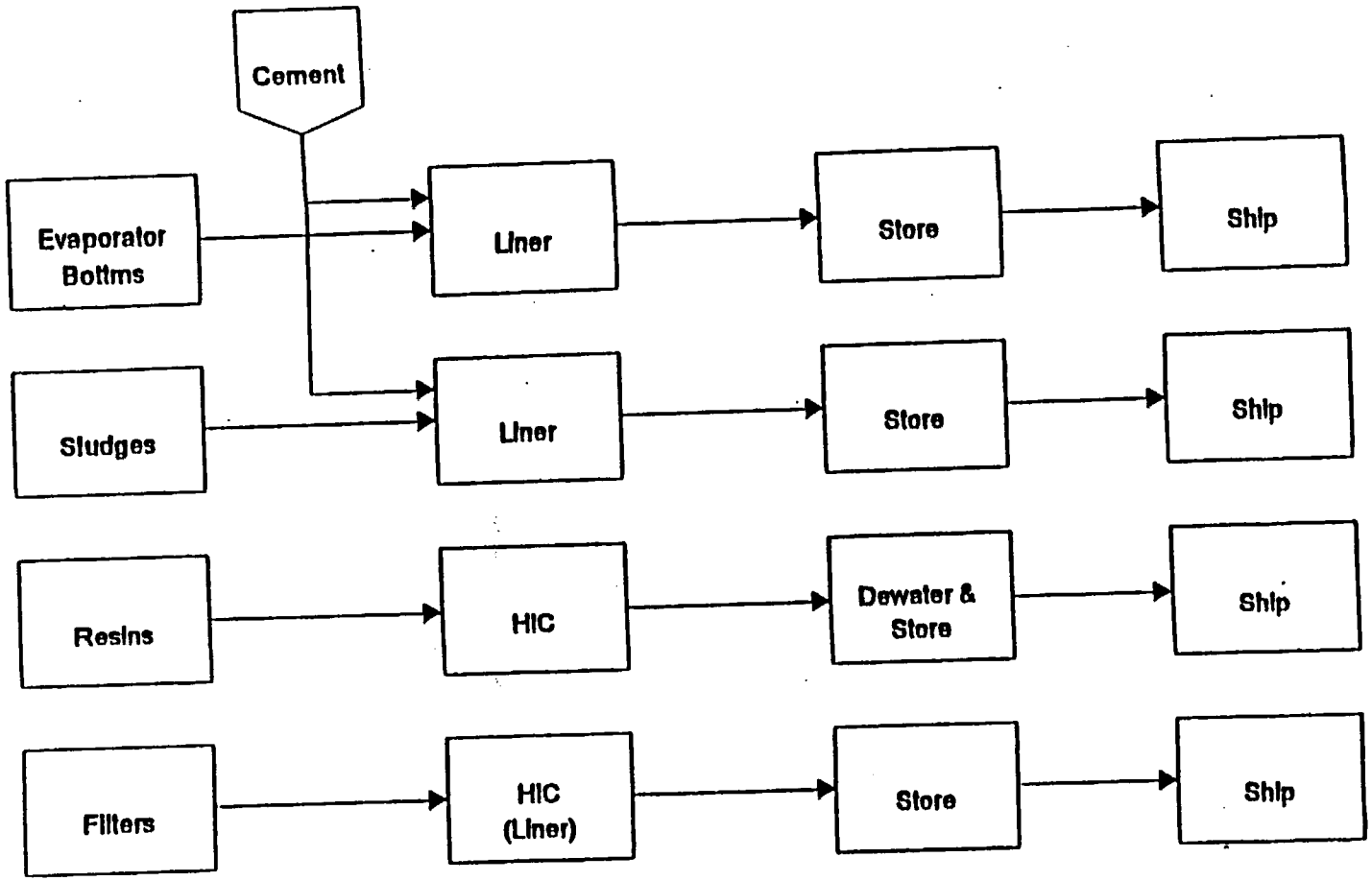

OFFSITE DOSE CALCULATION MANUAL
DRESDEN STATION UNITS 2 AND 3

FIGURE 10-4

SIMPLIFIED SOLID RADWASTE PROCESSING DIAGRAM

Dresden Station
Chapter 11 Change Summary
ODCM Revision 1.5, January 2000

Page	Change Description
11-i	Updated the revision number, date and file designator.
11-6	In Table 11-1, added Step 3.f. to include Illinois River dredge spoil sampling to the REMP Program.
11-8	In Table 11-1, added footnote 9. to establish limitations on dredge spoil sampling requirement.

CHAPTER 11

DRESDEN ANNEX INDEX

Revision 1.5

CHAPTER 11

RADIOLOGICAL ENVIRONMENTAL MONITORING PROGRAM

TABLE OF CONTENTS

CHAPTER	TITLE	PAGE
11	Radiological Environmental Monitoring Program	11-1

LIST OF TABLES

NUMBER	TITLE	PAGE
11-1	Radiological Environmental Monitoring Program	11-2

LIST OF FIGURES

NUMBER	TITLE	PAGE
11-1	Fixed Air Sampling and TLD Sites and Outer Ring TLD Locations	11-9
11-2	Inner Ring TLD Locations and Near Station Water Sample Locations	11-10

CHAPTER 11

RADIOLOGICAL ENVIRONMENTAL MONITORING PROGRAM

The Radiological Environmental Monitoring Program for the environs around Dresden Station is given in Table 11-1.

Figures 11-1 and 11-2 show general sampling and monitoring locations.

Table 11-1
Radiological Environmental Monitoring Program

Exposure Pathway and/or Sample	Sample or Monitoring Location[6]	Sampling or Collection Frequency	Type and Frequency of Analysis
1. Airborne Radioiodine and Particulates	a. Indicators-Near Field D-04, Collins Road, 0.9 mi W (1.4 km N) D-06, Will County Road, 1.4 mi SE* (2.2 km G) D-07, Clay Products, 2.0 mi S (3.2 km J) D-45, McKinley Woods Rd, 1.5 mi ENE (2.4 km D) D-53, Grundy County Road, 2.1 mi SSE* (3.2 km H) * D-06 will be deleted once operational status of D-53 has been established. b. Indicators-Far Field D-08, Prairie Parks, 4.0 ,I SW (6.4 km L) D-10, Goose Lake Village, 3.8 mi SSW (6.1 km K) D-13, Minooka, 4.5 mi N (7.2 km A) D-14, Channahon, 3.5 mi NE (5.6 km C) c. Controls D-12, Lisbon, 10.0 mi NW (16.0 km Q) d. Special[8] D-01, Onsite Station 1, 0.6 mi NW (1.0 km Q) D-02, Onsite Station 2, 0.3 mi NE (0.5 km C) D-03, Onsite Station 3, 0.4 mi S (0.6 km J)	Continuous sampler operation with particulate sample collection weekly, or more frequently if required by dust loading, and radioiodine canister collection biweekly.	Radioiodine Canisters: I-131 analysis biweekly on near field and control samples[1]. Particulate Sampler[7]: Gross beta analysis following weekly filter change[2] and gamma isotopic analysis[3] quarterly on composite filters by location on near field and control samples.[1]

Table 11-1 (Cont'd)
Radiological Environmental Monitoring Program

Exposure Pathway and/or Sample	Sample or Monitoring Location[6]	Sampling or Collection Frequency	Type and Frequency of Analysis
2. Direct Radiation	a. Indicators-Inner Ring D-101-1, 1.0 mi N (1.6 km A) D-101-2, 1.0 mi N (1.6 km A) D-102-1, 1.3 mi NNE (2.1 km B) D-102-2, 1.3 mi NNE (2.1 km B) D-103-1, 1.2 mi NE (1.9 km C) D-103-2, 1.2 mi NE (1.9 km C) D-104-1, 1.5 mi ENE (2.4 km D) D-104-2, 1.5 mi ENE (2.4 km D) D-105-1, 1.4 mi E (2.2 km E) D-105-2, 1.4 mi E (2.2 km E) D-106-1, 0.9 mi ESE (1.4 km F) D-106-2, 0.9 mi ESE (1.4 km F) D-107-1, 1.3 mi SE (2.1 km G) D-107-2, 1.3 mi SE (2.1 km G) D-108-1, 1.9 mi SSE (3.0 km H) D-108-2, 1.9 mi SSE (3.0 km H) D-109-1, 0.8 mi S (1.3 km J) D-109-2, 0.8 mi S (1.3 km J) D-110-3, 0.8 mi SSW (1.3 km K) D-110-4, 0.8 mi SSW (1.3 km K) D-111-1, 0.6 mi SW (1.0 km L) D-111-2, 0.6 mi SW (1.0 km L) D-112a-1, 0.8 mi WSW (1.3 km M) D-112a-2, 0.8 mi WSW (1.3 km M) D-113-1, 0.9 mi W (1.4 km N) D-113-2, 0.9 mi W (1.4 km N) D-114-1, 1.0 mi WNW (1.6 km P) D-114-2, 1.0 mi WNW (1.6 km P) D-115-1, 0.8 mi NW (1.3 km Q) D-115-2, 0.8 mi NW (1.3 km Q) D-116-1, 1.0 mi NNW (1.6 km R) D-116-2, 1.0 mi NNW (1.6 km R)	Quarterly	Gamma dose on each TLD quarterly.

Table 11-1 (Cont'd)
Radiological Environmental Monitoring Program

Exposure Pathway and/or Sample	Sample or Monitoring Location[6]	Sampling or Collection Frequency	Type and Frequency of Analysis
2. Direct Radiation (Cont'd)	b. Indicators-Outer Ring D-201-1, 4.5 mi N (7.2 km A) D-201-2, 4.5 mi N (7.2 km A) D-202-1, 5.0 mi NNE (8.0 km B) D-202-2, 5.0 mi NNE (8.0 km B) D-203-1, 4.5 mi NE (7.2 km C) D-203-2, 4.5 mi NE (7.2 km C) D-204-1, 5.0 mi ENE (8.0 km D) D-204-2, 5.0 mi ENE (8.0 km D) D-205-1, 4.2 mi E (6.7 km E) D-205-2, 4.2 mi E (6.7 km E) D-206-1, 3.5 mi ESE (5.6 km F) D-206-2, 3.5 mi ESE (5.6 km F) D-207-1, 4.5 mi SE (7.2 km G) D-207-2, 4.5 mi SE (7.2 km G) D-208-1, 5.0 mi SSE (8.0 km H) D-208-2, 5.0 mi SSE (8.0 km H) D-209-1, 5.0 mi S (8.0 km J) D-209-2, 5.0 mi S (8.0 km J) D-210-1, 4.8 mi SSW (7.7 km K) D-210-2, 4.8 mi SSW (7.7 km K) D-211-1, 5.0 mi SW (8.0 km L) D-211-2, 5.0 mi SW (8.0 km L) D-212-3, 6.0 mi WSW (9.7 km M) D-212-4, 6.0 mi WSW (9.7 km M) D-213-1, 4.5 mi W (7.2 km N) D-213-2, 4.5 mi W (7.2 km N) D-214-1, 4.5 mi WNW (7.2 km P) D-214-2, 4.5 mi WNW (7.2 km P) D-215-1, 5.1 mi NW (8.2 km Q) D-215-2, 5.1 mi NW (8.2 km Q) D-216-1, 4.8 mi NNW (7.7 km R) D-216-2, 4.8 mi NNW (7.7 km R)		

Table 11-1 (Cont'd)
Radiological Environmental Monitoring Program

Exposure Pathway and/or Sample	Sample or Monitoring Location[6]	Sampling or Collection Frequency	Type and Frequency of Analysis
2. Direct Radiation (Cont'd)	c. Other Indicators One at each of the airborne location given in part 1.a and 1.b. d. Controls One at each airborne control location given in part 1.c.		

Table 11-1 (Cont'd)
Radiological Environmental Monitoring Program

Exposure Pathway and/or Sample	Sample or Monitoring Location[6]	Sampling or Collection Frequency	Type and Frequency of Analysis
3. Waterborne			
a.. Ground/Well	a. Indicators D-23, Thorsen Well, 0.7 mi S (1.1 km J) D-35, Dresden Lock & Dam, 0.5 mi NW (0.8 km Q)	Quarterly	Gamma isotopic[3] and tritium analysis quarterly.
b. Drinking Water	There is no drinking water pathway within 6.2 mi downstream of station.		
c. Surface Water	a. Indicator D-51, Dresden Lock & Dam, 0.5 mi NW (0.8 km Q)	Weekly grab sample	Gross beta and gamma isotopic analysis[3] on monthly composite; tritium analysis on quarterly composite.
d. Control	a. Control D-52, DesPlaines River, 0.9 mi ESE (1.4 km F)	Weekly grab sample	Gross beta and gamma isotopic analysis[3] on monthly composite; tritium analysis on quarterly composite.
e. Sediments	a. Indicator D-27, Dresden Lock & Dam, 0.5 mi NW (0.8 km Q)	Semiannually	Gamma isotopic analysis[3] semiannually.
f. Dredging Spoils	a. Indicator One sample from each major dredging of Illinois River within 1 mile downstream of station discharge point.	Annually[9]	Gamma isotopic[3] Annually[9]

Table 11-1 (Cont'd)
Radiological Environmental Monitoring Program

Exposure Pathway and/or Sample	Sample or Monitoring Location[6]	Sampling or Collection Frequency	Type and Frequency of Analysis
4. Ingestion			
a. Milk	a. Indicators There are no dairies within 6.2 miles of the station. b. Control D-25, Vince Biros Farm, 11.5 mi SW (18.5 km L)	Biweekly: May through October; Monthly: November through April	Gamma isotopic[(3)] and I-131 analysis[(4)] on each sample.
b. Fish[5]	a. Indicator D-28, Dresden Pool of Illinois River, 0.5 mi NW (0.8 km Q) b. Control D-46, DesPlaines River upstream of discharge, 0.9 mi E (1.4 km E)	Two times annually	Gamma isotopic analysis[3] on edible portions of each
c. Food Products	a. Indicators Two samples from each of the four major quadrants within 6.2 miles of the station. Sample locations for food products may vary based on availability and therefore are not required to be identified here but shall be taken, if available. b. Controls Two samples within 9.3 to 18.6 miles of the station.	Annually	Gamma isotopic analysis[3] each sample.

Table 11-1 (Cont'd)
Radiological Environmental Monitoring Program

1 Far field samples are analyzed when near field results are inconsistent with previous measurements and radioactivity is confirmed as having its origin in airborne effluents released from the station, or at the discretion of the Radiation Protection Director.

2 Airborne particulate sample filters shall be analyzed for gross beta radioactivity 24 hours or more after sampling to allow for radon and thoron daughter decay. If gross beta activity in air particulate samples is greater than 10 times the yearly mean of control samples, gamma isotopic analysis shall be performed on the individual samples.

3 Gamma isotopic analysis means the identification and quantification of gamma emitting radionuclides that may be attributable to the effluents from the station.

4 I-131 analysis means the analytical separation and counting procedure are specific for this radionuclide.

5 The fish monitoring locations are not identified exactly on the map. The points, D-28 and D-46, represent the general area where the samples are taken.

6. Distances provided for sampling/monitor locations are approximate.

7. The analysis requirements listed are for the REMP-required samples only. The special samples require only quarterly gamma isotopic analyses on the composite filters.

8. These sampling locations do not constitute REMP samples, but are special samples required per Section 11.5.1.10 of the UFSAR. They may be discontinued pending revision of the aforementioned section.

9. Illinois River dredge spoils sampling is not required if dredging within 1 mile of Dresden Station river discharge point has not occurred since last sample collection. Individual areas where spoils are deposited do not require sampling if no additions were made to that area since last sample collection.

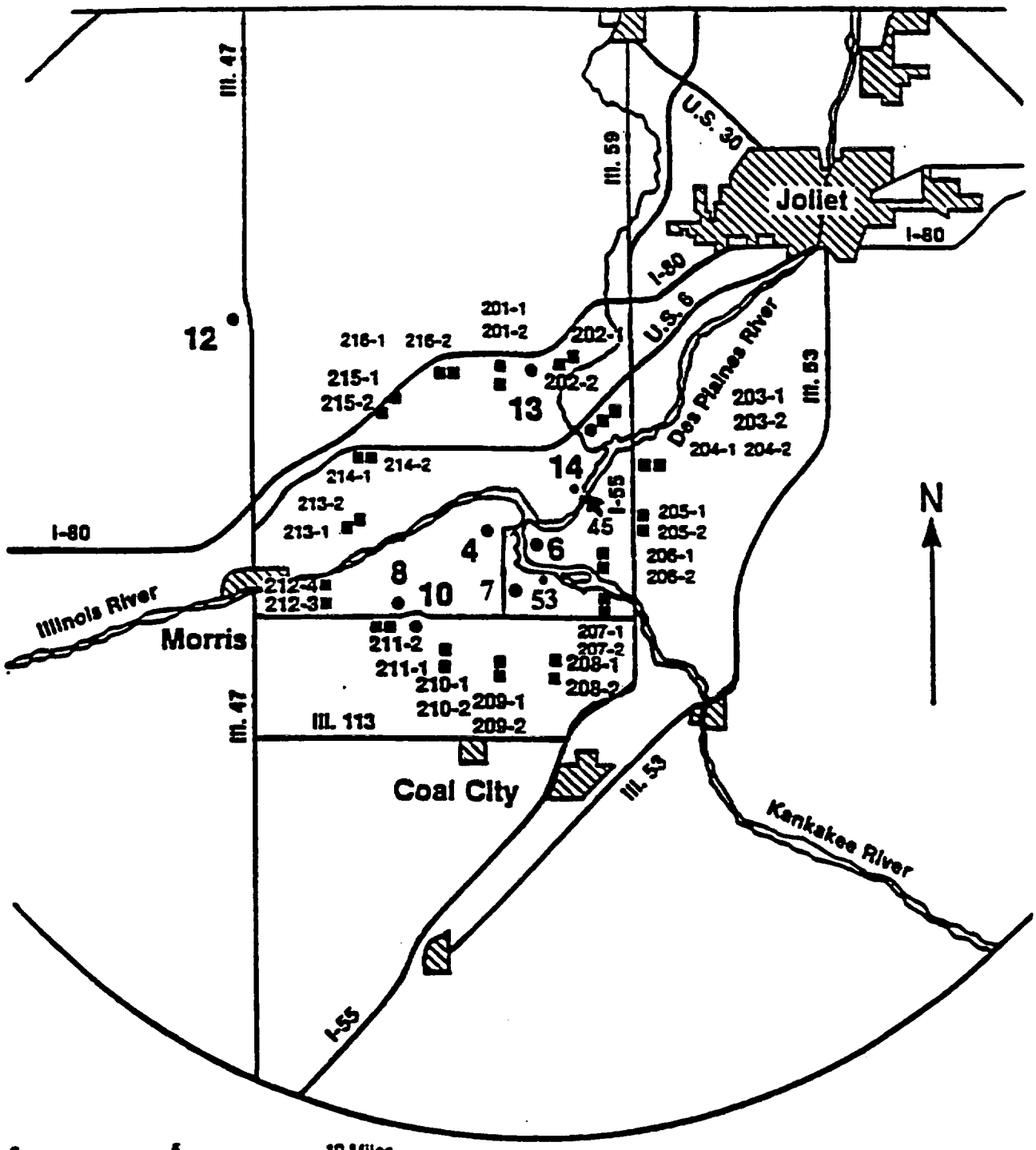

OFFSITE DOSE CALCULATION MANUAL
DRESDEN STATION UNITS 1, 2, & 3

FIGURE 11-1

FIXED AIR SAMPLING AND TLD SITES AND OUTER RING TLD LOCATIONS

dn11r1-5.doc

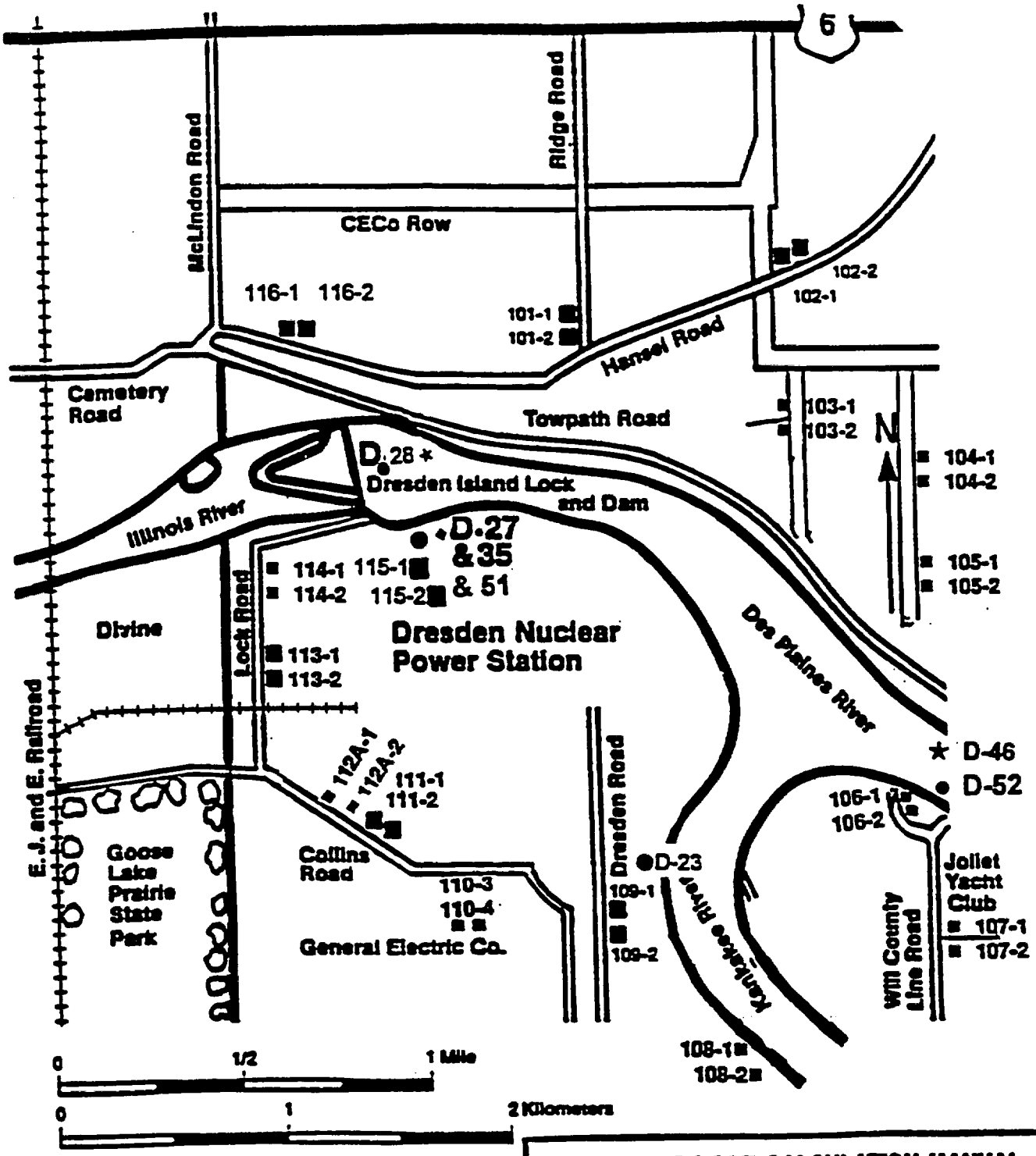

★ Fish
■ TLD
◆ Sediment
● Water

OFFSITE DOSE CALCULATION MANUAL
DRESDEN STATION UNITS 1, 2, & 3

FIGURE 11-2

INNER RING TLD LOCATIONS AND NEAR STATION WATER SAMPLE LOCATIONS

CHAPTER 12.0

SPECIAL NOTE

The requirements of the Technical Specifications shall take precedence over this chapter, should any differences occur.

The transfer of the Radiological Effluent Technical Specifications (RETS) to the ODCM for Unit 1 has been approved by the Nuclear Regulatory Commission in Amendment 39.

The transfer of the Radiological Effluent Technical Specifications (RETS) to the ODCM for Units 2 and 3 has been approved by the Nuclear Regulatory Commission in Amendments 150 and 145.

CHAPTER 12

DRESDEN ANNEX INDEX

Revision 2

CHAPTER 12
RADIOLOGICAL EFFLUENT TECHNICAL STANDARDS (RETS)
TABLE OF CONTENTS

		PAGE
12.1	DEFINITIONS	12-1
12.2	INSTRUMENTATION	12-6
	A. Radioactive Liquid Effluent Monitoring Instrumentation	12-6
	1. Radioactive Liquid Effluent Monitoring Instrumentation Operability	12-6
	2. Radioactive Liquid Effluent Monitoring Instrumentation Surveillance	12-6
	B. Radioactive Gaseous Effluent Monitoring Instrumentation	12-6
	1. Radioactive Gaseous Effluent Monitoring Instrumentation Operability	12-6
	2. Radioactive Gaseous Effluent Monitoring Instrumentation Surveillance	12-7
	C. Liquid and Gaseous Effluents Instrumentation Bases	12-18
12.3	LIQUID EFFLUENTS	12-19
	A. Liquid Effluents Limits and Reporting Operability	12-19
	1. Concentration in Unrestricted Areas	12-19
	2. Dose from Liquid Effluents	12-19
	3. Dose Projections	12-20
	4. Liquid Radioactive Waste Treatment System	12-21
	5. System Operability and Plant Operations	12-21
	B. Liquid Effluents Surveillance	12-21
	1. Concentration in Unrestricted Areas	12-21
	2. Dose from Liquid Effluents	12-22
	3. Dose Projections	12-22
	C. Liquid Effluents Bases	12-29
	1. Concentration	12-29
	2. Dose	12-29
	3. Liquid Waste Treatment	12-29
	4. Mechanical Vacuum Pump	12-30
12.4	GASEOUS EFFLUENTS	12-31
	A. Gaseous Effluents Limits and Reporting Operability	12-31
	1. Dose Rate	12-31
	2. Noble Gas Dose	12-31
	3. Iodine-131, Iodine-133, Tritium and Particulate Dose	12-32
	4. Off-Gas Treatment	12-33
	5. Main Condenser Air Ejector	12-34
	6. System Operability and Plant Operations	12-34
	B. Gaseous Effluents Surveillance	12-35
	1. Dose Rate	12-35
	2. Noble Gas Dose	12-35
	3. Iodine-131, Iodine-133, Tritium and Particulate Dose	12-35
	4. Off-Gas Treatment	12-35
	5. Noble Gases at the Main Condenser Air Ejector	12-36

CHAPTER 12

RADIOLOGICAL EFFLUENT TECHNICAL STANDARDS (RETS) TABLE OF CONTENTS CONTINUED

		PAGE
12.4	GASEOUS EFFLUENTS (Cont'd)	
	C. Gaseous Effluents Bases	12-42
	1. Gaseous Effluents, Dose	12-42
	2. Dose, Noble Gases	12-42
	3. Dose, Radioiodines, Radioactive Material in Particulate Form and Radionuclides Other than Noble Gases	12-43
	4. Gaseous Waste Treatment	12-43
12.5	RADIOLOGICAL ENVIRONMENTAL MONITORING PROGRAM	12-44
	1. Monitoring Program	12-44
	2. Land Use Census	12-58
	3. Interlaboratory Comparison Program	12-59
12.6	RECORDKEEPING AND REPORTING	12-60
	1. Station Operating Records	12-60
	2. Reports	12-60
	1. Radioactive Effluent Release Report	12-60
	2. Annual Radiological Environmental Operating Report	12-61
	3. Non-Routine Environmental Report	12-62
	3. Offsite Dose Calculation Manual (ODCM)	12-62
	4. Major Changes to Radioactive Waste Treatment Systems (Liquid and Gaseous)	12-63

CHAPTER 12

RADIOLOGICAL EFFLUENT TECHNICAL STANDARDS (RETS) LIST OF TABLES

NUMBER	TITLE	PAGE
12.1-1	Surveillance Frequency Notation	12-4
12.1-2	Modes	12-5
12.2-1	Radioactive Liquid Effluent Monitoring Instrumentation	12-8
12.2-2	Radioactive Liquid Effluent Monitoring Instrumentation Surveillance Requirements	12-9
12.2-3	Radioactive Gaseous Effluent Monitoring Instrumentation	12-11
12.2-4	Radioactive Gaseous Effluent Monitoring Instrumentation Surveillance Requirements	12-15
12.3-1	Allowable Concentration of Dissolved or Entrained Noble Gases Released from the Site to Unrestricted Areas in Liquid Waste	12-23
12.3-2	Radioactive Liquid Waste Sampling and Analysis Program	12-24
12.4-1	Radioactive Gaseous Waste Sampling and Analysis Program	12-37
12.5-1	Radiological Environmental Monitoring Program	12-47
12.5-2	Reporting Levels for Radioactivity Concentrations in Environmental Samples Reporting Levels	12-53
12.5-3	Detection Capabilities for Environmental Sample Analysis Lower Limit of Detection	12-54

12.0 RADIOLOGICAL EFFLUENT TECHNICAL STANDARDS

12.1 DEFINITIONS

1. Channel Calibration - A Channel Calibration shall be the adjustment, as necessary, of the channel output such that it responds within the necessary range and accuracy to known values of the parameter that the channel monitors. The Channel Calibration shall encompass the entire channel, including the required sensor, alarm, display and trip functions, and shall include the Channel Functional Test. Calibration of instrument channels with resistance temperature detector (RTD) or thermocouple sensors may consist of an inplace qualitative assessment of sensor behavior and normal calibration of the remaining adjustable devices in the channel. The Channel Calibration may be performed by means of any series of sequential, overlapping, or total channel steps so that the entire channel is calibrated.

2. Channel Check - A Channel Check shall be a qualitative assessment, by observation, of channel behavior during operation. This determination shall include, where possible, comparison of the channel indication and status to other indications or status derived from independent instrument channels measuring the same parameter.

3. Channel Functional Test - A Channel Functional Test shall be the injection of a simulated or actual signal into the channel as close to the sensor as practicable to verify Operability, including required alarm, interlock, display, and trip functions, and channel failure trips. The Channel Functional Test may be performed by means of any series of sequential, overlapping, or total channel steps so that the entire channel is tested.

4. Continuous Sampling - Uninterrupted sampling with the exception of sampling interruptions of short duration (no longer than 2 hours) for required surveillances.

5. Dose Equivalent I-131 - That concentration of I-131 (microcuries/gram) that alone would produce the same thyroid dose as the quantity and isotopic mixture of I-131, I-132, I-133, I-134, and I-135 actually present. The thyroid dose conversion factors used for this calculation shall be those listed in Table III of TID -14844, AEC, 1962", Calculation of Distance Factors for Power and Test Reactor Sites"; Table E-7 of Regulatory Guide 1.109, Rev. 1, NRC, 1977; or ICRP 30, Supplement to Part 1, pages 192-212, Table titled, "Committed Dose Equivalent in Target Organs or Tissues per Intake of Unit Activity."

6. Frequency - Table 12.1-1 provides the definitions of various frequencies for which surveillances, sampling, etc., are performed unless defined otherwise. For Unit 1, each surveillance requirement shall be performed within the specified Surveillance Frequency time interval with a maximum allowable extension not to exceed 25% of the Surveillance interval. The Bases to Technical Specification SR 3.0.2 (for Units 2 and 3) provides clarification to this statement. For Units 2 and 3, the provisions of Technical Specifications SR 3.0.2 and SR 3.0.3 are applicable. The 25% Surveillance interval extension and the provisions of SR 3.0.2 and SR 3.0.3 do not apply to the Radiological Environmental Monitoring Program (Section 12.5).

7. Immediate - Immediate means that the required action should be pursued without delay in a controlled manner.

8. Member of the Public – Member of the Public means any individual except when that individual is receiving an occupational dose.

12.1 DEFINITIONS (Cont'd)

9. Mode - A Mode shall correspond to any one inclusive combination of mode switch position, average reactor coolant temperature, and reactor vessel head closure bolt tensioning specified in Table 12.1-2 with fuel in the reactor vessel.

10. Occupational Dose -The dose received by an individual in the course of employment in which the individual's assigned duties involve exposure to radiation and/or to radioactive material from licensed and unlicensed sources of radiation, whether in the possession of the licensee or other person. Occupational dose does not include dose from background radiation, as a patient from medical practices, from voluntary participation in medical research programs, or as a member of the public.

11. The Offsite Dose Calculation Manual (ODCM)

    a. The ODCM shall contain the methodology and parameters used in the calculation of offsite doses resulting from radioactive gaseous and liquid effluents, in the calculation of gaseous and liquid effluent monitoring alarm and trip setpoints, and in the conduct of the Radiological Environmental Monitoring Program.

    b. The ODCM shall also contain the radioactive effluent controls and radiological environmental monitoring activities and descriptions of the information that should be included in the Annual Radioactive Effluent Release and Radiological Environmental Operating Reports required by Sections 12.6.2.1 and 12.6.2.2.

12. Operable-Operability - A system, subsystem, division, component, or device shall be Operable or have Operability when it is capable of performing its specified safety function(s) and when all necessary attendant instrumentation, controls, normal or emergency electrical power, cooling and seal water, lubrication and other auxiliary equipment that are required for the system, subsystem, division, component, or device to perform its specified safety function(s) are also capable of performing their related support function(s).

13. The Process Control Program (PCP) – The PCP shall contain the current formulas, sampling, analyses, test, and determinations to be made to ensure that processing and packaging of solid radioactive wastes based on demonstrated processing of actual or simulated wet solid wastes will be accomplished in such a way as to assure compliance with 10 CFR Parts 20, 61, and 71, State regulations, burial ground requirements, and other requirements governing the disposal of solid radioactive waste.

14. Public Dose means the dose received by a member of the public from exposure to radiation or radioactive material released by a licensee, or to any other source of radiation under the control of a licensee. Public dose does not include occupational dose or doses received from background radiation, from any medical administration the individual has received, from exposure to individuals administered radioactive material and released in accordance with 10CFR35.75, or from voluntary participation in medical research programs.

15. Rated Thermal Power (RTP) – Prior to implementation of Extended Power Uprate (EPU), a unit's RTP shall be a total reactor core heat transfer rate to the reactor coolant of 2527 thermal megawatts. After implementation of EPU, a unit's RTP shall be a total reactor core heat transfer rate to the reactor coolant of 2957 thermal megawatts.

16. Reactor Power Operation - Reactor power operation is any operation with the mode switch in the "Startup/Hot Standby" or "Run" position with the reactor critical and above 1% rated thermal power.

12.1 DEFINITIONS (Cont'd)

17. Source Check – Source Check is the qualitative assessment of channel response when the channel sensor is exposed to a radioactive source.

18. Definitions Related to Estimating Dose to the Public Using the ODCM Computer Program:

    1. Actual - Refers to using known release data to project the dose to the public for the previous month. These data are stored in the database and used to demonstrate compliance with the reporting requirements of Chapter 12.

    2. Projected - Refers to using known release data from the previous month or estimated release data to forecast a future dose to the public. These data are NOT incorporated into the database.

TABLE 12.1-1

SURVEILLANCE FREQUENCY NOTATION

NOTATION	FREQUENCY
S (Shiftly)	At least once per 12 hours
D (Daily)	At least once per 24 hours
T	At least once per 72 hours
W (Weekly)	At least once per 7 days
M (Monthly)	At least once per 31 days
Q (Quarterly)	At least once per 92 days
SA (Semiannually)	At least once per 184 days
A (Annually)	At least once per 366 days
E (Sesquiannually)	At least once per 18 months (550 days)
B (Biennially)	At least once per 24 months (731 days)
S/U (Startup)	Prior to each reactor startup
NA (Not Applicable)	Not applicable

TABLE 12.1-2

MODES

MODE	TITLE	MODE SWITCH POSITION	AVERAGE REACTOR COOLANT TEMPERATURE °F
1	POWER OPERATION	Run	NA
2	STARTUP	Refuel[a] or Startup/Hot Standby	NA
3	HOT SHUTDOWN[a]	Shutdown	>212
4	COLD SHUTDOWN[a]	Shutdown[b]	≤212
5	REFUELING[b]	Shutdown or Refuel	NA

TABLE NOTATIONS

[a] All reactor vessel head closure bolts fully tensioned.

[b] One or more vessel head closure bolts less than fully tensioned.

12.2 INSTRUMENTATION

A. Radioactive Liquid Effluent Monitoring Instrumentation

1. Radioactive Liquid Effluent Monitoring Instrumentation Operability

1. The effluent monitoring instrumentation shown in Table 12.2-1 shall be operable with alarm trip setpoints set to ensure that the limits of Section 12.3.A are not exceeded. The alarm setpoints shall be determined in accordance with the ODCM.

2. With a radioactive liquid effluent monitoring instrument alarm/trip setpoint less conservative than required, immediately suspend the release of radioactive liquid effluents monitored by the affected instrument, or declare the instrument inoperable, or change the setpoint so it is acceptably conservative.

3. With one or more radioactive liquid effluent monitoring instruments inoperable, take the action shown in Table 12.2-1. Restore the instrument to operable status within 30 days and, if unsuccessful, explain why the inoperability was not corrected in a timely manner in the next Radioactive Effluent Release Report.

4. In the event operability requirements and associated action requirements cannot be satisfied, no changes are required in the operational condition of the plant, and this does not prevent the plant from entry into any operational mode.

2. Radioactive Liquid Effluent Monitoring Instrumentation Surveillance

1. Each radioactive liquid effluent monitoring instrument shown in Table 12.2-2 shall be demonstrated operable by performance of the given Source Check, Channel Check, Channel Calibration, and Channel Functional Test operations at the frequencies shown in Table 12.2-2.

B. Radioactive Gaseous Effluent Monitoring Instrumentation

1. Radioactive Gaseous Effluent Monitoring Instrumentation Operability

1. The effluent monitoring instrumentation shown in Table 12.2-3 shall be operable with alarm/trip setpoints set to ensure that the limits of Section 12.4.A are not exceeded. The alarm/trip setpoints shall be determined in accordance with the ODCM.

2. With a radioactive gaseous effluent monitoring instruments alarm/trip setpoint less conservative than required, immediately suspend the release of radioactive gaseous effluents monitored by the affected instrument, or declare the instrument inoperable, or change the setpoint so it is acceptably conservative.

12.2.B.1 Radioactive Gaseous Effluent Monitoring Instrumentation Operability (Cont'd)

3. With one or more radioactive gaseous effluent monitoring instruments inoperable, take the action shown in Table 12.2-3. Restore the instrument to operable status within 30 days and, if unsuccessful, explain why the inoperability was not corrected in a timely manner in the next Radioactive Effluent Release Report.

4. The Unit 2/3 plant chimney gas sampling system may be out of service for 48 hours for the purpose of servicing the high range noble gas monitor as long as the following conditions are satisfied:

   1. Both units are at steady state conditions with the recombiners and charcoal absorbers in service for the operating unit(s).

   2. The dose rate in unrestricted areas must be shown by calculation to be less than the limits of 12.4.A assuming the charcoal absorbers are bypassed on both units.

   3. Both offgas monitors on Unit 2 and Unit 3 must be operational and the monitor reading correlated to the chimney release rate based on the conservative assumption of both units' charcoal absorbers being bypassed.

   4. If the provisions of 12.4.A.1.1, 12.4.A.1.2, or 12.4.A.1.3 cannot be met, an orderly load reduction of the unit(s) shall be initiated immediately.

5. In the event operability requirements and associated action requirements cannot be satisfied, no changes are required in the operational condition of the plant, and this does not prevent the plant from entry into any operation mode.

2. Radioactive Gaseous Effluent Monitoring Instrumentation Surveillance

Each radioactive gaseous radiation monitoring instrument in Table 12.2-4 shall be demonstrated operable by performance of the given Source Check, Channel Check, Channel Calibration, and Channel Functional Test operations at the frequency shown in Table 12.2-4.

TABLE 12.2-1

RADIOACTIVE LIQUID EFFLUENT MONITORING INSTRUMENTATION

UNITS 2 & 3

	Instrument	Minimum Channels Operable	Total No. of Channels	Action
1.	Service Water Effluent Gross Activity Monitor	1	1	10
2.	Liquid Radwaste Effluent Gross Activity Monitor[1]	1	1	11

ACTIONS

ACTION 10 - With less than the minimum number of operable channels, releases via this pathway may continue, provided that at least once per 12 hours grab samples are collected and analyzed for beta or gamma activity at an LLD of less than or equal to $5x10^{-7}$ uCi/ml.

(The grab sample should normally be taken at the Service Water Monitor or at a location which would be representative of the Service Water which is monitored.)

ACTION 11 - With less than a minimum number of operable channels, effluent releases via this pathway may continue, provided that prior to initiating a release, at least 2 independent samples are analyzed, and at least 2 members of the facility staff independently verify the release calculation and discharge valving. Otherwise, suspend release of radioactive effluent via this pathway.

[1] Effluent release via this pathway may continue when either:

1. The flow through the monitor cannot be established and maintained within design parameters, or
2. Effluent activity is below the range of detection for the monitor.

Provided that prior to initiating a release, at least 2 independent samples are analyzed, and at least 2 members of the facility staff independently verify the release calculations and discharge valving.

Otherwise suspend release of radioactive effluent via this pathway.

TABLE 12.2-2

RADIOACTIVE LIQUID EFFLUENT MONITORING
INSTRUMENTATION SURVEILLANCE REQUIREMENTS

UNITS 2 & 3

	Instrument	Channel Functional Test[a][f]	Channel Calibration[b][f]	Channel Check[f]	Source Check
1.	Service Water Effluent Gross Activity Monitor	Q[e]	B[c]	D	B
2.	Liquid Radwaste Effluent Gross Activity Monitor	Q[e]	B[c]	D	B[d]

TABLE 12.2-2 (Cont'd)

RADIOACTIVE LIQUID EFFLUENT MONITORING
INSTRUMENTATION SURVEILLANCE REQUIREMENTS

TABLE NOTATIONS

(a) The Channel Functional Test shall also demonstrate that control room alarm annunciation occurs, if any of the following conditions exist, where applicable.

1. Instrument indicated levels above the alarm setpoint.
2. Circuit failure.
3. Instrument indicates a downscale failure.
4. Instrument controls not set in OPERATE mode.

(b) Channel Calibration shall include performance of a Channel Functional Test.

(c) Channel Calibration shall include performance of a Source Check.

(d) Source Check shall consist of observing instrument response during a discharge.

(e) Channel Functional Tests may be performed by using trip check and test circuitry associated with the monitor chassis.

(f) Channel Functional Tests, Channel Calibrations, and Channel Checks are not required when these instruments are not required to be operable or are tripped.

TABLE 12.2-3

RADIOACTIVE GASEOUS EFFLUENT MONITORING INSTRUMENTATION

UNIT 1

Instrument	Minimum Channels Operable	Total No. of Channels	Applicable Operational Modes	Action
1. Main Chimney SPING Noble Gas Monitor	1	3	*	27
2. Main Chimney Particulate Sampler	1	1	*	22
3. Main Chimney Iodine Sampler	1	1	*	22

* At all times.

TABLE 12.2-3

RADIOACTIVE GASEOUS EFFLUENT MONITORING INSTRUMENTATION

UNITS 2 & 3

Instrument	Minimum Channels Operable	Total No. of Channels	Applicable Operational Modes	Action
1. Main Chimney Noble Gas/SPING/ GE Low Range Activity Monitor	1	3	*	20
2. Main Chimney SPING Noble Gas Monitors Mid, Hi Range (Accident Range Monitor)	1	1	*	26
3. Main Chimney Iodine Sampler	1	1	*	22
4. Main Chimney Particulate Sampler	1	1	*	22
5. Main Chimney Flow Rate Monitor	1	1	*	21
6. Main Chimney Sampler Flow Rate Monitor	1	1	*	21
7. Reactor Building Vent Exhaust Duct Radiation Monitor	See Technical Specification 3.3.6.2			
8. Reactor Building Vent SPING Noble Gas Monitor Low, Mid, High Range	1	1	*	25
9. Reactor Building Vent Flow Rate Monitor	1	1	*	21
10. Reactor Building Vent Sampler Flow Rate Monitor	1	1	*	21
11. Reactor Building Vent Iodine Sampler	1	1	*	22
12. Reactor Building Vent Particulate Sampler	1	1	*	22
13. Offgas Radiation Activity Monitor	1	2	**	28

* At all times.
** During Steam Jet Air Ejector operation.

TABLE 12.2-3 (Cont'd)
RADIOACTIVE GASEOUS EFFLUENT MONITORING INSTRUMENTATION
ACTIONS AND TABLE NOTATIONS

ACTION 20 - With less than the minimum channels operable, effluent releases via this pathway may continue provided grab samples are taken at least once every 8 hours and analyzed for noble gas within 24 hours.

ACTION 21 - With the number of operable channels less than the minimum required, effluent releases via this pathway may continue provided that the flow rate is estimated at least once per 4 hours.

ACTION 22 - With less than the minimum channels operable, effluent releases via this pathway may continue provided samples are continuously collected with auxiliary sampling equipment, as required in Table 12.4-1.

ACTION 25 - With less than the minimum channels operable, effluent releases via this pathway may continue provided that the minimum number of operable channels for the Reactor Building Vent Exhaust Duct Radiation Monitor are operable.

ACTION 26- With less than the minimum channels operable, initiate a alternate method of monitoring the appropriate parameter(s) within 72 hours, and

(a) Restore the inoperable equipment to operable status within 21 days, or

(b) prepare and submit a report to the Commission within the next 30 days outlining the plans, actions taken and procedures to be used to provide for the loss of sampling capability of the system.

ACTION 27 - With less than the minimum channels operable, effluent releases via this pathway may continue provided noble gas samples are taken and analyzed once per day .

ACTION 28 - With less than the minimum channels operable, gases from the main condenser off gas system may be released to the environment for up to 72 hours provided the off gas system is not bypassed and at least one chimney monitor is operable; otherwise, be in MODE 2 in 12 hours.

TABLE 12.2-4

RADIOACTIVE GASEOUS EFFLUENT MONITORING
INSTRUMENTATION SURVEILLANCE REQUIREMENTS

UNIT 1

	Instrument	Channel Functional Test[(a)(e)]	Channel Calibration[(b)]	Channel Check	Source Check	Applicable Operational Modes
1.	Main Chimney SPING Noble Gas Monitor Low Range	Q	E	D	M	*

*At all times.

TABLE 12.2-4

RADIOACTIVE GASEOUS EFFLUENT MONITORING
INSTRUMENTATION SURVEILLANCE REQUIREMENTS

UNITS 2 & 3

Instrument	Channel Functional Test[a][e]	Channel Calibration[b][e]	Channel Check [e]	Source Check	Applicable Operational Modes
1. Main Chimney Noble Gas Activity Monitor	Q	E	D	M	*
2. Main Chimney SPING Noble Gas Monitor Lo, Mid, High Range	Q	E	D	M	*
3. Main Chimney Particulate and Iodine Sampler	NA	NA	D[c]	NA	*
4. Main Chimney Flow Rate Monitor	Q	B	D	NA	*
5. Main Chimney Sampler Flow Rate Monitor	Q[d]	B	D	NA	*
6. Reactor Bldg Vent Exhaust Duct Radiation Monitor	See Technical Specification 3.3.6.2				
7. Reactor Bldg Vent SPING Noble Gas Monitor Lo, Mid, High Range	Q	E	D	M	*
8. Reactor Bldg Vent Flow Rate Monitor	Q	B	D	NA	*
9. Reactor Bldg Sampler Flow Rate Monitor	Q[d]	B	D	NA	*
10. Reactor Bldg Vent Particulate and Iodine Sampler	NA	NA	D[c]	NA	*
11. Off Gas Radiation Activity Monitor	Q	B	D	B	**

* At all times.
** During Steam Jet Air Ejector operation.

TABLE 12.2-4 (Cont'd)

RADIOACTIVE GASEOUS EFFLUENT MONITORING
INSTRUMENTATION SURVEILLANCE REQUIREMENTS

TABLE NOTATIONS

(a) The Channel Functional Test shall also demonstrate that control room alarm annunciation occurs, if any of the following conditions exist, where applicable.

1. Instrument indicates levels above the alarm setpoint.

2. Circuit failure.

3. Instrument indicates a downscale failure.

4. Instrument controls not set in OPERATE mode.

(b) Channel Calibration shall include performance of a Channel Functional Test.

(c) Channel Check to verify operability of sampler; that the sampler is in place and functioning properly.

(d) Channel Functional Test shall be performed on local switches providing low flow alarm.

(e) Channel Functional Tests, Channel Calibrations, and Channel Checks are not required when these instruments are not required to be operable or are tripped.

12.2.C Liquid And Gaseous Effluents Instrumentation Bases

1. The radioactive liquid and gaseous effluent instrumentation is provided to monitor the release of radioactive materials in liquid and gaseous effluents during releases. The alarm setpoints for the instruments are provided to ensure that the alarms will occur prior to exceeding the limits of RETS.

12.3 LIQUID EFFLUENTS

12.3.A Liquid Effluents Limits and Reporting Operability

1. Concentration in Unrestricted Areas

The maximum instantaneous concentration of radioactive material released from the site to unrestricted areas (at or beyond the site boundary, Dresden Station ODCM Annex, Appendix F, Figure F-1) shall be limited to ten (I0) times the concentrations specified in Appendix B, Table 2, Column 2 to 10CFR20.1001-20.2402, for radionuclides other than dissolved or entrained noble gases. For dissolved or entrained noble gases, the concentration shall be limited to the values listed in Table 12.3-1.

With the concentration of radioactive material released from the site to unrestricted areas exceeding the above limits, without delay decrease the release rate of radioactive materials and/or increase the dilution flow rate to restore the concentration to within the above limits.

2. Dose from Liquid Effluents

The dose or dose commitment above background to a member of the public from radioactive materials in liquid effluents released to unrestricted areas (at or beyond the site boundary) from the site shall be limited to the following:

1. During any Calendar Quarter:

   (1) Less than or equal to 3 mrem to the whole body.
   (2) Less than or equal to 10 mrem to any organ.

2. During any Calendar Year:

   (1) Less than or equal to 6 mrem to the whole body.
   (2) Less than or equal to 20 mrem to any organ.

3. With the calculated dose from the release of radioactive materials in liquid effluents exceeding any of the above limits, prepare and submit a report to the Regional Administrator of the NRC Regional Office within 30 days that identifies the cause(s) and defines the corrective actions taken and the proposed actions to be taken to ensure that future releases are in compliance with Sections 12.3.A.2.1 and 12.3.A.2.2.

12.3.A Liquid Effluents Limits and Reporting Operability (Cont'd)

4. With the calculated dose from the release of radioactive materials in liquid effluents exceeding the limits of Sections 12.3.A.2.1 or 12.3.A.2.2., prepare and submit a report to the Regional Administrator of the NRC Regional Office within 30 days and limit the subsequent releases such that the dose or dose commitment to a member of the public from all uranium fuel cycle sources is limited to less than or equal to 25 mrem to the total body or any organ (except thyroid, which is limited to less than or equal to 75 mrem) over 12 consecutive months. This report shall include an analysis which demonstrates that radiation exposures to all real individuals from all uranium fuel cycle sources (including all effluent pathways and direct radiation) are less than the 40 CFR Part 190 Standard. Otherwise obtain a variance from the Commission to permit releases which exceed the 40 CFR Part 190 Standard. The radiation exposure analysis contained in the report shall use methods prescribed in the ODCM.

5. When the projected annual whole body or any internal organ dose computed at the nearest downstream community water system is equal to or exceeds 2 mrem from all radioactive materials released in liquid effluents from the Station, prepare and submit a report within 30 days to the operator of the community water system. The report is prepared to assist the operator in meeting the requirements of 40 CFR Part 141, EPA Primary Drinking Water Standards. A copy of this report will be sent to the NRC.

3. Dose Projections

At all times during processing prior to discharge to the environs, process and control equipment provided to reduce the amount or concentration of radioactive materials shall be operated when the projected dose due to liquid effluent releases to unrestricted areas (Dresden Station ODCM Annex, Appendix F, Figure F-1), when averaged over 31 days, exceeds 0.12 mrem to the total body or 0.40 mrem to any organ[a].

[a]These values represent 2% of the annual dose limits of Appendix I to 10CFR50.

12.3.A Liquid Effluents Limits and Reporting Operability (Cont'd)

4. Liquid Radioactive Waste Treatment System

If liquid waste has to be or is being discharged without treatment as required above, prepare and submit to the Commission with 30 days, a report which includes the following information.

1. Identification of the defective equipment.
2. Cause of the defect in the equipment.
3. Action(s) taken to restore the equipment to an operating status.
4. Length of time the above requirements were not satisfied.
5. Volume and curie content of the waste discharged which was not processed by the appropriate equipment but which required processing.
6. Action(s) taken to prevent a recurrence of equipment failures.

5. System Operability and Plant Operations

In the event a limit and/or associated action requirements identified in Sections 12.3.A and 12.3.B cannot be satisfied because of circumstances in excess of those addressed in this Section, no changes are required in the operational condition of the plant, and this does not prevent the plant from entry into any operational mode.

12.3.B Liquid Effluents Surveillance

1. Concentration in Unrestricted Areas

The concentration of radioactive material in unrestricted areas shall be determined to be within the prescribed limits by obtaining representative samples in accordance with the sampling and analysis program specified in Table 12.3-2. The sample analysis results will be used with the calculational methods in the ODCM to determine that the concentrations are within the limits of Section 12.3.A.1.

12.3.B Liquid Effluents Surveillance (Cont'd)

2. Dose from Liquid Effluents

The dose contribution from measured quantities of radioactive material shall be determined by calculation at least once per 31 days and cumulative summation of these total body and organ dosed shall be maintained for each calendar quarter.

Doses computed at the nearest community water system will consider only the drinking water pathway and shall be projected using the methods prescribed in ODCM, at least once per 92 days.

3. Dose Projections

Doses due to liquid releases to unrestricted areas (at or beyond the site boundary) shall be projected at least once per 31 days in accordance with the ODCM.

TABLE 12.3-1

ALLOWABLE CONCENTRATION OF DISSOLVED OR ENTRAINED NOBLE GASES RELEASED FROM THE SITE TO UNRESTRICTED AREAS IN LIQUID WASTE

NUCLIDE	AC(μCi/ml)*
Kr-85m	2×10^{-4}
Kr-85	5×10^{-4}
Kr-87	4×10^{-5}
Kr-88	9×10^{-5}
Ar-41	7×10^{-5}
Xe-131m	7×10^{-4}
Xe-133m	5×10^{-4}
Xe-133	6×10^{-4}
Xe-135m	2×10^{-4}
Xe-135	2×10^{-4}

* Computed from Equation 20 of ICRP Publication 2 (1959), adjusted for infinite cloud submersion in water, and R = 0.01 rem/week, density = 1.0 g/cc and Pw/Pt = 1.0.

TABLE 12.3-2

RADIOACTIVE LIQUID WASTE SAMPLING AND ANALYSIS PROGRAM

UNIT 1

LIQUID RELEASE TYPE	SAMPLING FREQUENCY(6)	MINIMUM ANALYSIS FREQUENCY(6)	TYPE OF ACTIVITY ANALYSIS	LOWER LIMIT OF DETECTION (LLD)(1) (µCi/ml)
Above Ground Liquid Storage Tanks	See TS 3/4.8.J	See TS 3/4.8.J	Principal Gamma Emitters(5)	$5x10^{-7}$
			Dissolved & Entrained Gases(6) (Gamma Emitters)	$1x10^{-5}$

TABLE 12.3-2
RADIOACTIVE LIQUID WASTE SAMPLING AND ANALYSIS PROGRAM
UNITS 2 & 3

LIQUID RELEASE TYPE	SAMPLING FREQUENCY[6]	MINIMUM ANALYSIS FREQUENCY[6]	TYPE OF ACTIVITY ANALYSIS	LOWER LIMIT OF DETECTION (LLD)[1] (µCi/ml)
A. Batch Release Tanks	Prior to Each Batch	Prior to Each Batch	Principal Gamma Emitters[5] I-131	$5x10^{-7}$ $1x10^{-6}$
	Prior to Each Batch	M Composite[2]	Gross Alpha H-3	$1x10^{-7}$ $1x10^{-5}$
	Prior to Each Batch	Q Composite [2]	Fe-55 Sr-89, Sr-90	$1x10^{-6}$ $5x10^{-8}$
	Prior to One Batch/M	M	Dissolved & Entrained Gases [6] (Gamma Emitters)	$1x10^{-5}$
B. Plant Continuous Releases[4]	M[3] (Grab Sample)	M[3]	I-131	$1x10^{-6}$
	M[3] (Grab Sample)	M[3]	Principal Gamma Emitters[5]	$5x10^{-7}$
	M[3] (Grab Sample)	M[3]	Dissolved & Entrained Gases[6] (Gamma Emitters)	$1x10^{-5}$
	M[3] (Grab Sample)	M[3]	H-3	$1x10^{-5}$
			Gross Alpha	$1x10^{-7}$
	Q[3] (Grab Sample)	Q[3]	Sr-89, Sr-90	$5x10^{-8}$
			Fe-55	$1x10^{-6}$
C. Above Ground Liquid Storage Tanks	See Technical Requirements Manual	See Technical Requirements Manual	Principal Gamma Emitters[5] Dissolved & Entrained Gases[6] (Gamma Emitters)	$5x10^{-7}$ $1x10^{-5}$

TABLE 12.3-2 (Cont'd)
RADIOACTIVE LIQUID WASTE SAMPLING AND ANALYSIS PROGRAM
TABLE NOTATION

(1) The LLD is defined, for purposes of these specifications, as the smallest concentration of radioactive material in a sample that will yield a net count, above system background, that will be detected with 95% probability with only 5% probability of falsely concluding that a blank observation represents a "real" signal.

For a particular measurement system, which may include radiochemical separation:

$$LLD = \frac{4.66S_b}{E \bullet V \bullet 2.22 \times 10^6 \bullet Y \bullet \exp(-\lambda\Delta t)}$$

Where:

LLD = the lower limit of detection (microCuries per unit mass or volume),

s_b = the standard deviation of the background counting rate or of the counting rate of a blank sample as appropriate (counts per minute),

E = the counting efficiency (counts per disintegration),

V = the sample size (units of mass or volume),

2.22×10^6 = the number of disintegrations per minute per microCurie,

Y = the fractional radiochemical yield, when applicable,

λ= the radioactive decay constant for the particular radionuclide (sec^{-1}), and

Δt = the elapsed time between the midpoint of sample collection and the time of counting (sec).

Typical values of E, V, Y, and Δt should be used in the calculation.

Alternate LLD Methodology

An alternate methodology for LLD determination follows and is similar to the above LLD equation:

$$LLD = \frac{(2.71 + 4.65\sqrt{B}) \bullet \text{Decay}}{E\ q\ b\ Y\ t\ (2.22E06)}$$

TABLE 12.3-2 (Continued)
RADIOACTIVE LIQUID WASTE SAMPLING AND ANALYSIS PROGRAM
TABLE NOTATION

Where:

B = background sum (counts)

E = counting efficiency, (counts detected/disintegrations)

q = sample quantity, (mass or volume)

b = abundance, (if applicable)

Y = fractional radiochemical yield or collection efficiency, (if applicable)

t = count time (minutes)

2.22E06 = number of disintegrations per minute per microCurie

$(2.71 + 4.65\sqrt{B}) = k^2 + (2k \sqrt{2} \sqrt{B})$, and k = 1.645.

(k=value of the t statistic from the single-tailed t distribution at a significance level of 0.95% and infinite degrees of freedom. This means that the LLD result represents a 95% detection probability with a 5% probability of falsely concluding that the nuclide present when it is not or that the nuclide is not present when it is.)

Decay = $e^{\lambda\Delta t} [\lambda RT/(1-e^{-\lambda RT})] [\lambda T_d/(1-e^{-\lambda Td})]$, (if applicable)

λ = radioactive decay constant, (units consistent with Δt, RT and T_d)

Δt = "delta t", or the elapsed time between sample collection or the midpoint of sample collection and the time the count is started, depending on the type of sample, (units consistent with λ)

RT = elapsed real time, or the duration of the sample count, (units consistent with λ)

T_d = sample deposition time, or the duration of analyte collection onto the sample media, (unit consistent with λ)

The LLD may be determined using installed radioanalytical software, if available. In addition to determining the correct number of channels over which to total the background sum, utilizing the software's ability to perform decay corrections (i.e. during sample collection, from sample collection to start of analysis and during counting), this alternate method will result in a more accurate determination of the LLD.

It should be recognized that the LLD is defined as a before the fact limit and not as an after the fact limit for a particular measurement.

TABLE 12.3-2 (Cont'd)
RADIOACTIVE LIQUID WASTE SAMPLING AND ANALYSIS PROGRAM
TABLE NOTATION

(2) A composite sample is one in which the quantity of liquid samples is proportional to the quantity of liquid waste discharged and in which the method of sampling employed results in a specimen which is representative of the liquids released.

(3) If the alarm setpoint of the service water effluent monitor as determined in the ODCM is exceeded, the frequency of analysis shall be increased to daily until the condition no longer exists.

(4) A batch release is the discharge of liquid wastes of a discrete volume. Prior to sampling for analyses, each batch shall be isolated and then thoroughly mixed to assure representative sampling. A continuous release is the discharge of liquid wastes of a nondiscrete volume; e.g., from a volume or system that has an input flow during the release.

(5) The principal gamma emitters for which the LLD specification applies exclusively are the following radionuclides: Mn-54, Fe-59, Co-60, Zn-65, Co-58, Mo-99, Cs-134, Cs-137, Ce-141. Ce-144 shall also be measured, but with an LLD of 5E-06. Other peaks which are measurable and identifiable by gamma ray spectrometry together with the above nuclides, shall be also identified and reported when the actual analysis is performed on a sample. Nuclides which are below the LLD for the analyses shall not be reported as being present at the LLD level for that nuclide.

(6) The dissolved and entrained gases (gamma emitters) for which the LLD specification applies exclusively are the following radionuclides: Kr-87, Kr-88, Xe-133, Xe-133m, Xe-135, and Xe-138. Other dissolved and entrained gases (gamma emitters) which are measurable and identifiable by gamma ray spectrometry, together with the above nuclides, shall also be identified and reported when an actual analysis is performed on a sample. Nuclides which are below the LLD for the analyses shall not be reported as being present at the LLD level for that nuclide.

12.3.C LIQUID EFFLUENTS BASES

1. Concentration

This specification is provided to ensure that the concentration of radioactive materials released in liquid waste effluents from the site to unrestricted areas will be less than the concentration levels specified in Appendix B, Table 2, Column 2 to 10CFR20.1001-20.2402.

2. Dose

This specification is provided to implement the requirements of Sections II.A, III.A and IV.A of Appendix I, 10 CFR Part 50. The operational requirements implements the guides set forth in Section II.A of Appendix I. The statements provide the required operating flexibility and at the same time implement the guides set forth in Section IV.A of Appendix I to assure that the releases of radioactive material in liquid effluents will be kept "as low as reasonably achievable". The dose calculations in the ODCM implement the requirements in Section III.A of Appendix I that conformance with the guides of Appendix I be shown by calculational procedures based on models and data such that the actual exposure of an individual through appropriate pathways is unlikely to be substantially underestimated. The equations specified in the ODCM for calculating the doses due to the actual release rates of radioactive materials in liquid effluents will be consistent with the methodology provided in Regulatory Guide 1.109, "Calculation of Annual Doses to Man from Routine Releases of Reactor Effluents for the Purpose of Evaluating Compliance with 10 CFR Part 50, Appendix I", Revision 1, October 1977 and Regulatory Guide 1.113, "Estimating Aquatic Dispersion of Effluents from Accidental and Routine Reactor Releases for the Purpose of Implementing Appendix I", April 1977. NUREG-0113 provides methods for dose calculations consistent with Reg Guide 1.109 and 1.113.

3. Liquid Waste Treatment

The operability of the liquid radwaste treatment system ensures that this system will be available for use whenever liquid effluents require treatment prior to release to the environment. The requirement that the appropriate portions of this system be used when specified provides assurance that the releases of radioactive materials in liquid effluents will be kept "as low as reasonably achievable". This specification implements the requirements of 10 CFR Part 50.36a, General Design Criterion 60 of Appendix A to 10 CFR Part 50 and design objective Section 11.D of Appendix I to 10 CFR Part 50.

12.3.C LIQUID EFFLUENTS BASES - (Continued)

4. Mechanical Vacuum Pump

The purpose of isolating the mechanical vacuum line is to limit release of activity from the main condenser. During an accident, fission products would be transported from the reactor through the main steam line to the main condenser. The fission product radioactivity would be sensed by the main steamline radioactivity monitors which initiate isolation.

12.4 GASEOUS EFFLUENTS

A. Gaseous Effluents Limits and Reporting Operability

1. Dose Rate

The dose rate in unrestricted areas at or beyond the site boundary (Dresden Station ODCM Annex, Appendix F, Figure F-1) due to radioactive materials released in gaseous effluents from the site shall be limited to the following.

1. For Noble Gases:

   (1) Less than a dose rate of 500 mrem/year to the whole body.
   (2) Less than a dose rate of 3000 mrem/year to the skin.

2. For iodine-131, for iodine-133, tritium and for all radionuclides in particulate form with half-lives greater than 8 days, less than a dose rate of 1500 mrem/year.

3. If the dose rates exceed the above limits, without delay decrease the release rates to bring the dose rates within the limits, and provide notification to the Commission (per 10 CFR Part 20.2203).

2. Noble Gas Dose

The air dose in unrestricted areas at or beyond the site boundary due to noble gases released in gaseous effluents from the unit shall be limited to the following:

1. For Gamma Radiation

   (1) Less than or equal to 5 mrad during any calendar quarter.
   (2) Less than or equal to 10 mrad during any calendar year.

2. For Beta Radiation

   (1) Less than or equal to 10 mrad during any calendar quarter.
   (2) Less than or equal to 20 mrad during any calendar year.

3. With the calculated air dose from radioactive noble gases in gaseous effluents exceeding any of the above limits, prepare and submit a report to the Regional Administrator of the NRC Regional Office within 30 days, that identifies the cause(s) for exceeding the limit(s) and defines the corrective actions to be taken to ensure that future releases are in compliance with Sections 12.4.A.2.1 and 12.4.A.2.2.

12.4.A Gaseous Effluents Limits and Reporting Operability (Cont'd)

4. With the calculated air dose from radioactive noble gases in gaseous effluents exceeding the limits of Sections 12.4.A.2.1 or 12.4.A.2.2, prepare and submit a report to the Regional Administrator of the NRC Regional Office within 30 days and limit the subsequent releases such that the doses or dose commitment to a member of the public from all uranium fuel cycle sources is limited to less than or equal to 25 mrem to the total body or any organ (except thyroid, which is limited to less than or equal to 75 mrem) over 12 consecutive months. This report shall include an analysis which demonstrates that radiation exposures to all members of the public from all uranium fuel cycle sources (including all effluent pathways and direct radiation) are less than 40 CFR Part 190 Standard. Otherwise, obtain a variance from the Commission to permit releases which exceed the 40CFR Part 190 Standard. The radiation exposure analysis contained in the report shall use the methods prescribed in the ODCM.

5. Process and control equipment provided to reduce the amount or concentration of radioactive materials shall be operated when the projected dose due to gaseous effluents released to the unrestricted areas, when averaged over 31 days, exceeds 2% of the annual dose limits of Appendix I to 10CFR50.

3. Iodine-131, Iodine-133, Tritium, and Particulate Dose

The dose to a member of the public in unrestricted areas at or beyond the site boundary from iodine-131, iodine-133, tritium, and all radionuclides in particulate form with half-lives greater than 8 days in gaseous effluents released from the unit shall be limited to the following.

1. Less than or equal to 7.5 mrem to any organ during any calendar quarter.

2. Less than or equal to 15 mrem to any organ during any calendar year.

3. With the calculated dose from the release of iodine-131, iodine-133, tritium, and all radionuclides in particulate form with half-lives greater than 8 days in gaseous effluents exceeding any of the above limits, prepare and submit a report to the Regional Administrator of the NRC Regional Office within 30 days, that identifies the cause(s) for exceeding the limit and defines the corrective actions taken to ensure that future releases are in compliance with Section 12.4.A.3.1 and 12.4.A.3.2.

4. With the calculated dose from the release of iodine-131, iodine-133, tritium, and all radionuclides in particulate form with half-lives greater than 8 days in gaseous effluents exceeding the limits of Sections 12.4.A.3.1. or 12.4.A.3.2., prepare and submit a report to the Regional Administrator of the NRC Regional Office within 30 days and limit subsequent releases such that the dose or dose commitment to a member of the public from all uranium fuel is limited to less than or equal to 25 mrem to the total body or organ (except the thyroid, which is limited to less than or equal to 75 mrem) over 12 consecutive months. This report shall include an analysis which demonstrates that radiation exposures to all members of the public from all uranium fuel cycle sources (including all effluent pathways and direct radiation) are less than the 40 CFR Part 190 Standard. Otherwise, obtain a variance from the Commission to permit releases which exceed the 40 CFR Part 190 Standard. The radiation exposure analysis contained in the report shall use the methods prescribed in the ODCM.

12.4.A Gaseous Effluents Limits and Reporting Operability (Cont'd)

5. Process and control equipment provided to reduce the amount or concentration of radioactive materials shall be operated when the projected dose due to gaseous effluents released to the unrestricted areas, when averaged over 31 days, exceeds 2% of the annual dose limits of Appendix I to 10CFR50.

4. Off-Gas Treatment

1. At all times during processing for discharge to the environs, process and control equipment provided to reduce the amount of concentration of radioactive materials shall be operated.

2. The above specification shall not apply for the Off-Gas Charcoal Adsorber Beds below 30% RTP.

3. The recombiner shall be operable whenever the reactor is operating at a pressure greater than 900 psig.

4. The recombiner may be inoperable for 48 hours.

5. With either the recombiners inoperable, or all charcoal beds by-passed for more than 7 days in a calendar quarter while operating above 30% RTP, prepare and submit a report to the Regional Administrator of the NRC Regional Office within 30 days that includes the following information.

a. Identification of the defective equipment.

b. Cause of the defect in the equipment.

c. Action(s) taken to restore the equipment to an operating status.

d. Length of time the above requirements were not satisfied.

e. Volume and curie content of the waste discharged which was not processed by the inoperable equipment but which required processing.

12.4.A Gaseous Effluents Limits and Reporting Operability (Cont'd)

f. Action(s) taken to prevent a recurrence of equipment failures.

5. Main Condenser Air Ejector

The release rate of the sum of the activities from the noble gases measured at the main condenser air ejector shall be limited to ≤ 252,700 microcuries/sec (after 30 minutes decay) when in modes 1,2[a], and 3[a]. With the release rate of the sum of the activities from noble gases at the main condenser air ejector effluent (as measured prior to the offgas holdup line) > 252,700 microcuries/sec (after 30 minutes decay), restore the release rate to within its limits within 72 hours, or either isolate all main steam lines or isolate the SJAE within the next 12 hours, or be in MODE 3 in the next 12 hours and in MODE 4 in the next 24 hours. (Refer to Technical Specification 3.7.6.)

6. System Operability and Plant Operations

In the event a limit and/or associated action requirements identified in Sections 12.4.A and 12.4.B cannot be satisfied because of circumstances in excess of those addressed in this Section, no changes are required in the operational condition of the plant, and this does not prevent the plant from entry into any operational mode.

[a]With any main steam line not isolated and steam jet air ejector (SJAE) in operation.

12.4.B Gaseous Effluents Surveillance

1. Dose Rate

The dose rates due to radioactive materials released in gaseous effluents from the site shall be determined to be within the prescribed limits by obtaining representative samples in accordance with the sampling and analysis program specified in Table 12.4-1. The dose rates are calculated using methods prescribed in the ODCM.

2. Noble Gas Dose

The air dose due to releases of radioactive noble gases in gaseous effluents shall be determined to be within the prescribed limits by obtaining representative samples in accordance with the sampling and analysis program specified in Sections A and B of Table 12.4-1. The allocation of effluents between units having shared effluent control system and the determination of cumulative and projected dose contributions for the current calendar quarter and current calendar year shall be determined in accordance with the methodology and parameters in the ODCM at least once every 31 days.

3. Iodine-131, Iodine-133, Tritium and Particulate Dose

The dose to a member of the public due to releases of iodine-131, iodine-133, tritium, and all radionuclides in particulate form with half-lives greater than 8 days shall be determined to be within the prescribed limits by obtaining representative samples in accordance with the sampling and analysis program specified in Table 12.4-1.

For radionuclides not determined in each batch or weekly composite, the dose contribution to the current calendar quarter cumulative summation may be estimated by assuming an average monthly concentration based on the previous monthly or quarterly composite analyses. However, for reporting purposes, the calculated dose contributions shall be based on the actual composite analyses when possible.

The allocation of effluents between units having shared effluent control system and the determination of cumulative and projected dose contributions for the current calendar quarter and current calendar year shall be determined in accordance with the methodology and parameters in the ODCM at least once every 31 days.

4. Off-Gas Treatment

Doses due to treated gases released to unrestricted areas at or beyond the site boundary shall be projected at least once per 31 days in accordance with the ODCM.

12.4.B Gaseous Effluents Surveillance - Continued

5. Noble Gases at the Main Condenser Air Ejector

The release rate of noble gases from the main condenser air ejector shall be continuously monitored. The release rate of the sum of the activities from noble gases from the main condenser air ejector shall be determined to be within the limits of 12.4.A.5 at the following frequencies by performing an isotopic analysis of a representative sample of gases taken at the recombiner outlet, or at the air ejector outlet if the recombiner is by-passed.

1. At least once per 31 days.

2. Once within 4 hours after a ≥50% increase in the nominal steady state fission gas release after factoring out increases due to changes in thermal power level.

(Refer to Technical Specification 3.7.6.)

TABLE 12.4-1

RADIOACTIVE GASEOUS WASTE SAMPLING
AND ANALYSIS PROGRAM
UNIT 1

GASEOUS RELEASE TYPE	SAMPLING FREQUENCY	MINIMUM ANALYSIS FREQUENCY	TYPE OF ACTIVITY ANALYSIS	LOWER LIMIT OF DETECTION (LLD)[1] (µCi/ml)
A. Main Chimney	M (Grab Sample)	M	Principal Gamma Emitters [5] Tritium Noble Gases	$1x10^{-4}$ $1x10^{-6}$ $1x10^{-6}$
	M[4,6] (Continuous)	M [3] Iodine Sample	I-131 I-133	$1x10^{-12}$ $1x10^{-10}$
	M[6] (Continuous)	M [3] Particulate Sample	Principal Gamma Emitters [5]	$1x10^{-11}$
	Q (Continuous)	Q Composite Particulate Sample	Sr-89, Sr-90 Gross Alpha	$1x10^{-11}$
B. Chem Cleaning Chimney	W[7] (Continuous)	W Iodine Sample	I-131 I-133	$1x10^{-12}$ $1x10^{-10}$
	W[7] (Continuous)	W Particulate Sample	Principle Gamma Emitter [5]	$1x10^{-11}$

Table 12.4-1

RADIOACTIVE GASEOUS WASTE SAMPLING
AND ANALYSIS PROGRAM
UNITS 2 & 3

GASEOUS RELEASE TYPE	SAMPLING FREQUENCY	MINIMUM ANALYSIS FREQUENCY	TYPE OF ACTIVITY ANALYSIS	LOWER LIMIT OF DETECTION (LLD)[1] (µCi/ml)
A. Main Chimney Reactor Bldg. Vent Stack	M (Grab Sample)	M[2] M	Principal Gamma Emitters[5] Tritium	$1x10^{-4}$ $1x10^{-6}$
B. All Release Types as Listed in A above	Continuous[4]	W[3] Iodine Sample	I-131 I-133	$1x10^{-12}$ $1x10^{-10}$
	Continuous[4]	W[3] Particulate Sample	Principal Gamma Emitters [5]	$1x10^{-11}$
	Continuous[4]	Q Composite Particulate Sample	Sr-89 Sr-90	$1x10^{-11}$ $1x10^{-11}$
	Continuous[4]	Q Composite Particulate Sample	Gross Alpha	$1x10^{-11}$
C. Main Chimney	Continuous[4]	Noble Gas Monitor	Noble Gases	$1x10^{-6}$
D. Reactor Bldg. Vent Stack	Continuous[4]	Noble Gas Monitor	Noble Gases	$1x10^{-4}$

TABLE 12.4-1 (Cont'd)

RADIOACTIVE GASEOUS WASTE SAMPLING AND ANALYSIS PROGRAM
TABLE NOTATION

(1) The LLD is defined, for purposes of these specifications, as the smallest concentration of radioactive material in a sample that will yield a net count, above system background, that will be detected with 95% probability with only 5% probability of falsely concluding that a blank observation represents a "real" signal.

For a particular measurement system, which may include radiochemical separation:

$$LLD = \frac{4.66S_b}{E \bullet V \bullet 2.22 \times 10^6 \bullet Y \bullet \exp(-\lambda\Delta t)}$$

Where:

LLD = the lower limit of detection (microCuries per unit mass or volume),

s_b = the standard deviation of the background counting rate or of the counting rate of a blank sample as appropriate (counts per minute),

E = the counting efficiency (counts per disintegration),

V = the sample size (units of mass or volume),

2.22×10^6 = the number of disintegrations per minute per microCurie,

Y = the fractional radiochemical yield, when applicable,

λ= the radioactive decay constant for the particular radionuclide (sec^{-1}), and

Δt = the elapsed time between the midpoint of sample collection and the time of counting (sec).

Typical values of E, V, Y, and Δt should be used in the calculation.

Alternate LLD Methodology

An alternate methodology for LLD determination follows and is similar to the above LLD equation:

$$LLD = \frac{(2.71 + 4.65\sqrt{B}) \bullet \text{Decay}}{E\ q\ b\ Y\ t\ (2.22E06)}$$

TABLE 12.4-1 (Continued)

RADIOACTIVE GASEOUS WASTE SAMPLING AND ANALYSIS PROGRAM
TABLE NOTATIONS

Where:

B = background sum (counts)

E = counting efficiency, (counts detected/disintegrations)

q = sample quantity, (mass or volume)

b = abundance, (if applicable)

Y = fractional radiochemical yield or collection efficiency, (if applicable)

t = count time (minutes)

2.22E06 = number of disintegrations per minute per microCurie

$(2.71 + 4.65\sqrt{B}) = k^2 + (2k \sqrt{2} \sqrt{B})$, and k = 1.645.

(k=value of the t statistic from the single-tailed t distribution at a significance level of 0.95% and infinite degrees of freedom. This means that the LLD result represents a 95% detection probability with a 5% probability of falsely concluding that the nuclide present when it is not or that the nuclide is not present when it is.)

Decay = $e^{\lambda\Delta t} [\lambda RT/(1-e^{-\lambda RT})] [\lambda T_d/(1-e^{-\lambda Td})]$, (if applicable)

λ = radioactive decay constant, (units consistent with Δt, RT and T_d)

Δt = "delta t", or the elapsed time between sample collection or the midpoint of sample collection and the time the count is started, depending on the type of sample, (units consistent with λ)

RT = elapsed real time, or the duration of the sample count, (units consistent with λ)

T_d = sample deposition time, or the duration of analyte collection onto the sample media, (unit consistent with λ)

The LLD may be determined using installed radioanalytical software, if available. In addition to determining the correct number of channels over which to total the background sum, utilizing the software's ability to perform decay corrections (i.e. during sample collection, from sample collection to start of analysis and during counting), this alternate method will result in a more accurate determination of the LLD.

It should be recognized that the LLD is defined as a before the fact limit and not as an after the fact limit for a particular measurement.

TABLE 12.4-1 (Cont'd)

RADIOACTIVE GASEOUS WASTE SAMPLING AND ANALYSIS PROGRAM
TABLE NOTATION

(2) Sampling and analyses shall also be performed following shutdown, startup, or a thermal power change exceeding 20% RTP 1 hour unless (1) analysis shows that the dose equivalent I-131 concentration in the primary coolant has not increased more than a factor of 5, and (2) the noble gas activity monitor shows that effluent activity has not increased by more than a factor of 3.

(3) Samples shall be changed at least once per 7 days and the analyses completed within 48 hours after removal from the sampler. Sampling shall also be performed within 24 hours following each shutdown, startup, or thermal power level change exceeding 20% RTP in one hour. This requirement does not apply if 1) analysis shows that the dose equivalent I-131 concentration in the primary coolant has not increased more than a factor of 5, and 2) the noble gas activity monitor shows that effluent activity has not increased by more than a factor of 3. When samples collected for 24 hours are analyzed, the corresponding LLDs may be increased by a factor of 10.

(4) The ratio of sample flow rate to the sampled stream flow rate shall be known.

(5) The principal gamma emitters for which the LLD specification applies exclusively are the following radionuclides: Kr-87, Kr-88, Xe-133, Xe-133m, Xe-135, and Xe-138 for gaseous emissions, and Mn-54, Fe-59, Co-60, Zn-65, Co-58, Mo-99, Cs-134, Cs-137, Ce-141, and Ce-144 for particulate emissions. Other peaks which are measurable and identifiable by gamma ray spectrometry, together with the above nuclides, shall be also identified and reported when an actual analysis is performed on a sample. Nuclides which are below the LLD for the analyses shall not be reported as being present at the LLD level for the nuclide.

(6) Analysis frequency shall be increased to 1/week if release rates exceed 1% of any applicable limit referenced in the ODCM, when added to Units 2 and 3 airborne effluents.

(7) Gaseous Discharge from the Chemical Cleaning Building is continuously sampled through a particulate filter and iodine cartridge which are counted weekly. Sampling is not required if the Chemical Cleaning and Interim Radwaste Storage Facility (IRSF) ventilation systems are not running.

12.4.C Gaseous Effluents Bases

1. Gaseous Effluents, Dose

This Section is provided to ensure that the dose at the unrestricted area boundary from gaseous effluents from the units on site will be within the annual dose limits of 10CFR20 for unrestricted areas. These limits provide reasonable assurance that radioactive material discharged in gaseous effluents will not result in the exposure of an individual in an unrestricted area to annual average concentrations exceeding the limits specified in Appendix B, Table 2 of 10CFR20.1001-2402. The release rate limits restrict, at all times, the corresponding gamma and beta dose rates above background to an individual at or beyond the unrestricted area boundary to less than or equal to 500 mrem/year to the total body or to less than or equal to 3000 mrem/year to the skin. These release rate limits also restrict, at all times, the corresponding thyroid dose rate above background via the inhalation pathway to less than or equal to 1500 mrem/year. For purposes of calculation doses resulting from airborne releases, the main chimney is considered to be an elevated release point and the reactor building vent stack is considered to be a mixed mode release point.

2. Dose, Noble Gases

This Section is provided to implement the requirements of Sections II.B, III.A and IV.A of Appendix I, 10 CFR Part 50. The Operability Requirements implement the guides set forth in Section II.3 of Appendix I. The statements provide the required operating flexibility and at the same time implement the guides set forth in Section IV.A of Appendix I to assure that the releases of radioactive material in gaseous effluents will be kept "as low as is reasonably achievable." The surveillance requirements implement the requirements in Section III.A of Appendix I that conformance with the guides of Appendix I is to be shown by calculational procedures based on models and data such that the actual exposure of an individual through the appropriate pathways is unlikely to be substantially underestimated. The dose calculations established in the ODCM for calculating the doses due to the actual release rates of radioactive noble gases in gaseous effluents will be consistent with the methodology provided in Regulatory Guide 1.109, "Calculation of Annual Doses to Man from Routine Releases of Reactor Effluents for the Purpose of Evaluating Compliance with 10 CFR Part 50, Appendix I," Revision 1, October 1977 and Regulatory Guide 1.111, "Methods for Estimating Atmospheric Transport and Dispersion of Gaseous Effluents in Routine Releases from Light-Water Cooled Reactors," Revision 1, July 1977. NUREG-0133 provides methods for dose calculations consistent with Regulatory Guides 1.109 and 1.111.

12.4.C Gaseous Effluents Bases (Cont'd)

3. Dose, Radioiodines, Radioactive Material in Particulate Form and Radionuclides Other than Noble Gases

This Section is provided to implement the requirements of Sections II.C, III.A and IV.A of Appendix I, 10 CFR Part 50. The Operability Requirements are the guides set forth in Section II.C of Appendix I. The statements provide the required operating flexibility and at the same time implement the guides set forth in Section IV.A of Appendix I to assure that the releases of radioactive materials in gaseous effluents will be kept "as low as reasonably achievable." The ODCM calculational methods specified in the surveillance requirements implement the requirements in Section III.A of Appendix I that conformance with the guides of Appendix I be shown by calculational procedures based on models and data such that the actual exposure of an individual through appropriate pathways is unlikely to be substantially underestimated. The ODCM calculational methods approved by NRC for calculating the doses due to the actual release rates of the subject materials are required to be consistent with the methodology provided in Regulatory Guide 1.109. "Calculation of Annual Doses to Man from Routine Releases of Reactor Effluents for the Purpose of Evaluating Compliance with 10 CFR Part 50, Appendix I", Revision 1, October 1977 and Regulatory Guide 1.111, "Methods for Estimating Atmospheric Transport and Dispersion of Gaseous Effluents in Routine Releases from Light-Water-Cooled Reactors," Revision 1, July 1977. These equations also provide for determining the actual doses based upon the historical average atmospheric conditions. The release rate limits for radioiodines, radioactive material in particulate form and radionuclides other than noble gases are dependent on the existing radionuclide pathways to man, in the unrestricted area. The pathways which were examined in the development of these limits were: 1) individual inhalation of airborne radionuclides, 2) deposition of radionuclides onto green leafy vegetation with subsequent consumption by man and 3) deposition onto grassy areas where milk animals graze with consumption of the milk by man.

4. Gaseous Waste Treatment

The operability of the gaseous waste treatment which reduces amounts or concentrations of radioactive materials ensures that the system will be available for use whenever gaseous effluents require treatment prior to release to the environment. The requirement that the appropriate portions of this system be operable when specified provides reasonable assurance that the releases of radioactive materials in gaseous effluents will be kept "as low as reasonably achievable". This specification implements the requirements of 10 CFR Part 50.36a, General Design Criterion 60 of Appendix A to 10 CFR Part 50, and design objective Section II.D of Appendix I to 10 CFR Part 50.

12.5 RADIOLOGICAL ENVIRONMENTAL MONITORING PROGRAM

12.5.1 Monitoring Program

Operability Requirements

12.5.1.A The Radiological Environmental Monitoring Program shall be conducted as specified in Table 12.5-1.

Applicability: At all times.

Action:

1. With the Radiological Environmental Monitoring Program not being conducted as specified in Table 12.5-1, prepare and submit to the Commission, in the Annual Radiological Environmental Operating Report required by Section 12.6.1, a description of the reasons for not conducting the program as required and the plans for preventing a recurrence.

   Deviations are permitted from the required sampling schedule if specimens are unobtainable due to hazardous conditions, seasonal availability, malfunction of sampling equipment, if a person/business who participates in the program goes out of business or no longer can provide sample, or contractor omission which is corrected as soon as discovered. If the equipment malfunctions, corrective actions shall be completed as soon as practical. If a person/business supplying samples goes out of business, a replacement supplier shall be found as soon as possible. All deviations from the sampling schedule will be described in the Annual Radiological Environmental Operating Report.

2. With the level of radioactivity as the result of plant effluents in an environmental sampling medium at a specified location exceeding the reporting levels of Table 12.5-2 when averaged over any calendar quarter, prepare and submit a report to the Regional Administrator of the NRC Regional Office within 30 days, that identifies the cause(s) for exceeding the limit(s) and defines the corrective actions to be taken to reduce radioactive effluents so that the potential annual dose* to a MEMBER OF THE PUBLIC is less than the calendar year limits of Section 12.3.A.2, 12.4.A.2, or 12.4.A.3. When more than one of the radionuclides in Table 12.5-2 are detected in the sampling medium, this report shall be submitted if:

$$\frac{\text{concentration (1)}}{\text{reporting level (1)}} + \frac{\text{concentration (2)}}{\text{reporting level (2)}} + \ldots \geq 1.0$$

   When radionuclides other than those in Table 12.5-2 are detected and are the result of plant effluents, this report shall be submitted if the potential annual dose* to A MEMBER OF THE PUBLIC from all radionuclides is equal to or greater than the calendar year limits of Section 12.3.A.2, 12.4.A.2, or 12.4.A.3. This report is not required if the measured level of radioactivity was not the result of plant effluents; however, in such an event, the condition shall be reported and described in the Annual Radiological Environmental Operating Report required by Section 12.6.1.

*The methodology and parameters used to estimate the potential annual dose to a MEMBER OF THE PUBLIC shall be indicated in this report.

12.5 RADIOLOGICAL ENVIRONMENTAL MONITORING PROGRAM (Continued)

12.5.1.A.3. If the sample type or sampling location(s) as required by Table 12.5-1 become(s) permanently unavailable , identify suitable alternative sampling media for the pathway of interest and/or specific locations for obtaining replacement samples and add them to the Radiological Environmental Monitoring Program as soon as practicable. The specific locations from which samples were unavailable may then be deleted from the monitoring program.

Prepare and submit controlled version of the ODCM within 180 days including a revised figure(s) and table reflecting the new location(s) with supporting information identifying the cause of the unavailability of samples and justifying the selection of new location(s) for obtaining samples.

Surveillance Requirements

12.5.1.B The radiological environmental monitoring program samples shall be collected pursuant to Table 12.5-1 from the specific locations given in the table and figure(s) in the ODCM, and shall be analyzed pursuant to the requirements of Table 12.5-1 and the detection capabilities required by Table 12.5-3.

Bases

12.5.1.C The Radiological Environmental Monitoring Program required by this section provides representative measurements of radiation and of radioactive materials in those exposure pathways and for those radionuclides that lead to the highest potential radiation exposures of MEMBERS OF THE PUBLIC resulting from the station operation. This monitoring program implements Section IV.B.2 of Appendix I to 10 CFR Part 50 and thereby supplements the radiological effluent monitoring program by verifying that the measurable concentrations of radioactive materials and levels of radiation are not higher than expected on the basis of the effluent measurements and the modeling of the environmental exposure pathways. Guidance for this monitoring program is provided by the Radiological Assessment Branch Technical Position on Environmental Monitoring. The initially specified monitoring program will be effective for at least the first 3 years of commercial operation. Following this period, program changes may be initiated based on operational experience.

The required detection capabilities for environmental sample analyses are tabulated in terms of the lower limits of detection (LLDs). The LLDs required by Table 12.5-3 are considered optimum for routine environmental measurements in industrial laboratories. It should be recognized that the LLD is defined as a before the fact limit representing the capability of a measurement system and not as an after the fact limit for a particular measurement.

Detailed discussion of the LLD, and other detection limits, can be found in HASL Procedures Manual, HASL-300 (revised annually), Currie, LA., "Limits for Qualitative Detection and Quantitative Determination - Application to Radiochemistry," Anal. Chem. 40, 586-93 (1968), and Hartwell, J.K., "Detection Limits for Radioanalytical Counting Techniques," Atlantic Richfield Hanford Company Report ARH-SA-215 (June 1975).

12.5 RADIOLOGICAL ENVIRONMENTAL MONITORING PROGRAM (Continued)

Interpretations

12.5.1.D Table 12.5-1 requires "one sample of each community drinking water supply downstream of the plant within 10 kilometers." Drinking water supply is defined as water taken from rivers, lakes, or reservoirs (not well water) which is used for drinking.

TABLE 12.5-1

RADIOLOGICAL ENVIRONMENTAL MONITORING PROGRAM

EXPOSURE PATHWAY AND/ OR SAMPLE	NUMBER OF REPRESENTATIVE SAMPLES AND SAMPLE LOCATIONS[1]	SAMPLING AND COLLECTION FREQUENCY	TYPE AND FREQUENCY OF ANALYSIS
1. Airborne Radioiodine and Particulates	Samples from a total of eight locations: a. Indicator- Near Field Four samples from locations within 4 km (2.5 mi) in different sectors. b. Indicator- Far Field Four additional locations within 4 to 10 km (2.5 to 6.2 mi) in different sectors. c. Control One sample from a control location within 10 to 30 km (6.2 to 18.6 mi).	Continuous particulate sampler operation with sample collection weekly, or more frequently if required due to dust loading, and radioiodine canister collection biweekly.	Radioiodine Canister: I-131 analysis biweekly on near field samples and control.[2] Particulate Sampler: Gross beta analysis following weekly filter change[3] and gamma isotopic analysis[4] quarterly on composite filters by location on near field samples and control.[2]

TABLE 12.5-1 (Continued)

RADIOLOGICAL ENVIRONMENTAL MONITORING PROGRAM

EXPOSURE PATHWAY AND/ OR SAMPLE	NUMBER OF REPRESENTATIVE SAMPLES AND SAMPLE LOCATIONS[1]	SAMPLING AND COLLECTION FREQUENCY	TYPE AND FREQUENCY OF ANALYSIS
2. Direct Radiation[5]	Forty routine monitoring stations either with a thermoluminescent dosimeter (TLD) or with one instrument for measuring dose rate continuously, placed as follows: a. Indicator- Inner Ring (100 Series TLD) One in each meteorological sector, in the general area of the SITE BOUNDARY (0.1 to 2 miles); b. Indicator- Outer Ring (200 Series TLD) One in each meteorological sector, within 3.2 to 10 km (2 to 6.2 mi); and c. Other One at each Airborne location given in part 1.a. and 1.b. The balance of the TLDs to be placed at special interest locations beyond the Restricted Area where either a MEMBER OF THE PUBLIC or Commonwealth Edison employees have routine access. (300 Series TLD)	Quarterly	Gamma dose on each TLD quarterly.

TABLE 12.5-1 (Continued)

RADIOLOGICAL ENVIRONMENTAL MONITORING PROGRAM

EXPOSURE PATHWAY AND/ OR SAMPLE	NUMBER OF REPRESENTATIVE SAMPLES AND SAMPLE LOCATIONS[1]	SAMPLING AND COLLECTION FREQUENCY	TYPE AND FREQUENCY OF ANALYSIS
2. Direct Radiation[5] (Cont'd)	d. Control One at each Airborne control location given in part 1.c	Quarterly	Gamma dose on each TLD quarterly.
3. Waterborne a. Ground/ Well	a. Indicator Samples from three sources only if likely to be affected.[6]	Quarterly	Gamma isotopic[4] and tritium analysis quarterly.
b. Drinking[7]	a. Indicator One Sample from each community drinking water supply that could be affected by the station discharge within 10 km (6.2 mi) downstream of discharge.	Weekly grab samples.	Gross beta and gamma isotopic analyses[4] including I-131 on monthly composite; tritium analysis on quarterly composite.
c. Surface Water[7]	If no community water supply (Drinking Water) exists within 10 km downstream of discharge then surface water sampling shall be performed. a. Indicator One sample downstream	Weekly grab samples.	Gross beta and gamma isotopic analyses[4] including I-131on monthly composite; tritium analysis on quarterly composite.
d. Control Sample[7]	a. Control One surface sample upstream of discharge.	Weekly grab samples.	Gross beta and gamma isotopic analyses[4] including I-131on monthly composite; tritium analysis on quarterly composite.

TABLE 12.5-1 (Continued)

RADIOLOGICAL ENVIRONMENTAL MONITORING PROGRAM

EXPOSURE PATHWAY AND/ OR SAMPLE	NUMBER OF REPRESENTATIVE SAMPLES AND SAMPLE LOCATIONS[1]	SAMPLING AND COLLECTION FREQUENCY	TYPE AND FREQUENCY OF ANALYSIS
e. Sediment	a. Indicator At least one sample from downstream[7] area within 10 km (6.2 mi).	Semiannually.	Gamma isotopic analysis[4] semiannually.
f. Dredging Spoils	a. Indicator At least one sample of sediment from dredging within 1 mile downstream of station discharge point.	Annually when dredging occurs within past year.	Gamma isotopic[4] analysis annually.
4. Ingestion a. Milk [8]	a. Indicator Samples from milking animals from a maximum of three locations within 10 km (6.2 mi) distance. b. Control One sample from milking animals at a control location within 10 to 30 km (6.2 to 18.6 mi).	Biweekly [9] when animals are on pasture (May through October), monthly at other times (November through April).	Gamma isotopic[4] and I-131[10] analysis on each sample.
b. Fish	a. Indicator Representative samples of commercially and recreationally important species in discharge area. b. Control Representative samples of commercially and recreationally important species in control locations upstream of discharge.	Two times annually.	Gamma isotopic analysis[4] on edible portions

TABLE 12.5-1 (Continued)

RADIOLOGICAL ENVIRONMENTAL MONITORING PROGRAM

EXPOSURE PATHWAY AND/ OR SAMPLE	NUMBER OF REPRESENTATIVE SAMPLES AND SAMPLE LOCATIONS[1]	SAMPLING AND COLLECTION FREQUENCY	TYPE AND FREQUENCY OF ANALYSIS
c. Food Products	a. Indicator Two representative samples from the principal food pathways grown in each of four major quadrants within 10 km (6.2 mi): At least one root vegetable sample[11] At least one broad leaf vegetable (or vegetation)[11] b. Control Two representative samples similar to indicator samples grown within 15 to 30 km (9.3 to 18.6 mi).	Annually	Gamma isotopic[4] analysis including I-131 on each sample.

TABLE 12.5-1 (Continued)
RADIOLOGICAL ENVIRONMENTAL MONITORING PROGRAM
TABLE NOTATIONS

(1) Specific parameters of distance and direction from the centerline of the midpoint of the two units and additional description where pertinent, shall be provided for each and every sample location in Table 1.1-1 of the ODCM Station Annexes. Refer to NUREG-0133, "Preparation of Radiological Effluent Technical Specifications for Nuclear Power Plants," October 1978, and to Radiological Assessment Branch Technical Position, Revision 1, November 1979.

(2) Far field samples are analyzed when the respective near field sample results are inconsistent with previous measurements and radioactivity is confirmed as having its origin in airborne effluents from the station, or at the discretion of the Radiation Protection Director.

(3) Airborne particulate sample filters shall be analyzed for gross beta radioactivity 24 hours or more after sampling to allow for radon and thoron daughter decay. If gross beta activity in air particulate samples is greater than 10 times the yearly mean of control samples, gamma isotopic analysis shall be performed on the individual samples.

(4) Gamma isotopic analysis means the identification and quantification of gamma emitting radionuclides that may be attributable to the effluents from the station.

(5) One or more instruments, such as a pressurized ion chamber, for measuring and recording dose rate continuously may be used in place of, or in addition to, integrating dosimeters. Film badges shall not be used as dosimeters for measuring direct radiation. The 40 locations is not an absolute number. The number of direct radiation monitoring stations may be reduced according to geographical limitations; e.g., If a station is adjacent to a lake, some sectors may be over water thereby reducing the number of dosimeters which could be placed at the indicated distances. The frequency of analysis or readout for TLD systems will depend upon the characteristics of the specific system used and should be selected to obtain optimum dose information with minimal fading.

(6) Groundwater samples shall be taken when this source is tapped for drinking or irrigation purposes in areas where the hydraulic gradient or recharge properties are suitable for contamination.

(7) The "downstream" sample shall be taken in an area beyond but near the mixing zone. The "upstream sample" shall be taken at a distance beyond significant influence of the discharge. Upstream samples in an estuary must be taken far enough upstream to be beyond the station influence.

(8) If milking animals are not found in the designated indicator locations, or if the owners decline to participate in the REMP, all milk sampling may be discontinued.

(9) Biweekly refers to every two weeks.

(10) I-131 analysis means the analytical separation and counting procedure are specific for this radionuclide.

(11) One sample shall consist of a volume/weight of sample large enough to fill contractor specified container.

TABLE 12.5-2

REPORTING LEVELS FOR RADIOACTIVITY CONCENTRATIONS IN ENVIRONMENTAL SAMPLES
REPORTING LEVELS

ANALYSIS	WATER (pCi/l)	AIRBORNE PARTICULATE OR GASES (pCi/m^3)	FISH (pCi/kg, wet)	MILK (pCi/l)	FOOD PRODUCTS (pCi/kg, wet)
H-3	20,000(1)				
Mn-54	1,000		30,000		
Fe-59	400		10,000		
Co-58	1,000		30,000		
Co-60	300		10,000		
Zn-65	300		20,000		
Zr-Nb-95	400				
I-131	2(2)	0.9		3	100
Cs-134	30	10	1,000	60	1,000
Cs-137	50	20	2,000	70	2,000
Ba-La-140	200			300	

(1) For drinking water samples. This is 40 CFR Part 141 value. If no drinking water pathway exists, a value of 30,000 pCi/l may be used.

(2) If no drinking water pathway exists, a value of 20 pCi/l may be used.

TABLE 12.5-3

DETECTION CAPABILITIES FOR ENVIRONMENTAL SAMPLE ANALYSIS[1]

LOWER LIMIT OF DETECTION (LLD)[2][3]

ANALYSIS	WATER (pCi/l)	AIRBORNE PARTICULATE OR GASES (pCi/m^3)	FISH (pCi/kg, wet)	MILK (pCi/l)	FOOD PRODUCTS (pCi/kg, wet)	SEDIMENT (pCi/kg, dry)
Gross Beta	4	0.01				
H-3	2,000					
Mn-54	15		130			
Fe-59	30		260			
Co-58,60	15		130			
Zn-65	30		260			
Zr-95	30					
Nb-95	15					
I-131	1/15[4]	0.07		1	60	
Cs-134	15	0.05	130	15	60	150
Cs-137	18	0.06	150	18	80	180
Ba-140	60			60		
La-140	15			15		

TABLE 12.5-3 (Continued)
DETECTION CAPABILITIES FOR ENVIRONMENTAL SAMPLE ANALYSIS
TABLE NOTATIONS

(1) The nuclides on this list are not the only nuclides intended to be considered. Other peaks that are identifiable, together with those of the above nuclides, shall also be analyzed and reported in the Annual Radiological Environmental Operating Report.

(2) Required detection capabilities for thermoluminescent dosimeters used for environmental measurements shall be in accordance with the recommendations of Regulatory Guide 4.13.

(3) The Lower Limit of Detection (LLD) is defined, for purposes of these specifications, as the smallest concentration of radioactive material in a sample that will yield a net count, above system background, that will be detected with 95% probability with only 5% probability of falsely concluding that a blank observation represents a "real" signal.

For a particular measurement system, which may include radiochemical separation, the LLD is defined as follows:

$$LLD = \frac{4.66\ S_b + 3/t_b}{(E)\ (V)\ (2.22)\ (Y)\ (\exp(-\lambda\Delta t))}$$

$$LLD \sim \frac{4.66\ S_b}{(E)\ (V)\ (2.22)\ (Y)\ (\exp(-\lambda\Delta t))}$$

Where: $4.66\ S_b >> 3/t_b$

LLD = the "a priori" Minimum Detectable Concentration (picoCuries per unit mass or volume),

s_b = the standard deviation of the background counting rate or of the counting rate of a blank sample, as appropriate (counts per minute),

$$= \frac{\sqrt{Total\ Counts}}{t_b}$$

E = the counting efficiency(counts per disintegration),

V = the sample size (units of mass or volume),

2.22 = the number of disintegrations per minute per picoCurie,

Y = the fractional radiochemical yield, when applicable,

λ = the radioactive decay constant for the particular radionuclide (sec^{-1}),

TABLE 12.5-3 (Continued)
DETECTION CAPABILITIES FOR ENVIRONMENTAL SAMPLE ANALYSIS
TABLE NOTATIONS

t_b = counting time of the background or blank (minutes), and

Δt = the elapsed time between sample collection, or end of the sample collection period, and the time of counting (sec).

Typical values of E, V, Y, and Δt should be used in the calculation.

It should be recognized that the LLD is defined as a before the fact limit representing the capability of a measurement system and not as an after the fact limit for a particular measurement.

Analyses shall be performed in such a manner that the stated LLDs will be achieved under routine conditions. Occasionally, background fluctuations, unavoidable small sample sizes, the presence of interfering nuclides, or other uncontrollable circumstances may render these LLDs unachievable. In such cases, the contributing factors shall be identified and described in the Annual Radiological Environmental Operating Report.

Alternate LLD Methodology

An alternate methodology for LLD determination follows and is similar to the above LLD equation:

$$LLD = \frac{(2.71 + 4.65\sqrt{B}) \bullet \text{Decay}}{E\ q\ b\ Y\ t\ (2.22E06)}$$

Where:

B = background sum (counts)

E = counting efficiency, (counts detected/disintegrations)

q = sample quantity, (mass or volume)

b = abundance, (if applicable)

Y = fractional radiochemical yield or collection efficiency, (if applicable)

t = count time (minutes)

2.22E06 = number of disintegrations per minute per microCurie

$(2.71 + 4.65\sqrt{B}) = k^2 + (2k \sqrt{2} \sqrt{B})$, and k = 1.645.

(k=value of the t statistic from the single-tailed t distribution at a significance level of 0.95% and infinite degrees of freedom. This means that the LLD result represents a 95% detection probability with a 5% probability of falsely concluding that the nuclide present when it is not or that the nuclide is not present when it is.)

Decay = $e^{\lambda \Delta t} [\lambda RT/(1-e^{-\lambda RT})] [\lambda T_d/(1-e^{-\lambda Td})]$, (if applicable)

TABLE 12.5-3
DETECTION CAPABILITIES FOR ENVIRONMENTAL SAMPLE ANALYSIS
TABLE NOTATIONS

λ = radioactive decay constant, (units consistent with Δt, RT and T_d)

Δt = "delta t", or the elapsed time between sample collection or the midpoint of sample collection and the time the count is started, depending on the type of sample, (units consistent with λ)

RT = elapsed real time, or the duration of the sample count, (units consistent with λ)

T_d = sample deposition time, or the duration of analyte collection onto the sample media, (unit consistent with λ)

The LLD may be determined using installed radioanalytical software, if available. In addition to determining the correct number of channels over which to total the background sum, utilizing the software's ability to perform decay corrections (i.e. during sample collection, from sample collection to start of analysis and during counting), this alternate method will result in a more accurate determination of the LLD.

It should be recognized that the LLD is defined as a before the fact limit and not as an after the fact limit for a particular measurement.

If no drinking water pathway exists, then the value of 15 pCi/l may be used.

12.5.2 Land Use Census

Operability Requirements

12.5.2.A. A Land Use Census shall be conducted and shall identify within a distance of 10 km (6.2 miles) the location in each of the 16 meteorological sectors* of the nearest milk animal, the nearest residence**, and an enumeration of livestock. For dose calculation, a garden will be assumed at the nearest residence.

Applicability: At all times.

Action:

1. With a Land Use Census identifying a location(s) that yields a calculated dose or dose commitment, via the same exposure pathway 20% greater than at a location from which samples are currently being obtained in accordance with Section 12.5.1, add the new location(s) within 30 days to the Radiological Environmental Monitoring Program given in Chapter 11. The sampling location(s), excluding the control location, having the lowest calculated dose or dose commitment(s), via the same exposure pathway, may be deleted from this monitoring program after October 31 of the year in which this Land Use Census was conducted. Submit in the next Annual Radiological Environmental Operating Report documentation for a change in the ODCM including a revised figure(s) and table(s) for the ODCM reflecting the new location(s) with information supporting the change in sampling locations.

   *This requirement may be reduced according to geographical limitations; e.g. at a lake site where some sector's will be over water.

   **The nearest industrial facility shall also be documented if closer than the nearest residence.

Surveillance Requirements

12.5.2.B The Land Use Census shall be conducted during the growing season, between June 1 and October 1, at least once per 12 months using that information that will provide the best results, such as by a door-to-door survey, aerial survey, or by consulting local agriculture authorities. The results of the Land Use Census shall be included in the Annual Radiological Environmental Operating Report.

Bases

12.5.2.C This specification is provided to ensure that changes in the use of areas at and beyond the SITE BOUNDARY are identified and that modifications to the Radiological Environmental Monitoring Program given in the ODCM are made if required by the results of this census.

This census satisfies the requirements of Section IV.B.3 of Appendix I to 10 CFR Part 50. An annual garden census will not be required since the licensee will assume that there is a garden at the nearest residence in each sector for dose calculations.

12.5.3 Interlaboratory Comparison Program

Operability Requirements

12.5.3.A Analyses shall be performed on radioactive materials supplied as part of an Interlaboratory Comparison Program that is traceable to NIST.

Applicability: At all times.

Action:

1. With analyses not being performed as required above, report the corrective actions taken to prevent a recurrence to the Commission in the Annual Radiological Environmental Operating Report.

Surveillance Requirements

12.5.3.B A summary of the results obtained as part of the above required Interlaboratory Comparison Program shall be included in the Annual Radiological Environmental Operating Report.

Bases

12.5.3.C The requirement for participation in an Interlaboratory Comparison Program is provided to ensure that independent checks on the precision and accuracy of the measurements of radioactive material in environmental samples matrices are performed as part of the quality assurance program for environmental monitoring in order to demonstrate that the results are valid for the purposes of Section IV.B.2 of Appendix I to 10 CFR Part 50.

12.6 RECORDKEEPING AND REPORTING

12.6.1. Station Operating Records

1. Records and/or logs relative to the following items shall be kept in a manner convenient for review and shall be retained for at least five years.

    1. Records and periodic checks, inspection and/or calibrations performed to verify the surveillance requirements (See the applicable surveillance in the Instrumentation, Liquid Effluents, Gaseous Effluents, and Radiological Environmental Monitoring Sections) are being met. All equipment failing to meet surveillance requirements and the corrective action taken shall be recorded.

    2. Records of radioactive shipments.

2. Records and/or logs relative to the following items shall be recorded in a manner convenient for review and shall be retained for the life of the plant.

    1. Records of off-site environmental monitoring surveys.

    2. Records of radioactivity in liquid and gaseous wastes released to the environment.

    3. Records of reviews performed for changes made to the ODCM.

12.6.2. Reports

1. Radioactive Effluent Release Report*

    For Unit 1, the Radioactive Effluent Release Report covering the decommissioning activities of the unit during the previous calendar year shall be submitted prior to April 1 of each year in accordance with 10 CFR 50.36a. The report shall include a summary of the quantities of radioactive liquid and gaseous effluents and solid waste released from the unit. The material provided shall be consistent with the objectives outlined in the ODCM and the Process Control Program (PCP) and in conformance with 10 CFR 50.36a and 10 CFR 50, Appendix I, Section IV.B.1.

    For Units 2 and 3, the Radioactive Effluent Release Report covering the operation of the unit during the previous calendar year shall be submitted prior to May 1 of each year in accordance with 10CFR 50.36a. The report shall include a summary of the quantities of radioactive liquid and gaseous effluents and solid waste released from the unit. The material provided shall be consistent with the objectives outlined in the ODCM and PCP and in conformance with 10 CFR Part 50.36a and 10 CFR 50, Appendix I, Section IV.B.1.

* A single submittal may be made for a multiple unit station. The submittal should combine sections common to all units at the station; however, for units with separate radwaste systems, the submittal shall specify the releases of radioactive material from each unit.

12.6.2 Reports - (Cont'd)

2. Annual Radiological Environmental Operating Report**

For Unit 1, the Annual Radiological Environmental Operating Report covering the decommissioning activities of the unit during the previous calendar year shall be submitted prior to May 1 of each year. The report shall include summaries, interpretations, and analysis of trends of the results of the Radiological Environmental Monitoring Program for the reporting period. The material provided shall be consistent with the objectives outlined in the ODCM, and 10 CFR 50, Appendix I, Sections IV.B.2, IV.B.3, and IV.C.

For Units 2 and 3, the Annual Radiological Environmental Operating Report covering the operation of the unit during the previous calendar year shall be submitted prior to May 15 of each year. The report shall include summaries, interpretations, and analysis of trends of the results of the Radiological Environmental Monitoring Program for the reporting period. The material provided shall be consistent with the objectives outlined in the ODCM, and 10 CFR 50, Appendix I, and Sections IV.B.2., IV.B.3, and IV.C. A detailed listing of the requirement of the report is given below:

(a) Results of environmental sampling summarized on a quarterly basis following the format of Regulatory Guide 4.8 Table 1 (December 1975); (individual sample results will be retained at the station);

In the event that some results are not available for inclusion with the report, the report shall be submitted noting and explaining the reasons for the missing results. Summaries, interpretations, and analysis of trends of the results are to be provided.

(b) An assessment of the monitoring results and radiation dose via the principal pathways of exposure resulting from plant emissions of radioactivity including the maximum noble gas gamma and beta air doses in the unrestricted area. The assessment of radiation doses shall be performed in accordance with the ODCM.

(c) Results of the census to determine the locations of animals producing milk for human consumption, and the pasture season feeding practices at dairies in the monitoring program.

(d) The reason for the omission if the nearest dairy to the station is not in the monitoring program.

** A single submittal may be made for a multiple unit station.
The submittal should combine sections common to all units at the station.

12.6.2 Reports - (Cont'd)

(e) An annual summary of meteorological conditions concurrent with the releases of gaseous effluents in the form of joint frequency distributions of wind speed, wind direction, and atmospheric stability.

(f) The results of the interlaboratory comparison program described in Section 12.5.3.

(g) The results of the 40 CFR Part 190 uranium fuel cycle dose analysis for each calendar year.

(h) A summary of the monitoring program, including maps showing sampling locations and tables giving distance and direction of sampling locations from the station.

3. Non-Routine Environmental Report

(a) If a confirmed measured radionuclide concentration in an environmental sampling medium averaged over any calendar quarter sampling period exceeds the reporting level given in Table 12.5-2 and if the radioactivity is attributable to plant operation, a written report shall be submitted to the Regional Administrator of NRC Regional Office, with a copy to the Director, Office of Nuclear Reactor Regulation, within 30 days from the end of the quarter. When more than one of the radionuclides in Table 12.5-2 are detected in the medium, the reporting level shall have been exceeded if $\Sigma C_i/(RL)_i$ is equal to or greater than 1 where C is the concentration of the ith radionuclide in the medium and RL is the reporting level of radionuclide i.

(b) If radionuclides other than those in Table 12.5-2 are detected and are due to plant effluents, a reporting level is exceeded if the potential annual dose to an individual is equal to or greater than the design objective doses of 10 CFR Part 50, Appendix I.

(c) This report shall include an evaluation of any release conditions, environmental factors, or other aspects necessary to explain the anomalous affect.

12.6.3. Offsite Dose Calculation Manual (ODCM)

1. The ODCM shall contain the methodology and parameters used in the calculation of offsite doses due to radioactive gaseous and liquid effluents, in the calculation of gaseous and liquid effluent monitoring alarm and trip setpoints, and in the conduct of the Radiological Environmental Monitoring Program.

2. The ODCM shall also contain the radioactive effluent controls and radiological environmental monitoring activities (described in Section 12.2 - 12.5) and descriptions of the information that should be included in the Annual Radioactive Effluent Release and Radiological Environmental Operating Reports required by Sections 12.6.2.1 and 12.6.2.2.

12.6.3 Offsite Dose Calculation Manual (ODCM)-(Cont'd)

3. Licensee initiated changes to the ODCM:

(1) Shall be documented and records of reviews performed shall be retained. This documentation shall contain:

(a) Sufficient information to support the change together with appropriate analyses or evaluations justifying the change(s); and

(b) A determination that the change will maintain the level of radioactive effluent control required by 10 CFR Part 20.1302, 40 CFR Part 190, 10 CFR Part 50.36a, and 10 CFR 50, Appendix I, and do not adversely impact the accuracy or reliability of effluent, dose, or set point calculations.

(2) Shall become effective after approval of the Unit 2/3 Station Manager.

(3) Shall be submitted to the NRC in the form of a complete, legible copy of the entire ODCM as a part of or concurrent with the Radioactive Effluent Release Report for the period of the report in which any change to the ODCM was made. Each change shall be identified by markings in the margin of the affected pages, clearly indicating the area of the page that was changed, and shall indicate the date (i.e. month and date) the change was implemented.

12.6.4. Major Changes to Radioactive Waste Treatment Systems (Liquid and Gaseous)

NOTE: This information may be submitted as part of the annual FSAR update.

1. Licensee initiated major changes to the radioactive waste systems may be made provided:

The change is reported in the Monthly Operating Report for the period in which the evaluation was reviewed by Independent Technical Review. The discussion of each change shall contain:

(1) A summary of the evaluation that led to the determination that the change could be made in accordance with 10 CFR Part 50.59;

(2) Sufficient detailed information to support the reason for the change;

(3) A detailed description of the equipment, components, and process involved and the interfaces with other plant systems;

(4) An evaluation of the change which shows the predicted releases of radioactive materials in liquid and gaseous effluents that differ from those previously predicted in the license application and amendments;

(5) A comparison of the predicted releases of radioactive materials in liquid and gaseous effluents to the actual releases for the period in which the changes were made;

12.6.4. Major Changes to Radioactive Waste Treatment Systems (Liquid and Gaseous) (Cont'd)

(6) An estimate of the exposure to plant operating personnel as a result of the change; and

(7) Documentation of the fact that the change was reviewed and found acceptable by Independent Technical Review.

2. The change shall become effective upon review and acceptance by Independent Technical Review.

DRESDEN ANNEX INDEX

PAGE	REVISION
APPENDIX F	
F-i	2
F-ii	2
F-iii	2
F-iv	2
F-1	2
F-2	2
F-3	2
F-4	2
F-5	2
F-6	2
F-7	2
F-8	2
F-9	2
F-10	2
F-11	2
F-12	2
F-13	2
F-14	2
F-15	2
F-16	2
F-17	2
F-18	2
F-19	2
F-20	2
F-21	2
F-22	2
F-23	2
F-24	2
F-25	2
F-26	2
F-27	2
F-28	2
F-29	2
F-30	2
F-31	2
F-32	2
F-33	2
F-34	2
F-35	2
F-36	2
F-37	2
F-38	2
F-39	2
F-40	2
F-41	2
F-42	2
F-43	2
F-44	2
F-45	2
F-46	2
F-47	2
F-48	2
F-49	2

APPENDIX F

STATION-SPECIFIC DATA FOR DRESDEN UNITS 1, 2, AND 3

TABLE OF CONTENTS

	PAGE
F.1 INTRODUCTION	F-1
F.2 REFERENCES	F-1
DRESDEN 1	
DRESDEN 1, 2, 3	

APPENDIX F
LIST OF TABLES

NUMBER	TITLE	PAGE
F-1	Aquatic Environmental Dose Parameters	F-2
F-2	Station Characteristics	F-3
F-3	Critical Ranges	F-4
F-4	Average Wind Speeds	F-5
F-5	X/Q and D/Q Maxima At or Beyond the Unrestricted Area Boundary	F-6
F-5a	X/Q and D/Q Maxima At or Beyond the Restricted Area Boundary	F-7
F-6	D/Q at the Nearest Milk Cow and Meat Animal Locations Within 5 Miles	F-8
F-7	Maximum Offsite Finite Plume Gamma Dose Factors Based on 1 cm Depth at the Unrestricted Area Boundary for Selected Nuclides	F-9
F-7a	Maximum Offsite Finite Plume Gamma Dose Factors Based on 1 cm Depth at the Restricted Area Boundary for Selected Nuclides	F-24
F-8	Parameters for Calculation of N-16 Skyshine Radiation from Dresden 2/3	F-39
Supplemental Tables		
A	Elevated Level Joint Frequency Distribution Table Summary - 300 Foot Elevation Data	F-40
	-Summary Table of Percent by Direction and Class -Summary Table of Percent by Direction and Speed -Summary Table of Percent by Speed and Class	
B	Mixed Mode Joint Frequency Distribution Table Summaries - 150 and 35 Foot Elevation Data	F-42
	-Summary Table of Percent by Direction and Class -Summary Table of Percent by Direction and Speed -Summary Table of Percent by Speed and Class	
C	Ground Level Joint Frequency Distribution Table Summary - 35 Foot Elevation Data	F-46
	-Summary Table of Percent by Direction and Class -Summary Table of Percent by Direction and Speed -Summary Table of Percent by Speed and Class	

APPENDIX F
LIST OF FIGURES

NUMBER	TITLE	PAGE
F-1	Unrestricted Area Boundary	F-48
F-2	Restricted Area Boundary	F-49

APPENDIX F

STATION-SPECIFIC DATA FOR DRESDEN UNITS 1, 2, AND 3

F.1 INTRODUCTION

This appendix contains data relevant to the Dresden site. Included are a diagram of the unrestricted and restricted area boundary and tables of values of parameters used in offsite dose assessment.

F.2 REFERENCES FOR DRESDEN 1

1. "Determination of Radial Distances from Exhaust Stack to Closest Offsite Location," Sargent and Lundy, Analysis and Technology Division, Dresden Calculation ATD-0033, Revision 0, December 26, 1991.

2. "CECo ODCM Appendix F Tables for Dresden 1," Sargent & Lundy, Analysis and Technology Division, Dresden Calculation ATD-0125, Revision 0, June 11, 1992.

REFERENCES FOR DRESDEN 2 and 3

1. Sargent & Lundy, Nuclear Safeguards and Licensing Division, Calculation, "Appendix I Technical Specification Tables," Revision 2, July 10, 1979.

2. "CECo ODCM Appendix F Tables for Dresden 2/3," Sargent & Lundy, Analysis and Technology Division, Dresden Calculation ATD-0145, Revision 0, 1 and 2.

3. "Verification of Environmental Parameters used for Commonwealth Edison Company's Offsite Dose Calculation," NUS Corporation, 1988.

4. "Verification of Environmental Parameters used for Commonwealth Edison Company's Offsite Dose Calculation," NUTECH, 1992.

5. "Radial Distance to Restricted Area Boundary," Sargent and Lundy, Analysis and Technology Division, Dresden Calculation ATD-0093, Revision 0, April 24, 1992.

Table F-1

Aquatic Environmental Dose Parameters for Dresden 1, 2, 3

General Information[a]

The station liquid discharge flows into the Illinois River. The nearest public potable water intake is at Peoria, 106 river miles downstream of the station.

There is no irrigation occurring on the Kankakee, Des Plaines, or Illinois Rivers downstream of the station.

Recreation includes one or more of the following: boating, waterskiing, swimming, and sport fishing.

Downstream dams on the Illinois River within 50 miles of the station are located as follows:

- At Dresden Island
- At Marseilles
- At Starved Rock

This is based on information in Figure 2.2.6-1 of the Dresden Updated Final Safety Analysis Report (update through Rev. 5, June 1987) and in Section 2.4.1.1 and Figure 2.4-2 of the LaSalle Environmental Report.

Water and Fish Ingestion Parameters

Parameter[b]	Value
$1/M^w$, $1/M^f$	1.0
F^w, cfs	1.85E4
F^f, cfs	1.04E4
t^f, hr[c]	24.0
t^w, hr[d]	106.0

Limits on Radioactivity in Unprotected Outdoor Tanks[e]

Refer to Section 3.8 of the Technical Specifications of Units 1, 2, and 3.

[a]This is based on information in the Dresden Station Safety Analysis Report (SAR), Section 2.5, Dresden Station Water Flow Schematic, and Braidwood and LaSalle Stations' collective data.

[b]The parameters are defined in Section A.2.1 of Appendix A.
[c]t^f (hr) = 24 hr (all stations) for the fish ingestion pathway
[d]t^w (hr) = 106 (distance to Peoria is 106 miles; flow rate of 1 mph assumed)
[e]See Section A.2.4 of Appendix A.

Table F-2

Station Characteristics for Dresden 1, 2, 3

STATION: Dresden Nuclear Power Station

LOCATION: Morris, Illinois

CHARACTERISTICS OF ELEVATED RELEASE POINT

1) Release Height = U1 91.44 m[a] / U2/3 94.49 m[a]

2) Diameter = U1 1.40 m / U2/3 3.35 m

3) Exit Speed = U1 17.9 ms^{-1}[a] / U2/3 16.6 ms^{-1}[a]

4) Heat Content = 70 KCal s^{-1}[a]

CHARACTERISTICS OF VENT STACK RELEASE POINT

1) Release Height = 48.77 m[a]

2) Diameter = 2.74 m

3) Exit Speed = 12.0 ms^{-1}[a]

CHARACTERISTICS OF GROUND LEVEL RELEASE

1) Release Height = 0 m

2) Building Factor (D) = 42.8 m[a]

METEOROLOGICAL DATA

A 400 ft Tower is Located 800 m WSW of elevated release point

---

Tower Data Used in Calculations

Release Point	Wind Speed and Direction	Differential Temperature
Elevated	300 ft	300-35 ft
Vent	150 ft	150-35 ft
Ground	35 ft	150-35 ft

[a]Used in calculating the meteorological and dose factors in Tables F-5, F-6, and F-7. See Sections B.3 through B.6 of Appendix B.

Table F-3

Critical Ranges

Direction	Unrestricted Area Boundary[a] (m)	Restricted Area Boundary (m)	Nearest Resident[b] (m)	Nearest Dairy Farm Within 5 Miles[c] (m)
N	768	466	3700	None
NNE	1207	698	1300	None
NE	1100	646	1300	None
ENE	1244	646	1300	None
E	1000	689	1800	None
ESE	988	661	1600	None
SE	1000	664	1000	None
SSE	792	744	800	None
S	841	814	800	None
SSW	853	789	5300	None
SW	1024	414	5800	None
WSW	1170	360	8000	None
W	1756	454	5600	None
WNW	1219	469	6000	None
NW	756	482	4200	None
NNW	671	466	1300	None

[a] Nearest land in unrestricted area. Used in calculating the meteorological dose factors in Tables F-5 and F-7. See Sections B.3 through B.6 of Appendix B.

[b] 2002 annual survey by Environmental, Inc. Midwest Laboratory. The distances are rounded to the nearest 100 meters.

[c] 2002 annual milch animal census, by Environmental, Inc. Midwest Laboratory. Used in calculating the D/Q values in Table F-6. The distances are rounded to the nearest 100 meters. A default value of 8000 meters is used when there are no dairies within 5 miles.

Table F-4

Average Wind Speeds for Dresden 1, 2, and 3

Downwind Direction	Average Wind Speed (m/sec)[a] Elevated	Mixed Mode[b]	Ground Level
N	7.3	5.5	4.3
NNE	7.4	5.3	4.1
NE	6.9	5.0	3.7
ENE	6.4	4.9	4.0
E	7.1	5.3	4.1
ESE	7.2	5.3	4.1
SE	6.4	5.1	3.7
SSE	6.4	4.8	3.4
S	5.9	4.4	3.1
SSW	5.9	4.5	3.0
SW	5.7	4.4	3.0
WSW	5.1	4.0	2.8
W	5.5	4.4	3.2
WNW	5.9	4.4	3.0
NW	5.7	4.4	3.4
NNW	6.3	4.9	3.8

[a] Based on Dresden site meteorological data, January 1978 through December 1987. Calculated in References 3 (unit 1) and 2 (units 2/3) of Section F.2 using formulas in Section B.1.3 of Appendix B.

[b] The mixed mode values apply only to Dresden 2/3. Mixed mode values are not needed for Dresden 1 since there is no mixed mode release point.

Table F-5

X/Q and D/Q Maxima at or Beyond the Unrestricted Area Boundary

Downwind Direction	Elevated(Stack) Release Radius (meters)	X/Q (sec/m**3)	Radius (meters)	D/Q (1/m**2)	Mixed Mode(Vent) Release Radius (meters)	X/Q (sec/m**3)	D/Q (1/m**2)	Ground Level Release Radius (meters)	X/Q (sec/m**3)	D/Q (1/m**2)
N	4400.	1.470E-08	768.	8.955E-10	768.	4.752E-07	6.331E-09	768.	3.363E-06	1.840E-08
NNE	4023.	1.502E-08	1207.	8.387E-10	1207.	2.440E-07	3.028E-09	1207.	1.565E-06	8.011E-09
NE	4400.	1.231E-08	1100.	7.495E-10	1100.	2.409E-07	2.716E-09	1100.	1.805E-06	7.715E-09
ENE	4023.	1.100E-08	1244.	6.629E-10	1244.	1.370E-07	1.982E-09	1244.	8.865E-07	4.617E-09
E	3600.	1.517E-08	1000.	1.036E-09	1000.	3.326E-07	4.215E-09	1000.	1.983E-06	1.114E-08
ESE	3600.	1.417E-08	988.	1.104E-09	988.	2.741E-07	3.956E-09	988.	1.914E-06	1.042E-08
SE	3600.	1.350E-08	1000.	1.111E-09	1000.	2.357E-07	3.527E-09	1000.	2.027E-06	9.865E-09
SSE	3219.	1.298E-08	792.	1.257E-09	792.	2.876E-07	4.369E-09	792.	2.725E-06	1.248E-08
S	4023.	9.552E-09	841.	8.039E-10	841.	1.891E-07	2.719E-09	841.	2.060E-06	8.371E-09
SSW	4023.	9.123E-09	853.	7.329E-10	853.	1.900E-07	2.436E-09	853.	1.923E-06	7.879E-09
SW	4400.	1.085E-08	1024.	6.659E-10	1024.	1.538E-07	1.887E-09	1024.	1.639E-06	6.659E-09
WSW	4400.	1.232E-08	1170.	6.123E-10	1170.	1.207E-07	1.339E-09	1170.	1.162E-06	4.615E-09
W	4828.	1.105E-08	1756.	4.566E-10	1756.	1.190E-07	1.028E-09	1756.	7.763E-07	3.122E-09
WNW	4828.	8.765E-09	1219.	4.387E-10	1219.	1.833E-07	1.685E-09	1219.	1.798E-06	6.402E-09
NW	4828.	9.337E-09	756.	5.904E-10	756.	2.478E-07	2.791E-09	756.	2.391E-06	1.070E-08
NNW	4400.	1.083E-08	671.	6.750E-10	671.	4.310E-07	5.167E-09	671.	3.546E-06	1.901E-08

DRESDEN SITE METEOROLOGICAL DATA 1/78 - 12/87

Note: Based on Reference 2 of Section F.2 and the formulas in Sections B.3 and B.4 of Appendix B. Used for beta air, beta skin, and inhalation dose pathways. See sections A.1.2, A.1.3 and A.1.4.2 of Appendix A. Used for produce and leafy vegetable pathways. See A.1.4 of Appendix A.

Table F-5a

X/Q and D/Q Maxima at or Beyond the Restricted Area Boundary

Downwind Direction	Elevated(Stack) Release Radius (meters)	X/Q (sec/m**3)	Radius (meters)	D/Q (1/m**2)	Mixed Mode(Vent) Release Radius (meters)	X/Q (sec/m**3)	D/Q (1/m**2)	Ground Level Release Radius (meters)	X/Q (sec/m**3)	D/Q (1/m**2)
N	4400.	1.470E-08	466.	1.046E-09	466.	9.968E-07	1.232E-08	466.	7.375E-06	4.036E-08
NNE	4023.	1.502E-08	698.	1.051E-09	698.	5.152E-07	6.619E-09	698.	3.645E-06	1.961E-08
NE	4400.	1.231E-08	646.	9.588E-10	646.	5.276E-07	5.692E-09	646.	4.202E-06	1.827E-08
ENE	4023.	1.100E-08	646.	8.886E-10	646.	3.461E-07	4.918E-09	646.	2.474E-06	1.345E-08
E	3600.	1.517E-08	689.	1.217E-09	689.	5.525E-07	7.074E-09	689.	3.492E-06	2.040E-08
ESE	3600.	1.417E-08	661.	1.341E-09	661.	4.830E-07	6.936E-09	661.	3.564E-06	1.997E-08
SE	3600.	1.350E-08	664.	1.385E-09	664.	4.187E-07	6.112E-09	664.	3.877E-06	1.916E-08
SSE	3219.	1.298E-08	744.	1.299E-09	744.	3.153E-07	4.734E-09	744.	3.016E-06	1.380E-08
S	4023.	9.552E-09	814.	8.181E-10	814.	1.977E-07	2.834E-09	814.	2.165E-06	8.827E-09
SSW	4023.	9.123E-09	789.	7.631E-10	789.	2.111E-07	2.694E-09	789.	2.169E-06	8.941E-09
SW	4400.	1.085E-08	420.	8.897E-10	414.	5.193E-07	5.643E-09	414.	6.356E-06	2.796E-08
WSW	4400.	1.232E-08	420.	7.963E-10	360.	5.431E-07	5.055E-09	360.	7.095E-06	2.980E-08
W	4828.	1.105E-08	454.	6.582E-10	454.	5.736E-07	5.881E-09	454.	5.859E-06	2.829E-08
WNW	4828.	8.765E-09	469.	6.124E-10	469.	7.098E-07	5.907E-09	469.	8.176E-06	2.969E-08
NW	4828.	9.337E-09	482.	6.915E-10	482.	4.885E-07	4.835E-09	482.	4.860E-06	2.173E-08
NNW	4400.	1.083E-08	466.	7.491E-10	466.	7.327E-07	8.268E-09	466.	6.214E-06	3.358E-08

DRESDEN SITE METEOROLOGICAL DATA 1/78 - 12/87

Table F-6

D/Q at the Nearest Milk Cow and Meat Animal Locations within 5 miles

Downwind Direction	Nearest Milk Cow D/Q(1/m**2) Radius (meters)	Elevated Release	Mixed Release	Ground Release	Nearest Meat Animal D/Q(1/m**2) Radius (meters)	Elevated Release	Mixed Release	Ground Release
N	8000.	1.073E-10	1.533E-10	3.231E-10	2300.	5.089E-10	1.232 E-09	2.916 E-09
NNE	8000.	1.103E-10	1.411E-10	2.954E-10	8000.	1.103 E-10	1.411 E-10	2.954 E-10
NE	8000.	9.092E-11	1.115E-10	2.434E-10	4000.	2.442 E-10	3.551 E-10	8.283 E-10
ENE	8000.	8.435E-11	9.923E-11	1.792E-10	7600.	9.183 E-10	1.083 E-10	1.965 E-10
E	8000.	1.282E-10	1.521E-10	3.011E-10	8000.	1.282 E-10	1.521 E-10	3.011 E-10
ESE	8000.	1.241E-10	1.363E-10	2.759E-10	8000.	1.241 E-10	1.363 E-10	2.759 E-10
SE	8000.	1.146E-10	1.308E-10	2.665E-10	8000.	1.146 E-10	1.308 E-10	2.665 E-10
SSE	8000.	1.126E-10	1.213E-10	2.303E-10	8000.	1.126 E-10	1.213 E-10	2.303 E-10
S	8000.	7.758E-11	8.690E-11	1.703E-10	8000.	7.683 E-11	8.604 E-11	1.685 E-10
SSW	8000.	7.408E-11	7.845E-11	1.640E-10	8000.	7.337 E-11	7.767 E-11	1.623 E-10
SW	8000.	8.618E-11	8.357E-11	1.870E-10	8000.	8.618 E-11	8.375 E-11	1.870 E-10
WSW	8000.	9.051E-11	7.512E-11	1.615E-10	8000.	9.051 E-11	7.512 E-11	1.615 E-10
W	8000.	7.826E-11	9.150E-11	2.177E-10	800.	5.665 E-10	2.944 E-09	1.160 E-08
WNW	8000.	5.945E-11	8.480E-11	2.401E-10	800.	5.121 E-10	3.015 E-09	1.280 E-08
NW	8000.	6.284E-11	7.514E-11	1.832E-10	800.	5.753 E-10	2.596 E-09	9.768 E-09
NNW	8000.	7.599E-11	1.095E-10	2.688E-10	1600.	5.010 E-10	1.505 E-09	4.520 E-09

DRESDEN SITE METEOROLOGICAL DATA 1/78 - *12/87*

Note: Based on Reference 2 of Section F.2 and the formulas in Section B.4 of Appendix B.

Table F-7

Maximum Offsite Finite Plume Gamma Dose Factors Based on 1 cm Depth at the Unrestricted Area Boundary for Kr-83m

Downwind Direction	Unrestricted Area Bound (meters)	Elevated(Stack) Release Radius (meters)	S (mrad/yr)/(uCi/sec)	SBAR	Mixed Mode(Vent) Release Radius (meters)	V (mrad/yr)/(uCi/sec)	VBAR	Ground Level Release Radius (meters)	G (mrad/yr)/(uCi/sec)	GBAR
N	768.	768.	1.111E-06	8.377E-07	768.	5.804E-05	4.377E-05	768.	3.601E-04	2.715E-04
NNE	1207.	1207.	1.254E-06	9.453E-07	1207.	2.901E-05	2.188E-05	1207.	1.645E-04	1.240E-04
NE	1100.	1100.	1.062E-06	8.010E-07	1100.	2.861E-05	2.157E-05	1100.	1.855E-04	1.399E-04
ENE	1244.	1244.	1.018E-06	7.677E-07	1244.	1.595E-05	1.202E-05	1244.	8.930E-05	6.733E-05
E	1000.	1000.	1.301E-06	9.808E-07	1000.	3.900E-05	2.941E-05	1000.	2.092E-04	1.577E-04
ESE	988.	988.	1.336E-06	1.007E-06	988.	3.237E-05	2.441E-05	988.	2.005E-04	1.512E-04
SE	1000.	1000.	1.414E-06	1.066E-06	1000.	2.828E-05	2.133E-05	1000.	2.078E-04	1.567E-04
SSE	792.	792.	1.538E-06	1.160E-06	792.	3.462E-05	2.610E-05	792.	2.798E-04	2.110E-04
S	841.	841.	1.095E-06	8.259E-07	841.	2.335E-05	1.761E-05	841.	2.124E-04	1.601E-04
SSW	853.	853.	1.009E-06	7.606E-07	853.	2.332E-05	1.759E-05	853.	1.978E-04	1.491E-04
SW	1024.	1024.	8.474E-07	6.389E-07	1024.	1.920E-05	1.448E-05	1024.	1.648E-04	1.243E-04
WSW	1170.	1170.	8.268E-07	6.234E-07	1170.	1.520E-05	1.146E-05	1170.	1.147E-04	8.650E-05
W	1756.	1756.	8.303E-07	6.261E-07	1756.	1.322E-05	9.966E-06	1756.	7.461E-05	5.626E-05
WNW	1219.	1219.	6.944E-07	5.236E-07	1219.	2.191E-05	1.652E-05	1219.	1.789E-04	1.349E-04
NW	756.	756.	7.464E-07	5.628E-07	756.	3.036E-05	2.289E-05	756.	2.549E-04	1.922E-04
NNW	671.	671.	7.749E-07	5.843E-07	671.	5.274E-05	3.977E-05	671.	3.846E-04	2.900E-04

DRESDEN SITE METEOROLOGICAL DATA 1/78 - 12/87

Note: Based on References 1 and 2 of Section F.2 and the formulas in Sections B.5 and B.6 of Appendix B.

Table F-7 (Continued)

Maximum Offsite Finite Plume Gamma Dose Factors Based on 1 cm Depth at the Unrestricted Area Boundary for Kr-85m

Downwind Direction	Unrestricted Area Bound (meters)	Elevated(Stack) Release Radius (meters)	S (mrad/yr)/(uCi/sec)	SBAR	Mixed Mode(Vent) Release Radius (meters)	V (mrad/yr)/(uCi/sec)	VBAR	Ground Level Release Radius (meters)	G (mrad/yr)/(uCi/sec)	GBAR
N	768.	768.	1.399E-04	1.354E-04	768.	6.020E-04	5.795E-04	768.	1.896E-03	1.815E-03
NNE	1207.	1207.	9.359E-05	9.053E-05	1207.	3.303E-04	3.181E-04	1207.	9.659E-04	9.257E-04
NE	1100.	1100.	9.061E-05	8.765E-05	1100.	3.296E-04	3.175E-04	1100.	1.053E-03	1.009E-03
ENE	1244.	1244.	7.359E-05	7.118E-05	1244.	2.088E-04	2.012E-04	1244.	5.484E-04	5.257E-04
E	1000.	1000.	1.064E-04	1.030E-04	1000.	4.299E-04	4.140E-04	1000.	1.216E-03	1.165E-03
ESE	988.	988.	9.782E-05	9.462E-05	988.	3.568E-04	3.436E-04	988.	1.154E-03	1.106E-03
SE	1000.	1000.	9.428E-05	9.118E-05	1000.	3.260E-04	3.140E-04	1000.	1.186E-03	1.136E-03
SSE	792.	792.	1.046E-04	1.012E-04	792.	3.889E-04	3.745E-04	792.	1.497E-03	1.433E-03
S	841.	841.	8.695E-05	8.411E-05	841.	3.045E-04	2.934E-04	841.	1.207E-03	1.156E-03
SSW	853.	853.	8.163E-05	7.896E-05	853.	2.929E-04	2.823E-04	853.	1.118E-03	1.071E-03
SW	1024.	1024.	7.425E-05	7.182E-05	1024.	2.735E-04	2.637E-04	1024.	1.008E-03	9.664E-04
WSW	1170.	1170.	7.278E-05	7.041E-05	1170.	2.394E-04	2.309E-04	1170.	7.281E-04	6.982E-04
W	1756.	1756.	4.764E-05	4.607E-05	1756.	1.734E-04	1.671E-04	1756.	5.186E-04	4.977E-04
WNW	1219.	1219.	5.560E-05	5.379E-05	1219.	2.513E-04	2.420E-04	1219.	1.060E-03	1.016E-03
NW	756.	756.	9.757E-05	9.441E-05	756.	3.808E-04	3.669E-04	756.	1.353E-03	1.295E-03
NNW	671.	671.	1.240E-04	1.200E-04	671.	5.578E-04	5.371E-04	671.	1.955E-03	1.871E-03

DRESDEN SITE METEOROLOGICAL DATA 1/78 - 12/87

Table F-7 (Continued)

Maximum Offsite Finite Plume Gamma Dose Factors Based on 1 cm Depth at the Unrestricted Area Boundary for Kr-85

Downwind Direction	Unrestricted Area Bound (meters)	Elevated(Stack) Release Radius (meters)	S (mrad/yr)/(uCi/sec)	SBAR	Mixed Mode(Vent) Release Radius (meters)	V (mrad/yr)/(uCi/sec)	VBAR	Ground Level Release Radius (meters)	G (mrad/yr)/(uCi/sec)	GBAR
N	768.	768.	1.955E-06	1.890E-06	768.	6.993E-06	6.763E-06	768.	2.088E-05	2.019E-05
NNE	1207.	1207.	1.281E-06	1.239E-06	1207.	3.867E-06	3.740E-06	1207.	1.077E-05	1.041E-05
NE	1100.	1100.	1.253E-06	1.212E-06	1100.	3.897E-06	3.768E-06	1100.	1.187E-05	1.147E-05
ENE	1244.	1244.	1.020E-06	9.860E-07	1244.	2.489E-06	2.407E-06	1244.	6.226E-06	6.021E-06
E	1000.	1000.	1.472E-06	1.424E-06	1000.	5.039E-06	4.873E-06	1000.	1.354E-05	1.309E-05
ESE	988.	988.	1.348E-06	1.304E-06	988.	4.188E-06	4.050E-06	988.	1.287E-05	1.245E-05
SE	1000.	1000.	1.300E-06	1.257E-06	1000.	3.825E-06	3.698E-06	1000.	1.330E-05	1.286E-05
SSE	792.	792.	1.448E-06	1.400E-06	792.	4.575E-06	4.424E-06	792.	1.663E-05	1.608E-05
S	841.	841.	1.240E-06	1.199E-06	841.	3.624E-06	3.504E-06	841.	1.358E-05	1.313E-05
SSW	853.	853.	1.157E-06	1.119E-06	853.	3.469E-06	3.354E-06	853.	1.252E-05	1.210E-05
SW	1024.	1024.	1.047E-06	1.012E-06	1024.	3.279E-06	3.170E-06	1024.	1.141E-05	1.104E-05
WSW	1170.	1170.	1.022E-06	9.885E-07	1170.	2.863E-06	2.769E-06	1170.	8.279E-06	8.006E-06
W	1756.	1756.	6.701E-07	6.480E-07	1756.	2.062E-06	1.994E-06	1756.	5.967E-06	5.770E-06
WNW	1219.	1219.	7.759E-07	7.503E-07	1219.	2.953E-06	2.856E-06	1219.	1.208E-05	1.168E-05
NW	756.	756.	1.375E-06	1.330E-06	756.	4.511E-06	4.362E-06	756.	1.501E-05	1.451E-05
NNW	671.	671.	1.750E-06	1.692E-06	671.	6.521E-06	6.306E-06	671.	2.132E-05	2.062E-05

DRESDEN SITE METEOROLOGICAL DATA 1/78 - 12/87

Table F-7 (Continued)

Maximum Offsite Finite Plume Gamma Dose Factors Based on 1 cm Depth at the Unrestricted Area Boundary for Kr-87

Downwind Direction	Unrestricted Area Bound (meters)	Elevated(Stack) Release Radius (meters)	S (mrad/yr)/(uCi/sec)	SBAR	Mixed Mode(Vent) Release Radius (meters)	V (mrad/yr)/(uCi/sec)	VBAR	Ground Level Release Radius (meters)	G (mrad/yr)/(uCi/sec)	GBAR
N	768.	768.	6.917E-04	6.720E-04	768.	2.070E-03	2.010E-03	768.	5.546E-03	5.385E-03
NNE	1207.	1207.	4.420E-04	4.294E-04	1207.	1.116E-03	1.084E-03	1207.	2.791E-03	2.710E-03
NE	1100.	1100.	4.363E-04	4.239E-04	1100.	1.116E-03	1.083E-03	1100.	2.958E-03	2.872E-03
ENE	1244.	1244.	3.520E-04	3.419E-04	1244.	7.110E-04	6.905E-04	1244.	1.547E-03	1.502E-03
E	1000.	1000.	5.151E-04	5.004E-04	1000.	1.453E-03	1.411E-03	1000.	3.526E-03	3.423E-03
ESE	988.	988.	4.711E-04	4.577E-04	988.	1.210E-03	1.176E-03	988.	3.332E-03	3.236E-03
SE	1000.	1000.	4.545E-04	4.416E-04	1000.	1.122E-03	1.089E-03	1000.	3.382E-03	3.283E-03
SSE	792.	792.	5.140E-04	4.994E-04	792.	1.351E-03	1.312E-03	792.	4.329E-03	4.203E-03
S	841.	841.	4.278E-04	4.157E-04	841.	1.065E-03	1.034E-03	841.	3.397E-03	3.298E-03
SSW	853.	853.	4.031E-04	3.916E-04	853.	1.018E-03	9.886E-04	853.	3.178E-03	3.086E-03
SW	1024.	1024.	3.642E-04	3.538E-04	1024.	9.449E-04	9.177E-04	1024.	2.821E-03	2.739E-03
WSW	1170.	1170.	3.548E-04	3.447E-04	1170.	8.290E-04	8.051E-04	1170.	2.035E-03	1.976E-03
W	1756.	1756.	2.211E-04	2.148E-04	1756.	5.761E-04	5.595E-04	1756.	1.444E-03	1.402E-03
WNW	1219.	1219.	2.687E-04	2.610E-04	1219.	8.507E-04	8.261E-04	1219.	2.919E-03	2.834E-03
NW	756.	756.	4.925E-04	4.785E-04	756.	1.328E-03	1.289E-03	756.	3.891E-03	3.778E-03
NNW	671.	671.	6.252E-04	6.074E-04	671.	1.931E-03	1.875E-03	671.	5.808E-03	5.639E-03

DRESDEN SITE METEOROLOGICAL DATA 1/78 - 12/87

Table F-7 (Continued)

Maximum Offsite Finite Plume Gamma Dose Factors Based on 1 cm Depth at the Unrestricted Area Boundary for Kr-88

Downwind Direction	Unrestricted Area Bound (meters)	Elevated(Stack) Release Radius (meters)	S (mrad/yr)/(uCi/sec)	SBAR	Mixed Mode(Vent) Release Radius (meters)	V (mrad/yr)/(uCi/sec)	VBAR	Ground Level Release Radius (meters)	G (mrad/yr)/(uCi/sec)	GBAR
N	768.	768.	1.798E-03	1.750E-03	768.	5.062E-03	4.922E-03	768.	1.364E-02	1.325E-02
NNE	1207.	1207.	1.145E-03	1.115E-03	1207.	2.773E-03	2.696E-03	1207.	6.973E-03	6.774E-03
NE	1100.	1100.	1.134E-03	1.104E-03	1100.	2.790E-03	2.713E-03	1100.	7.521E-03	7.305E-03
ENE	1244.	1244.	9.211E-04	8.966E-04	1244.	1.790E-03	1.741E-03	1244.	3.954E-03	3.841E-03
E	1000.	1000.	1.337E-03	1.301E-03	1000.	3.603E-03	3.504E-03	1000.	8.777E-03	8.526E-03
ESE	988.	988.	1.221E-03	1.189E-03	988.	3.006E-03	2.923E-03	988.	8.327E-03	8.089E-03
SE	1000.	1000.	1.180E-03	1.149E-03	1000.	2.775E-03	2.699E-03	1000.	8.529E-03	8.284E-03
SSE	792.	792.	1.333E-03	1.297E-03	792.	3.341E-03	3.250E-03	792.	1.079E-02	1.048E-02
S	841.	841.	1.141E-03	1.110E-03	841.	2.653E-03	2.580E-03	841.	8.637E-03	8.389E-03
SSW	853.	853.	1.067E-03	1.038E-03	853.	2.528E-03	2.458E-03	853.	8.010E-03	7.780E-03
SW	1024.	1024.	9.589E-04	9.335E-04	1024.	2.381E-03	2.316E-03	1024.	7.206E-03	7.000E-03
WSW	1170.	1170.	9.327E-04	9.079E-04	1170.	2.083E-03	2.026E-03	1170.	5.217E-03	5.068E-03
W	1756.	1756.	5.907E-04	5.749E-04	1756.	1.464E-03	1.424E-03	1756.	3.745E-03	3.638E-03
WNW	1219.	1219.	7.062E-04	6.874E-04	1219.	2.122E-03	2.063E-03	1219.	7.530E-03	7.314E-03
NW	756.	756.	1.283E-03	1.249E-03	756.	3.288E-03	3.198E-03	756.	9.693E-03	9.414E-03
NNW	671.	671.	1.627E-03	1.584E-03	671.	4.738E-03	4.608E-03	671.	1.410E-02	1.369E-02

DRESDEN SITE METEOROLOGICAL DATA 1/78 - 12/87

Table F-7 (Continued)

Maximum Offsite Finite Plume Gamma Dose Factors Based on 1 cm Depth at the Unrestricted Area Boundary for Kr-89

Downwind Direction	Unrestricted Area Bound (meters)	Elevated(Stack) Release Radius (meters)	S (mrad/yr)/(uCi/sec)	SBAR	Mixed Mode(Vent) Release Radius (meters)	V (mrad/yr)/(uCi/sec)	VBAR	Ground Level Release Radius (meters)	G (mrad/yr)/(uCi/sec)	GBAR
N	768.	768.	8.646E-04	8.402E-04	768.	2.184E-03	2.122E-03	768.	3.839E-03	3.729E-03
NNE	1207.	1207.	4.473E-04	4.346E-04	1207.	7.989E-04	7.761E-04	1207.	1.144E-03	1.111E-03
NE	1100.	1100.	4.367E-04	4.243E-04	1100.	8.040E-04	7.811E-04	1100.	1.199E-03	1.165E-03
ENE	1244.	1244.	2.952E-04	2.869E-04	1244.	4.535E-04	4.405E-04	1244.	5.737E-04	5.573E-04
E	1000.	1000.	5.470E-04	5.316E-04	1000.	1.225E-03	1.190E-03	1000.	1.926E-03	1.871E-03
ESE	988.	988.	5.116E-04	4.972E-04	988.	1.030E-03	1.000E-03	988.	1.737E-03	1.687E-03
SE	1000.	1000.	4.765E-04	4.631E-04	1000.	9.283E-04	9.017E-04	1000.	1.559E-03	1.514E-03
SSE	792.	792.	6.139E-04	5.966E-04	792.	1.268E-03	1.231E-03	792.	2.376E-03	2.308E-03
S	841.	841.	4.316E-04	4.195E-04	841.	8.997E-04	8.740E-04	841.	1.470E-03	1.428E-03
SSW	853.	853.	4.106E-04	3.990E-04	853.	8.384E-04	8.145E-04	853.	1.447E-03	1.405E-03
SW	1024.	1024.	3.383E-04	3.288E-04	1024.	6.604E-04	6.415E-04	1024.	1.090E-03	1.059E-03
WSW	1170.	1170.	2.800E-04	2.721E-04	1170.	4.872E-04	4.732E-04	1170.	6.582E-04	6.393E-04
W	1756.	1756.	1.180E-04	1.147E-04	1756.	2.232E-04	2.168E-04	1756.	2.784E-04	2.704E-04
WNW	1219.	1219.	2.179E-04	2.118E-04	1219.	5.131E-04	4.984E-04	1219.	9.315E-04	9.048E-04
NW	756.	756.	5.630E-04	5.471E-04	756.	1.241E-03	1.206E-03	756.	2.287E-03	2.221E-03
NNW	671.	671.	7.830E-04	7.610E-04	671.	2.075E-03	2.016E-03	671.	4.479E-03	4.350E-03

DRESDEN SITE METEOROLOGICAL DATA 1/78 - 12/87

Table F-7 (Continued)

Maximum Offsite Finite Plume Gamma Dose Factors Based on 1 cm Depth at the Unrestricted Area Boundary for Kr-90

Downwind Direction	Unrestricted Area Bound (meters)	Elevated(Stack) Release Radius (meters)	S (mrad/yr)/(uCi/sec)	SBAR	Mixed Mode(Vent) Release Radius (meters)	V (mrad/yr)/(uCi/sec)	VBAR	Ground Level Release Radius (meters)	G (mrad/yr)/(uCi/sec)	GBAR
N	768.	768.	1.568E-04	1.522E-04	768.	2.579E-04	2.501E-04	768.	2.558E-04	2.480E-04
NNE	1207.	1207.	3.689E-05	3.581E-05	1207.	3.215E-05	3.118E-05	1207.	2.553E-05	2.476E-05
NE	1100.	1100.	3.809E-05	3.697E-05	1100.	3.434E-05	3.331E-05	1100.	2.511E-05	2.435E-05
ENE	1244.	1244.	1.660E-05	1.611E-05	1244.	1.571E-05	1.524E-05	1244.	1.176E-05	1.141E-05
E	1000.	1000.	5.925E-05	5.751E-05	1000.	7.864E-05	7.628E-05	1000.	6.596E-05	6.396E-05
ESE	988.	988.	5.808E-05	5.637E-05	988.	6.960E-05	6.751E-05	988.	6.042E-05	5.858E-05
SE	1000.	1000.	4.406E-05	4.276E-05	1000.	5.157E-05	5.003E-05	1000.	4.271E-05	4.142E-05
SSE	792.	792.	8.809E-05	8.550E-05	792.	1.063E-04	1.032E-04	792.	8.990E-05	8.717E-05
S	841.	841.	4.794E-05	4.653E-05	841.	5.718E-05	5.547E-05	841.	4.271E-05	4.142E-05
SSW	853.	853.	4.498E-05	4.366E-05	853.	5.154E-05	5.000E-05	853.	3.559E-05	3.451E-05
SW	1024.	1024.	2.322E-05	2.254E-05	1024.	2.362E-05	2.292E-05	1024.	1.401E-05	1.359E-05
WSW	1170.	1170.	1.048E-05	1.018E-05	1170.	8.515E-06	8.260E-06	1170.	4.127E-06	4.002E-06
W	1756.	1756.	1.866E-06	1.811E-06	1756.	1.530E-06	1.484E-06	1756.	7.900E-07	7.660E-07
WNW	1219.	1219.	1.141E-05	1.108E-05	1219.	1.162E-05	1.127E-05	1219.	7.712E-06	7.478E-06
NW	756.	756.	7.050E-05	6.843E-05	756.	9.619E-05	9.331E-05	756.	9.617E-05	9.325E-05
NNW	671.	671.	1.395E-04	1.354E-04	671.	2.516E-04	2.440E-04	671.	3.058E-04	2.965E-04

DRESDEN SITE METEOROLOGICAL DATA 1/78 - 12/87

Table F-7 (Continued)

Maximum Offsite Finite Plume Gamma Dose Factors Based on 1 cm Depth at the Unrestricted Area Boundary for Xe-131m

Downwind Direction	Unrestricted Area Bound (meters)	Elevated(Stack) Release Radius (meters)	S (mrad/yr)/(uCi/sec)	SBAR	Mixed Mode(Vent) Release Radius (meters)	V (mrad/yr)/(uCi/sec)	VBAR	Ground Level Release Radius (meters)	G (mrad/yr)/(uCi/sec)	GBAR
N	768.	768.	3.860E-06	3.549E-06	768.	5.875E-05	4.699E-05	768.	3.373E-04	2.627E-04
NNE	1207.	1207.	2.996E-06	2.686E-06	1207.	3.052E-05	2.450E-05	1207.	1.588E-04	1.241E-04
NE	1100.	1100.	2.780E-06	2.510E-06	1100.	3.055E-05	2.453E-05	1100.	1.832E-04	1.429E-04
ENE	1244.	1244.	2.389E-06	2.138E-06	1244.	1.775E-05	1.433E-05	1244.	9.009E-05	7.042E-05
E	1000.	1000.	3.301E-06	2.974E-06	1000.	4.098E-05	3.284E-05	1000.	2.011E-04	1.571E-04
ESE	988.	988.	3.141E-06	2.814E-06	988.	3.367E-05	2.700E-05	988.	1.935E-04	1.511E-04
SE	1000.	1000.	3.130E-06	2.790E-06	1000.	2.958E-05	2.377E-05	1000.	2.037E-04	1.589E-04
SSE	792.	792.	3.440E-06	3.070E-06	792.	3.584E-05	2.877E-05	792.	2.679E-04	2.087E-04
S	841.	841.	2.742E-06	2.468E-06	841.	2.515E-05	2.034E-05	841.	2.097E-04	1.636E-04
SSW	853.	853.	2.552E-06	2.299E-06	853.	2.495E-05	2.014E-05	853.	1.939E-04	1.512E-04
SW	1024.	1024.	2.264E-06	2.047E-06	1024.	2.129E-05	1.730E-05	1024.	1.655E-04	1.294E-04
WSW	1170.	1170.	2.221E-06	2.008E-06	1170.	1.748E-05	1.427E-05	1170.	1.168E-04	9.138E-05
W	1756.	1756.	1.707E-06	1.508E-06	1756.	1.464E-05	1.183E-05	1756.	7.787E-05	6.110E-05
WNW	1219.	1219.	1.748E-06	1.573E-06	1219.	2.310E-05	1.855E-05	1219.	1.829E-04	1.428E-04
NW	756.	756.	2.670E-06	2.458E-06	756.	3.276E-05	2.642E-05	756.	2.430E-04	1.892E-04
NNW	671.	671.	3.255E-06	3.020E-06	671.	5.352E-05	4.285E-05	671.	3.526E-04	2.744E-04

DRESDEN SITE METEOROLOGICAL DATA 1/78 - 12/87

Table F-7 (Continued)

Maximum Offsite Finite Plume Gamma Dose Factors Based on 1 cm Depth at the Unrestricted Area Boundary for Xe-133m

Downwind Direction	Unrestricted Area Bound (meters)	Elevated(Stack) Release Radius (meters)	S (mrad/yr)/(uCi/sec)	SBAR	Mixed Mode(Vent) Release Radius (meters)	V (mrad/yr)/(uCi/sec)	VBAR	Ground Level Release Radius (meters)	G (mrad/yr)/(uCi/sec)	GBAR
N	768.	768.	2.077E-05	1.991E-05	768.	1.316E-04	1.171E-04	768.	5.699E-04	4.854E-04
NNE	1207.	1207.	1.432E-05	1.364E-05	1207.	7.079E-05	6.329E-05	1207.	2.781E-04	2.384E-04
NE	1100.	1100.	1.375E-05	1.312E-05	1100.	7.088E-05	6.337E-05	1100.	3.146E-04	2.689E-04
ENE	1244.	1244.	1.132E-05	1.078E-05	1244.	4.336E-05	3.901E-05	1244.	1.587E-04	1.362E-04
E	1000.	1000.	1.617E-05	1.542E-05	1000.	9.343E-05	8.334E-05	1000.	3.512E-04	3.009E-04
ESE	988.	988.	1.497E-05	1.425E-05	988.	7.719E-05	6.890E-05	988.	3.362E-04	2.878E-04
SE	1000.	1000.	1.453E-05	1.382E-05	1000.	6.921E-05	6.194E-05	1000.	3.510E-04	3.001E-04
SSE	792.	792.	1.607E-05	1.529E-05	792.	8.308E-05	7.427E-05	792.	4.526E-04	3.856E-04
S	841.	841.	1.335E-05	1.273E-05	841.	6.223E-05	5.608E-05	841.	3.601E-04	3.077E-04
SSW	853.	853.	1.248E-05	1.190E-05	853.	6.060E-05	5.449E-05	853.	3.327E-04	2.842E-04
SW	1024.	1024.	1.128E-05	1.077E-05	1024.	5.478E-05	4.959E-05	1024.	2.917E-04	2.504E-04
WSW	1170.	1170.	1.106E-05	1.056E-05	1170.	4.676E-05	4.251E-05	1170.	2.081E-04	1.790E-04
W	1756.	1756.	7.554E-06	7.162E-06	1756.	3.599E-05	3.241E-05	1756.	1.432E-04	1.239E-04
WNW	1219.	1219.	8.502E-06	8.106E-06	1219.	5.377E-05	4.810E-05	1219.	3.164E-04	2.707E-04
NW	756.	756.	1.446E-05	1.386E-05	756.	7.908E-05	7.105E-05	756.	4.100E-04	3.491E-04
NNW	671.	671.	1.823E-05	1.751E-05	671.	1.211E-04	1.079E-04	671.	5.909E-04	5.025E-04

DRESDEN SITE METEOROLOGICAL DATA 1/78 - 12/87

Table F-7 (Continued)

Maximum Offsite Finite Plume Gamma Dose Factors Based on 1 cm Depth at the Unrestricted Area Boundary for Xe-133

Downwind Direction	Unrestricted Area Bound (meters)	Elevated(Stack) Release Radius (meters)	S (mrad/yr)/(uCi/sec)	SBAR	Mixed Mode(Vent) Release Radius (meters)	V (mrad/yr)/(uCi/sec)	VBAR	Ground Level Release Radius (meters)	G (mrad/yr)/(uCi/sec)	GBAR
N	768.	768.	1.874E-05	1.809E-05	768.	1.481E-04	1.356E-04	768.	6.304E-04	5.584E-04
NNE	1207.	1207.	1.362E-05	1.308E-05	1207.	7.994E-05	7.347E-05	1207.	3.114E-04	2.775E-04
NE	1100.	1100.	1.279E-05	1.230E-05	1100.	7.969E-05	7.322E-05	1100.	3.505E-04	3.114E-04
ENE	1244.	1244.	1.062E-05	1.019E-05	1244.	4.887E-05	4.512E-05	1244.	1.780E-04	1.588E-04
E	1000.	1000.	1.507E-05	1.448E-05	1000.	1.055E-04	9.682E-05	1000.	3.930E-04	3.500E-04
ESE	988.	988.	1.406E-05	1.350E-05	988.	8.706E-05	7.992E-05	988.	3.755E-04	3.341E-04
SE	1000.	1000.	1.367E-05	1.311E-05	1000.	7.806E-05	7.179E-05	1000.	3.909E-04	3.474E-04
SSE	792.	792.	1.491E-05	1.430E-05	792.	9.314E-05	8.555E-05	792.	5.002E-04	4.430E-04
S	841.	841.	1.201E-05	1.154E-05	841.	6.991E-05	6.460E-05	841.	4.011E-04	3.563E-04
SSW	853.	853.	1.126E-05	1.082E-05	853.	6.822E-05	6.295E-05	853.	3.704E-04	3.290E-04
SW	1024.	1024.	1.031E-05	9.919E-06	1024.	6.164E-05	5.715E-05	1024.	3.280E-04	2.926E-04
WSW	1170..	1170.	1.020E-05	9.811E-06	1170.	5.274E-05	4.906E-05	1170.	2.347E-04	2.097E-04
W	1756.	1756.	7.325E-06	7.009E-06	1756.	4.041E-05	3.732E-05	1756.	1.627E-04	1.460E-04
WNW	1219.	1219.	7.875E-06	7.566E-06	1219.	6.054E-05	5.564E-05	1219.	3.538E-04	3.147E-04
NW	756.	756.	1.282E-05	1.237E-05	756.	8.885E-05	8.193E-05	756.	4.536E-04	4.018E-04
NNW	671.	671.	1.609E-05	1.556E-05	671.	1.356E-04	1.242E-04	671.	6.514E-04	5.762E-04

DRESDEN SITE METEOROLOGICAL DATA 1/78 - 12/87

Table F-7 (Continued)

Maximum Offsite Finite Plume Gamma Dose Factors Based on 1 cm Depth at the Unrestricted Area Boundary for Xe-135m

Downwind Direction	Unrestricted Area Bound (meters)	Elevated(Stack) Release Radius (meters)	S (mrad/yr)/(uCi/sec)	SBAR	Mixed Mode(Vent) Release Radius (meters)	V (mrad/yr)/(uCi/sec)	VBAR	Ground Level Release Radius (meters)	G (mrad/yr)/(uCi/sec)	GBAR
N	768.	768.	3.231E-04	3.124E-04	768.	1.124E-03	1.085E-03	768.	2.824E-03	2.720E-03
NNE	1207.	1207.	2.031E-04	1.964E-04	1207.	5.521E-04	5.329E-04	1207.	1.269E-03	1.222E-03
NE	1100.	1100.	1.979E-04	1.914E-04	1100.	5.468E-04	5.279E-04	1100.	1.305E-03	1.257E-03
ENE	1244.	1244.	1.536E-04	1.485E-04	1244.	3.362E-04	3.247E-04	1244.	6.595E-04	6.355E-04
E	1000.	1000.	2.367E-04	2.288E-04	1000.	7.411E-04	7.153E-04	1000.	1.693E-03	1.631E-03
ESE	988.	988.	2.177E-04	2.105E-04	988.	6.173E-04	5.958E-04	988.	1.571E-03	1.514E-03
SE	1000.	1000.	2.084E-04	2.015E-04	1000.	5.726E-04	5.528E-04	1000.	1.533E-03	1.477E-03
SSE	792.	792.	2.399E-04	2.320E-04	792.	7.020E-04	6.777E-04	792.	2.066E-03	1.990E-03
S	841.	841.	1.838E-04	1.777E-04	841.	5.365E-04	5.180E-04	841.	1.480E-03	1.426E-03
SSW	853.	853.	1.761E-04	1.702E-04	853.	5.143E-04	4.966E-04	853.	1.442E-03	1.389E-03
SW	1024.	1024.	1.595E-04	1.542E-04	1024.	4.548E-04	4.392E-04	1024.	1.217E-03	1.173E-03
WSW	1170.	1170.	1.518E-04	1.468E-04	1170.	3.897E-04	3.764E-04	1170.	8.550E-04	8.240E-04
W	1756.	1756.	8.725E-05	8.434E-05	1756.	2.491E-04	2.405E-04	1756.	5.456E-04	5.260E-04
WNW	1219.	1219.	1.152E-04	1.114E-04	1219.	4.090E-04	3.949E-04	1219.	1.225E-03	1.180E-03
NW	756.	756.	2.251E-04	2.177E-04	756.	6.857E-04	6.621E-04	756.	1.873E-03	1.804E-03
NNW	671.	671.	2.899E-04	2.803E-04	671.	1.043E-03	1.007E-03	671.	3.115E-03	3.000E-03

DRESDEN SITE METEOROLOGICAL DATA 1/78 - 12/87

Table F-7 (Continued)

Maximum Offsite Finite Plume Gamma Dose Factors Based on 1 cm Depth at the Unrestricted Area Boundary for Xe-135

Downwind Direction	Unrestricted Area Bound (meters)	Elevated(Stack) Release Radius (meters)	S (mrad/yr)/(uCi/sec)	SBAR	Mixed Mode(Vent) Release Radius (meters)	V (mrad/yr)/(uCi/sec)	VBAR	Ground Level Release Radius (meters)	G (mrad/yr)/(uCi/sec)	GBAR
N	768.	768.	1.977E-04	1.913E-04	768.	8.258E-04	7.984E-04	768.	2.561E-03	2.473E-03
NNE	1207.	1207.	1.320E-04	1.277E-04	1207.	4.556E-04	4.406E-04	1207.	1.315E-03	1.270E-03
NE	1100.	1100.	1.279E-04	1.238E-04	1100.	4.558E-04	4.407E-04	1100.	1.440E-03	1.391E-03
ENE	1244.	1244.	1.040E-04	1.007E-04	1244.	2.898E-04	2.803E-04	1244.	7.532E-04	7.276E-04
E	1000.	1000.	1.502E-04	1.454E-04	1000.	5.929E-04	5.733E-04	1000.	1.654E-03	1.597E-03
ESE	988.	988.	1.380E-04	1.335E-04	988.	4.921E-04	4.758E-04	988.	1.571E-03	1.517E-03
SE	1000.	1000.	1.329E-04	1.287E-04	1000.	4.493E-04	4.344E-04	1000.	1.617E-03	1.562E-03
SSE	792.	792.	1.475E-04	1.427E-04	792.	5.356E-04	5.179E-04	792.	2.030E-03	1.960E-03
S	841.	841.	1.235E-04	1.195E-04	841.	4.212E-04	4.073E-04	841.	1.649E-03	1.593E-03
SSW	853.	853.	1.157E-04	1.120E-04	853.	4.047E-04	3.914E-04	853.	1.524E-03	1.472E-03
SW	1024.	1024.	1.052E-04	1.018E-04	1024.	3.800E-04	3.675E-04	1024.	1.384E-03	1.337E-03
WSW	1170.	1170.	1.031E-04	9.974E-05	1170.	3.328E-04	3.218E-04	1170.	1.002E-03	9.680E-04
W	1756.	1756.	6.772E-05	6.553E-05	1756.	2.411E-04	2.332E-04	1756.	7.180E-04	6.938E-04
WNW	1219.	1219.	7.868E-05	7.615E-05	1219.	3.470E-04	3.355E-04	1219.	1.459E-03	1.409E-03
NW	756.	756.	1.379E-04	1.335E-04	756.	5.259E-04	5.086E-04	756.	1.834E-03	1.771E-03
NNW	671.	671.	1.754E-04	1.697E-04	671.	7.662E-04	7.408E-04	671.	2.627E-03	2.537E-03

DRESDEN SITE METEOROLOGICAL DATA 1/78 - 12/87

Table F-7 (Continued)

Maximum Offsite Finite Plume Gamma Dose Factors Based on 1 cm Depth at the Unrestricted Area Boundary for Xe-137

Downwind Direction	Unrestricted Area Bound (meters)	Elevated(Stack) Release Radius (meters)	S (mrad/yr)/(uCi/sec)	SBAR	Mixed Mode(Vent) Release Radius (meters)	V (mrad/yr)/(uCi/sec)	VBAR	Ground Level Release Radius (meters)	G (mrad/yr)/(uCi/sec)	GBAR
N	768.	768.	1.107E-04	1.071E-04	768.	3.275E-04	3.170E-04	768.	6.309E-04	6.104E-04
NNE	1207.	1207.	6.023E-05	5.830E-05	1207.	1.264E-04	1.223E-04	1207.	2.017E-04	1.952E-04
NE	1100.	1100.	5.847E-05	5.659E-05	1100.	1.267E-04	1.226E-04	1100.	2.117E-04	2.049E-04
ENE	1244.	1244.	4.063E-05	3.933E-05	1244.	7.244E-05	7.011E-05	1244.	1.013E-04	9.801E-05
E	1000.	1000.	7.256E-05	7.024E-05	1000.	1.894E-04	1.833E-04	1000.	3.270E-04	3.164E-04
ESE	988.	988.	6.769E-05	6.552E-05	988.	1.588E-04	1.537E-04	988.	2.954E-04	2.859E-04
SE	1000.	1000.	6.336E-05	6.133E-05	1000.	1.436E-04	1.389E-04	1000.	2.687E-04	2.600E-04
SSE	792.	792.	7.937E-05	7.683E-05	792.	1.916E-04	1.855E-04	792.	4.020E-04	3.890E-04
S	841.	841.	5.651E-05	5.470E-05	841.	1.378E-04	1.334E-04	841.	2.539E-04	2.457E-04
SSW	853.	853.	5.384E-05	5.212E-05	853.	1.293E-04	1.251E-04	853.	2.520E-04	2.438E-04
SW	1024.	1024.	4.546E-05	4.400E-05	1024.	1.042E-04	1.009E-04	1024.	1.939E-04	1.876E-04
WSW	1170.	1170.	3.874E-05	3.750E-05	1170.	7.913E-05	7.658E-05	1170.	1.209E-04	1.170E-04
W	1756.	1756.	1.752E-05	1.696E-05	1756.	3.873E-05	3.748E-05	1756.	5.480E-05	5.302E-05
WNW	1219.	1219.	2.999E-05	2.903E-05	1219.	8.360E-05	8.091E-05	1219.	1.722E-04	1.666E-04
NW	756.	756.	7.264E-05	7.031E-05	756.	1.876E-04	1.816E-04	756.	3.834E-04	3.710E-04
NNW	671.	671.	9.950E-05	9.632E-05	671.	3.095E-04	2.995E-04	671.	7.314E-04	7.077E-04

DRESDEN SITE METEOROLOGICAL DATA 1/78 - 12/87

Table F-7 (Continued)

Maximum Offsite Finite Plume Gamma Dose Factors Based on 1 cm Depth at the Unrestricted Area Boundary for Xe-138

Downwind Direction	Unrestricted Area Bound (meters)	Elevated(Stack) Release Radius (meters)	S (mrad/yr)/(uCi/sec)	SBAR	Mixed Mode(Vent) Release Radius (meters)	V (mrad/yr)/(uCi/sec)	VBAR	Ground Level Release Radius (meters)	G (mrad/yr)/(uCi/sec)	GBAR
N	768.	768.	8.543E-04	8.302E-04	768.	2.494E-03	2.422E-03	768.	5.853E-03	5.681E-03
NNE	1207.	1207.	5.254E-04	5.106E-04	1207.	1.219E-03	1.184E-03	1207.	2.614E-03	2.537E-03
NE	1100.	1100.	5.164E-04	5.019E-04	1100.	1.212E-03	1.177E-03	1100.	2.684E-03	2.605E-03
ENE	1244.	1244.	3.998E-04	3.885E-04	1244.	7.482E-04	7.267E-04	1244.	1.362E-03	1.322E-03
E	1000.	1000.	6.190E-04	6.015E-04	1000.	1.640E-03	1.593E-03	1000.	3.507E-03	3.404E-03
ESE	988.	988.	5.683E-04	5.523E-04	988.	1.367E-03	1.327E-03	988.	3.252E-03	3.156E-03
SE	1000.	1000.	5.447E-04	5.294E-04	1000.	1.273E-03	1.237E-03	1000.	3.167E-03	3.074E-03
SSE	792.	792.	6.340E-04	6.161E-04	792.	1.569E-03	1.524E-03	792.	4.277E-03	4.151E-03
S	841.	841.	4.874E-04	4.737E-04	841.	1.203E-03	1.168E-03	841.	3.049E-03	2.959E-03
SSW	853.	853.	4.667E-04	4.535E-04	853.	1.149E-03	1.116E-03	853.	2.974E-03	2.886E-03
SW	1024.	1024.	4.199E-04	4.081E-04	1024.	1.014E-03	9.852E-04	1024.	2.506E-03	2.432E-03
WSW	1170.	1170.	3.977E-04	3.865E-04	1170.	8.710E-04	8.460E-04	1170.	1.758E-03	1.706E-03
W	1756.	1756.	2.229E-04	2.166E-04	1756.	5.469E-04	5.312E-04	1756.	1.115E-03	1.082E-03
WNW	1219.	1219.	3.015E-04	2.930E-04	1219.	9.027E-04	8.767E-04	1219.	2.512E-03	2.438E-03
NW	756.	756.	6.013E-04	5.844E-04	756.	1.538E-03	1.494E-03	756.	3.871E-03	3.757E-03
NNW	671.	671.	7.735E-04	7.517E-04	671.	2.320E-03	2.253E-03	671.	6.461E-03	6.271E-03

DRESDEN SITE METEOROLOGICAL DATA 1/78 - 12/87

Table F-7 (Continued)

Maximum Offsite Finite Plume Gamma Dose Factors Based on 1 cm Depth at the Unrestricted Area Boundary for Ar-41

Downwind Direction	Unrestricted Area Bound (meters)	Elevated(Stack) Release Radius (meters)	S (mrad/yr)/(uCi/sec)	SBAR	Mixed Mode(Vent) Release Radius (meters)	V (mrad/yr)/(uCi/sec)	VBAR	Ground Level Release Radius (meters)	G (mrad/yr)/(uCi/sec)	GBAR
N	768.	768.	1.028E-03	9.954E-04	768.	3.199E-03	3.097E-03	768.	8.844E-03	8.561E-03
NNE	1207.	1207.	6.592E-04	6.381E-04	1207.	1.739E-03	1.683E-03	1207.	4.481E-03	4.337E-03
NE	1100.	1100.	6.501E-04	6.293E-04	1100.	1.740E-03	1.685E-03	1100.	4.797E-03	4.643E-03
ENE	1244.	1244.	5.257E-04	5.089E-04	1244.	1.111E-03	1.075E-03	1244.	2.509E-03	2.429E-03
E	1000.	1000.	7.666E-04	7.421E-04	1000.	2.262E-03	2.189E-03	1000.	5.647E-03	5.466E-03
ESE	988.	988.	7.013E-04	6.789E-04	988.	1.884E-03	1.824E-03	988.	5.348E-03	5.177E-03
SE	1000.	1000.	6.767E-04	6.550E-04	1000.	1.740E-03	1.684E-03	1000.	5.454E-03	5.280E-03
SSE	792.	792.	7.637E-04	7.393E-04	792.	2.092E-03	2.025E-03	792.	6.943E-03	6.721E-03
S	841.	841.	6.416E-04	6.210E-04	841.	1.652E-03	1.599E-03	841.	5.507E-03	5.331E-03
SSW	853.	853.	6.026E-04	5.833E-04	853.	1.580E-03	1.529E-03	853.	5.130E-03	4.966E-03
SW	1024.	1024.	5.432E-04	5.258E-04	1024.	1.475E-03	1.428E-03	1024.	4.583E-03	4.436E-03
WSW	1170.	1170.	5.286E-04	5.116E-04	1170.	1.293E-03	1.252E-03	1170.	3.310E-03	3.204E-03
W	1756.	1756.	3.346E-04	3.239E-04	1756.	9.098E-04	8.806E-04	1756.	2.358E-03	2.283E-03
WNW	1219.	1219.	4.009E-04	3.880E-04	1219.	1.327E-03	1.285E-03	1219.	4.769E-03	4.616E-03
NW	756.	756.	7.304E-04	7.070E-04	756.	2.057E-03	1.991E-03	756.	6.247E-03	6.047E-03
NNW	671.	671.	9.277E-04	8.980E-04	671.	2.986E-03	2.891E-03	671.	9.202E-03	8.907E-03

DRESDEN SITE METEOROLOGICAL DATA 1/78 - 12/87

Table F-7a

Maximum Offsite Finite Plume Gamma Dose Factors Based on 1 cm Depth at the Restricted Area Boundary for Kr-83m

Downwind Direction	Restricted Area Bound (meters)	Elevated(Stack) Release Radius (meters)	S (mrad/yr)/(uCi/sec)	SBAR	Mixed Mode(Vent) Release Radius (meters)	V (mrad/yr)/(uCi/sec)	VBAR	Ground Level Release Radius (meters)	G (mrad/yr)/(uCi/sec)	GBAR
N	466.	466.	1.041E-06	7.848E-07	466.	1.183E-04	8.920E-05	466.	7.750E-04	5.844E-04
NNE	698.	698.	1.121E-06	8.449E-07	698.	6.129E-05	4.621E-05	698.	3.913E-04	2.950E-04
NE	646.	646.	1.066E-06	8.037E-07	646.	6.013E-05	4.534E-05	646.	4.320E-04	3.257E-04
ENE	646.	646.	9.380E-07	7.072E-07	646.	3.998E-05	3.015E-05	646.	2.581E-04	1.946E-04
E	689.	689.	1.297E-06	9.782E-07	689.	6.576E-05	4.958E-05	689.	3.779E-04	2.849E-04
ESE	661.	661.	1.460E-06	1.101E-06	661.	5.746E-05	4.333E-05	661.	3.798E-04	2.864E-04
SE	664.	664.	1.647E-06	1.242E-06	664.	5.018E-05	3.784E-05	664.	3.997E-04	3.014E-04
SSE	744.	744.	1.560E-06	1.176E-06	744.	3.785E-05	2.854E-05	744.	3.091E-04	2.330E-04
S	814.	814.	1.112E-06	8.384E-07	814.	2.441E-05	1.841E-05	814.	2.240E-04	1.689E-04
SSW	789.	789.	1.040E-06	7.839E-07	789.	2.593E-05	1.955E-05	789.	2.244E-04	1.692E-04
SW	414.	414.	9.653E-07	7.278E-07	414.	6.443E-05	4.858E-05	414.	6.919E-04	5.217E-04
WSW	360.	360.	6.899E-07	5.202E-07	360.	6.746E-05	5.087E-05	360.	7.401E-04	5.581E-04
W	454.	454.	7.213E-07	5.439E-07	454.	7.089E-05	5.345E-05	454.	6.422E-04	4.842E-04
WNW	469.	469.	6.491E-07	4.894E-07	469.	8.073E-05	6.087E-05	469.	8.066E-04	6.082E-04
NW	482.	482.	7.323E-07	5.522E-07	482.	5.751E-05	4.336E-05	482.	5.123E-04	3.863E-04
NNW	466.	466.	7.395E-07	5.576E-07	466.	8.846E-05	6.670E-05	466.	6.690E-04	5.044E-04

DRESDEN SITE METEOROLOGICAL DATA 1/78 - 12/87

Note: Based on Reference 1 of Section F.2 and the formulas in Sections B.5 and B.6 of Appendix B.

Table F-7a (Continued)

Maximum Offsite Finite Plume Gamma Dose Factors Based on 1 cm Depth at the Restricted Area Boundary for Kr-85m

Downwind Direction	Restricted Area Bound (meters)	Elevated(Stack) Release Radius (meters)	S (mrad/yr)/(uCi/sec)	SBAR	Mixed Mode(Vent) Release Radius (meters)	V (mrad/yr)/(uCi/sec)	VBAR	Ground Level Release Radius (meters)	G (mrad/yr)/(uCi/sec)	GBAR
N	466.	466.	2.230E-04	2.158E-04	466.	1.067E-03	1.027E-03	466.	3.594E-03	3.437E-03
NNE	698.	698.	1.529E-04	1.479E-04	698.	6.163E-04	5.932E-04	698.	1.974E-03	1.889E-03
NE	646.	646.	1.478E-04	1.430E-04	646.	6.061E-04	5.834E-04	646.	2.111E-03	2.020E-03
ENE	646.	646.	1.333E-04	1.290E-04	646.	4.501E-04	4.335E-04	646.	1.321E-03	1.264E-03
E	689.	689.	1.498E-04	1.449E-04	689.	6.595E-04	6.348E-04	689.	1.981E-03	1.896E-03
ESE	661.	661.	1.424E-04	1.378E-04	661.	5.726E-04	5.511E-04	661.	1.959E-03	1.875E-03
SE	664.	664.	1.391E-04	1.346E-04	664.	5.279E-04	5.083E-04	664.	2.037E-03	1.950E-03
SSE	744.	744.	1.110E-04	1.074E-04	744.	4.191E-04	4.036E-04	744.	1.626E-03	1.556E-03
S	814.	814.	8.973E-05	8.679E-05	814.	3.161E-04	3.046E-04	814.	1.260E-03	1.207E-03
SSW	789.	789.	8.795E-05	8.508E-05	789.	3.199E-04	3.082E-04	789.	1.239E-03	1.187E-03
SW	414.	414.	1.735E-04	1.679E-04	414.	7.369E-04	7.098E-04	414.	3.258E-03	3.115E-03
WSW	360.	360.	2.168E-04	2.098E-04	360.	8.360E-04	8.055E-04	360.	3.347E-03	3.199E-03
W	454.	454.	1.616E-04	1.564E-04	454.	7.474E-04	7.196E-04	454.	3.018E-03	2.886E-03
WNW	469.	469.	1.329E-04	1.286E-04	469.	7.339E-04	7.061E-04	469.	3.639E-03	3.477E-03
NW	482.	482.	1.485E-04	1.437E-04	482.	6.336E-04	6.101E-04	482.	2.416E-03	2.311E-03
NNW	466.	466.	1.744E-04	1.688E-04	466.	8.433E-04	8.115E-04	466.	3.104E-03	2.968E-03

DRESDEN SITE METEOROLOGICAL DATA 1/78 - 12/87

Table F-7a (Continued)

Maximum Offsite Finite Plume Gamma Dose Factors Based on 1 cm Depth at the Restricted Area Boundary for Kr-85

Downwind Direction	Restricted Area Bound (meters)	Elevated(Stack) Release Radius (meters)	S (mrad/yr)/(uCi/sec)	SBAR	Mixed Mode(Vent) Release Radius (meters)	V (mrad/yr)/(uCi/sec)	VBAR	Ground Level Release Radius (meters)	G (mrad/yr)/(uCi/sec)	GBAR
N	466.	466.	3.143E-06	3.040E-06	466.	1.231E-05	1.190E-05	466.	3.902E-05	3.773E-05
NNE	698.	698.	2.122E-06	2.052E-06	698.	7.164E-06	6.928E-06	698.	2.157E-05	2.086E-05
NE	646.	646.	2.066E-06	1.998E-06	646.	7.095E-06	6.861E-06	646.	2.323E-05	2.247E-05
ENE	646.	646.	1.876E-06	1.814E-06	646.	5.302E-06	5.127E-06	646.	1.455E-05	1.407E-05
E	689.	689.	2.087E-06	2.018E-06	689.	7.673E-06	7.420E-06	689.	2.175E-05	2.103E-05
ESE	661.	661.	1.977E-06	1.912E-06	661.	6.666E-06	6.446E-06	661.	2.151E-05	2.080E-05
SE	664.	664.	1.932E-06	1.868E-06	664.	6.158E-06	5.955E-06	664.	2.246E-05	2.172E-05
SSE	744.	744.	1.539E-06	1.488E-06	744.	4.926E-06	4.763E-06	744.	1.802E-05	1.742E-05
S	814.	814.	1.279E-06	1.237E-06	814.	3.759E-06	3.635E-06	814.	1.416E-05	1.369E-05
SSW	789.	789.	1.247E-06	1.206E-06	789.	3.782E-06	3.657E-06	789.	1.382E-05	1.336E-05
SW	414.	414.	2.479E-06	2.397E-06	414.	8.698E-06	8.411E-06	414.	3.548E-05	3.430E-05
WSW	360.	360.	3.110E-06	3.008E-06	360.	9.874E-06	9.548E-06	360.	3.626E-05	3.506E-05
W	454.	454.	2.321E-06	2.244E-06	454.	8.737E-06	8.449E-06	454.	3.270E-05	3.163E-05
WNW	469.	469.	1.894E-06	1.832E-06	469.	8.519E-06	8.238E-06	469.	3.970E-05	3.839E-05
NW	482.	482.	2.110E-06	2.041E-06	482.	7.448E-06	7.202E-06	482.	2.638E-05	2.551E-05
NNW	466.	466.	2.476E-06	2.394E-06	466.	9.798E-06	9.474E-06	466.	3.357E-05	3.246E-05

DRESDEN SITE METEOROLOGICAL DATA 1/78 - 12/87

Table F-7a (Continued)

Maximum Offsite Finite Plume Gamma Dose Factors Based on 1 cm Depth at the Restricted Area Boundary for Kr-87

Downwind Direction	Restricted Area Bound (meters)	Elevated(Stack) Release Radius (meters)	S (mrad/yr)/(uCi/sec)	SBAR	Mixed Mode(Vent) Release Radius (meters)	V (mrad/yr)/(uCi/sec)	VBAR	Ground Level Release Radius (meters)	G (mrad/yr)/(uCi/sec)	GBAR
N	466.	466.	1.137E-03	1.105E-03	466.	3.687E-03	3.580E-03	466.	1.071E-02	1.040E-02
NNE	698.	698.	7.555E-04	7.340E-04	698.	2.123E-03	2.062E-03	698.	5.856E-03	5.686E-03
NE	646.	646.	7.405E-04	7.194E-04	646.	2.093E-03	2.033E-03	646.	6.143E-03	5.965E-03
ENE	646.	646.	6.748E-04	6.556E-04	646.	1.576E-03	1.530E-03	646.	3.888E-03	3.775E-03
E	689.	689.	7.454E-04	7.242E-04	689.	2.252E-03	2.187E-03	689.	5.844E-03	5.674E-03
ESE	661.	661.	7.052E-04	6.852E-04	661.	1.965E-03	1.908E-03	661.	5.772E-03	5.604E-03
SE	664.	664.	6.896E-04	6.700E-04	664.	1.837E-03	1.784E-03	664.	5.961E-03	5.788E-03
SSE	744.	744.	5.478E-04	5.322E-04	744.	1.458E-03	1.416E-03	744.	4.719E-03	4.582E-03
S	814.	814.	4.428E-04	4.302E-04	814.	1.107E-03	1.075E-03	814.	3.558E-03	3.454E-03
SSW	789.	789.	4.371E-04	4.247E-04	789.	1.115E-03	1.082E-03	789.	3.542E-03	3.439E-03
SW	414.	414.	9.088E-04	8.830E-04	414.	2.627E-03	2.551E-03	414.	9.591E-03	9.312E-03
WSW	360.	360.	1.151E-03	1.119E-03	360.	3.009E-03	2.922E-03	360.	9.936E-03	9.647E-03
W	454.	454.	8.516E-04	8.275E-04	454.	2.633E-03	2.557E-03	454.	8.998E-03	8.737E-03
WNW	469.	469.	6.945E-04	6.748E-04	469.	2.555E-03	2.481E-03	469.	1.066E-02	1.035E-02
NW	482.	482.	7.712E-04	7.493E-04	482.	2.229E-03	2.164E-03	482.	7.109E-03	6.902E-03
NNW	466.	466.	8.990E-04	8.735E-04	466.	2.932E-03	2.847E-03	466.	9.310E-03	9.039E-03

DRESDEN SITE METEOROLOGICAL DATA 1/78 - 12/87

Table F-7a (Continued)

Maximum Offsite Finite Plume Gamma Dose Factors Based on 1 cm Depth at the Restricted Area Boundary for Kr-88

Downwind Direction	Restricted Area Bound (meters)	Elevated(Stack) Release Radius (meters)	S (mrad/yr)/(uCi/sec)	SBAR	Mixed Mode(Vent) Release Radius (meters)	V (mrad/yr)/(uCi/sec)	VBAR	Ground Level Release Radius (meters)	G (mrad/yr)/(uCi/sec)	GBAR
N	466.	466.	2.943E-03	2.865E-03	466.	8.929E-03	8.681E-03	466.	2.587E-02	2.511E-02
NNE	698.	698.	1.947E-03	1.896E-03	698.	5.194E-03	5.050E-03	698.	1.425E-02	1.384E-02
NE	646.	646.	1.914E-03	1.864E-03	646.	5.149E-03	5.007E-03	646.	1.515E-02	1.471E-02
ENE	646.	646.	1.751E-03	1.705E-03	646.	3.883E-03	3.776E-03	646.	9.563E-03	9.287E-03
E	689.	689.	1.928E-03	1.877E-03	689.	5.527E-03	5.374E-03	689.	1.430E-02	1.389E-02
ESE	661.	661.	1.821E-03	1.772E-03	661.	4.821E-03	4.688E-03	661.	1.414E-02	1.373E-02
SE	664.	664.	1.783E-03	1.735E-03	664.	4.497E-03	4.373E-03	664.	1.470E-02	1.427E-02
SSE	744.	744.	1.419E-03	1.382E-03	744.	3.601E-03	3.502E-03	744.	1.172E-02	1.138E-02
S	814.	814.	1.180E-03	1.148E-03	814.	2.755E-03	2.679E-03	814.	9.025E-03	8.765E-03
SSW	789.	789.	1.155E-03	1.124E-03	789.	2.761E-03	2.685E-03	789.	8.882E-03	8.627E-03
SW	414.	414.	2.367E-03	2.304E-03	414.	6.449E-03	6.272E-03	414.	2.333E-02	2.265E-02
WSW	360.	360.	2.990E-03	2.911E-03	360.	7.340E-03	7.139E-03	360.	2.399E-02	2.329E-02
W	454.	454.	2.223E-03	2.164E-03	454.	6.415E-03	6.238E-03	454.	2.169E-02	2.106E-02
WNW	469.	469.	1.805E-03	1.757E-03	469.	6.215E-03	6.043E-03	469.	2.604E-02	2.528E-02
NW	482.	482.	2.001E-03	1.948E-03	482.	5.457E-03	5.307E-03	482.	1.734E-02	1.684E-02
NNW	466.	466.	2.333E-03	2.271E-03	466.	7.138E-03	6.941E-03	466.	2.236E-02	2.171E-02

DRESDEN SITE METEOROLOGICAL DATA 1/78 - 12/87

Table F-7a (Continued)

Maximum Offsite Finite Plume Gamma Dose Factors Based on 1 cm Depth at the Restricted Area Boundary for Kr-89

Downwind Direction	Restricted Area Bound (meters)	Elevated(Stack) Release Radius (meters)	S (mrad/yr)/(uCi/sec)	SBAR	Mixed Mode(Vent) Release Radius (meters)	V (mrad/yr)/(uCi/sec)	VBAR	Ground Level Release Radius (meters)	G (mrad/yr)/(uCi/sec)	GBAR
N	466.	466.	1.732E-03	1.683E-03	466.	5.035E-03	4.891E-03	466.	1.065E-02	1.034E-02
NNE	698.	698.	1.031E-03	1.002E-03	698.	2.286E-03	2.221E-03	698.	4.275E-03	4.153E-03
NE	646.	646.	9.950E-04	9.670E-04	646.	2.234E-03	2.170E-03	646.	4.298E-03	4.175E-03
ENE	646.	646.	8.600E-04	8.358E-04	646.	1.676E-03	1.628E-03	646.	2.825E-03	2.744E-03
E	689.	689.	9.705E-04	9.431E-04	689.	2.440E-03	2.370E-03	689.	4.482E-03	4.354E-03
ESE	661.	661.	9.455E-04	9.188E-04	661.	2.181E-03	2.119E-03	661.	4.358E-03	4.232E-03
SE	664.	664.	9.066E-04	8.810E-04	664.	2.023E-03	1.966E-03	664.	4.112E-03	3.994E-03
SSE	744.	744.	6.762E-04	6.571E-04	744.	1.429E-03	1.388E-03	744.	2.760E-03	2.680E-03
S	814.	814.	4.553E-04	4.425E-04	814.	9.592E-04	9.318E-04	814.	1.596E-03	1.550E-03
SSW	789.	789.	4.664E-04	4.533E-04	789.	9.763E-04	9.484E-04	789.	1.761E-03	1.710E-03
SW	414.	414.	1.343E-03	1.305E-03	414.	3.343E-03	3.248E-03	414.	8.556E-03	8.310E-03
WSW	360.	360.	1.768E-03	1.718E-03	360.	4.104E-03	3.987E-03	360.	9.909E-03	9.624E-03
W	454.	454.	1.187E-03	1.153E-03	454.	3.343E-03	3.247E-03	454.	8.490E-03	8.246E-03
WNW	469.	469.	9.873E-04	9.595E-04	469.	3.183E-03	3.092E-03	469.	9.119E-03	8.857E-03
NW	482.	482.	1.096E-03	1.065E-03	482.	2.722E-03	2.644E-03	482.	6.040E-03	5.867E-03
NNW	466.	466.	1.313E-03	1.276E-03	466.	3.815E-03	3.706E-03	466.	9.388E-03	9.118E-03

DRESDEN SITE METEOROLOGICAL DATA 1/78 - 12/87

Table F-7a (Continued)

Maximum Offsite Finite Plume Gamma Dose Factors Based on 1 cm Depth at the Restricted Area Boundary for Kr-90

Downwind Direction	Restricted Area Bound (meters)	Elevated(Stack) Release Radius (meters)	S (mrad/yr)/(uCi/sec)	SBAR	Mixed Mode(Vent) Release Radius (meters)	V (mrad/yr)/(uCi/sec)	VBAR	Ground Level Release Radius (meters)	G (mrad/yr)/(uCi/sec)	GBAR
N	466.	466.	5.929E-04	5.755E-04	466.	1.271E-03	1.233E-03	466.	1.613E-03	1.564E-03
NNE	698.	698.	2.234E-04	2.169E-04	698.	2.964E-04	2.875E-04	698.	3.053E-04	2.960E-04
NE	646.	646.	2.150E-04	2.087E-04	646.	2.886E-04	2.799E-04	646.	2.853E-04	2.766E-04
ENE	646.	646.	1.600E-04	1.553E-04	646.	2.232E-04	2.165E-04	646.	2.234E-04	2.166E-04
E	689.	689.	1.909E-04	1.853E-04	689.	3.262E-04	3.164E-04	689.	3.357E-04	3.255E-04
ESE	661.	661.	2.049E-04	1.989E-04	661.	3.190E-04	3.094E-04	661.	3.449E-04	3.344E-04
SE	664.	664.	1.732E-04	1.681E-04	664.	2.602E-04	2.524E-04	664.	2.762E-04	2.678E-04
SSE	744.	744.	1.077E-04	1.046E-04	744.	1.358E-04	1.317E-04	744.	1.195E-04	1.159E-04
S	814.	814.	5.360E-05	5.202E-05	814.	6.541E-05	6.345E-05	814.	4.998E-05	4.846E-05
SSW	789.	789.	5.864E-05	5.692E-05	789.	7.078E-05	6.866E-05	789.	5.185E-05	5.027E-05
SW	414.	414.	4.047E-04	3.929E-04	414.	7.044E-04	6.833E-04	414.	9.383E-04	9.096E-04
WSW	360.	360.	5.613E-04	5.449E-04	360.	9.253E-04	8.977E-04	360.	1.276E-03	1.237E-03
W	454.	454.	3.031E-04	2.943E-04	454.	6.126E-04	5.942E-04	454.	8.379E-04	8.123E-04
WNW	469.	469.	2.652E-04	2.574E-04	469.	5.427E-04	5.264E-04	469.	7.684E-04	7.449E-04
NW	482.	482.	2.739E-04	2.659E-04	482.	4.758E-04	4.616E-04	482.	6.150E-04	5.962E-04
NNW	466.	466.	3.808E-04	3.696E-04	466.	8.240E-04	7.992E-04	466.	1.215E-03	1.178E-03

DRESDEN SITE METEOROLOGICAL DATA 1/78 - 12/87

Table F-7a (Continued)

Maximum Offsite Finite Plume Gamma Dose Factors Based on 1 cm Depth at the Restricted Area Boundary for Xe-131m

Downwind Direction	Restricted Area Bound (meters)	Elevated(Stack) Release Radius (meters)	S (mrad/yr)/(uCi/sec)	SBAR	Mixed Mode(Vent) Release Radius (meters)	V (mrad/yr)/(uCi/sec)	VBAR	Ground Level Release Radius (meters)	G (mrad/yr)/(uCi/sec)	GBAR
N	466.	466.	5.556E-06	5.204E-06	466.	1.153E-04	9.164E-05	466.	6.984E-04	5.422E-04
NNE	698.	698.	4.133E-06	3.812E-06	698.	6.169E-05	4.926E-05	698.	3.589E-04	2.792E-04
NE	646.	646.	3.982E-06	3.675E-06	646.	6.105E-05	4.875E-05	646.	4.019E-04	3.123E-04
ENE	646.	646.	3.576E-06	3.303E-06	646.	4.173E-05	3.348E-05	646.	2.409E-04	1.874E-04
E	689.	689.	4.208E-06	3.855E-06	689.	6.680E-05	5.332E-05	689.	3.507E-04	2.731E-04
ESE	661.	661.	4.174E-06	3.795E-06	661.	5.779E-05	4.614E-05	661.	3.524E-04	2.743E-04
SE	664.	664.	4.252E-06	3.839E-06	664.	5.086E-05	4.070E-05	664.	3.743E-04	2.912E-04
SSE	744.	744.	3.590E-06	3.212E-06	744.	3.899E-05	3.128E-05	744.	2.939E-04	2.288E-04
S	814.	814.	2.813E-06	2.534E-06	814.	2.622E-05	2.120E-05	814.	2.202E-04	1.717E-04
SSW	789.	789.	2.708E-06	2.445E-06	789.	2.755E-05	2.221E-05	789.	2.178E-04	1.698E-04
SW	414.	414.	4.445E-06	4.141E-06	414.	6.611E-05	5.314E-05	414.	6.302E-04	4.894E-04
WSW	360.	360.	5.145E-06	4.865E-06	360.	7.064E-05	5.700E-05	360.	6.654E-04	5.162E-04
W	454.	454.	4.007E-06	3.758E-06	454.	7.148E-05	5.722E-05	454.	5.783E-04	4.492E-04
WNW	469.	469.	3.335E-06	3.119E-06	469.	7.894E-05	6.278E-05	469.	7.362E-04	5.710E-04
NW	482.	482.	3.732E-06	3.489E-06	482.	5.931E-05	4.756E-05	482.	4.685E-04	3.638E-04
NNW	466.	466.	4.291E-06	4.030E-06	466.	8.721E-05	6.951E-05	466.	5.987E-04	4.649E-04

DRESDEN SITE METEOROLOGICAL DATA 1/78 - 12/87

Table F-7a (Continued)

Maximum Offsite Finite Plume Gamma Dose Factors Based on 1 cm Depth at the Restricted Area Boundary for Xe-133m

Downwind Direction	Restricted Area Bound (meters)	Elevated(Stack) Release Radius (meters)	S (mrad/yr)/(uCi/sec)	SBAR	Mixed Mode(Vent) Release Radius (meters)	V (mrad/yr)/(uCi/sec)	VBAR	Ground Level Release Radius (meters)	G (mrad/yr)/(uCi/sec)	GBAR
N	466.	466.	3.241E-05	3.119E-05	466.	2.440E-04	2.155E-04	466.	1.136E-03	9.602E-04
NNE	698.	698.	2.256E-05	2.164E-05	698.	1.363E-04	1.211E-04	698.	5.998E-04	5.098E-04
NE	646.	646.	2.179E-05	2.091E-05	646.	1.346E-04	1.195E-04	646.	6.612E-04	5.604E-04
ENE	646.	646.	1.965E-05	1.886E-05	646.	9.633E-05	8.606E-05	646.	4.028E-04	3.424E-04
E	689.	689.	2.227E-05	2.133E-05	689.	1.468E-04	1.304E-04	689.	5.931E-04	5.052E-04
ESE	661.	661.	2.134E-05	2.040E-05	661.	1.272E-04	1.130E-04	661.	5.922E-04	5.039E-04
SE	664.	664.	2.103E-05	2.006E-05	664.	1.147E-04	1.022E-04	664.	6.244E-04	5.306E-04
SSE	744.	744.	1.699E-05	1.617E-05	744.	8.986E-05	8.027E-05	744.	4.942E-04	4.206E-04
S	814.	814.	1.376E-05	1.312E-05	814.	6.470E-05	5.828E-05	814.	3.771E-04	3.221E-04
SSW	789.	789.	1.340E-05	1.278E-05	789.	6.644E-05	5.969E-05	789.	3.712E-04	3.167E-04
SW	414.	414.	2.535E-05	2.437E-05	414.	1.552E-04	1.389E-04	414.	1.028E-03	8.695E-04
WSW	360.	360.	3.122E-05	3.010E-05	360.	1.715E-04	1.542E-04	360.	1.072E-03	9.053E-04
W	454.	454.	2.349E-05	2.262E-05	454.	1.617E-04	1.441E-04	454.	9.451E-04	7.998E-04
WNW	469.	469.	1.934E-05	1.860E-05	469.	1.676E-04	1.480E-04	469.	1.181E-03	9.961E-04
NW	482.	482.	2.161E-05	2.079E-05	482.	1.360E-04	1.214E-04	482.	7.638E-04	6.462E-04
NNW	466.	466.	2.531E-05	2.437E-05	466.	1.891E-04	1.675E-04	466.	9.753E-04	8.249E-04

DRESDEN SITE METEOROLOGICAL DATA 1/78 - 12/87

Table F-7a (Continued)

Maximum Offsite Finite Plume Gamma Dose Factors Based on 1 cm Depth at the Restricted Area Boundary for Xe-133

Downwind Direction	Restricted Area Bound (meters)	Elevated(Stack) Release Radius (meters)	S (mrad/yr)/(uCi/sec)	SBAR	Mixed Mode(Vent) Release Radius (meters)	V (mrad/yr)/(uCi/sec)	VBAR	Ground Level Release Radius (meters)	G (mrad/yr)/(uCi/sec)	GBAR
N	466.	466.	2.838E-05	2.749E-05	466.	2.710E-04	2.466E-04	466.	1.235E-03	1.086E-03
NNE	698.	698.	2.043E-05	1.974E-05	698.	1.526E-04	1.395E-04	698.	6.600E-04	5.834E-04
NE	646.	646.	1.949E-05	1.883E-05	646.	1.497E-04	1.367E-04	646.	7.232E-04	6.376E-04
ENE	646.	646.	1.742E-05	1.683E-05	646.	1.075E-04	9.865E-05	646.	4.427E-04	3.913E-04
E	689.	689.	2.012E-05	1.941E-05	689.	1.647E-04	1.505E-04	689.	6.559E-04	5.810E-04
ESE	661.	661.	1.945E-05	1.873E-05	661.	1.424E-04	1.302E-04	661.	6.530E-04	5.778E-04
SE	664.	664.	1.923E-05	1.848E-05	664.	1.285E-04	1.178E-04	664.	6.863E-04	6.064E-04
SSE	744.	744.	1.569E-05	1.505E-05	744.	1.006E-04	9.237E-05	744.	5.450E-04	4.823E-04
S	814.	814.	1.234E-05	1.186E-05	814.	7.264E-05	6.710E-05	814.	4.196E-04	3.726E-04
SSW	789.	789.	1.201E-05	1.154E-05	789.	7.469E-05	6.887E-05	789.	4.123E-04	3.658E-04
SW	414.	414.	2.175E-05	2.105E-05	414.	1.717E-04	1.578E-04	414.	1.121E-03	9.870E-04
WSW	360.	360.	2.634E-05	2.555E-05	360.	1.899E-04	1.750E-04	360.	1.163E-03	1.021E-03
W	454.	454.	1.994E-05	1.931E-05	454.	1.796E-04	1.645E-04	454.	1.031E-03	9.079E-04
WNW	469.	469.	1.660E-05	1.607E-05	469.	1.849E-04	1.682E-04	469.	1.278E-03	1.121E-03
NW	482.	482.	1.863E-05	1.804E-05	482.	1.512E-04	1.386E-04	482.	8.321E-04	7.323E-04
NNW	466.	466.	2.185E-05	2.118E-05	466.	2.096E-04	1.912E-04	466.	1.062E-03	9.343E-04

DRESDEN SITE METEOROLOGICAL DATA 1/78 - 12/87

Table F-7a (Continued)

Maximum Offsite Finite Plume Gamma Dose Factors Based on 1 cm Depth at the Restricted Area Boundary for Xe-135m

Downwind Direction	Restricted Area Bound (meters)	Elevated(Stack) Release Radius (meters)	S (mrad/yr)/(uCi/sec)	SBAR	Mixed Mode(Vent) Release Radius (meters)	V (mrad/yr)/(uCi/sec)	VBAR	Ground Level Release Radius (meters)	G (mrad/yr)/(uCi/sec)	GBAR
N	466.	466.	5.476E-04	5.295E-04	466.	2.124E-03	2.049E-03	466.	5.997E-03	5.773E-03
NNE	698.	698.	3.634E-04	3.514E-04	698.	1.154E-03	1.114E-03	698.	3.094E-03	2.980E-03
NE	646.	646.	3.525E-04	3.408E-04	646.	1.121E-03	1.082E-03	646.	3.110E-03	2.995E-03
ENE	646.	646.	3.159E-04	3.054E-04	646.	8.372E-04	8.082E-04	646.	1.987E-03	1.914E-03
E	689.	689.	3.536E-04	3.419E-04	689.	1.215E-03	1.173E-03	689.	3.060E-03	2.947E-03
ESE	661.	661.	3.372E-04	3.260E-04	661.	1.065E-03	1.028E-03	661.	2.999E-03	2.888E-03
SE	664.	664.	3.282E-04	3.173E-04	664.	1.001E-03	9.660E-04	664.	3.007E-03	2.896E-03
SSE	744.	744.	2.572E-04	2.486E-04	744.	7.657E-04	7.391E-04	744.	2.290E-03	2.206E-03
S	814.	814.	1.908E-04	1.844E-04	814.	5.608E-04	5.414E-04	814.	1.566E-03	1.509E-03
SSW	789.	789.	1.925E-04	1.861E-04	789.	5.709E-04	5.512E-04	789.	1.643E-03	1.583E-03
SW	414.	414.	4.279E-04	4.137E-04	414.	1.445E-03	1.395E-03	414.	5.165E-03	4.973E-03
WSW	360.	360.	5.484E-04	5.302E-04	360.	1.692E-03	1.634E-03	360.	5.561E-03	5.353E-03
W	454.	454.	3.953E-04	3.822E-04	454.	1.478E-03	1.426E-03	454.	5.053E-03	4.865E-03
WNW	469.	469.	3.274E-04	3.166E-04	469.	1.441E-03	1.390E-03	469.	5.671E-03	5.459E-03
NW	482.	482.	3.651E-04	3.530E-04	482.	1.223E-03	1.180E-03	482.	3.781E-03	3.640E-03
NNW	466.	466.	4.270E-04	4.129E-04	466.	1.655E-03	1.597E-03	466.	5.333E-03	5.134E-03

DRESDEN SITE METEOROLOGICAL DATA 1/78 - 12/87

Table F-7a (Continued)

Maximum Offsite Finite Plume Gamma Dose Factors Based on 1 cm Depth at the Restricted Area Boundary for Xe-135

Downwind Direction	Restricted Area Bound (meters)	Elevated(Stack) Release Radius (meters)	S (mrad/yr)/(uCi/sec)	SBAR	Mixed Mode(Vent) Release Radius (meters)	V (mrad/yr)/(uCi/sec)	VBAR	Ground Level Release Radius (meters)	G (mrad/yr)/(uCi/sec)	GBAR
N	466.	466.	3.150E-04	3.049E-04	466.	1.457E-03	1.408E-03	466.	4.806E-03	4.640E-03
NNE	698.	698.	2.157E-04	2.087E-04	698.	8.450E-04	8.169E-04	698.	2.654E-03	2.563E-03
NE	646.	646.	2.086E-04	2.019E-04	646.	8.323E-04	8.046E-04	646.	2.845E-03	2.747E-03
ENE	646.	646.	1.883E-04	1.822E-04	646.	6.195E-04	5.990E-04	646.	1.781E-03	1.720E-03
E	689.	689.	2.114E-04	2.046E-04	689.	9.053E-04	8.752E-04	689.	2.671E-03	2.580E-03
ESE	661.	661.	2.008E-04	1.943E-04	661.	7.856E-04	7.595E-04	661.	2.641E-03	2.550E-03
SE	664.	664.	1.961E-04	1.898E-04	664.	7.244E-04	7.004E-04	664.	2.749E-03	2.655E-03
SSE	744.	744.	1.565E-04	1.515E-04	744.	5.768E-04	5.577E-04	744.	2.201E-03	2.126E-03
S	814.	814.	1.274E-04	1.233E-04	814.	4.371E-04	4.227E-04	814.	1.721E-03	1.662E-03
SSW	789.	789.	1.246E-04	1.206E-04	789.	4.416E-04	4.270E-04	789.	1.685E-03	1.628E-03
SW	414.	414.	2.453E-04	2.375E-04	414.	1.013E-03	9.796E-04	414.	4.367E-03	4.216E-03
WSW	360.	360.	3.066E-04	2.967E-04	360.	1.150E-03	1.112E-03	360.	4.470E-03	4.315E-03
W	454.	454.	2.288E-04	2.214E-04	454.	1.025E-03	9.907E-04	454.	4.035E-03	3.896E-03
WNW	469.	469.	1.879E-04	1.818E-04	469.	1.003E-03	9.694E-04	469.	4.873E-03	4.704E-03
NW	482.	482.	2.099E-04	2.031E-04	482.	8.706E-04	8.418E-04	482.	3.242E-03	3.130E-03
NNW	466.	466.	2.466E-04	2.387E-04	466.	1.154E-03	1.115E-03	466.	4.144E-03	4.001E-03

DRESDEN SITE METEOROLOGICAL DATA 1/78 - 12/87

Table F-7a (Continued)

Maximum Offsite Finite Plume Gamma Dose Factors Based on 1 cm Depth at the Restricted Area Boundary for Xe-137

Downwind Direction	Restricted Area Bound (meters)	Elevated(Stack) Release Radius (meters)	S (mrad/yr)/(uCi/sec)	SBAR	Mixed Mode(Vent) Release Radius (meters)	V (mrad/yr)/(uCi/sec)	VBAR	Ground Level Release Radius (meters)	G (mrad/yr)/(uCi/sec)	GBAR
N	466.	466.	2.127E-04	2.059E-04	466.	7.271E-04	7.036E-04	466.	1.667E-03	1.613E-03
NNE	698.	698.	1.306E-04	1.264E-04	698.	3.407E-04	3.298E-04	698.	7.018E-04	6.790E-04
NE	646.	646.	1.257E-04	1.217E-04	646.	3.320E-04	3.212E-04	646.	7.049E-04	6.821E-04
ENE	646.	646.	1.091E-04	1.056E-04	646.	2.481E-04	2.401E-04	646.	4.587E-04	4.439E-04
E	689.	689.	1.235E-04	1.196E-04	689.	3.634E-04	3.517E-04	689.	7.273E-04	7.037E-04
ESE	661.	661.	1.199E-04	1.161E-04	661.	3.234E-04	3.130E-04	661.	7.065E-04	6.836E-04
SE	664.	664.	1.152E-04	1.116E-04	664.	3.001E-04	2.904E-04	664.	6.732E-04	6.514E-04
SSE	744.	744.	8.688E-05	8.410E-05	744.	2.147E-04	2.078E-04	744.	4.630E-04	4.480E-04
S	814.	814.	5.937E-05	5.747E-05	814.	1.464E-04	1.416E-04	814.	2.744E-04	2.655E-04
SSW	789.	789.	6.060E-05	5.866E-05	789.	1.492E-04	1.444E-04	789.	3.031E-04	2.933E-04
SW	414.	414.	1.639E-04	1.586E-04	414.	4.811E-04	4.656E-04	414.	1.355E-03	1.311E-03
WSW	360.	360.	2.140E-04	2.072E-04	360.	5.836E-04	5.648E-04	360.	1.551E-03	1.500E-03
W	454.	454.	1.459E-04	1.412E-04	454.	4.851E-04	4.694E-04	454.	1.350E-03	1.306E-03
WNW	469.	469.	1.216E-04	1.177E-04	469.	4.653E-04	4.503E-04	469.	1.456E-03	1.409E-03
NW	482.	482.	1.353E-04	1.310E-04	482.	3.948E-04	3.821E-04	482.	9.630E-04	9.318E-04
NNW	466.	466.	1.616E-04	1.564E-04	466.	5.529E-04	5.350E-04	466.	1.478E-03	1.430E-03

DRESDEN SITE METEOROLOGICAL DATA 1/78 - 12/87

Table F-7a (Continued)

Maximum Offsite Finite Plume Gamma Dose Factors Based on 1 cm Depth at the Restricted Area Boundary for Xe-138

Downwind Direction	Restricted Area Bound (meters)	Elevated(Stack) Release Radius (meters)	S (mrad/yr)/(uCi/sec)	SBAR	Mixed Mode(Vent) Release Radius (meters)	V (mrad/yr)/(uCi/sec)	VBAR	Ground Level Release Radius (meters)	G (mrad/yr)/(uCi/sec)	GBAR
N	466.	466.	1.468E-03	1.426E-03	466.	4.715E-03	4.578E-03	466.	1.246E-02	1.209E-02
NNE	698.	698.	9.601E-04	9.331E-04	698.	2.564E-03	2.490E-03	698.	6.418E-03	6.229E-03
NE	646.	646.	9.374E-04	9.110E-04	646.	2.497E-03	2.425E-03	646.	6.435E-03	6.245E-03
ENE	646.	646.	8.443E-04	8.205E-04	646.	1.879E-03	1.825E-03	646.	4.133E-03	4.011E-03
E	689.	689.	9.378E-04	9.114E-04	689.	2.697E-03	2.619E-03	689.	6.357E-03	6.169E-03
ESE	661.	661.	8.926E-04	8.675E-04	661.	2.364E-03	2.296E-03	661.	6.229E-03	6.045E-03
SE	664.	664.	8.697E-04	8.452E-04	664.	2.234E-03	2.169E-03	664.	6.239E-03	6.055E-03
SSE	744.	744.	6.807E-04	6.615E-04	744.	1.712E-03	1.663E-03	744.	4.744E-03	4.604E-03
S	814.	814.	5.066E-04	4.923E-04	814.	1.258E-03	1.222E-03	814.	3.226E-03	3.132E-03
SSW	789.	789.	5.116E-04	4.972E-04	789.	1.277E-03	1.240E-03	789.	3.392E-03	3.292E-03
SW	414.	414.	1.162E-03	1.130E-03	414.	3.252E-03	3.158E-03	414.	1.069E-02	1.037E-02
WSW	360.	360.	1.499E-03	1.456E-03	360.	3.830E-03	3.720E-03	360.	1.153E-02	1.118E-02
W	454.	454.	1.077E-03	1.047E-03	454.	3.311E-03	3.215E-03	454.	1.049E-02	1.018E-02
WNW	469.	469.	8.887E-04	8.637E-04	469.	3.209E-03	3.117E-03	469.	1.173E-02	1.138E-02
NW	482.	482.	9.879E-04	9.601E-04	482.	2.746E-03	2.666E-03	482.	7.834E-03	7.602E-03
NNW	466.	466.	1.151E-03	1.118E-03	466.	3.684E-03	3.578E-03	466.	1.109E-02	1.076E-02

DRESDEN SITE METEOROLOGICAL DATA 1/78 - 12/87

Table F-7a (Continued)

Maximum Offsite Finite Plume Gamma Dose Factors Based on 1 cm Depth at the Restricted Area Boundary for Ar-41

Downwind Direction	Restricted Area Bound (meters)	Elevated(Stack) Release Radius (meters)	S (mrad/yr)/(uCi/sec)	SBAR	Mixed Mode(Vent) Release Radius (meters)	V (mrad/yr)/(uCi/sec)	VBAR	Ground Level Release Radius (meters)	G (mrad/yr)/(uCi/sec)	GBAR
N	466.	466.	1.683E-03	1.629E-03	466.	5.680E-03	5.499E-03	466.	1.694E-02	1.640E-02
NNE	698.	698.	1.121E-03	1.085E-03	698.	3.281E-03	3.176E-03	698.	9.289E-03	8.992E-03
NE	646.	646.	1.097E-03	1.062E-03	646.	3.240E-03	3.136E-03	646.	9.820E-03	9.505E-03
ENE	646.	646.	9.994E-04	9.674E-04	646.	2.434E-03	2.356E-03	646.	6.194E-03	5.996E-03
E	689.	689.	1.105E-03	1.070E-03	689.	3.488E-03	3.377E-03	689.	9.290E-03	8.992E-03
ESE	661.	661.	1.046E-03	1.012E-03	661.	3.041E-03	2.944E-03	661.	9.182E-03	8.888E-03
SE	664.	664.	1.022E-03	9.898E-04	664.	2.834E-03	2.744E-03	664.	9.514E-03	9.210E-03
SSE	744.	744.	8.133E-04	7.873E-04	744.	2.256E-03	2.184E-03	744.	7.558E-03	7.316E-03
S	814.	814.	6.637E-04	6.424E-04	814.	1.716E-03	1.661E-03	814.	5.761E-03	5.577E-03
SSW	789.	789.	6.528E-04	6.319E-04	789.	1.728E-03	1.673E-03	789.	5.704E-03	5.521E-03
SW	414.	414.	1.342E-03	1.299E-03	414.	4.046E-03	3.917E-03	414.	1.524E-02	1.475E-02
WSW	360.	360.	1.694E-03	1.640E-03	360.	4.622E-03	4.474E-03	360.	1.573E-02	1.523E-02
W	454.	454.	1.257E-03	1.217E-03	454.	4.055E-03	3.926E-03	454.	1.422E-02	1.377E-02
WNW	469.	469.	1.025E-03	9.921E-04	469.	3.940E-03	3.814E-03	469.	1.699E-02	1.644E-02
NW	482.	482.	1.138E-03	1.102E-03	482.	3.437E-03	3.327E-03	482.	1.131E-02	1.095E-02
NNW	466.	466.	1.329E-03	1.287E-03	466.	4.522E-03	4.377E-03	466.	1.469E-02	1.422E-02

DRESDEN SITE METEOROLOGICAL DATA 1/78 - 12/87

Table F-8
Parameters for Calculations of N-16 Skyshine Radiation From Dresden 2/3

Location Number k	Activity	Occupancy Hours OH_k[a]	Occupancy Factor OF_k	Shielding Factor SF_k	Distance R_k (m)
1	Living at home (nearest resident)	8344	0.95	0.7	800[b]
2	Fishing	416	0.05	1.0	610[c]

M_h = 5
K = 3.60E-05 mrem/(MWe-hr)

These parameters are used to obtain an initial estimate of skyshine dose to the maximally exposed member of the public using Equation A-34 in Appendix A. If desired, more realistic parameters could be used in place of these to refine the estimate. For example, one could determine whether the nearest resident really fishes the specified number of hours at the specified location.

[a] The amount of time in a year that a maximally exposed fisherman would spend fishing near the site is estimated as 12 hours per week for 8 months per year. This yields an estimate of:

[12 hours/week] [(8 months/yr)/(12 months/yr)] x [52 weeks/yr] = 416 hours/yr

The remaining time is assumed to be spent at the nearest residence.

[b] Distance to nearest residence (See Table F-3).

[c] Estimated from a drawing of the site.

[d] The OF_k is the quotient of the number of hours a location is occupied and the number of hours in a year. Thus OH_k/8760 hours = OF_k rounded to the 0.01 digit.

Supplemental Table A

Elevated Level Joint Frequency Distribution Table Summary

300 Foot Elevation Data

Summary Table of Percent by Direction and Class

Class	N	NNE	NE	ENE	E	ESE	SE	SSE	S	SSW	SW	WSW	W	WNW	NW	NNW	Total
A	.237	.222	.188	.164	.115	.096	.105	.102	.152	.146	.167	.131	.207	.314	.367	.344	3.057
B	.206	.200	.176	.155	.123	.146	.151	.162	.252	.263	.241	.209	.256	.285	.287	.311	3.422
C	.289	.246	.260	.236	.225	.194	.240	.268	.338	.441	.350	.362	.515	.475	.469	.462	5.368
D	2.028	1.971	2.457	2.687	2.343	1.689	1.747	2.186	3.098	3.087	2.485	2.307	3.602	3.350	2.953	2.887	40.876
E	1.342	1.352	1.520	1.778	1.954	1.906	1.965	2.433	3.771	3.815	2.856	1.904	2.374	2.231	2.033	1.550	34.782
F	.494	.476	.397	.244	.257	.463	.777	.745	.816	.938	1.089	1.076	.793	.587	.644	.450	10.246
G	.146	.141	.083	.039	.034	.026	.112	.156	.128	.189	.288	.275	.256	.135	.125	.117	2.250
Total	4.742	4.607	5.080	5.304	5.050	4.520	5.098	6.052	8.554	8.879	7.475	6.263	8.002	7.376	6.878	6.119	100.000

Summary Table of Percent by Direction and Speed

Speed	N	NNE	NE	ENE	E	ESE	SE	SSE	S	SSW	SW	WSW	W	WNW	NW	NNW	Total
.45	.033	.021	.017	.006	.007	.000	.000	.007	.010	.000	.000	.000	.006	.000	.000	.000	.109
1.05	.035	.035	.031	.051	.052	.037	.035	.026	.043	.033	.031	.035	.027	.026	.033	.034	.565
2.05	.240	.209	.213	.244	.265	.223	.216	.220	.221	.171	.235	.249	.223	.240	.229	.210	3.608
3.05	.413	.474	.462	.559	.536	.481	.484	.474	.482	.413	.496	.575	.596	.433	.416	.416	7.710
4.05	.652	.572	.744	.896	.759	.520	.700	.726	.749	.620	.647	.754	.771	.627	.678	.608	11.024
5.05	.638	.640	.751	1.062	.785	.563	.778	.797	.771	.794	.729	.724	.840	.692	.847	.739	12.151
6.05	.710	.605	.853	.940	.818	.654	.762	.829	.974	1.065	.913	.869	1.050	.912	1.017	.862	13.834
8.05	1.133	1.167	1.237	1.078	1.077	1.192	1.375	1.555	2.228	2.493	2.202	1.632	1.994	2.028	2.036	1.828	26.254
10.05	.559	.552	.554	.386	.508	.506	.515	.850	1.612	1.793	1.286	.848	1.253	1.396	1.082	.924	14.623
13.05	.252	.269	.174	.072	.221	.311	.194	.449	1.140	1.189	.761	.415	.887	.780	.476	.385	7.972
18.00	.074	.064	.046	.008	.021	.033	.038	.117	.305	.293	.159	.148	.326	.214	.063	.110	2.017
99.00	.004	.000	.000	.000	.000	.001	.000	.001	.020	.014	.017	.015	.028	.028	.001	.002	.132
Total	4.742	4.607	5.080	5.304	5.050	4.520	5.098	6.052	8.554	8.879	7.475	6.263	8.002	7.376	6.878	6.119	100.000

NOTE: Wind directions in tables are presented in "wind from" and not "wind to" direction.

Supplemental Table A -Continued

Elevated Level Joint Frequency Distribution Table Summary

300 Foot Elevation Data

Summary Table of Percent by Speed and Class

Class Speed	A	B	C	D	E	F	G
.45	.000	.000	.001	.019	.041	.033	.014
1.05	.005	.008	.026	.188	.203	.107	.027
2.05	.078	.132	.229	1.618	.979	.454	.118
3.05	.279	.358	.624	3.471	1.971	.744	.263
4.05	.502	.572	.830	4.500	3.159	1.166	.295
5.05	.465	.513	.730	4.832	4.013	1.287	.311
6.05	.464	.487	.683	5.529	4.808	1.541	.322
8.05	.687	.768	1.127	9.927	9.863	3.289	.593
10.05	.331	.353	.627	5.846	5.844	1.371	.250
13.05	.222	.202	.370	3.766	3.118	.240	.054
18.00	.024	.030	.115	1.115	.720	.013	.001
99.00	.000	.000	.007	.065	.060	.000	.000

Supplemental Table B

Mixed Mode Joint Frequency Distribution Table Summaries

150 Foot Elevation Data

Summary Table of Percent by Direction and Class

Class	N	NNE	NE	ENE	E	ESE	SE	SSE	S	SSW	SW	WSW	W	WNW	NW	NNW	Total
A	.609	.428	.323	.250	.369	.452	.457	.508	.703	.775	.741	.777	.698	.809	.949	.972	9.821
B	.096	.098	.107	.086	.104	.129	.110	.157	.157	.192	.163	.184	.193	.143	.144	.146	2.210
C	.125	.116	.125	.121	.112	.130	.102	.127	.163	.200	.162	.121	.198	.177	.165	.150	2.295
D	1.083	.984	1.267	1.306	1.295	.929	.875	1.120	1.395	1.253	.982	.897	1.489	1.173	1.335	1.316	18.699
E	1.434	1.483	1.944	2.233	2.262	2.055	1.655	2.545	3.353	2.529	1.988	1.218	2.653	2.113	2.091	1.702	33.259
F	.446	.434	.397	.301	.451	.687	.867	.643	1.036	1.224	1.167	.609	.864	.699	.539	.417	10.781
G	.200	.123	.094	.084	.069	.105	.366	.230	.187	.269	.557	.633	.318	.207	.208	.167	3.816
Total	3.993	3.665	4.256	4.381	4.662	4.488	4.433	5.332	6.995	6.441	5.760	4.440	6.413	5.322	5.430	4.870	80.882

Summary Table of Percent by Direction and Speed

Speed	N	NNE	NE	ENE	E	ESE	SE	SSE	S	SSW	SW	WSW	W	WNW	NW	NNW	Total
.45	.018	.007	.051	.007	.006	.004	.006	.018	.005	.007	.017	.006	.007	.017	.006	.016	.198
1.05	.051	.070	.064	.060	.057	.056	.049	.056	.047	.062	.053	.058	.067	.060	.058	.064	.934
2.05	.361	.306	.365	.421	.392	.371	.340	.315	.397	.349	.380	.388	.432	.347	.339	.324	5.828
3.05	.664	.674	.698	.841	.796	.687	.763	.758	.789	.708	.763	.713	.738	.593	.614	.579	11.379
4.05	.799	.731	.854	1.101	1.045	.877	.943	.990	1.074	1.024	.922	.757	.972	.790	.847	.891	14.617
5.05	.803	.649	.799	.958	.993	1.025	.984	1.109	1.238	1.225	1.126	.862	1.146	.910	1.086	1.024	15.937
6.05	.514	.475	.591	.504	.582	.685	.650	.788	1.151	1.084	.937	.584	.998	.849	.906	.761	12.060
8.05	.609	.549	.672	.429	.598	.609	.534	.939	1.646	1.404	1.175	.809	1.436	1.219	1.161	.938	14.726
10.05	.157	.180	.151	.057	.175	.161	.151	.328	.565	.518	.345	.232	.556	.481	.382	.246	4.685
13.05	.015	.024	.012	.003	.018	.014	.012	.031	.084	.061	.040	.030	.061	.056	.032	.027	.519
18.00	.000	.000	.000	.000	.000	.000	.000	.000	.000	.000	.000	.000	.000	.000	.000	.000	.000
99.00	.000	.000	.000	.000	.000	.000	.000	.000	.000	.000	.000	.000	.000	.000	.000	.000	.000
Total	3.993	3.665	4.256	4.381	4.662	4.488	4.433	5.332	6.995	6.441	5.760	4.440	6.413	5.322	5.430	4.870	80.882

NOTE: Wind directions in tables are presented in "wind from" and not "wind to" direction.

In order to determine the final mixed mode values, 80.882% of the elevated value (presented in the 250 FT Mixed Mode table) and 19.118% of the ground level value (presented in the 30 FT Mixed Mode table) are used to calculate the final values.

Supplemental Table B - Continued

Mixed Mode Joint Frequency Distribution Table Summaries

150 Foot Elevation Data

Summary Table of Percent by Speed and Class

Class Speed	A	B	C	D	E	F	G
.45	.006	.001	.000	.023	.075	.042	.050
1.05	.029	.008	.016	.170	.315	.227	.168
2.05	.616	.180	.206	1.247	1.986	.952	.640
3.05	1.657	.385	.309	2.341	4.046	1.830	.811
4.05	1.968	.404	.379	2.832	5.796	2.433	.806
5.05	1.618	.384	.416	3.451	6.745	2.558	.765
6.05	1.363	.289	.300	2.823	5.242	1.621	.421
8.05	1.866	.405	.480	4.055	6.729	1.038	.153
10.05	.623	.138	.166	1.573	2.108	.076	.001
13.05	.075	.016	.023	.184	.217	.004	.000
18.00	.000	.000	.000	.000	.000	.000	.000
99.00	.000	.000	.000	.000	.000	.000	.000

Supplemental Table B - Continued

Mixed Mode Joint Frequency Distribution Table Summaries

35 Foot Elevation Data

Summary Table of Percent by Direction and Class

Class	N	NNE	NE	ENE	E	ESE	SE	SSE	S	SSW	SW	WSW	W	WNW	NW	NNW	Total
A	.090	.090	.064	.038	.051	.064	.066	.093	.205	.246	.208	.171	.187	.243	.224	.180	2.219
B	.019	.017	.019	.010	.014	.015	.014	.029	.047	.065	.036	.044	.068	.062	.039	.029	.528
C	.022	.022	.023	.012	.016	.019	.013	.033	.060	.077	.040	.040	.064	.086	.057	.045	.632
D	.286	.274	.251	.181	.274	.191	.176	.339	.577	.455	.308	.309	.573	.513	.416	.394	5.517
E	.295	.318	.345	.293	.481	.444	.372	.726	1.028	.719	.473	.371	.907	.736	.537	.387	8.433
F	.035	.041	.027	.014	.054	.138	.086	.123	.159	.164	.161	.077	.128	.089	.063	.061	1.420
G	.005	.002	.005	.001	.009	.055	.016	.013	.033	.054	.079	.022	.017	.016	.023	.018	.369
Total	.752	.764	.734	.550	.899	.927	.743	1.357	2.109	1.780	1.305	1.034	1.944	1.746	1.359	1.115	19.118

Summary Table of Percent by Direction and Speed

Speed	N	NNE	NE	ENE	E	ESE	SE	SSE	S	SSW	SW	WSW	W	WNW	NW	NNW	Total
.45	.000	.001	.000	.001	.000	.000	.004	.000	.000	.000	.003	.003	.007	.003	.000	.000	.023
1.05	.004	.002	.002	.002	.002	.001	.003	.006	.008	.011	.007	.004	.004	.005	.004	.004	.069
2.05	.053	.064	.047	.037	.057	.076	.037	.060	.078	.098	.081	.040	.064	.057	.069	.068	.985
3.05	.128	.145	.156	.162	.203	.261	.122	.175	.189	.178	.184	.095	.202	.182	.162	.181	2.727
4.05	.152	.142	.200	.161	.192	.193	.163	.238	.251	.213	.189	.146	.273	.220	.233	.210	3.176
5.05	.107	.098	.117	.096	.122	.117	.112	.176	.220	.179	.157	.130	.229	.216	.199	.151	2.425
6.05	.105	.080	.090	.041	.098	.086	.076	.150	.203	.208	.138	.123	.228	.201	.181	.125	2.133
8.05	.159	.196	.104	.040	.190	.133	.151	.332	.549	.459	.309	.244	.587	.528	.372	.240	4.592
10.05	.037	.034	.016	.010	.031	.049	.062	.166	.422	.336	.167	.141	.226	.247	.109	.117	2.170
13.05	.008	.000	.002	.000	.003	.009	.013	.050	.173	.087	.064	.091	.107	.076	.029	.019	.733
18.00	.000	.000	.000	.000	.000	.000	.000	.004	.016	.012	.006	.018	.014	.012	.001	.000	.082
99.00	.000	.000	.000	.000	.000	.000	.000	.000	.000	.000	.000	.000	.001	.000	.000	.000	.001
Total	.752	.764	.734	.550	.899	.927	.743	1.357	2.109	1.780	1.305	1.034	1.944	1.746	1.359	1.115	19.118

NOTE: Wind directions in tables are presented in "wind from" and not "wind to" direction.

Supplemental Table B - Continued

Mixed Mode Joint Frequency Distribution Table Summaries

35 Foot Elevation Data

Summary Table of Percent by Speed and Class

Class Speed	A	B	C	D	E	F	G
.45	.000	.000	.000	.007	.007	.003	.005
1.05	.000	.000	.000	.007	.013	.027	.022
2.05	.007	.006	.005	.064	.379	.369	.156
3.05	.198	.045	.047	.474	1.240	.573	.150
4.05	.363	.078	.089	.825	1.490	.298	.033
5.05	.349	.076	.084	.712	1.124	.078	.002
6.05	.305	.067	.079	.693	.956	.033	.000
8.05	.601	.147	.181	1.630	1.998	.036	.000
10.05	.304	.085	.109	.789	.881	.002	.000
13.05	.090	.022	.033	.271	.318	.000	.000
18.00	.001	.004	.005	.044	.028	.000	.000
99.00	.000	.000	.000	.001	.000	.000	.000

Supplemental Table C

Ground Level Joint Frequency Distribution Table Summary

DRESDEN JFD 1978-1987 GROUND LEVEL (35 FT)

Summary Table of Percent by Direction and Class

Class	N	NNE	NE	ENE	E	ESE	SE	SSE	S	SSW	SW	WSW	W	WNW	NW	NNW	Total
A	.688	.524	.386	.304	.405	.510	.547	.580	.888	1.027	.915	.946	.913	1.070	1.259	1.093	12.055
B	.129	.119	.126	.094	.122	.140	.121	.187	.216	.255	.168	.237	.249	.224	.195	.152	2.733
C	.146	.138	.143	.127	.127	.155	.112	.169	.220	.273	.182	.160	.254	.286	.220	.203	2.919
D	1.337	1.295	1.544	1.343	1.569	1.166	1.044	1.517	1.913	1.732	1.218	1.163	2.085	1.788	1.814	1.707	24.236
E	1.744	1.823	2.399	2.168	2.907	2.736	2.170	3.654	3.985	3.034	2.273	1.533	3.470	3.018	2.679	2.131	41.723
F	.429	.442	.389	.266	.618	1.217	.778	.956	1.166	1.166	1.165	.597	.971	.793	.631	.588	12.171
G	.120	.082	.056	.054	.121	.551	.170	.188	.327	.483	.643	.197	.178	.262	.390	.338	4.163
Total	4.593	4.424	5.043	4.356	5.871	6.475	4.942	7.252	8.715	7.968	6.564	4.833	8.121	7.442	7.189	6.212	100.000

Summary Table of Percent by Direction and Speed

Speed	N	NNE	NE	ENE	E	ESE	SE	SSE	S	SSW	SW	WSW	W	WNW	NW	NNW	Total
.45	.078	.056	.077	.053	.029	.091	.058	.014	.052	.020	.070	.034	.049	.049	.058	.050	.838
1.05	.361	.229	.265	.227	.240	.216	.234	.251	.267	.259	.246	.182	.231	.265	.299	.287	4.058
2.05	1.046	1.188	1.118	.939	1.244	1.445	.921	1.150	1.236	1.363	1.216	.807	1.109	1.051	1.272	1.264	18.369
3.05	1.096	1.186	1.370	1.484	1.764	2.167	1.228	1.594	1.597	1.470	1.477	.932	1.624	1.476	1.383	1.496	23.345
4.05	.884	.799	1.177	.983	1.208	1.227	1.084	1.531	1.592	1.357	1.143	.896	1.559	1.330	1.407	1.263	19.439
5.05	.501	.421	.571	.422	.632	.615	.624	.976	1.196	.984	.844	.707	1.146	1.135	1.047	.779	12.600
6.05	.335	.237	.301	.160	.393	.379	.365	.704	.926	.962	.625	.541	.979	.838	.815	.504	9.064
8.05	.246	.275	.146	.077	.324	.273	.343	.785	1.173	1.062	.680	.477	1.063	.949	.761	.428	9.062
10.05	.037	.034	.016	.010	.033	.055	.072	.194	.487	.391	.192	.150	.237	.261	.117	.122	2.409
13.05	.008	.000	.002	.000	.003	.009	.013	.050	.173	.087	.064	.091	.107	.076	.029	.019	.732
18.00	.000	.000	.000	.000	.000	.000	.000	.003	.016	.012	.006	.017	.014	.012	.001	.000	.082
99.00	.000	.000	.000	.000	.000	.000	.000	.000	.000	.000	.000	.000	.001	.000	.000	.000	.001
Total	4.593	4.424	5.043	4.356	5.871	6.475	4.942	7.252	8.715	7.968	6.564	4.833	8.121	7.442	7.189	6.212	100.000

NOTE: Wind directions in tables are presented in "wind from" and not "wind to" direction.

Supplemental Table C - Continued

Ground Level Joint Frequency Distribution Table Summary

Summary Table of Percent by Speed and Class

Class Speed	A	B	C	D	E	F	G
.45	.012	.003	.003	.073	.274	.260	.212
1.05	.070	.023	.035	.406	1.413	1.326	.785
2.05	1.227	.346	.351	2.809	6.958	4.678	2.000
3.05	2.762	.608	.567	4.668	9.964	3.797	.981
4.05	2.612	.560	.597	5.211	8.689	1.593	.177
5.05	1.995	.422	.463	3.773	5.580	.360	.007
6.05	1.488	.321	.371	2.954	3.827	.103	.001
8.05	1.433	.328	.372	3.159	3.719	.052	.000
10.05	.365	.097	.122	.868	.955	.002	.000
13.05	.090	.022	.033	.271	.317	.000	.000
18.00	.001	.003	.005	.044	.028	.000	.000
99.00	.000	.000	.000	.001	.000	.000	.000

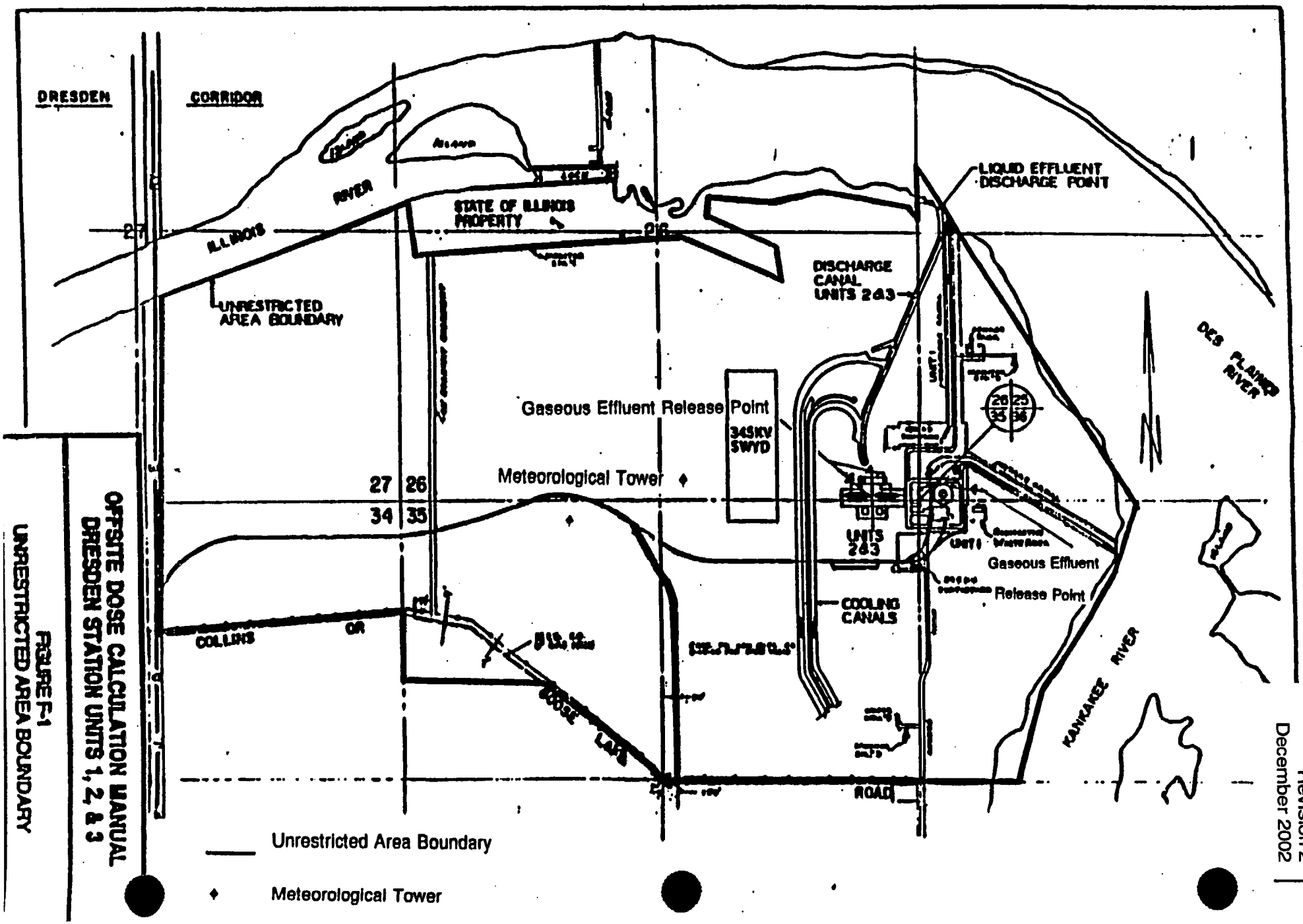

OFFSITE DOSE CALCULATION MANUAL
DRESDEN STATION UNITS 1, 2, & 3

FIGURE F-1
UNRESTRICTED AREA BOUNDARY

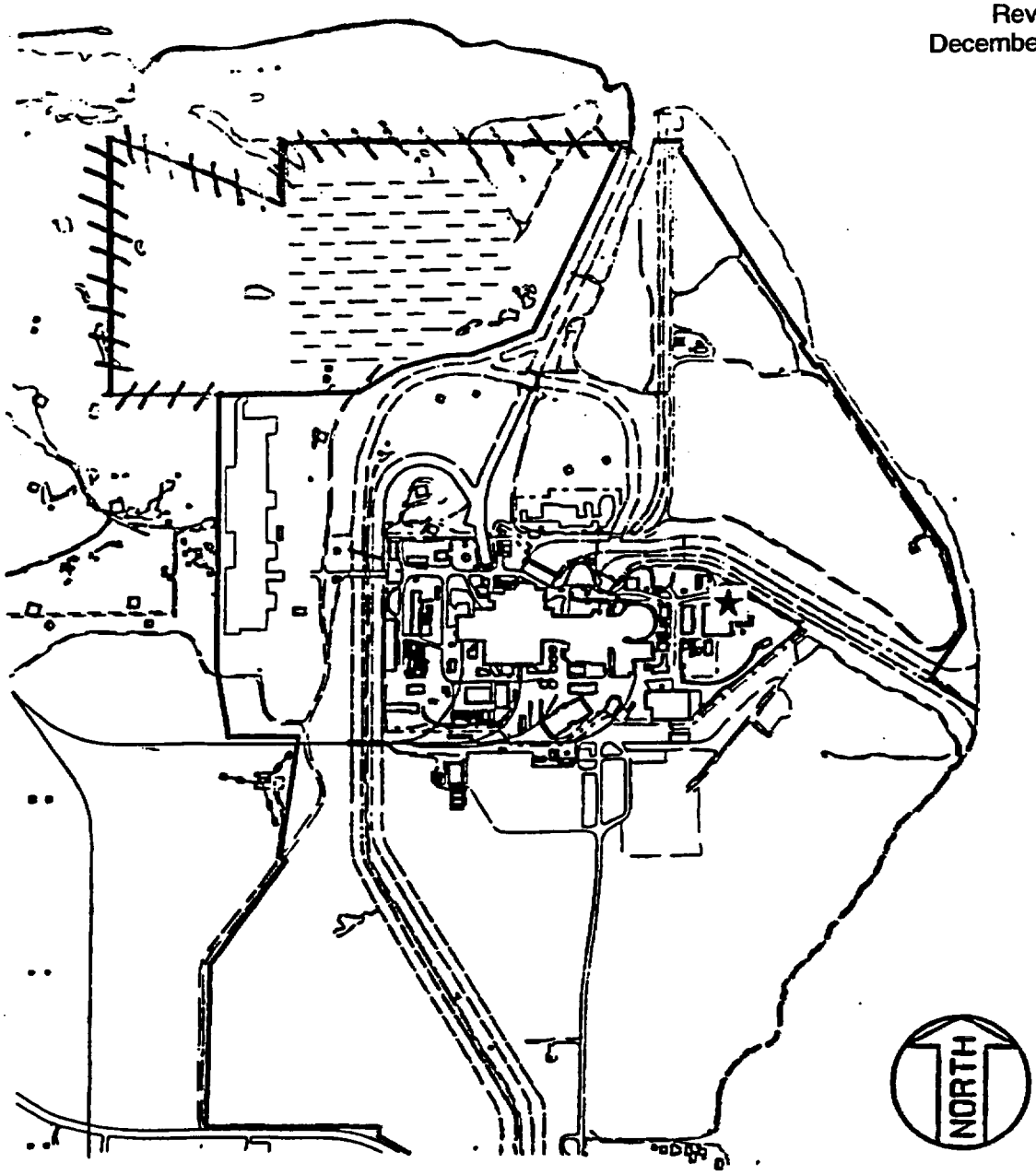

★ Interim Radwaste Storage Facility

Radwaste Storage Area (When Operational, this area may include 48-packs, DAW, and other types of storage)

Restricted Area Boundary - Extended Area (When the Radwaste Storage Area becomes operational, this area becomes part of the total Restricted Area.)

500 0 500 1000 FEET

GRAPHIC SCALE

OFFSITE DOSE CALCULATION MANUAL
DRESDEN STATION

FIGURE F-2

RESTRICTED AREA BOUNDARY