Tennessee Valley Authority, Post Office Box 2000, Spring City, Tennessee 37381-2000

WBN-TS-03-09

10 CFR 50.90

MAY 0 1 2003

U.S Nuclear Regulatory Commission
ATTN Document Control Desk
Washington, D. C. 20555

In the Matter of the Tennessee Valley Authority	))	Docket No. 50-390

WATTS BAR NUCLEAR PLANT (WBN) – LICENSE AMENDMENT (WBN-TS-03-09) TO REVISE THE TECHNICAL SPECIFICATIONS AND BASES FOR THE DELETION OF THE UNIT 2 VITAL INVERTERS

Pursuant to 10 CFR 50 90, TVA is submitting a request for an Operating License change (WBN-TS-03-09) to license NPF-90 for WBN Unit 1 This letter proposes a revision to Technical Specification (TS) 3.8.7, "Inverters - Operating " The TS as currently written requires two inverters for each of the four channels The revisions addressed by this amendment change the requirement to one inverter for each of the four channels The Bases for TS 3.8.7 and TS 3.8.8, "Inverters - Shutdown," are also updated to reflect the change to one inverter. The proposed amendment is the initial phase of a project that will replace the vital inverters to achieve improvements in the reliability of the 120V AC Vital Instrument Power System

Provided in Enclosure 1 is a complete description and justification of the proposed amendment. The remaining enclosures provide the following information·

Enclosure 2 – Outline of Key Changes Proposed for the Vital AC System

Enclosure 3 – Annotated Technical Specifications and Bases

D030

TVA has determined that there are no significant hazards considerations associated with the proposed change and that the TS change qualifies for a categorical exclusion from environmental review pursuant to the provisions of 10 CFR 51.22(c)(9). Additionally, in accordance with 10 CFR 50.91(b)(1), a copy of this proposed license amendment is being forwarded to the state designee for the State of Tennessee.

TVA desires to implement the changes outlined in the license amendment during the upcoming Cycle 5 refueling outage that is scheduled to begin in late September 2003. Based on this, TVA requests approval of the amendment by mid-September 2003. Implementation of the amendment is to be completed prior to entry into Mode 4 following the refueling outage.

There are no regulatory commitments in this submittal. If you have any questions about this request, please contact me at (423) 365-1824.

I declare under penalty of perjury that the foregoing is true and correct.
Executed on this 1st day of May, 2003.

Sincerely,

P. L. Pace
Manager, Site Licensing
and Industry Affairs

Enclosures

1. TVA's Evaluation of the Proposed Change
2. Outline of Key Changes Proposed for the Vital AC System
3. Annotated Technical Specifications and Bases

cc: See page 3

MAY 0 1 2003

PLP:JLB
Enclosures
cc (Enclosures):

NRC Resident Inspector
Watts Bar Nuclear Plant
1260 Nuclear Plant Road
Spring City, Tennessee 37381

Mr. K. N. Jabbour, Senior Project Manager
U.S. Nuclear Regulatory Commission
MS 08G9
One White Flint North
11555 Rockville Pike
Rockville, Maryland 20852-2738

U.S. Nuclear Regulatory Commission
Region II
Sam Nunn Atlanta Federal Center
61 Forsyth St., SW, Suite 23T85
Atlanta, Georgia 30303

Mr. Lawrence E. Nanny, Director
Division of Radiological Health
3rd Floor
L & C Annex
401 Church Street
Nashville, Tennessee 37243

ENCLOSURE 1

TENNESSEE VALLEY AUTHORITY
WATTS BAR NUCLEAR PLANT (WBN)
UNIT 1
DOCKET NUMBER 390

PROPOSED LICENSE AMENDMENT REQUEST WBN-TS-03-09

DESCRIPTION AND EVALUATION OF THE PROPOSED CHANGE

1.0 DESCRIPTION

This letter proposes a revision to Technical Specification (TS) 3.8.7, "Inverters - Operating." The TS as currently written requires two inverters for each of the four instrument channels. The revisions addressed by this amendment change the requirement to one inverter for each of the four channels. The Bases for TS 3.8.7 and TS 3.8.8, "Inverters - Shutdown," are also updated to reflect the change to one inverter.

The Unit 2 120V AC Vital Instrument Power Boards presently receive their uninterruptible power supply (UPS) from the Unit 2 120V AC Vital Inverters. The proposed amendment modifies the configuration of the four channels so that each Unit 2 Vital Instrument Power Board receives power from the 120V AC Vital Inverter supplying the associated Unit 1 120V AC Vital Instrument Power Board through the Unit 1 120V AC Vital Instrument Power Board. A simplified diagram of the proposed change is provided below:

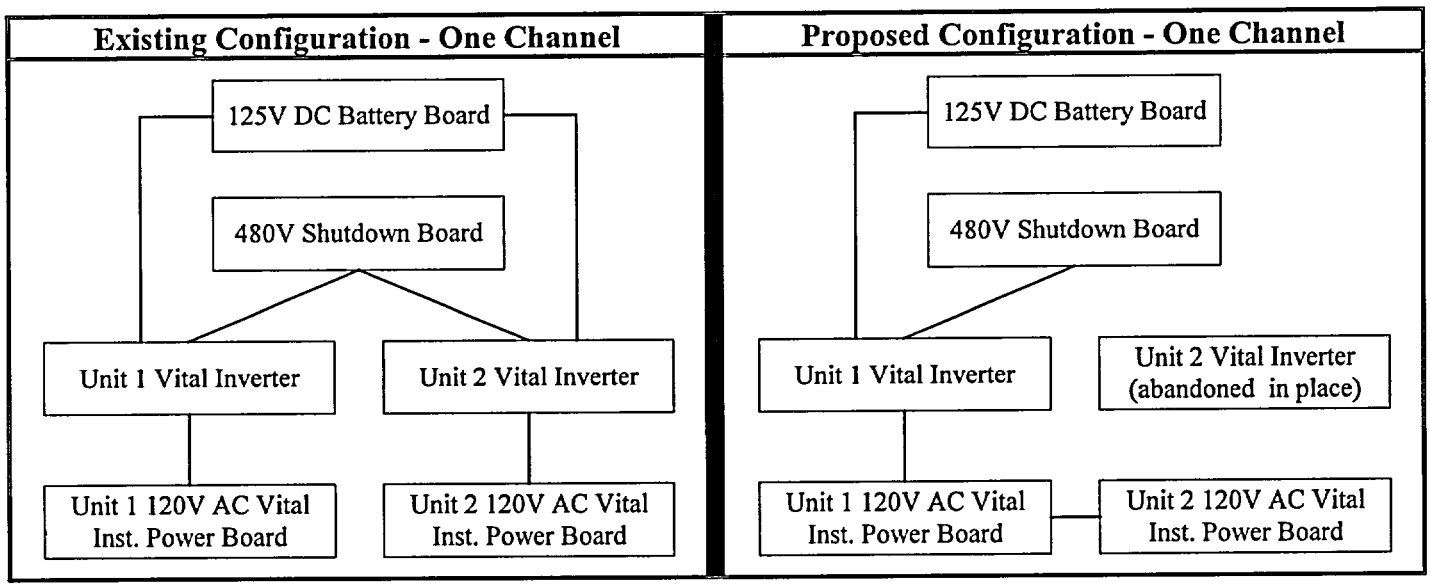

The vital inverters are designed to provide the required capacity, capability, redundancy, and reliability to ensure the availability of necessary power to vital instrumentation so that the fuel, the reactor coolant system, and the containment design limits are not exceeded. Adding the Unit 2 loads to the Unit 1 inverters does not alter the accident analyses as long as the Unit 1 inverters are capable of handling the additional loads and channel separation is maintained. Design calculations have been updated and document that the Unit 1 inverters have the capacity for the Unit 2 loads.

The modifications to the inverter configurations will facilitate the future replacement of the vital inverters along with the installation of spare inverters. TVA is currently planning to upgrade the Vital AC system in three stages during the Cycle 5, Cycle 6 and Cycle 7 refueling outages. The changes proposed in this amendment are the first step in this process and are needed for the Unit 1, Cycle 5 refueling outage planned for late September 2003. An additional amendment request may be necessary for the changes planned for Cycle 6 and Cycle 7 to address the operation of the new inverters and the incorporation of the spare inverters in the design of the plant.

2.0 PROPOSED CHANGE

Limiting Condition for Operation (LCO) 3.8.7 states that two inverters in each of the four channels shall be operable and requires the unit to be shutdown if an inverter is not operable after a 24-hour period. The changes proposed in the amendment transfer the power supply for the Unit 2 120V AC Vital Instrument Power Boards to the Unit 1 Vital Inverters. WBN Unit 2 is not an operational unit and therefore, the Unit 2 Vital Instrument Power Boards are very lightly loaded (3 KVA or less). However, the loads are required for Unit 1 operation. Once the board supplies are transferred to the Unit 1 inverters, TVA initially plans to remove the Unit 2 inverters from service and abandon the equipment. Based on this change, the TS requirements and the associated Bases must be updated to address the operation of the system with only the four Unit 1 inverters.

As indicated previously, the change to supply the Unit 2 vital power boards with the Unit 1 inverters is the first step to facilitate the replacement of the inverters and the addition of spare inverters. Details regarding the specific loads that will be supported by the four Unit 1 inverters are provided in Section 4.0 "Technical Analysis," of this enclosure. Also included in Section 4.0 is the justification for the proposed amendment. Provided in Enclosure 2 are conceptual diagrams of the key changes planned for the vital inverters and a general implementation time frame. This information may aid in the understanding of the scope of the changes requested in this amendment. In addition, the changes proposed for WBN are similar to changes that have been implemented at TVA's Sequoyah Nuclear Plant (SQN). For the SQN upgrade, TVA submitted an amendment request in a letter dated June 24, 1999. NRC's approval of the amendment was transmitted to TVA in a letter dated September 23, 1999.

The following discussion details the changes proposed to the TS and Bases. The changes to the text of the TS and Bases are reflected as italicized print for text additions and deleted text is shown as strikethrough. An annotated version of the affected TS and Bases is provided in Enclosure 3:

Proposed Revision to TS 3.8-7, "Inverters - Operating:"

The text below reflects the revisions proposed for TS 3.8-7:

LCO 3.8.7 *One* ~~Two~~ inverter~~s~~ in each of four channels shall be OPERABLE.

APPLICABILITY: MODES 1, 2, 3, and 4.

ACTIONS

CONDITION	REQUIRED ACTION	COMPLETION TIME
A. One ~~or more~~ inverters in one channel inoperable.	A.1 -------NOTE------- Enter applicable Conditions and Required Actions of LCO 3.8.9, "Distribution Systems-Operating", with any AC Vital Bus deenergized. ---------- Restore inverter~~(s)~~ to OPERABLE status.	 24 hours

Proposed Revision to TS Bases 3.8-7:

The text below reflects the revisions proposed for TS Bases 3.8-7:

Change 1 - "Background" Section:

The inverters are the preferred source of power for the AC vital buses because of the stability and reliability they achieve. There is one inverter per ***channel supplying two*** AC vital bus***es (Unit 1 and Unit 2)*** making a total of ~~eight~~ ***four*** inverters...

Change 2 - Second Paragraph of "LCO" Section:

Maintaining the required inverters OPERABLE ensures that the redundancy incorporated into the design of the RPS and ESFAS instrumentation and controls is maintained. The ~~eight~~ ***four*** inverters (~~two~~ ***one*** per channel) ensure an uninterruptible supply of AC electrical power to the AC vital buses even if the 6.9 kV shutdown boards are de-energized.

Change 3 - First Paragraph of "Action A.1:"

With one ~~or more~~ inverters in a channel~~, e.g., 1-I and/or 2-I,~~ inoperable, its associated AC vital bus*es* becomes inoperable until ~~it is~~ ***they are*** manually re-energized from ~~its~~ ***their*** associated 120 V AC instrument power distribution panel or inverter internal AC source.

Proposed Revision to TS Bases 3.8-8, "Inverters - Shutdown:"

The text below reflects the revisions proposed for TS Bases 3.8-8:

Change 1 - "LCO" Section:

The inverters ensure the availability of electrical power for the instrumentation for systems required to shutdown the reactor and maintain it in a safe condition after an anticipated operational occurrence or a postulated DBA. The battery powered inverters provide uninterruptible supply of AC electrical power to the AC vital buses even if the 6.9 kV shutdown boards are de-energized. OPERABILITY of the inverters requires that the AC vital bus*es* ***required by LCO 3.8.10, "Distribution Systems - Shutdown"*** be powered by the inverter. As a minimum, either the ~~Unit 1 and Unit 2~~ channel I and III or II and IV inverters shall be OPERABLE to support the distribution systems required by LCO 3.8.10.~~, "Distribution Systems – Shutdown."~~...

3.0 BACKGROUND

The 120V AC Vital Power System is a Class 1E system that provides a source of instrument and control power for reactor protection circuits and other critical instrumentation systems and components within the plant. The system is configured and the loads arranged to preclude the loss of any redundant essential and/or protective function due to a single failure within the system.

The system presently consists of eight uninterruptible power supplies, eight 120V AC Vital Instrument Power Boards, and protective devices. Each unit has four identical power channels (designated as Channels I, II, III, and IV) with the equipment of each channel being electrically and physically independent from the equipment of other channels so that a failure in one channel will not cause a failure in another channel. Figure 8.1-3 of the WBN Updated Final Safety Analysis Report (UFSAR) depicts the key diagram for the 120V AC Vital Power System. Figure 8.1-3 currently indicates that power for each of the channels is provided from the following sources:

- Two 480V AC sources.

- A 125V DC source.
- A 120V AC maintenance source.

Alternating-current power for each UPS is derived from the Class 1E Auxiliary Power System via two 480V AC, 3-phase circuits. The DC input power source is derived from the Class 1E 125V DC Vital Power System. The normal source to each 120V AC Vital Instrument Power Board is from its associated UPS system.

Each UPS consist of three major subassemblies:

- A DC power supply.
- An auctioneering circuit.
- An inverter circuit.

During normal operation the UPS's DC power supply converts the 480V AC normal UPS input to 125V DC. The auctioneering circuit accepts this DC power supply (normal supply) and the 125V Vital Battery Board input (emergency supply) and is capable of a switchless bi-directional transfer between the two sources in the event of a 480V AC supply failure and restoration. Thus, during an emergency in which the 480V AC power is lost to the UPS, the auctioneering circuit will automatically switch to the battery board input. The DC output at the auctioneering circuit is then converted by the inverter circuitry to a regulated 120V AC output to the Vital Instrument Power Boards.

Each 120V AC Vital Instrument Power Board supplies the following types of loads:

- Reactor protection instrumentation and control systems.
- Engineered Safety Feature (ESF) instrumentation and control systems.
- Separation and interlock relay panels.
- Other various safety-related components and systems.

Non-safety-related loads may be supplied from Class 1E protective devices located on the Class 1E 120V AC Vital Instrument Power Boards. Since Watts Bar Unit 2 is not an operational unit, the Unit 2 Vital Instrument Power Boards are very lightly loaded (3 KVA or less). The loads supplied from the Vital Instrument Power Boards are shown on WBN UFSAR Figures 8.3-37 through 8.3-40.

The measures outlined in this amendment request were initiated as one step to improve the overall reliability of the Vital Instrument Power System. In addition, TVA is aware that the failure of a vital inverter may result in the loss of a vital AC power channel which can cause a unit trip due to the loss of critical instrumentation and control capability. A WBN event similar to this occurred on September 4, 2002, and was documented as Licensee Event Report (LER) 390/2001-02 (TVA letter dated November 5, 2001).

As depicted in Enclosure 2, the planned enhancements ultimately result in the replacement of the Unit 1 inverters. The design for the new inverters provides several enhancements over the old inverters. One such feature automatically switches to an AC source powered through a regulated transformer upon the loss of output from the inverter. In addition to this, the installation of a second set of inverters (four inverters) is planned which will be maintained as spares for the operational inverters.

At present, the Vital Power System has no provisions for qualified backup power supplies in the event of an inverter failure. This may result in inverter repairs extending past the 24 hour TS allowed outage time and the forced shutdown of the unit. The proposed amendment will allow the majority of the work for the inverter system upgrade to occur while the unit is operating and prevent the extension of planned outages.

The design changes associated with the inverter upgrade may result in the revisions to the following sections of the WBN UFSAR. Note that the revisions may also affect various figures and tables associated with these UFSAR sections:

- 1.2.2.7, "Plant Electrical System."
- 8.1.2, "Plant Electrical Power System."
- 8.3, "Onsite (Standby) Power System."

4.0 TECHNICAL ANALYSIS

The following discussion details the justification for the changes. The justification is principally based on revised engineering calculations which establish that the loads from the Unit 2 Vital Instrument Power Boards can be transferred to and adequately support by the Unit 1 vital inverters. Provided in Enclosure 2 is an outline of the key changes that are planned to the vital inverters and a general implementation time frame. This information may aid in the understanding of the scope of the changes requested in this amendment.

Justification for the Proposed TS and Bases Revisions:

The following revisions of the listed WBN calculations adequately demonstrate that the Unit 1 inverters can support the existing loads of the Unit 1 Vital Instrument Power Boards along with the loads from the Unit 2 Vital Instrument Power Boards and continue to perform their intended safety function:

- Revision 92 of WBNEEBMSTI120016, "120VAC Vital Inverter Loading."
- Revision 46 of WBNEEBMSTI060017, "120VAC Vital Inverter Instrument Power Voltage Profile."
- Revision 21 of WBPEVAR9509001, "Appendix R Multiple High Impedance Fault Analysis."

WBN Unit 2 is not an operational unit, and therefore, the Unit 2 Vital Instrument Power Boards are very lightly loaded. This is currently reflected in UFSAR Table 8.3-11, "120V A.C. Vital Instrument Power Board Load Data." The data in this table indicates that the Unit 2 boards currently have a load limit of 3 KVA. Consistent with this, the following table documents that the addition of the Unit 2 instrument power loads to the Unit 1 inverters will add no more than 3 KVA per channel to the Unit 1 inverters. It should be noted that the proposed configuration maintains the required channel separation and no automatic connections are provided between the four channels:

Inverters 1-I and 2-I	KVA	Inverters 1-II and 2-II	KVA
Existing Load - Inverter 1-I	12.6	Existing Load - Inverter 1-II	12.1
Existing Load - Inverter 2-I	1.4	Existing Load - Inverter 2-II	1.9
Total Load Applied to Inverter 1-I	14.0	Total Load Applied to Inverter 1-II	14.0
Load Capacity - Inverter 1-I	20.0	Load Capacity - Inverter 1-1I	20.0
Inverters 1-III and 2-III	**KVA**	**Inverters 1-IV and 2-IV**	**KVA**
Existing Load - Inverter 1-III	9.3	Existing Load - Inverter 1-IV	9.7
Existing Load - Inverter 2-III	1.3	Existing Load - Inverter 2-IV	1.1
Total Load Applied to Inverter 1-III	10.6	Total Load Applied to Inverter 1-IV	10.8
Load Capacity - Inverter 1-III	20.0	Load Capacity - Inverter 1-1V	20.0

TVA's processes for the maintenance of the unit's design and licensing basis will ensure required updates are processed. The table below reflects the loading changes for Table 8.3-11 that will be required once the proposed amendment is approved for implementation:

Channel	I	II	III	IV
Unit 1 Inverter Rating (KVA)	20	20	20	20
Maximum Load for Unit 1 Board (KVA)	17	17	15	15
Maximum Load for Unit 2 Board (KVA)	3.0	3.0	3.0	3.0

The initial conditions for the Design Basis Accidents (DBAs) defined in the WBN UFSAR assume the Engineered Safety Feature (ESF) systems are operable. The vital inverters are designed to provide the required capacity, capability, redundancy, and reliability to ensure the availability of necessary power to vital instrumentation so that the fuel, reactor coolant system, and containment design limits are not exceeded. Adding the Unit 2 loads to the Unit 1 inverters does not alter the accident analyses as long as the Unit 1 inverters are capable of handling the additional loads and channel separation is maintained. The above listed calculations establish that the Unit 1 inverters have the capacity for the Unit 2 loads.

In summary, this proposed amendment revises TS 3.8.7 to allow for the abandonment of the WBN Unit 2 120V AC Vital Inverters. Both the Unit 1 and Unit 2 120V AC Vital Instrument Power Boards will receive UPS power from the Unit 1 120V AC Vital Inverters with channel separation being maintained. The Unit 1 vital inverters are of sufficient size that the addition of the loads from the Unit 2 Vital Instrument Power Boards will not compromise the inverters ability to perform their intended safety functions. The implementation of the proposed changes will facilitate the future replacement of the Unit 1 inverters and the installation of spare inverters.

5.0 REGULATORY SAFETY ANALYSIS

5.1 No Significant Hazards Consideration

TVA's letter dated May 1, 2003, proposed a revision to Technical Specification (TS) 3.8.7, "Inverters - Operating," for Watts Bar Nuclear Plant (WBN). The TS as currently written requires two inverters for each of the four channels. The revisions addressed by this amendment change the requirement to one inverter for each of the four channels. The Bases for TS 3.8.7 and TS 3.8.8, "Inverters - Shutdown," are also updated to reflect the change to one inverter.

WBN Unit 2 is not an operational unit and therefore, the Unit 2 120V AC Vital Instrument Power Boards are very lightly loaded (3 KVA or less). However, the loads are required for Unit 1 operation. The Unit 2 Vital Instrument Power Boards presently receive their uninterruptible power supply (UPS) from the Unit 2 Vital Inverters. The proposed amendment modifies the configuration of the four channels so that each Unit 2 Vital Instrument Power Board receives power from the 120V AC Vital Inverter supplying the associated Unit 1 120V AC Vital Instrument Power Board. Design calculations document that the Unit 1 inverters have adequate capacity to support the addition of the Unit 2 loads.

TVA has evaluated whether or not a significant hazards consideration is involved with the proposed amendment by focusing on the three standards set forth in 10 CFR 50.92, "Issuance of amendment," as discussed below:

1. Does the proposed change involve a significant increase in the probability or consequences of an accident previously evaluated?

Response: No. The proposed revisions to WBN's Vital AC Power System do not alter the safety functions of the Vital Inverters or the Unit 1 and Unit 2 120V AC Vital Instrument Power Boards. The initial conditions for the Design Basis Accidents (DBAs) defined in the WBN Updated Final Safety Analysis Report (UFSAR) assume the Engineered Safety Feature (ESF) systems are operable. The vital inverters are designed to provide the required capacity, capability, redundancy, and reliability to ensure the availability of necessary power to vital instrumentation so that the fuel, reactor coolant system, and containment design limits are not exceeded. Adding the Unit 2 loads to the Unit 1 inverters does not alter the accident analyses as long as the Unit 1 inverters are capable of handling the additional loads and channel separation is maintained. Design calculations document that the Unit 1 inverters have adequate capacity to support the addition of the Unit 2 loads and no changes are proposed that will impact the separation of the Vital AC Power System. In addition, the redundant capabilities of the Vital AC System as currently described in the UFSAR are not impacted by the proposed amendment.

The inverters and the associated 120V AC Vital Instrument Power Boards are utilized to support instrumentation that monitor critical plant parameters to aid in the detection of accidents and to support the mitigation of accidents, but are not considered to be an initiator of design basis accidents. Based on this and the preceding information, the proposed amendment does not involve a significant increase in the probability or consequences of an accident previously evaluated.

2. Does the proposed change create the possibility of a new or different kind of accident from any accident previously evaluated?

Response: No. When implemented, the proposed TS amendment will allow the Unit 2 Vital Instrument Power Boards to receive their uninterruptible power supply (UPS) power from the Unit 1 inverters instead of the Unit 2 inverters. Calculations have verified that the additional load will not affect the ability of the Unit 1 inverters to perform their intended safety functions. In addition, the inverters and the 120V AC Vital Instrument Power Boards are not considered to be an initiator of a design basis accident. These components provide power to instrumentation that supports the identification and mitigation of accidents as well as system control functions during normal plant operations. The functions of the inverters are not altered by the proposed TS change and will not create

the possibility of a new or different accident. Further, the addition of the Unit 2 loads to the Unit 1 inverters is the principal change to the inverter system and this change is bounded by previously evaluated accident analyses. Therefore, the proposed amendment does not create the possibility of a new or different kind of accident from any accident previously evaluated.

3. Does the proposed change involve a significant reduction in a margin of safety?

Response: No. The plant setpoints and limits that are utilized to ensure safe operation and detect accident conditions are not impacted by the proposed TS amendment. The inverters and the 120V Vital Instrument Power Boards will continue to provide reliable power to safety-related instrumentation for the identification and mitigation of accidents and to support plant operation. Therefore, the margin of safety is not reduced.

Based on the above, TVA concludes that the proposed amendment presents no significant hazards consideration under the standards set forth in 10 CFR 50.92(c), and, accordingly, a finding of "no significant hazards consideration" is justified.

5.2 Applicable Regulatory Requirements/Criteria

Listed below are the principal sections of the WBN UFSAR that address the Vital AC System:

- 1.2.2.7, "Plant Electrical System."
- 8.1.2, "Plant Electrical Power System."
- 8.3, "Onsite (Standby) Power System."

For these UFSAR sections, the principal review performed by NRC is documented in the Safety Evaluation Report (SER) dated June 1982, NUREG-0847 and in Supplement 13 dated April 1994, and Supplement 14 dated December 1994. This assessment of the Vital AC System is documented in the following sections of the SER and supplements:

SER:

- 7.6.1, "System Description"
- 8.3.2, "Onsite DC System Compliance with GDC 17"
- 8.3.2.5, "Nonsafety Loads Powered from the DC Distribution System and Vital Inverters"

Supplement 13:

- 8.3.1.7, "Possible Interconnection Between Redundant Divisions Through the Normal and Alternate Power to the Battery Charger"
- 8.3.1.11, "Test and Inspection of the Vital Power System"
- 8.3.2.5, "Non-Safety Loads Powered from the DC Distribution System and Vital Inverters"

Supplement 14:

- 8.3.2.5, "Non-Safety Loads Powered from the DC Distribution System and Vital Inverters"

The discussion provided in the SER sections, identified that the following key documents were considered in NRC's assessment:

- Institute of Electrical and Electronic Engineers (IEEE) 308-1971/1974, "IEEE Standard Criteria for Class 1E Power Systems for Nuclear Power Generating Stations."
- IEEE-485-1983, "Recommended Practices for Sizing Large Lead Storage Batteries for Generating Stations and Substations."
- Regulatory Guide 1.32, "Criteria for Safety-Related Electric Power Systems for Nuclear Power Plants."
- Regulatory Guide 1.47, "Bypassed and Inoperable Status Indication for Nuclear Power Plant Safety Systems."

The proposed changes to the Vital AC system maintain compliance with the requirements in the above listed documents. Further, Generic Letter (GL) 91-11, "Resolution of Generic Issues 48, LCOs For Class 1E Vital Instrument Buses, and 49, Interlocks and LCOs For Class 1E Tie Breakers," identified considerations for the vital power system. The GL indicated that Technical Specifications (TS) developed under the "Technical Specifications Improvement Program" will adopt the requirements of GL 91-11. The WBN TS and TS Bases were initially developed as Improved Standard Technical Specifications (ISTS) based on Revision 0 of NUREG 1431, "Standard Technical Specifications Westinghouse Plants," and proposed changes to the NUREG incorporated in Revision 1. Therefore, the TS revised by the proposed amendment conform to the requirements of GL 91-11. In its current configuration, only Unit 1 at WBN is operational and two operable inverter systems are necessary for each of the four channels of Vital AC buses. The TS are being revised to support an equipment modification wherein only a single inverter per channel will be necessary to supply the Vital AC buses

for a single operating unit. The intent of the TS with respect to LCO conditions, required actions, completion times and surveillances performed will be unaffected. The proposed modification will not introduce any new interties between redundant Class 1E buses or create opportunities for single failures that could result in the loss of multiple redundant buses. The proposed modification will interconnect buses that are nominally for Units 1 and 2, however, the only loads supplied from the buses are those required for the operation of Unit 1.

In conclusion, based on the considerations discussed above, (1) there is reasonable assurance that the health and safety of the public will not be endangered by operation in the proposed manner, (2) such activities will be conducted in compliance with the Commission's regulations, and (3) the issuance of the amendment will not be inimical to the common defense and security or to the health and safety of the public.

6.0 ENVIRONMENTAL CONSIDERATION

A review has determined that the proposed amendment would change a requirement with respect to installation or use of a facility component located within the restricted area, as defined in 10 CFR 20, or would change an inspection or surveillance requirement. However, the proposed amendment does not involve (i) a significant hazards consideration, (ii) a significant change in the types or significant increase in the amounts of any effluent that may be released offsite, or (iii) a significant increase in individual or cumulative occupational radiation exposure. Accordingly, the proposed amendment meets the eligibility criterion for categorical exclusion set forth in 10 CFR 51.22(c)(9). Therefore, pursuant to 10 CFR 51.22(b), no environmental impact statement or environmental assessment need be prepared in connection with the proposed amendment.

7.0 REFERENCES

1. TVA's letter to NRC dated June 24, 1999, Sequoyah Nuclear Plant (SQN) Technical Specification (TS) Change Number 99-06.

2. NRC's letter to TVA dated September 23, 1999, approving SQN TS Change Number 99-06.

3. Institute of Electrical and Electronic Engineers (IEEE) 308-1971, "IEEE Standard Criteria for Class 1E Power Systems for Nuclear Power Generating Stations."

4. IEEE-485-1983, "Recommended Practices for Sizing Large Lead Storage Batteries for Generating Stations and Substations."

5. Regulatory Guide 1.32, "Criteria for Safety-Related Electric Power Systems for Nuclear Power Plants."

6. Regulatory Guide 1.47, "Bypassed and Inoperable Status Indication for Nuclear Power Plant Safety Systems."

7. Generic Letter 91-11, "Resolution of Generic Issues 48, LCOs for Class 1E Vital Instrument Buses, and 49, Interlocks and LCOs For Class 1E Tie Breakers."

ENCLOSURE 2

TENNESSEE VALLEY AUTHORITY
WATTS BAR NUCLEAR PLANT (WBN)
UNIT 1
DOCKET NUMBER 390

PROPOSED LICENSE AMENDMENT REQUEST WBN-TS-03-09

Outline of Key Changes Proposed for the Vital AC System

The information provided in this enclosure outlines the sequence of modifications that are planned for the replacement of the vital inverters and the addition of spare inverters. Channel I is shown as an example.

WBN Unit 1 - Vital AC
Proposed Configuration to be implemented During Cycle 5

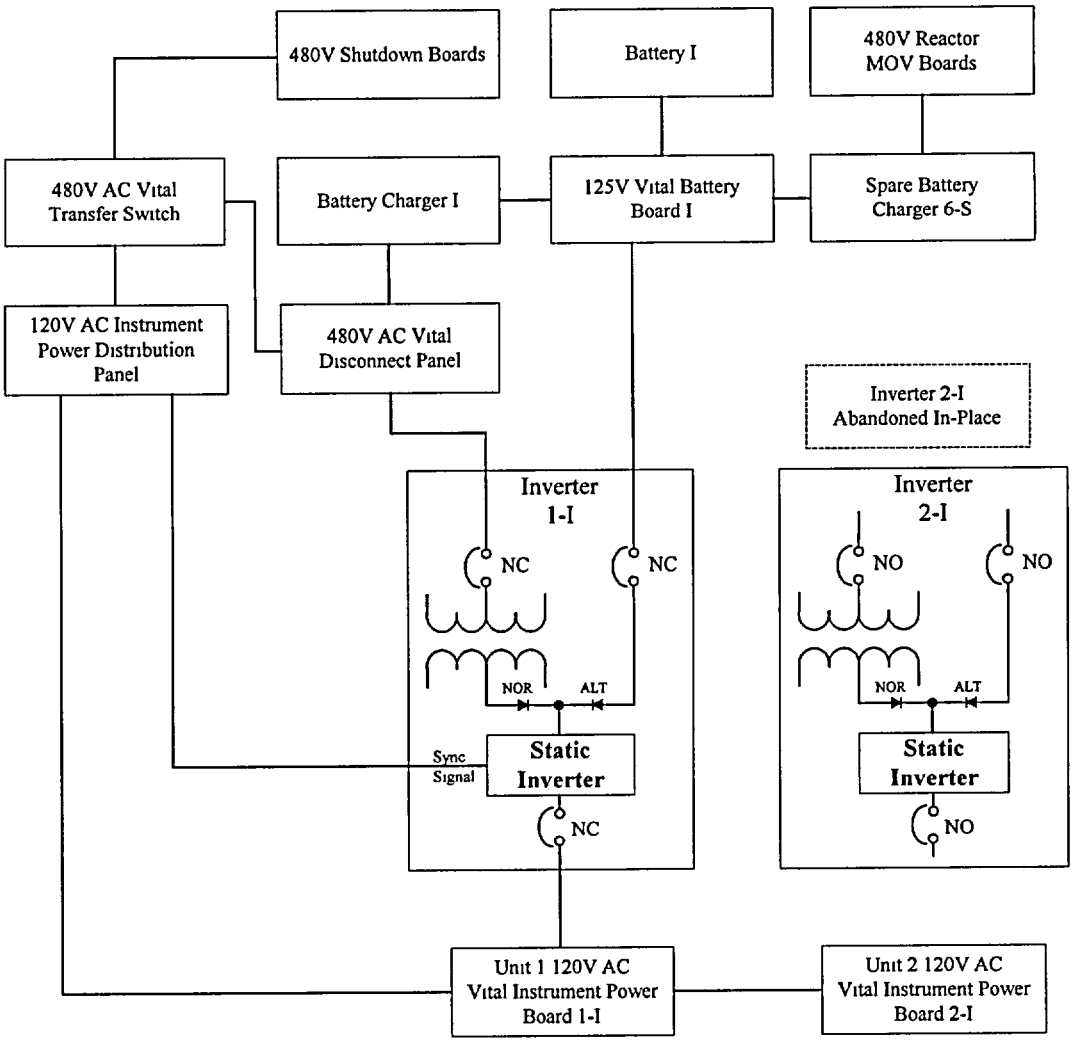

I. <u>Actions to be Implemented Prior to the Cycle 5 Outage:</u>

A. The 480V AC Vital Disconnect Panels will be physically installed in the plant along with the required conduit and cabling. The disconnect panels provide the capability to individually isolate the 480V loads from the transfer switch. This feature improves personnel safety and will facilitate the future replacement of the vital inverters.

II. <u>Actions to be Implemented During the Cycle 5 Outage:</u>

A. The cables for the disconnect panels will be terminated.

B. The Unit 1 and Unit 2 Vital Instrument Power Boards will be connected together so that the both units are supplied from the Unit 1 inverter.

C. The Unit 2 inverters will be abandoned in-place.

WBN Unit 1 - Vital AC
Configuration to be implemented During Cycle 6 (Conceptual Design)

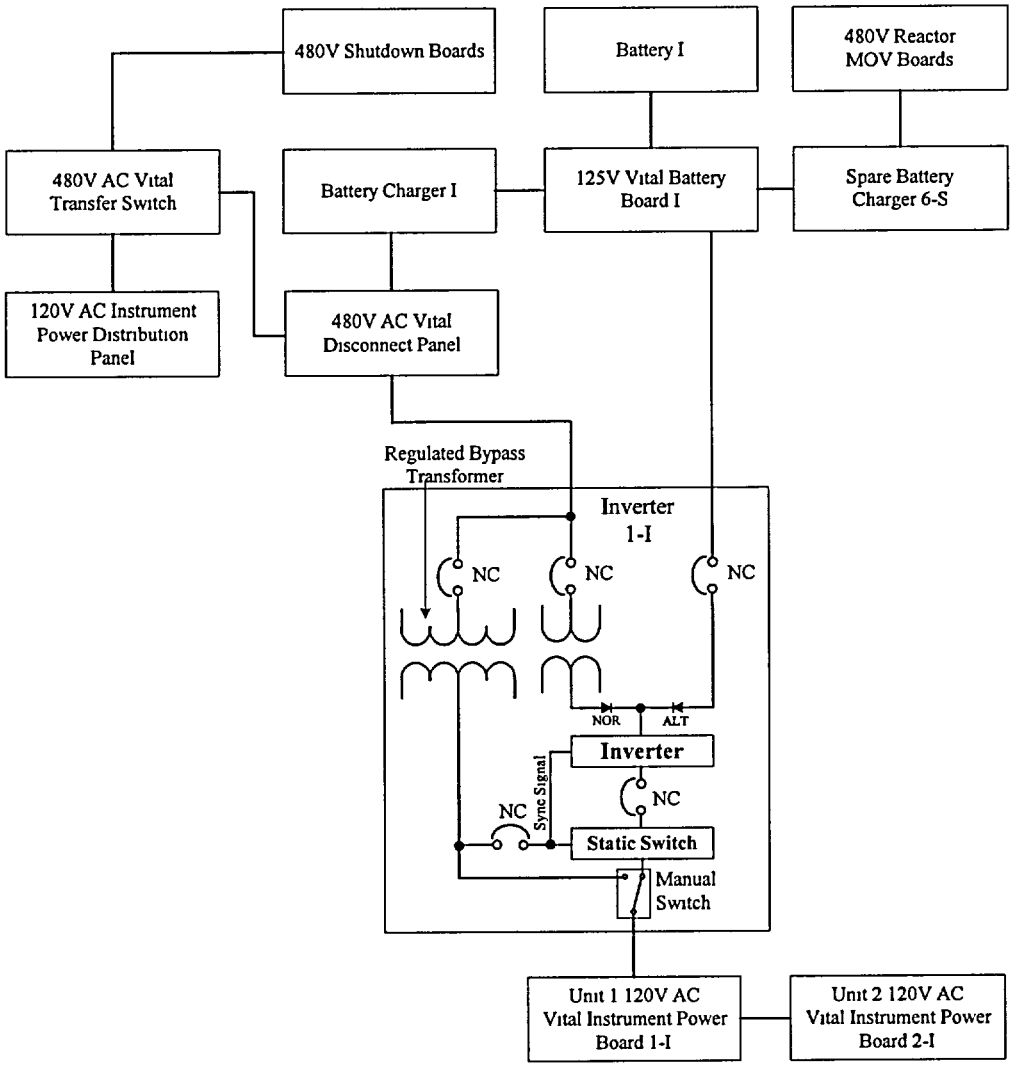

I. <u>Actions to be Implemented Prior to the Cycle 6 Outage:</u>

A. The abandoned Unit 2 inverters will be removed and the new inverters will be installed. The new inverters will have regulated bypass transformers and static switches. The uninterruptible power supply (UPS) output will automatically transfer to the regulated bypass transformer in the event of inverter failure or overload.

B. Initiate, if required, a license amendment request to address unit operation with the new inverters.

II. <u>Actions to be Implemented During the Cycle 6 Outage:</u>

A. The electrical connections for the old Unit 1 inverters will be removed and the equipment will be abandoned in-place.

B. The electrical connections for the new inverters will be terminated.

C. The new inverters will be appropriately tested prior to being placed into service as the Unit 1 inverters.

WBN Unit 1 - Vital AC
Configuration to be implemented During Cycle 7 (Conceptual Design)

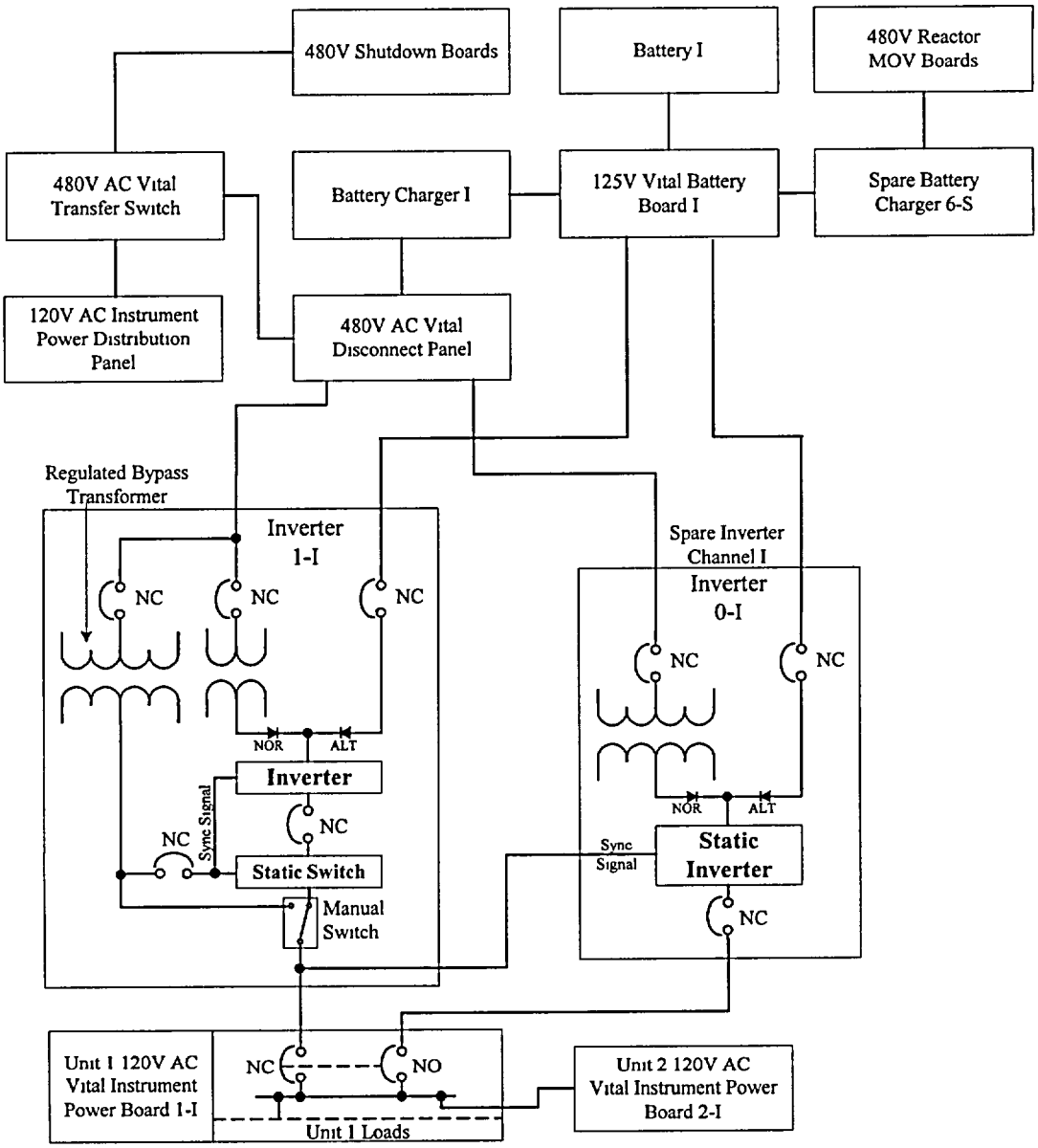

I. <u>Actions to be Implemented Prior to the Cycle 7 Outage:</u>

A. The abandoned old Unit 1 inverters will be removed and new spare inverters will be installed. The new spare inverters will not have static switches or regulating bypass transformers.

B. Initiate, if required, a license amendment request to address operation of the spare inverters.

II. <u>Actions to be Implemented During the Cycle 7 Outage:</u>

A. The electrical connections for the new spare inverters will be terminated.

B. The new spare inverters will be appropriately tested prior to being placed into service.

ENCLOSURE 3

TENNESSEE VALLEY AUTHORITY
WATTS BAR NUCLEAR PLANT (WBN)
UNIT 1
DOCKET NUMBER 390

PROPOSED LICENSE AMENDMENT REQUEST WBN-TS-03-09

Annotated Technical Specifications and Bases

I. **Affected Page List:**

3.8-37
B 3.8-81
B 3.8-82
B 3.8-83
B 3.8-86

Note:
For the attached annotated pages, wording additions are shown as bold-italicized text and deletions are shown as strikethrough.

3.8 ELECTRICAL POWER SYSTEMS

3.8.7 Inverters-Operating

LCO 3.8.7 ***One*** ~~Two~~ inverter~~s~~ in each of four channels shall be OPERABLE.

APPLICABILITY: MODES 1, 2, 3, and 4.

ACTIONS

CONDITION	REQUIRED ACTION	COMPLETION TIME
A. ***One*** ~~or more~~ inverter~~s~~ in one channel inoperable.	A.1 --------NOTE--------- Enter applicable Conditions and Required Actions of LCO 3.8.9, "Distribution Systems-Operating", with any AC Vital Bus deenergized. ---------- Restore inverter~~(s)~~ to OPERABLE status.	24 hours
B. Required Action and associated Completion Time not met.	B.1 Be in MODE 3. AND B.2 Be in MODE 5.	6 hours 36 hours

B 3.8 ELECTRICAL POWER SYSTEMS

B 3.8.7 Inverters - Operating

BASES

BACKGROUND

The inverters are the preferred source of power for the AC vital buses because of the stability and reliability they achieve. There is one inverter per ***channel supplying two*** AC vital bus***es (Unit 1 and Unit 2)*** making a total of ~~eight~~ ***four*** inverters. The function of the inverter is to provide AC electrical power to the AC vital buses. The inverters can be powered from an internal AC source/rectifier or from the vital battery. The vital battery provides an uninterruptible power source for the instrumentation and controls for the Reactor Protective System (RPS) and the Engineered Safety Feature Actuation System (ESFAS). Specific details on inverters and their operating characteristics are found in the Watts Bar FSAR, Section 8 (Ref. 1).

APPLICABLE SAFETY ANALYSES

The initial conditions of Design Basis Accident (DBA) and transient analyses in the FSAR, Section 6 (Ref. 2) and Section 15 (Ref. 2), assume Engineered Safety Feature systems are OPERABLE. The inverters are designed to provide the required capacity, capability, redundancy, and reliability to ensure the availability of necessary power to the RPS and ESFAS instrumentation and controls so that the fuel, Reactor Coolant System, and containment design limits are not exceeded. These limits are discussed in more detail in the Bases for Section 3.2, Power Distribution Limits; Section 3.4, Reactor Coolant System (RCS); and Section 3.6, Containment Systems.

The OPERABILITY of the inverters is consistent with the initial assumptions of the accident analyses and is based on meeting the design basis of the plant. This includes maintaining required AC vital buses OPERABLE during accident conditions in the event of:

a. An assumed loss of all offsite AC electrical power or all onsite AC electrical power; and

b. A worst case single failure.

(continued)

BASES

APPLICABLE SAFETY ANALYSIS (continued)

Inverters are a part of the distribution systems and, as such, satisfy Criterion 3 of the NRC Policy Statement.

LCO

The inverters ensure the availability of AC electrical power for the systems instrumentation required to shut down the reactor and maintain it in a safe condition after an anticipated operational occurrence (AOO) or a postulated DBA.

Maintaining the required inverters OPERABLE ensures that the redundancy incorporated into the design of the RPS and ESFAS instrumentation and controls is maintained. The ~~eight~~ ***four*** inverters (~~two~~ ***one*** per channel) ensure an uninterruptible supply of AC electrical power to the AC vital buses even if the 6.9 kV shutdown boards are de-energized.

OPERABLE inverters require the associated AC vital bus to be powered by the inverter with output voltage and frequency within tolerances and power input to the inverter from a 125 VDC vital battery. Alternatively, power supply may be from an internal AC source via rectifier as long as the vital battery is available as the uninterruptible power supply. Additionally, the inverter channel must not be connected to the cross train 480 V power supply.

APPLICABILITY

The inverters are required to be OPERABLE in MODES 1, 2, 3, and 4 to ensure that:

a. Acceptable fuel design limits and reactor coolant pressure boundary limits are not exceeded as a result of AOOs or abnormal transients; and

b. Adequate core cooling is provided, and containment OPERABILITY and other vital functions are maintained in the event of a postulated DBA.

Inverter requirements for MODES 5 and 6 are covered in the Bases for LCO 3.8.8, "Inverters - Shutdown."

(continued)

BASES (continued)

ACTIONS

A.1

With one ~~or more~~ inverter~~s~~ in a channel~~, e.g., 1-I and/or 2-I,~~ inoperable, its associated AC vital bus***es*** become~~s~~ inoperable until ~~it is~~ ***they are*** manually re-energized from ~~its~~ ***their*** associated 120 V AC instrument power distribution panel or inverter internal AC source.

For this reason, a Note has been included in Condition A requiring the entry into the Conditions and Required Actions for LCO 3.8.9, "Distribution Systems-Operating." This ensures that the vital bus is reenergized within 2 hours.

Required Action A.1 allows 24 hours to fix the inoperable inverter and return it to service. The 24 hour limit is based upon engineering judgment, taking into consideration the time required to repair an inverter and the additional risk to which the plant is exposed because of the inverter inoperability. This has to be balanced against the risk of an immediate shutdown, along with the potential challenges to safety systems such a shutdown might entail. When the AC vital bus is powered from its associated 120 V AC instrument power distribution panel, it is relying upon interruptible AC electrical power sources (offsite and onsite). The uninterruptible inverter source to the AC vital buses is the preferred source for powering instrumentation trip setpoint devices.

B.1 and B.2

If the inoperable devices or components cannot be restored to OPERABLE status within the required Completion Time, the plant must be brought to a MODE in which the LCO does not apply. To achieve this status, the plant must be brought to at least MODE 3 within 6 hours and to MODE 5 within 36 hours. The allowed Completion Times are reasonable, based on operating experience, to reach the required plant conditions from full power conditions in an orderly manner and without challenging plant systems.

(continued)

BASES (continued)

LCO

The inverters ensure the availability of electrical power for the instrumentation for systems required to shutdown the reactor and maintain it in a safe condition after an anticipated operational occurrence or a postulated DBA. The battery powered inverters provide uninterruptible supply of AC electrical power to the AC vital buses even if the 6.9 kV shutdown boards are de-energized. OPERABILITY of the inverters requires that the AC vital bus***es required by LCO 3.8.10, "Distribution Systems - Shutdown"*** be powered by the inverter. As a minimum, either the ~~Unit 1 and Unit 2~~ channel I and III or II and IV inverters shall be OPERABLE to support the distribution systems required by LCO 3.8.10.~~, "Distribution Systems - Shutdown."~~ Additionally, the inverter channel must not be connected to the cross-train 480 V power supply. This ensures the availability of sufficient inverter power sources to operate the plant in a safe manner and to mitigate the consequences of postulated events during shutdown (e.g., fuel handling accidents).

APPLICABILITY

The inverters required to be OPERABLE in MODES 5 and 6 and during movement of irradiated fuel assemblies provide assurance that:

a. Systems needed to mitigate a fuel handling accident are available;

b. Systems necessary to mitigate the effects of events that can lead to core damage during shutdown are available; and

c. Instrumentation and control capability is available for monitoring and maintaining the plant in a cold shutdown condition or refueling condition.

Inverter requirements for MODES 1, 2, 3, and 4 are covered in LCO 3.8.7.

ACTIONS

A.1, A.2.1, A.2.2, A.2.3, and A.2.4

If two trains are required by LCO 3.8.10, the remaining OPERABLE Inverters may be capable of supporting sufficient required features to allow continuation of CORE ALTERATIONS,

(continued)