Pacific Gas and
Electric Company

Lawrence F. Womack
Vice President
Nuclear Services

Diablo Canyon Power Plant
P.O. Box 56
Avila Beach, CA 93424

805.545.4600
Fax: 805.545.4234

April 25, 2003

PG&E Letter DCL-03-047

U.S. Nuclear Regulatory Commission
ATTN: Document Control Desk
Washington, DC 20555-0001

Docket No. 50-275, OL-DPR-80
Docket No. 50-323, OL-DPR-82
Diablo Canyon Units 1 and 2
Response to NRC Request for Additional Information Regarding License Amendment Request 02-03, "Spent Fuel Cask Handling"

Dear Commissioners and Staff:

By letter dated April 15, 2002, the Pacific Gas and Electric Company (PG&E) submitted an application for amendment to Facility Operating License Nos. DPR-80 and DPR-82, pursuant to 10 CFR 50.90. The License Amendment Request (LAR) submitted, for Nuclear Regulatory Commission (NRC) review and approval, proposed changes in the implementation of the Diablo Canyon Power Plant (DCPP) NUREG-0612 Control of Heavy Loads Program together with other analyses, design, and procedure changes required to implement a dry cask Independent Spent Fuel Storage Installation (ISFSI).

The NRC staff has identified additional heavy loads information required to complete their evaluation associated with LAR 02-03, which will allow handling and loading of Holtec International's (Holtec's) multi-purpose canisters and transfer cask in the DCPP 10 CFR 50 facilities. PG&E's response to the request for additional information (RAI) is included in Enclosures 1, 2, and 3. Enclosure 1 contains PG&E's response to specific RAIs. Enclosure 2 contains a list of tables referenced in Enclosure 1 followed by the tables. Enclosure 3 contains a list of figures referenced in Enclosure 1 followed by the figures.

This additional information does not affect the results of the safety evaluation and no significant hazards determination previously transmitted in PG&E Letter DCL-02-044, "License Amendment Request 02-03, Spent Fuel Cask Handling," dated April 15, 2002.

If you have any questions regarding this response, please contact Mr. Terence Grebel at (805) 545-4160.

A001

Sincerely,

Lawrence F. Womack
Vice President - Nuclear Services

gwh
Enclosure
cc: Diablo Distribution
cc/enc: Edgar Bailey, DHS
James R. Hall
Ellis W. Merschoff
David L. Proulx
David A. Repka
Girija S. Shukla

UNITED STATES OF AMERICA
NUCLEAR REGULATORY COMMISSION

In the Matter of PACIFIC GAS AND ELECTRIC COMPANY	Docket No. 50-275 Facility Operating License No. DPR-80
Diablo Canyon Power Plant Units 1 and 2	Docket No. 50-323 Facility Operating License No. DPR-82

AFFIDAVIT

Lawrence F. Womack, of lawful age, first being duly sworn upon oath states that he is Vice President, Nuclear Services of Pacific Gas and Electric Company; that he is familiar with the content thereof; that he has executed this supplemental response to additional NRC questions regarding License Amendment Request 02-03, "Spent Fuel Cask Handling" on behalf of said company with full power and authority to do so; and that the facts stated therein are true and correct to the best of his knowledge, information, and belief.

Lawrence F. Womack
Vice President Nuclear Services

Subscribed and sworn to before me this 25th day of April 2003.

Notary Public
State of California
County of San Luis Obispo

SANDRA EATHERLY
Commission # 1225422
Notary Public - California
San Luis Obispo County
My Comm. Expires Jul 18, 2003

PG&E Response to NRC Request for Additional Information Regarding License Amendment Request 02-03, "Spent Fuel Cask Handling"

1.0 Design and Operation

Question 1-1

The proposed LAR requires revisions to plant procedures covering the handling of heavy loads. What procedures need to be revised and updated to implement the transfer cask/MPC operation? What training if any will be conducted to ensure personnel understand the new procedures and when will the training be completed? Additionally, if any other procedures require revision what procedures will be revised and what training will be conducted and when?

PG&E Response to Question 1-1

LAR Section 2.0 briefly explained the various groups of documents affected by implementation of cask handling in the fuel handling building/auxiliary building (FHB/AB). Procedures and training are also described in overall terms as implemented by the DCPP Control of Heavy Loads Program in LAR Section 4.2.2. It is anticipated that the following procedures would be revised after approval and implementation of required design documentation:

(1) Inter-Departmental Administrative Procedure (IDAP) MA1.ID11, "Rigging and Load Handling." This procedure implements administrative controls on overhead heavy load handling in accordance with the DCPP Control of Heavy Loads Program commitments. This procedure would be revised to extend the bounds of the Program by adding rigging and load handling requirements to include the protection of nuclear fuel in the dry cask storage system at all times with regards to overhead load handling.

(2) IDAP MA1.ID14, "Plant Crane Operating Restrictions." This procedure implements administrative controls on overhead crane heavy load handling in accordance with the DCPP Control of Heavy Loads Program. Additional restrictions on the FHB crane operations would be imposed in order to preclude unrelated heavy load handling above the loaded dry cask storage system when located in the FHB/AB receiving/shipping area (RSA), cask washdown area (CWA), and cask recess area (CRA). In addition, the Diablo Canyon ISFSI cask transfer facility and storage pad exclusion areas depicted in LAR Figure 10 would be added to this procedure to control non-ISFSI related load handling operations in these areas. Upon approval of this LAR, the operating restriction on the FHB crane for the spent fuel cask exclusion zone would be removed. Explanation of the spent fuel cask exclusion zone as described in LAR Sections 2 and 3 is provided at the end of this response question.

(3) Surveillance Test Procedure (STP) M-43, "Fuel Handling Building Crane Interlock Verification." This procedure provides instructions for verifying the operability of the redundant interlock systems that prevent movement of the FHB crane over areas above the Spent Fuel Pools (SFPs) (except for the cask loading areas). The current interlock settings allow the FHB crane to be positioned above the cask handling area of the Unit 1 and Unit 2 SFPs. These settings will be reviewed in conjunction with completion of the detailed design of the cask handling modifications, and interlock adjustments will be made if appropriate, consistent with the change description in the LAR and as described in the DCPP Final Safety Analysis Report (FSAR) Update. Successful completion of STP M-43 is required after adjustments and within 31 days prior to any load handling operation by the FHB crane in the SFP area of Unit 1 or Unit 2. This procedure (or another STP) will also contain the instructions to calibrate and test the load sensing components (load cells) on the FHB crane and auxiliary lift.

(4) Mechanical Maintenance Procedure (MP) M-50.3 "Overhead, Gantry and Mobile Crane Inspection, Testing and Maintenance." This procedure provides inspection, testing and maintenance instructions for plant cranes including the FHB crane. Additional specific instructions for inspecting, testing and maintaining the auxiliary lift will be added to this procedure.

(5) MP M-50.4 "Fuel Handling Building Crane Operation and Moveable Wall Relocation." This procedure provides operating instructions specific to the FHB crane and the moveable walls that separate the Unit 1 and Unit 2 SFPs from the hot machine shop. Additional specific instructions for operating the auxiliary lift will be added to this procedure.

(6) Aside from operating procedures to load the contents of the dry cask storage system, a new maintenance procedure (or procedures) will be created that address load handling of the cask/MPC in the FHB/AB and up to and including placement at the ISFSI storage pad. This procedure will address all applicable heavy load handling topical areas and will require Plant Staff Review Committee approval in accordance with DCPP Control of Heavy Loads Program commitments. The current cask handling maintenance procedure (MP M-50.10) based on the never-used, originally-licensed spent fuel shipping cask technology, has been placed on administrative hold pending an authorized plant design change vehicle for dry cask storage system implementation.

(7) Operating Procedure (OP) series B-8 are currently used to assure plant conditions necessary to handle nuclear fuel assemblies. A new subset of operating procedures will be created to assure plant conditions necessary to load (or unload) the dry cask storage system contents. For example, under

these procedures the chemistry conditions of the SFP water or water used to reflood the MPC are sampled and verified as a prerequisite prior to fuel movement to load or unload the MPC, respectively; the fuel assembly movement sequence is prescribed to load fuel assemblies into proper locations in the MPC; the FHB radiation monitors are managed during cask handling to preclude inadvertent safeguards actuation of the FHB heating, ventilation, and air conditioning (HVAC) system; and other interfaces necessary for successful operation of the dry cask storage system from the SFP to the ISFSI storage pad.

(8) Security Procedures will be revised as applicable to support use of the dry cask storage system at the plant site.

(9) Fire Protection Procedures will be revised to control combustible materials as applicable to support use of the dry cask storage system at the plant site.

Training for handling of the cask/MPC will include instruction on the proper operation of all new or modified load handling equipment, heavy load exclusion areas, safe load paths and equipment testing requirements. This training will be completed prior to any cask/MPC handling operation inside the FHB/AB. Specific cask handling task qualifications for crane operators and riggers-in-charge will be established and field proven during the dry run tests that are performed prior to first loading of the dry cask storage system.

Affected plant procedures and training requirements are identified, coordinated and scheduled as part of the Diablo Canyon modification control process and completed prior to start-up of the modified plant configuration.

Spent Fuel Cask Exclusion Zone Description

There are two commonly discussed "exclusion" areas or zones in the SFP area of the FHB/AB. The exclusion zone to be eliminated, is associated with the requirement to verify there is no spent fuel within storage rack regions depicted in FSAR Update, Figure 9.1-6 as "spent fuel cask exclusion zones," before a spent fuel cask can be moved north beyond Column line $12^{\underline{9}}$ or South beyond column line $23^{\underline{1}}$. This requirement was in DCPP Technical Specification 3.9.13 until it was relocated to FSAR Update, Section 9.1.2.3.1 as part of License Amendments 135/135. Figure 1-1-1 depicts the Unit 1 configuration of the zone as excerpted from the FSAR Update figure. Note the striped storage rack modules adjacent to the cask recess area ("cask pit"). This zone restriction is currently implemented by a specific provision under FHB crane operating restrictions in IDAP MA1.ID14. Figure 1-1-2 depicts the Unit 1 configuration of the area as excerpted from the FSAR Update figure. Note that the cask is excluded north beyond Column line $12^{\underline{9}}$ when fuel is present in the zone. Upon approval of this LAR, the restriction will be removed and nuclear fuel may be present in these storage

rack locations during cask handling operations. The response to NRC Question 3-2 discusses the basis for elimination of the spent fuel cask exclusion zone.

The second common reference is the Heavy Load Exclusion Area, defined in IDAP MA1.ID14, which precludes movement of all non-spent fuel cask heavy loads over any area of the SFP except the cask loading area. This LAR does not change the bases or implementation of the heavy loads exclusion area over the SFP. In fact, as discussed elsewhere in the LAR and this response, exclusion areas will be expanded and added to account for the additional plant site locations where spent fuel will be present when ISFSI operations commence to preclude handling heavy loads over spent fuel in the dry cask storage system.

Question 1-2

What is the maximum estimated load to be lifted with this new crane configuration (i.e., with the auxiliary lift) including the weights of various lifting devices?

PG&E Response to Question 1-2

As described in Section 4.2.1 of the LAR, the auxiliary lift does not lift significant load under normal load handling operations. All normal lifting and load handling of the loaded transfer cask is performed with the main hoist. When used during selected load handling operations, the auxiliary lift is present for redundancy - to retain and hold the load from the main hoist upon a load carrying failure of the main hoist system making a load drop event non-credible. The auxiliary lift may be used alone for limited vertical lifting and lowering of the load after loss of main hoist function (i.e., emergency conditions) to move the load away from plant structures, systems or components, or to set the load down, to facilitate restoration of the main hoist.

The 128-ton rated capacity of the auxiliary lift is based on the nominal 125-ton weight of the loaded transfer cask, transfer cask lift yoke, extension links and slings, and 3 tons for the main hook, lower block and wire rope. The maximum load to be lifted with the main hoist is 125 tons. The maximum static load to be carried by the auxiliary lift upon a load carrying failure of the main hoist is 128 tons.

Question 1-3

Under normal operational conditions the combined weight of the trolley, auxiliary lift, and the crane at full rated load should be included in the design of the bridge. Demonstrate that the crane bridge and its supporting structure is adequate to support the new crane configuration (provide any assumptions used in your calculation and a summary of the results compared to the design allowables for DCPP FHB/AB).

PG&E Response to Question 1-3

The structural load path from the point of attachment of the auxiliary lift at the top block of the FHB crane trolley to the anchorage of the FHB steel superstructure was evaluated for each design basis loading condition and the plant seismic margin assessment spectra (i.e., Long Term Seismic Program (LTSP)). The auxiliary lift applies its loading to the trolley in essentially the same location on the trolley as the main hoist. The auxiliary lift design also suspends its load similar to the main hoist (i.e., analytically, a pendulum). Therefore, crane and structural analyses of record (reference FSAR Update Section 3.8.2.1) were re-evaluated with loading (a 10-ton additional dead load accounting for the auxiliary lift weight for the crane and FHB building seismic dynamic analyses with 125-ton load on main hoist, and a 187.5-ton bounding impact load to the trolley from load transfer to the auxiliary lift, for the crane and building static structural analyses) of the auxiliary lift configuration to determine the following results for the conventional, truss-roof, column and beam FHB steel structure and FHB crane depicted in LAR Figure 8. The results of re-evaluating the bounding local and global stresses on the FHB crane and structure are summarized in Table 1-3-1.

Seismic margin assessment of the auxiliary lift determined a minimum capacity to demand ratio of 1.05.

All stresses are within design allowables, using the same assumptions, methodology, and criteria of the licensed analysis (FSAR Update, Section 3.8.2.1). The seismic margin assessment capacity to demand ratio remains within its program criteria. Therefore, the crane bridge and supporting structure is adequate to support the new crane configuration.

Question 1-4

The auxiliary lift provides the overhead handling system with redundancy when used in heavy load handling operations. However, the submittal does not describe the design, testing, or inspection criteria for the auxiliary lift. Provide the design, testing, and inspection criteria applicable to the auxiliary lift and a description of the proof testing to completed at the manufacturers facility on the auxiliary lift to verify its ability to perform its intended function prior to the checking and testing performed at the place of installation.

PG&E Response to Question 1-4

The auxiliary lift structure and rigging is added to the crane to increase the reliability of the main hoist for selected load handling operations requiring safe crane operation. The lift and rigging meet the guidance of NUREG-0612, Section 5.1.1 in accordance with the DCPP Control of Heavy Loads Program.

The lift is designed to the same structural code as the crane, AISE Standard No. 6 (Tentative) May 1, 1969. The lift was designed using AISE load combination S.2.J(I): DL + LL + Vertical Impact Load. Due to the emergency nature of the conditions by which the auxiliary lift operates (load transfer), basic allowable stresses in the lift are increased by a factor of 1.5 similar to crane collision or main hoist pullout (i.e., two-block). The auxiliary lift acts only under emergency conditions and not under repeated demand, thus cyclical loading factors are not applicable. A vertical impact factor determined to be a maximum of 36 percent of the 128-ton load Live Load is added to the 10-ton auxiliary lift Dead Load and 128-ton Live Load and used to account for the dynamic transfer of the load from the main hoist system to the auxiliary lift, in accordance with PG&E's NUREG-0612 Crane Design commitments (i.e.,(within 15 to 50 percent of lifted load per AISE No. 6-1969 and CMAA-70-1975).

A minimum overall safety factor of greater than 2 to yield is used throughout the structure of the auxiliary lift. The minimum factor of safety reported from the manufacturer for the load bearing components of each screw jack assembly of the lift is 7 to yield and 9 to ultimate. The electro-mechanical controls of the lift will be incorporated into the upgraded control systems of the crane using applicable provisions of ASME B30.2, CMAA-70 and National Electrical Code per the DCPP Control of Heavy Loads Program commitments.

The rigging between the auxiliary lift and transfer cask lift yoke is designed in accordance with applicable provisions of ASME B30.9 for the slings and ANSI N14.6 for the steel extension links (see Figure 1-4-1) used only for handling between the CWA and RSA locations. The rigid extension links (approx. 1,800 lb. ea.) are used in series with each sling from the auxiliary lift lifting beam to allow the sling to control the vertical displacement of the load during load transfer. Since the rigging to the cask lifting yoke is not redundant, a 10-to-1 factor of safety was used to select the slings per NUREG-0612 guidance, and the extension links are designed as special lifting devices per ANSI N14.6.

Inspection and testing of the auxiliary lift will be performed in accordance with the provisions of ASME B30.2 as supplemented by CMAA-70 per DCPP Control of Heavy Loads Program commitments.

Inspection and certification testing of the rigging and special lifting device extension links will be conducted using the provisions of ASME B30.9 and ANSI N14.6 as applicable per DCPP Control of Heavy Loads Program commitments. Specifically for the auxiliary lift, an impact proof test of the auxiliary lift structure simulating a load transfer condition followed by a standard 125 percent static proof load test will be performed prior to installation on the FHB crane. Once installed, a customary 125 percent static load test of the main hoist and the auxiliary lift, independently, would be performed.

Question 1-5

Although the original crane design was described in the December 5, 1984, NUREG-0612 submittal, describe how the auxiliary lift is design to move in the horizontal and vertical direction with respect to the crane bridge and trolley?

PG&E Response to Question 1-5

The auxiliary lift is an integral part of the crane trolley and moves horizontally with the crane trolley. Thus, east-west horizontal movement is accomplished by trolley movement along the girders of the FHB crane. North-south horizontal movement is accomplished by bridge movement along the FHB structure runway. Vertical movement of auxiliary lift lifting beam (approximately 96 inches) is provided by the rotation of the screw jacks. Coordination of the main hoist and auxiliary lift vertical movement is further described in response to NRC Question 1-6. During cask handling operations, the upgraded control system design of the FHB crane will be capable of prohibiting simultaneous, multi-axis load movement. One exception is the upending/downending operation of the transfer cask in the RSA on the cask transport frame where simultaneous trolley and main hoist operation is necessary.

The auxiliary lift is structurally attached to the trolley using the main hoist top block pin that also supports the main hoist sheaves.

See enclosed sketches of the trolley and auxiliary lift (Figures 1-5-1 and 1-5-2).

Question 1-6

The submittal indicates that the rigging between the auxiliary lift and the cask lift yoke is designed to limit excessive vertical travel during load transfer to control impact loading on the lift. Describe how the rigging between the auxiliary lift and the cask lift yoke operates to mitigate the effects of dynamic loading during load transfer from a single-failure in the main hoist cask lift yoke.

PG&E Response to Question 1-6

The transfer cask lift yoke assembly is designed in accordance with ANSI N14.6-1993 as a special lifting device for Critical Lifts. A failure of this lifting device is extremely unlikely and need not be postulated, in accordance with NUREG 0612. Therefore, a "single-failure in the main hoist cask lift yoke" is not a credible failure. A failure of the crane main hoist system is postulated, and the function of the rigging is described below. LAR Section 4.2.1 describes the operation of the auxiliary lift with respect to the main hoist. The auxiliary lift follows the vertical travel of the main hoist to maintain a slight preload on the interconnecting rigging. During load transfer from the main hoist, the rigging elongates to limit the effects of dynamic loading, while at the same time, limiting vertical displacement of the load. Vertical positioning of the auxiliary lift is

controlled by comparison processing of instrument signals (load cells) from the crane main hoist control system and the auxiliary lift screw jack control system. The control system is designed such that any failure of its functions is annunciated to the crane operator and results in fail-safe modes in accordance with the crane control system design features of codes and standards cited in NUREG-0612, Section 5.1.1(7). The vertical lifting or lowering speeds during auxiliary lift use are typically 10 percent of the base operating speed of the main hoist. This allows the crane operator time to take action to stop all movement if abnormal crane operation were apparent.

Question 1-7

The LAR states that the auxiliary lift is a lifting beam suspended from two 100-ton screw jacks supported by a removable beam pinned to a yoke assembly that is attached to the crane trolley. In addition, the auxiliary lift will retain and hold the load from the main hoist upon failure of the main hoist system and the auxiliary lift does not require seismic qualification. However, the main hoist of the crane is seismically qualified for all DCPP earthquakes at the full-rated load (125 tons). What is the total weight of the auxiliary lift, and demonstrate that the new configuration (trolley + auxiliary lift with full rated load) meets the UFSAR design allowables for the crane bridge and building superstructure under seismic loads (provide any assumptions used in your calculation and a summary of the results compared to the design allowables for DCPP) or provide justification for why this configuration should be excluded from such analysis?

PG&E Response to Question 1-7

The maximum nominal dead weight of the auxiliary lift is 10 tons. The crane trolley, bridge, and FHB/AB superstructure have been evaluated for this additional dead loading under all design basis loading conditions and the LTSP margin assessment spectra and found to be within design allowables as explained in the PG&E response to NRC Question 1-3 above. No new assumptions resulted from the re-evaluation of the applicable structural analyses.

Question 1-8

The submittal indicates that the impact limiter was designed based on utilizing the test data from the dynamic characterization of an AL-STAR impact limiter certified in Docket Number 71-9261. Moreover, the method of analysis is based on the correlations developed in the HI-STAR 100 transport certification program. The impact limiters used in support of the HI-STAR were provided to ensure the protection of the confinement boundary and the protection of the fuel within the overpack/cask/MPC configuration. The methodology is not concerned with the protection of other structures. In addition, the methodology considered the surface struck by the transportation configuration with impact limiters to be an unyielding surface. Is the surface of the FHB/AB an unyielding surface, if not what modifications to the methodology were made to support the drop analyses? Is the impact limiter designed to the same specifications as the impact

limiter for the HI-STAR (e.g., rigidity, material of construction, etc.)? What scaled test were performed using the impact limiter and what were the results and how were the results used to ensure that the structural integrity of the FHB/AB floor would be maintained following a drop from approximately 26 feet?

PG&E Response to Question 1-8

10 CFR 71 is concerned with the protection of the fuel and the package confinement (containment) boundary. The 10 CFR 71 requirement is to demonstrate by analysis and confirm by drop testing that the global decelerations of the cask are below the specified design basis limit for drop events onto an essentially non-yielding surface. The excellent agreement between the theoretical prediction and the test results serves to validate the theoretical method, thus permitting its applications in other drop analyses. Therefore, the same theoretical method can be employed to study drops onto surfaces that yield, since that extension simply adds another finite linear stiffness in series with the non-linear stiffness associated with the impact limiter.

The DCPP FHB/AB floor slab (the "target" of the drop) is not an unyielding surface and has a finite stiffness K_T. Consider the impact limiter as a non-linear spring K, a function of crush deformation, δ, that is in series with the finite foundation spring K_T. The effective spring rate at any crush deformation of the combined impact limiter/target is:

$$K_{eff} = \frac{K(\delta)}{1 + K(\delta)/K_T}$$

For an unyielding surface, the effective stiffness is the impact limiter stiffness; for a yielding target surface, the effective stiffness is less than that for an unyielding surface for a given crush deformation. Therefore, the presence of a flexible foundation serves to reduce the peak decelerations developed (since stiffer contact stiffness increases the instantaneous peak force). In the analysis of the drops in the FHB/AB, the computed target stiffness was large enough that its presence could be conservatively ignored in the computation of the peak force at the impact limiter/floor slab interface. However, the computed stiffnesses for the CRA, CWA, and the RSA were used in the Holtec load drop analysis. See response to NRC Question 3-1.

Section 2.7.1 and Appendix 2.H of the HI-STAR 100 Safety Analysis Report supporting the 10 CFR 71 certification of the HI-STAR cask for transportation (Holtec Report HI-951251, Revision 9, submitted in April, 2000) provide detailed information on impact limiter testing. This includes a description of the type of testing performed, results, and how the results confirm the design of the impact limiters and the inputs used to model the package in the drop analyses.

One-eighth scale model static tests were performed to confirm the validity of the force-crush (F-δ) curve used to represent the impact limiters in the dynamic models. One-quarter scale model dynamic drop tests were performed to meet the following acceptance criteria for four different drop orientations:

(1) Structural adequacy of the package is demonstrated.

(2) Rigid body decelerations remained below the design basis value.

(3) The impact limiters remain attached to the package.

The results of the tests confirmed that the impact limiters would perform as predicted in Holtec's dynamic drop simulation models for the full-sized package.

The impact limiter material is a commercial product that has been validated with scale model testing as part of HI-STAR transport licensing for drop weights and heights similar to those anticipated at DCPP in the FHB/AB. These tests confirmed that the predicted crush strength of the impact limiter material is accurate, and no additional testing is required. The DCPP impact limiter material will be manufactured to the same specifications as the transportation impact limiters for the HI-STAR transport cask, with the honeycomb geometry modified to produce a lower density, which ensures that the maximum crush deformation and the peak decelerations are maintained below the desired limits.

The results for maximum crush are used to size the height of the impact limiter to ensure that there is sufficient safety margin against a "bottoming out" of the impact limiter on the FHB/AB floor. The analytical result for the peak cask deceleration is directly transferred into a peak force on the FHB/AB floor slab. This peak force is then used as input loading in a separate structural calculation to demonstrate continued structural integrity of the floor slab at the impact site.

See the response to NRC Question 3-1 for further discussion of the FHB/AB analyses.

2.0 Load Movements

Question 2-1

The Diablo Canyon Power Plant (DCPP) license amendment request to revise the DCPP updated final safety analysis report (UFSAR) regarding its control of heavy loads program proposes to eliminate the spent fuel cask exclusion zone. The UFSAR restricts cask movement to the portion of the spent fuel pool which is over the cask recess area. The defense-in-depth approach within NUREG-0612, "Control of Heavy Loads at Nuclear Power Plants," states that despite the increase reliability of the overhead handling system licensees should (1) provide sufficient operator training, handling system design, load handling instructions, and equipment inspection to assure

reliable operation of the handling system; and (2) define safe load paths through procedures and operator training so that to the extent practical heavy loads avoid being carried over or near irradiated fuel or safe shutdown equipment. Provide your basis for eliminating the cask exclusion area? Demonstrate how the defense-in-depth philosophy described will be maintained through your cask handling operations supporting your proposed independent spent fuel storage installation (ISFSI).

PG&E Response to Question 2-1

For clarification, PG&E does not intend to handle a spent fuel cask over any area of the SFPs other than the cask recess area as depicted in DCPP FSAR Update, Figure 9.1-3. The DCPP Control of Heavy Loads Program prohibits movement of all heavy loads over the SFP fuel storage racks unless specifically authorized by written procedures reviewed and approved by the PSRC. This program requirement is implemented in plant administrative controls by a "Heavy Load Exclusion Area". PG&E will not move the cask over the spent fuel storage racks, and the exclusion area over the fuel will not be eliminated.

This LAR does propose to eliminate "the spent fuel cask exclusion zone", an area of the SFP where fuel was not to be allowed during future cask handling operation. See the discussion in Item (2) under the Response to NRC Question 1-1.

Following approval of this LAR, all overhead heavy load handling operations at DCPP will continue to be in full compliance with existing DCPP defense-in-depth NUREG-0612 commitments, as substantially enhanced by the crane modification and other changes described in this LAR. The defense-in-depth philosophy stated in the NRC Question 2-1 is embedded in the DCPP Control of Heavy Loads Program, which is used to evaluate, review, and approve all overhead heavy load handling operations in the Owner Controlled Area at DCPP.

Elimination of the spent fuel cask exclusion zone is based on the design and load drop analyses of the overhead load handling system and its interface with the SFP frame. This design is addressed in response to NRC Question 3-2 below. The overhead load handling system and SFP frame geometry is intentionally designed such that the transfer cask cannot adversely affect nuclear fuel assemblies placed in racks adjacent to the cask recess area which comprise the "spent fuel cask exclusion zone" proposed for elimination as previously described in response to NRC Question 1-1.

An operational sequence depicting the cask handling operations is presented in the enclosed Diablo Canyon ISFSI SAR Figure 5.1-1, which was previously submitted in PG&E Letter DIL-01-002 dated December 21, 2001 under Docket No. 72.26. Using LAR Figures 8 and 9 along with the sequence presented, provides a "pool to pad" map of cask handling operations.

Table 2-1-1 contains the defense in depth features provided for each load movement discussed above.

Question 2-2

DCPP proposes to use an auxiliary lift during the hoisting and lowering of the cask and MPC during cask handling operations. The submittal states that the auxiliary lift is capable of limited vertical lifting or lowering of the retained load to place the load in a safe configuration while the main hoist is restored to service. Define what is meant by a safe configuration? Describe the range of operation of the auxiliary lift during cask handling operations within the FHB/AB to included the hoisting and lowering into and out of the SFP.

PG&E Response to Question 2-2

Use of the auxiliary lift in parallel with the main hoist to increase load handling reliability thus precluding a load drop event is a safe load handling configuration.

Safe configuration as restated in the question above was meant to convey the capability of the auxiliary lift, following a load transfer condition from the main hoist, to reposition the load to a different plant location on the load path where restoration of the crane main hoist function would be more suitable. The plant location is safe based on satisfactory results from analyses of a postulated load drop, and safe to allow plant personnel access to the crane to effect restoration.

While the use of the auxiliary lift during selected cask handling operations provides the redundancy to assure a drop of the cask is not credible, it is prudent to provide additional defense-in-depth capability in the design of the lift to be able to move the cask away from the SFP to allow recovery from a load transfer condition. For example, were a transfer of load from the main hoist to occur while engaging the transfer cask into and out of the SFP frame, the auxiliary lift would initially retain the cask and may then be used to raise the transfer cask clear of the SFP frame for horizontal traverse away from the SFP if warranted. By then lowering and retaining the cask over the CWA restraint location, well away from the SFP area and structure, the ability of the cask to adversely affect fuel stored in the SFP is reduced, and main hoist restoration maintenance activities can begin over a more suitable floor surface beneath and away from the foreign materials exclusion area over and adjacent to the SFP.

For load handling of the transfer cask between the CWA restraint structure and the cask transport frame in the FHB/AB receiving/shipping area, the auxiliary lift is capable of lowering and retaining the cask on a proper surface at plant elevation 115 ft. as applicable until proper main hoist operation can be restored.

Both of these instances postulate situations under which the auxiliary lift is used alone to place the cask in a safer configuration, considering the scope of main hoist

restoration efforts, away from plant structures, systems and components while the main hoist is returned to service.

The auxiliary lift is designed for 96 inches of vertical travel to accommodate its use during selected cask handling operations. The length of travel is designed to allow the lift to follow the transfer cask load into or out of the SFP frame to allow the transfer cask to be engaged in the frame prior to removing, and remain engaged in the frame while installing, the auxiliary lift to preclude the possibility for any adverse interaction between the cask and the fuel stored in adjacent fuel storage racks. The vertical travel also allows the cask to be set down on the 115-ft. elevation and retained as explained above.

Refer to the response to NRC Question 2-1 for a complete summary of the cask handling process.

Question 2-3

What is the height the cask (empty and loaded) will be carried across the FHB/AB floor from the location adjacent to the spent fuel pool to the CWA? How did you determined the acceptability of the height of the lifted load between these two points?

PG&E Response to Question 2-3

The nominal carrying height of the cask over the SFP structure wall between the SFP frame and the CWA restraint location is approximately eighteen inches. This is measured from the bottom of the impact limiter shown in Figure 5 of the LAR to the Elevation 140-ft. surface shown in LAR Figure 6. This is based on a 12-inch projected height of the SFP frame anchorage structure above the adjacent floor elevation (140 ft.) plus an additional 6-inch clearance for load handling. Once this clearance was determined, the overall length of the load was checked to ensure there is enough headroom above the main hoist load block at top-of-lift to accommodate the vertical space beneath the trolley occupied by the auxiliary lift. Since the auxiliary lift is used for redundancy during this load handling operation, a drop of the cask during this operation was not postulated.

The height of the cask over the FHB/AB floor during movement to or from the receiving/shipping area (RSA) is covered in response to NRC Question 3-3. The auxiliary lift is used during this load handling operation, so a drop of the cask is not postulated.

Refer to the response to NRC Question 2-1 for a more complete summary of the cask handling process.

3.0 Load Drops

Question 3-1

Demonstrate that your load drop analyses for (1) a drop into the cask recess area of the SFP; (2) a drop onto the CWA; and (3) a drop or tipover when the transfer cask/MPC configuration is being upended or downended onto the transport frame meet the guidelines of NUREG-0612, Appendix A, "Analyses of Postulated Load Drops," giving special consideration to the general considerations and spent fuel cask drop analysis to ensure evaluation criteria I-IV of Section 5.1 of NUREG-0612 are not exceeded.

PG&E Response to Question 3-1

Based on the load handling process described in response to NRC Question 2-1 as evaluated in a PG&E calculation, "Control of Heavy Loads Evaluation of HI-STORM 100SA," three calculations were developed to consider load drops in the CRA in the SFP frame, CWA, and during downending of the transfer cask and cask transport frame in the FHB/AB RSA.

A PG&E calculation, "Cask Drop Analysis – Evaluation of Structural Targets in the Auxiliary Building" developed the slab stiffness for use in the Holtec drop analysis, investigated the impact surface drop response assuming no impact limiter, and evaluated the integrity of the SFP wall that receives lateral support from the CWA slab assuming the slab were damaged. The second, a Holtec calculation, "Structural Analysis of HI-TRAC-Vertical Drops and Tipover in Diablo Canyon Fuel Building," considers the impact of the drops on the impact limiter, transfer cask, MPC, fuel basket, and fuel. The Holtec calculation also develops the force time history of the impact limiter for the various drop scenarios for use in the last PG&E calculation, "Structural Evaluation of Target Slabs in the Aux. Building Subject to Postulated Drop of Cask with Impact Limiter". The conformance of these drop analyses with NUREG-0612 Section 5.1.2(4) guidance is summarized in Tables 3-1-1 and 3-1-2.

The following tables summarize each analysis:

Calculation	**PG&E Calculation 52.15.122, "Cask Drop Analysis – Evaluation of Structural Targets in the Auxiliary Building."**
Purpose	The purpose of this calculation is to: 1. Develop the upper bound stiffnesses for the Cask Recess Area (CRA), Cask Washdown Area (CWA) and Receiving Shipping Area (RSA) cask drop impact surfaces to be used in cask vendor load drop analyses; 2. Analyze the drop events in 1 above to determine if adequate capacity exists without crediting an impact limiter; and

Calculation	**PG&E Calculation 52.15.122, "Cask Drop Analysis – Evaluation of Structural Targets in the Auxiliary Building."**
	3. Conservatively analyze the complete loss of north-south lateral support diaphragm to the common SFP perimeter wall between the CWA and SFP (i.e., assume complete failure of elevation 115' slab in the CWA and RSA) for the effect on SFP structural integrity.
Assumptions, Key Input	1. Plant physical geometry and rock foundation properties are used. 2.A. CRA analysis 1. No impact limiter used for cask handling. 2. Cask drop is considered in vertical position. 3. Lowest SFP water level to maximizes air freefall velocity. 4. Local effect on slab considered. 5. Minimum specified material values are considered. 6. Kinematic viscosity of SFP water per BC-TOP-9A at 80°F. 7. All energy of the drop is assumed to be elastically absorbed by the rock spring. 8. Fully loaded cask weighing 260 kips. 9. Drop height of 47.5 ft. 2.B. CWA analysis 1. No impact limiter used for cask handling. 2. Cask drop is considered in vertical position. 3. Tested average material values are considered. 4. No credit taken for dynamic increase factors. 5. Fully loaded cask weighing 260 kips. 6. Two cases: Drop height of 1 ft. and 27 ft. 2.C. RSA analysis 1. No impact limiter used for cask handling. 2. Cask drop is considered in vertical position. 3. Tested average material values are considered. 4. No credit taken for dynamic increase factors. 5. Fully loaded cask weighing 260 kips. 6. Drop height of 1.5 ft. 3. SFP wall integrity 1. Tested average material values are considered. 2. Lateral contribution from CWA and RSA Slab diaphragm neglected. 3. Maximum water level in SFP for hydrostatic loads.
Methodology	1. Stiffness analyses The spring constant values for the slab on rock are obtained by methods in two different sources: Timoshenko and Goodier, "Theory of Elasticity," and Bechtel Topical Report BC-TOP-4,

Calculation	PG&E Calculation 52.15.122, "Cask Drop Analysis – Evaluation of Structural Targets in the Auxiliary Building."
	Rev. 4. For the slab analyses, the spring constant value is obtained by applying a concentrated unit load at the center of the slab and obtaining the corresponding deflection. This is consistent with standard engineering analytical practice used in previous plant analyses. 2. Slab analyses Analytical methodology is performed per PG&E Design Criteria Memorandum (DCM) C-58 which is based on criteria outlined in Bechtel Topical Report BC-TOP-9A, "Design of Structures for Missile Impact," Rev. 2 and ACI 349 per DCPP licensing bases. Concurrent seismic and LOCA loads are not considered in the drop load combinations per the DCPP Control of Heavy Loads Program licensing basis. 3. SFP wall integrity Wall capacity is determined using DCM C-58 criteria and tested average material properties. Concurrent seismic and LOCA loads are not considered in the drop load combinations per the DCPP Control of Heavy Loads Program licensing basis.
Results	1. Stiffnesses: CRA surface = 157,000 k/in CWA surface = 27,600 k/in RSA surface = 26,400 k/in. 2A. CRA surface The CRA slab is placed on a rock foundation. The analysis shows the dropped transfer cask does not exceed the capacity of the or rock foundation. The SFP stainless steel liner may be damaged, however the structural integrity of the concrete forming the SFP is maintained, preventing any uncontrolled leakage. 2.B. CWA surface Assuming a 1 foot drop height , the slab meets perforation/spalling criteria but fails energy absorption criteria. Assuming a 27-ft. drop height, the slab fails both perforation/spalling and energy absorption. Conclusion: Use of an impact limiter is required. 2.C. RSA surface Assuming a 1.5-ft. drop height , the slab meets perforation/spalling criteria but fails energy absorption criteria. Conclusion: Use of an impact limiter is required. (Note: since the impact limiter must be removed (by vendor design) in the CWA prior to movement onto the bottom shield of the cask

Calculation	PG&E Calculation 52.15.122, "Cask Drop Analysis – Evaluation of Structural Targets in the Auxiliary Building."
	transport frame in the RSA, cask drop is precluded by use of the auxiliary lift to improve the reliability of the main hoist during this load handling operation). 3. SFP wall integrity This analysis considered the impact of a cask drop in the CWA on the SFP wall. The calculation determined the normal operational loads (excluding seismic and seismic fuel storage rack impact effects) on the pool wall, and assessed the wall capacity, neglecting the diaphragm support provided by the CWA slabs. Conclusion: The SFP wall, in the absence of the washdown area slabs, was adequate for the expected loads. This is a very conservative assumption since the CWA drop analysis with impact limiter results in no damage (cask will not penetrate) to the CWA slab.

Calculation	Holtec International Calculation HI-2002506, "Structural Analysis of HI-TRAC - Vertical Drops and Tipover in Diablo Canyon Fuel Building."
Purpose	The purpose of this calculation is to: 1. Determine the impact force and force time history on the target surfaces for the CRA, CWA and RSA portions of the FHB/AB structure for input into PG&E Calculation 52.15.132; 2. Determine the impact force on the impact limiter, transfer cask, MPC, fuel basket, and fuel to support the 10 CFR 72 Diablo Canyon ISFSI site-specific licensing basis and shielding and fuel criticality concerns for this LAR; 3. Evaluate the trajectory (rotation from vertical) of the vertical cask drop to confirm negligible effects; and 4. Determine the MPC fuel basket mechanical damage and resulting criticality implications of a single fuel assembly drop onto the MPC during fuel movement to load or unload an MPC.
Assumptions, Input	VisualNastran 1. Fully loaded cask and contents and load block are modeled as rigid body. 2. The impact limiter force-crush behavior is per manufacturer's data modified by an experimentally-verified velocity dependent amplifier.

Calculation	**Holtec International Calculation HI-2002506, "Structural Analysis of HI-TRAC - Vertical Drops and Tipover in Diablo Canyon Fuel Building."**
	3. Target impact surface stiffness characteristics are considered. 4. Fluid drag, virtual and hydrodynamic effects are included in drop over CRA. 5. Hydrodynamic resistance in the gap between impact limiter and impact surface is neglected when the gap is less than 10 percent of the impact limiter diameter. 6. Energy dissipated by wave action when the cask pierces the SFP water surface is conservatively neglected. 7. For vertical rotation evaluation, instantaneous offset load to account for the crane block, reeving and lift yoke is applied. LS-DYNA 1. The transfer cask structural components behave as bilinear elastic-plastic materials. 2. The impact limiter bottom surface is fixed in the vertical direction to neglect any absorption underneath the impact limiter. 3. The loaded transfer cask is assumed to drop from the maximum carry height to maximize the impact energy. 4. The load block, wire rope and cask lift yoke are on the top of the transfer cask during the entire drop event. 5. The impact limiter honeycomb material crush strength may vary ± 15 percent about its nominal value. To conservatively evaluate the structural integrity of the cask components and the maximum force time histories, the drop simulation is based on the upper bound honeycomb crush strength. The lower bound crush strength is used to examine the maximum crush depth of the limiters.
Methodology	VisualNastran Desktop 2001 is used for the determination of the cask velocity and orientation just prior to impact. The impact velocity is input into LS-DYNA Version 950 to determine time history results of deceleration, stress and strain.
Results	Analyses 1 and 2: CRA analysis

Calculation	Holtec International Calculation HI-2002506, "Structural Analysis of HI-TRAC - Vertical Drops and Tipover in Diablo Canyon Fuel Building."
	The drop analysis in the cask recess area yielded a maximum fuel deceleration of 35.59g. CWA analysis The CWA drop result was fuel deceleration of 33.63g. RSA analysis The tipover analysis results in 56.56g at the top of the fuel and 59.72g at the center of the MPC top surface. Since the deceleration of the Holtec HI-TRAC transfer cask is licensed to 45g by the Holtec 10 CFR Part 72 FSAR but capable of higher loading, further analysis was performed. This analysis determined the maximum stress on the inner shell, outer shell and the flanges of the transfer cask. The stress on the inner shell will result in a slight plastic strain (.00041 inches) that is negligibly small and would not result in a different flow configuration (cooling) or prevent retrievability of the MPC. All vertical drop analyses demonstrated no shielding concerns, no change of reactivity configuration of the fuel basket in the MPC and no overall geometry change to the transfer cask and the MPC. Analysis 3: The maximum cask rotation was determined to be 2.57 degrees. Analysis 4: A postulated fuel assembly drop onto the top of the fuel basket in the MPC would result in minor plastic deformation to a depth of 4.44 inches that will not affect the reactivity configuration of the basket or the active fuel region of assemblies located in the basket.

Calculation	PG&E Calculation 52.15.132, "Structural Evaluation of Target Slabs in the Aux. Building Subject to Postulated Drop of Cask with Impact Limiter."
Scope	This calculation: 1. Analyzed the cask drop impacted surfaces of the FHB/AB in the CRA, CWA and RSA to determine if adequate capacity exists crediting an impact limiter; and

Calculation	**PG&E Calculation 52.15.132, "Structural Evaluation of Target Slabs in the Aux. Building Subject to Postulated Drop of Cask with Impact Limiter."**
	2. Determined exact physical location of the cask in the CWA seismic restraint structure and also the position of the cask transport frame impact limiter for the cask downending (tipover drop event) operation in the RSA.
Assumptions, Input	1. Input forces from and assumptions for configuration of the cask are extracted from the Holtec Calculation HI-2002506. 2. External visual configuration of concrete wall supporting the CWA and RSA slabs was verified using as-built lift drawings and plant walk down inspection.
Methodology	1. With the use of impact limiters, the impact energy is considered to be absorbed entirely by the crushing of the impact limiter. Therefore, the structural elements resisting the reaction from the impact limiter are subject to the impact force generated by the crushing of the impact limiter and a multiplier associated with the dynamic nature of the loading, called the Dynamic Load Factor. The force time histories of the impacts are provided, excluding the DLF, since the DLF is a function of crush duration as well as the natural frequency of the structural target. The DLF is calculated using standard methods (Biggs, Introduction to Structural Dynamics, 1964) and was 2.0. 2. Analytical methodology is performed per PG&E Design Criteria Memorandum (DCM) C-58 which is based on criteria outlined in Bechtel Topical Report BC-TOP-9A, "Design of Structures for Missile Impact," Rev. 2 and ACI 349 per DCPP licensing bases. Concurrent seismic and LOCA loads are not considered in the drop load combinations per the DCPP Control of Heavy Loads Program licensing basis.
Results	CRA analysis Capacity is 39,400 k. Demand is 18,500 k. CWA analysis Slab bounding capacity is 75g. Bounding demand is 64g. Wall capacity is 50g. Demand is 50g. However, demand is based on upper bound crush strength (median and lower bound impact forces will be less). Therefore, wall meets design basis criteria. Foundation capacity is 118g. Demand is 50g. RSA analysis Slab capacity is 7,800 k. Demand is 2,021 k. Wall capacity is 5,300 k. Demand is 2,021k.

Question 3-2

Once the cask is filled, the MPC lid lowered, and the lid retention stops engaged on the MPC, the MPC/transfer cask is lifted out of the spent fuel pool. Postulating a drop of a loaded MPC/transfer cask prior to reattaching the auxiliary lift, at the highest point, and under the worst case scenario where the MPC/transfer cask configuration lands on the SFP frame and tips over onto fuel will the SFP remain subcritical, will the fuel rods be prevented from leaving the MPC once it impacts upon stored fuel or the SFP liner and comes to rest, and will the structural integrity of the SFP liner be maintained?

PG&E Response to Question 3-2

A drop of the transfer cask onto nuclear fuel as postulated in NRC Question 3-2 above is not possible due to the lateral support and guidance provided by the SFP frame and transfer cask bumpers, and the height of the cask at top of lift prior to engaging the auxiliary lift with respect to the pool frame and the inability of the cask to overturn out of the top of the SFP frame as it falls back within the frame into the cask recess area of the pool.

Load drop analyses of the loaded transfer cask assembly (reference Holtec International Calculation HI-2002506) determined that the trajectory of the load drop of the loaded transfer cask in the SFP frame will not adversely affect fuel stored in the pool. The Holtec calculation conservatively assumes an instantaneous off-center load applied at the top of the transfer cask representing the lifting device and crane block and rigging, and no credit for guidance from the SFP frame. The calculation concluded a maximum rotation of 2.57 degrees over the 47 ft. of combined air and submerged freefall into the cask recess area. See also the Response to NRC Question 3-1 for additional details of this analysis.

In order to assure that there is no rotation of the cask induced by rigging from the auxiliary lift, load handling procedures for use of the auxiliary lift will require simultaneous installation or removal of each sling to the auxiliary lift.

To provide additional defense-in-depth, the vertical travel of the auxiliary lift is designed to allow the bottom transfer cask bumpers shown in LAR Figure 5 to be fully engaged (approx. 75 inches of the 234 inches overall length of the transfer cask) in the SFP frame structure (see Detail 1 of LAR Figure 6) prior to release or installation of the auxiliary lift rigging.

Refer to the load handling sequence discussed in response to NRC Question 2-1 above for further detail.

Question 3-3

What is the height of the unloaded cask above the fuel handling building(FHB)/auxiliary building (AB) floor when moving the unloaded cask from the transporter to the cask washdown area (CWA). Is the same lift height used when moving a fully loaded sealed cask from the CWA to the transporter? Is the impact limiter attached during this move? With and without the impact limiter attached, considering a load drop prior to placement upon the cask transporter what is the calculated deceleration of the cask? The design deceleration of 45g is for the protection of the fuel inside the cask and multi-purpose canister (MPC) and not the Class I FHB/AB floors. Postulating a drop of and unloaded cask during movement to the CWA without an impact limiter attached, what is the force on the FHB/AB slab and will the structural integrity of the Class I structure be maintained following this drop? Considering the same drop with a fully loaded cask, while moving from the CWA, considering the calculated design deceleration from the drop, will the structural integrity of the slab be maintained?

PG&E Response to Question 3-3

Although not explicitly described in LAR Section 3.2, "Transfer Cask/MPC Loading Process" or LAR Section 4.3.1, "Drops and Tipovers", PG&E will use the crane main hoist and auxiliary lift (described in LAR Section 4.2.1) when moving the empty transfer cask from the cask transport frame in the receiving/shipping area (RSA) to the CWA (Note: the cask transporter cannot be driven into the building). The use of the auxiliary lift, which provides redundant load carrying capability to the existing crane main hoist, during the subject cask move precludes a drop onto the floor. Since both the empty transfer cask move and the loaded transfer cask move between the CWA and the cask transport frame in the RSA are performed with the auxiliary lift installed, the lift height will be approximately 36 in. The impact limiter is not attached to the bottom of the transfer cask during the subject moves to facilitate removal and installation onto the bottom shield of the cask transport frame. Because the use of the crane auxiliary lift precludes a cask drop onto the floor for the subject cask movements, a deceleration value has not been calculated for a drop of the transfer cask, with or without an impact limiter, and no calculations were performed to show the structural adequacy of the floor slabs in the CWA or RSA for the drop of an empty or loaded transfer cask. Refer to the response to NRC Question 3-1 for FHB/AB drop analyses and acceptance criteria for the prescribed load path B in LAR Figure 9.

Question 3-4

Since the CWA seismic restraint is attached to the FHB/AB structure, a drop of the transfer cask/MPC could fall onto the CWA seismic restraint and then onto the FHB/AB floor. Demonstrate that the fall of the transfer cask/MPC onto the seismic restraint and then the FHB/AB floor would result in acceptable consequences?

PG&E Response to Question 3-4

The auxiliary lift is disconnected from the cask yoke assembly only when the cask is located directly over the CWA restraint structure centerline location as prescribed by the load path B in LAR Figure 9. Motion analysis of the transfer cask assembly (see response to NRC Question 3-2) during the postulated drop beginning in air and ending in water over the SFP cask recess area, assuming no guidance from the SFP frame and instantaneous, induced tipping resulting from the attached cask rigging weight offset at the moment of fall, determined less than 3 degrees of vertical rotation before contact of the impact limiter with the FHB/AB pool floor slab at elevation 94.5 ft.. In the case of the CWA as explained in LAR Section 4.3.1.1, the drop height is 40% closer to the impact surface and the medium is open air. Thus, in the approximately 0.7 of a second the cask takes to impact the FHB/AB floor at 115 ft., there are no induced or applied forces present that are capable of rotating the cask beyond its center of gravity to create a tipover event. For defense-in-depth, there is several feet of clearance between the transfer cask assembly and the CWA restraint structure to accommodate the above maximum rotation. Therefore, the trajectory of the drop does not result in unacceptable consequences as concluded in LAR Section 4.3.1.1.

In order to assure that there is no rotation of the cask induced by rigging from the auxiliary lift, load handling procedures for use of the auxiliary lift will require simultaneous installation or removal of each sling to the auxiliary lift.

Question 3-5

Postulating a fully loaded transfer cask/MPC drop with the auxiliary lift detached for lowering the loaded transfer cask/MPC once it is clear of the spent fuel pool wall. This load would drop onto the FHB/AB floor, which acts as a ceiling separating the spent fuel pool pit pumps and other equipment from cask handling activities. What is the maximum force imparted to the FHB/AB floor using the criteria in Appendix A of NUREG-0612? Assuming the floor is elastic and not an unyielding surface would the cask penetrate the floor and damage the equipment below or cause spalling that could cause the failure of the spent fuel pool equipment? And is any of the equipment below this floor used to support the cooling function of the spent fuel pool cooling system?

PG&E Response to Question 3-5

At the direction of PG&E, Holtec performed a load drop analysis to verify the structural integrity of the multi-purpose canister, fuel assemblies and transfer cask and to determine the maximum impact force on the CWA floor slab. This analysis is summarized in Response to NRC Question 3-1 above. As allowed by the guidance in NUREG-0612 Appendix A, Section 3, the load drop analysis did credit an impact limiter attached to the bottom of the transfer cask during the postulated drop. The load drop analysis also considered the CWA floor slab stiffness. The maximum force imparted onto the floor in the CWA was 8,836,481 lb (approximately 34g). PG&E performed

calculations that located an area on the CWA floor slab that could withstand the impact force from the drop without penetrating the floor (see Response to NRC Question 3-1). The cask seismic restraint is centered on the acceptable location for the load drop onto the CWA floor slab. Beneath the CWA floor slab at the location of the CWA cask seismic restraint structure and postulated load drop location is a reinforced concrete support wall intersection formed in an "L-shape" configuration. The floor slab, underlying walls and the building foundation slab (at the base of the supporting walls) absorb the load drop impact force without exceeding their capacities, but likely with some localized spalling. The SFP cooling system equipment is located below the CWA floor slab and does function to support normal cooling system operation. In the unlikely event that the SFP cooling system piping is damaged, the piping system has anti-siphon features to prevent gravity draining of the SFP. If the cooling flow motive force fails, natural pool surface cooling would maintain the water temperature at or below the boiling point. In either loss of SFP cooling event, a demineralized makeup water source, qualified to nuclear safety-related standards, is provided to ensure that the water level in the SFP can be maintained (ref. DCPP FSAR Update, Section 9.1.3.3.1).

NRC Question 3-6

Please provide a criticality analysis of a cask drop from the worst angle over the spent fuel pool. State whether there is enough boron in the pool to maintain 5 percent subcriticality margin given damage to fuel in the SFP.

PG&E Response:

The response to this question was provided to NRC under PG&E Letter DCL-03-020, dated February 28, 2003 (ref. NRC Accession No. ML030640449).

LIST OF TABLES

TABLE NO.	TITLE
1-3-1	FHB Crane and Structure Results Summary (Bounding of Local and Global Stresses)
2-1-1	Heavy Load Handling Operations Assessment (Bounding Cask Load)
3-1-1	DCPP Postulated Cask Drop Analyses Conformance Matrix
3-1-2	DCPP Postulated Cask Drop Analyses Results Matrix

TABLE

1-3-1

TABLE 1-3-1

FHB Crane and Structure Results Summary
(Bounding of Local and Global Stresses)

Structural Member			Limiting Condition (design calculated stress/allowable stress)		
Structure (FHB in SFP area)	Member	AISE No. 6 Case	DE	DDE	HE
FHB	Braces	N/A	0.70	1.0	1.0
FHB	Roof Chords	N/A	0.68	0.69	0.84
FHB	Lateral North-South beams	N/A	0.50	0.51	0.51
FHB	Vertical columns	N/A	0.87	0.77	0.91
FHB	Base anchorage (axial tension)	N/A	0.38	0.84	0.90
FHB	Base anchorage (lateral shear)	N/A	0.47	0.58	0.57
FHB	Base anchorage (lateral shear)	N/A	0.76	0.67	0.76
FHB	Runway girder shear	N/A	0.36	0.47	0.96
FHB Crane	Bridge Girder	0.95	0.67	0.78	0.84
FHB Crane	Trolley Box Section	0.52	0.16	0.16	0.61
FHB Crane	Trolley Beam	0.93	-	-	1.0

TABLE

2-1-1

Heavy Load Handling Operations Assessment (Bounding Cask Load)

NUREG-0612 Section 5.1.1 Guidance or Defense-in-depth feature	Handling Operation: Upending or downending in the RSA	Handling Operation: Horizontal movement between the RSA and CWA	Handling Operation: Vertical movement over the CWA	Handling Operation: Horizontal movement between the CWA and CRA over elevation 140' SFP wall	Handling Operation: Vertical movement over the CRA
(1) Safe load paths	Load path "B" as depicted in LAR Figure 9.	Load path "B" as depicted in LAR Figure 9. No credible drop.	Load path "B" as depicted in LAR Figure 9.	Load path "B" as depicted in LAR Figure 9. No credible drop.	Load path "B" as depicted in LAR Figure 9.
(2) Procedures	Specific load handling instructions provided in procedure.	Specific load handling instructions provided in procedure.	Specific load handling instructions provided in procedure.	Specific load handling instructions provided in procedure.	Specific load handling instructions provided in procedure.
(3) Crane Operators	Cask Handling Qualification required.	Cask Handling Qualification required.	Cask Handling Qualification required.	Cask Handling Qualification required.	Cask Handling Qualification required.
(4) Special lifting devices	(1) Transfer Cask lifting yoke.	(1) Transfer Cask lifting yoke, (2) Extension links (see Figure 1-4-1).	(1) Transfer Cask lifting yoke.	(1) Transfer Cask lifting yoke.	(1) Transfer Cask lifting yoke.
(5) General lifting devices	None.	Slings between auxiliary lift and extension links pinned to transfer cask lifting yoke.	None.	Slings between auxiliary lift and transfer cask lifting yoke.	Slings between auxiliary lift and transfer cask lifting yoke before cask bottom guides protrude from top of SFP frame structure.
(6) Crane inspection, testing, and maintenance	FHB Crane is a Category 1 Heavy Load Handling System which specifies the most stringent inspection, testing and maintenance requirements.	FHB Crane is a Category 1 Heavy Load Handling System which specifies the most stringent inspection, testing and maintenance requirements.	FHB Crane is a Category 1 Heavy Load Handling System which specifies the most stringent inspection, testing and maintenance requirements.	FHB Crane is a Category 1 Heavy Load Handling System which specifies the most stringent inspection, testing and maintenance requirements.	FHB Crane is a Category 1 Heavy Load Handling System which specifies the most stringent inspection, testing and maintenance requirements.
(7) Crane design	FHB Crane design reviewed and accepted by NRC in response to Generic Letter of 12/22/1980 (NUREG-0612).	FHB Crane design reviewed and accepted by NRC in response to Generic Letter of 12/22/1980 (NUREG-0612).	FHB Crane design reviewed and accepted by NRC in response to Generic Letter of 12/22/1980 (NUREG-0612).	FHB Crane design reviewed and accepted by NRC in response to Generic Letter of 12/22/1980 (NUREG-0612).	FHB Crane design reviewed and accepted by NRC in response to Generic Letter of 12/22/1980 (NUREG-0612).

NUREG-0612 Section 5.1.1 Guidance or Defense-in-depth feature	Handling Operation: Upending or downending in the RSA	Handling Operation: Horizontal movement between the RSA and CWA	Handling Operation: Vertical movement over the CWA	Handling Operation: Horizontal movement between the CWA and CRA over elevation 140' SFP wall	Handling Operation: Vertical movement over the CRA
NUREG-0612 Appendix A Applicability	Yes. Downending drop of fully loaded transfer cask, cask transfer frame, cask lifting yoke and crane rigging onto elevation 115' floor slab postulated, evaluated and found satisfactory.	N/A. Precluded by overhead load handling system redundancy.	Yes. Vertical drop of fully loaded transfer cask with attached impact limiter, cask lifting yoke and crane rigging onto elevation 115' floor slab postulated, evaluated and found satisfactory.	N/A. Precluded by overhead load handling system redundancy.	Yes. Vertical drop of fully loaded transfer cask with attached impact limiter, cask lifting yoke and crane rigging onto elevation 94' CRA floor foundation slab postulated, evaluated and found satisfactory.
Design Features to ensure drop satisfies NUREG-0612 Section 5.1 Recommended Guidelines I - IV.	Cask Transfer Frame Impact limiter.	N/A.	Transfer Cask Impact Limiter.	N/A.	Transfer Cask Impact Limiter.
Design Features to preclude drops	N/A.	Additional main hoist anti-load drop reliability achieved through redundancy provided by an Auxiliary Lift designed to same codes and standards as FHB crane used in parallel with the main hoist.	N/A.	Additional main hoist anti-load drop reliability achieved through redundancy provided by an Auxiliary Lift designed to same codes and standards as FHB crane used in parallel with the main hoist.	Additional main hoist anti-load drop reliability achieved through redundancy provided by an Auxiliary Lift designed to same codes and standards as FHB crane used in parallel with the main hoist. FHB Crane Auxiliary Lift rigged before cask bottom guides protrude from top of SFP frame structure.

NUREG-0612 Section 5.1.1 Guidance or Defense-in-depth feature	Handling Operation: Upending or downending in the RSA	Handling Operation: Horizontal movement between the RSA and CWA	Handling Operation: Vertical movement over the CWA	Handling Operation: Horizontal movement between the CWA and CRA over elevation 140' SFP wall	Handling Operation: Vertical movement over the CRA
Design Features to preclude cask tip over and effects	(1) 10 CFR Part 72 transfer cask top lid confines MPC inside transfer cask body.	(1) 10 CFR Part 72 transfer cask top lid confines MPC inside transfer cask body.	(1) 10 CFR Part 72 transfer cask MPC lid retention device confines MPC lid and contents; (2) CWA Restraint precludes tip over of cask at conclusion of postulated drop.	(1) 10 CFR Part 72 transfer cask MPC lid retention device confines MPC lid and contents; (2) FHB Crane Auxiliary Lift precludes load drop with subsequent potential to tip over onto SFP fuel storage racks.	(1) 10 CFR Part 72 transfer cask MPC lid retention device confines MPC lid and contents; (2) SFP Frame precludes tip over of cask onto adjacent SFP fuel storage racks.

NUREG-0612 Section 5.1.1 Guidance or Defense-in-depth feature	Handling Operation: Upending or downending in the RSA	Handling Operation: Horizontal movement between the RSA and CWA	Handling Operation: Vertical movement over the CWA	Handling Operation: Horizontal movement between the CWA and CRA over elevation 140' SFP wall	Handling Operation: Vertical movement over the CRA
Design Features to preclude unacceptable cask impacts	(1) FHB crane, structure, and supporting runway and building superstructure is seismically qualified at full rated load; (2) FHB crane has redundant electrical interlocks to preclude crane operation over fuel storage racks in the SFP; (3) Upgraded FHB crane control system to include: - a mode for only a single motion (axis) at a time (excepting trolley-main hoist combination); - a diverse master all stop function to aid crane operator upon apparent crane malfunction; - variable speed drives for more precise movement and speeds to facilitate micro-positioning; - load measuring to sense and preclude load hang-up conditions.	(1) FHB crane, structure, and supporting runway and building superstructure is seismically qualified at full rated load; (2) FHB crane has redundant electrical interlocks to preclude crane operation over fuel storage racks in the SFP; (3) Upgraded FHB crane control system to include: - a mode for only a single motion (axis) at a time; - a diverse master all stop function to aid crane operator upon apparent crane malfunction; - variable speed drives for more precise movement and speeds to facilitate micro-positioning; - load measuring to sense and preclude load hang-up conditions.	(1) FHB crane, structure, and supporting runway and building superstructure is seismically qualified at full rated load; (2) FHB crane has redundant electrical interlocks to preclude crane operation over fuel storage racks in the SFP; (3) Upgraded FHB crane control system to include: - a mode for only a single motion (axis) at a time; - a diverse master all stop function to aid crane operator upon apparent crane malfunction; - variable speed drives for more precise movement and speeds to facilitate micro-positioning; - load measuring to sense and preclude load hang-up conditions.	(1) FHB crane, structure, and supporting runway and building superstructure is seismically qualified at full rated load; (2) FHB crane has redundant electrical interlocks to preclude crane operation over fuel storage racks in the SFP; (3) Upgraded FHB crane control system to include: - a mode for only a single motion (axis) at a time; - a diverse master all stop function to aid crane operator upon apparent crane malfunction; - variable speed drives for more precise movement and speeds to facilitate micro-positioning; - load measuring to sense and preclude load hang-up conditions.	(1) FHB crane, structure, and supporting runway and building superstructure is seismically qualified at full rated load; (2) FHB crane has redundant electrical interlocks to preclude crane operation over fuel storage racks in the SFP; (3) Upgraded FHB crane control system to include: - a mode for only a single motion (axis) at a time; - a diverse master all stop function to aid crane operator upon apparent crane malfunction; - variable speed drives for more precise movement and speeds to facilitate micro-positioning; - load measuring to sense and preclude load hang-up conditions.

NUREG-0612 Section 5.1.1 Guidance or Defense-in-depth feature	Handling Operation: Upending or downending in the RSA	Handling Operation: Horizontal movement between the RSA and CWA	Handling Operation: Vertical movement over the CWA	Handling Operation: Horizontal movement between the CWA and CRA over elevation 140' SFP wall	Handling Operation: Vertical movement over the CRA
Defense-in-depth measures to assure objectives of NUREG-0612 Section 5.1 Recommended Guidelines I - IV.	(1) All heavy load safe shutdown equipment beneath the load drop area verified to be out-of-service prior to load handling operation; (2) Overhead crane remains attached to cask until seismic restraints are secured; (3) Crane operator action at crane controls to stop crane upon malfunction.	(1) All heavy load safe shutdown equipment beneath the load drop area verified to be out-of-service prior to load handling operation; (2) Overhead crane remains attached to cask until seismic restraints are secured; (3) Crane operator action at crane controls to stop crane upon malfunction.	(1) All heavy load safe shutdown equipment beneath the load drop area verified to be out-of-service prior to load handling operation; (2) Overhead crane remains attached to cask until seismic restraints are secured; (3) Crane operator action at crane controls to stop crane upon malfunction; (4) Auxiliary lift slings installed and removed simultaneously to assure no off-center loading induced if main hoist system failed.	(1) All heavy load safe shutdown equipment beneath the load drop area verified to be out-of-service prior to load handling operation; (2) Overhead crane remains attached to cask until seismic restraints are secured; (3) Crane operator action at crane controls to stop crane upon malfunction.	(1) Crane operator action at crane controls to stop crane upon malfunction; (2) Auxiliary lift slings installed and removed simultaneously to assure no off-center loading induced if main hoist system failed; (3) Auxiliary lift attached until cask bottom guides are fully engaged in SFP frame.

DCPP Postulated Cask Drop Analyses Conformance Matrix

Section	NUREG-0612 Appendix A Guidance	DCPP Analysis Conformance	DCPP Equivalent Methodology
General Consideration 1(1)	*"That the load is dropped in an orientation that causes the most severe consequences;"*	Not conformant.	1. Cask drop orientation is dynamically simulated using QA-validated Visual Nastran computer code. 2. Defense-in-depth credit is taken for SFP frame structure to preclude tip-drop onto adjacent SFP fuel storage racks.
General Consideration 1(2)	*"That fuel impacted is 100 hours subcritical (or whatever the minimum that is allowed in facility technical specification prior to fuel handling);"*	Conformant, but SFP nuclear fuel impact is not postulated. Nuclear fuel contents in the MPC loaded in the transfer cask meet this guidance in accordance with 10 CFR 72.	See GC 1(1) Item 2 above.
General Consideration 1(3)	*"That the load may be dropped at any location in the crane travel area where movement is not restricted by mechanical stops or electrical interlocks;"*	Not conformant.	1. Cask drop is postulated only over administratively controlled plant locations (e.g., centerline of SFP CRA, or CWA temporary restraint structure or RSA up/downending) along load path "B" as depicted in LAR Figure 9 that are within a crane travel area restricted from travel over SFP fuel storage racks by electrical interlocks, and when a redundant load holding system for the main hoist is not used. 2. Defense-in-depth credit is taken for SFP frame structure to preclude tip-drop onto adjacent SFP fuel storage racks.
General Consideration 1(4)	*"That credit may not be taken for spent fuel pool area charcoal filters if hatches, wall or roof sections are removed during the handling of the heavy load being analyzed, or whenever the building negative pressure rises above (-)1/8 inch (-3 m) water gauge;"*	Conformant, but no credit taken.	-

Section	NUREG-0612 Appendix A Guidance	DCPP Analysis Conformance	DCPP Equivalent Methodology
General Consideration 1(5)	*"Analyses that rely on results of Table 2.1-1 or Figures 2.1-1 or 2.1-2 for potential offsite doses or safe decay times should verify that the assumptions of Table 2.1-2 are conservative for the facility under review. X/Q values should be derived from analysis of on-site meteorological measurements based on 5% worst meteorological conditions."*	Conformant, but no reliance taken.	-
General Consideration 1(6)	*"Analyses should be based on an elastic-plastic curve that represents a true stress-strain relationship."*	Conformant.	-
General Consideration 1(7)	*"The analysis should postulate the 'maximum damage' the that could result, i.e., the analysis should consider that all energy is absorbed by the structure and/or equipment that is impacted[.]"*	Conformant.	-
General Consideration 1(8)	*"Loads need not be analyzed if their loads paths and consequences are scoped by the analysis of some other load."*	Conformant, but cask is limiting load.	-
General Consideration 1(9)	*"To overcome water leakage due to damage from a load drop, credit may be taken for borated water make-up of adequate concentration that is required to be available by the technical specifications."*	Conformant, but no credit taken for make-up.	Analyses conclude that the SFP liner (non-safety related) may be damaged but the water retaining FHB/AB concrete foundation structure (safety-related) remains intact. Thus, water leakage behind liner is captured by the concrete foundation and is detectable and isolatable at the SFP liner leak detection valves.
General Consideration 1(10)	*"Credit may not be taken for equipment to operate that may mitigate the effects of the load drop if the equipment is not required to be operable by the technical specifications when the load could be dropped."*	Conformant, but no credit taken.	-
Spent Fuel Cask Drop Analysis 3(1)	*"Applying a single-failure to the lifting assembly, consider that the cask is dropped in an orientation that will result in the most severe consequences."*	Not conformant.	Cask drop orientation is dynamically simulated using QA-validated Visual Nastran computer code.
Spent Fuel Cask Drop Analysis	*"Impact loads should include a fully loaded cask (with water, where applicable) and all equipment required*	Conformant.	-

Section	NUREG-0612 Appendix A Guidance	DCPP Analysis Conformance	DCPP Equivalent Methodology
3(2)	*for lifting and set down such as baseplates, lifting yokes, wire ropes and crane blocks."*		
Spent Fuel Cask Drop Analysis 3(3)	*"Restricted path travel of the spent fuel cask (defined by electrical interlocks, mechanical stops, and crane travel capability) should be evaluated to determine the locations and probable accident cases along the path - where damage could occur to:* *(a) the floor and walls of the Spent Fuel Pool (SFP);* *(b) racks within the SFP which support the spent fuel;* *(c) the spent fuel itself;* *(d) the refueling channel gate' or* *(e) safety-related systems, components and structures beneath or adjacent to the travel path of the cask."*	Not conformant.	1. Cask drop is postulated only over administratively controlled plant locations (e.g., centerline of SFP CRA, or CWA temporary restraint structure or RSA up/downending) along load path "B" as depicted in LAR Figure 9 that are within a crane travel zone restricted from travel over SFP fuel storage racks by electrical interlocks. For the three drop locations, (a), (c) and (e) are evaluated. Regarding Subsection (e), one safety-related line for make-up to the SFP traverses load path "B." This line will be relocated prior to cask handling operations. Subsection (b) is not applicable based on methodology used GC 1(3) Item 3 above. Subsection (d) is not applicable as the "refueling channel gate" at DCPP is located on the opposite side of the SFP from the CRA as depicted in LAR Figure 9.
Spent Fuel Cask Drop Analysis 3(4)	*"In the analysis consideration may be given to drag forces caused by the environment of the postulated accident case, e.g., when the spent fuel cask is postulated to drop into the SFP, credit may be taken for drag forces caused by the water in the SFP. Water level assumed for such analyses should be the minimum level allowed by technical specifications."*	Conformant.	-
Spent Fuel Cask Drop Analysis 3(5)	*"Credit may be taken for energy absorbing devicesh integral to the cask if attached during the handling operations in determining the amount of energy imparted to the spent fuel or safety related systems, components or structures."*	Conformant. Impact limiter modeled in the analysis when deployed.	-

Section	NUREG-0612 Appendix A Guidance	DCPP Analysis Conformance	DCPP Equivalent Methodology
Spent Fuel Cask Drop Analysis 3(6)	*"For the purpose of the analysis the cask should be considered rigid (except for devices and appurtences specifically designed for energy absorption and in place) and not to experience deformation during impact."*	Conformant.	-
Spent Fuel Cask Drop Analysis 3(7)	*"In the calculating the center of gravity, consideration should be given to modifications made to the cask after purchase, e.g., addition of a perforated metal basket within the cask."*	Conformant. Modifications to the Diablo Canyon ISFSI 10 CFR Part 72 licensed cask hardware are conducted and coordinated using the DCPP Configuration Management Process.	-

DCPP Postulated Cask Drop Analyses Results Matrix

Section	NUREG-0612 Section 5.1 Guidance	Results	Notes
Recommended Guideline I.	*"Releases of radioactive material that may result from damage to spent fuel based on calculations involving accidental dropping of a postulated heavy load produce doses that are well within 10 CFR Part 100 limits of 300 rem thyroid, 25 rem whole body (analyses should show that doses are equal to or less than ¼ of Part 100 limits);"*	Satisfied.	1. Spent fuel assemblies in the SFP fuel storage racks are not affected by cask handling operations as described in Table 3-1-1 of this response. 2. 10 CFR 72 licensed contents of the MPC are bounded by the DCPP Fuel Handling Accident consequences as described in LAR Section 4.3.1(a)1.
Recommended Guideline II.	*"Damage to fuel and fuel storage racks based on calculations involving accidental dropping of a postulated heavy load does not result in a configuration of the fuel such that k_{eff} is larger than 0.95;"*	Satisfied.	1. Spent fuel assemblies in the SFP fuel storage racks are not affected by cask handling operations as described in Table 3-1-1 of this response. 2. 10 CFR 72 licensed contents of the MPC are bounded by the DCPP FSAR Update Fuel Handling Accident consequences as described in LAR Section 4.3.1(a)1. Criticality of the MPC contents is bounded by the analyses as described in LAR Section 4.2.7.
Recommended Guideline III.	*"Damage to the reactor vessel or the spent fuel pool based on calculations involving accidental dropping of a postulated heavy load is limited so as not to result in water leakage that could uncover the fuel, (makeup water provided to overcome leakage should be from a borated source of adequate concentration if the water being lost is borated); and"*	Satisfied.	1. Spent fuel assemblies in the SFP fuel storage racks are not affected by cask handling operations as described in Table 3-1-1 GC 1(9) of this response.
Recommended Guideline IV.	*"Damage to equipment in redundant or dual safe shutdown paths, based on calculations assuming the accidental dropping of a postulated heavy load, will be limited so as not to result in loss of required safe shutdown functions."*	Satisfied.	1. Overhead heavy load handling operations, including future cask handling, are typically performed during plant power operations. This fact was the topic of PG&E's

Section	NUREG-0612 Section 5.1 Guidance	Results	Notes
			response to NRC Bulletin 96-02 (LAR Reference 7.1). The DCPP Control of Heavy Loads Program requires an evaluation of the potential for overhead heavy load handling operations to affect a discrete set of plant safe shutdown components ("targets"). Targets present today or installed hence which are beneath cask handling operations as evaluated in PG&E's HI-STORM 100SA heavy load calculation will be either administratively controlled or relocated to maintain the ability to safely shutdown the plant following a postulated heavy load drop event.

LIST OF FIGURES

FIGURE NO.	TITLE
1-1-1	Spent Fuel Cask Handling Route (excerpted from DCPP FSAR Update, Figure 9.1-7)
1-1-2	(excerpted from DCPP FSAR Update Figure 9.1-3)
1-4-1	Extension Link
1-5-1	Fuel Handling Crane Load Paths
1-5-2	Auxiliary Lift
5.1-1	Diablo Canyon ISFSI SAR Figure 5.1-1 – Operation Sequence Flowchart for Cask System Loading, Sealing, Testing, and Storage (previously submitted in PG&E Letter DIL-01-002, dated December 21, 2001 under Docket No. 72.26)

FIGURE

1-1-1

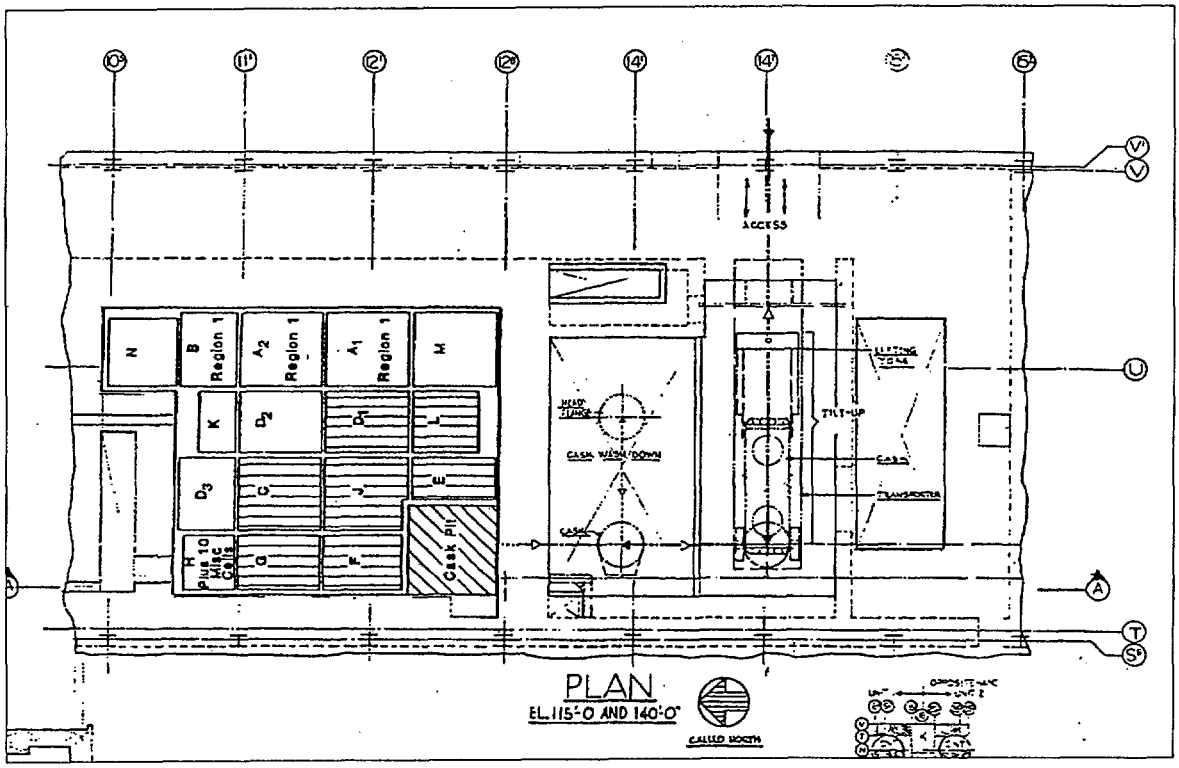

Figure 1-1-1
Spent Fuel Cask Handling Route
(excerpted from DCPP FSAR Update, Figure 9.1-7)

FIGURE

1-1-2

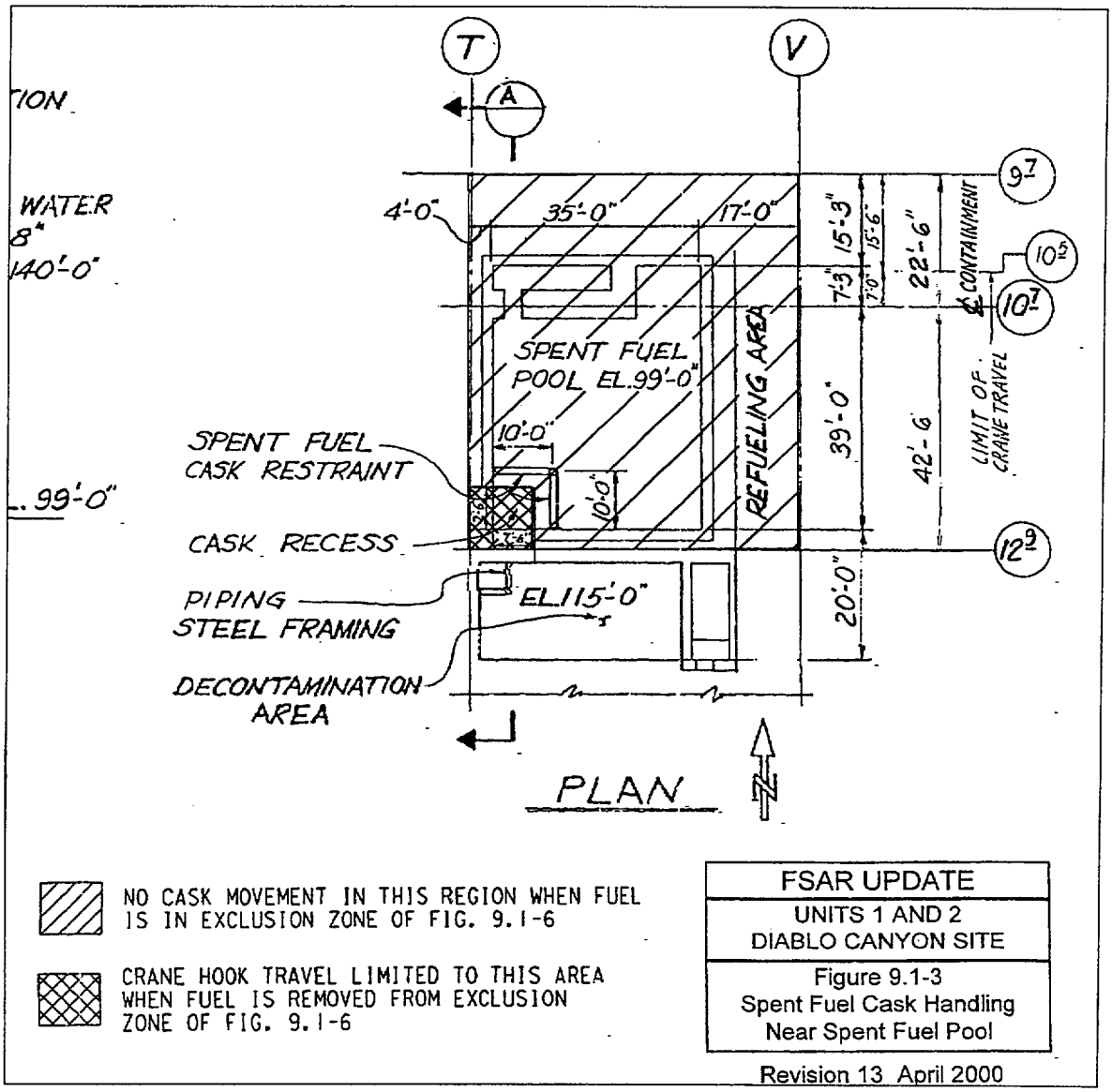

Figure 1-1-2
(excerpted from DCPP FSAR Update Figure 9.1-3)

FIGURE

1-4-1

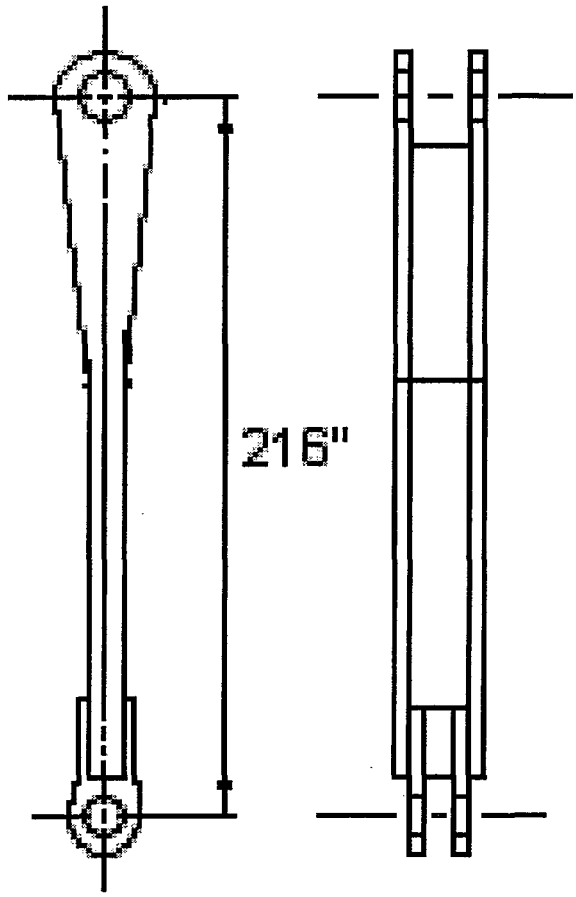

Figure 1-4-1
Extension Link

FIGURE

1-5-1

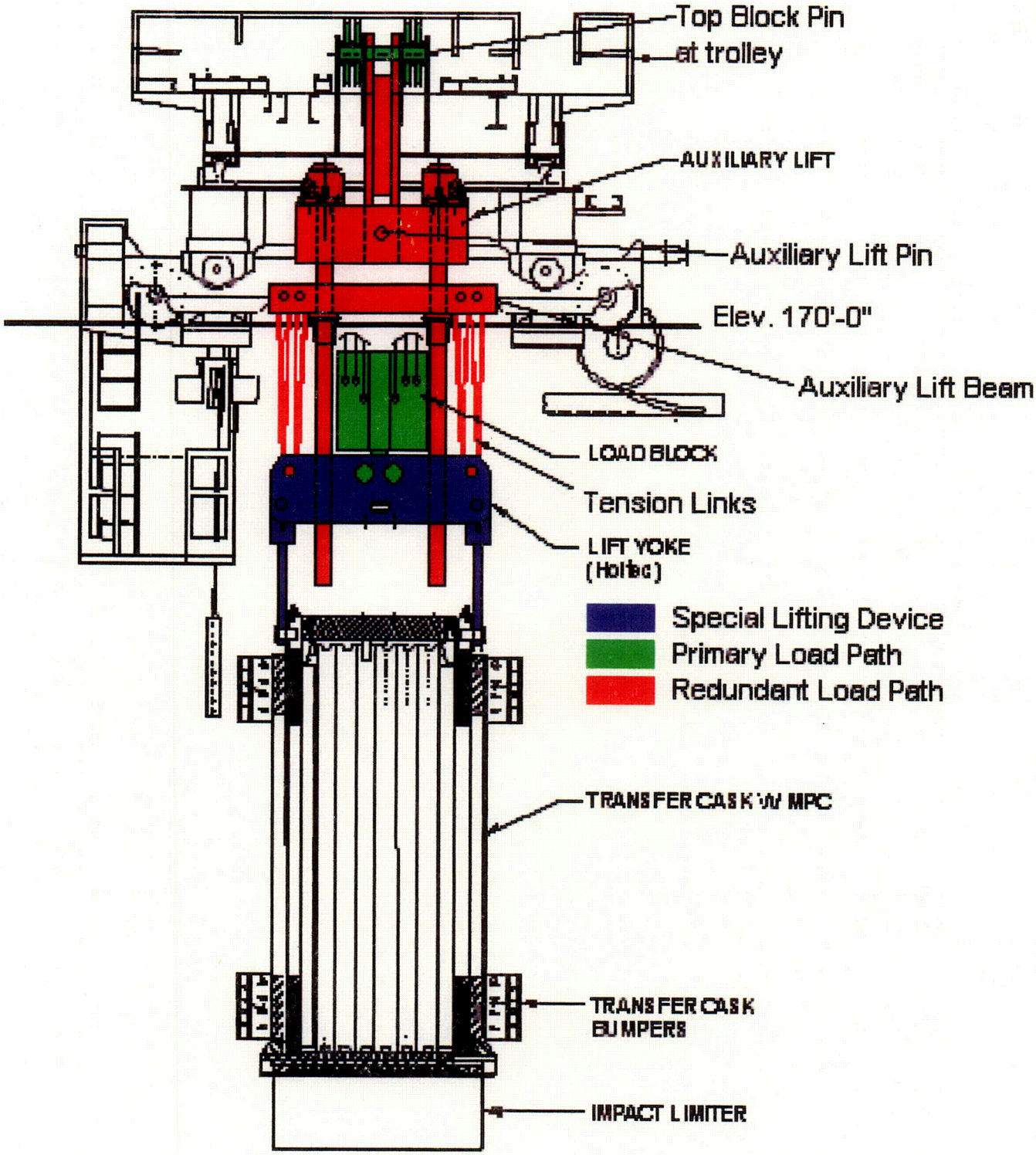

Figure 1-5-1
Fuel Handling Crane Load Paths

C01

FIGURE

1-5-2

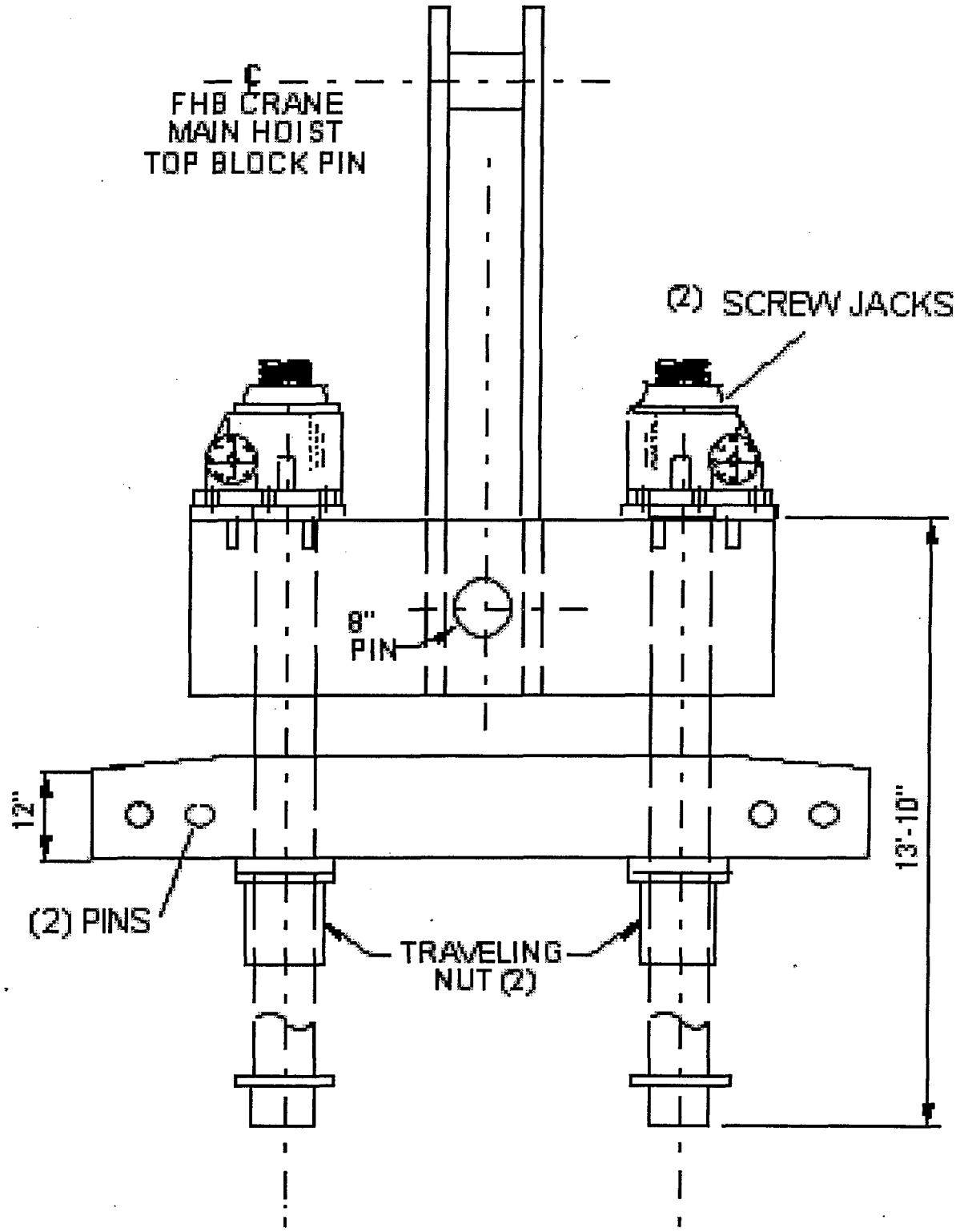

Figure 1-5-2
Auxiliary Lift

FIGURE

5.1-1

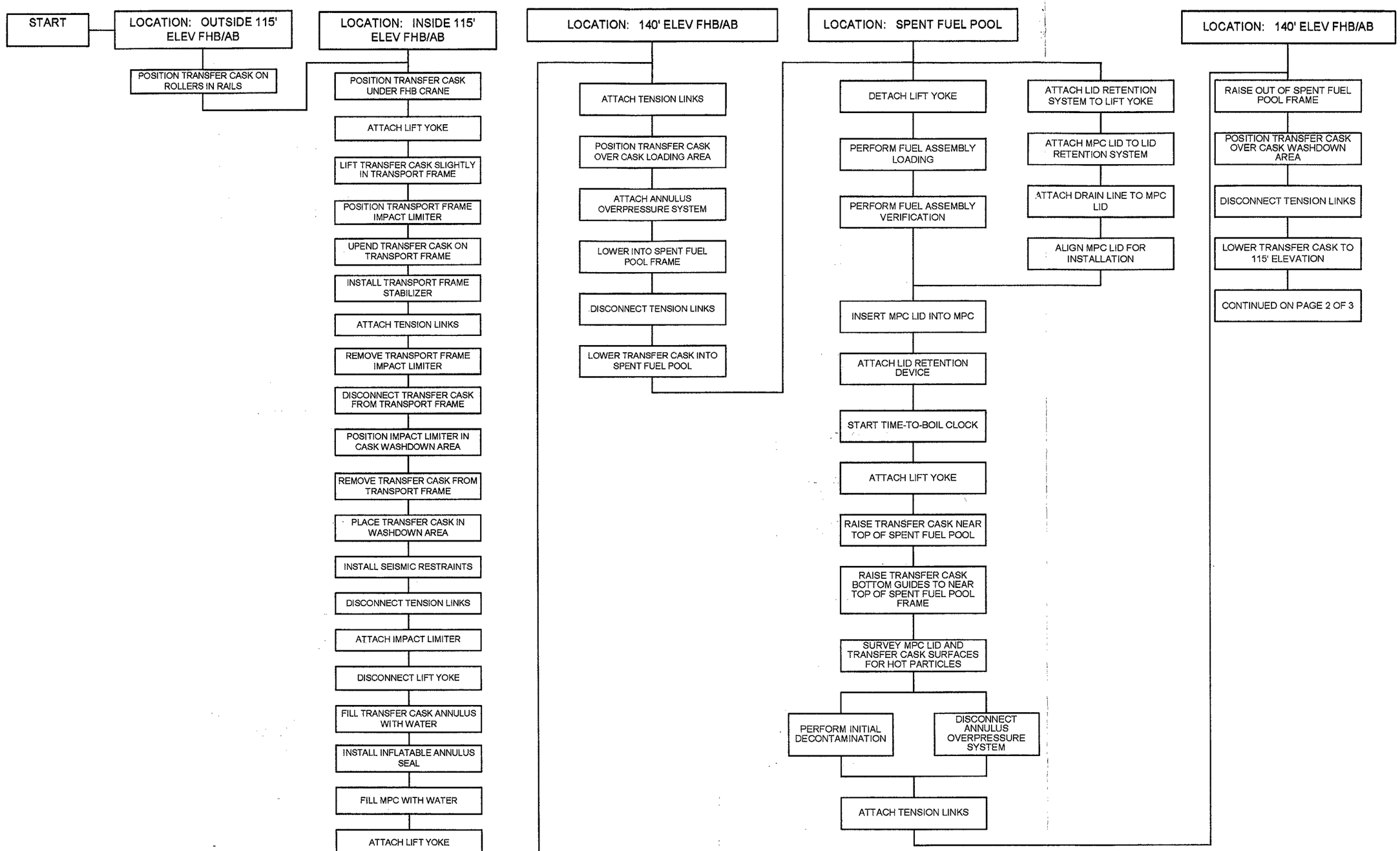

SAFETY ANALYSIS REPORT

DIABLO CANYON ISFSI

FIGURE 5.1-1 (1 of 3)
OPERATION SEQUENCE FLOWCHART FOR CASK SYSTEM LOADING, SEALING, TESTING, AND STORAGE

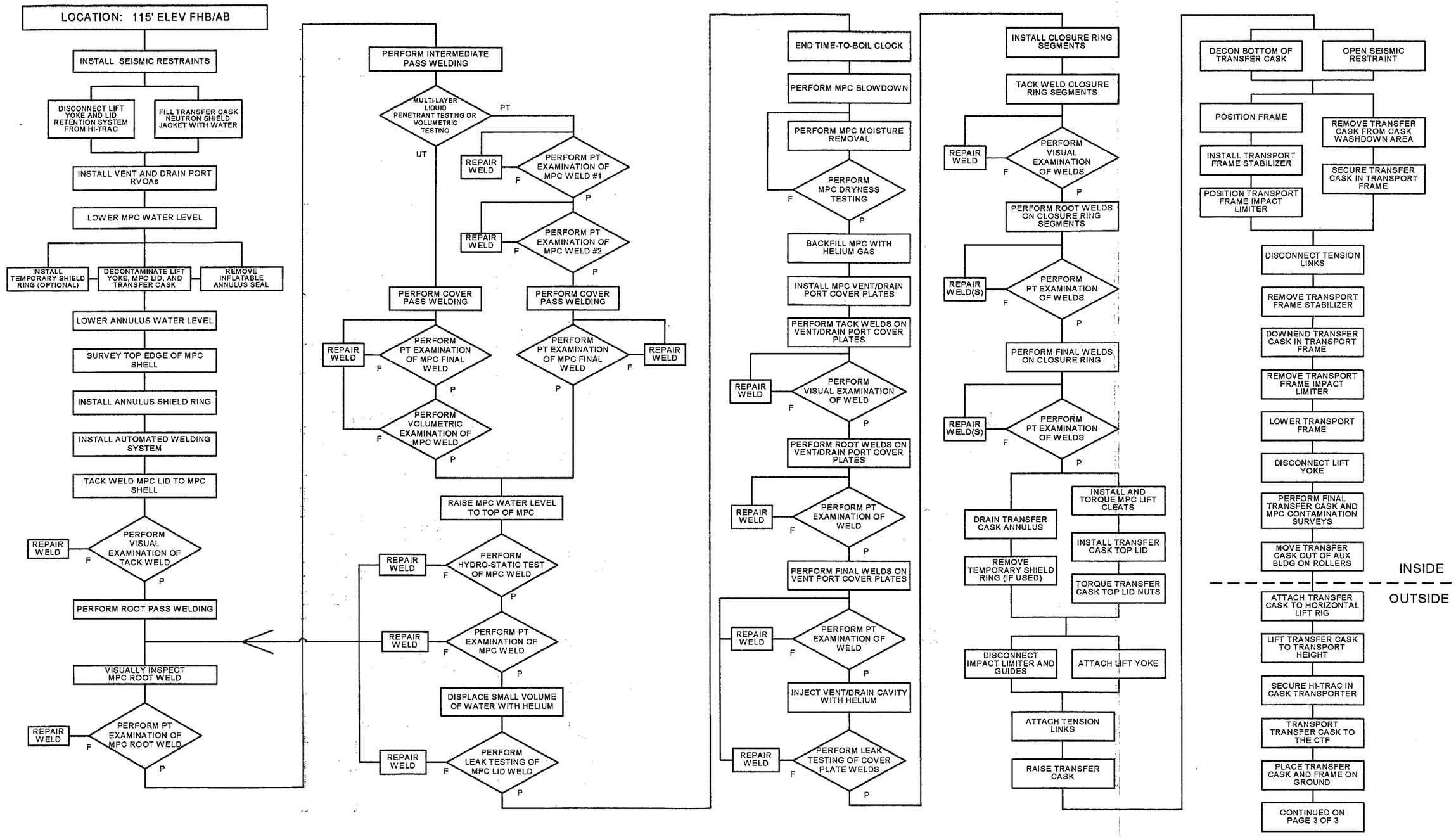

SAFETY ANALYSIS REPORT

DIABLO CANYON ISFSI

FIGURE 5.1-1 (2 of 3)
OPERATION SEQUENCE FLOWCHART FOR CASK SYSTEM LOADING, SEALING, TESTING, AND STORAGE

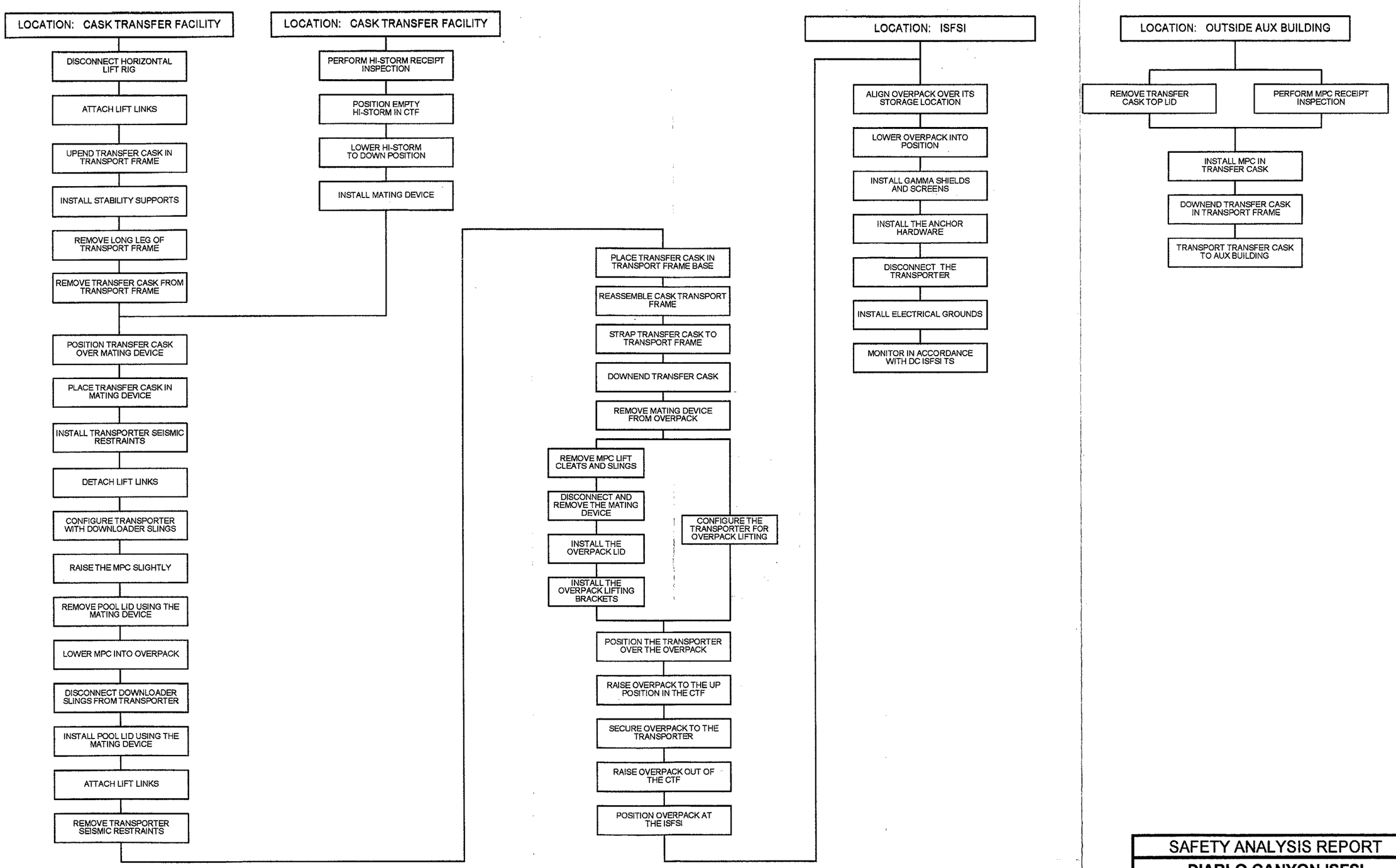

SAFETY ANALYSIS REPORT

DIABLO CANYON ISFSI

FIGURE 5.1-1 (3 of 3)
OPERATION SEQUENCE FLOWCHART FOR CASK SYSTEM LOADING, SEALING, TESTING, AND STORAGE