ENERCON SERVICES, INC.

ENGINEERING CALCULATION COVER SHEET

CALCULATION NO. PGE-009-CALC-001 **REVISION NO.** 5

PURPOSE OF CALCULATION:

Design the components of an anchorage system for the Holtec HI-Storm 100SA used fuel storage casks that will be used at the Diablo Canyon Nuclear Power Plant.

SCOPE OF REVISION:

Revision adjusts the calculation for the layer of steel above to anchor plates to incorporate results from the steel reinforcement calculation PGE-009-CALC-007. Adjusted Figure 6 to be consistent with the 007 calculation. Revised some formats.

REVISION IMPACT ON RESULTS:

No impact.

STATE OF MICHIGAN
STEPHEN C. TUMMINELLI
ENGINEER
No. 28729
LICENSED PROFESSIONAL ENGINEER

Oct. 31, 2003

☒ SAFETY RELATED ☐ NON-SAFETY RELATED

☐ PRELIMINARY CALCULATION ☒ FINAL

APPROVALS *(Print Name and Sign)*

ORIGINATOR	S. C. Tumminelli	Date March 11, 2003
REVIEWER		Date
VERIFICATION ENGINEER	K. L. Whitmore	Date March 11, 2003
APPROVER	R. F. Evers	Date March 11, 2003
OTHER REVIEWER		Date

ENERCON SERVICES, INC.

ENGINEERING CALCULATION REVISION STATUS SHEET

CALCULATION NO. PGE-009-CALC-001

ENGINEERING CALCULATION REVISION SUMMARY

REVISION NO.	DATE	DESCRIPTION
0	3/28/01	Initial issue.
1	6/27/01	Upgraded from a sizing calculation to a final design calculation. Added more detail and addressed reviewers comments. Revised version of Appendix B used and revision of Holtec report for design input loads. Calculation revised in its entirety. No revision bars shown. Added appendices DOC-1 and DOC-2.
2	11/21/01	Made minor grammar and punctuation corrections. Revision reflects conformance to alternate criteria specified by the ACI 349-97 code for A36, that is more appropriate for this material. Incorporated latest revision of the Holtec cask report.
3	12/14/01	Revised references 4.1.3 and 4.1.4 to latest rev. no. Change is not substantive. Corrected typos this page.
4	01/02/03	All sheets revised to rev. 4 due to pagination. Substantive revisions are to the anchor plate size on sheet 22, and concrete pull out sheets 24 to 28.
5	03/11/03	All sheets show a new revision number. Revised the calculation for shear and shear friction, sheets 24 to 29.

CALCULATION SHEET REVISION STATUS

SHEET NO.	REVISION NO.	SHEET NO.	REVISION NO.
All sheets upgraded to Revision 1	1	3,11	3
		All sheets	4
3-6, 9 and 11	2	All sheets	5
20 – 27	2		

APPENDIX AND ATTACHMENT REVISION STATUS

APPENDIX NO.	REVISION NO.	ATTACHMENT NO.	REVISION NO.
DOC-1	2	N/A	N/A
DOC-2	2		

REVIEW SUMMARY SHEET

(Enercon Services, Inc. Corporate Standard Procedure # 3.01 paragraph 4.6)

Method of Review:

The changes made in revision 4 of the calculation have been independently reviewed in accordance with the requirements of ENERCON Corporate Standard Procedure 3.01. The independent verification of the calculation was performed by a detailed review and check of the entire calculation including a check of the impact of the changes on the remaining portions of the calculation. This included verification of inputs, methodology, results and conclusions as well as a check of the mathematical accuracy of the computations.

Results:

The calculation has been independently verified to be mathematically correct and to be performed in accordance with license and design basis requirements and applicable codes. Inputs are appropriate and are obtained from verified source documents. The calculation is sufficiently documented and detailed to permit independent verification. No assumptions are made other than conservative simplifying assumptions which are identified and do not require confirmation. The methodology used is appropriate and consistent with the purpose of the calculation

The rods, couplings, bearing plates and other hardware detailed in the calculation and on drawings PGE-009-SK-301 and PGE-009-SK-302 have been demonstrated by the analysis documented in the calculation to be adequate to transfer the loads of the HI-STORM cask to the slab of the spent fuel storage facility. The design has been shown to be in compliance with the design and license basis requirements and to be adequate for the Hosgri and Long Term Seismic Program seismic events. In addition, the embedment support structure has been shown to meet all requirements with regard to strength, ductility, stiffness and factors of safety.

Thus, the design is compliant with all technical and license basis requirements at Diablo Canyon Power Plant. In addition, the results and conclusions accurately reflect the findings of the calculation. Thus, the embedment support structure design is adequate and compliant with all requirements.

1.0 PROBLEM STATEMENT

The purpose of this calculation is to design the components of an anchorage system for the Holtec HI-Storm 100A used fuel storage casks that will be used at the Diablo Canyon Nuclear Power Plant. This anchorage system is called the Embedment Support Structure. The used fuel storage casks are part of an Independent Spent Fuel Storage Installation that will be used to store irradiated used fuel.

The anchorage system will be embedded in the concrete cask storage pads at the Independent Spent Fuel Storage Installation site. This calculation identifies load paths and predicts member performance to determine member sizes and details.

The anchorage system is to provide the following:

- a level surface for the cask to sit upon.
- sixteen (16) receptacles for (16) - 2 inch diameter anchorage studs.
- strength to deliver applied cask loads due to external events to the concrete pad.

2.0 INPUT REQUIREMENTS

2.1 Assumptions

None

2.2 Design Data

Materials

The plates and bars are to be made from ASTM A-36 material.

The receptacles into which the anchor studs thread are to be SA 516 Grade 70, per Holtec requirements (See Ref. 4.1.4, pg A-5).

The concrete cask storage pad compressive strength is to be 5000 psi.

The spring rate of the round anchor bars is 1.898e6 lb./in. (Ref. 4.1.4, Table 1, pg. 23 and sheet A-8).

Applied loads

Loads from Holtec report HI-2012618, (Ref. 4.1.4) are as follows (These loads are from analyses for the Hosgri and Long Term Seismic Program seismic events):

- Maximum Net Interface Shear Force is 515 kip (See ref., pg. 9). This is the largest vector sum of the applied shears at the base of the cask.
- Maximum applied Tensile Load in Embedment Anchor Rods is 62.13 kip (See ref. pg. 9)
- Cask Anchor Stud Preload is 157 kip (See ref, pg. 19)

Distance from pad surface to C.G. of cask is 118.5 inches (See ref., pg. 10)

3.0 METHODOLOGY

The detailed descriptions and calculations below will demonstrate the following:

The casks are anchored into the concrete by embedded anchor bars. Anchor plates are attached to the bottom of these anchor bars to provide adequate bearing area onto the concrete so as to be able to transfer all load by end bearing. Anchorage is designed so as to meet the ductile anchorage provisions of the 10/01/00 Proposed Draft New Appendix B to ACI 349-97, see Ref. 4.2.1. Specifically, the design strength capacity of the anchor plate (B.10.1), concrete bearing (10.15.1 and B.4.5.2), and the diagonal tension shear capacity (11.3.1.1) computed in accordance with the design provisions of ACI 349-97 all exceed the anchor bar required ductile design strength of 235.63 kips (see Section 6.3) for A36 material per Section B.3.6.2 and Commentary (Ref. 4.2.1.). Furthermore, the minimum ultimate tensile strength which is computed at the reduced section at the thread root of the anchor bar is 125 percent of the minimum yield strength (176.72 kips) of the unreduced gross section of the anchor bar, though the Code only requires that it be greater.

The anchor bars are made from A36 steel, which has a well-defined yield plateau. Thus, if any overload occurs, the anchor bars will yield before any less ductile failure could occur. Lastly, the minimum yield strength of the anchor bars is more than 250 percent of the computed demand load (62.13 kips) on these bars so as to provide substantial margin against yielding.

The main components of the anchorage system will be comprised of a circular steel Embedment Support Plate, sixteen (16) Couplers used to anchor the Holtec supplied 2 inch Cask Anchor Studs, and sixteen (16) Round Bars (including anchor plates) used to anchor the Couplers. These components will be embedded in the concrete pad. The design of the concrete pad is the subject of a separate calculation. A description of the components sized in this calculation is as follows:

<u>EMBEDMENT SUPPORT PLATE</u> (Figure 1)

The Holtec cask base plate outside diameter is 146 ½ inches, ± ¼ inch (Ref. 4.1.3). The largest diameter with tolerance is 146 ¾ inches. The Holtec 2 inch diameter studs fit into the embedment plate through holes in the cask flange that are sized at 2 ¼ inches, +¼, -0 inch (Ref. 4.1.3). Thus the cask can shift in the holes by ½ inch. Therefore the maximum effective diameter of the cask base plate is 147 ¼ inches

The desire is to have a ½ inch lip on the embed showing regardless of where the cask is placed. Therefore, the embedment plate must be 148 ¼ inches minimum. Therefore, call for 149 inch ± ¼ inch diameter. This provides some additional margin for future potential minor changes in dimensional tolerance.

The bolt circle is 139 ½ inches. For symmetry, call for 130 ± ¼ inch diameter for the inside.

The concrete pad will slope at approximately 1% for drainage. Thus, the concrete surface will be approximately 1 ½ inches higher on one side of the embedment support plate (0.01x149 = 1.49 inches). Call for a 2 inch thick plate to keep the bottom of the embedment support plate below the concrete surface.

Therefore, the embedment plate dimensions are as follows:

- outside diameter is 149 inches, ± ¼ inch
- inside diameter is 130 inches, ± ¼ inch
- bolt circle diameter is 139 ½ inches, to be located using a template
- plate is 2 inches thick

<u>COUPLER</u> (Figures 2 and 3)

Sixteen 5 ½ inch Couplers are required. Each Coupler will be made with a 2 inch Class 2B thread to match the Holtec Cask Anchor Stud (Ref. 4.1.4, pg. A-4). The thread length needed is:

$$Le + 2\frac{1}{n} = 1.397 + 2\ x\frac{1}{4} = 1.897 \text{ in}.$$

The Coupler will be designed to have a boss that fits up into a hole in the embedment support plate. A tight fit is required so that tolerance will be held to a minimum and so that shear may be delivered without appreciable bending. The threads in the coupler will be started well below the plate so that the stud can pull the coupler up into bearing with the plate. Relief is provided at the bottom of the hole to allow for thread run-out and good stud installation practice.

The outside diameter of the coupler was selected to be larger than a heavy hex nut for the threads used in the round bar below. It is then evaluated for shear capacity. A threaded hole in the bottom of the coupler will be provided to accommodate a round bar required that delivers load to the concrete.

ROUND BARS (Figure 2)

Sixteen round bars are also required. The bars will mate with the bottom of the Coupler to deliver the cask tensile loads to the concrete pad. The bars will be designed to ensure ductile failure, i.e., the embedment and concrete strength will have the capability of developing the capacity of the bar. These bars are the parts of the structure that will demonstrate compliance with the ductility requirements of ACI 349-97, Appendix B (Ref.4.2.1).

The Holtec calculation for loads includes a spring rate for these bars, see Section 2.2. The bar used in that calculation is 2 inches in diameter x 48 inches long. The calculated stiffness of the bar is, $k = 1.898\ 10^6$ lb./in. Any bar used must remain faithful to this stiffness. This calculation will ensure compliance to this requirement.

The round bars will be embedded deeply into the pad to ensure bar strength and to ensure the concrete will not fracture under applied load.

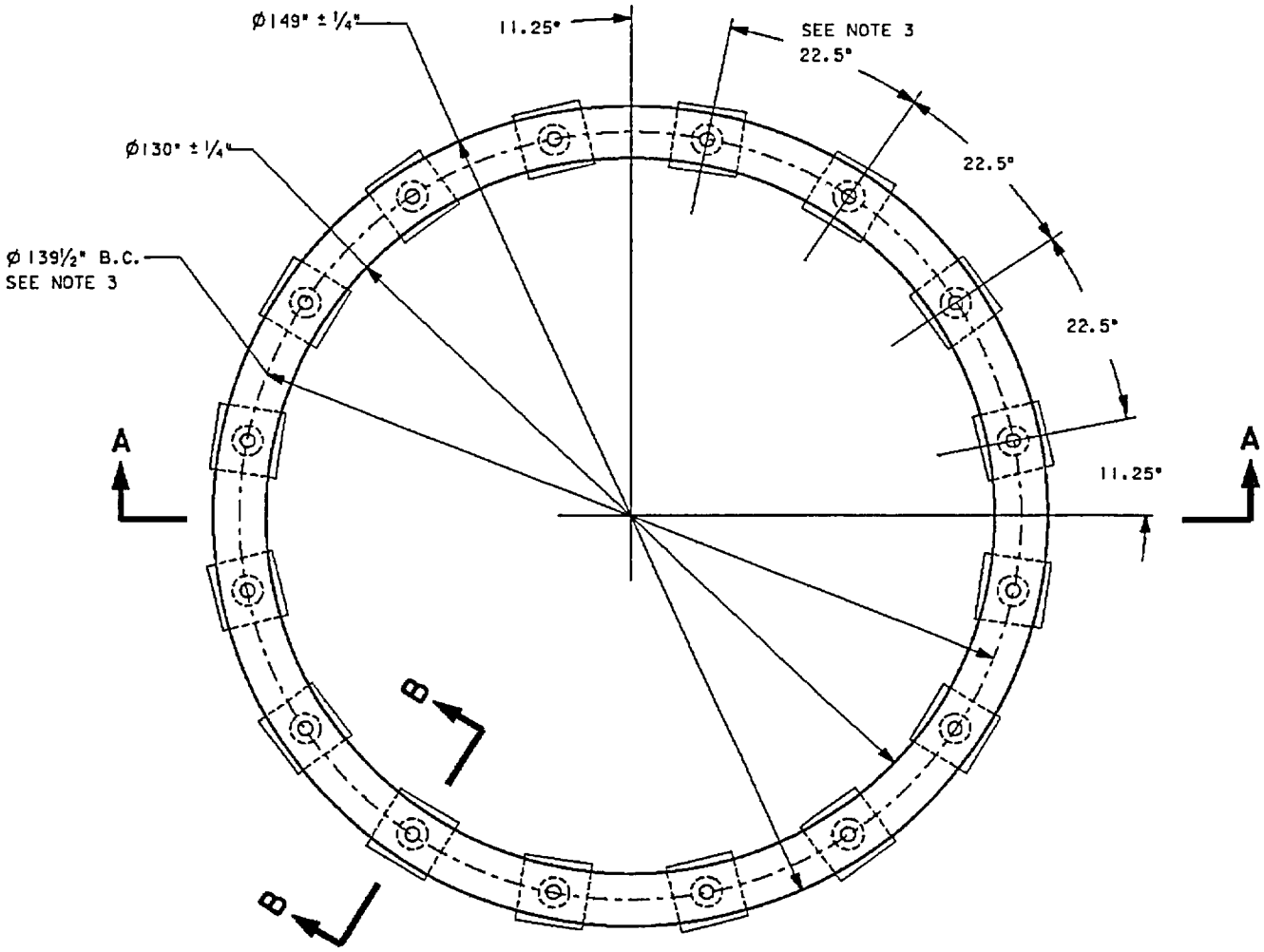

PLAN VIEW
EMBEDMENT SUPPORT PLATE

Figure 1
Embedment Support Plate
(Ref. 4.1.1)

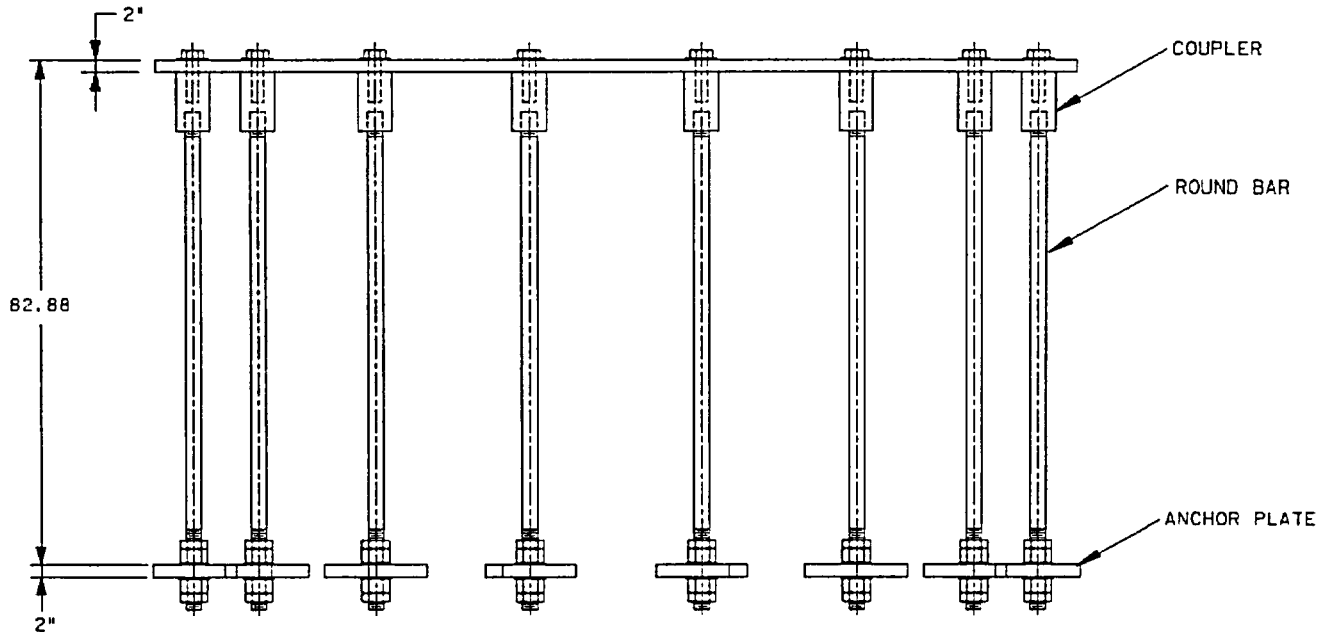

SECTION A-A

Figure 2
Section of Embedment Support Plate
Showing Round Bars, Couplers and Anchor Plates
(Ref. 4.1.1)

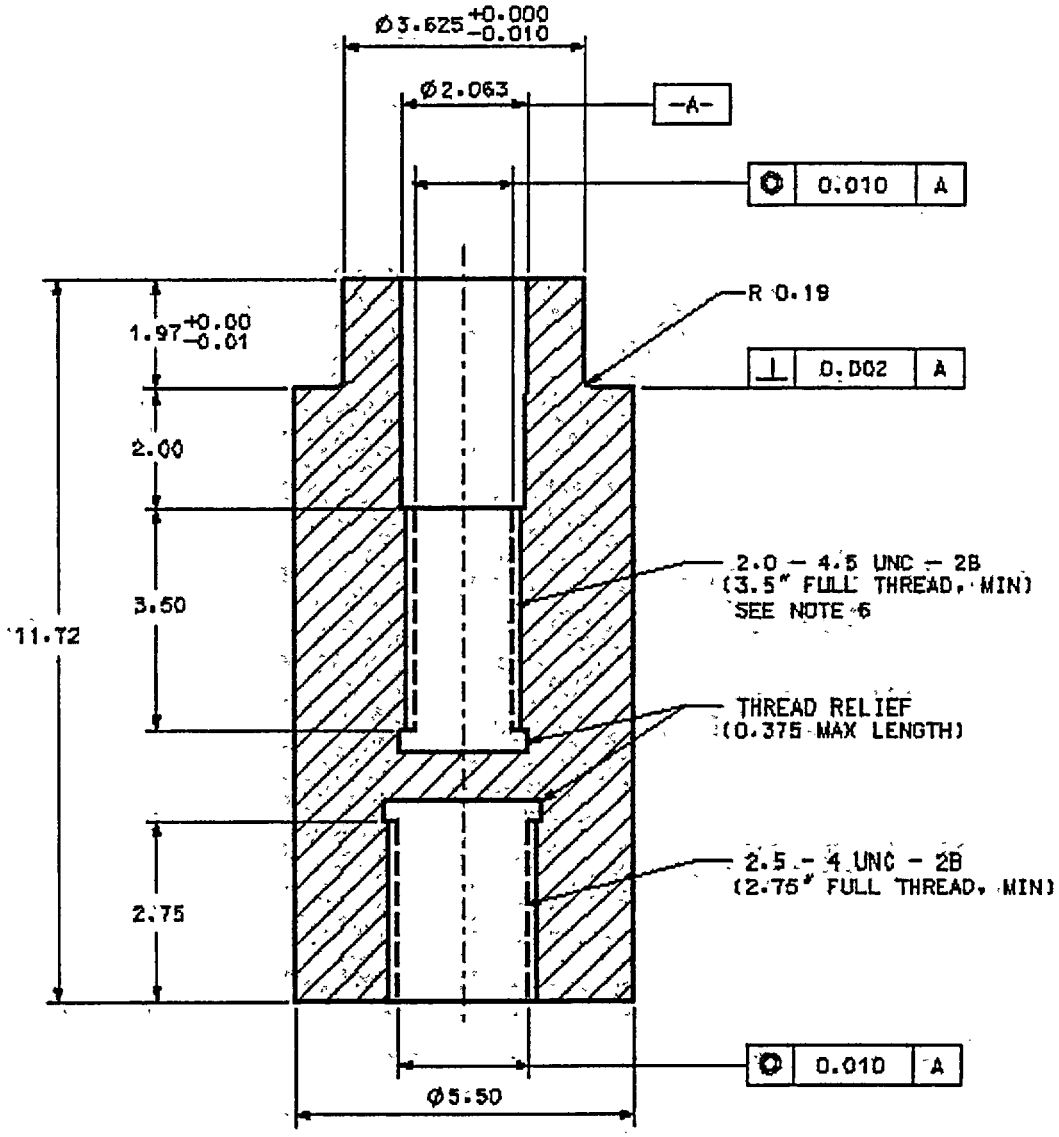

SECTION B - B

Figure 3
Section Through Coupler
(Ref. 4.1.2)

4.0 REFERENCES

Reports, Drawings and Industry Literature

4.1.1. Enercon Sketch No. PGE-009-SK-301, Sh.1, "Embedment Support Structure, Diablo Canyon Power Plant", see Appendix DOC-1.

4.1.2 Enercon No. PGE-009-SK-302, Sh.1, "Embedment Support Structure Details, Diablo Canyon Power Plant", see Appendix DOC-1.

4.1.3 Holtec Drawing 3570, Rev.2, "Cask Anchor Stud and Sector Lug Arrangement".

4.1.4 Holtec Report No. HI-2012618, R5.

4.1.5 Roark's Formulas for Stress and Strain, 6th Edition.

4.1.6 Machinery's Handbook, 26 th Edition, Industrial Press Inc., New York, 2000

4.1.7 Good Bolting Practices, Volume 1: Large Bolt Manual, EPRI. 1987.

4.1.8 ENERCON Calculation PGE-009-CALC-007, "ISFSI Cask Storage Pad Steel Reinforcement", latest revision.

4.1.9 PG&E Specification, 10012-N-NPG, Rev 2,

Design Codes

4.2.1 ACI 349 - 97, including the proposed revision to Appendix B, dated 10/01/00. See Appendix DOC-2 for ACI 349 Appendix B.

4.2.2 Steel Construction Manual, 9th Edition, AISC

5.0 CONCLUSION

This calculation concludes that the members as identified in the body of the calculation are in compliance with design codes and acceptable design practices.

6.0 CALCULATION

6.1 Embedment Support Plate

Shear tearout at hole for Coupler. Edge distance will be evaluated per Ref. 4.2.2.

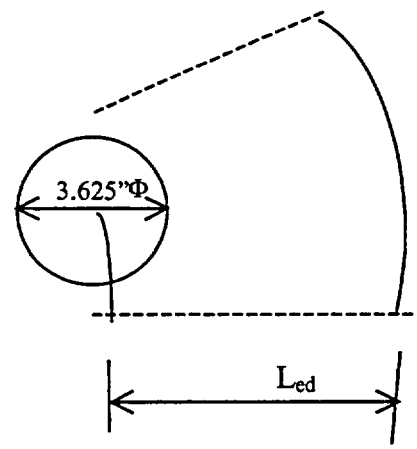

$$L_{ed} = \frac{\left(149 - \frac{1}{4}\right) - \left(139.5 + \frac{1}{4}\right)}{2} = 4.5 \text{ inches}$$

Hole deformation is not a design consideration at Hosgri and Long Term Seismic Program seismic load level, since the acceptance stress level is at structure capacity.

Ref. 4.2.2, Section J3-9 - Table J3-5 sets the following requirement:

Minimum edge distance is: 1¼ d = 1.25 x 3.625 = 4.53 ≈ 4.5 ⇒ Acceptable, since the 4.5 inch dimension was computed by stacking the tolerances in one direction. This 0.500 inch tolerance is very large relative to the 0.030 inches computed to be beyond the code acceptable value.

$$L_e \geq \frac{2P}{F_u t} \qquad \text{Ref. 4.2.2, eqn. J3-6}$$

Compute acceptable P:

$$P = \frac{L_e F_u t}{2} = \frac{4.5 \times 58 \times 2}{2} = 261 \text{ kip}$$

The limit on P is $1.5F_u(t)(d) = 1.5 \times 58 \times 2 \times 3.625 = 631$ kip. Ref. 4.2.2., eqn. J3-4.

The 1.7 factor permitted by Ref. 4.2.2, Section N8 is not used. Therefore, the design is conservative.

Net capacity per coupler is: 261 kip

Structure capacity is:

16 x 261 = 4176 kip

as limited by the shear tearout in the embedment support plate at the holes for the coupler.

6.2 Coupler

Material: SA516, Grade 70, F_y = 38 ksi (Section 2.2).

The maximum applied shear load is 515 kip applied in friction to both, the surface of the embedment plate steel and the concrete surface (Section 2.2). Since the distribution is not known between the steel shear and the concrete shear, assume it all acts on the steel.

Therefore, the load path is from the plate, to the coupler, to the concrete.

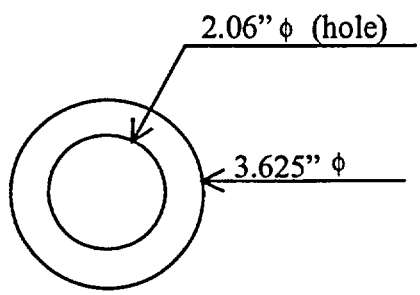

Boss at the top of coupler is 3.625 inch OD, and 2.06 inch ID, (See Figure 3).

Compute shear capacity of coupler as limited by bending of the boss:

Boss Plastic Moment Capacity, Ref. 4.1.5, Table 1, Case 22:

$$A = \frac{\pi}{2}(R_o^2 - R_i^2) = \frac{\pi}{2}(1.8125^2 - 1.03^2)$$

$$A = 3.494 \text{ in}^2$$

Distance to C.G.: $y = \frac{4}{3\pi}\left(\frac{R_o^3 - R_i^3}{R_o^2 - R_i^2}\right) = \frac{4}{3\pi}\left(\frac{1.8125^3 - 1.03^3}{1.8125^2 - 1.03^2}\right) = 0.928 \text{ in}$

∴ Z (Plastic Section Modulus) = 2 x 3.494 x 0.928 = 6.485 in^3

and M_p = 6.485 x 38.0 = 246.4 in-kip

Using 90% $M_p = M_{all}$ = 0.9 x Mp = 0.9 x 246.4 = 221.8 in-kip (Ref. 4.2.1, B.10.1).

Applied Moment:

Stress at inner surface of hole is allowed to reach 1.5 F_u = 87 ksi (Ref. 4.2.2, eqn. J3-4).

Line load along the surface is: w = 3.625 x 87 = 315.4 kip/in

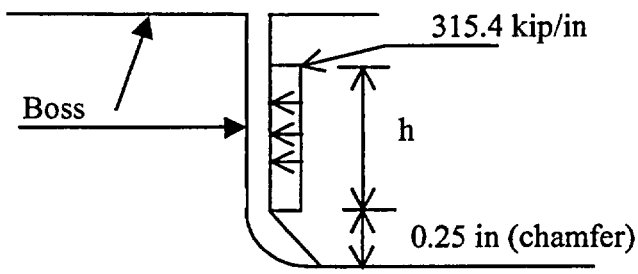

The hole in the embedment support plate that the Coupler fits into has a ¼ inch chamfer, (Ref. 4.1.1).

∴ Applied Moment at Boss is:

$$M_{app} = 315.4 \times h \left(\frac{h}{2} + 0.25 \right) = 157.7\, h^2 + 78.85\, h$$

Now, set $M_{all} = M_{app}$

$$\therefore \quad 221.8 = 157.7\, h^2 + 78.85\, h$$

$$\therefore \quad 0 = 157.7\, h^2 + 78.85\, h - 221.8$$

$$h = \frac{-78.85 + \sqrt{78.85^2 - 4 \times 157.7(-221.8)}}{2 \times 157.7}$$

$$h = \frac{-78.85 + 382.27}{2 \times 157.7} = 0.962 \text{ inch}$$

And, 0.25" + 0.962" = 1.212" < 2.0" (the plate thickness). Therefore, OK.

Allowable load is: (0.962) (315.4) = 303.4 kip

Structure capacity is:

16 x 303.4 = 4854.4 kip,

as limited by bending of the boss on the coupler.

Compute the shear capacity of the Coupler as limited by the shear stress in the boss:

Shear stress in Boss

$$A = \pi\left(1.8125^2 - 1.03^2\right) = 6.99 \text{ in2}$$

$$\alpha = \frac{A_s}{A} \text{ (based upon fully elastic shear stress distribution)}$$

$$\alpha = \frac{0.75\left(R_o^2 + R_i^2\right)}{R_o^2 + R_o R_i + R_i^2} = \frac{0.75\left(1.8125^2 + 1.03^2\right)}{1.8125^2 + 1.8125 \text{x} 1.03 + 1.03^2} = 0.525$$

Holding the maximum shear stress to 0.55 F_y, (Ref. 4.2.1,B.10.1), the shear capacity of the boss is:

V = 0.55 x 38.0 x 6.99 x 0.525 = 76.7 kip

Structure capacity is:

16 x 76.7 = 1227.2 kip

as limited by holding the maximum elastic shear stress to 0.55Fy.

Compute the shear capacity of the Coupler as limited by concrete bearing stress:

After the load goes through the boss, it is in the 5½ inch Φ Coupler, which bears on the concrete This will create bearing stress blocks on the concrete, similar to those of a dowel.

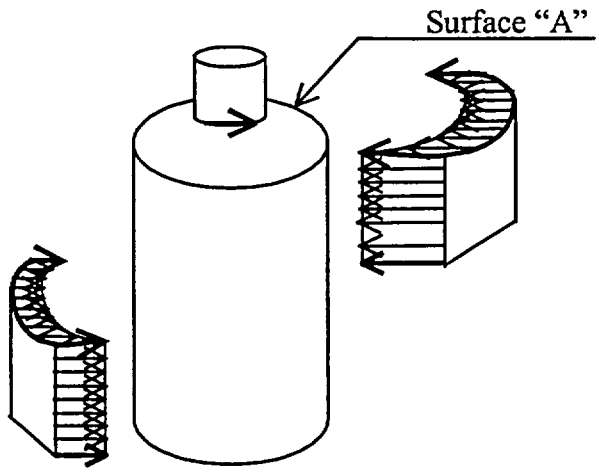

Bearing Stress Blocks

These bearing stress blocks will produce a moment on the surface between the coupler and the embedment support plate - Surface "A"

The cask anchor stud, which is tensioned, also produces a compressive stress on surface A.

This calculation will limit the shear capacity to the value that produces bearing stress blocks, which result in a moment on Surface "A" that just relieves the compressive stress from the stud (offset by the seismic tensile stress.) This is a conservative estimate of strength since it does not allow separation of the embedment plate from the coupler. There is no technical reason why some separation could not be permitted.

Details of the bearing stress block calculation:

Allowable bearing per Ref. 4.2.1, Appendix B.4.5.2:

$f_{ba} = 1.3 \times \Phi \times f'_c = 1.3 \times 0.7 \times 5000 = 4550$ psi

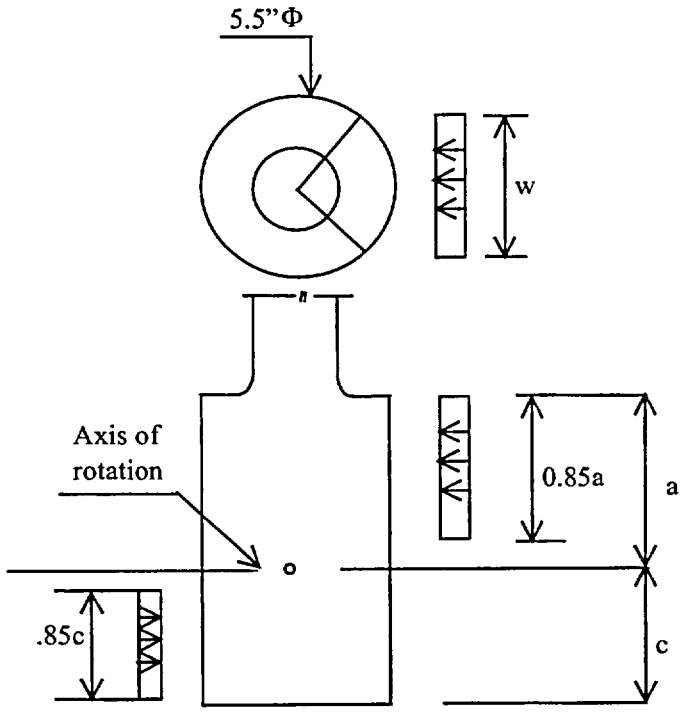

Use a 90° sector to compute width of the bearing stress block.

$$W = 2 \sin 45° \left(\frac{5.5}{2}\right) = 3.89 \text{ inches}$$

Line load is: w = (4.550) (3.89) = 17.7 kip/in

Heights of blocks are limited to 0.85 of the distances to the axis of rotation.

The applied moment is the moment on surface "A" due to the stress blocks, M_{sb}

$$M_{sb} = 17.7\frac{(0.85a)^2}{2} - 17.7 \text{ x } 0.85c \text{ x} \left(9.75 - \frac{0.85c}{2}\right)$$

$$M_{sb} = 6.394\,a^2 - 146.689\,c + 6.394\,c^2$$

Now: $a + c = 9.754$

$\therefore\ c = 9.75 - a$

Substitute:

$$M_{sb} = 6.394a^2 - 146.698(9.75 - a) + 6.394(9.75 - a)^2$$

$$M_{sb} = 6.394a^2 - 1430.22 + 146.689a + 6.394(95.063 - 19.5a + a^2)$$

$$M_{sb} = 6.394a^2 - 1430.22 + 146.689a + 607.83 - 124.683a + 6.394a^2$$

$$M_{sb} = 12.788a^2 + 22.006a - 822.39$$

The allowable moment is computed from the compressive stresses on surface "A".

Compressive force due to preload is 157 kip (Section 2.2).

Maximum seismic load is 62.13 kip (Section 2.2)

Area of A = $\frac{\pi}{4}\left[5.5^2 - (3.625 + 2 \times 0.25)^2\right]$ = 10.39 in^2 , accounting for the $^1/_4$ inch chamfer in the embedment support plate.

$$\therefore p \text{ (pressure on A)} = \frac{157 - 62.13}{10.39} = 9.13 \text{ ksi}$$

Section modulus of A is:

$$S = \frac{I}{c}$$

$$I = \frac{\pi}{4}\left(R_o^4 - R_i^4\right) = \frac{\pi}{4}\left(\left(\frac{5.5}{2}\right)^4 - \left(\frac{4.125}{2}\right)^4\right) = 30.71 \text{ in}^4$$

$$S = \frac{30.71}{2.75} = 11.16 \text{ in}^3$$

$\therefore$ Allowable moment on surface "A" due to the bearing blocks:

M_{all} = (9.13) (11.16) = 101.89 in-kip

Set the applied moment equal to the allowable moment:

$$\therefore M_{sb} = M_{all}$$

$$101.89 = 12.788a^2 + 22.006a - 822.39$$

$$0 = 12.788a^2 + 22.006a - 924.28$$

$$a = \frac{-22.006 + \sqrt{22.006^2 - 4 \times 12.788 \times (-924.28)}}{2 \times 12.788}$$

$$a = \frac{-22.006 + 218.5}{2 \times 12.788}$$

$$a = 7.68 \text{ in}$$

$$c = 9.75 - 7.68 = 2.07 \text{ in}$$

Now, allowable shear on the Coupler as limited by concrete bearing is:

V = 17.7 x 0.85 (7.68 - 2.07) = 84.4 kip

Structure capacity is:

16 x 84.4 = 1350.4 kip

as limited by the concrete bearing stresses and the bearing stress between the coupler and the embed plate.

6.3 Round Bar

Bar must be ductile. ∴ Material to be A36.

Max. seismic load is 62.13 kip (Section 2.2)

∴ Required bar area: $A = \frac{62.13}{0.9(36.0)} = 1.918 \text{ in}^2$ where $\Phi = 0.9$, Ref 4.2.1, Appendix B.10.1

∴ Bar diameter: $\Phi = 1.563$ inch, minimum

The Holtec calculation (Section 2.2) uses a spring rate for these bars.

The bar used in the Holtec calculation is : diameter $\Phi = 2.0$ in
length: L = 48 in

Stiffness of the bar: $k = \dfrac{\left(\dfrac{\pi 2^2}{4}\right)29000000}{48} = 1.898\text{x}10^6 \text{ lb/in}$

Any bar used must be faithful to this stiffness.

The pad is sized to have 7 ½ foot minimum thickness. (It is 7 feet 11 ¾ inch at its thickest point.) The bars must deliver the loads deeply into the pad in order to preclude concrete tensile stresses that might split the concrete.

Try a 2½" Φ bar, 71.13 (82.88 – 2 – 9.75) inches long from the bottom of the coupler to the top of the anchor plate (Figures 2 and 3).

Coupler is 5½" Φ with 2½" Φ hole in it. It is 9 ¾" long.

$$\therefore \quad A_{coupler} = \frac{\pi}{4}\left(5.5^2 - 2.5^2\right) = 18.85 \text{ in}^2$$

$$k_{coupler} = \frac{AE}{L} = \frac{18.85 \text{ x } 29 \text{ x } 10^6}{9.75} = 56.07 \text{ x } 10^6 \text{ lb/in}$$

$$A_{bar} = \frac{\pi(2.5)^2}{4} = 4.909 \text{ in}^2$$

$$k_{bar} = \frac{AE}{L} = \frac{4.909\text{x}29\text{x}10^6}{71.13} = 2.001\text{x}10^6 \text{ lb/in.}$$

Net k:

$$\frac{1}{k} = \frac{1}{k_{coupler}} + \frac{1}{k_{bar}}$$

$$\frac{1}{k} = \frac{1}{56.07\text{x}10^6} + \frac{1}{2.001\text{x}10^6}$$

$$\therefore \; k = 1.932 \text{ x } 10^6 \text{ lb/in}$$

The net k is within 1.8 % of the Holtec value and the net frequency is within 0.9 %, therefore acceptable.

<u>Determination of the bar ductility.</u> Investigate the need for the upset ends:

Check thread strength capacity versus bar yield strength.

Threads are to be 2½ - 4UNC-2A, minor $\Phi = 2.1992$ in

$\therefore A_{thd} = 3.799 \text{ in}^2$ (minimum) $\therefore A_{thd}F_u = 3.799 \times 58 = 220.34$ kip minimum

$\therefore A_{bar} = 4.909 \text{ in}^2$ $\therefore A_{bar}F_y = 4.909 \times 36 = 176.72$ kip minimum

$\therefore$ 220.34 kip > 176.72 kip $\Rightarrow$ Threads will not fail prior to bar yielding.

And, per the Methodology (Section 3.0) 220.34 kip $\approx$ 1.25*176.72 = 220.90 kip

$\therefore$ Bars are ductile, and upset ends are not required.

Per Section B. 3.6.2 and the Commentary to the Code (Ref. 4.2.1), the strength of attachments typically made from A36 steel is better characterized by the yield strength. The factor (0.75) allows for the actual yield versus specified minimum yield (R.B.3.6.2). An increase in the yield stress will not change the conclusion regarding the bar ductility developed above because the ultimate stress will increase proportionally. Therefore, the bars are ductile and upset ends are not required.

Required Ductile Design Stress: $F_{rd} = 36.0/0.75 = 48.0$ ksi and
Required Ductile Design Strength: $P_{rd} = A_{bar} \times F_{rd} = 4.909 \times 48.0 = 235.63$ kip

The length of engagement L_e necessary to prevent stripping of the external thread, must be:

$$L_e = \frac{2xA_t}{3.1416K_n \max\left[\frac{1}{2} + 0.57735n\left(E_s \min - K_n \max\right)\right]}$$ (Ref. 4.1.6, Eqn. (1), Pg. 1490)

where: $A_t = 4.00 \text{ in}^2$ (Ref. 4.1.6, Table 4a, Pg. 1740)
$n = 4$

K_n max = max minor diameter of internal thread, $K_n$max = 2.267 in, (Ref. 4.1.6, Table 3, pg. 1734)

E_s min = min pitch diameter of external thread for the class of thread specified, E_s min = 2.3241 in for Class 1 threads, (Ref. 4.1.6, Table 3, pg. 1734).

$$L_e = \frac{2 \times 4.00}{3.1416 \times 2.267\left[\frac{1}{2} + 0.57735x4(2.3241 - 2.267)\right]} = 1.7777 \text{ in}$$

Therefore, provide at least 1.78 + 2 x 1/n = 2.28 inches of thread to allow for run in/out (See Figure 3).

6.4 Anchor Plate

Size anchor plate at bottom of round bar:

Size for P_{rd} = 235.63 kip, per requirement of Ref. 4.2.1, B.3.6.2

Try a 12 inch square plate:

$$A = 12 \text{ x } 12 - \frac{\pi}{4}\left(2\frac{9}{16}\right)^2 = 138.84 \text{ in}^2$$

$$\sigma_b = \frac{235.63}{138.84} = 1.70 \text{ ksi} < 2\phi\,(.85)(5.000) = 5.95 \text{ ksi}$$ see Ref. 4.2.1, Sect. 10.15.1

$\phi = 0.7$; Ref. 4.2.1, Sect. 9.3.2.4

Size as an equivalent round plate. Distance across flats of nut is 3.75; equivalent inner radius is R_i = 1.875 inch. Thus the applied pressure on the equivalent round plate is σ_{bc}:

$$\therefore \quad \sigma_{bc} = \frac{P_{rd}}{\pi\left(R_o^2 - R_i^2\right)} = \frac{235.63}{\pi\left(6.0^2 - 1.875^2\right)} = 2.309 \text{ ksi}$$

See Roark, 6th edition (Ref. 4.1.5.), Table 24, Case 2l:

$$\frac{b}{a} = \frac{1.875}{6.00} = 0.3125 \Rightarrow \quad K_{Mrb} = 0.40$$

$$M = 0.40 \text{ x } 2.309 \text{ x } 6.00^2 = 33.25 \text{ in-kip/in}$$

Design using 90% of full plastic moment for base plate sizing, (See B.10.1, Appendix, Ref. 4.2.1):

$$\therefore \quad t^2 = \frac{4\text{x}33.25}{0.9\text{x}36} = 4.105 \text{ in}^2$$

t = 2.026 in., use 2 inches since the applied moment is conservatively calculated using elastic computed moment on contained circles.

SUMMARY of shear capacities (Applied shear is 515 kip, section 2.2):

1)	Embedment support plate shear capacity is	4176 kip	> 515 kip
2)	Coupler : Bending capacity of the boss:	4854.4 kip	> 515 kip
	Shear capacity of the boss:	1227.2 kip	> 515 kip
	Concrete bearing capacity:	1350.4 kip	> 515 kip

The round bars are also adequate for the applied loads, have the appropriate stiffness, they are ductile, and meet the ductility requirements of Reference 4.2.1 (Section B.3.6.2).

Therefore, the embedment hardware has sufficient capacity to withstand the loads defined by Ref. 4.1.4 imposed due to the seismic events.

This calculation, to this point, has qualified the embedment support structure for the applied loads and has determined that the round bars are ductile. The direct tensile load path, through the coupler to the anchor plates, including the concrete bearing stresses will not fail prior to the required ductile design strength of the round bar at a tensile load of 235.63 kip.

6.5 Nuts and Bolts

The assembly of the structure is to be performed with the goal of minimizing gaps in those portions of the structure that deliver the loads to the concrete.

The 2 ½ inch round bars are to be installed so that they bottom out on the diaphragm in the coupler between the 2 inch and 2 ½ inch holes. Then they are torqued hand tight. This mates the threads between the rod and the coupler to deliver the tensile loads to the concrete without first removing the gaps between the threads.

The anchor plates are to be attached to the rods with standard hex nuts and jam nuts. The jam nuts are specified to prevent any loosening of the joint prior to concrete placement. Two sets of torques/tensions are provided for installation. One is a lower set that is designed to just seat the parts without any significant stress. This requires the jam nuts. The other set produces the stresses in the pieces that would be used if this were a structural joint, say in building structure. This produces some significant stress in the pieces. In this case the jam nuts are not required since the higher torque is sufficient to prevent any loosening of the joint prior to concrete placement.

The nuts are to be standard heavy hex A536 Grade A nuts for use with the A36 steel, with standard F436 type 1 circular washers.

Further, assembly bolts to hold the couplers in place are to be A307 bolts, to be used with oversize washers.

The maximum torques specified are from Ref. 4.1.7, Table H, which provides torque values for unlubricated threads (nut factor 0.2) and stresses the bolts to 50% of their yield strength.

6.6 Embedment Support Structure Ductility Evaluation/Requirements for the Pad

The following calculation evaluates the pad to ensure that the embedment support structure/cask support pad system will not fail prior to the round bar required ductile design strength of 235.63 kip.

The bar force is P_{rd} = 235.63 kip

The Neutral Axis X_{NA} is shown in its approximate location in the Figure on the next page. It does not have to be located since the maximum value of X_{NA} is $\frac{139.5}{2} = 69.75"$ because it must lie beneath the footprint of the cask.

The d value for the pad is (see Figures 5 and 6):

$$d = 9.75 + 71.13 - 2.815 - 1.27 - 0.815 - 1.27/2$$
$$= 75.345 \text{ in}$$

Now bars 5, 6, 7 and 8 are all within 75.345 inches of the Neutral Axis (see Figure 4) Therefore, the load delivered upward by the anchor plates will all be reacted by the downward force of the compression zone as a compression strut within the concrete.

Hence, only the forces contributed by bars 1, 2, 3 and 4 will produce net shear in the pad cross section. Assume all of the bars are at P_{rd}.

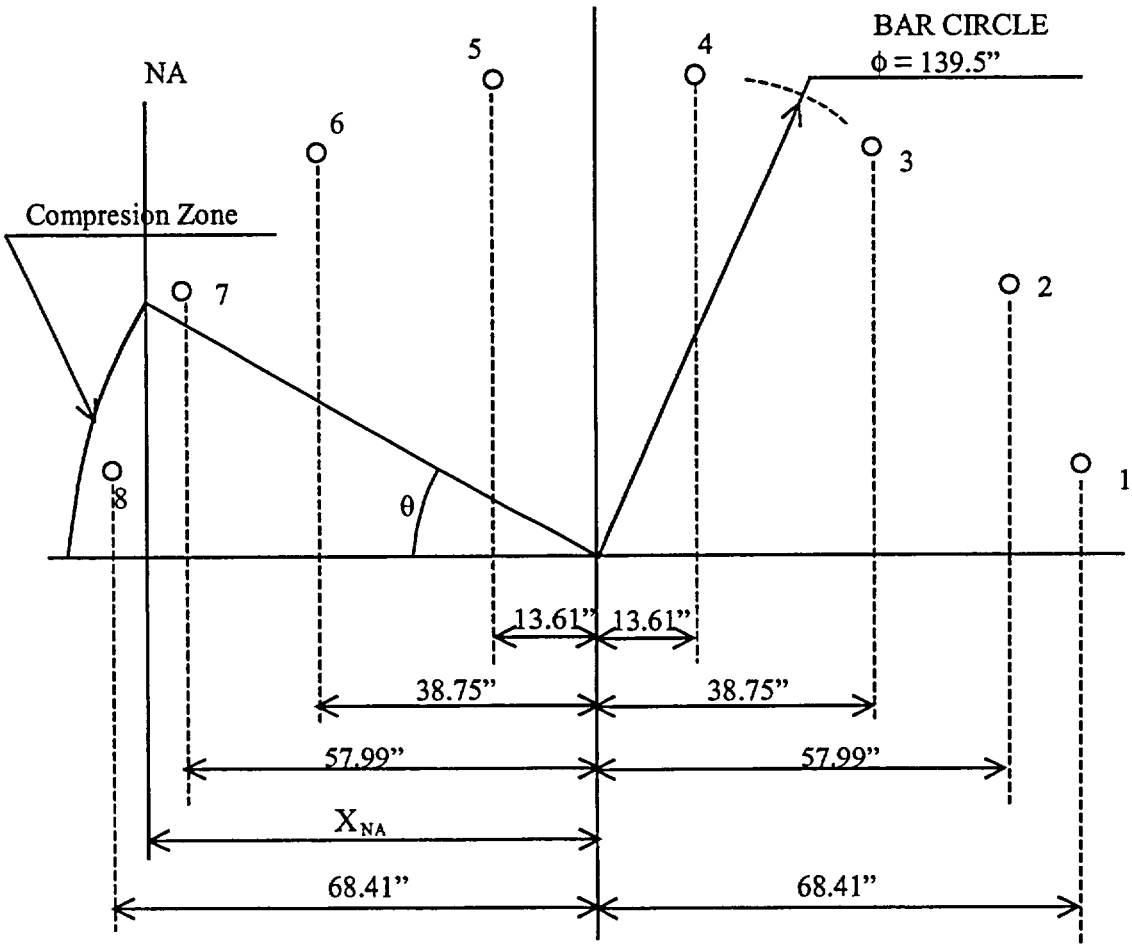

Figure 4
Plan Geometry of the Cask Anchor Studs
(Also, see Figure 1)

Conservatively, compute the total diagonal tension shear to be $V_D = 8 \times P_{rd} - W_{ce}$:

Where: W_{ce} = Effective Weight of Concrete = $W_c\,(1 - 0.4A_v)$
W_c = Concrete weight
A_v = Vertical ZPA = 0.70g (Ref. 4.1.9, Appendix A)

Use a block of concrete from round bar no. 4 to the midpoint of the distance to the adjacent cask.

$$W_c = 0.150 \times 7.5 \times 17 \times (8.5 - 13.61/12) = 140.9 \text{ kip}$$

and

$$V_D = 8 \times 235.63 - 140.9\,(1 - (0.4 \times 0.70)) = 1783.6 \text{ kip}$$

Using the 17 foot (204 inch), center to center distance of casks as the width of concrete section:

$$V_u = \Phi V_c = 2\Phi\sqrt{5000}b75.345 \qquad \text{Ref.4.2.1, 11.3.1.1}$$
$$= 2 \times 0.85\sqrt{5000} \times (204) \times (75.345)$$
$$= 1847.6 \text{ kip} > 1783.6 \text{ kip} \quad \therefore \text{ OK.}$$

Two layers of #10 bars at 9 inches in each direction on the top and on the bottom are required as calculated in Reference 4.1.8. One layer will be located above the anchor plates, see Figures 5 and 6 and the sketch below. Figures 5 and 6 are consistent with Figures 1 and 2 in Reference 4.1.8. In Figures 5 and 6, the top of the concrete is set to be at the bottom of the 2 inch thick top plate of the embedment structure. This is conservative since it minimizes the thickness of the assumed plug of concrete. In Figures 1 and 2 in Reference 4.1.8, the details are more precise. The top of the 2 inch thick top plate is set at El 310 per the drawings and the pad thickness is adjusted to suit the bases for the analyzed conditions. These are 96 inches for the thermal/shrinkage analyses, and 90 inches for the seismic analyses, as explained in Reference 4.1.8.

Assume that cracks could begin at the anchor plates and compute the reinforcement necessary to arrest such a crack using the shear friction provisions of the Code, Ref. 4.2.1, Section 11.7. The shear demand is P_{rd} of 235.63 kips. The plates are 12 inches square and the bars are located 2.815 inches above the plates and are spaced at 9 inches.

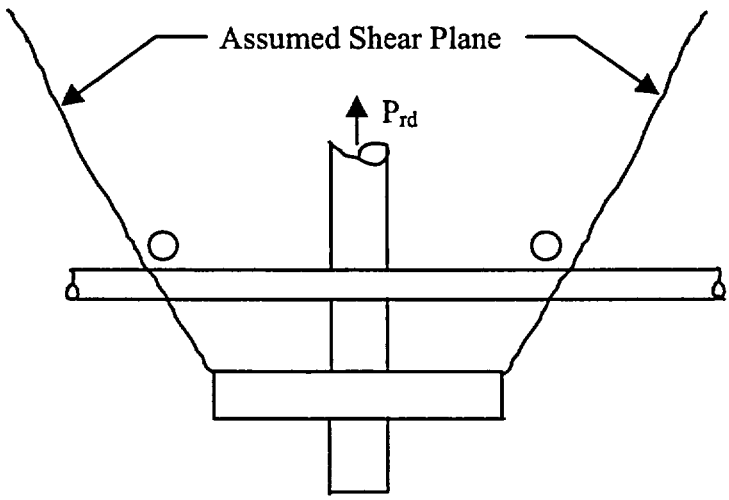

The allowable shear friction capacity with 4 bars crossing (2 in each direction – thus 8 cross sections on the assumed plug of concrete) is:

$$V_c = 8 \times 0.85 \times 1.4 \times 60 \times A_{vf} = 571.2\ A_{vf}$$

and $V_c = 571.2\ A_{vf} \geq 253.63$ kips

Thus, the minimum $A_{vf} = 0.444$ sq. in. Additional steel is required to react the applied tension due to the seismic forces. The bounding value for this force is 21.536 kips , see Reference 4.1.8. The required area for 21.536 kips is 21.536/Fy = 21.536/60 = 0.359 sq. in. Thus, the total area of steel required is A = 0.444 + 0.359 = 0.803 sq. in. and each #10 bar provides 1.27 sq. in. which is 1.5 times the requirement. The anchor plates are 12 inches square, thus with a bar spacing of 9 inches, two bars must cross each of the shear planes. In addition, the mat of steel above the plates is throughout the pad, thus an assumed crack that might begin at a plate and migrate horizontally can not find a location where it can progress vertically through the pad.

Pad reinforcement layout:

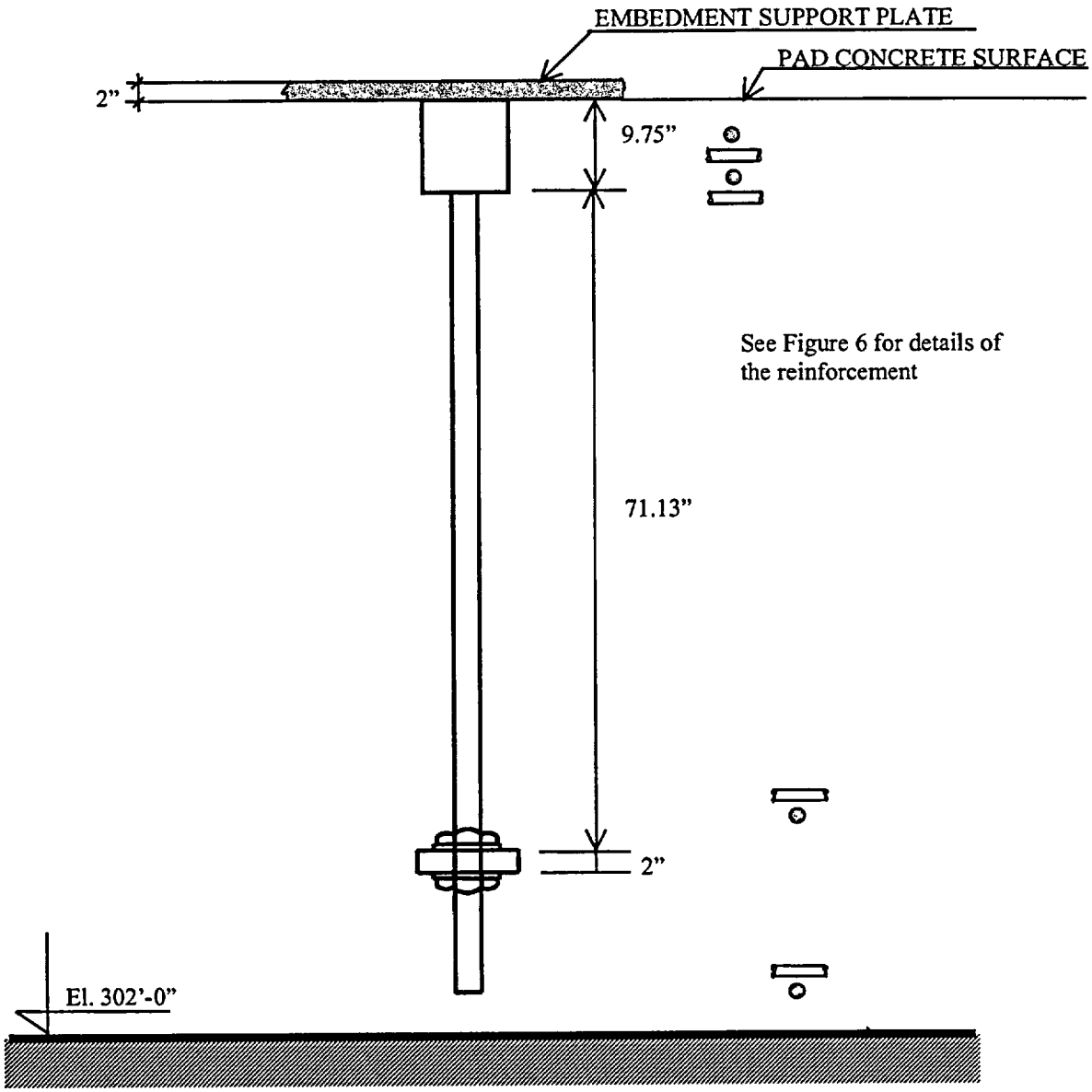

Figure 5
Reinforcement

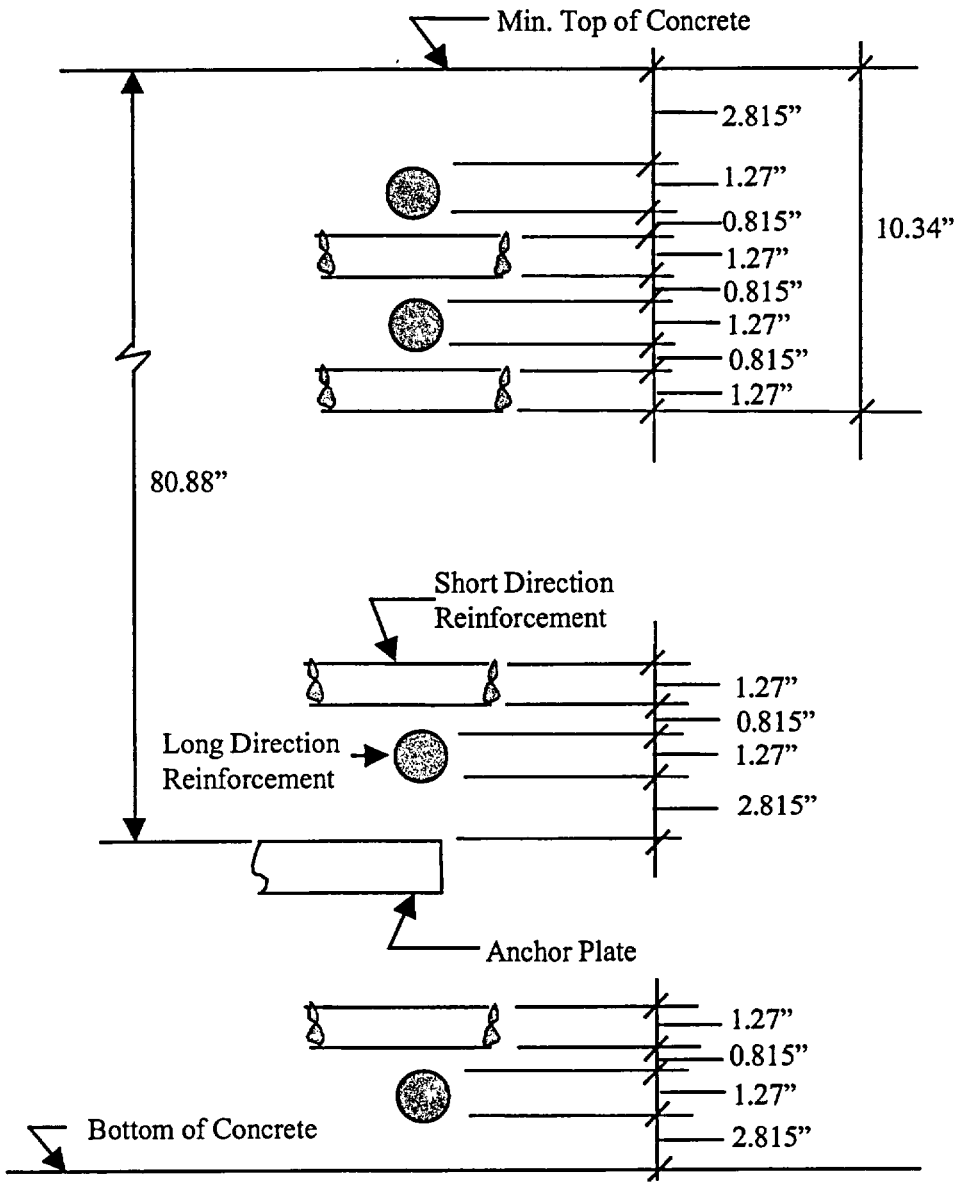

Figure 6
Details of Reinforcement

Thus, ductile failure mode of the embedment support structure is assured and the ductility requirements of ACI- 349, Ref. 4.2.1 have been satisfied.

ENERCON SERVICES, INC.

Appendix DOC-1 to Calculation PGE-009-CALC-001

Originator
Date June 27, 2001
Reissued November 21, 2001

Appendix DOC-1

This Appendix presents the two sketches that provide the structure and details of the Embedment Support Structure. They are:

Sketch No. PGE-009-SK-301, Sh. 1, "Embedment Support Structure, Diablo Canyon Power Plant", Revision 0, dated 6/27/01.

Sketch No. PGE-009-SK-302, Sh. 1, "Embedment Support Structure Details, Diablo Canyon Power Plant", Revision 0, dated 6/27/01.

ITEM	DESCRIPTION	MATERIAL	QTY
1	2" PLATE	ASTM - A36 (SEE NOTE 7)	1
2	2" PLATE	ASTM - A36	16
3	5 1/2 DIA COUPLER,	ASME SA 6 CD 70	16
4	2 1/2 ROUND BAR	ASTM - A36 (SEE NOTE 8)	16
5	2 1/2 TYPE I CIRCULAR WASHER	ASTM - F436	32
6	2 1/2 4 UNC CLASS 2, HEAVY HEX GRADE A NUTS	ASTM - A563	32
7	2 1/2 4 UNC CLASS 2, JAM NUTS	ASTM - A563 (OR EQUIV.)	32
8	2" 4 1/2 UNC CLASS 2, GRADE A BOLTS, 7" LONG	ASTM - A307	16
9	2" OVERSIZED TYPE I CIRCULAR WASHER (SEE NOTE 10)	ASTM - F436 (OR EQUIV.)	16

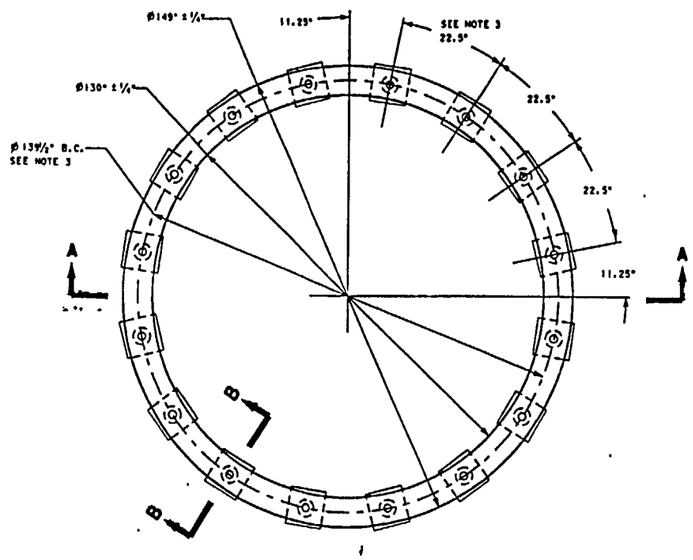

PLAN VIEW
EMBEDMENT SUPPORT PLATE
ITEMS 8 AND 9 NOT SHOWN
FOR CLARITY

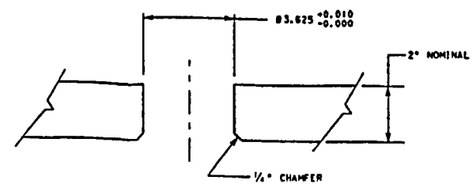

SECTION B-B
N.T.S.
TYP 16 PLACES
COUPLER SHOWN ON DETAIL B
SEE NOTE 2

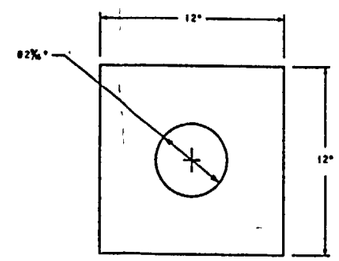

DETAIL D
N.T.S.
TYP 16 PLACES

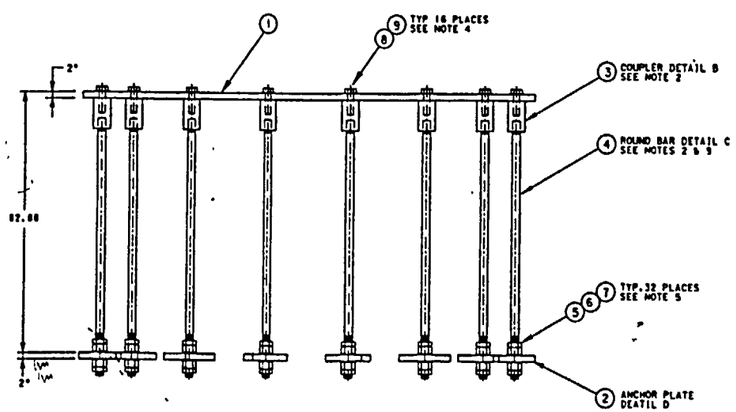

SECTION A-A

NOTES:

1. STRUCTURE IS DESIGNED TO BE ASSEMBLED IN FIELD. HANDLING AND TEMPORARY SUPPORT OF COMPLETED STRUCTURE HAS NOT BEEN CONSIDERED.
2. SEE ENERCON SKETCH PGE-009-SK-302 FOR EMBEDMENT STRUCTURE DETAILS B AND C.
3. THE EMBEDMENT SUPPORT PLATE HOLES ARE DIMENSIONED TO MATCH THE STORAGE CASK HOLES SHOWN ON HOLTEC DRAWING NO.3570,REV 1, AND ARE TO BE LOCATED PER TEMPLATE. PIECE 1 ONLY.
4. INSTALL 8 AND 9 FOR ASSEMBLY. TORQUE ITEM 8 TO MATE PIECES TO SUPPORT ERECTION. TORQUE SHALL NOT EXCEED 1500 FT-LBS. (ASSUMES THREADS ARE NOT LUBRICATED.) REMOVE LATER.
5. HOLDING LOWER NUT 8 IN POSITION, TORQUE UPPER NUT 6 TO A MINIMUM OF 190 FT LBS +/- 40 FT LBS. IF A TENSIONER IS USED, TENSION TO 4560 LBS +/- 960 LBS. (ASSUMES THREADS ARE NOT LUBRICATED.) THEN TIGHTEN LOWER AND UPPER JAM NUTS 7 ACCORDING TO THE MANUFACTURER'S REQUIREMENTS.

   OPTION:
   HOLDING LOWER NUT 6 IN POSITION, TORQUE UPPER NUT 6 TO 2500 FT LBS +/- 500 FT LBS. IF A TENSIONER IS USED, TENSION TO 60,000 LBS +/- 10,000 LBS. (ASSUMES THREADS ARE NOT LUBRICATED.) OMIT JAM NUTS.
6. THREAD LENGTH IS DERIVED FROM VALUE PROVIDED IN HOLTEC REPORT HI-2012618,REV 2,PAGE A-4,AND IS TO BE VERIFIED BY TEST.
7. PLATE SHALL BE ORDERED TO THICKNESS PER ASTM A6. FLATNESS AND WAVINESS REQUIREMENTS SHALL MEET OR EXCEED THE FLATNESS AND WAVINESS REQUIREMENTS SPECIFIED FOR THE CASK BASE PLATE, I.E. ITEM NO.1 ON HOLTEC DRAWING NO. 3570, REV. 1.
8. A36 ONLY ROD OR BAR. ANY MATERIAL SUBSTITUTE, E.G., DOUBLE STAMPED OR UPGRADE REQUIRES PRIOR ENGINEERING APPROVAL.
9. WHEN ROUND BAR 4 IS THREADED TO THE COUPLER, BAR IS TO BE INSERTED UNTIL IT "BOTTOMS OUT" IN THE COUPLER HOLE. THEN TORQUE HAND TIGHT.
10. WASHER TO HAVE 2 1/2 ID, 5"OD,THICKNESS = 0.25" (MIN).

CAD FILE: PGE-009-SK-301 R3
THIS IS A COMPUTER GENERATED DRAWING. DO NOT REVISE MANUALLY.

DRAWING SCALE APPLICABLE ONLY WITH "E" SIZE ORIGINAL.

REV	DATE	DESCRIPTION
3	01/02/03	ANCHOR PL DIM 12" SQ WAS 7½" SQ
2	2/11/01	CHANGED APPROVAL FORM
1	1/26 01	DIM B, B8 WAS 8 .88, CHANGED NOTE 8
0	6/26 00	ORIGINAL ISSUE

PROFESSIONAL ENGINEER

APPROVALS

		DATE
PREPARED	D BABICE	01/02/03
REVIEWED		
ENGINEER		
PROJECT MANAGER		

ENERCON SERVICES, INC.
MOUNT ARLINGTON • NEW JERSEY

EMBEDMENT SUPPORT STRUCTURE
DIABLO CANYON
POWER PLANT

SIZE E4 PGE-009-SK-301 1 OF 3

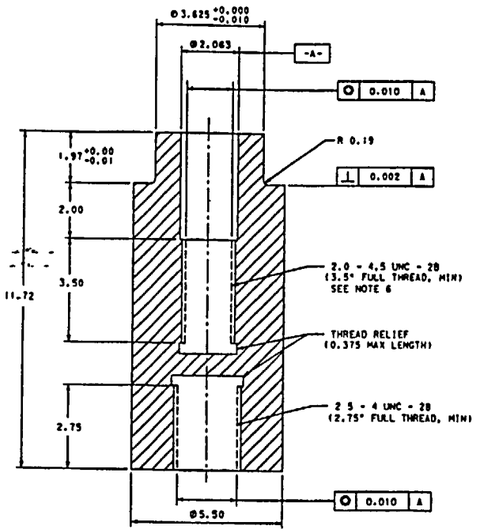

DETAIL B
N.T.S.

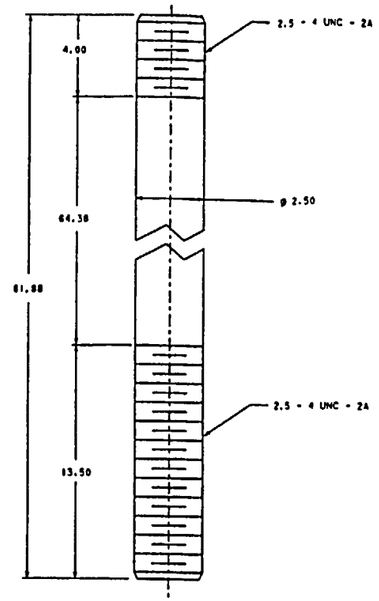

DETAIL C
N.T.S.

NOTES:
FOR NOTES AND BILL OF MATERIAL SEE ENERCON SKETCH PGE-009-SK-301.

CAD FILE: PGE-009-SK-302 R2
THIS IS A COMPUTER GENERATED DRAWING. DO NOT REVISE MANUALLY.

DRAWING SCALE APPLICABLE ONLY WITH E SIZE ORIGINAL.

REV	DATE	DESCRIPTION
2	12/17/01	CHANGED APPROVAL FORMAT
1	11/29/01	DIM 81.88 WAS 80.88, DIM 64.38 WAS 63.38
0	6/26/01	ORIGINAL ISSUE

PROFESSIONAL ENGINEER
CAP DATE:

APPROVALS
DESIGNER DATE
B. RADICE 12/17/01
REVIEWER DATE
E.E. TURNBULL
SUPERVISOR DATE
E.E. TURNBULL
PROJECT MANAGER DATE
E.E. TURNBULL

ENERCON SERVICES, INC.
MOUNT ARLINGTON - NEW JERSEY

EMBEDMENT SUPPORT STRUCTURE
DETAILS
DIABLO CANYON
POWER PLANT

P.O. NUMBER	SCALE	DRAWING NO.	REV	SHEET	OF
	NONE	PGE-009-SK-302	2	1	1

ENERCON
SERVICES, INC.

Appendix DOC-2 to Calculation PGE-009-CALC-001

Originator
Date June 27, 2001
Reissued November 21, 2001

Appendix DOC-2

This Appendix presents the DRAFT of Appendix B (dated 10/01/00) to ACI 349-00. It is provided in the following 32 pages, which are paginated in the lower left and right corners as 349-1 to 349-32.

"Code Requirements for Nuclear Safety Related Concrete Structures (ACI 349-00) and Commentary (ACI 349R-00)"

Appendix B, Anchoring to Concrete

Index

Index for Appendix B commentary

Add a new ASTM reference to Section 3.8.1 for welded studs:

A 108-99 Standard Specification for Steel Bars, Carbon, Cold-Finished, Standard Quality

Add new Section 3.8.7:

3.8.7 - Structural Welding Code – Steel" (AWS D.1.1:2000) of the American Welding Society is declared to be a part of this code as if fully set forth herein.

Renumber existing paragraph in 8.1 to 8.1.1 and add new Section 8.1.2

8.1.2–Anchors for attaching to concrete shall be designed using Appendix B, Anchoring to Concrete.

Add new Section 21.2.7

21.2.7–Anchoring to Concrete

21.2.7.1–Anchors resisting earthquake-induced forces shall conform to the requirements of Appendix B.

Appendix B, Anchoring to Concrete

B.0 –Notation

A_{brg} = bearing area of the head of stud or anchor bolt, in.^{2}

A_{Nc} = projected concrete failure area of one anchor, for calculation of strength in tension, when not limited by edge distance or spacing, as defined in B.5.2.1, in.^{2} [See Fig. RB.5.1(a)]

A_N = projected concrete failure area of an anchor or group of anchors, for calculation of strength in tension, as defined in B.5.2.1, in.^{2} A_N shall not be taken greater than nA_{Nc}. [See Fig. RB.5.1(b)]

A_{se} = effective cross-sectional area of anchor, in.^{2}

A_{sl} = effective cross-sectional area of expansion or undercut anchor sleeve, if sleeve is within shear plane, in.^{2}

A_{Vc} = projected concrete failure area of one anchor, for calculation of strength in shear, when not limited by corner influences, spacing, or member thickness, as defined in B.6.2.1, in.^{2} [(See Fig. RB.6.2(a)]

A_V = projected concrete failure area of an anchor or group of anchors, for calculation of strength in shear, as defined in B.6.2.1, in.^{2} A_V shall not be taken greater than nA_{Vc}. [See Fig. RB.6.2(b)]

C = the compressive resultant force between the embedment and the concrete resulting from factored moment and factored axial load applied to the embedment, lb

c = distance from center of an anchor shaft to the edge of concrete, in.

c_1 = distance from the center of an anchor shaft to the edge of concrete in one direction, in.; Where shear force is applied to anchor, c_1 is in the direction of the shear force. [See Fig. RB.6.2(a)]

c_2 = distance from center of an anchor shaft to the edge of concrete in the direction orthogonal to c_1, in.

c_{max} = the largest ~~of the~~ edge distances ~~that are less than or equal to 1.5 h_{ef}~~, in. ~~(used only for the case of three or four edges)~~.

c_{min} = the smallest ~~of the~~ edge distances ~~that are less than or equal to 1.5 h_{ef}~~, in.

d_o = outside diameter of anchor or shaft diameter of headed stud, or headed ~~anchor~~ bolt, in.

e_N' = eccentricity of normal force on a group of anchors; the distance between the resultant tension load on a group of anchors in tension and the centroid of the ~~areas of the~~ group of anchors loaded in tension, in.; e_N' is always positive. [See Fig. RB.5.2(b and c)]

e_V' = eccentricity of shear force on a group of anchors; the distance between the point of shear force application and the centroid of the group of anchors resisting shear in the direction of the applied shear, in.

f_c' = specified compressive strength of concrete, psi.

f_c = specified tensile strength of concrete, psi;

f_r = modulus of rupture of concrete, psi; (See 9.5.2.3)

f_t = calculated tensile stress in a region of a member, psi;

f_y = specified yield strength of anchor steel, psi;

f_{ut} = specified tensile strength of anchor steel, psi;

f_{utsl} = specified tensile strength of anchor sleeve, psi;

h = thickness of member in which an anchor is anchored, measured parallel to anchor axis, in.

h_{ef} = effective anchor embedment depth, in. (See B.8.5 and Fig. RB.1)

k = coefficient for basic concrete breakout strength in tension;

k_{cp} = coefficient for pryout strength;

ℓ = load-bearing length of anchor for shear, not to exceed $8d_o$, in.
= h_{ef} for anchors with a constant stiffness over the full length of the embedded section, such as headed studs or post-installed anchors with one tubular shell over the full length of the embedment depth;
= $2d_o$ for torque-controlled expansion anchors with a distance sleeve separated from the expansion sleeve;

n = number of anchors in a group;

N_b = basic concrete breakout strength in tension of a single anchor in cracked concrete, as defined in B.5.2.2, lb;

N_{cb} = nominal concrete breakout strength in tension of a single anchor, as defined in B.5.2.1, lb;

N_{cbg} = nominal concrete breakout strength in tension of a group of anchors, as defined in B.5.2.1, lb;

N_n = nominal strength in tension, lb;

N_p = pullout strength in tension of a single anchor in cracked concrete, as defined in B.5.3.4, lb;

N_{pn} = nominal pullout strength in tension of a single anchor, as defined in B.5.3.1, lb;

N_{sb} = side-face blowout strength of a single anchor, lb;

N_{sbg} = side-face blowout strength of a group of anchors, lb;

N_s = nominal strength in tension of a single anchor or group of anchors as governed by the steel strength, as defined in B.5.1.1 or B.5.1.2, lb;

N_u = factored tensile load, lb;

P_a = ~~the f~~actored external axial load on the embedment, lb;

s = anchor center-to-center spacing, in.

s_o = spacing of the outer anchors along the edge in a group, in.

t = thickness of washer or plate, in.

V_b = basic concrete breakout strength in shear of a single anchor in cracked concrete, as defined in B.6.2.2 or B.6.2.3, lb

V_{cb} = nominal concrete breakout strength in shear of a single anchor, as defined in B.6.2.1, lb

V_{cbg} = nominal concrete breakout strength in shear of a group of anchors, as defined in B.6.2.1, lb

V_{cp} = nominal concrete pryout strength, as defined in B.6.3, lb

V_n = nominal shear strength, lb

V_s = nominal strength in shear of a single anchor or group of anchors as governed by the steel strength, as defined in B.6.1.1 or B.6.1.2, lb

V_u = factored shear load, lb

ϕ = strength reduction factor (see B.4.4)

Ψ_1 = modification factor, for strength in tension, to account for anchor groups loaded eccentrically, as defined in B.5.2.4

Ψ_2 = modification factor, for strength in tension, to account for edge distances smaller than $1.5h_{ef}$, as defined in B.5.2.5

Ψ_3 = modification factor, for strength in tension, to account for cracking, as defined in B.5.2.6 and B.5.2.7

Ψ_4 = modification factor, for pullout strength, to account for cracking, as defined in B.5.3.1 and B.5.3.5

Ψ_5 = modification factor, for strength in shear, to account for anchor groups loaded eccentrically, as defined in B.6.2.5

Ψ_6 = modification factor, for strength in shear, to account for edge distances smaller than $1.5c_1$, as defined in B.6.2.6

Ψ_7 = modification factor, for strength in shear, to account for cracking, as defined in B.6.2.7

B.1– Definitions

Anchor–A steel element either cast into concrete or post-installed into a hardened concrete member and used to transmit applied loads, including headed~~straight~~ bolts, ~~hooked bolts (J- or L-bolt),~~ headed studs, expansion anchors, undercut anchors, or specialty inserts.

Anchor group–A number of anchors of approximately equal effective embedment depth with each anchor spaced at less than three times its embedment depth from one or more adjacent anchors.

Anchor pullout strength–The strength corresponding to the anchoring device or a major component of the device sliding out from the concrete without breaking out a substantial portion of the surrounding concrete.

ichment–The structural assembly, external to the surface of the concrete, that transmits loads to or receives load from the anchor.

Brittle steel element–An element with a tensile test elongation of less than 14 ~~%~~percent ~~over a 2 in. gage length~~, or ~~a~~ reduction in area of less than 30 ~~%~~percent , or both.

Cast-in anchor–A headed bolt or headed stud installed before placing concrete.

Concrete breakout strength–The strength corresponding to a volume of concrete surrounding the anchor or group of anchors separating from the member.

Concrete pryout strength–The strength corresponding to formation of a concrete spall behind a short, stiff anchor with an embedded base that is displaced in the direction opposite to the applied shear force.

Distance sleeve–A sleeve that encases the center part of an undercut anchor, a torque-controlled expansion anchor, or a displacement-controlled expansion anchor, but does not expand.

Ductile embedment - An embedment designed for a ductile steel failure in accordance with B.3.6.1.

Ductile steel element–An element with a tensile test elongation of at least 14 ~~%~~percent ~~over a 2 in. gage length~~ and reduction in area of at least 30 ~~%~~percent. A steel meeting ASTM A307 shall be considered ductile.

Edge distance–The distance ~~from the edge of the concrete surface to the center of the nearest anchor.~~

Effective embedment depth–The overall depth through which the anchor transfers force to or from the surrounding concrete. The effective embedment depth will normally be the depth of the concrete failure surface in tension applications. For cast-in headed ~~anchor~~-bolts and headed studs, the effective embedment depth is measured from the bearing contact surface of the head. (See Fig. RB.1)

Embedment - A steel component embedded in the concrete to transmit applied loads to or from the concrete structure. The embedment may be fabricated of plates, shapes, anchors, reinforcing bars, shear connectors, specialty inserts, or any combination thereof.

Expansion anchor–A post-installed anchor, inserted into hardened concrete that transfers loads into or from the concrete by direct bearing or friction or both. Expansion anchors may be torque-controlled, where the expansion is achieved by a torque acting on the screw or bolt; or displacement-controlled, where the expansion is achieved by impact forces acting on a sleeve or plug and the expansion is controlled by the length of travel of the sleeve or plug.

Expansion sleeve–The outer part of an expansion anchor that is forced outward by the center part, either by applied torque or impact, to bear against the sides of the predrilled hole.

5 ~~%~~percent fractile–A statistical term meaning 90 percent confidence that there is 95 percent probability of the actual strength exceeding the nominal strength. ~~Determination shall include the number of tests when evaluating data.~~

~~*Welded H*~~*Headed stud*–A steel anchor ~~made from cold drawn bar stock consisting of a shank and cold formed head, and~~ conforming to the requirements of AWS D1.1; and ~~The anchor is~~ affixed to a plate or similar steel attachment by the stud arc welding process beforeprior to casting ~~into and being embedded within a concrete element.~~

Post-installed anchor–An anchor installed in hardened concrete. Expansion anchors and undercut anchors are examples of post-installed anchors.

Projected area–The area on the free surface of the concrete member that is used to represent the larger base of the assumed rectilinear failure surface.

Side-face blowout strength–The strength of anchors with deeper embedment but thinner side cover corresponding to concrete spalling on the side face around the embedded head while no major breakout occurs at the top concrete surface.

~~*Insert (a*~~*Specialty insert)* –Predesigned and prefabricated cast-in anchors specifically designed for attachment of bolted or slotted connections. Specialty iInserts are often used for handling, transportation, and erection, but are also used for anchoring structural elements.

Supplementary reinforcement – Reinforcement proportioned to tie a potential concrete failure prism to the structural member.

Undercut anchor–A post-installed anchor that derives its tensile strength by the mechanical interlock provided by undercutting of the concrete at the embedded end of the anchor. The undercutting is achieved with a special drill before installing the anchor or alternatively by the anchor itself during its installation.

B.2–Scope

B.2.1–This Appendix provides design requirements for structural embedments in concrete used to transmit structural loads from attachments into concrete members or from one connected concrete member to another by means of tension, shear, bearing, or a combination thereof. Safety levels specified are intended for in-service conditions, rather than for short term handling and construction conditions.

B.2.2–This Appendix applies to both cast-in anchors ~~such as headed studs or headed bolts,~~ and post-installed anchors ~~installed into hardened concrete, such as expansion anchors and undercut anchors.~~ Through bolts, multiple anchors connected to a single steel plate at the embedded end of the anchors ~~bolts anchored to embedded large steel plates~~, adhesive or grouted anchors, and direct anchors such as powder or pneumatic-actuated nails or bolts are not included. Reinforcement used as part of the embedment shall be designed in accordance with other parts of the code.

B.2.3–Headed studs and headed bolts ~~that~~ haveing a geometry that has been demonstrated to result in a pullout strength in uncracked concrete equal or exceeding 1.4 N_p [where N_p is given by Eq. (B-10a)] are included. Post-installed anchors are included provided that B.3.3 is satisfied.

B.2.4–Load applications that are predominantly high-cycle fatigue are not covered by this Appendix.

B.2.5–In addition to meeting the requirements of this chapter, consideration shall be given to the effect of the forces applied to the embedment on the behavior of the overall structure.

B.2.6–The jurisdiction of this code covers steel material below the surface of the concrete and the anchors extending above the surface of concrete. The requirements for the attachment to the embedment shall be in accordance with applicable codes and are beyond the scope of this Appendix.

B.3–General requirements

B.3.1–The embedment and surrounding concrete or grout shall be designed for critical effects of factored loads as determined by elastic analysis. Plastic analysis approaches are permitted where nominal strength is controlled by ductile steel elements, provided that deformational compatibility is taken into account. Assumptions used in distributing loads within the embedment shall be consistent with those used in the design of the attachment.

B.3.2–The design strength of ~~a~~Anchors shall equal or exceed the largest required strength calculated from the applicable ~~be designed for all~~ load combinations ~~outlined~~ in 9.2.

B.3.3–Post-installed structural anchors shall be tested before use to verify that they are capable of sustaining their design strength in cracked concrete under seismic loads. These verification tests shall be conducted by an independent testing agency and shall be certified by a professional engineer with full description and details of the testing programs, procedures, results, and conclusions.

B.3.4–All provisions for anchor axial tension and shear strength apply to normalweight concrete only.

B.3.5–The values of f'_c used for calculations in this Appendix shall not exceed 10,000 psi for cast-in anchors and 8,000 psi for post-installed anchors.

B.3.6–Embedment design

B.3.6.1–Embedment design shall be controlled by the strength of embedment steel. The design strength shall be determined using the strength reduction factor specified in B.4.4(a). It shall be permitted to assume that design is controlled by the strength of embedment steel where the design concrete breakout tensile strength of the embedment, the design side blowout strength of the embedment and the design pullout strength of the anchors exceed the specified ultimate tensile strength of the embedment steel and when the design concrete breakout shear strength exceeds 65 ~~%~~percent of the specified ultimate tensile strength of the embedment steel. The design concrete tensile strength, the design side blow out strength, the design pullout strength and the design concrete breakout shear strength shall be taken as 0.85 times the nominal strengths.

B.3.6.2–As an alternate to B.3.6.1, the attachment shall be designed to yield at a load level corresponding to anchor forces not greater than 75 ~~%~~percent of the anchor design strength specified in B.4.1.3. The anchor design strength shall be determined using the strength reduction factors specified in B.4.4 (b) or (c).

B.3.6.3–It shall be permitted to design anchors as nonductile anchors. The design strength of such anchors shall be taken as 0.60 ϕN_n and 0.60 ϕV_n, where ϕ is given in B.4.4 and N_n and V_n are determined in accordance with B.4.1.

B.3.7–Material and testing requirements for embedment steel shall be specified by the Engineer so that the embedment design is compatible with the intended function of the attachment.

B.3.8–Embedment materials for ductile anchors other than reinforcing bars shall be ductile steel elements.

B.3.9–Ductile anchors that incorporate a reduced section in the tension or shear load path shall satisfy one of the following conditions:

a) The ultimate tensile strength of the reduced section shall be greater than the yield strength of the unreduced section.
b) For bolts, the length of thread in the load path shall be at least two anchor diameters.

B.3.10–The design strength of embedment materials may be increased in accordance with Appendix C for embedments subject to impactive and impulsive loads.

B.3.11–Plastic deformation of the embedment is permitted for impactive and impulsive loading provided the strength of the embedment is controlled by the strength of the embedment steel as specified in B.3.6.

B.4–General requirements for strength of structural anchors

B.4.1–Strength design of ~~structural~~ anchors shall be based either on the computation using design models that satisfy the requirements of B.4.2 or on test evaluation using the 5~~%~~percent fractile of test results for the following:

a) steel strength of anchor in tension (B.5.1);

steel strength of anchor in shear (B.6.1);
c) concrete breakout strength of anchor in tension (B.5.2);
d) concrete breakout strength of anchor in shear (B.6.2);
e) pullout strength of anchor in tension (B.5.3);
f) concrete side-face blowout strength of anchor in tension (B.5.4);
g) concrete pryout strength of anchor in shear (B.6.3)~~; and~~

In addition, anchors shall satisfy the required edge distances, spacings, and thicknesses to preclude splitting failure as prescribed in (B.8).

B.4.1.1–For the design of anchors, except as required in B.3.3,:

$$\phi N_n \geq N_u \qquad \text{(B-1)}$$

$$\phi V_n \geq V_u \qquad \text{(B-2)}$$

B.4.1.2~~2~~–In Eq. (B-1) and (B-2), ϕN_n and ϕV_n are the lowest design strengths determined from all appropriate failure modes. ϕN_n is the lowest design strength in tension of an anchor or group of anchors as determined from consideration of ϕN_s, ϕN_{pn}, either ϕN_{sb} or ϕN_{sbg}, and either ϕN_{cb} or ϕN_{cbg}. ϕV_n is the lowest design strength in shear of an anchor or a group of anchors as determined from consideration of ϕV_s, either ϕV_{cb} or ϕV_{cbg}, and ϕV_{cp}.

B.4.1.3~~2~~–When both N_u and V_u are present, interaction effects shall be considered in accordance with B.4.3.

B.4.2–The nominal strength for any anchor or group of anchors shall be based on design models that result in predictions of strength in substantial agreement with results of comprehensive tests. The materials used in the tests shall be compatible with the materials used in the structure. The nominal strength shall be based on the 5 ~~%~~percent fractile of the basic individual anchor strength. For nominal strengths related to ~~the~~ concrete strength, modifications for size effects, the number of anchors, the effects of close spacing of anchors, proximity to edges, depth of the concrete member, eccentric loadings of anchor groups, and presence or absence of cracking shall be accounted for. Limits on edge distances and anchor spacing in the design models shall be consistent with the tests that verified the model.

B.4.2.1–The effect of supplementary reinforcement provided to confine or restrain the concrete breakout, or both, shall be permitted to be included in the design models ~~of~~ used to satisfy B.4.2.

B.4.2.2–For anchors with diameters not exceeding 2 in., and tensile embedments not exceeding 25 in. in depth, the concrete breakout strength requirements ~~of B.4.2~~ shall be considered satisfied by the design procedure of B.5.2 and B.6.2.

B.4.3–Resistance to combined tensile and shear loads shall be considered in design using an interaction expression that results in computation of strength in substantial agreement with results of comprehensive tests. This requirement shall be considered satisfied by B.7.

B.4.4–Strength reduction factor ϕ for anchor~~sing to~~ in concrete shall be as follows when the load combinations of 9.2 are used:

a) Anchor governed by strength of a ductile steel element

i) Tension Loads 0.80
ii) Shear Loads 0.75

b) Anchor governed by strength of a brittle steel element

i) Tension Loads 0.70
ii) Shear Loads 0.65

ϕ_c Anchor governed by concrete breakout, side-face blowout, pullout or pryout strength 0.75

B.4.5- Bearing Strength

B.4.5.1 - A combination of bearing and shear friction mechanisms shall not be used to develop the nominal shear strength defined in accordance with 9.2 ~~of the Code~~. If the requirements of 9.2.3 are satisfied, however, it is permitted to use the available confining force afforded by the tension anchors in combination with acting (or applied) loads used in determining the shear strength of embedments with shear lugs.

B.4.5.2 - The design bearing strength used for concrete or grout placed against shear lugs shall not exceed 1.3 $\phi f_c'$ using a strength reduction factor ϕ of 0.70. For grouted installations, the value of f_c' shall be the compressive strength of the grout or the concrete, whichever is less.

B.5–Design requirements for tensile loading

B.5.1–Steel strength of anchor in tension

B.5.1.1–The nominal strength of an anchor in tension as governed by the steel, N_s, shall be evaluated by calculations based on the properties of the anchor material and the physical dimensions of the anchor.

B.5.1.2–The nominal strength of an anchor or group of anchors in tension, N_s, shall not exceed:

$$N_s = nA_{se} f_{ut} \qquad \text{(B-3)}$$

where f_{ut} shall not be taken greater than $1.9f_y$ or 125,000 psi.

B.5.2–Concrete breakout strength of anchor in tension

B.5.2.1–The nominal concrete breakout strength, N_{cb}, of an anchor or group of anchors in tension shall not exceed:

(a) for a single anchor:

$$N_{cb} = \frac{A_N}{A_{No}} \psi_2 \psi_3 N_b \qquad \text{(B-4a)}$$

(b) for a group of anchors:

$$N_{cbg} = \frac{A_N}{A_{No}} \psi_1 \psi_2 \psi_3 N_b \qquad \text{(B-4b)}$$

~~N_b is the basic concrete breakout strength value for a single anchor in tension in cracked concrete.~~ A_N is the projected area of the failure surface for the anchor or group of anchors that shall be approximated as the base of the rectilinear geometrical figure that results from projecting the failure surface outward $1.5h_{ef}$ from the centerlines of the anchor, or in the case of a group of anchors, from a line through a row of adjacent anchors. A_N shall not exceed n A_{No}, where n is the number of tensioned anchors in the group. A_{No} is the projected area of the failure surface of a single anchor remote from edges:

$$A_{No} = 9h_{ef}^2 \qquad \text{(B-5)}$$

B.5.2.2–The basic concrete breakout strength, N_b, of a single anchor in tension in cracked concrete shall not exceed:

$$N_b = k\sqrt{f_c'}\, h_{ef}^{1.5} \qquad \text{(B-6a)}$$

where k = 24 for cast-in ~~headed studs, and headed bolts~~anchors

k = 17 for post-installed anchors.

Alternatively, for cast-in headed studs and headed bolts with 11 in. $\leq h_{ef} \leq$ 25 in., the basic concrete breakout strength of a single anchor in tension in cracked concrete shall not exceed:

$$N_b = 16\sqrt{f'_c}\,h_{ef}^{5/3} \qquad \text{(B-6b)}$$

~~where k = 16.~~

B.5.2.3 For the special case of anchors in an application with three or four edges and the largest edge distance $c_{max} \leq 1.5\,h_{ef}$, the embedment depth h_{ef} used in Eq. (B-5), (B-6), (B-7), and (B-8) shall be limited to $c_{max}/1.5$.

B.5.2.4 The modification factor for eccentrically loaded anchor groups is:

$$\psi_1 = \frac{1}{(1+\frac{2e'_N}{3h_{ef}})} \leq 1 \qquad \text{(B-7)}$$

Eq. (B-7) is valid for $e'_N \leq s/2$.

If the loading on an anchor group is such that only some anchors are in tension, only those anchors that are in tension shall be considered when determining the eccentricity, e'_N, for use in Eq. (B-7).

In the case where eccentric loading exists about two axes, the modification factor, ψ_1, shall be computed for each axis individually and the product of these factors used as ψ_1 in Eq. (B-4b).

ψ_1 is equal to 1.0 for a ductile embedment analyzed using only linear (elastic) analysis techniques.

B.5.2.5 The modification factor for edge effects is:

$$\psi_2 = 1 \text{ if } c_{min} \geq 1.5\,h_{ef} \qquad \text{(B-8a)}$$

$$\psi_2 = 0.7 + 0.3\frac{c_{min}}{1.5\,h_{ef}} \text{ if } c_{min} < 1.5\,h_{ef} \qquad \text{(B-8b)}$$

B.5.2.6 When an anchor is located in a region of a concrete member where analysis indicates no cracking ($f_t < f_r$) under the load combinations specified in 9.2 with load factors taken as unity, the following modification factor shall be permitted:

$\psi_3 =$ 1.25 for cast-in anchors ~~headed studs and headed bolt; and~~

$\psi_3 =$ 1.4 for post-installed anchors.

~~B.5.2.7~~ When analysis indicates cracking under the load combinations specified in 9.2 with load factors taken as unity, ψ_3 shall be taken as 1.0 for both cast-in anchors and post-installed anchors. The cracking in the concrete shall be controlled by flexural reinforcement distributed in accordance with 10.6.4, or equivalent crack control shall be provided by confining reinforcement.

B.5.2.7~~8~~ When an additional plate or washer is added at the head of the anchor, it shall be permitted to calculate the projected area of the failure surface by projecting the failure surface outward $1.5h_{ef}$ from the effective perimeter of the plate or washer. The effective perimeter shall not exceed the value at a section projected outward more than t from the outer edge of the head of anchor, where t is the thickness of the washer or plate.

2.89 - For post-installed anchors, it shall be permitted to use a coefficient, k, in equation B-~~6~~7a based on the 5 ~~%~~percent fractile of results from product-specific tests. For such cases, the modification factor, ψ_3, shall be based on a direct comparison between the average ultimate failure loads and the characteristic loads based on the 5 ~~%~~percent fractile of product-specific testing in cracked concrete and otherwise identical product-specific testing in uncracked concrete.

B.5.3–Pullout strength of anchor in tension

B.5.3.1–The nominal pullout strength, N_{pn}, of an anchor in tension shall not exceed:

$$N_{pn} = \psi_4 N_p \qquad \text{(B-9)}$$

B.5.3.2–For post-installed expansion and undercut anchors, it is not permissible to calculate the pullout strength in tension. Values of N_p shall be based on the 5 ~~%~~percent fractile of results of tests performed and evaluated according to B.3.3.

B.5.3.3–For single cast-in headed studs and headed bolts, it shall be permitted to evaluate the pullout strength in tension using B.5.3.4.

B.5.3.4–The pullout strength in tension of a single headed stud or headed bolt, N_p, for use in Eq. (B-9), shall not exceed:

$$\cancel{N_p = A_b 8 f_c'} \qquad \text{(B-10a)}$$

$$N_p = A_{brg} 8 f_c'$$

B.5.3.5–For an anchor located in a region of a concrete member where analysis indicates no cracking ($f_t < f_r$) under the load combinations specified in 9.2 with load factors taken as unity, the following modification factor shall be permitted:

$$\psi_4 = 1.4$$

Otherwise, ψ_4 shall be taken as 1.0.

B.5.4–Concrete side-face blowout strength of a headed anchor in tension

B.5.4.1–For a single headed anchor with deep embedment close to an edge, the nominal side-face blowout strength N_{sb} shall not exceed:

$$N_{sb} = 160 c_a \sqrt{A_{brg}} \sqrt{f_c'} \qquad \text{(B-11)}$$

If the single anchor is located at a perpendicular distance, c_2, less than 3c from an edge, the value of N_{sb} shall be modified ~~by~~ multiplied~~ying~~ it by the factor $(1 + c_2/c)/4$ where $1 \le c_2/c \le 3$.

B.5.4.2–For multiple-headed anchors with deep embedment close to an edge ($e < 0.4\, l_{se}$) and spacing between anchors less than 6c, the nominal strength of the outer anchors along the edge in the group for a side-face blowout failure N_{sbg} shall not exceed:

$$N_{sbg} = \left(1 + \frac{s_o}{6c}\right) N_{sb} \qquad \text{(B-12)}$$

where s_o = spacing of the outer anchors along the edge in the group and N_{sb} is obtained from Eq. (B-11) without modification for a perpendicular edge distance. The nominal strength of the group of fasteners shall be taken as the nominal strength of the outer fasteners along the edge multiplied by the number of rows parallel to the edge.

B.6–Design requirements for shear loading

B.6.1–Steel strength of anchor in shear

B.6.1.1–The nominal strength of an anchor in shear as governed by steel, V_s, shall be evaluated by calculations based on the properties of the anchor material and the physical dimensions of the anchor.

B.6.1.2–The nominal strength, V_n of an anchor or group of anchors in shear shall not exceed:

(a) for cast-in ~~welded~~-headed stud anchors:

$$V_s = nA_{se} f_{ut} \qquad \text{(B-13)}$$

where f_{ut} shall not be taken greater than $1.9f_y$ or 125,000 psi.

(b) for cast-in ~~threaded~~ headed bolt anchors:

$$V_s = n0.6A_{se} f_{ut} \qquad \text{(B-14)}$$

where f_{ut} shall not be taken greater than $1.9f_y$ or 125,000 psi.

(c) for post-installed anchors:

$$V_s = n(0.6\,A_{se} f_{ut} + 0.4\,A_{st} f_{uts}) \qquad \text{(B-15)}$$

where f_{ut} shall not be taken greater than $1.9f_y$ or 125,000 psi.

When the anchor is installed so that the critical failure plane does not pass through the sleeve, the area of the sleeve in Eq. (B-15) shall be taken as zero.

B.6.1.3–Where anchors are used with built-up grout pads, the nominal strengths of B.6.1.2 shall be reduced by a 0.80 factor~~20 %~~.

B.6.1.4 - Friction between the baseplate and concrete may be considered to contribute to the nominal shear strength of the connection. The nominal shear strength resulting from friction between the baseplate and concrete (that is, without any contribution from anchors) may be taken as 0.40C .

B.6.2–Concrete breakout strength of anchor in shear

B.6.2.1–The nominal concrete breakout strength, V_{cb}, in shear of an anchor or group of anchors shall not exceed:

(a) for shear force perpendicular to the edge on a single anchor:

$$V_{cb} = \frac{A_V}{A_{Vo}} \psi_6 \psi_7 V_b \qquad \text{(B-16a)}$$

(b) for shear force perpendicular to the edge on a group of anchors:

$$V_{cbg} = \frac{A_V}{A_{Vo}} \psi_5 \psi_6 \psi_7 V_b \qquad \text{(B-16b)}$$

(c) for shear force parallel to an edge, V_{cb} or V_{cbg} shall be permitted to be twice the value for shear force determined from Eq. (B-16a or b) respectively with ψ_6 taken equal to 1.

~~(c)~~ (d) for anchors located at a corner, the limiting nominal concrete breakout strength shall be determined for each edge and the minimum value shall be used.

~~is the basic concrete breakout strength value for a single anchor.~~ A_v is the projected area of the failure surface on the side of the concrete member at its edge for a single anchor or a group of anchors. It shall be permitted to evaluate this area as the base of a truncated half pyramid projected on the side face of the member where the top of the half pyramid is given by the axis of the anchor row selected as critical. The value of c_1 shall be taken as the distance from the edge to this axis. A_v shall not exceed nA_{vo}, where n is the number of anchors in the group.

A_{vo} is the projected area for a single anchor in a deep member and remote from edges in the direction perpendicular to the shear force. It shall be permitted to evaluate this area as the base of a half pyramid with a side length parallel to the edge of $3c_1$ and a depth of $1.5\ c_1$:

$$A_{vo} = 4.5c_1^2 \qquad \text{(B-17)}$$

Where anchors are located at varying distances from the edge and the anchors are welded to the attachment so as to distribute the force to all anchors, it shall be permitted to evaluate the strength based on the distance to the farthest row of anchors from the edge. In this case, it shall be permitted to base the value of c_1 on the distance from the edge to the axis of the farthest anchor row which is selected as critical, and all of the shear shall be assumed to be carried by this critical anchor row alone.

B.6.2.2–The basic concrete breakout strength, V_b, in shear of a single anchor in cracked concrete shall not exceed:

$$V_b = 7\left(\frac{\ell}{d_o}\right)^{0.2}\sqrt{d_o}\sqrt{f_c'}\,c_1^{1.5} \qquad \text{(B-18a)}$$

B.6.2.3–For cast-in headed studs, or headed bolts, that are rigidly welded to steel attachments having a minimum thickness equal to the greater of ⅜ in. or half of the anchor diameter, ~~unless determined in accordance with B.4.2,~~ the basic concrete breakout strength, V_b, in shear of a single anchor in cracked concrete shall not exceed:

$$V_b = 8\left(\frac{\ell}{d_o}\right)^{0.2}\sqrt{d_o}\sqrt{f_c'}\,c_1^{1.5} \qquad \text{(B-18b)}$$

provided that:

a) for groups of anchors, the strength is determined based on the strength of the row of anchors farthest from the edge;

~~c)~~ b) the center-to-center spacing of the anchors is not less than 2.5 in.

~~c)~~ c) supplementary reinforcement is provided at the corners if $c_2 \le 1.5h_{ef}$.

B.6.2.4–For the special case of anchors ~~in a thin member~~ influenced by three or more edges, the edge distance c_1 used in Eq. (B-17), (B-18), (B-19), and (B-20) shall be limited to h/1.5.

B.6.2.5–The modification factor for eccentrically loaded anchor groups is:

$$\psi_5 = \frac{1}{1+\frac{2e_v'}{3c_1}} \le 1 \qquad \text{(B-19)}$$

Eq. (B-19) is valid for $e_v' \le s/2$.

B.6.2.6–The modification factor for edge effects is:

$$\psi_6 = 1 \text{ if } c_2 \ge 1.5\,c_1 \qquad \text{(B-20a)}$$

$$\psi_6 = 0.7 + 0.3\frac{c_2}{1.5\,c_1} \quad if\ c_2 < 1.5\,c_1 \qquad \text{(B-20b)}$$

B.6.2.7–For anchors located in a region of a concrete member where analysis indicates no cracking ($f_t < f_r$) under the load combinations specified in 9.2 with load factors taken as unity, the following modification factor shall be permitted:

$$\psi_7 = 1.4$$

For anchors located in a region of a concrete member where analysis indicates cracking under the load combinations specified in 9.2 with load factors taken as unity, the following modification factors shall be permitted: ~~In order to be considered as edge reinforcement, the reinforcement shall be designed to intersect the concrete breakout failure surface:~~

$\psi_7 = 1.0$ for anchors in cracked concrete with no supplementary ~~edge~~ reinforcement or supplementary ~~edge~~ reinforcement smaller than a #4 bar;

$\psi_7 = 1.2$ for anchors in cracked concrete with supplementary ~~edge~~ reinforcement of a #4 bar or greater between the anchor and the edge;

$\psi_7 = 1.4$ for anchors in cracked concrete with supplementary ~~edge~~ reinforcement of a #4 bar or greater between the anchor and the edge and with the supplementary ~~edge~~ reinforcement enclosed within stirrups spaced at not more than 4 in.

To be considered as supplementary reinforcement, the reinforcement shall be designed to ~~intersect the concrete breakout failure surface defined in B.5.2.1.~~

B.6.3–Concrete pryout strength of anchor in shear

B.6.3.1–The nominal pryout strength, V_{cp}, shall not exceed:

$$V_{cp} = k_{cp} N_{cb} \qquad \text{(B-21)}$$

where

k_{cp} = 1.0 for $h_{ef} < 2.5$ in.
k_{cp} = 2.0 for $h_{ef} \geq 2.5$ in.
and N_{cb} shall be determined from Eq. (B-4a), 1b.

B.7–Interaction of tensile and shear forces

Unless determined in accordance with B.4.3, anchors or groups of anchors that are subjected to both shear and axial loads shall be designed to satisfy the requirements of B.7.1 through B.7.3. The value of ϕN_n shall be as defined in B.4.1.2. ~~the smallest of the steel strength of the anchor in tension, concrete breakout strength of anchor in tension, pullout strength of anchor in tension, and side face blowout strength. The value of ϕV_n shall be the smallest of the steel strength of anchor in shear, the concrete breakout strength of anchor in shear, and the pryout strength.~~

B.7.1–If $V_u \leq 0.2\phi V_n$, then full strength in tension shall be permitted: $\phi N_n \geq N_u$.

B.7.2–If $N_u \leq 0.2\phi N_n$, then full strength in shear shall be permitted: $\phi V_n \geq V_u$.

B.7.3–If $V_u > 0.2\phi V_n$ and $N_u > 0.2\phi N_n$, then:

$$\frac{N_u}{\phi N_n} + \frac{V_u}{\phi V_n} \leq 1.2 \qquad \text{(B-22)}$$

B.8–Required edge distances, spacings, and thicknesses to preclude splitting failure

Minimum spacings and edge distances for anchors and minimum thicknesses of members shall conform to B.8.1 through B.8.6, unless supplementary reinforcement is provided to control splitting.

B.8.1–Minimum center-to-center spacing of cast-in ~~headed~~-anchors shall be $4d_o$ for untorqued anchors and $6d_o$ for torqued anchors.

B.8.2–Minimum center-to-center spacing of post-installed anchors shall be based on tests performed according to B.3.3.

B.8.3–Minimum edge distances for cast-in ~~headed~~-anchors that will not be torqued shall satisfy the minimum cover requirements for reinforcement in 7.7. Minimum edge distances for cast-in ~~headed~~-anchors that will be torqued shall be based on the greater of the minimum cover requirements for reinforcement in 7.7 or $6d_o$.

B.8.4–Minimum edge distances for post-installed anchors shall be based on the greater of the minimum cover requirements for reinforcement in 7.7 or the minimum edge distance requirements for the products as determined by tests performed according to B.3.3, and shall not be less than two times the maximum aggregate size.

B.8.5–The value of h_d for an expansion or undercut post-installed anchor shall not exceed the greater of either ⅔ of the member thickness or the member thickness less 4 in.

B.8.6–Project drawings and project specifications shall specify use of anchors with a minimum edge distance as assumed in design.

B.9–Installation of anchors

B.9.1–Anchors shall be installed in accordance with the project drawings and project specifications and the requirements stipulated by the anchor manufacturer.

B.9.2–The engineer shall establish an inspection program to verify proper installation of the anchors.

B.9.3–The engineer shall establish a welding procedure to avoid excessive thermal deformation of an embedment that, if welded to the attachment, could cause spalling or cracking of the concrete or pullout of the anchor.

B.10–Structural plates, shapes, and specialty inserts

B.10.1–The design strength of embedded structural shapes, fabricated shapes, and shear lugs shall be determined based on fully yielded conditions, and using a ϕ factor of 0.9 for tension, compression and bending (and combinations thereof), and 0.55 for shear.

B.10.2–For structural shapes and fabricated steel sections, the web shall be designed for the shear and the flanges shall be designed for the tension, compression, and bending.

B.10.3–The nominal strength of specialty inserts shall be based on the 5%percent fractile of results of tests performed and evaluated according to B.3. Embedment design shall be according to B.3 with strength reduction factors according to B.4.4.

B.11–Shear capacity of embedded plates and shear lugs

B.11.1–General

The shear strength of grouted or cast-in-place embedments with shear lugs shall include consideration of the bearing strength of the concrete or grout placed against the shear lugs, the direct shear strength of the concrete or grout placed between shear lugs and the confinement afforded by the tension anchors in combination with external loads acting across

potential shear planes. Shear loads toward free edges and displacement compatibility between shear lugs shall also be considered. When multiple shear lugs are used to establish the design shear strength in a given direction, the magnitude of the allotted shear to each lug shall be in direct proportion to the total shear, the number of lugs, and the shear stiffness of each lug.

B.11.2–Shear toward free edge

For shear lugs bearing toward a free edge, unless reinforcement is provided to develop the required strength, the design shear strength for each lug shall be determined based on a uniform tensile stress of $-4\phi\sqrt{f'_c}$ acting on an effective stress area defined by projecting a 45 degree plane from the bearing edges of the shear lug or base plate to the free surface. The bearing area of the shear lug or plate edge shall be excluded from the projected area. ~~This strength shall be reduced by a ϕ factor of 0.85.~~ The ϕ factor shall be taken as 0.85.

B.11.3–Shear strength of embedments with embedded base plates

For embedments having a base plate whose contact surface is below the surface of the concrete, shear strength shall be calculated using the shear-friction provisions of 11.7 ~~of this code~~ (as modified by this section), using the following shear-friction coefficients:

Base plate without shear lugs	0.9
Base plate with shear lugs that is designed to remain elastic	1.4

The tension anchor steel area required to resist external loads shall be added to the tension anchor steel area required due to shear friction.

B.12–Grouted embedments

B.12.1–Grouted embedments shall meet the applicable requirements of this chapter.

B.12.2–For general grouting purposes the material requirements for cement grout shall be in accordance with Chapter 3 ~~of this code~~. The use of special grouts, containing epoxy or other binding media, or those used to achieve properties such as high strength, low shrinkage or expansion, or early strength gain, shall be qualified for use by the engineer and specified in contract documents.

B.12.3–Grouted embedments shall be tested to verify embedment strength. Grouted embedments installed in tension zones of concrete members shall be capable of sustaining design strength in cracked concrete. Tests shall be conducted by an independent testing agency and shall be certified by a professional engineer with full description and details of the testing programs, procedures, results, and conclusions.

B.12.4–Grouted embedments shall be tested for the installed condition by testing randomly selected grouted embedments to a minimum of 100%percent of the required strength. The testing program shall be established by the engineer.

B.12.5–The tests required by B.12.3 and B.12.4 may be waived by the engineer if tests and installation data are available to demonstrate that the grouted embedment will function as designed or if the load transfer through the grout is by direct bearing or compression.

Appendix B Commentary - Anchoring to Concrete

ACI 349 Appendix B was developed in the mid 1970s following review of design methods and available test data. Since that time there has been extensive additional test data. In 1992, a task group was formed to compare the Appendix B methodology to that of the Concrete Capacity Design (CCD) Method for all available tests results. The review indicated that concrete breakout failures were predicted better (for example, for bolt groups, and edge conditions) by the new prediction equations in the Concrete Capacity Design Method than by the current design method of Appendix B. After extensive review, ACI 349 chose to incorporate the Concrete Capacity Design Method to improve the requirements of the previous Appendix B. References B.1 and B.2 describe the background and show comparisons of this method against the methods specified in ACI 349-97 Appendix B.

Evaluations of the methodology of ACI 349 Appendix B and the Concrete Capacity Design Method are provided in References B.3 to B.6. These evaluations are based on the provisions included in the 1976, 1985, and 1997 editions of Appendix B. This work and additional testing is described in Reference B.7. Comparisons between the methods are shown in RB.13. These comparisons show the following key differences in the requirements:

- The concrete breakout strength increases with embedment depth. In Appendix B (ACI 349-97) the increase was proportional to the square of the embedment depth. In the Concrete Capacity Design Method the increase is proportional to the embedment depth to the power of 1.5. The methods give similar results at about 5 in. of embedment depth; the Concrete Capacity Design Method is more conservative for increased embedment depth.

- The concrete breakout strength is affected by the spacing to adjacent anchors and edges. The Concrete Capacity Design Method assumes no interaction when the spacing of adjacent anchors is three times the embedment depth, whereas Appendix B (ACI 349-97) assumed two times the embedment depth. The Concrete Capacity Design Method assumes no interaction when the anchors are installed with edge distance greater than 1.5 times the embedment depth, while Appendix B (ACI 349-97) assumed 1.0 times the embedment depth.

RB.0 - Notation

A_{se} = the effective stress area, A_{se}, may be different in tension and shear. Reductions in cross section due to threading or an expansion mechanism affect the tension area but may not affect the effective shear area. The effective cross-sectional area of an anchor should be provided by the manufacturer of expansion anchors with reduced cross-sectional area for the expansion mechanism. For threaded bolts, ANSI/ASME B1.1[B.8] defines A_{se} as:

$$A_{se} = \frac{\pi}{4}\left(d_o - \frac{0.9743}{n_t}\right)^2$$

where n_t is the number of threads per in.

e_N = eccentricity of normal force on a group of anchors; the distance between the resultant tension load on a group of anchors in tension and the centroid of the areas of the group of anchors loaded in tension, in. [See Fig. RB.5.2(b and c)]

h_{ef} = effective embedment depths for a variety of anchor types are shown in Fig. RB.1.

K_c = confinement factor (RB.11)

RB.1 – Definitions

Brittle steel element and Ductile steel element – The 14% elongation shall be measured over the gage length specified in the appropriate ASTM standard for the steel.

~~5 % Fractile – The 5 %-fractile, $F_{5\%} = F_m(1-Kv)$, where F_m is the mean capacity from tests, v is the coefficient of variation and K depends on the number of tests, n.~~ 5 percent fractile – The determination of the coefficient K associated with the 5 percent fractile, $\bar{x} - K\sigma$, depends on the number of tests, n, used to compute $\bar{x}$ and σ. Values of K range, for example, from 1.645 for $n = \infty$, to 2.010 for $n = 40$, and 2.568 for $n = 10$.

RB.2 – Scope

RB.2.1 – ACI 349 uses the term embedments to cover a broad scope that includes anchors, embedded plates, shear lugs, grouted embedments, and specialty inserts. It covers the same scope as was included in the 1997 code.

RB.2.3 – Typical cast-in headed studs and headed bolts with geometries consistent with ANSI/ASME B1.1,[B.8] B18.2.1,[B.9] and B18.2.6[B.10] have been tested and have proven to behave predictably, so calculated pullout values are acceptable. Post-installed anchors do not have predictable pullout capacities, and therefore are required to be tested.

RB.2.6 – Typical embedment configurations are shown in Fig. RB.2.1 and RB.2.2. These figures also indicate the extent of the embedment within the jurisdiction of this code.

RB.3 – General requirements

RB.3.1 – When the strength of an anchor group is governed by breakage of the concrete, the behavior is brittle and there is limited redistribution of the forces between the highly stressed and less stressed anchors. In this case, the theory of elasticity is required to~~should~~ be used assuming the attachment that distributes loads to the anchors is sufficiently stiff. The forces in the anchors are considered to be proportional to the external load and its distance from the neutral axis of the anchor group.

If anchor strength is governed by ductile yielding of the anchor steel, significant redistribution of anchor forces can occur. In this case, an analysis ~~assuming~~ based on the theory of elasticity will be conservative. References B.11 to B.13 discuss nonlinear analysis, using the theory of plasticity for the determination of the capacities of ductile anchor groups.

RB.3.3 - Many anchors in a nuclear power plant must perform as designed with high confidence, even when exposed to significant seismic loads. To prevent unqualified anchors being used in connections which must perform with high confidence under significant seismic load, all anchors are required to be qualified for seismic-zone usage by passing simulated seismic tests. The qualification should be performed consistent with the provisions of this Appendix and should be reviewed by a professional engineer experienced in anchor technology. Typical simulated seismic-testing methods are described in Reference B.7. For a post-installed anchor to be used in conjunction with the requirements of this Appendix, the results of tests have to indicate that pullout failures exhibit an acceptable load-displacement characteristic or that pullout failures are precluded by another failure mode. ACI 349 requires that all post-installed anchors be qualified, by independent tests, for use in cracked concrete. Anchors qualified for use only in uncracked concrete are not recommended in nuclear power plant structures.

The design of the anchors for impactive or impulsive loads is not checked directly by simulated seismic tests. An anchor that has passed the simulated seismic tests, however, should function under impactive tensile loading in cracked concrete.

RB.3.4 – The provisions of Appendix B are applicable to normalweight concrete. The design of anchors in heavy weight concrete should be based on testing for the specific heavy weight concrete.

.3.5 – A limited number of tests of cast-in and post-installed anchors in high-strength concrete[B.14] indicate that the design procedures contained in this Appendix over predict strength, particularly for cast-in anchors, at $f'_c >$ 10,000 psi. Until further tests are available, an upper limit of f'_c = 10,000 psi has been~~was~~ imposed in the design of cast-in anchors. This is consistent with Chapters 11 and 12. Some post-installed anchors may have difficulty expanding in high-strength concrete. Because of this, f'_c is limited to 8000 psi in the design of post-installed anchors, unless testing is performed.

RB.3.6.1 – The design provisions of ACI 349 Appendix B for anchors in nuclear power plants retain the philosophy of previous editions of ACI 349, by encouraging anchor designs to have a ductile-failure mode. This is consistent with the strength-design philosophy of reinforced concrete in flexure. The failure mechanism of the anchor is controlled by requiring yield of the anchor prior to a brittle concrete failure. A ductile design provides greater margin than a nonductile design because it permits redistribution of load to adjacent anchors and can reduce the maximum dynamic load by energy absorption and reduction in stiffness. For such cases, the design strength is the nominal strength of the steel multiplied by a strength reduction factor of 0.90.

The specified ultimate tensile strength of the embedment should be determined based on those portions of the embedment that transmit tension or shear loads into the concrete. The ultimate shear strength of the steel is taken as 65 %percent of the ultimate tensile strength. It is not necessary to develop an embedment for full axial tension and full shear if it can be demonstrated that the embedment will be subjected to one type of loading (such as tension, shear or flexure). An embedment need not be developed for tension or shear if the load is less than 20 %percent of the full tension or shear capacity. This value of 20 %percent is consistent with the value of 20 %percent used in the equation in B.7.

An embedment may be considered subject to flexure only when the axial tension loads on the embedment are less than 20 %percent of the nominal strength in tension.

RB.3.6.2 – A ductile design can also be achieved by designing the attachment to yield before failure of the anchors. In such a case, the anchors can be nonductile so long as they are stronger than the yield strength of the attachment. This is established with a margin equivalent to that in B.3.6.1. B.3.6.2 is based on attachment yield strength, f_y, whereas B.3.6.1 uses f_{ut} because attachments are typically of A36 material and the strength is better characterized by the yield strength. The 0.75 factor allows for the actual yield versus specified minimum yield.

RB.3.6.3 –There are situations where a ductile-failure mode cannot be achieved. Previous editions of ACI 349 included specific provisions for commercially available, nonductile expansion anchors that were penalized by specifying a lower strength reduction factor. The current Appendix B includes more general provisions for anchors for which a ductile-failure mode cannot be achieved. Such situations can occur for anchors in shallow slabs, close to edges or close to other anchors. The factor of 0.60 is specified to account for the lower margins inherent in a nonductile design relative to those in a ductile design.

RB.3.8 – Ductile steel elements are defined in B.1 to have a minimum elongation of 14%percent in 2 in. This requirement is meant to ensure sufficient ductility in the embedment steel. The limit of 14%percent is based on ASTM A325[15] and A490[B.16] anchor materials that have been shown to behave in a ductile manner when used for embedment steel.

RB.3.9 – Anchors that incorporate a reduced section (such as threads, notch, or wedge) in the load path (the term load path includes tension load path and shear load path) may fail in the reduced section before sufficient inelastic deformation has occurred to allow redistribution of anchor tension and shear forces, thus exhibiting low ductility. This can be prevented by requirement (a) which ensures that yield of the unreduced section will occur before failure of the reduced section. Shear failure can be affected significantly by reduced sections within 5 diameters of the shear plane (many wedge type anchors). In this case, tests for the evaluation of the shear capacity are required. Tests reported in Reference B.11 for a limited number of attachment types, steel strength, and diameters have shown that threaded anchors will exhibit sufficient ductility to redistribute tension and shear forces.

B.3.10 – The design provisions for impulsive and impactive loads in Appendix C may be used for embedments. Energy can be absorbed by deformation of anchors designed for ductile steel failure.

RB.4 – General requirements for strength of structural anchors

RB.4.1 – This section provides the requirements for establishing the strength of anchors to concrete. The various types of steel and concrete failure modes for anchors are shown in Figs. RB.4.1.(a) and RB.4.1.(b). Comprehensive discussions of anchor failure modes are included in References B.1, B.2, and B.17. Any model that complies with the requirements of B.4.2 and B.4.3 can be used to establish the concrete related strengths. For anchors such as headed bolts, headed studs, and post-installed anchors, the concrete breakout design method of B.5.2 and B.6.2 is acceptable. The anchor strength is also dependent on the pullout strength of B.5.3, the side-face blowout strength of B.5.4, and the minimum spacing and edge distances of B.8. The design of anchors for tension recognizes that the strength of anchors is sensitive to appropriate installation; installation requirements are included in B.9.

Test procedures can also be used to determine the single anchor breakout strength in tension and in shear. The test results, however, are required to be evaluated on a basis statistically equivalent to that used to select the values for the concrete breakout method considered to satisfy provisions of B.4.2. The nominal strength cannot be taken greater than the 5 ~~%~~ percent fractile. The number of tests has to be considered in determining the 5 ~~%~~ percent fractile.

RB.4.2 and 4.3 -- B.4.2 and B.4.3 establish the performance factors for which anchor design models are required ~~to be verified. Many possible design approaches exist and the user is always permitted to design by test using B.4.2~~ as long as sufficient data are available to verify the model.

RB.4.2.1 – The addition of supplementary reinforcement in the direction of the load, confining reinforcement, or both, can greatly enhance the strength and ductility of the anchor connection. Such enhancement is practical with cast-in anchors such as those used in precast sections.

The shear strength of headed anchors located near the edge of a member can be significantly increased with appropriate supplementary reinforcement. References B.17 to B.19 provide information on designing such reinforcement. The effect of supplementary reinforcement is not included in the concrete breakout calculation method of B.5.2 and B.6.2. The engineer has to rely on other test data and design theories to include the effects of supplementary reinforcement.

For anchors exceeding the limitations of D.4.2.2, for situations where geometric restrictions limit breakout capacity, or both, reinforcement proportioned to resist the total load, oriented in the direction of load, within the breakout prism and fully anchored on both sides of the breakout planes, may be provided instead of calculating breakout capacity.

The breakout strength of an unreinforced connection can be taken as an indication of the load at which significant cracking will occur. Such cracking can represent a serviceability problem if not controlled (see RB.6.2.1).

RB.4.2.2 – The method for concrete breakout design included as considered to satisfy B.4.2 was developed from the Concrete Capacity Design (CCD) Method,[B.1,B.2] which was an adaptation of the κ Method,[B.20,B.21] and is considered to be accurate, relatively easy to apply, and capable of extension to irregular layouts. The CCD Method predicts the load-bearing capacity of an anchor or group of anchors by using a basic equation for tension or for shear for a single anchor in cracked concrete, and multiplying by factors that account for the number of anchors, edge distance, spacing, eccentricity, and absence of cracking. The limitations on anchor size and embedment depth are based on the range of test data.

The breakout strength calculations are based on a model suggested in the κ Method. It is consistent with a breakout prism angle of approximately 35 degrees [Fig. RB.4.2 (a) and (b)].

RB.4.4 – The ϕ factors for steel strength are based on using f_{ut} to determine the nominal strength of the anchor (see B.5.1 and B.6.1) rather than f_y as used in the design of reinforced concrete members. Although the ϕ factors for use with f_{ut} appear low, they result in a level of safety consistent with the use of higher ϕ factors applied to f_y. The smaller ϕ factors for shear than for tension do not reflect basic material differences but rather account for the possibility of a non-uniform distribution of shear in connections with multiple anchors. It is acceptable to have a ductile failure of a steel element in the attachment if the attachment is designed so that it will undergo ductile yielding at a load level no greater than 75 percent of the minimum design strength of an anchor (See B.3.6.2). The ϕ factor ~~is lower than for a ductile steel failure~~ for anchors governed by the more brittle concrete breakout or blowout failure is lower than for a ductile steel failure. Even though the ϕ factor for plain concrete uses a value of 0.65, the basic factor for brittle failures ($\phi = 0.75$) has been chosen based on the results of probabilistic studies.[B.3] For anchoring to concrete, the use of $\phi = 0.65$ with mean values of concrete-controlled failures produced adequate safety levels. The nominal resistance expressions, however, used in this Appendix and in the test requirements are based on the 5 ~~%~~percent fractiles. Thus, the $\phi = 0.65$ value would be overly conservative. Comparison with other design procedures and probabilistic studies[B.3] indicated that the choice of $\phi = 0.75$ was justified.

RB.4.5 – Bearing strength

RB.4.5.1 – B.4.5.1 prohibits the engineer from combining shear strength of bearing (for example, a shear lug) and shear friction (such as shear studs) mechanisms. ~~This exclusion is justified in that it is difficult to predict the distribution of shear resistance as a result of differential stiffness of the two mechanisms.~~ This exclusion is required because of the displacement incompatibility of these two independent and nonconcurrent mechanisms. Tests show that the relatively smaller displacements associated with the bearing mode preclude development of the shear-friction mode until after bearing mode failure.[B.22] As described in RB.11.1, however, the confining forces afforded by the tension anchors in combination with other concurrent external loads acting across potential shear planes can result in a significant and reliable increase in bearing mode shear capacity and can therefore be used.

RB.4.5.2 – For shear lugs, the nominal bearing strength value of 1.3 f'_c is recommended based on the tests described in Reference B.22 rather than the general provisions of 10.15. The factor of 0.70 corresponds to that used for bearing on concrete in Chapter 9.

RB.5 – Design requirements for tensile loading

RB.5.1.2 – The nominal tension strength of anchors is best represented by $A_{se}f_{ut}$ rather than $A_{se}f_y$ since typical anchor materials do not exhibit a well-defined yield point. The American Institute of Steel Construction (AISC) has based tension strength of anchors on $A_{se}f_{ut}$ since the 1986 edition of their specifications. The use of Eq. B-3 with the load factors of Section 9.2 and the ϕ factors of D.4.4 gives results consistent with the AISC Load and Resistance Factor Design Specifications.

The limitation of $1.9f_y$ on f_{ut} is to ensure that under service load conditions the anchor does not exceed f_y. The limit on f_{ut} of $1.9f_y$ was determined by converting the LRFD provisions to corresponding service level conditions. For ACI Section 9.2, the average load factor of 1.55 (from 1.4D+1.7L) divided by the highest ϕ factor (0.8 for tension) results in a limit of f_{ut}/f_y of 1.55/0.8 = 1.94. For consistent results the serviceability limitation of f_{ut} was taken as $1.9f_y$. If the ratio of f_{ut} to f_y exceeds this value, the anchoring may be subjected to service loads above f_y. Although not a concern for standard structural steel anchors (maximum value of f_{ut}/f_y is 1.6 for ASTM A307), the limitation is applicable to some stainless steels.

RB.5.2 – Concrete breakout strength of anchor in tension

RB.5.2.1 – The effects of multiple anchors, spacing of anchors, and edge distance on the nominal concrete breakout strength in tension are included by applying the modification factors A_N / A_{Nc} and ψ_2 in Eq. B-4.

Fig. RB.5.1 (a) shows A_{No} and the development of Eq. (B-5). A_{No} is the maximum projected area for a single anchor. Fig. RB.5.1 (b) shows examples of the projected areas for various single-anchor and multiple-anchor arrangements. Because A_N is the total projected area for a group of anchors, and A_{No} is the area for a single anchor, there is no need to include n, the number of anchors, in Eq. (B-4a) or (B-4b). If anchor groups are positioned in such a way that their projected areas overlap, the value of A_N is required to be reduced accordingly.

RB.5.2.2 – The basic equation for anchor capacity was derived [B.1, B.2, B.18, B.21] assuming a concrete failure prism with an angle of about 35 degrees and considering fracture mechanics concepts.

The values of k were determined from a large database of test results in uncracked concrete [B.1] as the 5 ~~%~~ percent fractile. The values were adjusted to corresponding k values for cracked concrete. [B.2, B.24] For anchors with a deep embedment depth (h_{ef} > 11 in.) some test evidence indicates using $h_{ef}^{1.5}$ can be overly conservative in some cases. Often, such tests have been performed with selected aggregates for special applications. An alternative expression (Eq. B-6b) is provided using $h_{ef}^{5/3}$ for evaluation of cast-in anchors with 11 in. < h_{ef} < 25 in. The limit of 25 in. corresponds to the upper range of test data. This expression can also be appropriate for some undercut post-installed anchors. RB.1.2, however, should be used with test results to justify such applications.

RB.5.2.3 – For anchors influenced by three or more edges where any edge distance is less than 1.5 h_{ef}, the tensile breakout strength computed by the ordinary CCD Method, which is the basis for Eq. (B-6), gives misleading results. This occurs because the ordinary definitions of A_N/A_{No} do not correctly reflect the edge effects. If the value of h_{ef} is limited to $c_{max}/1.5$, where c_{max} is the largest of the influencing edge distances that are less than or equal to the actual 1.5h_{ef}, this problem is corrected. As shown by Lutz, [B.25] this limiting value of h_{ef} is to be used in Eq. B-, B-6, B-7, and B-8. This approach is best understood when applied to an actual case. Fig. RB.5.2 (a) shows how the failure surface has the same area for any embedment depth beyond the proposed limit on h_{ef} (taken as h'_{ef} in the figure). In this example, the proposed limit on the value of $h_{ef} = c_{max}/1.5$ to be used in the computations results in $h_{ef} = h'_{ef} = 4$ in./1.5 = 2.67 in. This would be the proper value to be used for h_{ef} in computing the resistance, for this example, even if the actual embedment depth is larger.

RB.5.2.4 – Fig. RB.5.2 (b) shows dimension $e'_N = e_N$ for a group of anchors that is in tension but that has a resultant force eccentric with respect to the centroid of the anchor group. Groups of anchors can be loaded in such a way that only some of the anchors are in tension [Fig. RB.5.2(c)]. In this case, only the anchors in tension are to be considered in determining e'_N. The anchor loading has to be determined as the resultant anchor tension at an eccentricity with respect to the center of gravity of the anchors in tension. Eq. B-7 is limited to cases where $e'_N \leq s/2$ to alert the designer that all anchors may not be in tension.

RB.5.2.5 – If anchors are located close to an edge so that there is not enough space for a complete breakout prism to develop, the load-bearing capacity of the anchor is further reduced beyond that reflected in A_N/A_{No}. If the smallest side cover distance is greater than 1.5 h_{ef}, a complete prism can form and there is no reduction ($\Psi_2 = 1$). If the side cover is less than 1.5 h_{ef}, the factor, Ψ_2, is required to adjust for the edge effect. [B.1]

RB.5.2.6 – The analyses for cracking should consider all specified load combinations using unfactored loads, including the effects of restrained shrinkage.

RB.5.2.7 – Anchors that perform well in a crack that is 0.012 in. wide are considered suitable for use in cracked concrete. If wider cracks are expected, confining reinforcement to control the crack width to about 0.012 in. should be provided.

RB.5.2.9 – In the future, there are expected to be more expansion and undercut anchors that are to be calculated with the k-value for headed studs. Tests with one special undercut anchor have shown that this is possible.

RB.5.3 – Pullout strength of anchor in tension

RB.5.3.3 – The pullout strength in tension of headed studs or headed bolts can be increased by providing confining reinforcement, such as closely spaced spirals, throughout the head region. This increase can be demonstrated by tests.

RB.5.3.4 – Eq. B-10(a) corresponds to the load at which the concrete under the anchor head begins to crush.[B.17] It is not the load required to pull the anchor completely out of the concrete, so the equation contains no term relating to embedment depth. The designer should be aware that local crushing under the head will greatly reduce the stiffness of the connection and generally will be the beginning of a pullout failure.

RB.5.4 – Concrete side-face blowout strength of anchor in tension

The design requirements for side-face blowout are based on the recommendations of Reference B.26. Side-face blowout may control when the anchor is close to an edge ($c<0.4\ h_{ef}$). These requirements are applicable to headed anchors that usually are cast-in anchors. Splitting during installation rather than side-face blowout generally governs post-installed anchors. When a group of anchors is close to an edge, side face blowout will be controlled by the row of anchors closest to the edge. The anchors away from the edge will have greater strength than those closest to the edge. ~~The side-face blowout of the group is conservatively calculated using the strength of the anchors closest to the edge.~~

RB.6 – Design requirements for shear loading

RB.6.1 – Steel strength of anchor in shear

RB.6.1.2 – The nominal shear strength of anchors is best represented by $A_{se}f_{ut}$ for ~~welded~~ headed stud anchors and $0.6A_{se}f_{ut}$ for other anchors rather than a function of $A_{se}f_y$ since typical anchor materials do not exhibit a well-defined yield point. ~~The American Institute of Steel Construction (AISC) has based the nominal shear strength of welded headed studs on $A_{se}f_{ut}$ and other anchors on $0.6A_{se}f_{ut}$ since the 1986 edition of their specifications.~~ The use of Eqs. B-13 and B-14 with the load factors of Section 9.2 and the ϕ factors of B.4.4 gives results consistent with the AISC Load and Resistance Factor Design Specifications.

The limitation of $1.9f_y$ on f_{ut} is to ensure that under service load conditions the anchor does not exceed f_y. The limit on f_{ut} of $1.9f_y$ was determined by converting the LRFD provisions to corresponding service level conditions as discussed in RB.5.1.2.

RB.6.1.3 – The shear strength of a grouted base plate is based on limited testing. It is recommended that the height of the grout pad not exceed two in.

RB.6.1.4 – The friction force which develops between the base plate and concrete due to the compressive resultant from moment and/or axial load contributes to the shear strength of the connection. For as-rolled base plates installed against hardened concrete, the coefficient of friction is approximately 0.40.[B.11]

If the frictional strength is larger than the applied shear load, the base plate will not slip. When the frictional strength is less than the applied shear, the shear resistance will be a combination of both frictional strength and shear strength provided by the anchors. It must be assured that the compressive resultant used in determining the frictional resistance acts concurrent with the shear load. The presence or absence of loads should satisfy Section 9.2.3. Compressive resultants due to secondary loads should not be considered.

I 2 – Concrete breakout strength of anchor in shear

RB.6.2.1 – The shear-strength equations were developed from the CCD method. They assume a breakout cone angle of approximately 35 degrees [Fig. RB.4.2 (b)] and consider fracture mechanics theory. The effects of multiple anchors, spacing of anchors, edge distance and thickness of the concrete member on nominal concrete breakout strength in shear are included by applying the reduction factor A_V/A_{V_o} and ψ_5 in Eq. (B-16). For anchors far from the edge, B.6.2 usually will not govern. For these cases, B.6.1 and B.6.3 often govern.

Fig. RB.6.2 (a) shows A_{V_o} and the development of Eq. (B-17). A_{V_o} is the maximum projected area for a single anchor that approximates the surface area of the full breakout prism or cone for an anchor unaffected by edge distance, spacing, or depth of member. Fig. RB.6.2 (b) shows examples of the projected areas for various single-anchor and multiple-anchor arrangements. A_V approximates the full surface area of the breakout cone for the particular arrangement of anchors. Since A_V is the total projected area for a group of anchors, and A_{V_o} is the area for a single anchor, there is no need to include the number of anchors in the equation.

The assumption shown in Fig. RB.6.2 (b) with the case for two anchors perpendicular to the edge is a conservative interpretation of the distribution of the shear force on an elastic basis. If the anchors are welded to a common plate, when the anchor nearest the front edge begins to form a failure cone, shear load would be transferred to the stiffer and stronger rear anchor. For cases where nominal strength is not controlled by ductile steel elements, B.3.1 specifies that load effects be determined by elastic analysis. It has been suggested in the PCI Design Handbook approach[B.27] that the increased capacity of the anchors away from the edge be considered. Because this is a reasonable approach, assuming that the anchors are spaced far enough apart so that the shear failure surfaces do not intersect,[B.18] ~~B.6.2 allows such a procedure.~~ If the failure surfaces do not intersect, as would generally occur if ~~the anchor spacing~~, s, is equal to or greater than $1.5c_1$, then after formation of the near-edge failure surface, the higher capacity of the farther anchor would resist most of the load. ~~As shown in the bottom example in Fig.~~ RB.6.2 (b), considering the full shear capacity to be provided by this anchor with its much larger resisting failure surface is appropriate. No contribution of the anchor near the edge is then considered. Checking the near-edge anchor condition to preclude undesirable cracking at service load conditions is advisable. Further discussion of design for multiple anchors is given in Reference B.17.

For the case of anchors near a corner subjected to a shear force with components normal to each edge, a satisfactory solution is to ~~independently check~~ independently the connection for each component of the shear force. Other specialized cases, such as the shear resistance of anchor groups where all anchors do not have the same edge distance, are treated in Reference B.18.

The detailed provisions of B.6.2.1 (a) apply to the case of shear force directed towards an edge. When the shear force is directed away from the edge, the strength will usually be governed by B.6.1 or B.6.3.

The case of shear force parallel to an edge [B.6.2.1 (c)] is shown in Fig. RB.6.2 (c). A special case can arise with shear force parallel to the edge near a corner. Take the example of a single anchor near a corner [Fig. RB.6.2(d)]. If the edge distance to the side c_2 is 40 ~~%~~percent or more of the distance c_1 in the direction of the load, the shear strength parallel to that edge can be computed directly from Eq. B-16 using c_1 in the direction of the load.

RB.6.2.2 – Like the concrete breakout tensile capacity, the concrete breakout shear strength does not increase with the failure surface, which is proportional to c_1^2. Instead, the strength increases proportionally to $c_1^{1.5}$, due to the size effect. The capacity is also influenced by the anchor stiffness and the anchor diameter.[B.1,B.2,B.18,B.21]

The constant 7 in the shear strength equation was determined from test data reported in Reference B.1 as the 5 ~~%~~percent fractile adjusted for cracking.

.2.3 – For the special case of cast-in headed bolts rigidly welded to an attachment, test data [B.21, B.29] show that somewhat higher shear capacity exists, possibly due to the stiff welding connection clamping the bolt more effectively than an attachment with an anchor gap. Because of this, the basic shear value for such anchors is increased. Limits are imposed to ensure sufficient rigidity. The design of supplementary reinforcement is discussed in References B.17 to B.19.

RB.6.2.4 – For anchors influenced by three or more edges where any edge distance is less than $1.5c_1$, the shear breakout strength computed by the basic CCD Method, which is the basis for Eq. B-18, gives safe but misleading results. These special cases were studied for the κ Method [B.21] and the problem was pointed out by Lutz. [B.25] Similar to the approach used for tensile breakouts in B.5.2.3, a correct evaluation of the capacity is determined if the value of c_1 in Eqs. B-18, B-19, B-20, and B-21 is limited to h/1.5. This is shown in Figure RB.6.2(g).

RB.6.2.5 – This section provides a modification factor for an eccentric shear force towards an edge on a group of anchors. If the shear load originates above the plane of the concrete surface, the shear should first be resolved as a shear in the plane of the concrete surface, with a moment that can or cannot also cause tension in the anchors, depending on the normal force. Fig. RB.6.2 (e) defines the term e'_v for calculating the Ψ_5 modification factor that accounts for the fact that more shear is applied on one anchor than the other, tending to split the concrete near an edge. If $e'_v > s/2$, the CCD procedure is not applicable.

~~RB.6.2.6 – Fig. RB.6.2 (f) shows the dimension e_2 for the Ψ'_6 calculation.~~

RB.6.2.7 – Torque-controlled and displacement-controlled expansion anchors are permitted in cracked concrete under pure shear loads.

RB.6.3 – Concrete pryout strength

RB.6.3 – Reference B.1 indicates that the pryout shear resistance can be approximated as 1 to 2 times the anchor tensile resistance with the lower value appropriate for h_{ef} less than 2.5 in.

RB.7 – Interaction of tensile and shear forces

The shear-tension interaction expression has traditionally been expressed as:

$$\left(\frac{N}{N_n}\right)^{\alpha} + \left(\frac{V}{V_n}\right)^{\alpha} \leq 1.0$$

where α varies from 1 to 2.

The current tri-linear recommendation is a simplification of the expression where α = 5/3 (Fig. RB.7). The limits were chosen to eliminate the requirement for computation of interaction effects where very small values of the second force are present. Any other interaction expression that is verified by test data, however, can be used under B.4.3.

RB.8 – Required edge distances, spacings, and thicknesses to preclude splitting failure

The minimum spacings, edge distances, and thicknesses are very dependent on the anchor characteristics. Installation forces and torques in post-installed anchors can cause splitting of the surrounding concrete. Such splitting can also be produced in subsequent torquing during connection of attachments to anchors including cast-in anchors. The primary source of values for minimum spacings, edge distances, and thicknesses of post-installed

a[illegible]rs should be the product-specific tests. In some cases, however, specific products are not known in the design stage. Approximate values are provided for use in design.

RB.8.2 – In the absence of product-specific test information, at the design stage the minimum center-to-center spacing for post-installed anchors may be taken as $6d_o$.

RB.8.3 –The edge cover over a deep embedment close to the edge can have a significant effect on the side-face blowout strength of B.5.4. The engineer can use cover larger than the normal concrete cover requirements to increase the side-face blowout strength.

RB.8.4 – In the absence of product-specific test information, at the design stage the minimum edge distance may be taken as not less than:

Undercut anchors	$6d_o$
Torque-controlled expansion anchors	$8d_o$
Deformation-controlled expansion anchors	$10d_o$

If these values are used in design, the project drawings and project specifications should specify use of anchors with minimum center-to-center spacing and edge distance as assumed in design.

~~Headed anchors close to an edge are permitted to be torqued to 60 %percent of the design strength.~~

RB.8.4 – Drilling holes for post-installed anchors can cause microcracking. The requirement for a minimum edge distance 2 times the maximum aggregate size is to minimize the effects of such microcracking.

RB.11 – Shear capacity of embedded plates and shear lugs

RB.11.1 – Shear lugs

The code requirements for the design of shear lugs are based on testing reported in Reference B.22. This testing confirmed that shear lugs are effective with axial compression and tension loads on the embedment, and that the strength is increased due to the confinement afforded by the tension anchors in combination with external loads. The shear strength of the embedment is the sum of the bearing strength and the strength due to confinement.

The tests also revealed two distinct response modes:

1. A bearing mode characterized by shear resistance from direct bearing of shear lugs and inset faceplate edges on concrete or grout augmented by shear resistance from confinement effects associated with tension anchors and external concurrent axial loads, and

2. A shear-friction mode such as defined in 11.7 of the code.

The embedments first respond in the bearing mode and then progress into the shear-friction mode subsequent to formation of final fracture planes in the concrete in front of the shear lugs or base plate edge.

The bearing strength of single shear lugs bearing on concrete is defined in B.4.5. For multiple lugs, the shear strength should not exceed the shear strength between shear lugs as defined by a shear plane between the shear lugs as shown in Fig. RB.11-1 and a shear stress limited to $10\phi\sqrt{f'_c}$ with ϕ equal to 0.85.

anchorage shear strength due to confinement can be taken as $\phi K_c(N_s - P_a)$, with ϕ equal to 0.85, where N_s is the strength of the tension anchors in accordance with B.5.1 and P_a is the factored external axial load on the anchorage. (P_a is positive for tension and negative for compression.). This considers the effect of the tension anchors and external loads acting across the initial shear fracture planes (see Fig. RB.11-1). When P_a is negative, the provisions of Section 9.2.3 regarding use of load factors of 0.9 or zero, must also be considered. The confinement coefficient, K_c, given in Reference B.22, is as follows:

K_c = 1.6 for inset base plates without shear lugs or for anchorage with multiple shear lugs of height, h, and spacing, s, (clear distance face-to-face between shear lugs) less than or equal to $0.13h\sqrt{f'_c}$.

K_c = 1.8 for anchorage with a single shear lug located a distance, h, or greater from the front edge of the base plate or with multiple shear lugs and a shear lug spacing, s, greater than $0.13h\sqrt{f'_c}$.

These values of confinement factor, K_c, are based on the analysis of test data. The different K_c values for plates with and without shear lugs primarily reflect the difference in initial shear-fracture location with respect to the tension anchors. The tests also show that the shear strength due to confinement is directly additive to the shear strength determined by bearing or by shear stress. The tension anchor steel area required to resist applied moments can also be utilized for determining N_s, providing that the compressive reaction from the applied moment acts across the potential shear plane in front of the shear lug.

For inset base plates, the area of the base plate edge in contact with the concrete can be used as an additional shear-lug-bearing area providing displacement compatibility with shear lugs can be demonstrated. This requirement can be satisfied by designing the shear lug to remain elastic under factored design loads with a displacement (shear plus flexure) less than 0.01 in.

For cases such as in grouted installations where the bottom of the base plate is above the surface of the concrete, the shear-lug-bearing area should be limited to the contact area below the plane defined by the concrete surface. This accounts for the potential extension of the initial shear fracture plane (formed by the shear lugs) beyond the perimeter of the base plate, that could diminish the effective bearing area.

Multiple shear lugs should be proportioned by considering relative shear stiffness. When multiple shear lugs are used near an edge, the effective stress area for the concrete design shear strength should be evaluated for the embedment shear at each shear lug.

RB.11.3 – Shear strength of embedments with embedded base plates

The coefficient of 1.4 for embedments with shear lugs reflects concrete-to-concrete friction afforded by confinement of concrete between the shear lug(s) and the base plate (postbearing mode behavior). This value corresponds to the friction coefficient of 1.4 recommended in 11.7 of the code for concrete-to-concrete friction and is confirmed by tests discussed in Reference B.22.

RB.13 – Comparison of Concrete Capacity Design Method and ACI 349-97

The following sections provide comparisons of the capacities of anchors in accordance with the Concrete Capacity Design Method (included in this edition of ACI 349) against those calculated in accordance with the previous provision of ACI 349 Appendix B (ACI 349-97).

RB.13.1– Concrete breakout strength of a single headed stud in tension

Fig. RB.13-1shows the concrete breakout strength of a single anchor in tension ($\Psi_3 N_b$) in concrete with a compressive strength of 4000 psi. The CCD method in cracked concrete is from Eq. B-6a of the code with k=24

headed stud. This is increased by $\Psi_3 = 1.25$ for the strength of uncracked concrete. The ACI 349-97 strength is dependent on the head diameter and is shown for head diameters of the stud equal to 10%percent and 20%percent of the embedment depth.

Table RB.13-1 shows values from Fig. RB.13-1 for embedment depths of 4, 8, and 12 in. The table also shows the design strengths. For the CCD method, the cracked and uncracked breakout strengths are multiplied by the strength reduction factor of 0.85 for cases where the potential concrete failure surfaces are crossed by supplementary reinforcement. The factor of 0.85 is also specified in ACI 349, paragraph B.4.4.1, when determining if an anchor is ductile. For ACI 349-97, design strengths are shown for strength reduction factors of 0.65 and 0.85 based on the requirements of paragraph B.4.2. The strength reduction factor of 0.85 is only applicable in areas of compression or low tension and may be considered as uncracked. The strength reduction factor of 0.65 may be considered as applicable to cracked concrete.

The comparisons in Fig. RB.13-1 and Table RB.13-1 show a significant reduction in strength for larger embedment depths. This is due to the exponent on embedment depth and is discussed in Reference B.1. Committee 349 reviewed the test data and concluded that the exponent of 2 was unconservative. An exponent of 1.6 or 1.7 would be consistent with the test data. It was decided to use 1.5 for depths less than 11 in. and 1.67 for greater depths.

ACI 349-97 gives lower strengths for shallow embedments up to a depth of about 5 in. than the CCD method. ACI 349-97 becomes progressively less conservative than the CCD method as the embedment depth increases.

~~RB.13.2 – Concrete breakout strength of a single expansion anchor in tension~~

The concrete breakout strength of a single expansion anchor in tension in uncracked concrete is about 20%percent lower than that of a headed stud ($k\Psi_3 = 17 \times 1.4 = 24$ versus $24 \times 1.25 = 30$). In ACI 349-97, the difference was about 10%percent since the strength of headed studs included the diameter of the head. Test data show a larger reduction in strength for expansion anchors than for headed studs in cracked concrete.

The concrete breakout strength should be verified by the qualification tests for post-installed anchors. Undercut anchors generally perform better than other expansion anchors and may have the same concrete breakout strength as headed studs in both uncracked and cracked concrete.

RB.13.3 – Concrete breakout strength of an anchor group

The breakout strength calculations in the CCD method are based on a breakout prism angle of 35 degrees instead of the 45 degree cone in ACI 349-97. Fig. RB.13-2 shows the ratio of the concrete breakout strength of a group of four headed studs at equal spacing in each direction to that of a single headed stud as a function of the anchor spacing (A_n/A_{no}). For the CCD method, the strength is affected when the spacing is less than three times the embedment depth, for ACI 349-97, the strength is affected when the spacing is less than twice the embedment depth plus head radius. The CCD method reduces the strength by a maximum of about 30 %percent.

RB.13.4 – Concrete breakout strength of a single headed stud in tension close to an edge

Fig. RB.13-3 shows the ratio of the concrete breakout strength of a headed stud close to an edge to that of a single headed stud away from the edge ($\Psi_2 A_n/A_{no}$) as a function of the edge distance. This calculation uses the projected area of the 35 degree prism for the CCD method and of a 45 degree cone for ACI 349-97. The CCD method has an additional reduction factor, Ψ_2, to adjust for the edge effect. Both methods require a separate evaluation for side blow out for small edge distances. Fig. RB.13-3 also shows similar ratios for the anchor close to a corner with edge distance, C_{min}, to two edges.

RB.13.5 – Concrete breakout strength of an anchor group in tension close to an edge

ig. 13-4 shows the ratio of the concrete breakout strength of a group of four headed studs close to an edge to nat of the same anchor group away from the edge as a function of the edge distance, C_{min}. The ratio is influenced by the spacing of the anchors and this figure applies to four headed studs with embedment depth of 6 in., spacing of 6 in. and head diameter of 0.6 in. The figure also shows similar ratios for the anchor group close to a corner with edge distance, C_{min}, to two edges.

REFERENCES

B.1 Fuchs, W., Eligehausen, R., and Breen, J., "Concrete Capacity Design (CCD) Approach for Fastening to Concrete," *ACI Structural Journal*, V. 92, No. 1, January-February 1995, pp. 73–93. Discussion - *ACI Structural Journal*, V. 92, No. 6, November–December 1995, pp. 787–802.

B.2 Eligehausen, R., and Balogh, T., "Behavior of Fasteners Loaded in Tension in Cracked Reinforced Concrete," *ACI Structural Journal*, Vol. 92, No. 3, May-June 1995, pp. 365-379.

B.3 Farrow, C.B., and Klingner, R.E., "Tensile Capacity of Anchors with Partial or Overlapping Failure Surfaces: Evaluation of Existing Formulas on an LRFD Basis," *ACI Structural Journal*, V. 92, No. 6, November–December 1995, pp. 698-710.

B.4 Farrow, C. B., Frigui, I., and Klingner, R. E., "Tensile Capacity of Single Anchors in Concrete: Evaluation of Existing Formulas on an LRFD Basis," *ACI Structural Journal*, V. 93, No. 1, January-February 1996.

B.5 Shirvani, M., "Behavior of Tensile Anchors in Concrete: Statistical Analysis and Design Recommendations," (M.S. thesis, Department of Civil Engineering, The University of Texas at Austin, May 1998.)

B.6 Muratli, H., "Behavior of Shear Anchors in Concrete: Statistical Analysis and Design Recommendations," (M.S. thesis, Department of Civil Engineering, The University of Texas at Austin, May 1998.)

B.7 "Anchor Bolt Behavior and Strength during Earthquakes," NUREG/CR-5434, August, 1998

B.8 ANSI/ASME B1.1, "Unified Inch Screw Threads (UN and UNR Thread Form), ASME, Fairfield, NJ, 1989.

B.9 ANSI/ASME B18.2.1, "Square and Hex bolts and Screws, Inch Series," ASME, Fairfield, NJ, 1996.

B.10 ANSI/ASME B18.2.6, "Fasteners for Use in Structural Applications," ASME, Fairfield, NJ, 1996.

B.11 Cook, R. A., and Klingner, R. E., "Behavior of Ductile Multiple-Anchor Steel-to-Concrete Connections with Surface-Mounted Baseplates," *Anchors in Concrete: Design and Behavior (Special Publication SP-130)*, George A. Senkiw and Harry B. Lancelot III, eds., American Concrete Institute, Detroit, Michigan, February 1992, pp. 61-122.

B.12 Cook, R. A., and Klingner, R. E., "Ductile Multiple-Anchor Steel-to-Concrete Connections," *Journal of Structural Engineering*, ASCE, V. 118, No. 6, June 1992, pp. 1645-1665.

B.13 Lotze, D., and Klingner, R. E., "Behavior of Multiple-Anchor Attachments to Concrete from the Perspective of Plastic Theory," *Report PMFSEL 96-4*, Ferguson Structural Engineering Laboratory, The University of Texas at Austin, March 1997.

B.14 Primavera, E. J., Pinelli, J. P., and Kalajian, E. H., "Tensile Behavior of Cast-in-Place and Undercut Anchors in High-Strength Concrete," *ACI Structural Journal*, V. 94, No. 5, September-October 1997, pp. 583-594.

B.15 ASTM A325, "High-strength Steel Bolts for Structural Steel Joints"

B.16 ASTM A490, "Heat-treated Steel Structural Bolts, 150,000 psi Min. Tensile Strength"

B.17 *Design of Fastenings in Concrete*, Comite Euro-International du Beton (CEB), Thomas Telford Services Ltd., London, Jan. 1997.

B.18 *Fastenings to Concrete and Masonry Structures, State of the Art Report*, Comite Euro-International du Beton, (CEB), Bulletin No. 216, Thomas Telford Services Ltd., London, 1994.

B.19 Klingner, R., Mendonca, J., and Malik, J., "Effect of Reinforcing Details on the Shear Resistance of Anchor Bolts under Reversed Cyclic Loading," *Journal of the American Concrete Institute*, V. 79, No. 1, 1982, pp. 3–12.

B.20 Eligehausen, R., Fuchs, W., and Mayer, B., "Load Bearing Behavior of Anchor Fastenings in Tension," Betonwerk + Fertigteiltechnik, 12/1987, pp. 826–832, and 1/1988, pp. 29–35.

B.21 Eligehausen, R., and Fuchs, W., "Load Bearing Behavior of Anchor Fastenings under Shear, Combined Tension and Shear or Flexural Loadings," Betonwerk + Fertigteiltechnik, 2/1988, pp. 48–56.

B.22 Rotz, J. V., and Reifschneider, M., "Combined Axial and Shear Load Capacity of Embedments in Concrete," *10th International Conference, Structural Mechanics in Reactor Technology*, Anaheim, California, August, 1989.

B.23 ASTM A307, "Carbon Steel Bolts and Studs, 60,000 psi Tensile Strength"

B.24 Zhang, Y., "Dynamic Behavior of Multiple Anchor Connections in Cracked Concrete," (Ph.D. diss., The University of Texas at Austin, August 1997.)

B.25 Lutz, L., "Discussion to Concrete Capacity Design (CCD) Approach for Fastening to Concrete," *ACI Structural Journal*, November-December 1995, pp. 791–792 and authors closure, pp. 798–799.

B.26 Furche, J., and Eligehausen, R., "Lateral Blow-out Failure of Headed Studs Near a Free Edge," *Anchors in Concrete: Design and Behavior (Special Publication SP-130)*, George A. Senkiw and Harry B. Lancelot III, eds., American Concrete Institute, Detroit, Michigan, February 1992, pp. 235–252.

B.27 *PCI Design Handbook – Precast and Prestressed Concrete*, 2nd-5th Editions, Prestressed Concrete Institute, Chicago, 1978.

B.28 Wong, T.L., "Stud Groups Loaded in Shear" (M.S. thesis, Oklahoma State University, 1988.)

B.29 Shaikh, A. F., and Yi, W., "In-place Strength of Welded Studs," *PCI Journal*, V.30 (2), March–April 1985.

TABLE RB.13-1
CONCRETE BREAKOUT STRENGTH OF A SINGLE HEADED STUD
(Concrete Strength = 4000 psi)

CONCRETE BREAKOUT NOMINAL STRENGTH ($\varphi = 1.0$) (Kips)				
Embedment Depth	349 – xx		349-97	
	Cracked K = 24/16* $\psi_3 = 1.0$	Uncracked K=24/16* $\psi_3 = 1.25$	$d_u = 0.1\ h_{ef}$	
4″	12.1	15.2	14.0	
8″	34.3	42.9	56.0	
12″	63.6*	80.0*	125.9	
CONCRETE BREAKOUT DESIGN STRENGTH (Kips)				
Embedment Depth	349 – xx		349-97	
	$\phi = 0.85$	$\phi = 0.85$	$\phi = 0.65$	$\phi = 0.85$
4″	10.3	12.9	9.1	11.9
8″	29.2	36.5	36.4	47.6
12″	54.1*	67.6*	81.8	107.0

* The strength for embedment depths of 4″ and 8″ is calculated using equation B-7a; the strength for the embedment depth of 12″ is calculated using equation B-7b.

METRIC VERSION

.0 Change units as follows: in. shall be mm; in.^{2} shall be mm^2; psi shall be MPa; lb shall be N.

B.1 Change 2 in. to 50 mm.

B.3.5 Change 10,000 psi to 70 MPa and change 8000 psi to 55 MPa.

B.4.2.2 Change 2 in. to 50 mm and change 25 in. to 625 mm.

B.5.1.2 Change 125,000 psi to 860 MPa.

B.5.2.2 Change k = 24 to k = 10, change k = 17 to k = 7, change k = 16 to k = 6.7, change 11 in. to 280 mm, and change 25 in. to 635 mm.

B.5.4.1 In Equation B-11, change 160 to 13.3.

B.6.1.2 Change 125,000 psi to 860 MPa.

B.6.2.2 In Equation B-18a, change 7 to 0.6.

B.6.2.3 Change 3/8 in. to 10 mm.

B.6.2.3 In Equation B-18b, change 8 to 0.66.

B.6.2.7 Change #4 to #13 and 4 in. to 100 mm.

B.6.3.1 Change 2.5 in. to 65 mm.

B.8.5 Change 4 in. to 100 mm.

RB.5.2.2 Change 11 in. to 280 mm, change 25 in. to 635 mm.

RB.5.2.3 Change 4 in. to 100 mm; change 2.67 in. to 67 mm.

RB.5.2.7 Change 0.012 in. to 0.3 mm.

RB.6.2.2 Change "constant 7" to "constant 0.6."

RB.6.3 Change 2.5 in. to 65 mm.

Fig. RB.5.2(a) Change 4 in. to 100 mm; change 8 in. to 200 mm; change 2.67 in. to 67 mm.