LFS ORIGINAL

SSINS No.: 6835
IN 86-100

UNITED STATES
NUCLEAR REGULATORY COMMISSION
OFFICE OF INSPECTION AND ENFORCEMENT
WASHINGTON, DC 20555

December 12, 1986

IE INFORMATION NOTICE NO. 86-100: LOSS OF OFFSITE POWER TO VITAL BUSES AT SALEM 2

Addressees:

All holders of an operating license or a construction permit for pressurized-water reactors (PWRs) or boiling-water reactors (BWRs).

Purpose:

This notice is intended to alert licensees of an event that occurred at Unit 2 of the Salem Nuclear Generating Station after loads had been added to vital and nonvital buses without performing adequate dynamic analyses. The event resulted in actuation of relays that provide undervoltage protection for equipment and detect loss of power to vital AC power buses, multiple transfers of vital buses from one station power transformer (SPT) to another, operation of reactor coolant pumps without cooling of their thermal barriers and motor bearings, reliance on natural convection to cool the reactor core, and repeated opening of a pressurizer relief valve.

It is expected that recipients review this notice for applicability to their reactor facilities and consider actions, if appropriate, to preclude occurrence of similar problems at their facilities. Suggestions contained in this notice do not constitute NRC requirements; therefore, no specific action or written response is required.

Description of Circumstances:

On August 26, while Unit 2 was operating at 100% of full power, an instrument technician inadvertently grounded Instrument Vital Bus C causing a voltage spike on the bus. The voltage spike generated spurious signals which indicated that pressure was low in two steam generators and that the circuit breaker for a reactor coolant pump was open. In response to the spurious circuit breaker signal, the reactor protection system tripped the reactor. The control system then tripped the turbine and dumped steam to the condenser and the atmosphere. Spurious low steam generator pressure signals in conjunction with actual high steam flow signals caused a safety injection signal and safety injection. In response to the safety injection signal, Diesel Generators A and C started. Diesel Generator B was out of service for maintenance.

8612090400

Because of the turbine trip, the nonvital buses transferred automatically from the auxiliary power transformer to the station power transformers (SPTs) causing a transient decrease in voltage at the SPTs. In a 15-second time span, Vital Bus A transferred from SPT 22 to SPT 21 and back again. Vital Bus B transferred from SPT 21 to SPT 22, and Vital Bus C transferred from SPT 22 to SPT 21. At the end of that time span, two of the vital buses satisfied the "blackout" logic, and a station "blackout" signal was generated although offsite power to the station was normal. The station "blackout" logic generates a "blackout" signal if 2 of 3 vital 4160 VAC buses are below 91% of rated voltage for more than 13 seconds. The station "blackout" signal automatically disconnected the vital buses from the SPTs, shed vital bus loads, connected the vital buses to the diesel generators, and then sequenced safety-related loads onto the vital buses.

The reactor coolant pumps ran throughout the undervoltage transient. By design, power to the component cooling water pumps, which are on the vital buses, was not restored automatically because the reactor coolant pumps would not be operating during a valid station blackout. With the component cooling water pumps stopped, the thermal barriers and motor bearings for the reactor coolant pumps were not being cooled. In accordance with procedures and training, the operators secured the reactor coolant pumps within 5 minutes to avoid damage to the pumps and established natural circulation through the reactor core. After the reactor coolant pumps were stopped, a power-operated relief valve on the pressurizer opened and closed repeatedly to relieve pressure in the reactor coolant system. The pressurizer safety valves were not challenged. In accordance with emergency procedures, the safety injection signal was reset after its cause was determined component cooling water pumps were restarted, safety injection was terminated, and Vital Bus B was reconnected to the SPT.

Within an hour of trip, two reactor coolant pumps were operating and normal control of pressure in the reactor coolant system had been established. Within the next hour, the other vital buses were reconnected to the SPTs, and the diesel generators were secured. Four hours after trip, the unit was stable and in hot standby.

Discussion:

The Salem plant has two reactor units. Each unit (see Figure 1) has four 4.16 kV nonvital (group) buses that supply power to those components that are required for normal operation of the power plant and are not required during recovery from an accident. Loads on these buses include the reactor coolant pumps. The nonvital buses can be supplied with power from either (a) the reactor via the turbine generator and the auxiliary power transformer or (b) offsite via a pair of 13.8-4.16 kV SPTs. Two nonvital buses are normally supplied by each SPT. Nonvital buses for the other reactor unit are supplied by another pair of SPTs. The usual plant practice was to supply power to the nonvital buses from the auxiliary power transformer. Therefore, turbine trips caused the nonvital buses to transfer automatically from the auxiliary power transformer to the SPTs. Block loading the SPTs in this alignment caused temporary degradation of voltage.

Each unit has three 4.16 kV vital buses that supply power to safety-related loads. Each vital bus is supplied by one of the SPTs. If voltage for a vital bus drops below 91% for 10.5 seconds, an undervoltage transfer signal is generated. The bus automatically disconnects from the SPT that is supplying power to it and connects to the other SPT. If voltage for two of the three vital buses drops below 91% for 13 seconds, then a station "blackout" signal is generated for the unit, the vital buses are automatically disconnected from the SPTs, loads are shed from the vital buses, the diesel generators are started, and loads are sequenced onto the diesel generators via the vital buses. The undervoltage transfer and station blackout signals are provided by sets of relays with time delays. If voltage drops below 70%, other undervoltage relays instantaneously initiate a station blackout signal.

Before the event and after the last dynamic analysis of SPT loads, the licensee added 8200 and 2200 kVA to SPTs 21 and 22, which normally supply Unit 2, and 3200 and 2200 kVA to SPTs 11 and 12, which normally supply Unit 1. Each of these changes includes 800 kVA added to vital buses, with the remaining loads added to the nonvital buses. The additional loads on the nonvital buses include condensate, heater drain, and circulating water pumps, which were installed to improve the performance of the plant. Further, to facilitate repairs to the Unit 1 auxiliary power transformer, a Unit 1 condensate pump was temporarily connected to a Unit 2 nonvital bus that transfers to SPT 21 on turbine trip. The static effects of these loads on the performance of the buses had been determined, but the dynamic effects had not. When the turbine for Unit 2 tripped, the heavily loaded nonvital buses were transferred without sequencing from the auxiliary power transformer to the SPTs. The SPTs were unable to maintain rated voltage and a voltage transient resulted.

The last dynamic analysis of SPT loads was performed in 1980. Before restart of Unit 2 after the recent event, the licensee reduced the loads on the SPTs consistent with that analysis, revised operating procedures based on this reduction in available equipment, and decided not to supply power to the nonvital buses from the auxiliary power transformer. Similar changes were made for Unit 1. Further, Unit 1 was derated to 85% of full power and Unit 2 to 80%. To determine the cause of the multiple vital bus transfers from SPT to SPT and to provide a basis for corrective action, the licensee has initiated a comprehensive design review of the electrical distribution system for the plant, including review of transients and analysis of the vital bus undervoltage transfer and station blackout relaying schemes.

Three concerns result from this event:

(1) adding loads to vital and nonvital buses without performing a dynamic analysis of their effect on the buses and power supplies

(2) hunting by nonvital buses for a source of adequate power during an undervoltage condition

(3) the consequences of generating a blackout signal when in fact there is no blackout, e.g., operation of the reactor coolant pumps without component cooling water

This notice requires no specific action or written response. If you have any questions regarding this matter, please contact the Regional Administrator of the appropriate regional office or this office.

Edward L. Jordan, Director
Division of Emergency Preparedness
and Engineering Response
Office of Inspection and Enforcement

Technical Contacts: Lee H. Bettenhausen, RI
(215) 337-5291

Roger W. Woodruff, IE
(301) 492-7205

Attachments:
1. Salem Electrical Distribution
2. List of Recently Issued IE Information Notices

SALEM PLANT

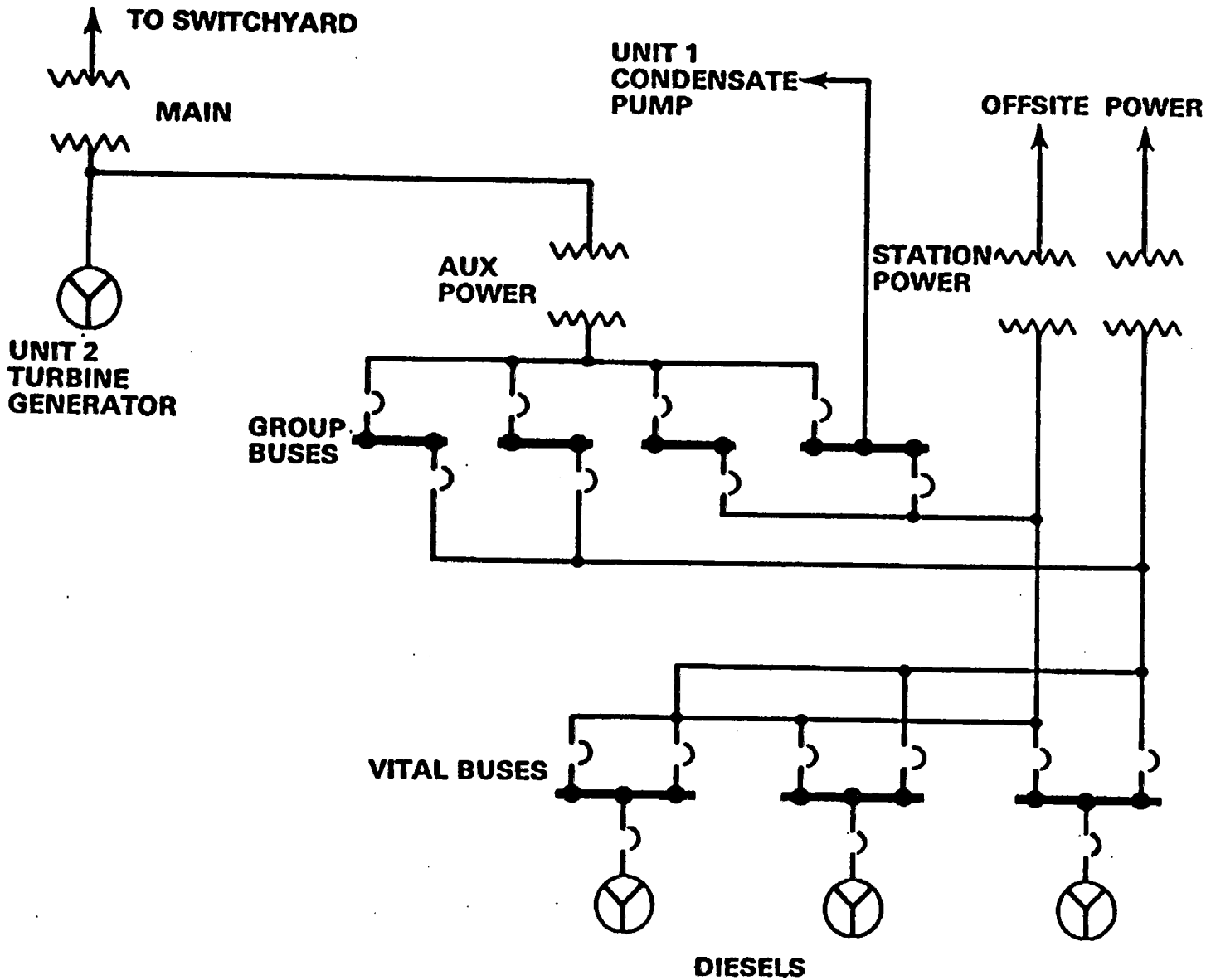

Attachment 1
IN 86-100
December 12, 1986

LIST OF RECENTLY ISSUED
IE INFORMATION NOTICES

Information Notice No.	Subject	Date of Issue	Issued to
86-99	Degradation Of Steel Containments	12/8/86	All power reactor facilities holding an OL or CP
86-21 Sup. 1	Recognition Of American Society Of Mechanical Engineers Accreditation Program For N Stamp Holders	12/4/86	All power reactor facilities holding an OL or CP
86-98	Offsite Medical Services	12/2/86	All power reactor facilities holding an OL or CP
86-97	Emergency Communications System	11/28/86	All power reactor facilities holding an OL or CP and fuel facilities
86-96	Heat Exchanger Fouling Can Cause Inadequate Operability Of Service Water Systems	11/20/86	All power reactor facilities holding an OL or CP
86-95	Leak Testing Iodine-125 Sealed Sources In Lixi, Inc. Imaging Devices and Bone Mineral Analyzers	11/14/86	All NRC licensees authorized to use Lixi, Inc. imaging devices
86-94	Hilti Contrete Expansion Anchor Bolts	11/6/86	All power reactor facilities holding an OL or CP
86-93	IEB 85-03 Evaluation Of Motor-Operators Identifies Improper Torque Switch Settings	11/3/86	All power reactor facilities holding an OL or CP
86-82 Rev. 1	Failures Of Scram Discharge Volume Vent And Drain Valves	11/4/86	All power reactor facilities holding an OL or CP
86-92	Pressurizer Safety Valve Reliability	11/4/86	All PWR facilities holding an OL or CP

OL = Operating License
CP = Construction Permit