6.0 VALUE-IMPACT ANALYSIS FOR "CONDENSER IN-SERVICE INSPECTION PROGRAM" REQUIREMENT

6.1 SUMMARY

This section states the proposed requirement and the bases for its selection and summarizes the results of the value-impact analysis.

6.1.1 Description

This analysis addresses the requirement proposed by NRC(1) for a license condition to be added to include a commitment to perform condenser inservice inspection if the secondary water chemistry conditions and limits used to establish power reduction requirements are exceeded to the extent that a power reduction is required twice per quarter as a consequence of condenser leakage. The condenser inservice inspection program shall be included in the plant operating procedures.

6.1.2 Need for Action

Condenser operating experience was summarized in EPRI-NP-481, "Steam Plant Surface Condenser Leakage Study," by the Bechtel Corporation. The Bechtel survey (2) assessed the leakage integrity of the condenser and the reliability and operability of the downstream components to the contamination introduced from the recirculation water. Air and water in-leakage through the failed condenser tubing can contaminate the condensate, feedwater, steam generator water, and steam, which, in turn, degrades the structural integrity of the steam generator tubes, turbine and other components in the cooling system.

The tolerance to a given leak in a given plant is a function of the impurity content of the recirculation water, the presence or absence of condensate demineralizers, the materials in the condenser and feedwater trains, and the specification requirements for the reactor coolant cycle water. Many undesirable contaminants enter the secondary system through condenser leaks and condenser integrity is essential to maintaining good water chemistry.

It is intended that the new limits for secondary water chemistry will provide the incentive to maintain proper condenser integrity. The condenser inspections under this requirement are a backup measure to assure condenser integrity only if there are repeated indications that satisfactory water chemistry cannot be maintained.

6.1.3 Summary of Values and Impacts

Administration of the condenser ISI program could be performed within the estimated personnel addition for the SWCP. The primary value of this requirement is the back-up assurance of providing compliance with SWC limits. The condenser inspection equipment costs are approximately $25,000 for leak detection (helium), with each inspection cost between $5,000 and $25,000, depending on test extent and type. Repair and inspection radiation doses are estimated at 6-30 man-rem annually.

It is concluded that this CISIP requirement should either be included within the SWCP requirement or dropped completely. This conclusion arises from the belief that no effective SWCP is possible without CISI and, thus, the CISIP should be explicitly or implicitly included in the SWCP.

6.2 APPROACH

6.2.1 Objective

The objective of this evaluation is to determine the values and impacts related to implementation of an NRC requirement for incorporation of a requirement for a condenser in-service inspection program (CISIP) as a license condition for PWR owners. The results of the analysis are to provide sufficient qualitative and quantitative information to assess the overall merit of the CISIP requirement.

6.2.2 Scope

The listing below provides the impacts and values to be addressed relative to a CISIP and thus provide the basis for assessing the cost factors, change in STGR probability, and dose factors. This program is

heavily related to the implementation of a secondary water chemistry program (SWCP) which is perceived by NRC to be of major importance. The approach used to develop qualitative and quantitative values for these factors was a telephone survey to a number of PWR owners. This survey was performed concurrently with the SWCP survey. The items investigated included the following:

- purchased replacement power
- replacement/maintenance of equipment
- occupational exposure from inspection
- operating labor for inspection, data analysis, reporting, and audits
- improved availability/reliability and operability of downstream component
  - o Increased SG life
  - o Improved SWCP
  - o Reduced risk of SGTR

6.3 RESULTS OF ANALYSIS

Table 6-1 presents a summary of the information received from the telephone survey of the PWR owners. These data were utilized in formulating the preliminary results.

6.3.1 Industry

A CISIP can effect the lowering of SG degradation rates by ensuring condenser tube integrity, but only <u>after</u> SWC limits were exceeded, as this CISIP requirement is written. If SWC conditions and limits could not be maintained, unit power reductions and their attendant high replacement fuel costs ($5,000 per day per percentage point reduction) would force the unit's operator into corrective action. Thus, with a SWCP and a condenser-related problem, attention is focused on condenser repair from the onset, with or without a CISIP.

Table 6-1
Summary of Pertinent Information Received During Survey of PWR Owners

1. Nearly all of the people surveyed indicated that a good CISIP is the major contribution to avoiding a condenser tube rupture.

2. A number of the units perform CISIP during downtimes.

3. Some units would not provide specifics on their CISIP. The units responding provided the following concerning their CISIP:

   - 1 unit - Eddy Current Testing (ECT) and Helium Leak Checking

   - 2 units - Extremely detailed CISIP - 100 percent ECT and air in-leakage plus Helium leak checks frequently.

   - 1 unit - ECT and air in-leakage checking

4. It is estimated that there would be no labor impact due to this requirement; the administration of this program could be handled by the same staff additions made for the secondary water chemistry program administration.

Impacts

The average impact on the industry according to the survey results presented in Table 6-I appear to be minimal. Assuming the administration of the CISIP could be performed by the same staff and within the allotted time for the secondary water chemistry program, then the only impact would be related to the frequency and extent of testing. It appears that if there was a requirement for 100 percent ECT at all units, this would require an increase in test service costs. Similarly, the air inleakage and helium leak checking could cost substantially more if more frequent and extensive testing became a requirement.

The costs associated with helium leak detection include (3) $25,000 for the equipment and an annualized nominal labor and material cost of $5,000 per inspection. The estimated annual exposure is 12 mman-rem for present methods of leak detection and repair, and heliumm testing can reduce this exposure by 6 man-rem (3). Present ECT and air in-leaking costs range from $10-25,000 per inspection, depending on the number of tubes tested.

These impacts are unit-specific. Some units will probably experience no impact while other may experience significant cost impacts. From the survey results, approximately 30% of operating plants would need to implement CISI programs.

Values

Historically, condenser tube integrity has accounted directly or indirectly (denting) for approximately 90% of the SWC problems which affect SG tube degradation. The CISIP will help prevent power reductions and outages due to exceeding SWC conditions and limits on a recurring basis. However, the values and benefits assigned to a CISIP are included in those attributed to the SWCP requirement.

The SWCP is considered the "main" requirement because the maintaining of the proper SWC is what prevents SG degradation, and the penalties for not maintaining proper SWC are deemed severe enough to ensure correction of any problem, including condenser integrity. Thus, the CISIP

is considered a necessary part of an effective SWCP and should be included within the SWCP requirement.

6.3.2 Public Risk

The public risk reduction is included within that of the SWCP for the reasons outlined above.

6.3.3 Implementation Plan

Implementation of the CISIP requirment should occur in parallel with the SWCP. The impact of implementing the CISIP should be minimal. ECT, helium leak testing, and air-inleakage testing are services and equipment which are available.

6.3.4 Alternatives

One alternative to a separate CISIP requirement is to include CISI within the SWCP requirement. It seems justifiable that no SWCP can be truly effective without a CISIP. Thus, the SWCP could simply be written to require/include a CISIP.

A second alternative would be to drop the CISIP requirement completely. The industry would still have to deal with condenser inspection and maintenance simply due to the progressively more stringent corrective actions required for out of spec water chemistry conditions under the SWCP requirement.

6.4 REFERENCES

1. T. Ippolito (NRC) to G. C. Lainas, Memorandum, "Forthcoming Meeting with Steam Generators Owners Group - Proposed Steam Generator Generic Requirements", July 22, 1982.

2. Bechtel Corporation, "Steam Plant Surface Condenser Leakage Study," EPRI-NP-481.

3. Atomic Industrial Forum, "An Assessment of Engineering Techniques for Reducing Occupational Radiation Exposure at Operating Nuclear Power Plants", February 1980.

7.0 VALUE-IMPACT ANALYSIS FOR " A STUDY OF ALTERNATIVE METHODS OF STABILIZATION AND MONITORING OF DEGRADED TUBES IN STEAM GENERATORS" REQUIREMENTS

7.1 SUMMARY

This section describes the proposed requirement and the bases for its selection and summarizes the results of the value-impact analysis.

7.1.1 Description

This analysis addresses the requirement proposed by the NRC to develop criteria and procedures for stabilizing and monitoring degraded tubes in steam generators. These recommendations were presented to the Steam Generator Owners Group by the NRC (1) on July 29, 1982. The recommendations for this task are summarized below.

Pressurized water reactor (PWR) licensees shall be required to develop criteria and procedures for plugging steam generator tubes which contain provisions for: (a) the stabilization of degraded tubes that may be subjected to progressive degradation mechanisms having the potential to cause severance of the tube and consequently to damage adjacent tubes; and (b) the monitoring of further degradation of plugged non-leaking tubes for which the rate of further degradation cannot be reliably predicted.

Additionally each licensee shall be required to submit a report containing an identification of all progressive degradation mechanisms presently occuring or likely to occur in his plant. The criteria in the report shall enable a determination of the licensee's bases for providing for or not providing for a stabilization system or a monitoring system for tubes plugged in the past as well as for tubes which shall be plugged in the future.

The above two proposed requirements will involve analysis of the history of all types of tube degradation mechanisms which have occurred in each plant, and an assessment of which types are progressive.

7.1.2 Need for Action

The need for these recommendations is based on the fact that a plugged tube may continue to degrade further and, if the degradation mechanism is a type that could cause the tube to completely sever, it could then damage adjacent tubes. The most important types of degradation for this type of failure are those which affect the entire circumference of the tube. Circumferential cracks and fretting wear due to vibration are two examples of mechanically induced means for severing the tubes. Corrosion which attacks the entire circumference of the tube, or the potential for propagating a corrosion defect by fatigue, either as a result of flow-induced vibration or cyclic loadings due to differential thermal expansion between plugged and unplugged tubes are examples of corrosion-induced mechanisms for severing tubes. Tube stabilization would effectively prevent a severed tube from damaging adjacent tubes, and in some cases could prevent the stabilized tube from becoming severed in the first place.

The need for a study of monitoring techniques, beyond the current conventional inservice inspection practices for the purpose of monitoring the integrity of tubes plugged on the hot leg side of the steam generator, is demonstrated by newly encountered degradation mechanisms for which knowledge of the tube failure rate is limited or unpredictable. Monitoring the plugged tube's integrity would provide an early warning of further degradation prior to severance.

There is a second subset of tubes that could conceivably provide information about rupture rates if they were to have a leak monitoring device installed. An example is the model D steam generators used by the Westinghouse plants at the Swedish Ringals 3, the Spanish Alamaraz 1 and McKGuire 1 have posed some problems with tube fretting which is not well understood.(8,9). Some type of tube leak monitoring device might help improve the level of understanding for this problem, so that the vendor could suggest a solution to the problem. Another example of tubes that might fall in this subset are those which have been subjected to mechanical damage such as the one which failed at Ginna (10,11).

7.1.3 Summary of Values and Impact

The values and impacts to industry and to the public of carrying out these studies are limited. There will be no change in risk to the public or in occupational radiation exposure to industry personnel unless the criteria and procedures developed cause a new program to be implemented. The impact on each PWR licensee would be the cost associated with 3/4 to 1-1/2 man-year's effort to perform the study and prepare the required report for the NRC. The value of the study would be realized if criteria and procedures were developed by the individual plants which required implementation. At that stage of the process, a definitive assessment could be made to determine the costs of implementing the alternative tube plugging and monitoring techniques compared with the benefits of avoided costs of a forced outage. At this point is is necessary to assume a probability of generating a new program as a result of the criteria and procedures and make a rough estimate of the values and impact that ensue.

7.2 APPROACH

7.2.1 Objective

The objective of this task is to perform a value-impact analysis associated with the recommendation that licensees develop criteria and procedures for tube stabilization and monitoring, and submit an assessment of prior and anticipated tube degradation mechanisms.

7.2.2 Scope

The scope of this task is limited to an assessment of values and impacts associated with the development of criteria and proceedures for tube plugging which contain provisions for stabilizing and monitoring degraded tubes and for preparing a report which identifies in-plant progressive degradation mechanisms: Consequently, only the cost associated with these studies can be reasonably predicted and these are detailed herein. However, in addition, estimates are provided of the impacts and benefits of program implementation.

7.3 RESULTS OF ANALYSIS

7.3.1 Industry: Values and Impacts

In order to meet the NRC requirements of these recommendations, each plant will need to review its plant operating records, paying specific attention to the steam generator performance. In all cases, metallurgists with specific experience on SGT degredation mechanisms will be required to review the history on the steam generator tubes, including reasons for past plugging or stabilizing. Representatives of the manufacturers of the steam generators will have to be consulted, since their cumulative experience is greater than any single licensee. This greater experience with SGT problems would be of value in helping to prepare the criteria. Consultation with service engineers and operation and maintenence engineers for each plant will be necessary to develop an understanding of procedures for alternative tube plugging mechanisms. The above data gathering phase involves approximately 5-10 man months depending on the level of problems associated with the specific plant. Those plants with no history of steam generator tube plugging will probably require the minimum effort suggested above. Plants with extensive damage and repair history may need the ten months.

After the data has been collected and analyzed, the criteria and procedures can be formulated with a 2-4 man-months effort. Each plant necessarily has to work with the steam generator vendors and possibly with manufacturers of inservice inspection equipment for the development of procedures. Depending on the potential number of tubes affected by the study, different procedures may be established. For instance, if only a small number of tubes are involved, manual procedures may be satisfactory in terms of impact and ORE. On the other hand, for plants with a potentially large number of affected tubes, semi-automated procedures, may be required in order to minimize costs and maintain ALARA goals. (2,3,4,5,6) During this phase of the study, various concepts for providing for monitoring and stabilization may be considered. For example, the Sentinel plug, which Westinghouse engineers have developed to monitor when a tube first experiences a through-wall penetration, may be just one of several methods which result from the studies to be undertaken by each plant. Similarly, the solid rod used to stabilize plugged tubes may also be only one of several mechanical elements proposed by the study participants.

The last phase of recommendations involves developing a criteria in a report which shall enable NRC to determine the licensee's bases for providing or not providing monitoring or stabilizing capability for degraded, plugged tubes. This phase should require approximately 2-4 man-months of effort.

The total impact to each plant will be on the order of 3/4 to 1 1/2 man-years of effort to produce the required criteria, procedures and report for the NRC.

The value to industry for doing the study must be measured in terms of an increased understanding of degradation mechanisms and the actual magnitude of the problem in each plant. If the study were to result, at some later date, in implementation of a specific tube monitoring or tube stabilization procedures, then a reasonably accurate assessment of the value in terms of reduced risk of steam generator tube failure or of avoided costs due to a forced outage could be made.

7.3.2 Estimate of Implementation Values and Impacts

Twenty-three Westinghouse, Babcock & Wilcox, and Combustion Engineering, units will require tube stabilization and 19 W, B&W and C-E units will require tube monitoring. These estimates are based on a history of tube plugging due to a subset of the degradation mechanisms which could continue to cause degradation after plugging. The mechanisms considered are: cracking, fretting, fatigue, wear on anti-vibration-bar, mechanical damage, corrosion and "unknown".

The cost of implementing the plan has been estimated by considering the average cost per unit for those units which would be affected by the stabilization and the monitoring sections of the plan. The total avoided cost or value to industry is estimated by the product of (1) the avoided frequency rate for SGTR events/reactor year; (2) the number of units affected; (3) and the cost of one 30 day outage per year for 25 years to repair failed SG tubes. The cost for the 25 year present worth of 30 day outages $311,000,000, is based on Ginna data. The reduction in failure rate for Westinghouse, Babcock & Wilcox and Combustion-Engineering Plants was

found to be 0.0066, 0.0189, and 0.0006 respectively. The values and impacts presented in Table 7-1 consider a single retrofit operation and a recurring installation operation for 25 years of additional plant life. The dollar values are discounted to present worth.

The occupational exposures associated with implementing the tube stabilization and tube monitoring devices have been estimated to be between 806 and 1023 man-rem per unit. These figures represent exposures utilizing a semi-automatic procedure for both retrofit and recurring installation for the next 25 years of unit operation. The range expressed above is due to the range of time necessary to install tube stabilizers and monitors as estimated by representatives of each vendor. (2,3,4)

Table 7-1. Present Worth Cost per PWR Unit of Implementation of Alternative Tube Plugging Criteria.*

Vendor	Westinghouse (10^6)	Babcock & Wilcox (10^6)	Combustion-Engineering (10^6)
Value			
Avoided Costs Due to Forced Outage**	31	47	0
Impacts			
Costs to Implement Stabilizers	24	1	0
Number of Units Affected	15	8	0
Cost to Implement Monitors	9	1	1
Number of Units Affected	10	5	1
Net Value	-2	45	-1

* Considers a Single Retrofit Cost Plus Recurring Costs for 24 Additional Years of Plant Life Discounted to Present Worth.

** Avoided costs due to forced outage apply only to the stabilizer part of the plan.

7.3.3 Alternatives

Study with Implementation

An alternative to the proposed recommendation would be a study directed toward implementation of its results. Because the study alone does not require any action on the part of any licensee, there will be no value in terms of reduced risk of a steam generator tube rupture and possible forced outage unless a program implementation is mandated. An examination of the steam generator tube data (7) has revealed that in all probability, there is a subset of tubes that would benefit (i.e. not sever) if they were to have a stabilization device installed. If the study part of the combined alternative were to substantiate this, then the second part, i.e., the implementation phase would actually result in reduced probability of a rupture event. However, it must be recognized that the study could fail, i.e., be unable to suggest improvement in existing programs.

Study by One Organization

One alternative would be for an independent organization to do the study for all plants. Efficiency and objectivity should be enhanced, cross comparison of different plant data would be helpful; use of "experts" would be more efficient; and production of an industry wide standard would be easier.

REFERENCES

1. Memorandum for Gus Lainas from Thomas Ippolito, Subject, "Meeting with Steam Generator Owners Group - Proposed Steam Generator Generic Requirement," July 29, 1982.

2. Telephone conference with Mr. Robert Li: Nuclear Plant Support Group, Florida Power and Light, 6 August, 1982.

3. Telephone conference with Mr. James Snee, Nuclear Service Division, Westinghouse, 27 July 1982.

4. Telephone conference with Mr. James Shetler, Steam Generator Services, Babcock and Wilcox, 5 August, 1982

5. Telephone Conference with Mr. Julian Daniel, Steam Generator Field Service, Combustion Engineering, 6 August, 1982.

6. Consultation with Howard Houserman, eddy-current test engineer at Zeetec, Inc. 6 August, 1982.

7. NUREG-0886, "Steam Generator Tube Experiences" C.Y. Cheng.

8. Memorandum from Office of International Programs, Subject, "Preheater Type Steam Generator Tube Problems in Foreign Reactors, April 5, 1982.

9. Letter From Robert Tedesco, NRC to William Parker, Duke Power Co., Subject: W Model D SG at McGuire Nuclear Station, Jan 19, 1982.

10. NUREG-0916, "Safety Evaluation Report Related to the Restart of R.e. Ginna Nuclear Power Plant," Rochester Gas and Electric Corporation, pp. 5-57 - 60, May 1982.

11. NUREG-0909, "NRC Report on the January 25, 1982 Steam Generator Tube Rupture at R.E. Ginna Nuclear Power Plant," April, 1982.

8.0 VALUE-IMPACT ANALYSIS FOR "PRIMARY TO SECONDARY LEAKAGE RATE LIMITS" REQUIREMENT

8.1 SUMMARY

This section presents the proposed requirement and the bases for its selection and summarizes the results of the value-impact analysis.

8.1.1 Description

This analysis addresses the requirement proposed by NRC (1) that each licensee shall revise his technical specifications for primary to secondary leakage rate limits to be consistent with the latest revision of the applicable Standard Technical Specifications (STS). Section 3.4.7.2 of the STS specifies a limit of 1 gpm primary to secondary leakage through all steam generators not isolated from the reactor coolant system. If primary-to-secondary leakage rates exceed one of the specified limits, the leakage rate must be controlled within four hours or the reactor must be brought to hot standby within six hours and to cold shutdown within the following 30 hours. Also, when the technical specification leakage rate limit is exceeded, Regulatory Guide 1.82 and the STS require an unscheduled steam generator inservice inspection (ISI).

Specifications regarding the sampling and analytical program necessary to measure primary to secondary leakage are not covered in the STS surveillance requirements. Rather, it would be the responsibility of each plant operator to demonstrate and implement the capability for adequate surveillance.

8.1.2 Need for Action

These STS limits are based on two considerations. First, 1 gpm limit for all steam generators helps ensure that the dosage contribution from tube leakage will be limited to a small fraction of 10 CFR Part 100 limits in the event of either a steam generator tube rupture (SGTR) or steam line break. This limit is consistent with the assumptions used in the analysis of these accidents. Second, the 500 gpd (0.34 gpm) leakage limit

per steam generator enhances assurance that steam generator tube integrity is maintained in the event of a main steam line break (MSLB). In a practical sense the leakage rate limits provide a very important indication of the existence or rate of steam generator tube degradation. Experience has shown that some forms of degradation can develop in a period of time shorter than the routine inspection intervals or may be difficult to detect with current eddy current techniques. In the event that such degradation occurs, the leakage rate limits act to indicate when plant shutdown, ISI, and corrective actions should be taken. From a practical standpoint, this is perhaps the most important function of the leakage rate limits.

Not all plants are presently required to comply with the STS. In particular, several older units have not yet adopted the STS, and these plants may have leakage rate limits higher than those specified by the STS. The proposed action would make leakage rate limits consistent with the STS for all plants. Consistency with the STS helps ensure that the dosage contribution from the tube leakage will be limited to a small fraction of 10 CFR 100 limits in the event of either a tube rupture* or a steam line break, and that steam generator tube integrity is maintained in the event of an MSLB or under LOCA conditions.+ In some instances, however, unique circumstances may justify the imposition of either lower or additional restrictive limits to provide the same level of assurance.

8.1.3 Values and Impacts

The major value of the proposed action is that it enhances assurances of a the margin of safety which constitutes the basis for the

---

*A tube rupture will likely cause activation of the steam generator relief valves and vent secondary water and steam to the environment. The radioisotope inventory of the secondary is kept lower with lower leak rate limits. However, the effect is not too significant considering that the secondary side venting of radiocontaminants is overwhelmed by the event of a steam tube rupture, no matter what the primary to secondary leakage limits are.

+Since a LOCA decreases the differential pressure across a steam tube during a LOCA, this effect has to be minor.

STS by requiring all plants to comply with the most recent revision of those specifications. This safety value associated with compliance with the STS leakage rate limits consists of two major components:

(1) A reduction in risk to the public in the event of an accidental release of secondary coolant system water; and

(2) The avoidance of a lengthy unscheduled reactor outage which could result from a steam generator tube rupture.

The cost impacts of the proposed action on industry are minimal and are primarily associated with an increase in required radioanalytical procedures. In most individual cases, there is no cost impact since most existing plants are already in compliance either with the STS or with plant specifications which are equally or more restrictive.

8.2 APPROACH

8.2.1 Objective

This analysis presents a discussion and evaluation of the implications of the proposed action, based on estimated specific values and impacts to industry and the public.

8.2.2 Scope

This analysis addresses the individual elements which contribute to the collective value and impact of the proposed action. The elements considered and the major categories to which these elements can be assigned are listed as follows:

(1) Cost impacts or savings

- Research costs
- Labor costs
- Aversion of unscheduled outage costs and equipment damage
- Aversion of equipment damage and associated outage

(2) Probability changes

- Tube rupture rate

(3) Population radiation exposures

- Reduction during normal operations
- Reduction during MSLB or tube rupture

(4) Occupational radiation exposures

- Increase from corrective actions

The primary sources of data which were utilized for this analysis are (1) technical literature, (2) cognizant NRC staff members, and (3) utility contacts.

8.3 RESULTS OF ANALYSIS

8.3.1 Industry

The values and impacts associated with the proposed action will not be evenly distributed among the nuclear power industry. Rather, they will be realized only by the small fraction of existing PWRs that have not as yet adopted the STS or equally restrictive limits for primary to secondary leakage.

There are two principal values to industry associated with the proposed action. The first is represented by the fact that the total leakage rate limit of 1 gpm helps ensure that the dosage contribution from the tube leakage will be limited to a small fraction of 10CFR100 guidelines in the event of either a steam generator tube rupture or a steam line break. The 1 gpm limit is based on the findings of analyses of assumed tube rupture or steam line break accident conditions. The demonstration of compliance with 10CFR100 dose guidelines is of value from both a regulatory and public relations point of view. It is also of value to

the industry in general to have technical specifications which are uniformly applicable.

The second major value concerns the maintenance of tube integrity under postulated accident conditions. Extensive testing and analysis has indicated that a 0.35 gpm leak rate per steam generator corresponds to a through-wall defect of a length (about 0.5 in) that would not fail under pressure differentials associated with normal operating conditions (1500 psi), a loss-of-coolant-accident (1000 psi), or a main steam line break (2575 psi) (Westinghouse Proprietary Report, 1977). Recent test results have been obtained which substantiate the previous findings (Westinghouse Proprietary Report, 1980).

The proposed action also has value to industry in a practical sense in that leakage rates provide an important indication of the existence or rate of tube degradation. Experience has shown that some forms of degradation can develop in a period of time shorter than routine inspection intervals, or may be difficult to detect with current ECT techniques. In the event that such degradation occurs, the leakage rate limits act to indicate when plant shutdown, ISI, and corrective actions should be taken. From a practical standpoint, this is perhaps the most important function of the leakage rate limits.

Experience with steam tube ruptures has shown negligible exposure to the public. Little difference would be observed with steam tube ruptures during an MSLB, since a similar depressurization of the primary would be required, as with any SGTR. Further, the probability of a coincident MSLB and SGTR is very low and any change in this probability altered leakage limit would have a negligible impact.

The costs associated with primary to secondary leakage surveillance requirements are not large. The reason for this lies primarily in the fact that all plants have an existing radiochemistry program, and most plants either already have adequate surveillance or require only minor modification of their program to achieve adequate surveillance. This cost assessment assumes that adequate instrumentation and staff are already present. Additional costs would result from labor associated with researching, developing, and documenting the revised radiochemical methods and data

interpretation, and the actual performance of the sampling and analytical procedures.

Primary to secondary leakage is quantitatively estimated by radiochemical analysis of secondary coolant system water sampled from steam generator blowdown. In addition, the leakage rate through steam generator tubes can be continuously monitored by the radiation alarm of the condenser air ejector. This alarm provides an early indication of a tube leak by detecting noncondensible radioactive gases transported by the RCS liquid through the leaking tube into the secondary system. A survey of 5 plants (10 units) revealed that a variety of methods are used by operators to estimate primary to secondary leakage. These methods are summarized in Table 8-1.

In principle, any substance that is volatile in the secondary side of the steam generator and is condensed in the condenser may be used to measure the primary to secondary leak rate. Tritium analysis usually provides the best sensitivity, although early in plant life, when the tritium concentration in the primary system is less than 0.01 µCi/g, Na-24 or F-18 analyses may provide more sensitive indications of leakage. An estimate of the cost impact resulting from the surveillance requirements associated with the proposed action is given in Table 8-2.

8.3.1.1 Reduction in Frequency of Tube Rupture

Presently the observed tube rupture ratio for all PWRs is 0.015 per reactor year. The adoption of STS has the possibility of reducing this overall probability. It is estimated that reduction of the rupture frequency is 15% or a maximum reduction of approximately .002 per year, since reduction actually applies only to those plants without STS.

8.3.1.2 Radiological Exposure

Implementation of STS for primary to secondary leakage will result in a negligible incremental occupational dose. However, the avoided occupational dose associated with avoidance of tube rupture is approximately 1 man-rem/year or 20 man-rem over 24 years. This avoid dose applies only to plants without STS.

Table 8-1. Sample of Methods for Assessing Primary to Secondary Leakage.

Plant	No. Units	Procedure	Frequency	Remarks
1	3	Measure secondary H-3 activity and relate to primary H-3 activity.		Can detect about 5 gpd leak.
2	2	Measure gross B-γ activity in secondary. If activity greater than threshold, perform analysis for specific isotope (usually Na-24).		0.001 gpm detection limit
3	2	Measure dose equivalent I-131 in secondary and relate to primary DE I-131 activity.		Confirmatory measurements on Xenon in condenser air ejector.
4		Measure Xe-133, -135 from air ejector and releate to primary activity.	Continuous	Confirmatory measurements on DE I-131.
5	2	Measure secondary H-3 activity and relate to primary H-3 activity.		Confirmatory measurements on Xenon in condenser air ejector.

Table 8-2. Costs of Implementing a Primary to Secondary Leakage Rate Monitoring Program for a PWR

Cost Item	Labor	Materials
<u>One Time Costs</u>[a]		
Research (develop and document leakage assessment prodedures)	$2,000	
<u>Recurring Costs</u>[b]		
Sampling and Analysis	$80,000/yr	$1,000/yr
Present Worth Costs Over Remaining 24 Years Plant Life	$1.3 million Total	

[a]Assumes that radiochemical procedures for analysis of tracers is already in effect.

[b]Based on time required for daily sampling and analysis for tritium (estimated from B&W Radiochemistry Manual, B&W 1410, T. L. McDaniel, Ed., 1975).

8.3.1.3 Cost

The cost required to implement STS is negligible. The estimate of avoid costs is less than .05M, less than .1M, and .1M per year for a 30, 60 or 90 day forced outage to repair steam a generator tube rupture. The cumulative cost estimate over 24 years is .5M, 1.4M, and 2.0M. This avoided cost applies only to plants without STS.

8.3.2 The Public

The intended value of the proposed action is that is minimizes both the likelihood and magnitude of offsite doses by minimizing the probability of a tube rupture and by limiting the transport of radioactive primary coolant into the secondary system. The magnitude of the realized value, in the form of reduced risk to the public, is highly dependent upon site-specific and reactor-specific factors. It is assumed that a maximum reduction in public risk of 15 percent can be achieved through this mechanism. The reduction in public risk is approximately $9 per year for cleanup of core-melt, with a public dose reduction of approximately .008 man-rem.

8.3.3 Implementation Plan

The requirement to submit proposed changes to their technical specifications to conform with the STS within 120 days of final publication of this requirement poses no undue hardships to the utilities.

8.3.4 Alternatives

There is no direct alternative analogue of leakage limits. However, all the other preventive or diagnostic/preventive actions suggested can achieve the same goal.

8.4 REFERENCE

1. T. A. Ippolito (NRC) to G. C. Lainas (NRC), "Forthcoming Meeting with Steam Generator Owners Group Proposed Generic Requirements," July 22, 1982.

9.0 VALUE-IMPACT ANALYSIS FOR "STANDARD TECHNICAL SPECIFICATION LIMIT FOR COOLANT IODINE ACTIVITY" REQUIREMENT

9.1 SUMMARY

This section states the proposed requirement and the bases for its selection and summarizes the results of the value-impact analysis.

9.1.1 Description

This analysis addresses the requirement proposed by NRC(1) that all PWRs that have technical specifications which differ from the STS in coolant iodine limits or surveillance requirements should incorporate the STS requirements.

There are two distinct technical specifications which limit coolant activity. These are limits for dose equivalent DEI-131 and limits for gross gamma-activity of non-iodine activity (designated by E) in the coolant. The specific activity of the primary coolant is limited to less than or equal to 1.0 uCi/g DE I-131, and less than or equal to 100/E uCi/g. The STS also allow for iodine spiking, which is a phenomenon which usually occurs following changes in thermal power. The allowable iodine spiking limit as a function of percent of rated thermal power is depicted in Figure 9-1. With the specific activity of the primary coolant greater than 1.0 uCi/g DE I-131, but within the allowable spiking limit shown in Figure 9-1, operation may continue for up to 48 hours. However, the cumulative operating time under these circumstances cannot exceed 800 hours in any consecutive 12-month period. If the 1.0 uCi/g limit is exceeded continuously for more than 48 hours or if the spiking limit is exceeded, the reactor must be brought to hot standby within six hours.

The iodine activity limit for secondary coolant is 0.1 uCi/g DE I-131. If the specific activity of the secondary coolant exceeds this limit, the plant must be brought to hot standby within six hours, and to cold shutdown within the following 30 hours.

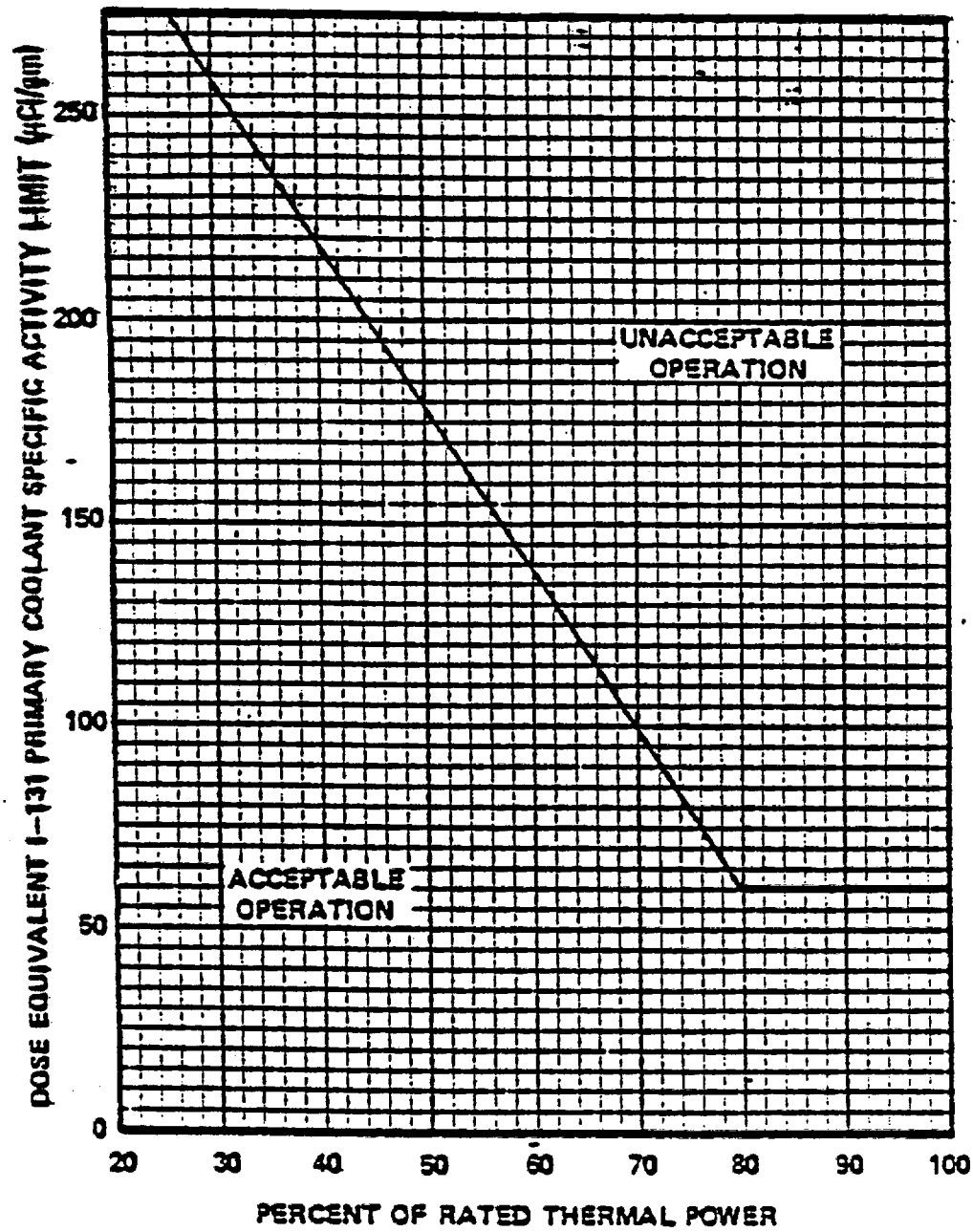

Figure 9-1 Dose Equivalent I-131 Primary Coolant Spiking Limit as a Function of Percent of Rated Thermal Power

The primary coolant surveillance requirements of the STS specify that isotopic analysis for DE I-131 concentration be performed once per 14 days. In addition, isotopic analysis for iodine, including I-131, I-133, and I-135, is required once per four hours whenever the specific activity exceeds 1.0 uCi/g DE I-131 or 100/E uCi/g, and once between two and six hours following a thermal power change exceeding 15 percent of the rated thermal power within a one-hour period. Secondary coolant must be sampled and analyzed for DE I-131 once per 31 days, whenever the gross activity determination indicates iodine concentration greater than 10 percent of the allowable limit, or once per six months, whenever the gross activity determination indicates iodine concentration below 10 percent of the allowable limit.

High coolant iodine levels are caused either by fuel cladding failures or by the existence of tramp uranium on the cladding. The ratio of I-131 to I-133 coolant activity can be used to determine the source of fission products in the primary coolant.

In addition, for the reasons cited below, it is recommended that plants which have low-head HPSI pumps and which do not have iodine limits equal to STS limits be required to implement a reduced iodine technical specification limit of 0.2 uCi/g dose equivalent I-131.

9.1.2 Need for Action

As stated in NUREG-0916, during the Ginna SGTR event, the amount of primary to secondary leakage and the total amount of water and steam released to the environment were larger than would normally be predicted because of valve malfunctions and operator actions.

The NRC staff has determined that the potential exists for doses to the population to exceed 10CFR100 guidelines from a design basis SGTR accident, but only in the event of a very unlikely, but not impossible, set of circumstances. Specifically, the following conditions must exist: primary coolant iodine concentration at the STS specific activity spiking limit of 60 uCi/g dose equivalent I-131, maximum flow rate through a double-ended tube rupture, flow through the tube rupture prolonged for two or more hours, filling of the steam generator and steam line of the affected steam genera-

tor, releases of a gas-water mixture through the affected steam generator safety or atmospheric dump/relief valves, and conservative dispersion factors. The actual radiological consequences of the Ginna SGTR accident were not severe because the reactor coolant iodine specific activity was very low (0.057 uCi/g dose equivalent I-131, or about 2 percent of the plant technical specification limit), and because the existing meteorological conditions were far more favorable that the conservative assumptions used in prior analyses.

However, eleven PWR's do not have any specific limits on radioiodine, but do have limits on total gamma activity. While the total primary coolant activity might remain substantially below the total activity technical specification shutdown value, the actual radioiodine levels could be very high. Furthermore, iodine spiking must be accomodated, but controlled, and surveillance to assure compliance is necessary.

The Standard Technical Specifications incorporate dose equivalent iodine concentration limits for all the PWR vendors which (1) incorporate suitably conservative limits, (2) accommodate, but control spiking of iodine, and (3) incorporate adequate surveillance for both primary and secondary coolants.

The primary purpose of the STS limits for dose equivalent I-131 coolant specific activity is to assure that, in all likelihood, 10CFR100 guidelines are not exceeded in the event of a design basis SGTR accident.

A reduced coolant iodine limit of 0.2 uCi/g is required for certain plants in order to provide the same margin of assurance as the STS limits. The basis for this more stringent requirement lies in the fact that some plants have low-head HPSI pumps (e.g., 1400 to 1600 psig shutoff head centrifugal pumps) which have more difficulty in responding to an SGTR event than plants with high-head HPSI pumps (e.g., 2500 psig shutoff head centrifugal pumps). As a result of the limited make-up rate of low-head pumps at high pressure, the small LOCA induced by the SGTR event may result in a continuing net loss of coolant from the RCS. The RCS thus remains at high pressure and the void fraction (i.e., the fraction of steam with respect to water in the primary system) continues to increase as coolant inventory decreases. For this reason, it has been recommended that the

reactor coolant pumps (RCPs) be tripped to prevent core uncovery during the accident (NUREG-0623). Tripping the RCPs reduces the rate of leakage from the RCPs since this allows only steam, as opposed to a steam-water mixture, to be discharged through the tube rupture. However, without the RCPs running, the pressure in the RCS remains high longer (e.g., normal pressurizer spray is not operable when the RCPs are secured) and the total loss of coolant from the SGTR event is greater than if the RCPs were not tripped. Once the pressure is reduced, the leakage from the RCS into the steam generator will stop.

Plants with low-head HPSI pumps cannot assure that core uncovery will not occur in the intial response phase following an SGTR, and thus require RCP trip. In plants with high-head HPSI pumps, the potential for core uncovery is not of great concern, and the RCPs can remain running and allow for a more rapid depressurization of the RCS, which minimizes the total coolant inventory loss. Plants with low-head HPSI pumps, thus, have a potential for much greater coolant inventory loss to the environment in such sequences. Analyses performed by the NRC staff indicated that in such conditions where steam generator overfill occurs, with an attendant release to the environment of 200,000 lb of coolant (as water and steam) at one-half of the spiking iodine activity limit of 60 uCi/g, excessive offsite doses could result. The reduced coolant iodine limit of 0.2 uCi/g specified for plants in which such events may occur (i.e., plants with low-head HPSI pumps) is consistent with the coolant activity limits required to keep resultant offsite doses to within acceptable levels.

9.1.3 Summary of Values and Impacts

The major value of the proposed action is that it assures the margin of safety which constitutes the basis for the STS coolant iodine limit by requiring all PWR plants to incorporate either the STS or more stringent limits. The safety value associated with STS or other limit compliance is realized in the form of a reduction in risk to the public in the event of an SGTR accident even though this risk is extremely low for SGTR events, on the order of 10^{-7} probability with only 0.5 man-rem public risk per reactor year.

The cost impacts of the proposed action on industry will be borne by the eleven PWRs which currently do not have technical specifications for coolant iodine activity, two which have less restrictive limits, and four PWRs which currently do not have surveillance programs that meet the STS. The impact on plants having current iodine coolant activity levels greater than STS values could be substantial, in some cases requiring partial replacement of the core. However, all units which would be impacted by this requirement appear to currently be within the limits. In addition, there are minor cost impacts associated with expand ed surveillance programs of about $0.4 million in present worth.

9.2 APPROACH

9.2.1 Objective

This analysis presents a discussion and evaluation of the implications of the proposed action, and arrives at a conclusion as to whether or not justification exists for the proposed action to be undertaken as recommended. Specific values and impacts to industry and the public must be identified, and existing data required to quantitatively support estimates for these values and impacts are gathered. The primary sources of data utilized for this analysis are: (1) technical literature, (2) cognizant NRC staff members, and (3) utility contacts.

9.2.2 Scope

This analysis addresses the individual elements which contribute to the collective value and impact of the proposed action. The elements considered and the major categories to which these elements can be assigned are listed as follows:

(1) Cost impacts or savings

- o Labor costs
- o Equipment costs
- o Fuel replacement costs
- o Unscheduled outage costs

(2) Population radiation exposure

- Reduction from SGTR initiated accidents (including the probability of exceeding 10CFR100 dose guidelines)
- Reduction from replacement of leaking fuel

(3) Occupational radiation exposures

- Increase from surveillance requirements
- Increase from replacement of leaking fuel
- Reduction from reduced coolant activity

9.3 RESULTS OF ANALYSIS

9.3.1 Industry

The values and impacts associated with the proposed action will not be evenly distributed among the nuclear power industry. Rather, they will be realized only by PWR plants falling into either of the following categories: (1) plants which have high-head HPSI pumps and which have not yet adopted the STS iodine coolant limits, or (2) plants which have low-head HPSI pumps and which do not have coolant iodine limits as restrictive as STS limits. At the present time, approximately 11 plants do not have iodine coolant limits, two plants have limits which are less restrictive than STS limits, and four plants do not have adequate surveillance programs. Two of these plants currently do not have specifications for coolant iodine activity and would be affected by the proposed 0.2 uCi/g limit.

Values

The major value of the proposed action is represented by the fact that the affected plant will be able to demonstrate compliance with 10CFR100 with respect to design basis SGTR accidents. Compliance with STS coolant iodine limits (or, in the case of certain plants, reduced coolant iodine limits) assures that Part 100 dose guidelines will not be exceeded, and the demonstration of compliance with Federal standards

is valuable to the plant from both a regulatory and public relations point of view.

There is no value to averted occupational exposure due to the lower iodine limits. Most exposure rates around primary or secondary system components are due to gross beta-gamma activity of the coolant, past deposition of fission and corrosion products, etc.

Impacts

The impact of the proposed action on industry consists of two major components:

(1) Increased costs associated with potential fuel replacement, unscheduled outages, or increased surveillance requirements.

(2) Increased occupational radiation exposures associated with potential fuel replacement or increased surveillance requirements.

Since high coolant iodine levels are indicative of failed or contaminated fuel cladding, prolonged or repeated operation above STS limits could result in the need to replace defective fuel in order to remain within the limiting condition for operation. The fraction of the core requiring replacement would vary on the nature, extent, and distribution of the fuel defect, the past history of fuel performance, the ability of the operator to characterize or isolate the defect, and other factors. Additional costs would be incurred by the purchase of replacement power during the forced outage.

Since four plants do not have adequate surveillance requirements, these plants will incur the costs associated with the development, documentation, and implementation of the procedure necessary to adequately demonstrate compliance. An estimate of the costs associated with coolant iodine monitoring, as well as the accompanying license amendment costs, are presented in Table 9-1.

A small increase in occupational radiation exposure will probably result from increased primary coolant sampling and handling in plants which

Table 9-1. Costs Associated with Coolant Iodine Monitoring

Cost Item	Professional[1]	Labor Technician[1]	Cost	Other Costs	Total Costs
One-Time Costs[2]					
Research (develop and document assessment procedures for dose-equivalent I-131)	40 hours	-	$ 2,000	-	$2,000
Recurring Costs					
Sampling and analysis[4,5]	-	595 hr/yr	$23,800	-	$23,800
Supplies, reagents, waste disposal, etc.	-	-	-	$1,000	1,000
Total	-	595 hr/yr	$23,800	$1,000	$24,800/yr

must upgrade their surveillance programs. These exposures can be held to minimal levels by proper application of ALARA techniques, and should not constitute a source of significant impact. However, a significant increase in occupational exposures may result from fuel replacement operations dictated by compliance with reduced coolant iodine limits. The unloading of an entire core, removal of the fuel to the spent fuel storage area, and the reloading of the core can be expected to result in a dose range of about 25 person-rem (NUREG/CR-1595) to 60 person-rem (AIF). This range can be considered an upper limit of the occupational exposures that may result from the replacement of defective fuel for purposes of STS compliance.

The possibility of implementing this proposed requirement and having one or more plants be unable to operate within the limits is seen above as the major impact, both in cost and exposure. The units which would be implementing this requirement were investigated for their present iodine concentrations to see if they were within the proposed limits. A telephone survey (2) was conducted with the results as shown in Table 9-2.

All plants were found to be operating within the proposed limits, with the exception of two plants (which would implement the 100% iodine STS) for which data was unavailable. Assuming these other two plants are found to be within the limits, the potential major impacts on cost and exposure due to fuel replacement are found not to apply.

9.3.2 The Public

The intended value of the proposed action is that it assures that 10CFR100 thyroid dose guidelines will not be exceeded in the event of a design basis SGTR by limiting the total amount of coolant iodine activity available for release to the environment. The proposed action may also reduce offsite doses associated with normal plant operation by limiting the amount of coolant activity available for release in routine effluents. However, this benefit is of only minor significance since the overall release to the public by a SGTR leading to core melt is 0.5 man-rem per reactor year.

Table 9-2 Present Status (09/03/82) of Several Units Which Would Implement the Iodine Requirement (2)

	Measured Value		DEI-131 Value
A. 100% of STS			Limit 1.0 uc/g
Kewaune 1	2.7×10^{-2}	uc/g Gross I	Neg
Kewaune 2	2.2×10^{-2}	uc/g Gross I	Neg
Kewaune 3	1×10^{-2}	uc/g Gross I	Neg
Oconee 1	0.24	uc/g Gross I	Order $\_10^{-1}$ uc/g
Oconee 2	0.45	uc/g Gross I	Order $\_10^{-1}$ uc/g
Oconee 3	0.16	uc/g Gross I	Order $\_10^{-1}$ uc/g
TMI 1 & 2	(Shut)		
Haddan Neck	No Data		
Rancho Seco	No Data		
B. 20% of STS			Limit 0.2 uc/g
Point Beach	0.37	uc/g Gross I	0.1 uc/g
Indian Point 2	0.21	uc/g 131 & 133	_.2 uc/g

9.3.4 Implementation Plan

The implementation plan states that within 60 days of issuance of the proposed requirement to licensees, all PWR licensees not presently using the STS for primary and secondary coolant iodine activity and surveillance thereof shall be required to adopt and implement the STS values and so notify the staff. Each PWR licensee will be requested to submit, within 90 days of issuance of this requirement to licensees, a request for changes to the technical specifications as required to implement this requirement. Subsequently, requests for modification of the STS to incorporate plant specific information will be considered by the NRC staff, if such requests are suitably justified. Applicants for an operating license will be required to commit to the STS for coolant iodine as part of the licensing process.

No specific impacts due to this schedule are foreseen, unless iodine limits cannot be met by a given plant. At that juncture it would probably be effective to delay implementation of the requirement until the scheduled fuel change.

9.3.5 Alternatives

The only reasonable alternatives to the proposed action are:

(1) Maintenance of the status quo.
(2) Imposition of totally uniform STS limits, or
(3) Imposition of less restrictive STS limits.

Alternative 1 is unacceptable because there are no valid bases for the exlcusion of coolant iodine limits from a PWR's technical specifications, as is currently the situation for elevent PWRs. In addition, the existence of inadequate surveillance programs, such as those that currently exist at four plants, cannot be justified on technical grounds.

The imposition of uniform STS limits is not a technically sound alternative for the reasons discussed above with respect to PWRs with low-head HPSI pumps.

The imposition of less restrictive coolant iodine limits is not justifiable since analyses have indicated that the probability of exceeding 10CFR100 dose guidelines during DBA conditions is unacceptably high.

9.4 REFERENCES

1. T. Ippolito to G. Lainas, NRC, Memorandum, "Forthcoming Meeting with Steam Generator Owners Group - Proposed Steam Generator Generic Requirements", July 22, 1982.

2. Telecon with F. Akstulewicz, NRC, September 3, 1982.

10.0 VALUE-IMPACT ANALYSIS OF "A STUDY OF REACTOR COOLANT SYSTEM PRESSURE CONTROL DURING A STEAM GENERATOR TUBE RUPTURE (SGTR)" REQUIREMENT

10.1 SUMMARY

This section describes the proposed requirement and its basis for selection and summarizes the results of the value-impact analysis.

10.1.1 Description

This analysis addresses the requirement proposed by NRC that licensees/vendors should conduct a study to determine the optimal means of controlling and reducing reactor coolant system pressure during and following a steam generator tube rupture with emphasis on existing plant systems and equipment. The spectrum of possible initial conditions, reactor coolant system (RCS) thermal-hydraulic conditions and break sizes should be considered. The use of the pressurizer auxiliary system should be explicitly examined since its use may eliminate the necessity to use the pressurizer power-operated relief valve (PORV) in cases where forced RCS flow has been lost. The study should address the following objectives:

1. Minimizing the primary to secondary leakage through the broken steam generator tube;

2. Maximizing control over system pressure;

3. Minimizing the chances of producing voids in the RCS, and other complicating effects.

Based on the results of the study, licensees should be able to optimize pressure control procedures, techniques, and systems considering an SGTR with or without offsite power.

10.1.2 Need for Action

Without forced reactor coolant flow, which may occur due to reactor coolant pump (RCP) trip or as a result of a loss of offsite power, the necessary RCS depressurization following an SGTR is more difficult because of the loss of normal pressurizer spray. RCS fluid contraction caused by the cooldown from the dumping of secondary-side steam to either the main condenser or to the atmosphere, will result in some reduction in RCS pressure but other measures must be taken to expeditiously reduce the RCS pressure to the point where primary coolant flow into the damaged steam generator stops. The pressurizer PORV was used during the Ginna and Prairie Island SGTR events to reduce RCS pressure. However, control of RCS pressure is difficult with the PORV since its use creates an additional loss of coolant. The decrease in RCS pressure can be so rapid that steam voids may be formed in the reactor vessel upper head, and in the top of the steam generator U-tubes and further complicate the RCS depressurization. Void formation can lead to concerns regarding core cooling. The Ginna operators were sufficiently concerned that they left the safety injection pumps operating, thereby overfilling the steam generator via primary-to-secondary leakage through the ruptured tube. The resulting secondary-side pressure transient caused the main steam safety valves to lift, releasing radioactive material directly to the atmosphere. It is not apparent that the auxiliary spray from the charging system could have successfully lower RCS pressure to the point where primary coolant flow into the steam generators is stopped. It may have been that, by spraying cold charging fluid into the pressurizer, the decrease in pressure would have resulted in void formation, thus expanding the RCS fluid volume, filling the pressurizer, and rendering further spray flow ineffective. This phenomena should be examined as well as the thermal stresses on the spray nozzle itself.

10.1.3 Summary of Values and Impacts

The major value of the proposed action is that it could ensure that the licensee has implemented acceptable procedures for meeting the criteria for optimizing control of reactor coolant pressure to minimize primary to secondary leakage following an SGTR. With these procedures in place, the potential for overfilling a steam generator and the quantity of radioactive material released directly to the atmosphere following an SGTR

should be reduced. The major impacts are the costs of performing the required study and implementing the findings of the study. The cost of evaluating and comparing the individual studies (presumably by the NRC) is another impact.

10.2 APPROACH

10.2.1 Objective

The objective of this value-impact analysis is to make some preliminary estimate of the values and impacts of conducting a study and implementing findings regarding optimization of RCS pressure control following an SGTR event.

10.2.2 Scope

The values and impacts identified below are evaluated with respect to costs, risk reduction and occupational exposure. As with all "study" type actions, its value depends on whether or not: (1) the results of the study will point to a valid improved course of action, and (2) such action will be implemented.

<u>Values</u>

a. Verifies that all PWR plants can meet the applicable criteria for terminating leakage from the RCS into the steam generators following an SGTR.

   1. Reduces probability of overfilling the steam generators
   2. Reduces potential offsite radiological consequences on an SGTR.

b. Reduces secondary coolant system cleanup requirements following an SGTR.

   1. Reduces amount of primary coolant leakage into secondary coolant system.

2. Reduces volume of radioactive waste generated by cleanup activities
3. Reduces occupational exposure associated with cleanup activities.

Impacts:

a. Cost of study
b. Cost of implementation

10.3 RESULTS OF ANALYSIS

10.3.1 Industry

Values

The analysis of an STGR event is included in the FSAR of PWR plants, and is based on certain assumptions, including the time following an SGTR by which primary-to-secondary leakage can be stopped. The documenation of the optimized approach for post-SGTR RCS pressure control will verify that a capability consistent with the FSAR assumptions exists and that it reflects the latest lessons learned from the Ginna and Prairie Island SGTR events.

As described in the paragraph above, the optimzied approach for RCS pressure control can reduce the volume of primary coolant which leaks into the secondary coolant system following an SGTR. Approximately 300,000 pounds of water flowed from the RCS into the "B" steam generator during the Ginna SGTR event (2). In the secondary coolant system, primary coolant is a contaminant which must be removed. The cleanup process will generate liquid and solid waste which may require further processing or proper disposal.

The plant worker population dose from the Ginna SGTR event was estimated to be 0.6 person-rem (2). Cleanup activities only account for a portion of this total dose, therefore, occupational exposure savings of less than 0.6 person-rem per SGTR event would be anticipated as a result of implementing the proposed action.

Impacts

The cost of the study is likely to be highly variable, depending on the present capability for RCS pressure control following an SGTR and the incremental improvement required. As a minimum, the study may require a review and documentation of how existing systems and procedures already provide the requisite capability. This type of study would likely have a cost on the order of a $10,000 to $30,000. In other plants, the study may require thermal-hydraulic modeling of the primary and secondary coolant systems as well as detailed stress analysis of selected components such as the pressurizer auxiliary spray nozzle. A study in this depth, and the development of an optimized approach for RCS pressure control could cost on the order of $100,000 or more.

The cost of implementing an optimized approach for RCS pressure control is likely to be highly variable, depending on the adequacy of the present RCS pressure control capability and the differences between the present and the optimized approach. The cost associated with implementing an optimized approach for RCS pressure control is not presently quantifiable, but may include some or all of the following items of cost:

- Developing, validating, and implementing new emergency procedures.
- Training plant operators.
- Replacing equipment or upgrading equipment qualification if existing equipment must be operated outside of the conditions for which it was originally designed and qualified.

10.3.2 Public

With the optimized approach for RCS pressure control, risk associated with an SGTR may be reduced by reducing the potential radiological consequences. As reported in NUREG-0916 (3) the NRC staff estimated that the maximum-exposed offsite individual could have received a thyroid dose of less than 5 millirems and a whole body dose of 0.5 millirem from the Ginna SGTR event. In addition, the whole-body population dose within a 50 mile radius of the plant was estimated to be less than 0.1

person-rem. With optimized RCS pressure control, population dose savings up to this amount may be realized for SGTR events. As noted in NUREG-0916, the risk from exposure to radioactive materials released from Ginna was low compared to many other types of risk, and the radiation-related risk is based on conservative assumptions. Risk to real individuals from exposure to radioactive materials following the Ginna SGTR event was judged to be insignificant (3).

There is some probability that improved means of controlling RCS pressure during steam generator tube rupture could prevent a core melt-down. As an upper limit, it is estimated that ten percent of potential core melts could be prevented through optimized pressure control techniques. Further, it is presumed that these studies will result in implementation of an optimized program in thirty percent of the cases, so that roughly 3 percent of potential core melts can maximally be prevented by this program.

10.3.3 Implementation Plan

These basic requirements assume that optimized use of existing equipment will provide adequate RCS pressure control following an SGTR. If the results of the licensee/vendor study indicates that the required capability cannot be provided by existing equipment, an alternate plan for implementation will have to be developed.

10.3.4 Alternatives

<u>RCS Pressure Control Training Approach</u>

Since procedures are in place at operating reactors for controlling RCS pressure under normal and emergency conditions, and since operators are trained thereon, an upgrade of training procedures for pressure control for reactor operators could be as effective as the study proposed.

<u>Study by Independent Organization</u>

Rather than have each utility do its own study, a study of RCS pressure control options of all plants by a single, independent organization

is an alternative. Efficiency and objectivity should be enhanced; cross comparison of different plants would be available; use of "experts" would be more efficient; determination of the need for an industry-wide upgrade of the procedures would be available.

10.4 REFERENCES

1. T. Ippolito (NRC) to G. C. Lainas (NRC), "Forthcoming Meeting With Steam Generators Owners Group - Proposed Generic Requirements," July 22, 1982.

2. NUREG-0909, "NRC Report on the January 25, 1982 Steam Generator Tube Rupture at R. E. Ginna Nuclear Power Plant," U. S. Nuclear Regulatory Commission, April 1982.

3. NUREG-0916, "Safety Evaluation Report Related to the Restart of R. E. Ginna Nuclear Power Plant," U. S. Nuclear Regulatory Commission, May 1982.

11.0 VALUE-IMPACT ANALYSIS OF "SAFETY INJECTION (SI) SIGNAL RESET" REQUIREMENT

11.1 SUMMARY

This section states the proposed requirement, the basis for its selection and the results of the value-impact analysis.

11.1.1 Description

This analysis addresses the requirement proposed by NRC (1) that control logic associated with safety-related equipment should be reviewed to minimize the potential loss of safety function associated with SI Reset. For example, automatic actions such as the switchover of safety injection (SI) pump suction from the boric acid storage tank (BAST) to the refueling water storage tanks (RWST) should be evaluated with respect to whether the switchover should be made on the basis of low BAST level, without considerations of the condition of the SI signal.

11.1.2 Need for Action

In the Ginna design (1) (2), emptying of BAST following reset of the SI signal can cause loss of all SI pumps due to cavitation if rapid manual actions are not taken. This is because the SI pump suction is designed to shift automatically on low BAST level from the BAST to the RWST only if the SI signal has not been reset (e.g., SI signal still present). The Ginna SI system is shown in Figure 11-1 (from Reference 1). This particular SI system configuration is believed to be found only at 2-loop Westinghouse plants (e.g., Kewaunee, Ginna, Prairie Island 1 and 2, and Point Beach 1 and 2) and at Indian Point 2.

An improved design may be achieved if automatic transfer from the BAST to the RWST is provided on low BAST level under all operating conditions. This is a desirable feature since, in the event of a steam generator tube rupture (SGTR), the level of the BAST may not drop to the low level switchover setpoint for 20 to 30 minutes during which time the operators are precluded by procedures from resetting SI. SI must be reset before CI

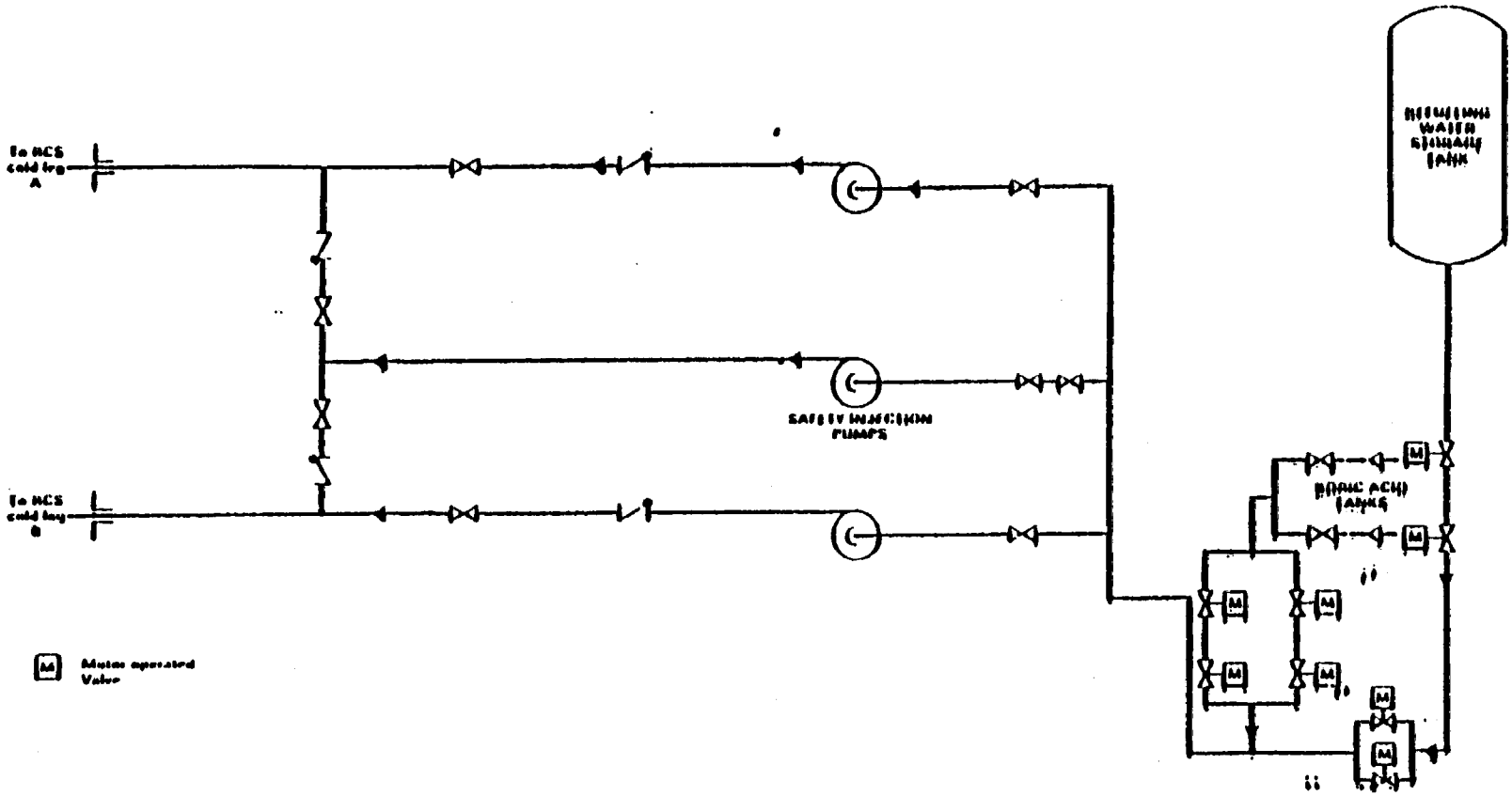

Figure 11-1. Flow Diagram of the High-Pressure Portion of the Ginna Safety Injection System (from NUREG-0909)

(containment isolation) can be reset. Resetting CI allows operation of equipment and systems that can aid in mitigating the consequences of a steam generator tube rupture. In particular, resetting CI would permit the operators to reestablish instrument air for the operation of air-operated valves associated with the following functions:

- CVCS letdown
- Normal pressurizer spray
- Auxiliary pressurizer spray
- Normal charging
- Auxiliary charging
- Reactor coolant pump seal return (to CVCS)
- Pressurizer power-operated relief valves (these valves have a backup nitrogen system)

11.1.3 Summary of Values and Impacts

The major value of the proposed action is that it reduces the risk associated with an SGTR. Failure of the SI pumps due to cavitation or airbinding is a common-mode effect that could cause a loss of the high-pressure coolant inventory control function and could result in increased consequences of an SGTR. The cost of implementing the modification indicated necessary by the proposed review is the major impact. No negative impacts on overall plant performance have been identified.

11.2 APPROACH

11.2.1 Objectives

The objective of this analysis is to make some preliminary estimate of the values and impacts related to the requirement to review the control logic associated with safety-related equipment to minimize the loss of safety function associated with SI Reset and the implementation of improved designs and modifications.

II.2.2 Scope

For each of the potential impacts and values identified below, quantitative and qualitative information is used to assess the overall merit of the requirement.

Values

- Reduces risk from SGTR
  - Reduces probability of SI pump failure due to cavitation or airbinding
  - Reduces probability of loss of high-pressure reactor coolant inventory control function
  - Reduces probability of more severe radiological consequences as a result of loss of safety function
- Reduces the potential complexity of plant response following a SGTR
  - Reduces or eliminates operator actions needed to protect SI pumps against cavitation
  - Reduces probability of loss of high-pressure reactor coolant inventory control function

Impacts

- Cost of valve control modifications.
- Cost to public for implementation of proposed action, in terms of higher utility rates.

11.3 RESULTS AND ANALYSIS

11.3.1 Industry

Value

- Reduces risk from SGTR

In the scenario described in Section I.8, it appears possible for a combination of normal manual and automatic system responses following an SGTR to cause a system alignment that results in cavitation and airbinding of the SI pumps in some PWR plants. Safety-related pumps are not normally designed for extended operation in a cavitating or air-bound state. In fact, it has been recognized that loss of suction in cmparable auxiliary feedwater pumps may lead to pump damage "in a short period of time, possibly too short for the operators to take actions that would protect the pumps" (3). Conservatively, it should be assumed that the SI pumps will be damaged and will fail with a probability of 1.0 if system alignment results in cavitation. The proposed action reduces the probability that such an alignment of the SI system will occur.

During response to an SGTR, it is possible that all SI pumps will be operating. As can be seen in Figure 11-1, these pumps may share a common suction path. Loss of pump suction may therefore result in a common-mode, cavitation-induced failure of all SI pumps. This in turn may result in a loss or a significant reduction of the high-pressure reactor coolant inventory control capability in some plants. All of the plants listed in Section I.8 have an SI system and a lower-capacity charging system that could provide a limited high-pressure reactor coolant inventory control capability following failure of the SI system. Adequacy of this capability should be assessed on an individual plant basis.

Loss of the high-pressure reactor coolant inventory control function following an SGTR could lead to radiological consequences more severe than those observed following the Ginna SGTR event. The specific event sequences related to this loss of safety function, and the potential consequences should be assessed on an individual plant basis. Note that the radiological consequences of the Ginna SGTR event were evaluated in NUREG-

0916 (4), and the whole-body population dose within a 50-mile radium was estimated to be less than 0.1 person-rem.

Plants that are vulnerable to the scenario described in Section II.I.2 (or other comparable scenarios) require properly coordinated operator actions to ensure that SI pump cavitation does not occur during response to an SGTR event. The proposed action will reduce or eliminate the need for operator actions to protect the SI pumps against cavitation. The likelihood of operator error contributing to SI pump failure should therefore be reduced. In WASH-1400 (5), the probability of an operator error of omission (e.g., failure to establish proper SI pump alignment after the SI reset) was estimated to be 1.0×10^{-2}.

Plant response following an SGTR should be more predictable as a result of (1) reducing the probability of cavitation failure of SI pumps, and (2) reducing the need for safety-related operator actions to protect the SI pumps.

Impacts

The costs of valve control modifications are dependent on the design details of the existing valve control circuits and on the number of valve control circuits which are modified. For the SI system shown in Figure 11-1, at least four valve control circuits must be modified (two parallel valves in the flow path from the RWST and from the BAST). Total costs for this plant are estimated to be approximately $100,000 per plant.

11.3.2 Public

Value

Since WASH-1400 estimates operator error in failure to establish SI pump alignment prior to reset at 10^{-2}, this is used as an upper bound to the reduction in frequency of core melt resulting from such a change. Therefore, reduction in public risk of 1% is the assumed upper limit value.

Impact

Reflection of costs of implementation on utility rates, where individual plant costs are expected to average about $100,000.

This reduction in public translated to less than one dollar per year for clean up of core melt and public dose reduction of $\leq$.0006 man-rem.

11.3.3 Implementation Plan

No schedular impacts are foreseen for implementation of the requirements to complete the review by January 30, 1983.

11.3.4 Alternatives

The following alternative recommendations are presented:

a. Add a low suction pressure trip input to the control circuits for each of the SI pumps. This type of trip input would likely require one suction pressure trip channel per pump control circuit. A control room alarm should also be added to alert the operator to the protective automatic shutdown of the SI pumps. This type of trip circuit may adversely affect SI pump reliability (e.g., fault in low suction pressure trip portion of control circuit may prevent operation of pump).

b. Replace SI pumps with units specifically designed to remain operational following extended cavitation or airbound operation. Concern over timely realignment of the pump suction would thereby be eliminated. Commercial availability of such pumps has not been investigated.

c. Revise operating procedures to require that the operator transfer SI pump suctions to the RWST before resetting SI. This corrective action was taken at Ginna following the SGTR event (Reference 4).

II.4 REFERENCES

1. T. Ippolito to G. C. Lainas, Memorandum, "Forthcoming Meeting with Steam Generator Owners Group - Proposed Steam Generator Generic Requirements", July 22, 1982.

2. NUREG-0909, "NRC Report on the January 25, 1982 Steam Generator Tube Rupture at R. E. Ginna Nuclear Power Plant", U. S. Nuclear Regulatory Commission, April 1982.

3. NUREG-0611, "Generic Evaluation of Feedwater Transients and Small Break Loss of Coolant Accidents in Westinghouse Designed Operating Plants", U. S. Nuclear Regulatory Commission, January 1980.

4. NUREG-0916, "Safety Evaluation Report Related to the Restart of R. E. Ginna Nuclear Power Plant", U. S. Nuclear Regulatory Commission, May 1982.

5. WASH-1400, "Reactor Safety Study", U. S. Nuclear Regulatory Commission, October 1975.

12.0 VALUE-IMPACT ANALYSIS OF "CONTAINMENT ISOLATION AND RESET" REQUIREMENT

12.1 SUMMARY

This section describes the requirement proposed by NRC(1) and the basis for its selection and summarizes the value-impact analysis.

12.1.1 Description

This section describes the requirements proposed by NRC(1) that all PWRs should review and evaluate the response of the Chemical and Volume Control System (CVCS) letdown flow path to containment isolation and reset signals. Specifically, PWRs should evaluate the containment isolation (CI) systems and determine if any modifications are necessary to assure isolation of the low pressure portion of the letdown line inside containment (and its relief valve), thereby avoiding an unnecessary RCS leak during a steam generator tube rupture (SGTR) event.

12.1.2 Need for Action

During the Ginna event, the RCS letdown orifice isolation and level control valves closed as designed as pressurizer level initially decreased. In addition, the containment isolation valve in the letdown line also closed, as designed, on a containment isolation signal. However, as pressurizer level recovered later in the event, the selected letdown orifice isolation valve and the level control valve reopened as designed. Consequently, the letdown line was communicating with the reactor coolant system while the downstream portion of the letdown line remained isolated, causing the relief valve on the letdown line to open at its setpoint pressure of 600 psig. This valve relieves to the pressure relief tank and was the major contributor to the pressure relief tank level. The Ginna containment isolation design therefore caused an unnecessary and undesirable leak during an already complex event.

12.1.3 Value and Impacts

The major value of this proposed action is that it reduces the potential complexity of plant response following an SGTR. Demands on the operator are therefore reduced, and plant response should be more predictable. The cost of the study to review and evaluate CI systems is estimated at $40,000. There are also minor savings in avoided occupational exposure of about 0.6 man-rem resulting from an SGTR event. Also, the avoided cost of clean-up is a maximum of $30,000 per SGTR. The major impact is the cost of implementing any proposed action involving plant modifications to ensure containment isolation. Due to the variability of plant design, the number of plants affected, and the detailed system changes necessary to implement this proposed action, industry-wide impacts are presently unknown. On an individual plant basis, it is estimated that costs could run as high as $200,000.

Overall, the impacts appear to exceed the values of this proposed requirement if implementation causes plant modifications of any cost.

12.2 APPROACH

12.2.1 Objectives

The objective of this value-impact analysis is to make some preliminary estimate of the values and impacts of implementing the proposed requirement related to a review of CVCS letdown line value controls and the Containment Isolation System and modifications indicated necessary by the review.

12.2.2 Scope

This analysis includes an estimation of the values and impacts in terms of costs, risk reduction, and exposures associated with the elements identified below.

Values

- Reduces the potential complexity of plant response following an SGTR:
  - Prevents a challenge of the CVCS letdown line relief valve following reset of containment isolation.
  - Prevents establishing an undesirable reactor coolant blowdown path from the RCS to the pressurizer relief tank via the CVCS letdown line relief valve.
  - May prevent overfilling the pressurizer relief tank and dumping reactor coolant to the containment sump.
- Reduces containment cleanup following an SGTR:
  - Reduces or eliminates contamination of containment caused by overfilling the pressurizer relief tank
  - Reduces volume of radioactive waste generated by cleanup activities.
  - Reduces occupation exposure associated with cleanup activities.
  - Reduces labor costs of cleanup.

Impacts

- Cost of CVCS valve control circuit modifications

12.3 RESULTS OF ANALYSIS

12.3.1 Industry

Value

If the orifice isolation valves remain closed, there will be no challenge of the CVCS letdown line relief valve following reset of containment isolation. This relief valve is downstream of the letdown orifices and is intended to protect the low pressure portion of the CVCS letdown line against overpressure. The capacity of this relief valve is generally equal to the maximum flow rate through all letdown orifices (2). The relief valve is set to lift at a pressure equal to the design pressure of the low-pressure portion of the CVCS letdown line (e.g., about 600 psig). In WASH-1400 (3), the probability of a relief valve failure-to-open was estimated to be 3×10^{-2} per demand.

If the relief valve is challenged following CI reset, and it opens as designed, a continuing discharge of coolant from the RCS to the pressurizer relief tank will occur. At Ginna, the CVCS letdown line relief valve was the most significant source of water discharged to the pressurizer relief tank (4). Following the SGTR, this tank was filled (e.g., 800 ft^3, or about 5980 gallons) and an additional 1320 gallons of water was discharged to the containment sump after the pressurizer relief tank rupture disk blew. Without the water attributable to the CVCS letdown line relief valve blowdown, it is likely that the Ginna pressurizer relief tank would not have been overfilled and the containment would not have been contaminated.

If the relief valve is challenged and fails to open (estimated probability of 3×10^{-2} per demand), it is possible that the low-pressure portion of the CVCS letdown line could be overpressurized to as much as four times design pressure (e.g., to about 2400 psig). As a minimum, there would be very good reason to suspect that the low-pressure portion of the CVCS letdown line was overstressed by the exposure to higher than design pressure. If the CVCS pressure boundary remained intact, a detailed stress analysis would be required to determine the transient loading on the low-pressure portion of the system. Before the CVCS was returned to normal

operation it would be necessary to repair or replace components that were significantly overstressed.

As described previously, approximately 1320 gallons of reactor coolant was dumped to the containment sump when the pressurizer relief tank (PRT) was overfilled and its rupture disk blew. If the CVCS letdown line relief valve had remained isolated, the sustained blowdown to the pressurizer relief tank would not have occurred, and it is likely that no water would have been released to the containment sump. Dewatering and cleanup of the sump would therefore have been unnecessary.

The PRT collected water from several sources following the SGTR at the Ginna plant. The sources of water, in order of their significance, were: CVCS letdown line relief valve; reactor coolant pump seal injection return line relief valve; and one pressurizer power-operated relief valve used for RCS depressurization (4). If the letdown line had remained isolated, the volume of water discharged to the PRT would have been reduced by at least on-third (e.g., by at least 2430 gallons). The volume of radioactive waste generated by an SGTR would be reduced by at least this amount if modifications were made to maintain the low-pressure portion of the CVCS letdown line isolated following reset of containment isolation.

Typical processing options for this liquid radioactive waste include: processing for coolant and boric acid recycle, and disposal as liquid waste. Disposal as a liquid waste is an upper bounds to the cleanup costs. An estimate of the cost for commercial disposal of a volume and type similar to that in containment following the Ginna event has been provided by a commercial waste disposal firm. This cost is on the order of $20-30K (7).

The plant worker population dose from the Ginna SGTR event was estimated to be 0.6 person-rem (5). Cleanup activities only account for a portion of this total dose, therefore, occupational exposure savings of less than 0.6 person-rem per SGTR event would be anticipated as a result of implementing the proposed action.

The pressurizer relief tank is protected against overpressure by a rupture disk which will burst at a predetermined pressure and relieve tank

pressure. To restore the PRT to operation the rupture disk must be replaced. In addition, it is likely that the PRT will by hydrostatically tested to verify proper installation of the new rupture disk. The proposed action will likely prevent overfilling the PRT and bursting the rupture disk following an SGTR. There will be cost savings associated with not having to replace the rupture disk. This would be a relatively minor cost savings in comparison to the cost of implementing the proposed action. As explained above, occupational exposure savings of less than 0.6 person-rem per SGTR event would be anticipated.

Impact

These costs are highly dependent on the design standards (e.g., Class 1E or Nonclass 1E) of the existing control circuits and the nature of any new interface with the CI actuation system (e.g., Class 1E-to-Class 1E, or Class 1E-to-Nonclass 1E). Items of cost associated with implementing the proposed action will vary from plant to plant, but may include some or all of the following:

1. Engineering and design

2. Replacement of Nonclass 1E CVCS valve operators and control circuits with Class 1E valve operators and control circuits.

   - Relocation of control circuits in Class 1E cabinets
   - Rerouting control cables
   - Interfacting with Class 1E power supplies
   - Recurring costs for upgraded valve testing and QA

3. Modifications of existing valve control circuit to incorporate a revised interface with the CI system.

There is considerable variety in the details of CVCS valve controls and containment isolation system features. Some plants may require major modifications while others may already have acceptable systems. Cost and design impacts are therefore not presently quantifiable with any reasonable precision.

An example CVCS is shown in Figure 12-2. The letdown line valving in this figure is basically the same as shown in Figure 12-1 for the Ginna plant. Relevant valve control circuits for the CVCS in Figure 12-2 appear in Figures 12-3 to 12-5 (6). Note in these figures that the CI system interfaces with isolation valves inside and outside containment and that the letdown line safety valve is between the two isolation valves. As long as a CI signal is present (e.g., not reset), the isolation valves will not open automatically. These valve control circuits may serve as a useful point of comparison with other CVCS letdown valve control configurations in the field. Based on systems similar to that shown in Figure 12-2, an estimate of $200,000 per modification is made.

12.3.2 Public Risk

No significant value or impact on the public.

12.3.3 Implementation Plan

The implementation schedule poses no adverse impacts on the utility's ability to comply with the specified time.

12.3.4 Alternatives

The following alternative actions are presented for consideration:

Divide the containment isolation function among a number of isolation subsystems, each of which controls the valves in a relatively small number of systems and each of which has its own individual reset capacity (e.g., reset of CI group A does not affect groups B, C, ...). BWRs typically have a relatively large number of isolation groups. With this design feature, the containment isolation signal for selected groups of valves or systems can be reset, allowing these systems to be restored to operation while other systems are not reset and are maintained in an isolated status (e.g., the CVCS). This alternative may require a complete redesign of the automatic actuation logic which supports the containment isolation function.

Modify the control circuit for the letdown line isolation valve outside containment (Valve 4, see Figures 12-1 and 12-4) so it is equivalent

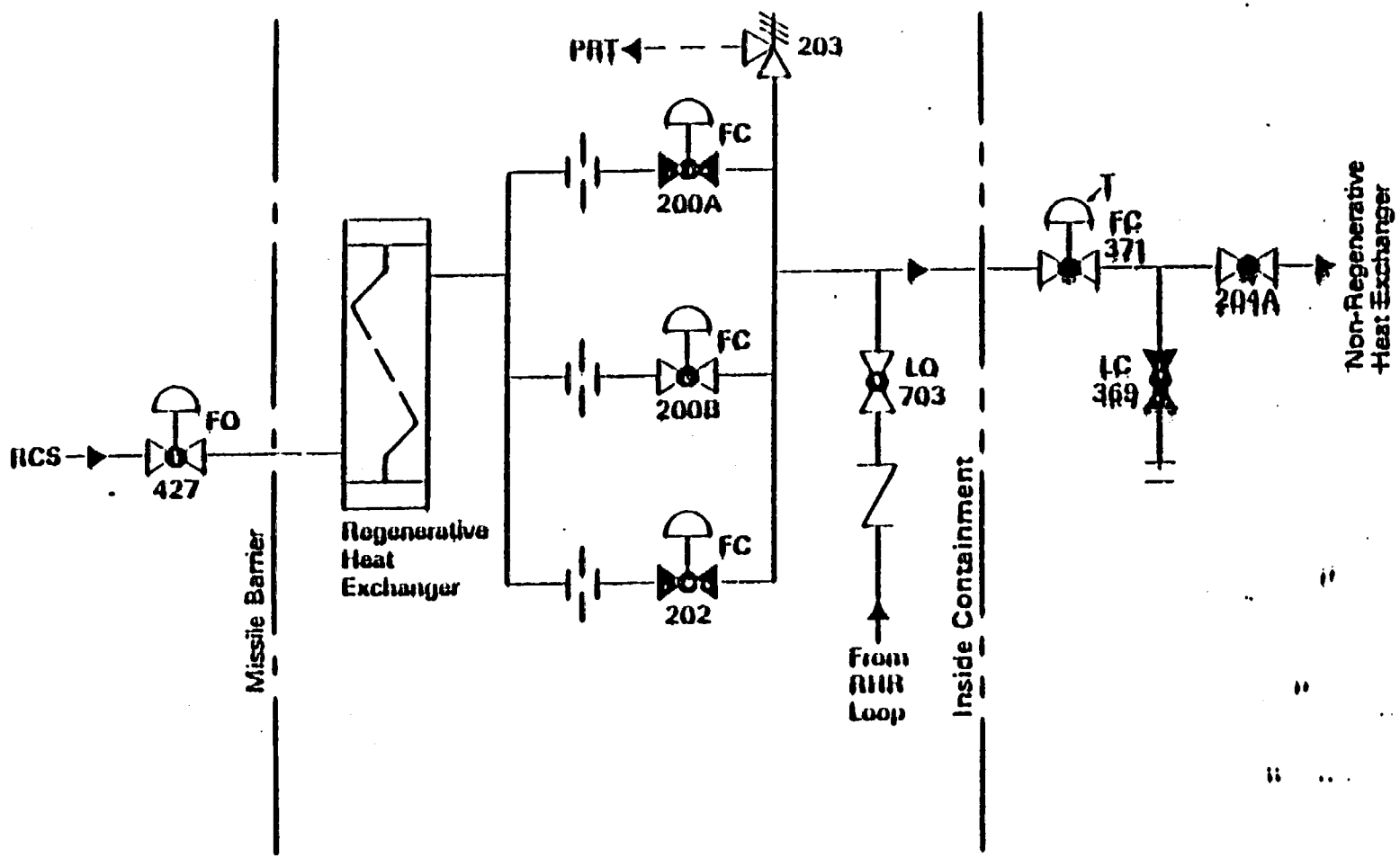

Figure 12-1 Diagram of Ginna Letdown Line Isolation and Relief Valves (From NUREG-0909)

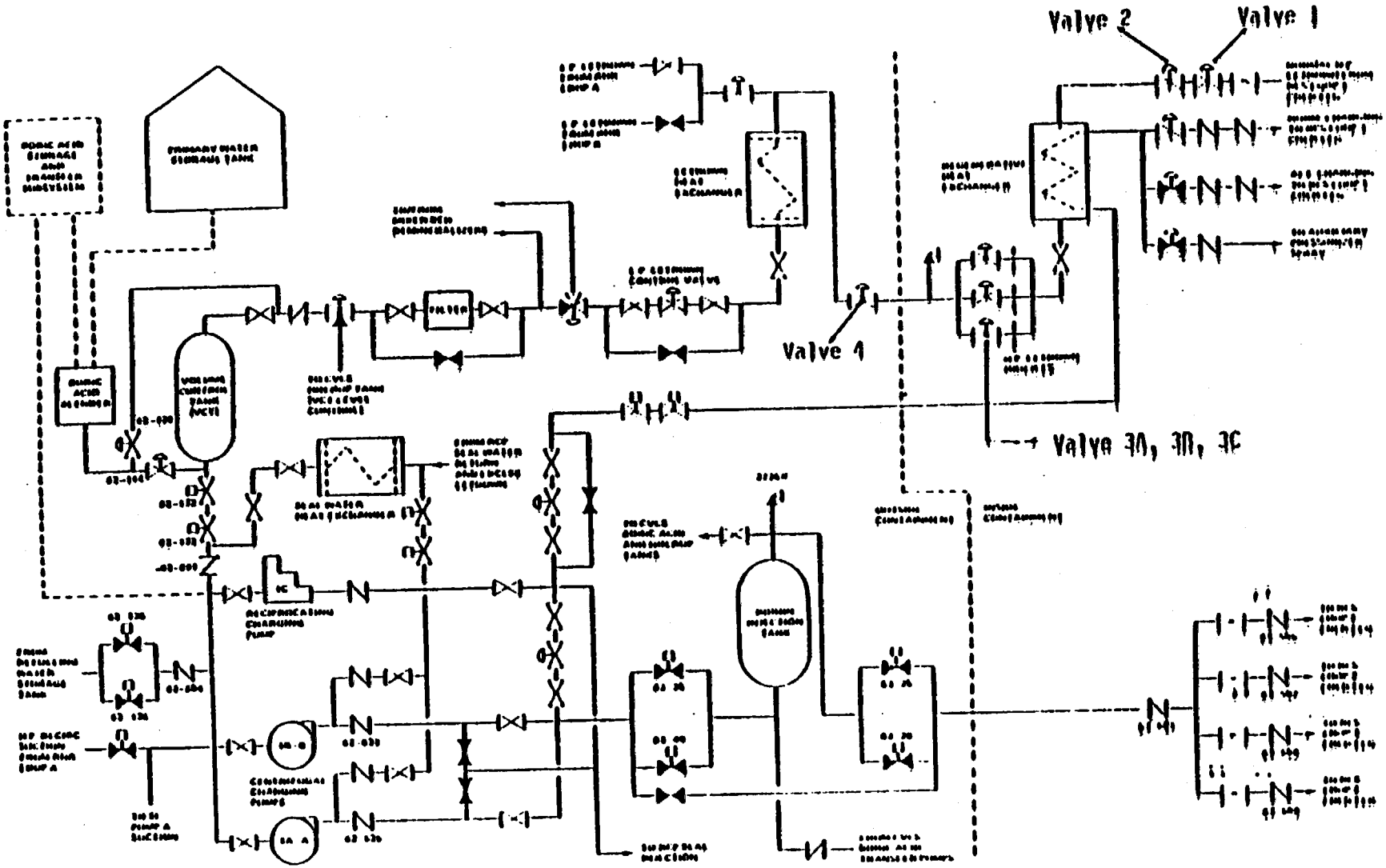

Figure 12-2 Sequoyah Chemical and Volume Control System

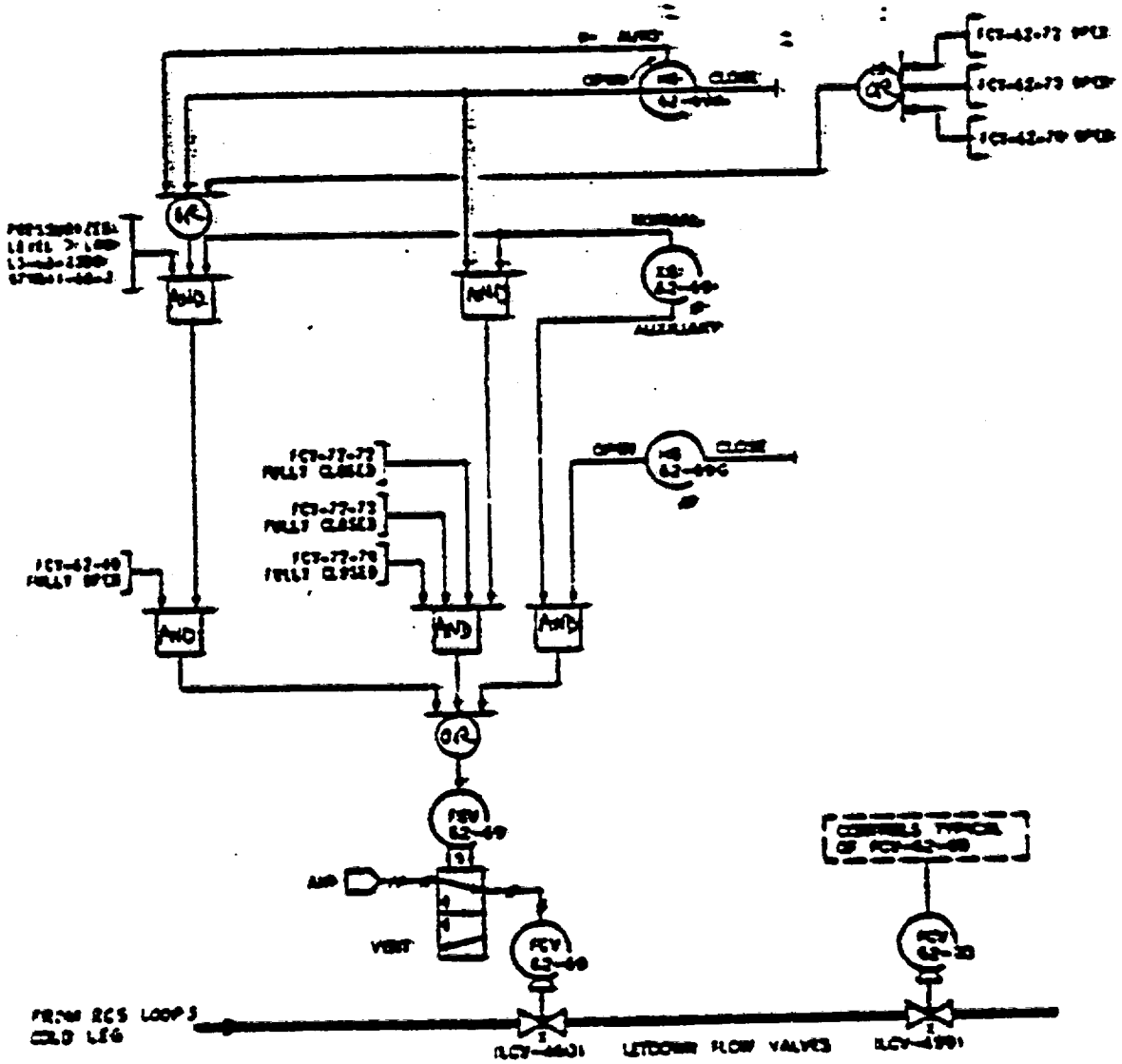

Figure 12-3 Control Circuit for Letdown Flow Control Valves (Valves #1 and #2)

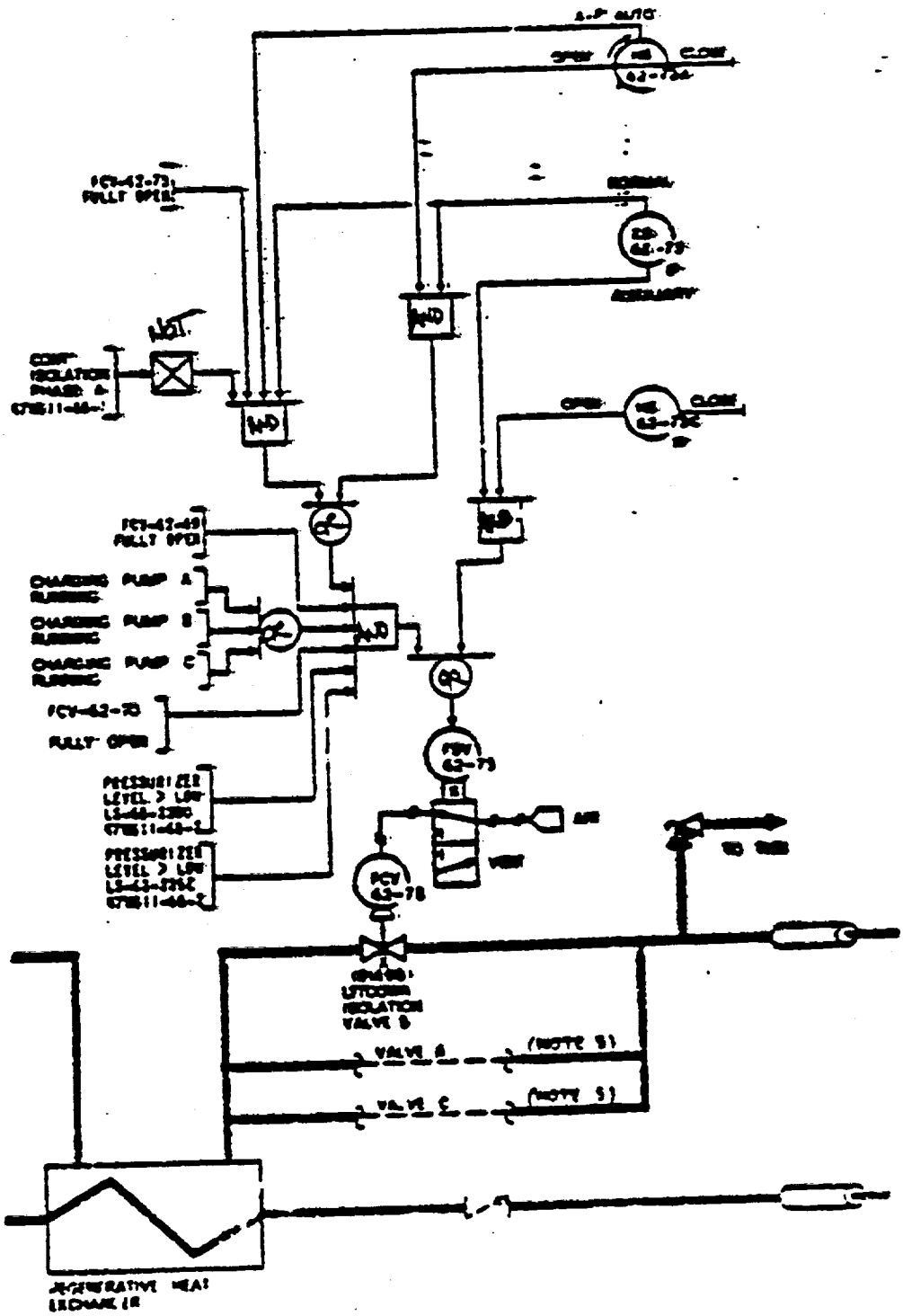

Figure 12-4 Control Circuit for Letdown Orifice Isolation Valves (Valves #3A, #3B and #3C)

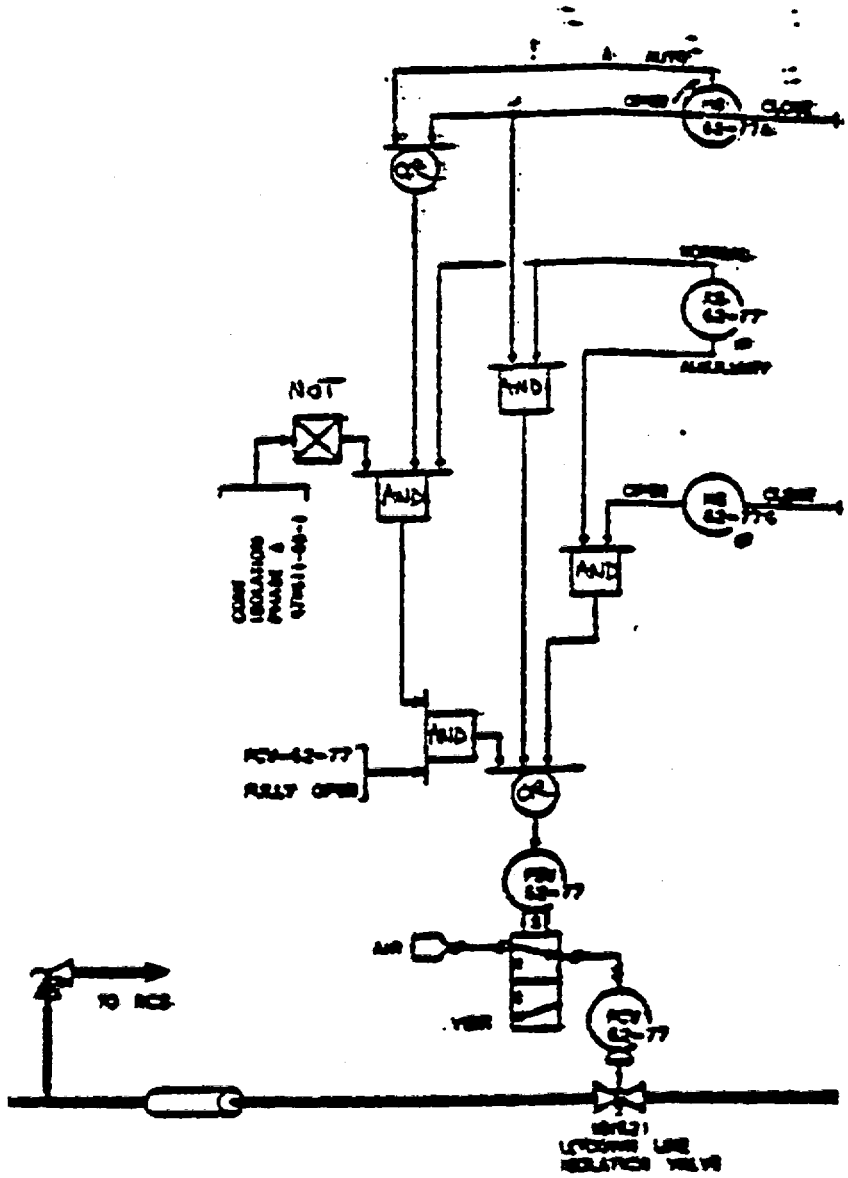

Figure 12-5 Control Circuit for Letdown Isolation Valve Outside Containment (Valve #4)

to the control circuit for the orifice isolation valves (Valves 3A, 3B and 3C, see Figures 12-1 and 12-3). Both would receive a containment isolation signal and would close when required. Following CI reset, both could open automatically when pressurizer level is restored, and normal letdown flow would resume. The low-pressure portion of the CVCS should not be overpressurized.

Add pressure switches downstream of the letdown orifices and interface these switches with the control circuits for the orifice isolation valves (Valves 3A, 3B and 3C, see Figures 12-1 and 12-3) so that these valves will close automatically when letdown line pressure exceeds a specified setpoint (e.g., less than letdown line safety valve setpoint). The control circuit should be further modified to require a manual reset following a valve closure on high downstream pressure to preclude cycling of the isolation valves (e.g., open/closed/open...).

Revise operating procedures to require that the orifice isolation valve controls be placed in the closed position before resetting CI. This action by the operator would prevent the orifice isolation valves from reopening when CI is reset.

12.4 REFERENCES

1. T. Ippolito (NRC) to G. C. Lainas (NRC), "Forthcoming Meeting with Steam Generator Owners Group - Proposed Steam Generator Generic Requirements", July 22, 1982.

2. RESAR 3S, Reference Safety Analysis Report, Westinghouse Nuclear Energy Systems.

3. WASH-1400, "Reactor Safety Study", U. S. Nuclear Regulatory Commission, October 1975.

4. NUREG-0909, "NRC Report on the January 25, 1982 Steam Generator Tube Rupture at R. E. Ginna Nuclear Power Plant", U. S. Nuclear Regulatory Commission, April 1982.

5. NUREG-0916, "Safety Evaluation Report Related to the Restart of the R. E. Ginna Nuclear Power Plant", U. S. Nuclear Regulatory Commission, May 1982.

6. Sequoyah Nuclear Plant Final Safety Analysis Report, Dockets 50-327 and 50-328.

7. Personal communication D. Anderson, Hittman Associates, September 1982.

SECTION V. ECONOMIC BENEFITS OF REQUIREMENTS IN COMBINATION

The purpose of this section is to examine the economic benefits of various combinations of the preventive-type requirements. This is appropriate since it is intended that all or several of the requirements be implemented and because the value of several requirements in combination is not readily apparent from analyses of the individual requirements as described in Section IV. This is because the absolute "performance" of a requirement is not independent of others with which it may be operating, even though the relative performance may be independent, or nearly so.

All of the economic benefits of interest here are in the nature of avoided costs associated with reductions in the frequencies of leaks and ruptures and in the rate of plugging tubes. Baseline frequencies were provided in Section III.2 and frequency and plugging rate "reduction factors" were estimated in the individual analyses of Section IV. The reduction factors are particularly useful for analyzing combinations of requirements in those cases where the benefits are directly proportional to the change in frequency or plugging rate. To illustrate, let r be a reduction factor, which is defined by $f_{new} = r\, f_{baseline}$, where f_{new} and $f_{baseline}$ are respectively event frequencies after and before implementation of a requirement. The change in frequency is $f_{baseline} - f_{new} = f_{baseline}(1-r) = f$. If C is the cost per event (e.g., a leak), the avoided cost or benefit is $(\Delta f)C = (\Delta f/f_{baseline}) \cdot f_{baseline}\, C = (1-r)f_{baseline}\, C$.

If two requirements are implemented with frequency reduction factors r_1 and r_2, the new frequency is $f_{new} = r_1 r_2 f_{baseline}$. This follows from the definition of the reduction factor, but it implies an assumption that the requirements operate independently, i.e., the reduction factors are multiplicative and independent. This assumption, which greatly facilitates the analysis, is taken to be acceptable in the sense that most exceptions to it would be masked by the uncertainties, which are relatively large. We do acknowledge one specific exception, namely that the effectiveness of improved ECT techniques is likely to be sensitive to the state of secondary water chemistry in a plant. We accommodate this exception by using a range for the estimated frequency reduction factor for improved ECT; this range thus reflects plant-to-plant variations rather than uncertainty, which generally is not displayed explicitly.

With two requirements, the relative change in frequency becomes $\Delta/f_{baseline} = 1-r_1r_2$; this can obviously be generalized to more requirements so long as the assumption of independence is not too severely violated. Also, tube plugging rates can be treated in an analogous manner.

In practice, the problem is considerably more complicated because it is necessary to keep track of the individual degradation mode frequencies and to combine them according to which requirements operate on which modes. Nevertheless, it is conceptually identical to the simple illustration described above.

To facilitate the presentation of results, we represent the preventive requirements by the letters A, B, C, D, E and F as follows:

A	Loose Parts QA (LP-QA)
B	Loose Parts Monitor System (LPMS)
C	Secondary Water Chemistry Program, including Condenser ISI (SWCP)
D	Steam generator tube - inservice inspection (SG-ISI)
E	Improved ECT (Imp. ECT)
F	Upper inspection ports (UIP)

The notation ABC denotes the situation in which A, B, and C are all three in effect. AB/C refers to the effect of implementing A and B, given that C has already been implemented; it is referred to as the marginal effect of A and B, given C. Generalizations such as AB/CD have their obvious meaning. Also, letting b(A) denote the benefit, or avoided cost, associated with A, we can show

$$b(A/B) = b(AB) - b(B)$$

which is useful for computing marginal benefits.

For forced outages due to leaks and ruptures, the relative changes in frequency are displayed, for each of the PWR vendors and for the entire PWR population, for the individual requirements (for easy reference) and for a selected set of requirement combinations in Table V-1. For any given combination, the variation among vendors arises from the fact that shutdowns

Table V-I Relative Reduction in Outage Frequency and Annual Cost by Selected Combinations of Requirements

Combinations of Requirements	NSSS Vendor			
	Westinghouse	Combustion Engr.	Babcock & Wilcox	All PWRs
A (LP-QA)	20%	6.3%	4.0%	13%
B (LPMS)	16%	4.9%	3.1%	8.2%
C (SWCP*)	41%	46%	17%	32%
D (SG-ISI)	18%	20%	20%	18%
E (Imp. ECT)	0-23%	0-25%	0-25%	0-23%
F (UIP)	0.2%	0.1%	0.1%	0.1%
ABCDEF	64% - 72%	60% - 70%	36% - 52%	53% - 64%
ABDEF/C	23% - 31%	14% - 24%	18% - 35%	21% - 32%
ABC	46%	46%	17%	40%
AB/C	5.1%	--	--	7.6%
AB	22%	6.8%	4.3%	14%
B/A	1.6%	0.5%	0.3%	1.2%
ACDE	63% - 71%	60% - 70%	36% - 52%	52% - 64%
Baseline Outage Frequency $(Rx\text{-}yr)^{-1}$	0.165	0.071	0.455	0.188

*including Condenser ISI.

in the different types of plants have been attributed to different degradation mode distributions and because the requirements do not affect all modes equally. The industry-wide averages (all PWRs) are dominated by Westinghouse plants but the others have a significance influence.

Focusing on the industry-wide averages, these results suggest that all the requirements together (ABCDEF) would reduce shutdown frequency by about 53% – 64% (significantly more in Westinghouse plants). Addition of the individual reductions would suggest a total of about 71% - 94%, which is about 50% too high. Since the effects of the requirements are not additive, it is necessary to examine the marginal effects to determine the relative importance of different requirements.

The secondary water chemistry program (SWCP), here denoted by C and taken to include the condenser ISI program, provides the greatest reduction in shutdown frequency of any single requirement, about 32%. All of the other requirements together (ABDEF/C) contribute an additional 21% - 32%, i.e., up to about half the total for all requirements.

The three preventive requirements, ABC, as opposed to preventive-diagnostic, requirements, DEF, would yield an industry-wide reduction in steam generator-related shutdown frequency of about 40%. Again, C is the major contributor to this, with AB/C contributing only about 8%. Carrying this a step further, AB provides about 14% reduction with B/A contributing only about 1% of this. This is well within the range of uncertainty and is therefore hardly significant. Moreover as indicated in Section IV, the marginal cost of B/A is probably large enough to make the net marginal benefit of B/A negative. From this point of view, the requirement A should be preferable to the combination AB.

From the entries in Table V.1, Upper Inspection Ports (F) do not appear to offer hope of much benefit, alone or in combination. Omitting F and B, the remaining requirements ACDE might lead to a frequency reduction by 52% - 64%. For all practical purposes, this is indistinguishable from the potential reduction of all six of the requirements.

Since avoided costs of outages are proportional to the reductions in frequency, the reductions in Table V.1 apply also to these costs. The

actual value (in dollars) of the avoided costs are also proportional to the baseline frequencies, which differ among vendors. For reference, the baseline frequencies, from Section III.2, are included in Table V.1.

Table V.2 provides the expected reductions in tube rupture and tube plugging rate for the same combinations of requirements included in the earlier table for forced outages. With regard to tube ruptures, since there have been none for CE or B&W reactors, the reduction factors are derived exclusively from Westinghouse plant data (4 tube ruptures!). We also use the factors for industry-wide averages by adjusting the baseline frequency to the total number of years of reactor operation for all types of PWRs. These frequencies are provided in footnotes to the table. Application of these factors to CE or B&W reactors alone would be entirely speculative.

The contributions of ruptures to forced shutdowns have already been included in the shutdown frequencies discussed earlier. The rupture frequencies themselves are of interest as accident initiator frequencies and, from an economic viewpoint, determine the expected values of the cost of accident decontamination and cleanup. Although these costs are expected to be negligible compared to other economic values and impacts, the reduction factors are of some intrinsic interest from the perspective of public risk, to which they also apply.

It is obvious from the table that, with respect to tube ruptures, requirements A and B are much more important relative to C than they were in the case of forced outages. This is directly attributable to the fact that 2 of the 4 historical tube ruptures have been caused by loose parts, the target of requirements A and B. However, the marginal benefit of B/A is again quite small, about 4% of the total of 49% for A and B together. It may also be of interest that the value of AB alone is identical to the marginal value of AB given C. This is so because the degradation modes affected by AB are mutually exclusive of those affected by C.

Again, it may be noted that the combination ACDE has virtually the same value as the complete set ABCDEF.

As indicated in the table, the preventive-diagnostic requirements D, E and F are assumed to have no effect on plugging rates. In principle,

Table V.2 Relative Reductions in Rupture Frequency and Plugging Rate by Combinations of Requirements

Combinations of Requirements	% Reduction in Rupture Frequency (Westinghouse and All PWRs)**	% Reduction in Plugging Rate (All PWRs)***
A (LP-QA)	45%	--
B (LPMS)	35%	--
C (SWCP*)	23%	70%
D (SG-ISI)	5%	N.A.
E (Imp ECT)	0 - 13%	N.A.
F (UIP)	--	N.A.
ABCDEF	74% - 80%	70%
ABDEF/C	51% - 57%	--
ABC	72%	70%
AB/C	49%	--
AB	49%	--
B/A	4%	--
ACDE	73% - 79%	70%

*Including Condenser ISI program.
**Baseline frequencies: Westinghouse 0.022/Rx-yr; All PWRs 0.015/Rx-yr.
***Baseline Plugging Rates: Median 0.5% per year; Severe 2.0% per year.

A, B and C could all affect plugging rates, but the historical data suggest that A and B would not simply because no tube pluggings have been attributed to loose parts. Thus, the Secondary Water Chemistry Program (C), including the Condenser ISI program, is the only requirement affecting the plugging rate. This means that C is the only requirement with a significant potential for extending steam generator lifetime. It has been estimated that a chemistry program would reduce the plugging rate by about 70%. This is clearly a major reduction but appears to be reasonable, at least for plants in the "severe" category as discussed in Section IV.5. There is considerable uncertainty in this reduction factor, of course, especially in operating plants where degradation trends might not be reversible.

The avoided costs of interest include those associated with forced outages, which are proportional to the reduction in forced shutdown frequency; accident cleanup, which are proportional to the reduction in rupture frequency; tube plugging, which are proportional to the reduction in tube plugging rate; steam generator replacement, which are functions of the reduction in tube plugging rate.

Forced outage costs are due mainly to replacement power costs. A range of costs is used in this section to reflect the variation with outage duration, which varies from 2-14 days for leaks to 30-90 days for ruptures. In all cases, the exected values of accident cleanup costs are negligible because the probabilities of accidents are very small. Avoided tube plugging costs are based on a plugging cost per tube ($1600) and are assumed to be incurred every year except for the first two years of steam generator life. The tube plugging and steam generator replacement model used here is similar to that described in Section III.2, except that no derating is tolerated and replacement occurs when 20% of the tubes have been plugged.

For the individual requirements and for the combinations under examination, a summary of the total avoided costs are presented in Table V.3. These benefits are stated on an annual basis and in Present Worth terms for the cumulative benefits over the remaining plant life; the latter are shown for two cases, when the "present" is at the 6th year of plant life and when it is at the beginning of plant life (BOL). The benefits are always shown as a range of values which includes a component associated with the variation in outage durations for leaks and ruptures. For those

Table V_3 Summary of Avoided Costs - Industry-Wide Ranges Per Plant

Requirements	Avoided Annual Cost ($\$10^3$)	Present Worth of Avoided Cumulative Cost: At 6th yr of life ($\$10^6$)	Present Worth of Avoided Cumulative Cost: At BOL ($\$10^6$)
A (LP-QA)	54 - 284	1.1 - 5.5	1.3 - 6.6
B (LPMS)	35 - 187	0.7 - 3.6	0.8 - 4.3
C (SWCP) (Median)	156 - 746	3.1 - 14.6	3.6 - 17.3
+Cond ISI (Severe)	3200 - 15000 (24 yrs)	51 - 235	160 - 164
(Severe)	8400 - 9000 (30 yrs)		
D (SG - ISI)	79 - 414	1.5 - 8.1	1.8 - 9.6
E (Imp. ECT)	0 - 521	0 - 10.2	0 - 12.1
F (UIP)	0.4 - 2.3	0.008 - 0.045	0.010 - 0.053
ABCDEF (Median)	286 - 1500	10 - 50	11 - 59
(Severe)	3500 - 17000 (24 yrs)	57 - 270	157 - 205
(Severe)	8600 - 9300 (30 yrs)		
ABDEF/C	91 - 728	1.8 - 14.2	2.1 - 16.9
ABC (Median)	277 - 957	8.0 - 23.0	10.0 - 27.0
(Severe)	3400 - 15000 (24 yrs)	54 - 242	155 - 171
(Severe)	8600 - 9300 (30 yrs)		
AB/C	33 - 173	0.6 - 3.4	0.8 - 4.0
AB	59 - 312	1.2 - 6.1	1.4 - 7.2
B/A	5.2 - 27.3	0.10 - 0.53	0.12 - 0.63
ACDE (Median)	282 - 1503	5.5 - 29.3	6.4 - 34.0
(Severe)	3500 - 15700 (24 yrs)	56 - 252	153 - 175
(Severe)	8600 - 9900 (30 yrs)		

combinations including requirement E, an additional increment is included to reflect the assumed range in values of the frequency reduction factor for improved ECT. In general, the middle of the range would be a reasonable choice for a realistic point value. As discussed later, an additional increment is included in the avoided cost of steam-generator replacement for the 24 year remaining life case.

The ranges in benefits generally reflect variations from plant to plant. The ranges are so broad that any uncertainty in characterizing a particular plant, although large, would probably be masked.

For all cases except those labeled "severe," the benefits are dominated by the avoided costs associated with forced outages. In these cases, steam generators would not need replacement or the replacement would not be avoided or delayed because of the particular set of requirements. The relative benefits of these requirement combinations would be basically the same as for the forced shutdown frequency reductions discussed earlier. For the set of requirements ACDE, annual benefits could range up to about $1.5 million per plant. The corresponding present worth of cumulative benefits would be about $30-34 million for a young or a new plant.

For the cases labeled "severe," all of which include requirement C, the tube plugging rate is taken to be 2% per year. With the simple replacement model at hand, the steam generators would be replaced after the 12th year of plant life (either 6 or 12 years from the "present"). The dominant benefits by far are associated with avoiding or delaying steam generator replacement. For plants at the beginning of life, a reduction of the plugging rate by the estimated 70% would extend the steam generator life to beyond the plant life. The benefit would be in avoiding steam generator replacement 12 years hence, about $146 million in present worth terms. If a plant were in its sixth year, the present model would predict an extension of steam generator life by 20 years, to about the 26th year of plant life. The savings brought about by the delay would be about $47 million in present worth. It might be argued, however, that a plant would not replace steam generators with only four years remaining of plant life. If the replacement were not made, the avoided cost of replacement 6 years hence would be about $220 million in present worth. The total benefit would be this amount less the present worth value of replacement power purchased in the last years of

plant life. Because of the variability of this situation, we have represented the benefits by the range $47-$220 million.

It might also be argued that the present model is not realistic because a plant in its sixth year with tubes being plugged at 2% per year could be in an irreversible degradation trend. Replacement of the generators might be inevitable about 6 years or so hence. However, if no action at all were taken, a second replacement would likely be needed about 10 years later (much earlier for plants with plugging rates up to 4%). If the chemistry program were implemented, it seems quite likely that at least one steam generator replacement could be avoided at some point in the plant's remaining life. The present worth value would be somewhat sensitive to the time of the avoidance, but it would be on the order of several $100 million, provided the 70% reduction in plugging rate can be achieved. If the reduction amounts to only 50% in a plant with 2% plugging, the benefits associated with delayed replacement would be on the order of several $10 million in present worth at beginning of life. This would be true of plants with plugging rates above about 2.5% even with the 70% reduction factor.

Finally, a summary of avoided costs for the set of requirements ACDE is shown for the three PWR vendors in Table V.4.

Table V-4 Summary of Avoided Cost for Requirement Combination ACDE*

Vendor	Avoided Annual Cost (10^3)	Present Worth of Avoided Cumulative Cost: At 6th yr of life (10^6)	Present Worth of Avoided Cumulative Cost: At EOL (10^6)
Westinghouse (Median)	294 - 1474	6 - 29	7 - 34
(Severe)	3500 - 15600 (24 years) 8600 - 9800 (30 years)	56 - 252	166 - 184
Combustion Engineering	153 - 466	3 - 9	4 - 11
Babcock & Wilcox	428 - 2005	8 - 39	10 - 46
All PWRs (Median)	282 - 1503	6 - 29	6 - 35
(Severe)	3500 - 15700 (24 years) 8600 - 9900 (30 year)	56 - 252	166 - 184

*ACDE: Loose Parts QA, Secondary Water Chemistry Program, including condenser ISI, Tube ISI, Improved ECT.

SECTION VI. CONCLUSIONS AND OBSERVATIONS

This section collates the conclusions reached in each of the individual requirement value-impact assessments in Section IV with the conclusions arising from the marginal analysis of Section V. Additionally, several observations concerning the value-impact analysis process, the writing of requirements, and other study-related topics which were deemed important are discussed.

1.0 SUMMARY OF CONCLUSIONS

Table VI-1 presents a summary of the quantified values and impacts on public risk, costs, and occupational exposures as exerpted from the individual requirements value-impact analyses. Table VI-2 presents a summary of the occupational exposures and compares the annual dose rates to the average occupational exposure at a PWR. Note that the other five requirements dealt with specification limits and plant system studies which had very small values and/or impacts relative to the seven "preventative" requirements listed on Table VI-1.

1.0.1 "Effectiveness"

The above division, or initial ranking, into two groups allowed the marginal analysis to focus on the seven requirements with the greatest value-impact numbers. Table VI-3 presents the percentage reduction in outage frequency for six of these seven requirements. The stabilization of tubes was omitted since it was study oriented. Using these percentages as an "effectiveness" ranking yields the following order, from most to least "effective".

- Secondary water chemistry program, including condenser inservice inspection.
- Steam generator inservice inspection
- Loose parts quality assurance program
- Improved eddy current testing
- Loose parts monitoring system
- Upper inspection port.

Table VI-1 Summary of Life-Time Economic and Radiologic Results Per PWR

Requirments	ECONOMIC: Cost to Implement (10^6)	Avoided Costs (10^6)	Avoided Accident Cleanup Costs (10^3)	Net Benefit (10^6)	RADIOLOGIC: Exposure to Implement (Man-Rem)	Occupational Exposure Avoided (Man-Rem)	Public Exposure Avoided (Man-Rem)	Net Benefit (Man-Rem)
1) Sec. ISI + QA	.2	2.7	7	2.5	275-675	87-165	32	(153-475)
SEC ISI + QA + LPMS	.5-1	3.2	.1	2.2-2.7	175-470	94-180	2.4	(174)-5
2) ISI								
a) full length	.1-.2	4.3		4.1-4.2	40-300	7.2		(33-293)
b) 48 mo./subset	-	-			negl.	negl.		negl.
c) Supp. Sampling	.2	1.3-5.6	negl.	1.1-5.4	negl.	30-150	negl.	30-150
d) Denting Monitoring	.3-1	.7-1.4	.1	.4	24	20-40		(4) - 16
e) Unscheduled ISI	5	N.E.*	-	-	10-50	N.E.*	1	(10-50)
f) Reporting	-	-	-	-	-	-		-
3) Eddy Current Testing	.1	0-5.6	1	0-5.5	0	0-140	6	6-146
4) Upper Inspection Ports								
a) Under Fabrication	.1	negl.	negl.	negl.	negl.	negl.	negl.	negl.
b) In-place	1	negl.	negl.	(1)	0-300	negl.	negl.	(0-300)
5)&6)Secondary Water Chem. including Condenser ISI	1.3	40-240	1-16	40-240	0	1000-7500	2-20	
7) Tube Stabilization - Implementation phase: W/BW/CE	1 2.5/0.4/0.9	N.A. 2.1/5.9/0	N.A. N.E.*	N.A. (.4)/5.5/(.9)	N.A. 806-1023	N.A. 40-160	N.A. N.E.*	N.A. (760-860)
8) Primary to Sec. Leakage	1.3	1.4	N.A.	.1	0	20	negl.	>20
9) Iodine Coolant Limits	.4	N.A.	negl.	(.4)	0	N.A.	negl.	0
10)Reactor Coolant Systems	.1	N.A.	negl.	(.1)	0	N.A.	negl.	0
11)Safety Injection Signal Reset	.1	N.A.	negl.	(.1)	0	N.A.	negl.	0
12)Containment Isolation	.2	-	10	(.2)	0	negl.	negl.	0

*NE, not estimated

Table VI-2. Cumulative Occupational Exposure Per PWR Life-Time (man-rem).

	Implementation	Avoided	Net
SWCP	0	1000-7500	1000-7500
LP-QA and Secondary ISI	275-675	80 -145	(585)-(110)
ISI	60-325	50-200	(275)-120
ECT	0	0-140	0-140
Total	335-1000	1140-8005 -5905*	140-7600 -5500*
o Annual Rate as a Percentage of 1979 Average PWR Occupational Exposure	3%-8%	9%-65% -48%*	1%-63% -45%*
o Percentage with Marginal Interactions Among Requirements	2%-5%	6%-43% -32%*	1%-42% -33%*

* Without Steam Generator Replacement

Table VI-3. Relative Reduction in Outage Frequency ("Effectiveness") by Selected Combinations of Requirements.

Individual Requirements	NSSS Vendor: Westinghouse	Combustion Engr.	Babcock & Wilcox	All PWRs
A (LP-QA)	20%	6.3%	4.0%	13%
B (LPMS)	16%	4.9%	3.1%	8.2%
C (SWCP*)	41%	46%	17%	32%
D (SG-ISI)	18%	20%	20%	18%
E (Imp. ECT)	0-23%	0-25%	0-25%	0-23%
F (UIP)	0.2%	0.1%	0.1%	0.1%
Combinations of Requirements				
ABCDEF	64% - 72%	60% - 70%	36% - 52%	53% - 64%
ABC	46%	46%	17%	40%
AB	22%	6.8%	4.3%	14%
ACDE	63% - 71%	60% - 70%	36% - 52%	52% - 64%

* Including Condenser ISI.

Note that in Table VI-3 under the combinations of requirements portion that the last two requirements have very little impact when implemented with the first four. This marginal analysis indicates that LPMS and UIP yeild practically no reduction in probability of outages if the other four requirements are implemented.

It is also seen in Tables VI-1 and VI-3 that the secondary water chemistry program has both the greatest net values (costs and radiation exposure, plus public risk reduction) and the highest percentage "effectiveness."

1.0.2 Public Risk

The network risk analysis of Section III.5 indicates that the public risk consequence due to SGTR as the source event are minimal before any requirement is implemented. The consequence probabilities from SGTR were: melt-down, 10^{-7}; major radiation release, 10^{-7}; and minor radiation release, 10^{-3}.

As an 'a priori' result, the reduction in public risk was not significant for any of the requirements. This lack of public risk for SGTR events is particularly important for those requirements whose principal justification for drafting was safety or risk reduction related. The five requirements primarily concerned with a safety or risk justification are:

- Primary to secondary leakage limits
- Coolant iodine activity limits
- Reactor coolant system pressure
- Safety injection signal reset
- Containment isolation and reset.

All of these five requirements were found to have very marginal values or that the impacts outweighed the values. As discussed above, this was expected since little risk reduction value was able to be attached simply because of the low risk at present.

I.0.3 Individual Requirement Assessment Summaries

Each of the twelve requirements is addressed below in terms of its "bottom-line" value-impact assessment. Also included are significant facts, features, and comments arising from the assessment. The requirements are also presented in ranked order from greatest value to least.

Secondary Water Chemistry Program: The values greatly exceed its impacts.

- The cost benefits are much greater than the cost impacts e.g., for the average unit: $1.3 million versus $40 million.
- The avoided occupational dose is very significant; the average unit avoids 40 man-rem per year.
- Marginal benefit is very good; SWCP benefit is equal to that of all other requirements combined.
- Wide unit-to-unit variability in extent of value.

Prevention and Detection of Loose Parts: Excellent values relative to impacts for the quality-assurance and visual inspection portion; negative marginal value-impact for installation of the loose parts monitoring system.

- QA and inspection have expected benefits more than 10 times the implementation cost.
- QA and inspection may have a larger occupational dose to implement than expected dose savings.
- Installation of LPMS for monitoring only secondary side has a negative marginal cost benefit, but does reduce occupational exposure.
- Use of an existing primary side LPMS that can easily accomodate use on the secondary side has approximately the same net benefit as QA and inspection, plus occupational exposure is reduced (34 PWRs have primary side LPMS).

Steam Generator Inservice Inspection: Excellent values relative to impacts.

- Full length inspection shows positive value-impact with only a 1% assumed reduction in future forced outages; the estimated forced outage reduction factor is a few percent, perhaps as high as 10%.

- Monitoring the amount of denting and establishing denting limits has a more modest, but still favorable, value-impact.

- Going to the 48 month maximum between ISI may require 5% of SG population to be inspected before reaching full period; requirement should consider allowing inspection at next refueling.

Improved Eddy Current Techniques: Values significantly exceed impacts.

- Net benefits good even for only a 2% reduction in forced shutdown for repair of leakage; up to a 20% reduction is expected.

- Improved ECT of plants identified as having "severe" SG degradation would detect more of the existing incipient flaws in the SG; timely implementation will have immediate benefits.

- There are no occupational dose impacts to implement but a few man-rem per year are avoided for an "average" plant.

Condenser Inservice Inspection Program: Values inherent in secondary water chemistry requirement.

- A majority of SWC-related degradation sources originate in the condenser.

- No effective SWCP is possible without CISI and, thus, the CISIP should be explicitly or implicitly included in the SWCP.

- CISI testing costs are small; $5-25K depending on type and extent of test.

of test.

Upper Inspection Ports: Impacts exceed the values.

- Installation of UIP in an existing SG is 30-40 times the cost of one installed in a SG being fabricated, plus having a 100 man-rem dose.

- Life-time probability of UIP preventing forced outage or SGTR is negligible.

- Alternatives to UIP diagnostics are or will be available (fiber optics, improved ECT).

Stabilization and Monitoring of Plugged Tubes: Very small impact with no values for the study; large values and impacts if implementation occurs.

- The study required has a small cost, no values and requires further NRC actions.

- Estimated cost impacts and benefits are in the millions of dollars for implementing the study, with high occupational exposures.

Primary to Secondary Leakage Limits: Values exceed impacts, but both small.

- Plants presently operating without this STS and above its limits would experience a $.1M benefit and a 20 man-rem benefit due to avoided SGTRs.

- Reduction of public risk is negligible.

Coolant Iodine Activity Limits: Values do not exceed impacts, but impacts are small.

- Potential for large impact exists if plant is above new limits when this requirement is implemented; impact would be similar to an unscheduled refueling. Units to be affected were surveyed and are within limits presently.

- Reduction in public risk is negligible.

Reactor Coolant System Pressure Control: Small impact exceeds value.

- Value of public risk reduction is negligible.

- Small implementation costs and no doses associated with this study.

- RCS pressure control could have values (undetermined) for non-SGTR initiated accidents.

Safety Injection Signal Reset: small impacts outweigh no quantifiable values.

- Negligible reduction in public risk..

- Small implementation costs with negligible ORE.

- Possible benefits in other than SGTR accidents (undetermined).

Containment Isolation and Reset: Small impacts greater than small values.

- Expected reduction in clean-up costs less than implementation costs.

- No effect on public risk.

- Insignificant ORE saving achieved.

- Potentially beneficial side effects for other accident sequences (undetermined).

2.0 OBSERVATIONS

This subsection presents "lessons learned" and other study-related comments and observations.

2.0.1 Requirement Definitions

Four types of actions appear to have been proposed. These are listed below in order of their effectiveness in producing benefits:

- o preventive actions,
- o diagnostic/preventive actions,
- o mitigative actions, and
- o study-type actions.

The ordering above is intuitive, but the ordering has really been corroborated by this value-impact study. A "preventive" action is one such as improved secondary water chemistry program whose implementation has direct potential for producing benefit. "Diagnostic/preventative" actions are those such as improved ECT or ISI where benefits are contingent upon valid diagnosis of an incipient flaw <u>and</u> an appropriate "fix" of the diagnosed problem.

"Mitigative" actions, such as CI or SI resets, only lessen the effects of accidents once they occur, and severe accidents resulting from steam generator problems are sufficiently rare that the benefits of mitigation are small. Furthermore, as preventive actions become more effective, the benefits of mitigative actions are even further lessened (see Section V). "Study" type actions are the least beneficial because any benefits are dependent on the following three conditions:

- o There is a "discoverable" beneficial program to which the study can lead;
- o The study leads to such a beneficial program in a valid manner; and
- o The beneficial program is successfully implemented.

An increase in knowledge is highly probable with any study, but it has no benefit if it is not utilized. The likelihood of initiating a valid study which leads to an appropriately implemented beneficial program appears small.

2.0.2 Specific Observations

The following specific observations were made as a result of the value-impact analysis:

- The requirement on iodine limits has a "catch-22" in the analysis of its value-impact. While it has negligible value for safety and public risk reduction, it is being required because of 10 CFR 100.

- Performing plant specific analysis to determine the limiting number of tubes for a plant and to drive a statistically based sampling plan probably is uneconomical, but such a requirement allows licensee flexibility.

- Secondary water chemistry has the largest potential for plants with chemistry related degradation. QA and secondary side inspection, improved ECT techniques and ISI requirements have benefits for all plants, including plants without much degradation.

- Prompt requirement, or adoption, of improved ECT methods by plants with greater than .7% annual tube plugging rates would increase the probability of detecting incipient flaws.

- Tube stabilization is a study requirement. Implementation of the study results would likely involve impacts and benefits estimated to be in the tens of millions dollars range. The approach of requiring each utility to perform the study may not be the preferred approach. An alternative is to require each NSSS vendor, or some other second party, to research the problem of tube degradation mechanisms and tube stabilization and monitoring.

- Requirements of a mitigative nature generally have small impacts and benefits (where they can be quantified). Some of them, (e.g., SI reset, and containment isolation) have potentially beneficial side effects (make the plant "safer" with other accidents, etc.) that may increase the value of the requirement.

- If all the requirements were implemented the occupational exposures to implement are estimated to be a 4 - 15% increase over the average 1979 occupational exposure at a PWR. The estimated avoided doses are 10 to 65% of the same.

BIBLIOGRAPHY

1. Atomic Industrial Forum, "An Assessment of Engineering Techniques for Reducting Occupational Radiation Exposure at Operating Nuclear Power Plants", February 1980.

2. Bechtel Corporation, "Steam Plant Surface Condenser Leakage Study", Electric Power Research Institute, Report NP-481, March 1977.

3. Bechtel National, Inc., "Steam Plant Surface Condenser Leakage Study Update", Electric Power Research Institute, Report NP-2062, May 1982.

4. C. Y. Cheng, "Steam Generator Tube Experience", NUREG-0886, U. S. Nuclear Regulatory Commission, February 1982.

5. M. Cohen, J. Dracup, R. C. Erdman, Science Applications, Inc., "Value-Impact Analysis", for Electric Power Research Institute, NP-1237, 1979.

6. R. G. Easterling, "Statistical Analysis of Steam Generator Inspection Plans and Eddy-Current Testing", NUREG/CR-1282, U. S. Nuclear Regulatory Commission, May 1981.

7. D. Eisenhut, B. D. Liaw and J. Stronsnider, "Summary or Operating Experience with Recirculating Steam Generators", NUREG-0523, U. S. Nuclear Regulatory Commission, January 1979.

8. A. E. Green and A. J. Bourne, Reliability Technology, Wiley-Interscience, 1972.

9. S. H. Hanauer (NRC) to NRR Division Directors (NRC), letter, "Procedures for Transmitting New Generic Requirments to the CRGR; Enclosure 2; NRR Office Letter No. 16, Revision 1, Instruction for the Preparation of Value-Impact Analyses", February 23, 1982.

10. G. R. Hoenes, M. A. Mueller, and W. D. McCormack, "Radiological Assessment of Steam Generator Removal and Replacement: Update and Revision", NUREG/CR-1595, U. S. Nuclear Regulatory Commission, December 1980.

11. T. A. Ippolito (NRC) to G. C. Lainas (NRC), Memorandum, "Forthcoming Meeting with Steam Generators Owners Group - Proposed Steam Generator Generic Requirements", July 22, 1982.

12. B. W. Johnson, "A Study of Postulated Accidents At California Nuclear Power Plants", Science Applications, Incorporated, SAI-0380-381LJ, June 1980.

13. R. C. Kryter and C. W. Ricker, Oak Ridge National Laboratory, "Characteristics and Performance Experience of Loose-Part Monitoring Systems in U. S. Commercial Power Reactors", NUREG/CR-0524, March 1979.

14. B. D. Liaw, J. Stronsnider, "Summary of Tube Integrity Operating Experience with Once-Through Steam Generators", NUREG-0571, U. S. Nuclear Regulatory Commission, March 1980.

15. W. S. Little, NRC, to C. Reed, Commonwealth Edison Co., Letter forwarding IE Inspection Reports 50-295/82-10 and 50-304/82-08, Nuclear Power Station, Units 1 and 2, June 16, 1982.

16. L. B. Marsh, "Evaluation of Steam Generator Tube Rupture Events", NUREG-0651, U. S. Nuclear Regulatory Commission, January 1979.

17. E. J. Mishan, Cost Benefit Analysis, Praeger Special Studies, New York, 1976.

18. L. R. Rice and L. J. Pollenz, Applied Decision Analysis, Inc., "PWR Steam Generator Cost Benefit Methodology", Electric Power Research Institute Report NP-2295, Palo Alto, California, 1982.

19. R. I. Smith and L. M. Polentz, Battelle Memorial Institute, Pacific Northwest Laboratory, "Technology, Safety and Costs of Decommissioning a Reference Pressurized Water Reactor Power Station", NUREG/CR-0130 Addendum, August 1979.

20. J. Strosnider, "Resolution of Unresolved Safety Issues A-3, A-4, and A-5 Regarding Steam Generator Tube Integrity, U. S. Nuclear Regulatory Commission, Draft NUREG-0844, December 1981.

21. Tennessee Valley Authority, "Sequoyah Nuclear Plant Final Safety Analysis Report", Dockets 50-327 and 50-328, (date).

22. U. S. Nuclear Regulatory Commission, "Draft Environmental Statement Related to Steam Generator Repair at Turkey Point, Units 3 and 4, Florida Power and Light Company", NUREG-0743, December 1980.

23. U. S. Nuclear Regulatory Commission, "Final Environmental Statement Related to Steam Generator Repair at Surry Power Station, Unit 1, Virginia Electric and Power Co., Docket No. 50-280, July 1980.

24. U. S. Nuclear Regulatory Commission, "Generic Assessment of Delayed Reactor Coolant Pump Trip During Small Break Loss-of-Coolant Accidents in Pressurized Water Reactors", NUREG-0623, November 1979.

25. U. S. Nuclear Regulatory Commission, "Generic Evaluation of Feedwater Transients and Small Break Loss-of-Coolant Accidents in Westinghouse Designed Operating Plants", NUREG-0611, January 1980.

26. U. S. Nuclear Regulatory Commission, "Final Environmental Statement Related to Steam Generator Repairs at Surry Power Station, Unit No. 1, Virginia Electric and Power Company", Docket No. 50-280, July 1980.

27. U. S. Nuclear Regulatory Commission, "NRC Report on the January 25, 1982 Steam Generator Tube Rupture at R. E. Ginna Nuclear Power Plant", NUREG-0909, April 1982.

28. U. S. Nuclear Regulatory Commission, "Occupational Radiation Exposure at Commercial Nuclear Power Reactors 1979 Annual Report", NUREG-0713, Vol. I, March 1981.

29. U. S. Nuclear Regulatory Commission, "Reactor Safety Study", WASH-1400, October 1975.

30. U. S. Nuclear Regulatory Commission, "Standard Technical Specifications for Babcock and Wilcox Pressurized Water Reactors", NUREG-0103, Revision 4, Fall 1980.

31. U. S. Nuclear Regulatory Commission, "Standard Technical Specifications for Combustion Engineering Pressurized Water Reactors", NUREG-0212, Revision 2, Fall 1980.

32. U. S. Nuclear Regulatory Commission, "Standard Technical Specifications for Westinghouse Pressurized Water Reactors", NUREG-0452, Revisions 3, September 1980.

33. U. S. Nuclear Regulatory Commission, Regulatory Guide 1.133, Revision 1, "Loose-Part Detection Program for the Primary System of Light-Water-Cooled Reactors", May 1981.

34. U. S. Nuclear Regulatory Commission, Regulatory Guide 1.82, "Inservice Inspection of Pressurized Water Reactor Steam Generator Tubes", Revision 1, July 1975.

35. U. S. Nuclear Regulatory Commission, "Safety Evaluation Report Related to the Restart of R. E. Ginna Nuclear Power Plant", NUREG-0916, May 1982.

36. U. S. Nuclear Regulatory Commission, "Standard Review Plan for the Review of Safety Analysis Reports for Nuclear Power Plants - LWR Edition", NUREG-75/087.

37. Westinghouse Nuclear Energy Systems, RESAR 35, Reference Safety Analysis Report.

38. G. E. Zima, G. H Lyon, and P. G. Doctor, Battelle Memorial Institute, Pacific Northwest Laboratory, "Some Aspects of Cost/Benefit Analysis for Inservice Inspection of PWR Steam Generators", NUREG/CR-1490, May 1981.

Appendix A. Steam Generator Event Data

This appendix presents data on which most of the Tables in Section III.2 are based but which are not needed directly in the analysis. All of this data was compiled from NUREG-0886, supporting tables.

Tables A.1, A.2 and A.3 present, respectively for Westinghouse, Combustion Engineering and Babcock and Wilcox plants, the numbers of events in various leak and rupture categories, the total number and percentage of tubes plugged and the number of operating years for individual plants. An aggregate summary of this data was presented in Table III.2-1. As noted in the text, a rupture is defined to be an event in which the leak rate exceeds the capacity of the charging pumps at full system pressure.

Tables A.4, A.5 and A.6 present, respectively for Westinghouse, Combustion Engineering and Babcock and Wilcox plants, the numbers of leak and ruptures, by categories, attributed to various modes of degradation. An aggregate summary of this data was presented in Table III.2-2.

Table A.1 Number of Steam Generator Events in Westinghouse Plants.

Plants	Operating Years	Number of Events (Leaks & Ruptures) LR<0.1	0.1<LR<0.3	0.3<LR<RUP	Rupture	Total	Tubes Plugged Num. (%)
Yankee-Rowe	22	11	2	2	0	15	115 (1.3)
San Onofre 1	15	5	1	1	0	7	954 (3.4)
Haddam Neck	3	1	0	0	0	1	59 (0.5)
Ginna 1	13	6	0	0	1	7	229 (3.5)
Robinson 2	12	0	3	4	0	7	1064 (11)
Point Beach 1	12	6	4	1	1	12	318 (12.5)
Point Beach 2	11	0	0	2	0	2	117 (2)
Surry 1	9*	1	2	1	0	4	2575 (25.4)
Turkey Point 3	10	3	1	0	0	4	2058 (21)
Surry 2	7*	0	1	2	1	8	2156 (21)
Indian Point 2	9	3	0	1	0	4	472 (3.51)
Turkey Point 4	9	2	3	3	0	8	2606 (24.3)
Zion 1	9	1	0	0	0	1	25 (0.4)
Prairie Island 1	9	0	0	1	1	2	34 (1)
Kewaunee	9	0	0	0	0	0	0
Zion 2	9	0	0	0	0	0	13 (0.2)
Prairie Island 2	8	0	0	2	0	2	61 (2)
Cook 1	8	0	0	0	0	0	21 (<1)
Trojan	7	4	1	0	0	5	347 (2.5)
Indian Point 3	7	0	2	1	0	3	331 (5.4)
Beaver Valley 1	5	0	0	0	0	0	0
Salem 1	6	0	0	0	0	0	53 (0.4)
Farley 1	5	5	0	0	0	5	292 (2.3)
North Anna 1	5	1	0	0	0	1	294 (2.3)
Cook 2	5	0	0	0	0	0	53 (0.4)
North Anna 2	2	0	0	0	0	0	292 (2.3)
Sequoyah 1	2	0	0	0	0	0	0
Salem 2	2	0	0	0	0	0	0
McGuire 1	1	0	0	0	0	0	30 (0.4)
Farley 2	2	1	0	0	0	1	5 (0.05)
Sequoyah 2	1	0	0	0	0	0	0
Totals	240	50	20	21	4	95	

LR = Leak rate in gallons per minute

* Operating years through life of first set of steam generators.

Table A.2 Number of Steam Generator Events in Combustion Engineering Plants

Plants	Operating Years	Number of Events (Leaks & Ruptures) LR<0.1	0.1<LR<0.3	0.3<LR<RUP	Rupture	Total	Tubes Plugged Num. (%)
Palisades	11	0	1	2	0	3	3748 (22)
Maine Yankee	10	0	0	0	0	0	15 (1)
Fort Calhoun	9	0	0	0	0	0	3 (<1)
Calvert Cliffs 1	8	1	0	0	0	1	5 (<1)
Millstone 2	7	0	1	0	0	1	1509 (9)
St. Lucie 1	6	1	0	0	0	1	130 (<1)
Calvert Cliffs 2	6	0	0	0	0	0	5 (<1)
Arkansas 2	4	0	0	0	0	0	21 (<1)
Totals	61	2	2	2	0	6	

LR = Leak rate in gallons per minute

Table A.3 Number of Steam Generator Events in Babock and Wilcox Plants.

Plants	Operating Years	Number of Events (Leaks & Ruptures) LR<0.1	0.1<LR<0.3	0.3<LR<2UP	Rupture	Total	Tubes Plugged Num. (%)
Oconee 1	9	0	3	6	0	9	313 (2)
Oconee 2	9	0	1	2	0	3	30 (<1)
Oconee 3	8	0	3	2	0	5	103 (<1)
Arkansas 1	8	0	1	1	0	2	18 (<1)
Rancho Seco 1	8	0	0	1	0	1	15 (<1)
Crystal River 3	5	0	0	0	0	0	33 (<1)
Davis-Besse 1	5	0	0	1	0	1	27 (<1)
Totals	52	0	8	13	0	21	

LR = Leak rate in gallons per minutes

Table A.4 Number of Steam Generator Leaks and Ruptures by Degradation Mode in Westinghouse Plants (180 Mature Years, 240 Total Years of Reactor Operation)

Degradation Mode	Number of Events (Leaks and Ruptures)				
	LR<0.1	0.1<LR<0.3	0.3<LR<RUP	RUPTURE	TOTAL
Wastage	13	1	0	1	15
Cracking	27	7	6	1	41
IGA	8	2	0	0	10
Pitting/Fretting	1	0	1	0	2
Incorrect Plug Loc.	0	1	0	0	1
Tube Sheet Damage	0	1	0	0	1
Denting	4	8	1	0	13
Loose Parts	0	0	0	2	2
Fatigue	0	0	0	0	0
Erosion/Corrosion	0	0	0	0	0
Unknown	11	5	5	0	21
Totals	64	25	13	4	106

LR = Leak rate in gallons per minute

Table A.5 Number of Steam Generator Leaks and Ruptures by Degradation Mode in Combustion Engineering Plants (45 Mature Years, 61 Total Years of Reactor Operation)

Degradation Mode	Number of Events (Leaks and Ruptures)				
	LR<0.1	0.1<LR<0.3	0.3<LR<RUP	RUPTURE	TOTAL
Wastage	0	1	2	0	3
Cracking	0	0	0	0	0
IGA	1	0	0	0	1
Pitting/Fretting	1	1	0	0	2
Incorrect Plug Loc.	0	0	0	0	0
Tube Sheet Damage	0	0	0	0	0
Denting	0	0	0	0	0
Loose Parts	0	0	0	0	0
Fatigue	0	0	0	0	0
Erosion/Corrosion	1	0	0	0	1
Unknown	1	0	0	0	1
Totals	4	2	2	0	8

LR = Leak rate in gallons per minute

Table A.6 Numbers of Steam Generator Leaks and Ruptures by Degradation Mode in Babcock and Wilcox Plants (38 Mature Years, 52 Total Years of Reactor Operation)

Degradation Mode	Number of Events (Leaks and Ruptures)				
	LR<0.1	0.1<LR<0.3	0.3<LR<RUP	RUPTURE	TOTAL
Wastage	0	0	0	0	0
Cracking	0	0	1	0	1
IGA	0	1	2	0	3
Pitting/Fretting	0	0	0	0	0
Incorrect Plug Loc.	0	0	0	0	0
Tube Sheet Damage	0	0	0	0	0
Denting	1	0	0	0	1
Loose Parts	0	0	0	0	0
Fatigue	4	7	7	0	18
Erosion/Corrosion	0	0	2	0	2
Unknown	0	0	1	0	1
Totals	5	8	13	0	26

LR = Leak rate in gallons per minute

APPENDIX B. RISK ASSESSMENT GIVEN A STEAM GENERATOR TUBE RUPTURE EVENT IN A PWR

INTRODUCTION

In order to aid in the development of value-impact studies for NRC recommendations dealing with steam generator tube ruptures (SGTR), the following risk assessment was conducted on a PWR similar to the Sequoyah Nuclear Plant. Due to the time and resource constraints of the study, the results are preliminary and are intended to provide some indication of areas of concern rather than accurate detailed analysis.

The data base for this study was drawn heavily from the WASH-1400(1) data base and the newer IREP study. Note that the IREP data base primarily used the WASH-1400 data. The data for systems and components were input into a network model of SGTR response. Results were tabulated for four different release categories and for two types of plants. Release categories for this event were divided into two types of core melt, a major release and a minor release. The two plant types were a plant which could not respond to an AFW failure or an ATWS and a plant which had sufficient makeup and blow down capability to handle the AFW failure with a feed and bleed system and the ATWS with borated water injection.

Probabilities of the releases as well as public dose in man-REM were determined for the different plants and release categories given that a SGTR had occurred. The results and methodology are presented in the following text.

RESULTS SUMMARY

Based on the model developed for PWR response following a SGTR, the probabilistic results for the four release categories and two plant types are shown in Table 1. The first core melt category probability is dominated by total loss of power and AFW failure. The second core melt category is made up of a PORV LOCA and no response, and a PORV LOCA with RHR recirculation failure. The major and minor releases deal with secondary

Table I. Network Probabilistic Results

Release	Plant With No Feed & Bleed	Plant With Feed & Bleed
Core Melt Following SGTR	1.5×10^{-5}	4.9×10^{-6}
Core Melt Following PORV LOCA	2.1×10^{-7}	2.1×10^{-7}
Major Release	8.2×10^{-4}	8.2×10^{-4}
Minor Release	4.1×10^{-2}	4.1×10^{-2}

Table 2. Estimated Public Dose (Man REM) From SGTR

Release	Dose With No Feed & Bleed	Dose With Feed & Bleed
Core Melt Following SGTR	40.5	13.2
Core Melt Following PORV LOCA	.2	.2
Major Release	.2	.2
Minor Release	.9	.9
Total	41.8	14.5

side LOCAs and PORV LOCAs with containment effects. Note that these probabilities are conditional on the SGTR initiating event and do not include the SGTR event likelihood.

Table 2 shows the estimated public dose from each of the categories weighted by the likelihood of the release given a SGTR. The first core melt category was assumed to be similar to a WASH-1400 PWR category 4 release. The second core melt category is modeled like a PWR category 5 release. The major and minor release groupings are 1/10 and 1/100 of the release expected from a PWR category 7 core melt. Note that the first core melt category dominates the results followed by the minor release category. Also note that there is only a factor of between 2 to 3 difference between the two plant types. Thus for a SGTR, it appears that feed and bleed capability does not greatly decrease overall risk. These results are conditional on the SGTR initiating event as stated earlier. Thus the expected man-REM would have to be multiplied by the probability associated with the SGTR event, about 0.01-0.02.

OBJECTIVE

The objective of this task is to evaluate the risk to the public given a steam generator tube rupture event. The estimate of risk is intended to be a best estimate and no sensitivity studies or uncertainty analyses are intended for this effort. Results of other studies will be used where possible to reduce the size of this task. The risk result can be used in other tasks to show the risk reduction benefits of some of the recommendations. The major part of the work is associated with defining the probability of different release categories following a steam generator tube rupture. A second effort is designed to relate these release categories to public dose. At the end of these two subtasks, the results of each will be combined to give an estimate of the risk given this event.

METHODOLOGY

In order to define the probability of different releases following

a steam generator tube rupture, it is necessary to evaluate systems and operator responses to the event. It was felt initially that event tree methodology as used in previous risk analyses would be applicable to this effort. However, after preliminary applications of the technique, it was found that many problems arose due to the structure of the event trees. A more general and less structured methodology was developed using techniques similar to PERT charts or MARKOV model matrices. This technique, which will be referred to as a network analysis, is very similar to event trees but employs the analyst to branch to three or more sequences where event trees generally allow two branches (success-failure) and the network allows for compaction of the display of the sequences by eliminating unnecessary system or event options from paths which do not use them.

The networks were developed starting from a steam generator tube rupture event and progressing through various operator and system responses to end in four major release categories. Sequences which result in events considered beyond the scope of this analysis were left undeveloped. One such sequence is a recriticality event due to boron dilution in the primary from unborated secondary side water. These sequences are usually of low probability and should not impact the result significantly.

The four major release categories are as follows: (1) a core melt with dominant release path through the leak, (2) a core melt with dominant release path through containment, (3) a major release without melt, and (4) a minor release of lesser impact than the third category. The first category of core melt is felt to be similar to the WASH-1400 PWR Category 4 release. This category is a core melt with no benefit of containment radioactivity removal systems and an unisolated containment which is similar to a steam generator tube rupture melt due to the path through containment which exists by nature of the event. This should be a bounding of the consequences because most of the release from the melt will not to exit the rupture but should reside in containment. The second category of core melt is modeled after the WASH-1400 PWR category 5 release which is a core melt similar to category 4 but credit is made for containment radioactivity removal systems. Since the inputs to this category are primarily PORV LOCAs, the path through the steam generator is smaller than the path through the

PORV and thus most radioactivity is diverted to containment. The third category above is assumed to be similar to the WASH-1400 PWR Category 8 release with a LOCA and unisolated containment but is modeled using a reduction of the core melt category *T* results. The fourth category will be a lesser release than the third category.

The estimated doses for the releases were extracted from estimates made by NRC. The major and minor releases will use 1/10 and 1/100 of category *T* release doses.

The quantification of the network was done using only the probability of failures in the sequences. This is a conservatism which should not heavily impact the results and lends itself to rapid evaluations. The data base used relied on WASH-1400 data, IREP data, and engineering judgement for events not covered in WASH-1400. Point estimates of failure probability will be used rather than upper bounds on the data.

RESULTS

Figures 1 through 15 present the networks constructed for SGTR response. Each figure has an input node and output nodes which are labeled with two letters and give text describing system or plant status. These input and output nodes are shown in diamond shaped figures. No input node has the same two letter code as any output node. Thus, transfers are not shown in the network diagrams. The oval figures representing transitions from the input node to the output nodes signify system or response success or failure and in some cases, system or response intermediate status. Each transition oval is uniquely labeled with a numerical code for identification.

Each displayed network piece is identified by a response label. These response labels are functional definitions of the network piece and are presented following the figure number. Functions in the network analysis are as follows:

Figure 1.
OPERATOR INITIAL DIAGNOSTICS

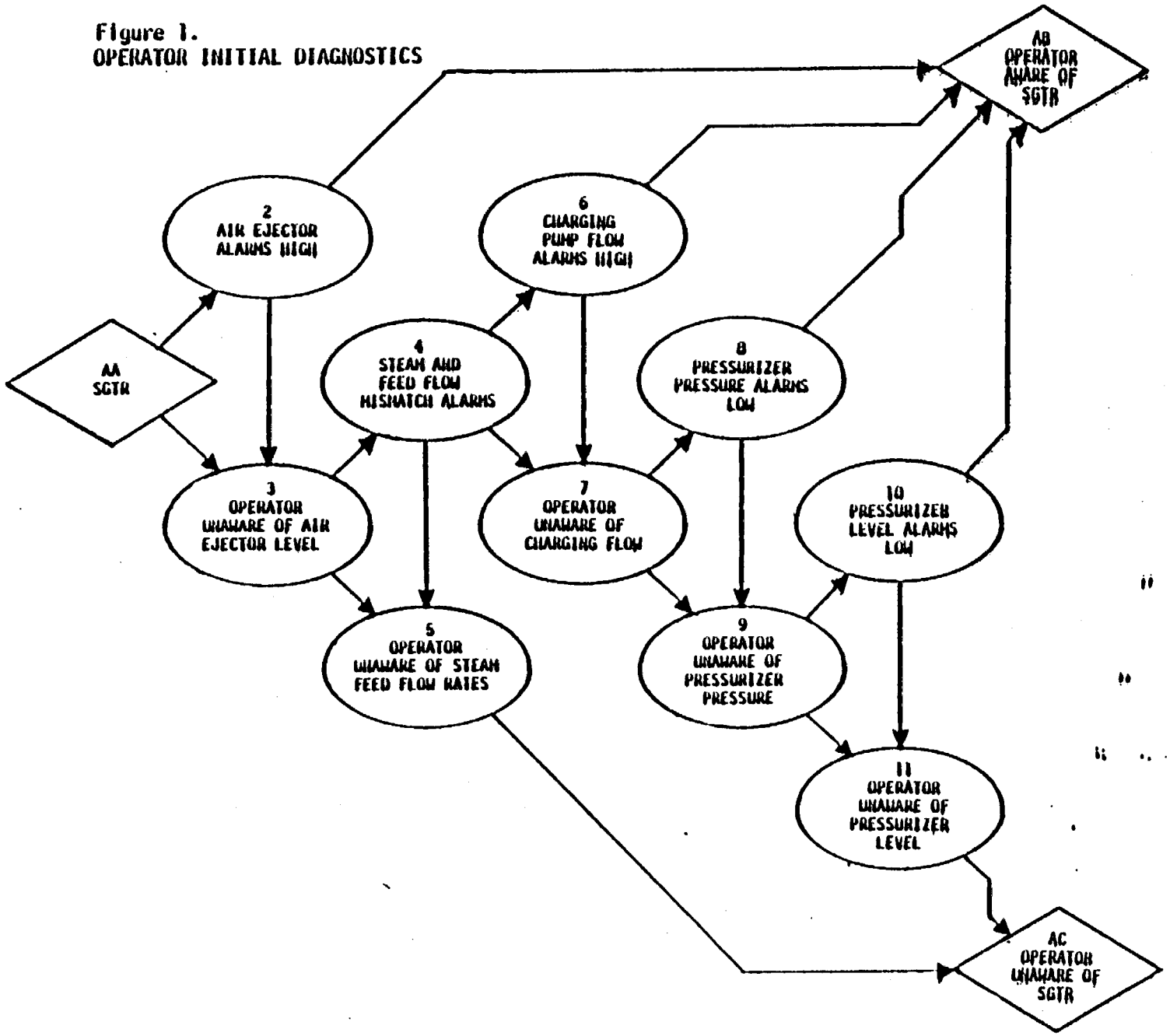

Figure 2.
CONTROL ROD SHUTDOWN OF REACTOR

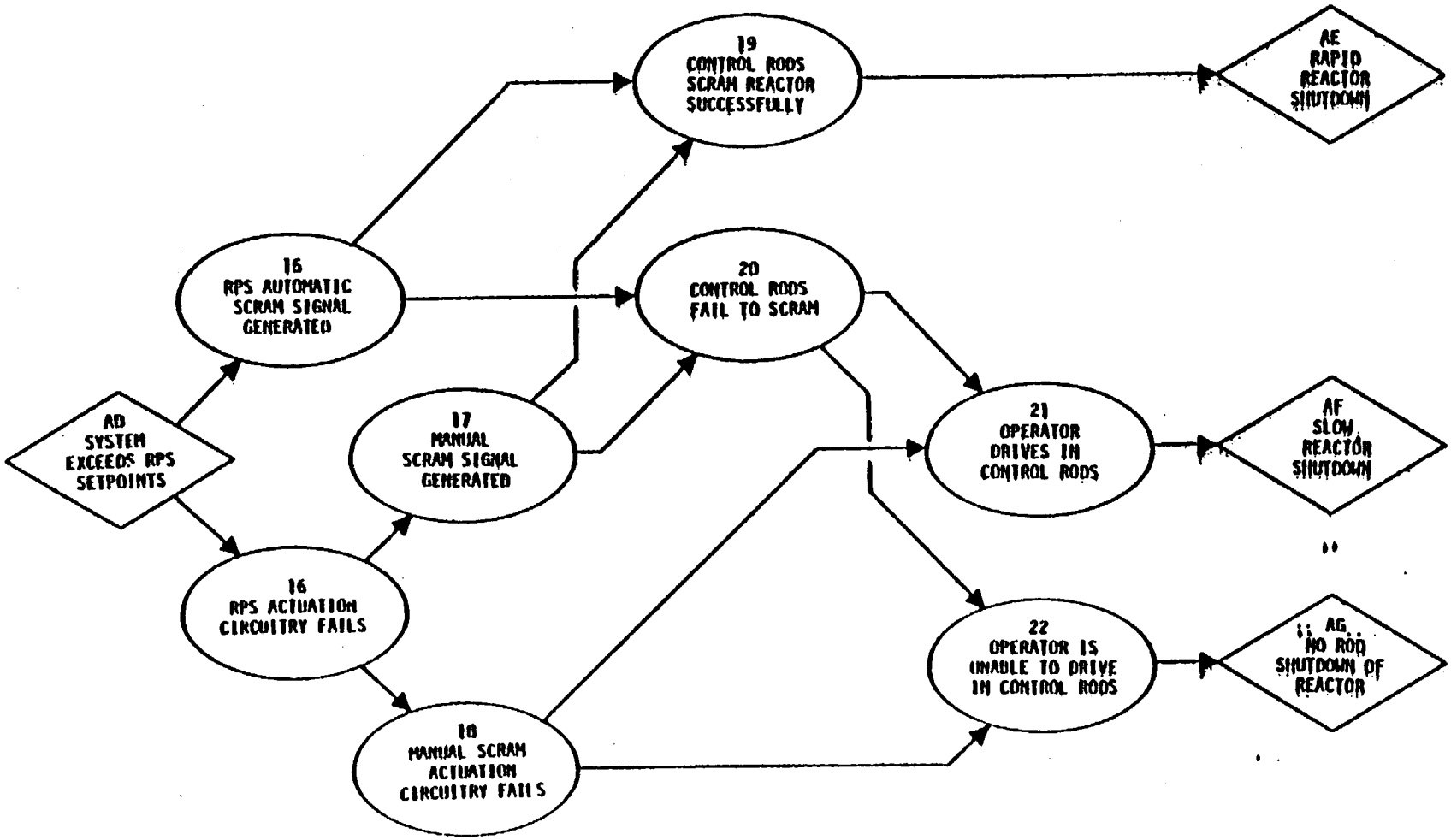

Figure 3.
SUPPORT SYSTEM STATUS

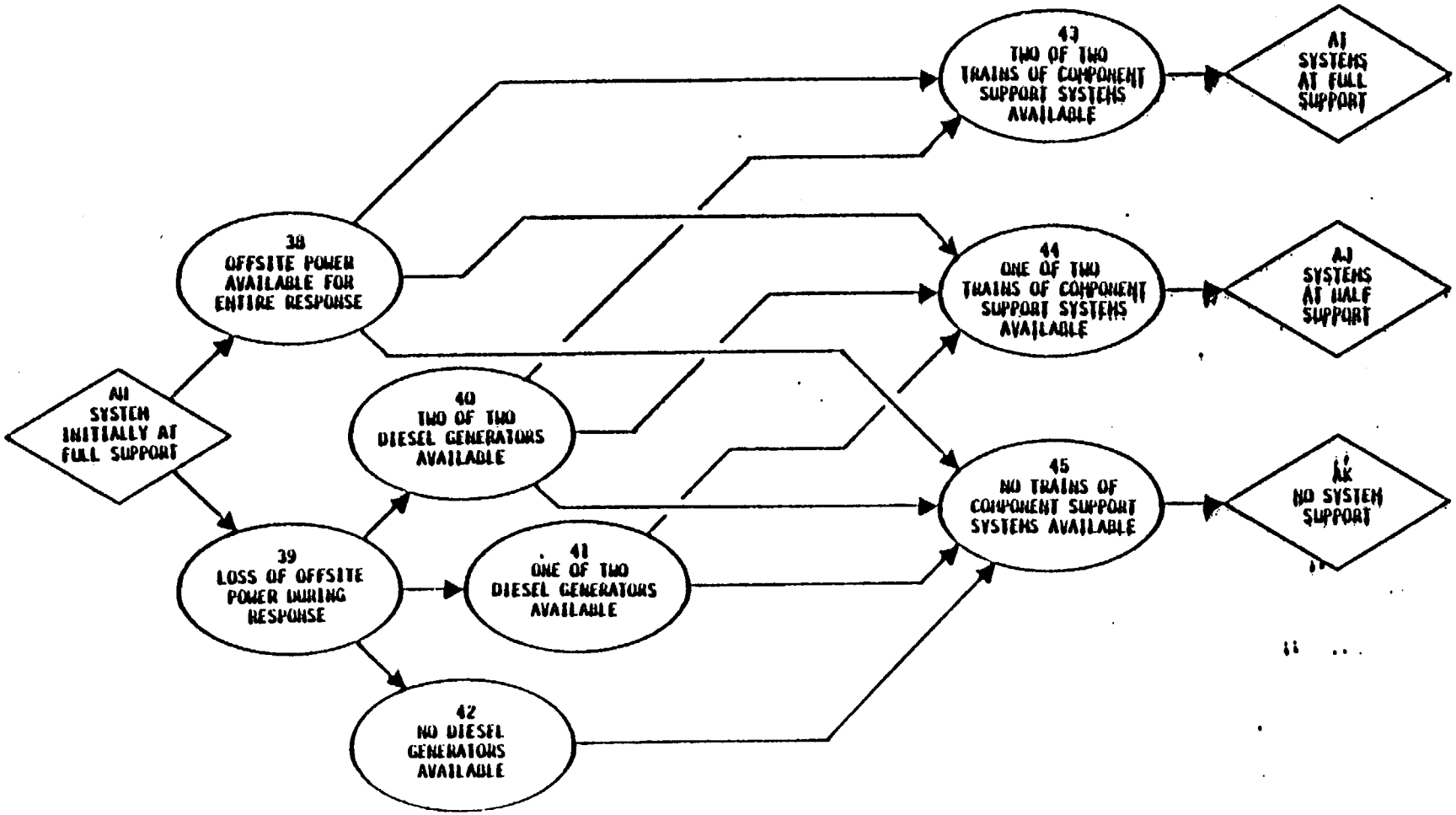

Figure 4.
SAFETY INJECTION SYSTEM RESPONSE

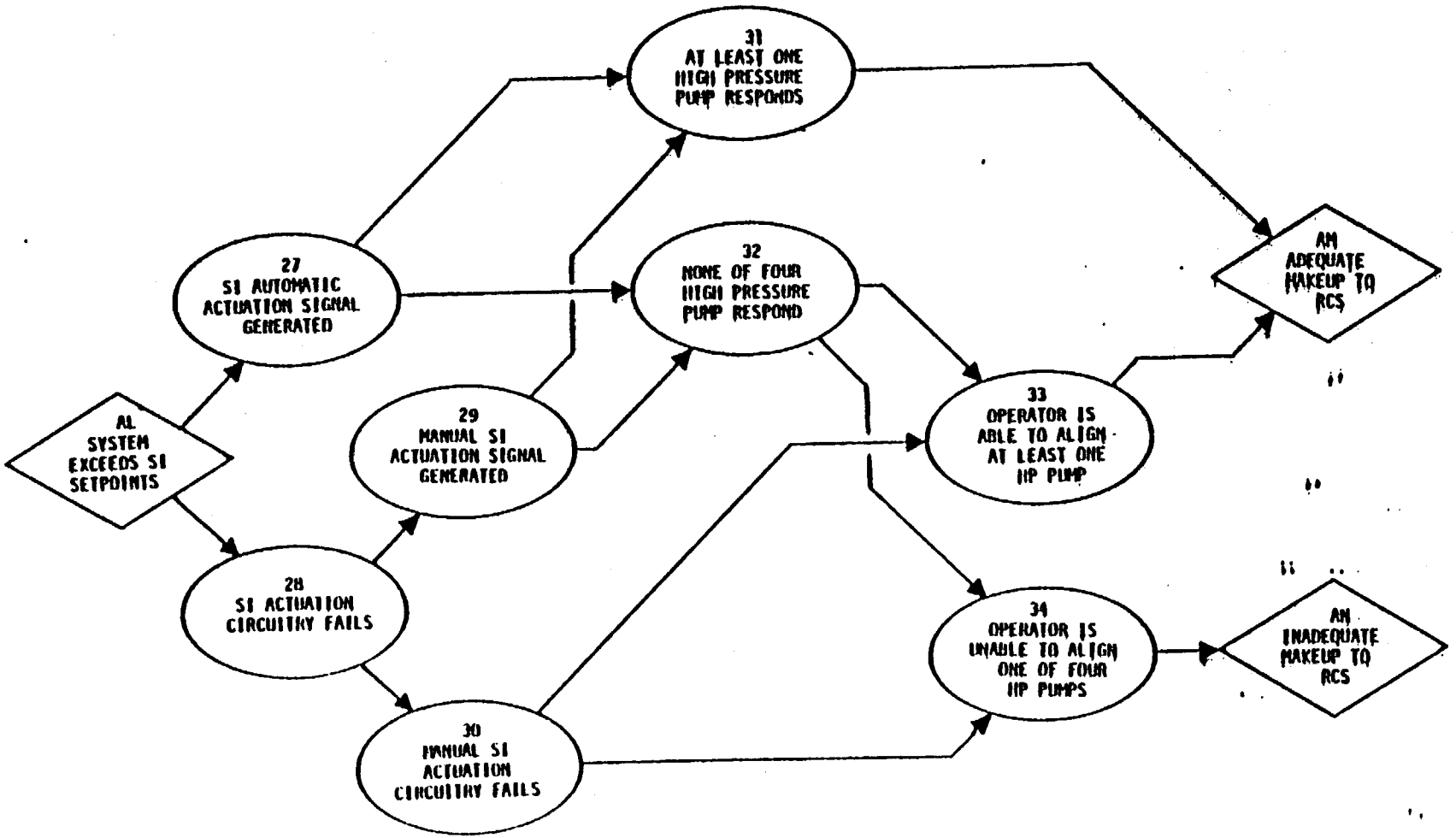

Figure 5.
SECONDARY SIDE INITIAL RESPONSE

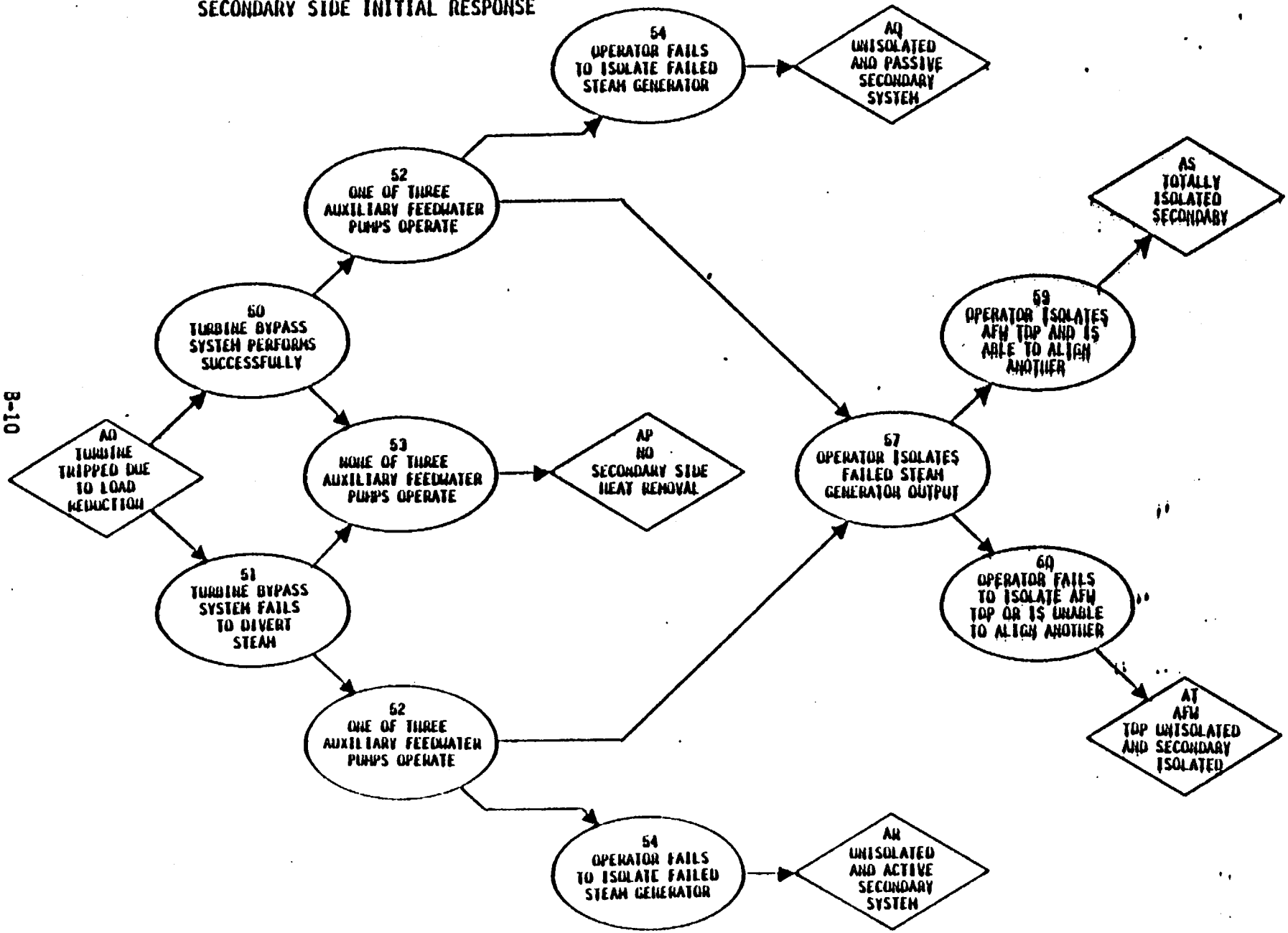

Figure 6.
PRIMARY SYSTEM PRESSURE CONTROL

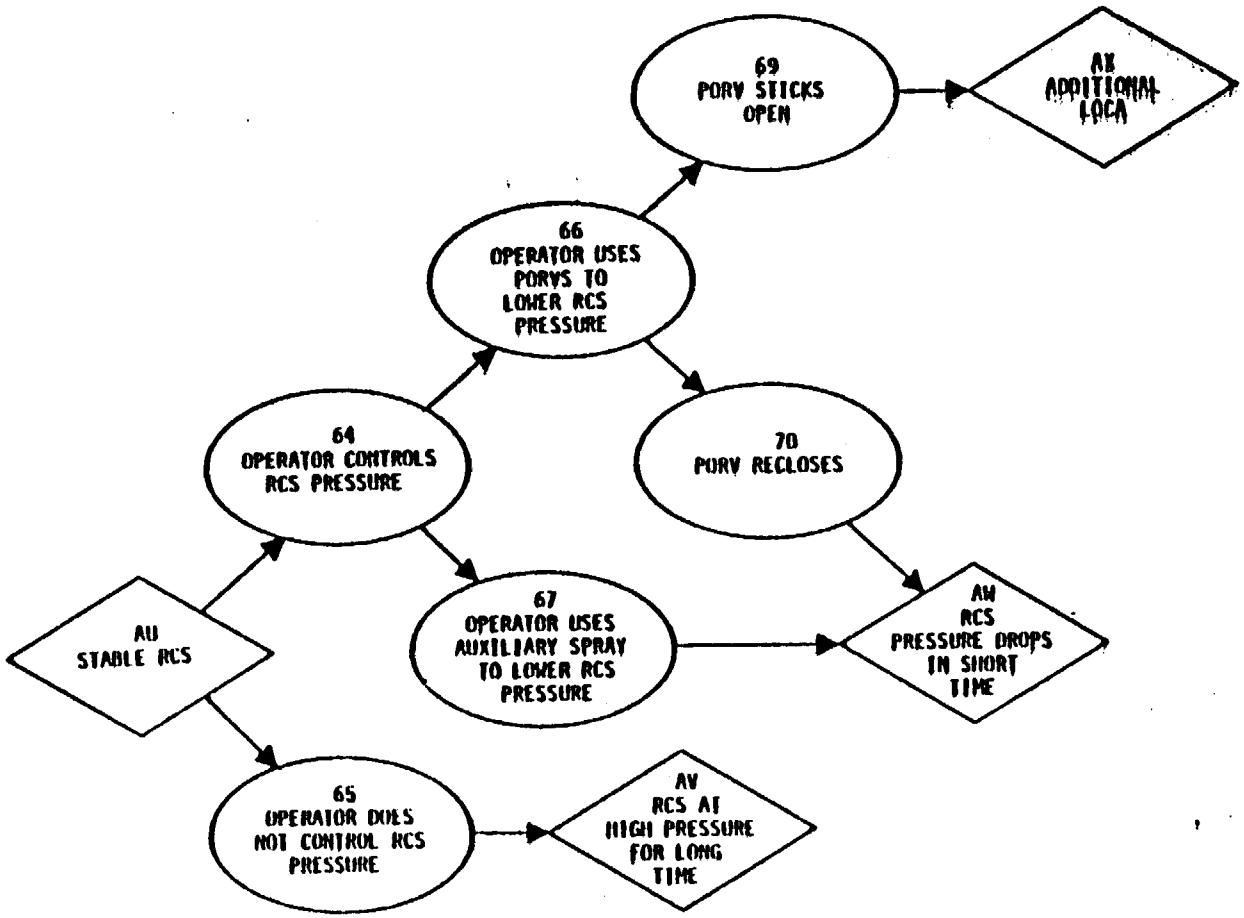

Figure 7.
SECONDARY SYSTEM PRESSURE CONTROL

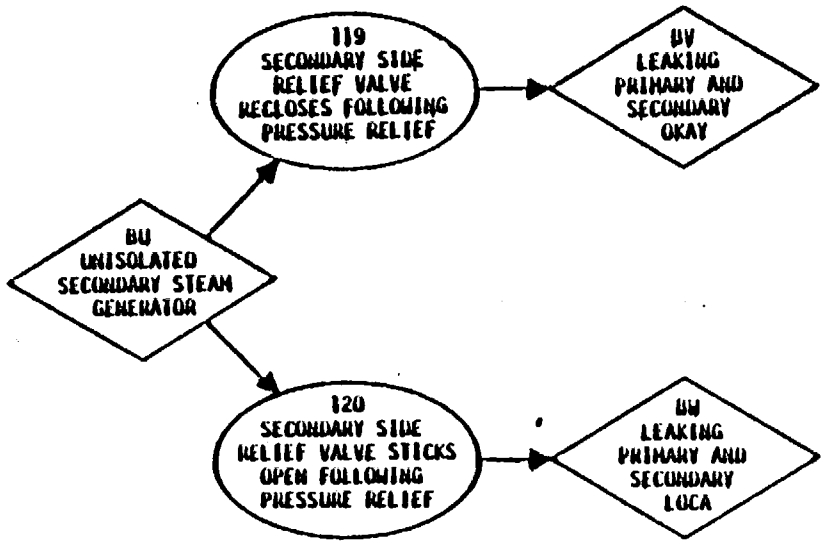

Figure 8.
SECONDARY SYSTEM PRESSURE CONTROL

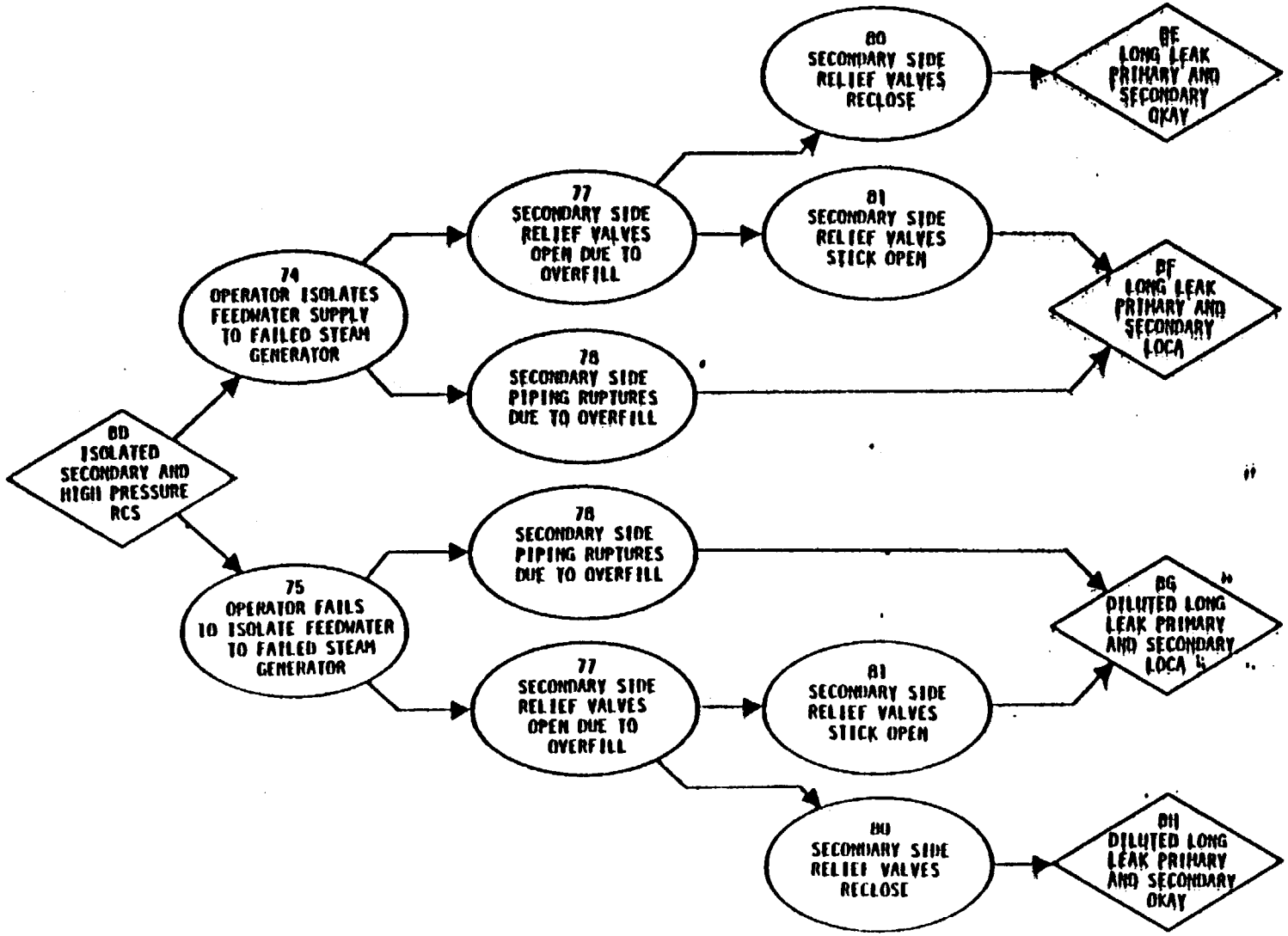

Figure 9.
LONG TERM COOLING

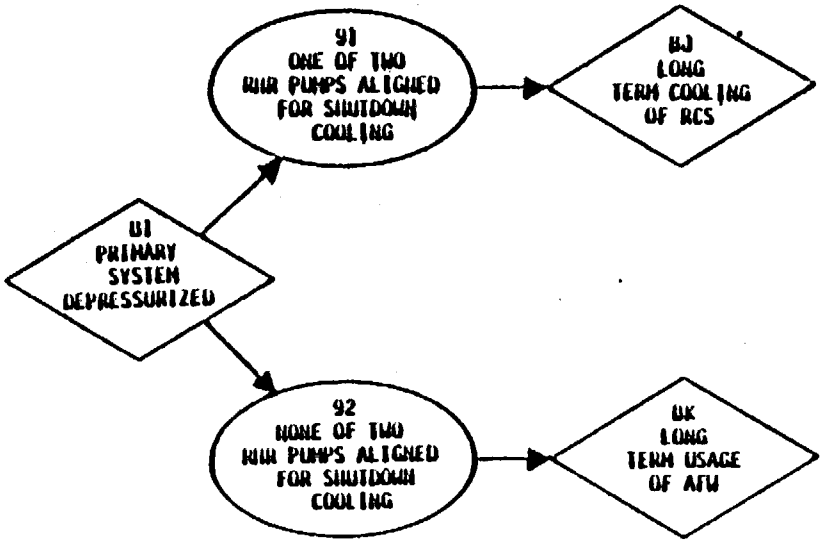

Figure 10.
OPERATOR PORV LOCA DIAGNOSTICS

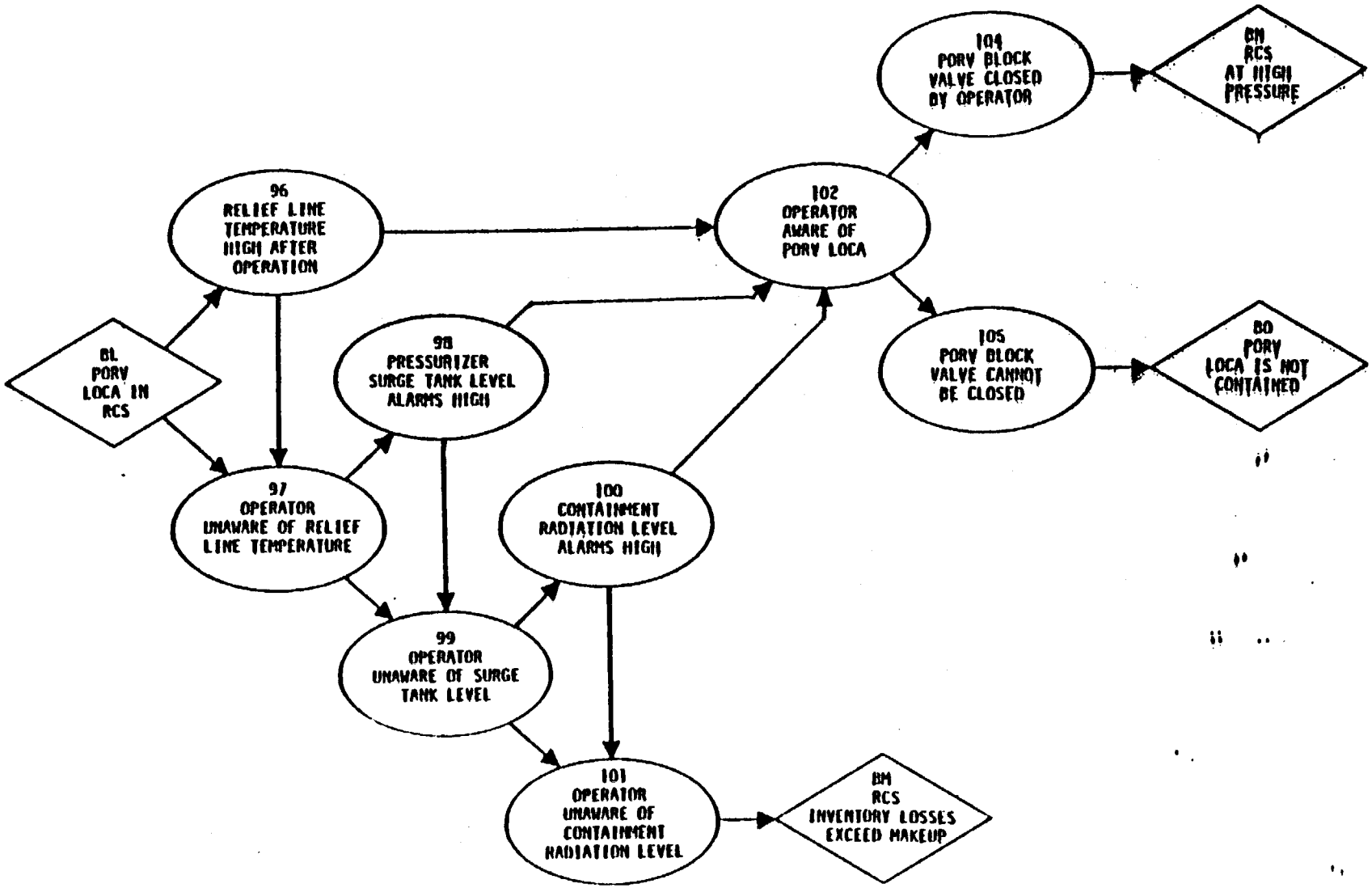

Figure 11.
LONG TERM LOCA RESPONSE

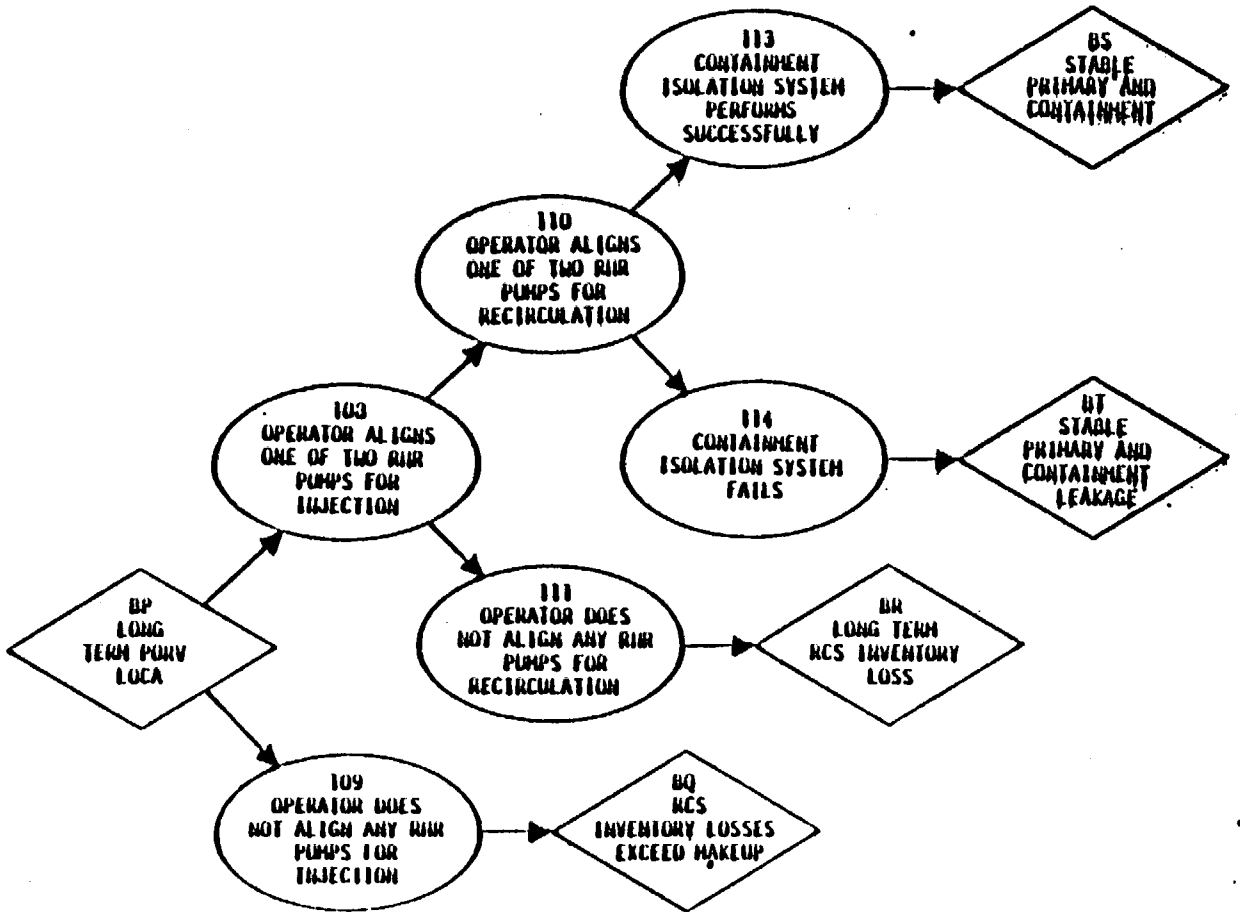

Figure 12.
SECONDARY SYSTEM PRESSURE CONTROL

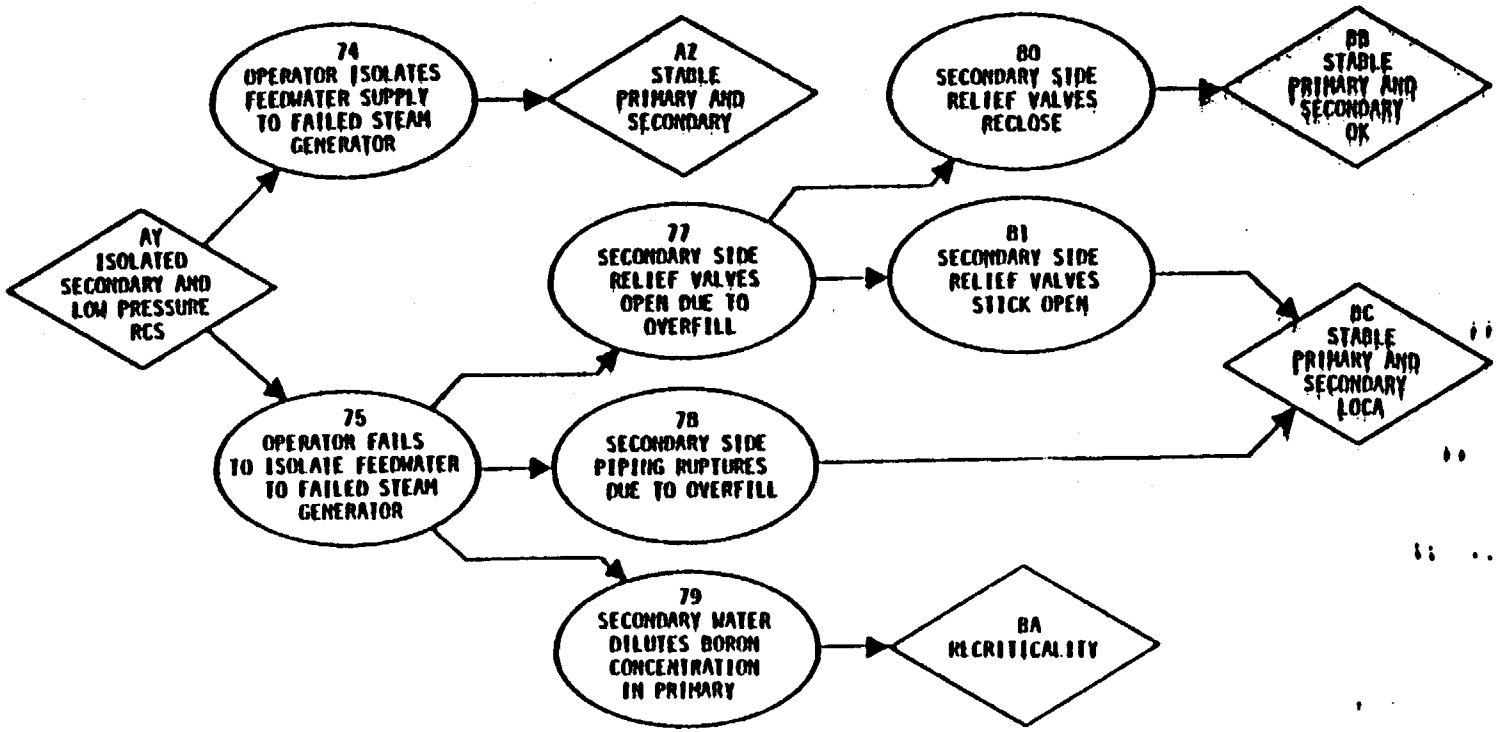

Figure 13.
FEED AND BLEED RESPONSE

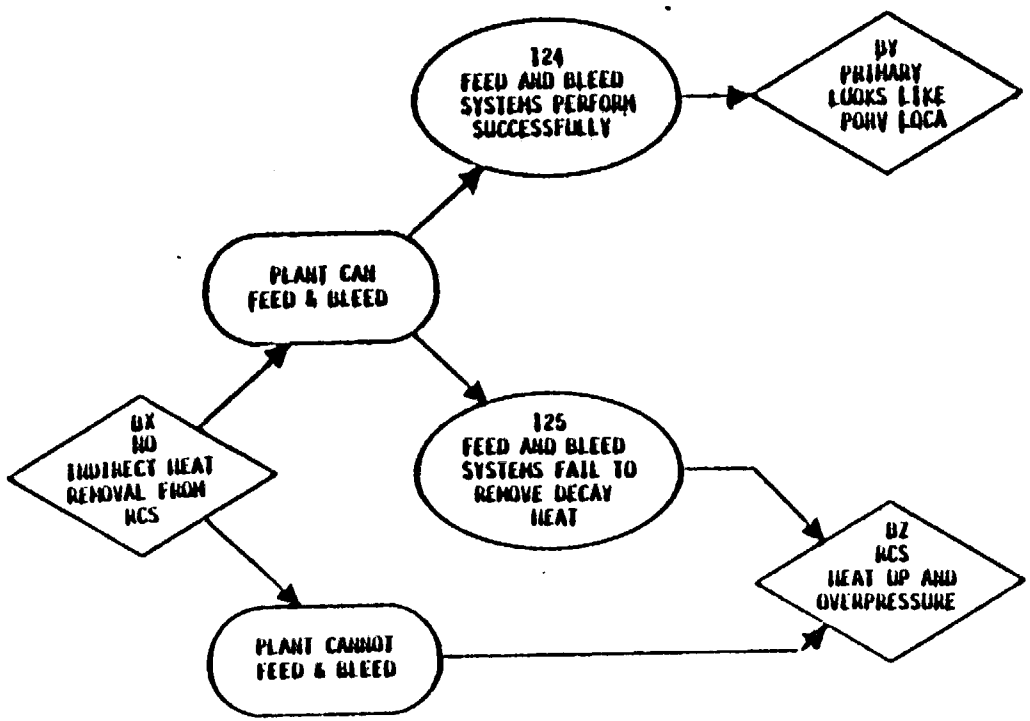

Figure 14.
ATWS RESPONSE

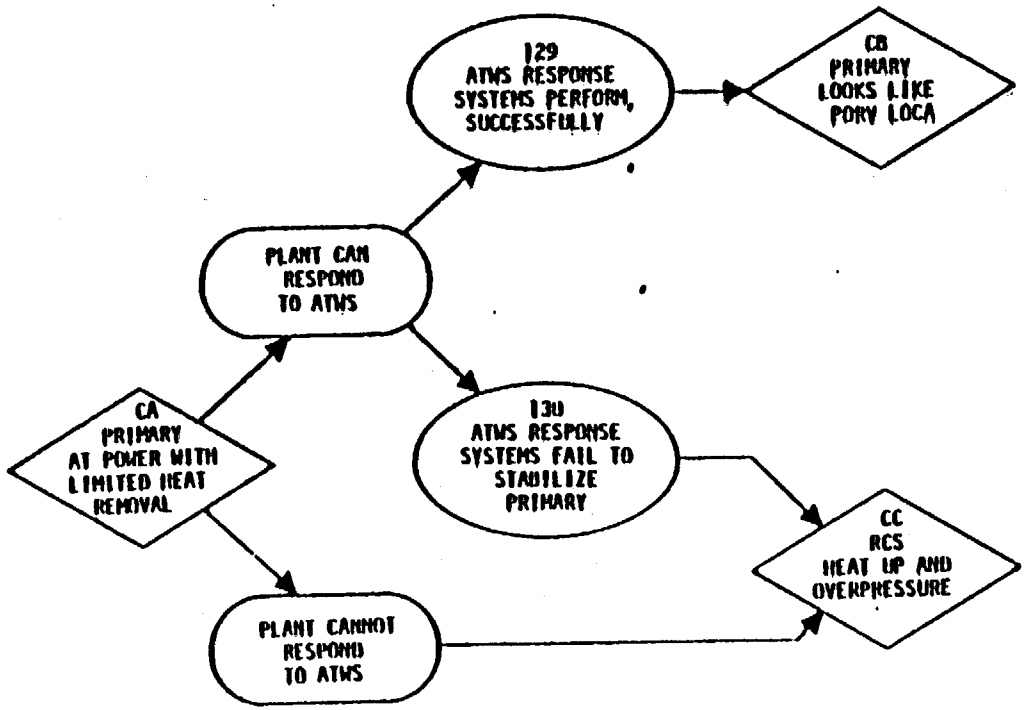

Figure 15.
SECONDARY SIDE INITIAL RESPONSE

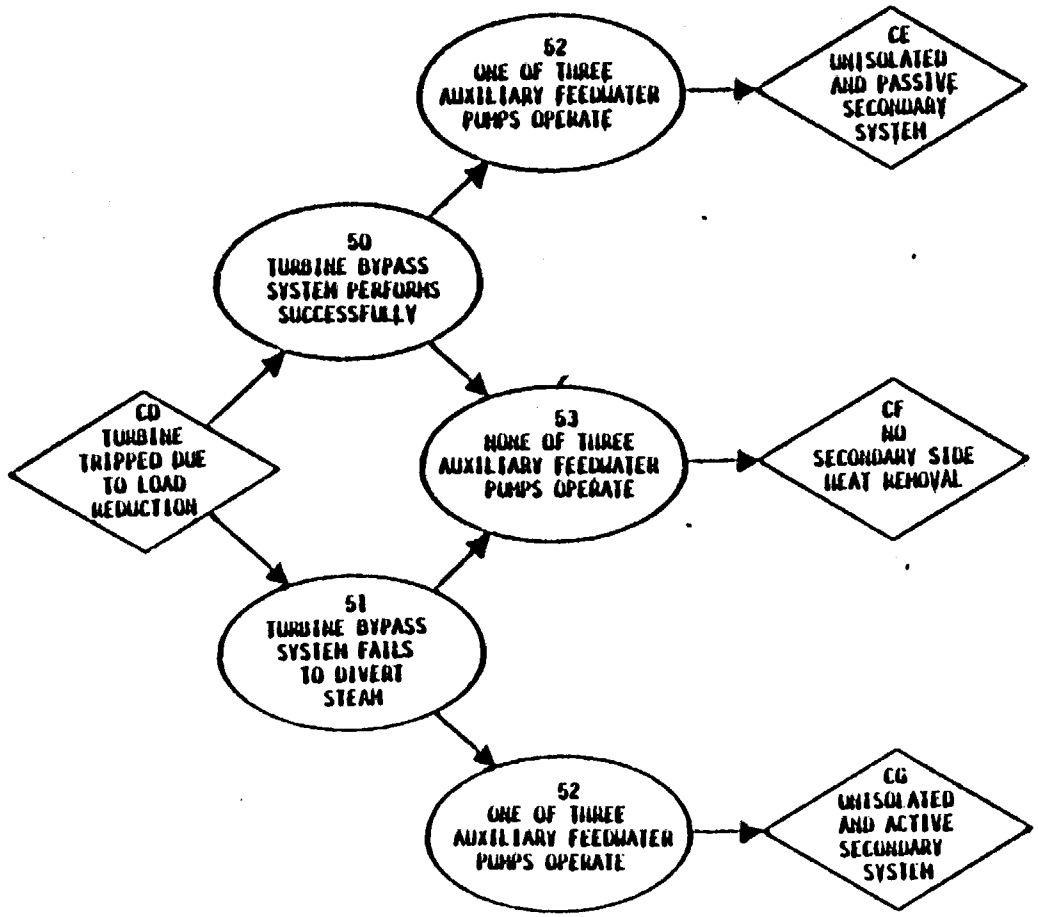

Functions	Figure
Operator Initial Diagnostics	1
Control Rod Shutdown of Reactor	2
Support System Status	3
Safety Injection System Response	4
Secondary Side Initial Response	5,15
Primary System Pressure Control	6
Secondary System Pressure Control	7,8,12
Long Term Cooling	9
Operator PORV LOCA Diagnostics	10
Long Term LOCA Response	11
Feed and Bleed Response	13
ATWS Response	14

Note that some functions are covered by more than one figure. This is due to the relationship of certain functions to preceding events.

In Figures 13 and 14, an oblong figure is used as an intermediate transition event. This figure is used to represent a definition or a switch. It deals with the type of plant modeled and questions the ability of a plant to respond to extreme events. The transition through the network goes either one way or the other and is not treated probabilistically at these points.

In order to show the proper transfers from one figures' output nodes to another figures' input node, Table 3 gives a compilation of all node transfers. The table indicates the figure number along with the shown input and output nodes. Below each figure definition is a listing of nodes which transfer into the network and a code for each of the output nodes in order to uniquely identify sequences. Output node codes which no longer transfer are labeled with an asterisk next to them. Thus, any output node code which is not starred will be shown as a transfer input node in another figure.

As an example of this process, we can start at Figure 1 and follow a sequence to completion. However, it is more interesting and useful to trace a sequence endpoint back through the network to the origin. Thus, look at Figure 11 output node code BR24. Input to this figure for this particular result came from BO24. In the Figure 10 listing, BO24 came from AX24. In the Figure 6 listing, AX24 came from AT8 which came from the

Table 3. Definitions of Network Pathways

Figure	Shown Input	Transfer Input	Outputs				
1	AA		AB	AC			
2	AD		AE	AF	AG		
		AB	AE1	AF1	AG1		
		AC	AE2	AF2	AG2		
3	AH		AI	AJ	AK		
		AE1	AI1	AJ1	AK1*		
		AF1	AI2	AJ2	AK2*		
		AG1	AI3	AJ3	AK3*		
		AE2	AI4	AJ4	AK4*		
		AF2	AI5	AJ5	AK5*		
		AG2	AI6	AJ6	AK6*		
4	AL		AM	AN			
		AI1	AM1	AN1			
		AJ1	AM2	AN2			
		AI2	AM3	AN3			
		AJ2	AM4	AN4			
		AI4	AM5	AN5*			
		AJ4	AM6	AN6*			
		AI5	AM7	AN7*			
		AJ5	AM8	AN8*			
5	AO		AP	AQ	AR	AS	AT
		AM1	AP1	AQ1	AR1	AS1	AT1
		AN1	AP2*	AQ2*	AR2*	AS2	AT2
		AM2	AP3	AQ3	AR3	AS3	AT3
		AN2	AP4*	AQ4*	AR4*	AS4	AT4
		AM3	AP5	AQ5	AR5	AS5	AT5
		AN3	AP6*	AQ6*	AR6*	AS6	AT6
		AM4	AP7	AQ7	AR7	AS7	AT7
		AN4	AP8*	AQ8*	AR8*	AS8	AT8

Figure (Cont)	Shown Input	Transfer Input	Outputs		
6	AU		AV	AW	AX
		AQ1	AV1	AW1	AX1
		AR1	AV2	AW2	AX2
		AS1	AV3	AW3	AX3
		AT1	AV4	AW4	AX4
		AS2	AV5	AW5	AX5
		AT2	AV6	AW6	AX6
		AQ3	AV7	AW7	AX7
		AR3	AV8	AW8	AX8
		AS3	AV9	AW9	AX9
		AT3	AV10	AW10	AX10
		AS4	AV11	AW11	AX11
		AT4	AV12	AW12	AX12
		AQ5	AV13	AW13	AX13
		AR5	AV14	AW14	AX14
		AS5	AV15	AW15	AX15
		AT5	AV16	AW16	AX16
		AS6	AV17	AW17	AX17
		AT6	AV18	AW18	AX18
		AQ7	AV19	AW19	AX19
		AR7	AV20	AW20	AX20
		AS7	AV21	AW21	AX21
		AT7	AV22	AW22	AX22
		AS8	AV23	AW23	AX23
		AT8	AV24	AW24	AX24
		CE1	AV25		
		CG1	AV26		
		CE2	AV27		
		CG2	AV28		
		CE3	AV29		

		CG3	AV30			
		CE4	AV31			
		CG4	AV32			

Figure (Cont)	Shown Input	Transfer Input	Outputs			
7	AY		AZ	BA	BB	BC
		AW3	AZ1	BA1*	BB1	BC1
		AW4	AZ2	BA2*	BB2	BC2
		AW5	AZ3	BA3*	BB3	BC3
		AW6	AZ4	BA4*	BB4	BC4
		AW9	AZ5	BA5*	BB5	BC5
		AW10	AZ6	BA6*	BB6	BC6
		AW11	AZ7	BA7*	BB7	BC7
		AW12	AZ8	BA8*	BB8	BC8
		AW15	AZ9	BA9*	BB9	BC9
		AW16	AZ10	BA10*	BB10	BC10
		AW17	AZ11	BA11*	BB11	BC11
		AW18	AZ12	BA12*	BB12	BC12
		AW21	AZ13	BA13*	BB13	BC13
		AW22	AZ14	BA14*	BB14	BC14
		AW23	AZ15	BA15*	BB15	BC15
		AW24	AZ16	BA16*	BB16	BC16
8	BD		BE	BF	BG	BH
		AV3	BE1	BF1	BG1	BH1
		AV4	BE2	BF2	BG2	BH2
		AV5	BE3	BF3	BG3	BH3
		AV6	BE4	BF4	BG4	BH4
		AV9	BE5	BF5	BG5	BH5
		AV10	BE6	BF6	BG6	BH6
		AV11	BE7	BF7	BG7	BH7
		AV12	BE8	BF8	BG8	BH8
		AV15	BE9	BF9	BG9	BH9
		AV16	BE10	BF10	BG10	BH10

		AV17	BE11	BF11	BG11	BH11
		AV18	BE12	BF12	BG12	BH12
		AV21	BE13	BF13	BG13	BH13
		AV22	BE14	BF14	BG14	BH14
		AV23	BE15	BF15	BG15	BH15
		AV24	BE16	BF16	BG16	BH16
Figure (Cont)	Shown Input	Transfer Input	Outputs			
8	BO	BN3	BE17	BF17	BG17	BH17
		BN4	BE18	BF18	BG18	BH18
		BN5	BE19	BF19	BG19	BH19
		BN6	BE20	BF20	BG20	BH20
		BN9	BE21	BF21	BG21	BH21
		BN10	BE22	BF22	BG22	BH22
		BN11	BE23	BF23	BG23	BH23
		BN12	BE24	BF24	BG24	BH24
		BN15	BE25	BF25	BG25	BH25
		BN16	BE26	BF26	BG26	BH26
		BN17	BE27	BF27	BG27	BH27
		BN18	BE28	BF28	BG28	BH28
		BN21	BE29	BF29	BG29	BH29
		BN22	BE30	BF30	BG30	BH30
		BN23	BE31	BF31	BG31	BH31
		BN24	BE32	BF32	BG32	BH32
9	BI		BJ	BK		
		AV1	BJ1*	BK1*		
		AW1	BJ2*	BK2*		
		AV7	BJ3*	BK3*		
		AW7	BJ4*	BK4*		
		AV13	BJ5*	BK5*		
		AW13	BJ6*	BK6*		
		AV19	BJ7*	BK7*		
		AW19	BJ8*	BK8*		
		AV25	BJ9*	BK9*		

AV27	BJ10*	BK10*
AV29	BJ11*	BK11*
AV31	BJ12*	BK12*
AZ1	BJ13*	BK13*
AZ2	BJ14*	BK14*
AZ3	BJ15*	BK15*
AZ4	BJ16*	BK16*

Figure (Cont)	Shown Input	Transfer Input	Outputs	
9	BI	AZ5	BJ17*	BK17*
		AZ6	BJ18*	BK18*
		AZ7	BJ19*	BK19*
		AZ8	BJ20*	BK20*
		AZ9	BJ21*	BK21*
		AZ10	BJ22*	BK22*
		AZ11	BJ23*	BK23*
		AZ12	BJ24*	BK24*
		AZ13	BJ25*	BK25*
		AZ14	BJ26*	BK26*
		AZ15	BJ27*	BK27*
		AZ16	BJ28*	BK28*
		BB1	BJ29*	BK29*
		BB2	BJ30*	BK30*
		BB3	BJ31*	BK31*
		BB4	BJ32*	BK32*
		BB5	BJ33*	BK33*
		BB6	BJ34*	BK34*
		BB7	BJ35*	BK35*
		BB8	BJ36*	BK36*
		BB9	BJ37*	BK37*
		BB10	BJ38*	BK38*
		BB11	BJ39*	BK39*
		BB12	BJ40*	BK40*

		BB13	BJ41*	BK41*
		BB14	BJ42*	BK42*
		BB15	BJ43*	BK43*
		BB16	BJ44*	BK44*
		BCI	BJ45*	BK45*
		BC2	BJ46*	BK46*
		BC3	BJ47*	BK47*
		BC4	BJ48*	BK48*
		BC5	BJ49*	BK49*
		BC6	BJ50*	BK50*
Figure (Cont)	Shown Input	Transfer Input	Outputs	
9	BI	BC7	BJ51*	BK51*
		BC8	BJ52*	BK52*
		BC9	BJ53*	BK53*
		BC10	BJ54*	BK54*
		BC11	BJ55*	BK55*
		BC12	BJ56*	BK56*
		BC13	BJ57*	BK57*
		BC14	BJ58*	BK58*
		BC15	BJ59*	BK59*
		BC16	BJ60*	BK60*
		BE1	BJ61*	BK61*
		BE2	BJ62*	BK62*
		BE3	BJ63*	BK63*
		BE4	BJ64*	BK64*
		BE5	BJ65*	BK65*
		BE6	BJ66*	BK66*
		BE7	BJ67*	BK67*
		BE8	BJ68*	BK68*
		BE9	BJ69*	BK69*
		BE10	BJ70*	BK70*
		BE11	BJ71*	BK71*
		BE12	BJ72*	BK72*

		3E13	3J73*	3K73*
		3E14	3J74*	3K74*
		3E15	3J75*	3K75*
		3E16	3J76*	3K76*
		3E17	3J77*	3K77*
		3E18	3J78*	3K78*
		3E19	3J79*	3K79*
		3E20	3J80*	3K80*
		3E21	3J81*	3K81*
		3E22	3J82*	3K82*
		3E23	3J83*	3K83*
		3E24	3J84*	3K84*
Figure (Cont)	Shown Input	Transfer Input		Outputs
9	3I	3E25	3J85*	3K85*
		3E26	3J86*	3K86*
		3E27	3J87*	3K87*
		3E28	3J88*	3K88*
		3E29	3J89*	3K89*
		3E30	3J90*	3K90*
		3E31	3J91*	3K91*
		3E32	3J92*	3K92*
		3F1	3J93*	3K93*
		3F2	3J94*	3K94*
		3F3	3J95*	3K95*
		3F4	3J96*	3K96*
		3F5	3J97*	3K97*
		3F6	3J98*	3K98*
		3F7	3J99*	3K99*
		3F8	3J100*	3K100*
		3F9	3J101*	3K101*
		3F10	3J102*	3K102*
		3F11	3J103*	3K103*
		3F12	3J104*	3K104*

		BFI3	BJI05*	BKI05*
		BFI4	BJI06*	BKI06*
		BFI5	BJI07*	BKI07*
		BFI6	BJI08*	BKI08*
		BFI7	BJI09*	BKI09*
		BFI8	BJIIO*	BKIIO*
		BFI9	BJIII*	BKIII*
		BF20	BJII2*	BKII2*
		BF2I	BJII3*	BKII3*
		BF22	BJII4*	BKII4*
		BF23	BJII5*	BKII5*
		BF24	BJII6*	BKII6*
		BF25	BJII7*	BKII7*
		BF26	BJII8*	BKII8*
Figure (Cont)	Shown Input	Transfer Input	Outputs	
9	BI	BF27	BJII9*	BKII9*
		BF28	BJI20*	BKI20*
		BF29	BJI2I*	BKI2I*
		BF30	BJI22*	BKI22*
		BF31	BJI23*	BKI23*
		BF32	BJI24*	BKI24*
		BG1	BJI25*	BKI25*
		BG2	BJI26*	BKI26*
		BG3	BJI27*	BKI27*
		BG4	BJI28*	BKI28*
		BG5	BJI29*	BKI29*
		BG6	BJI30*	BKI30*
		BG7	BJI31*	BKI31*
		BG8	BJI32*	BKI32*
		BG9	BJI33*	BKI33*
		BG10	BJI34*	BKI34*
		BG11	BJI35*	BKI35*
		BG12	BJI36*	BKI36*

		BG13	BJ137*	BK137*
		BG14	BJ138*	BK138*
		BG15	BJ139*	BK139*
		BG16	BJ140*	BK140*
		BG17	BJ141*	BK141*
		BG18	BJ142*	BK142*
		BG19	BJ143*	BK143*
		BG20	BJ144*	BK144*
		BG21	BJ145*	BK145*
		BG22	BJ146*	BK146*
		BG23	BJ147*	BK147*
		BG24	BJ148*	BK148*
		BG25	BJ149*	BK149*
		BG26	BJ150*	BK150*
		BG27	BJ151*	BK151*
		BG28	BJ152*	BK152*
Figure (Cont)	Shown Input	Transfer Input	Outputs	
9	BI	BG29	BJ153*	BK153*
		BG30	BJ154*	BK154*
		BG31	BJ155*	BK155*
		BG32	BJ156*	BK156*
		BH1	BJ157*	BK157*
		BH2	BJ158*	BK158*
		BH3	BJ159*	BK159*
		BH4	BJ160*	BK160*
		BH5	BJ161*	BK161*
		BH6	BJ162*	BK162*
		BH7	BJ163*	BK163*
		BH8	BJ164*	BK164*
		BH9	BJ165*	BK165*
		BH10	BJ166*	BK166*
		BH11	BJ167*	BK167*
		BH12	BJ168*	BK168*

		BHI3	BJ169*	BK169*
		BHI4	BJ170*	BK170*
		BHI5	BJ171*	BK171*
		BHI6	BJ172*	BK172*
		BHI7	BJ173*	BK173*
		BHI8	BJ174*	BK174*
		BHI9	BJ175*	BK175*
		BH20	BJ176*	BK176*
		BH21	BJ177*	BK177*
		BH22	BJ178*	BK178*
		BH23	BJ179*	BK179*
		BH24	BJ180*	BK180*
		BH25	BJ181*	BK181*
		BH26	BJ182*	BK182*
		BH27	BJ183*	BK183*
		BH28	BJ184*	BK184*
		BH29	BJ185*	BK185*
		BH30	BJ186*	BK186*
Figure (Cont)	Shown Input	Transfer Input		Outputs
9	BI	BH31	BJ187*	BK187*
		BH32	BJ188*	BK188*
		BN1	BJ189*	BK189*
		BN7	BJ190*	BK190*
		BN13	BJ191*	BK191*
		BN19	BJ192*	BK192*
		BV1	BJ193*	BK193*
		BV2	BJ194*	BK194*
		BV3	BJ195*	BK195*
		BV4	BJ196*	BK196*
		BV5	BJ197*	BK197*
		BV6	BJ198*	BK198*
		BV7	BJ199*	BK199*
		BV8	BJ200*	BK200*

		BV9	BJ201*	BK201*	
		BV10	BJ202*	BK202*	
		BV11	BJ203*	BK203*	
		BV12	BJ204*	BK204*	
		BV13	BJ205*	BK205*	
		BV14	BJ206*	BK206*	
		BV15	BJ207*	BK207*	
		BV16	BJ208*	BK208*	
		BW1	BJ209*	BK209*	
		BW2	BJ210*	BK210*	
		BW3	BJ211*	BK211*	
		BW4	BJ212*	BK212*	
		BW5	BJ213*	BK213*	
		BW6	BJ214*	BK214*	
		BW7	BJ215*	BK215*	
		BW8	BJ215*	BK216*	
		BW9	BJ217*	BK217*	
		BW10	BJ218*	BK218*	
		BW11	BJ219*	BK219*	
		BW12	BJ220*	BK220*	
Figure (Cont)	Shown Input	Transfer Input		Outputs	
9	BI	BW13	BJ221*	BK221*	
		BW14	BJ222*	BK222*	
		BW15	BJ223*	BK223*	
		BW16	BJ224*	BK224*	
10	BL		BM	BN	BO
		AX1	BM1*	BN1	BO1
		AX2	BM2*	BN2	BO2
		AX3	BM3*	BN3	BO3
		AX4	BM4*	BN4	BO4
		AX5	BM5*	BN5	BO5
		AX6	BM6*	BN6	BO6
		AX7	BM7*	BN7	BO7

		AX8	BM8*	BN8	BO8	
		AX9	BM9*	BN9	BO9	
		AX10	BM10*	BN10	BO10	
		AX11	BM11*	BN11	BO11	
		AX12	BM12*	BN12	BO12	
		AX13	BM13*	BN13	BO13	
		AX14	BM14*	BN14	BO14	
		AX15	BM15*	BN15	BO15	
		AX16	BM16*	BN16	BO16	
		AX17	BM17*	BN17	BO17	
		AX18	BM18*	BN18	BO18	
		AX19	BM19*	BN19	BO19	
		AX20	BM20*	BN20	BO20	
		AX21	BM21*	BN21	BO21	
		AX22	BM22*	BN22	BO22	
		AX23	BM23*	BN23	BO23	
		AX24	BM24*	BN24	BO24	
11	BP		BQ	BR	BS	BT
		BO1	BQ1*	BR1*	BS1*	BT1*
		BO2	BQ2*	BR2*	BS2*	BT2*
		BO3	BQ3*	BR3*	BS3*	BT3*
		BO4	BQ4*	BR4*	BS4*	BT4*
Figure (Cont)	Shown Input	Transfer Input		Outputs		
11	BP	BO5	BQ5*	BR5*	BS5*	BT5*
		BO6	BQ6*	BR6*	BS6*	BT6*
		BO7	BQ7*	BR7*	BS7*	BT7*
		BO8	BQ8*	BR8*	BS8*	BT8*
		BO9	BQ9*	BR9*	BS9*	BT9*
		BO10	BQ10*	BR10*	BS10*	BT10*
		BO11	BQ11*	BR11*	BS11*	BT11*
		BO12	BQ12*	BR12*	BS12*	BT12*
		BO13	BQ13*	BR13*	BS13*	BT13*
		BO14	BQ14*	BR14*	BS14*	BT14*

		BO15	BQ15*	BR15*	BS15*	BT15*
		BO16	BQ16*	BR16*	BS16*	BT16*
		BO17	BQ17*	BR17*	BS17*	BT17*
		BO18	BQ18*	BR18*	BS18*	BT18*
		BO19	BQ19*	BR19*	BS19*	BT19*
		BO20	BQ20*	BR20*	BS20*	BT20*
		BO21	BQ21*	BR21*	BS21*	BT21*
		BO22	BQ22*	BR22*	BS22*	BT22*
		BO23	BQ23*	BR23*	BS23*	BT23*
		BO24	BQ24*	BR24*	BS24*	BT24*
		BY1	BQ25*	BR25*	BS25*	BT25*
		BY2	BQ26*	BR26*	BS26*	BT25*
		BY3	BQ27*	BR27*	BS27*	BT27*
		BY4	BQ28*	BR28*	BS28*	BT28*
		BY5	BQ29*	BR29*	BS29*	BT29*
		BY6	BQ30*	BR30*	BS30*	BT30*
		BY7	BQ31*	BR31*	BS31*	BT31*
		BY8	BQ32*	BR32*	BS32*	BT32*
		CB1	BQ33*	BR33*	BS33*	BT33*
		CB2	BQ34*	BR34*	BS34*	BT34*
		CB3	BQ35*	BR35*	BS35*	BT25*
		CB4	BQ36*	BR36*	BS36*	BT36*
12	BU		BV	BW		
		AV2	BV1	BW1		

Figure (Cont)	Shown Input	Transfer Input		Outputs
12	BU	AW2	BV2	BW2
		AV8	BV3	BW3
		AW8	BV4	BW4
		AV14	BV5	BW5
		AW14	BV6	BW6
		AV20	BV7	BW7
		AW20	BV8	BW8
		AV26	BV9	BW9

		AV28	BV10	BW10	
		AV30	BV11	BW11	
		AV32	BV12	BW12	
		BN2	BV13	BW13	
		BN9	BV14	BW14	
		BN14	BV15	BW15	
		BN20	BV16	BW16	
13	BX		BY	BZ	
		AP1	BY1	BZ1*	
		AP3	BY2	BZ2*	
		AP5	BY3	BZ3*	
		AP7	BY4	BZ4*	
		CF1	BY5	BZ5*	
		CF2	BY6	BZ6*	
		CF3	BY7	BZ7*	
		CF4	BY8	BZ8*	
14	CA		CB	CC	
		AI3	CB1	CC1*	
		AJ3	CB2	CC2*	
		AI6	CB3	CC3*	
		AJ6	CB4	CC4*	
15	CD		CE	CF	CG
		AM5	CE1	CF1	CG1
		AM6	CE2	CF2	CG2
		AM7	CE3	CF3	CG3
		AM8	CE4	CF4	CG4

Figure 5 listing and AN4 from Figure 4 and AJ2 from Figure 3 and AF1 from Figure 2 and AB from Figure 1. Thus we have a sequence

AA-AB-AF-AJ-AN-AT-AX-BO-BR

This corresponds to a SGTR with the operator aware of the SGTR, with a failure to scram but the operator runs in the control rods, and a loss of one train of support systems, and no additional SI pumps can be started leaving only the reciprocating charging pump running, and the operator isolates the output of the failed steam generator but does not isolate the steam feed to the AFW turbine driven pump from the failed steam generator, and the AFW is responding, however the operator reduces primary pressure via the PORVs which stick open, and the operator attempts to start the RHR pumps for injection now that he has an additional and larger LOCA but he cannot and the core melts due to inventory loss. Any endpoint node can be traced back and a similar sequence constructed.

Having defined the sequences in this manner, the networks next must be quantified. Table 4 lists the node to node transition probabilities for the networks. Success probabilities are simply shown as probabilities equal to 1.0 for ease of solution. The description portion of the table gives a code name to events and a brief description of the assumptions or success criteria behind the value and a reference for the data used to derive the result. Transitions which are dependent on full or half support system availability are listed twice and labeled. System failure probabilities below 10^{-3} are given a common mode failure probability of 10^{-5}. Operator error is assumed to be 10^{-2} for this study.

A summary of the network probabilities from input node to output node is given in Table 5. Distinction is made for full and half support as well as feed and bleed and ATWS response options.

Solving all sequences of the networks and collecting similar release sequences lead to the results shown in Table 6. Sequences leading to core melt are presented first with an additional split between PORV LOCA melts (category 5) and other melts (category 4). End node labels are shown to identify sequences. In the major and minor release categories, dominant

nodes (nodes which determine release) are displayed as well as end nodes.

Table 7 is shown to give the estimated public doses associated with different release categories from WASH-1400. This data is used with the results from Table 6 to develop the results in Table 2.

REFERENCE

(1) WASH-1400, NUREG 75/014, Reactor Safety Study, an Assessment of Accident Risks in U.S. Commercial Nuclear Power Plants, October 1975.

Table 1. Probability Data Base for Network

Figure	Node to Node		Probability	Description
1	AA	2	1.0	
	AA	3	1.1×10^{-2}	INSTR/CAL - 350 hr inspection interval, 3.1×10^{-5}/hr, IREP
	2	3	1.0×10^{-2}	OE - operator error, assumption
	2	AB	1.0	
	3	4	1.0	
	3	5	1.1×10^{-2}	INSTR/CAL
	4	5	1.0×10^{-2}	OE
	4	6	1.0	
	4	7	1.1×10^{-2}	INSTR/CAL
	5	AC	1.0	
	6	7	1.0×10^{-2}	OE
	6	AB	1.0	
	7	8	1.0	
	7	9	1.1×10^{-2}	INSTR/CAL
	8	9	1.0×10^{-2}	OE
	8	AB	1.0	
	9	10	1.0	
	9	11	1.1×10^{-2}	INSTR/CAL
	10	11	1.0×10^{-2}	OE
	10	AB	1.0	
	11	AC	1.0	
2	AD	15	1.0	
	AD	16	3.6×10^{-5}	RPS - WASH-1400
	15	19	1.0	
	15	20	1.7×10^{-5}	RODS - 3 rods fail to insert, WASH-1400
	16	17	1.0	
	16	18	1.2×10^{-5}	MAN/SCRAM - switch and circ. breaker (1-of-2 twice), 1.0×10^{-5} and 1.0×10^{-3}, IREP
	17	19	1.0	
	17	20	1.7×10^{-5}	RODS

Figure (Cont)	Node to Node		Probability	Description
2	18	21	1.0	
	18	22	1.0×10^{-2}	OE
	19	AE	1.0	
	20	21	1.0	

	20	22	1.0×10^{-2}	OE
	21	AF	1.0	
	22	AG	1.0	
3	AH	38	1.0	
	AH	39	4.8×10^{-4}	LOSP - 24 hours, 2.0×10^{-5}/hr, WASH-1400
	38	43	1.0	
	38	44	1.4×10^{-3}	RUN/SUPP - 1-of-2 trains, pump, 24 hours, 3.0×10^{-5}/hr, IREP
	38	45	1.0×10^{-5}	RUN/SUPP - 2-of-2 trains, "common mode"
	39	40	1.0	
	39	41	7.2×10^{-2}	DIESEL - 1-of-2 diesels, start, run 1 hour, battery (30 days), 2 check valves, MOV, 3.6×10^{-2}, IREP
	39	42	1.0×10^{-2}	DIESEL - "common mode", WASH-1400
	40	43	1.0	
	40	44	3.6×10^{-3}	START/SUPP - 1-of-2 trains, pump, run 24 hours, start, check valve, 1.8×10^{-3}, IREP
	40	45	1.0×10^{-5}	START/SUPP - 2-of-2 trains, "common mode"
	41	44	1.0	
	41	45	1.8×10^{-3}	START/SUPP - 1-of-1 train
	42	45	1.0	
	43	AI	1.0	
	44	AJ	1.0	
	45	AK	1.0	
4	AL	27	1.0	
	AL	28	3.6×10^{-5}	RPS - ESFAS similar assumption
	27	31	1.0	

Figure (Cont)	Node to Node		Probability	Description
4	27	32	1.0×10^{-5}	FULL Support - Pump - 4-of-4, run, start, 2 MOV, 2 check valves, 4.0×10^{-3},

			IREP, "common mode"
27	32	1.6×10^{-5}	HALF Support - Pump - 2-of-2
28	29	1.0	
28	30	1.1×10^{-4}	MAN/SWITCH - switch, relay, 1.0×10^{-5}, 1.0×10^{-4}, IREP
29	31	1.0	
29	32	1.0×10^{-5}	FULL Support - Pump - 4-of-4, "common mode"
29	32	1.6×10^{-5}	HALF Support - Pump - 2-of-2
30	33	1.0	
30	34	1.0×10^{-5}	FULL Support - Pump - 4-of-4, "common mode"
30	34	1.6×10^{-5}	HALF Support - Pump - 2-of-2
31	AM	1.0	
32	33	1.0	
32	34	1.0×10^{-5}	FULL Support - Pump - 4-of-4, "common mode"
32	34	1.6×10^{-5}	HALF Support - Pump - 2-of-2
33	AM	1.0	
34	AN	1.0	
AO	50	1.0	
AO	51	1.2×10^{-3}	RVS - 1-of-4, 3.0×10^{-4}, IREP
50	52	1.0	
50	53	1.0×10^{-5}	FULL Support - Pump - 3-of-3, "common mode"
50	53	2.8×10^{-5}	HALF Support - Pump - 2-of-2
51	52	1.0	
51	53	1.0×10^{-5}	FULL Support - Pump - 3-of-3, "common mode"
51	53	2.8×10^{-5}	HALF Support - Pump - 2-of-2
52	54	1.0×10^{-2}	OE
52	57	1.0	

Figure (Cont)	Node to Node	Probability	Description

5	53	AP	1.0	
	54	AQ	1.0	
	57	59	1.0	
	57	60	1.0×10^{-2}	OE
	59	AS	1.0	
	60	AT	1.0	
6	AU	64	1.0	
	AU	65	1.0×10^{-2}	OE
	64	66	1.0	
	64	67	0	Assumption
	65	AV	1.0	
	66	69	3.0×10^{-2}	RV/CLOSE - 1-of-3, 1.0×10^{-2}, IREP
	66	70	1.0	
	67	AW	1.0	
	69	AX	1.0	
	70	AW	1.0	
7	AY	74	1.0	
	AY	75	1.0×10^{-2}	OE
	74	AZ	1.0	
	75	77	1.0	
	75	78	1.0×10^{-2}	OVER/RUP - estimate
	75	79	0	Assumption
	77	80	1.0	
	77	81	1.0×10^{-2}	RV/CLOSE
	78	BC	1.0	
	79	BA	1.0	
	80	BB	1.0	
	81	BC	1.0	
8	BD	74	1.0	
	BD	75	1.0×10^{-2}	OE
	74	77	1.0	
	74	78	1.0×10^{-2}	OVER/RUP
	75	77	1.0	
	75	78	1.0×10^{-2}	OVER/RUP

Figure (Cont)	Node to Node		Probability	Description
8	77	80	1.0	
	77	81	1.0×10^{-2}	RV/CLOSE
	78	8F	1.0	
	78	8G	1.0	
	80	8E	1.0	
	80	8H	1.0	
	81	8F	1.0	
	81	8G	1.0	
9	8I	91	1.0	
	8I	92	1.6×10^{-5}	FULL Support - Pump - 2-of-2
	8I	92	4.0×10^{-3}	HALF Support - Pump - 1-of-1
	91	8J	1.0	
	92	8K	1.0	
10	8L	96	1.0	
	8L	97	3.5×10^{-4}	INSTR - 350 hr inspection interval, 1.0×10^{-6}/hr, IREP
	96	97	1.0×10^{-2}	OE
	96	102	1.0	
	97	98	1.0	
	97	99	1.1×10^{-2}	INSTR/CAL
	98	99	1.0×10^{-2}	OE
	98	102	1.0	
	99	100	1.0	
	99	101	1.1×10^{-2}	INSTR/CAL
	100	101	1.0×10^{-2}	OE
	100	102	1.0	
	101	8M	1.0	
	102	104	1.0	
	102	105	1.0×10^{-3}	MOV-IREP
	104	8N	1.0	
	105	8O	1.0	
11	8P	108	1.0	

	BP	109	1.6×10^{-5}	FULL Support - Pump - 2-of-2
	BP	109	4.0×10^{-3}	HALF Support - Pump - 1-of-1

Figure (Cont)	Node to Node		Probability	Description
11	108	110	1.0	
	108	111	2.0×10^{-3}	MOV - 2
	109	BQ	1.0	
	110	113	1.0	
	110	114	3.0×10^{-3}	MOV - 3
	111	BR	1.0	
	113	BS	1.0	
	114	BT	1.0	
12	BU	119	1.0	
	BU	120	1.0×10^{-2}	RV/CLOSE
	119	BV	1.0	
	120	BW	1.0	
13	BX	124	1.0	
	BX	125	1.0×10^{-2}	Assumption
	BX	BZ	1.0	
	124	BY	1.0	
	125	BZ	1.0	
14	CA	129	1.0	
	CA	130	1.0×10^{-2}	Assumption
	CA	CC	1.0	
	129	CB	1.0	
	130	CC	1.0	
15	CD	50	1.0	
	CD	51	1.2×10^{-3}	RVS
	50	52	1.0	
	50	53	1.0×10^{-5}	FULL Support - Pump - 3-of-3
	50	53	2.8×10^{-5}	HALF Support - Pump - 2-of-2
	51	52	1.0	
	51	53	1.0×10^{-5}	FULL Support - Pump - 3-of-3
	51	53	2.8×10^{-5}	HALF Support - Pump - 2-of-2
	52	CE	1.0	
	52	CG	1.0	
	53	CF	1.0	

Table 5. Network Data Base Summary.

Figure	Node to Node		Full	Half*
1	AA	AB	1.0	
	AA	AC	4.4×10^{-4}	
2	AD	AE	1.0	
	AD	AF	1.7×10^{-5}	
	AD	AG	1.7×10^{-9}	
3	AH	AI	1.0	
	AH	AJ	1.4×10^{-3}	
	AH	AK	4.8×10^{-6}	
4	AL	AM	1.0	
	AL	AN	1.0×10^{-10}	2.6×10^{-10}
5	AO	AP	1.0×10^{-5}	2.8×10^{-5}
	AO	AQ	1.0×10^{-2}	
	AO	AR	1.2×10^{-5}	
	AO	AS	1.0	
	AO	AT	1.0×10^{-2}	
6	AU	AV	1.0×10^{-2}	
	AU	AW	1.0	
	AU	AX	3.0×10^{-2}	
7	AY	AZ	1.0	
	AY	BA	0	
	AY	BB	1.0×10^{-2}	
	AY	BC	2.0×10^{-4}	
8	BD	BE	1.0	
	BD	BF	2.0×10^{-2}	
	BD	BG	2.0×10^{-4}	
	BD	BH	1.0×10^{-2}	

9	BI	BJ	1.0	
	BI	BK	1.6×10^{-5}	4.0×10^{-3}

*If not entered it equals FULL

Figure (Cont)	Node to Node		Full	Half
10	BL	BM	4.4×10^{-6}	
	BL	BN	1.0	
	BL	BO	1.0×10^{-3}	
11	BP	BQ	1.6×10^{-5}	4.0×10^{-3}
	BP	BR	2.0×10^{-3}	
	BP	BS	1.0	
	BP	BT	3.0×10^{-3}	
12	BU	BV	1.0	
	BU	BW	1.0×10^{-2}	
13	BX	BY	1.0	Feed & Bleed
	BX	BZ	1.0×10^{-2}	Feed & Bleed
	BX	BY	0	No Feed & Bleed
	BX	BZ	1.0	No Feed & Bleed
14	CA	CB	1.0	ATWS Response
	CA	CC	1.0×10^{-2}	ATWS Response
	CA	CB	0	No ATWS Response
	CA	CC	1.0	No ATWS Response
15	CD	CE	1.0	
	CD	CF	1.0×10^{-5}	2.8×10^{-5}
	CD	CG	1.2×10^{-3}	

Table 6. Results Summary

Core Melts

Description	Node	Probability Given SGTR For Low Response Plant	High Response Plant*	WASH-1400 Release Category
Total Power Loss	AK	4.8×10^{-6}	4.8×10^{-6}	4
Low Makeup – No Isolation	AN	0	0	
Recriticality	BA	0	0	
PORV LOCA – No Response	BM	1.3×10^{-7}	1.3×10^{-7}	5
PORV LOCA – RHR Inj Fails	BQ	0	0	
PORV LOCA – RHR Recirc Fails	BR	8.0×10^{-8}	8.0×10^{-8}	5
AFW Failure	BZ	1.0×10^{-5}	1.0×10^{-7}	4
ATWS	CC	1.0×10^{-9}	0	4
AFW Failure – No SI	AP	0	0	
Low Makeup – No Isolation	AQ	0	0	
Low Makeup – No Isolation	AR	0	0	
Totals Category 4		1.5×10^{-5}	4.9×10^{-6}	
Totals Category 5		2.1×10^{-7}	2.1×10^{-7}	

*Low response plant cannot feed & bleed and cannot survive ATWS.
High response plant can feed & bleed and can survive ATWS.

Table 6. Results Summary (Continued).

Description	Dominant End Node	Dominant End Modes	Probability Given SGTR For Low Response Plant	Probability Given SGTR For High Response Plant	Release
High Press Pri - Sec LOCA	BF	BJ, BK	8.1×10^{-4}	8.1×10^{-4}	Major
High Press Pri - Sec LOCA-Feed	BG.	BJ, BK	8.1×10^{-6}	8.1×10^{-6}	Major
PORV Like LOCA -Unisol CMT	BT	BT	9.0×10^{-8}	1.2×10^{-7}	Major
High Press Pri - Sec RV Use	BE	BJ, BK	4.0×10^{-2}	4.0×10^{-2}	Minor
High Press Pri - Sec RV Use-Feed	BH	BJ, BK	4.0×10^{-4}	4.0×10^{-4}	Minor
Low Press Pri - Sec LOCA-Feed	BC	BJ, BK	2.0×10^{-4}	2.0×10^{-4}	Minor
PORV Like LOCA - Isol CMT	BS	BS	3.1×10^{-5}	4.1×10^{-5}	Minor
Totals Major			8.2×10^{-4}	8.2×10^{-4}	
Minor			4.1×10^{-2}	4.1×10^{-2}	