Received w/Ltr Dated 12/9/82

VALUE-IMPACT ANALYSIS OF RECOMMENDATIONS CONCERNING STEAM GENERATOR TUBE DEGRADATIONS AND RUPTURE EVENTS

J. H. Morehouse
R. T. Liner
B. W. Johnson
J. F. Wimpey

DRAFT FINAL REPORT

September 23, 1982

Science Applications, Inc.
1710 Goodridge Drive
McLean, Virginia 22102

Prepared for

Division of Licensing
Office of Nuclear Reactor Regulation
U.S. Nuclear Regulatory Commission
Washington, D.C. 20555

Contract NRC-03-82-131

IDHC-5
INFO LTR

XA

8211220096

157/27

XA Copy Has Been Sent to PDR

ACKNOWLEDGEMENTS

Due to the short time available for this effort and the number of disparate topics to be addressed, it was necessary to have a large number of contributors to this report. These contributors included the SAI task leaders: Rich Belanger, Mike Gross, Pete Lobner, Betsy Parker, John Stokley, and Frank Wimpey. The persons responsible for the specialist areas of cost, probabilities and radiation exposure were Jeff Conopask, Paul Amico and Rich Belanger (again), respectively. The QA/review team included Bryce Johnson, Bob Liner, and George Freund. The development of the public risk section entirely the work of Bill Horton. The project manager was Jeff Morehouse. The hardest workers, Darlene Rytter, Judy Hamilton and Pat Hough, typed and produced this project.

The NRC project team, which was in an integral part of this V-I analysis effort was directed by Gus Lainas and Tom Ippolito. The daily contact and coordination between SAI and NRC was handled by Bob Martin. Much of the specific knowledge gained was via the efforts and experiences of Gary Holahan, Tad Marsh, Emmett Murphy and Keith Wichman. Harley Silver was instrumental in focusing the SAI/NRC efforts. The SAI team thanks the above and many other, NRC personnel for their openly-given help in this project.

FOREWORD

This report presents a value-impact analysis of twelve regulatory requirements related to steam generators which are under consideration by the NRC staff for imposition on the operators of pressurized water reactors. The purpose of the analysis is to assist the NRC staff in preparation and support of its petitions for approval to the Committee for the Review of Generic Requirements, to other NRC organizations, and to the Commission itself.

The tube rupture event at the Ginna plant on January 15, 1982 was the immediate impetus for these requirements. However, the Director of the Office of Nuclear Reactor Regulations, in directing the preparation of these requirements, intended that they also encompass actions appropriate to the resolution of unresolved steam generator issues that have been outstanding for a long time, in particular Unresolved Safety Issues A-3, A-4, and A-5.

The requirements addressed here were originally described in the draft report "NRC Recommendation Concerning Steam Generator Tube Degradation and Rupture Events". Subsequent modifications were stated in an NRC memorandum concerning a meeting with the Steam Generator Owner's Group and other industry representatives and in NRC working papers. These latter documents defined the requirements as they are analyzed here. SAI analysts attended the meeting between NRC and the industry as observers and have had many meetings and interactions with the NRC staff in the course of the analysis.

It should be noted that the requirements addressed herein are only a subset of the total set of requirements being proposed. Since the values and impacts of various requirements are not necessarily independent, some further analysis may eventually be needed.

SAI undertook to perform this analysis in a very short time (about 10 weeks) relative to the complexity and scope of the issues involved. It was necessary to focus heavily on three areas of values and impacts that were perceived at the outset to be of greatest importance. These were risk of radiation exposure to the public, occupational exposure to plant workers, and economic benefits and costs to the utilities operating the affected plants. We also present many of our results on the basis of a "represenative" plant described by industry-average paramenters and 25 years remaining life; whenever possible, however, we attempt to show the variability of values and impacts among plants. Although additional time would have allowed more attention to detail, we don't believe it would have had much effect on our conclusions and recommendations.

EXECUTIVE SUMMARY

1.0 STUDY PURPOSE AND SCOPE

The NRC[1] has proposed twelve general action items to be imposed upon PWR licensees in order to improve steam generator performance relative to leakage and tube rupture rates. These items have been evaluated on the basis of a value-impact analysis[2] using three major criteria of evaluation: economic benefits and costs, public risk, and occupational radiation exposure.

2.0 APPROACH

The analysis has been quantified to the extent possible by the use of available data. The limits on effectiveness of the proposed actions have been established by historical data. That is, the proposed actions have been related to the known historical failure modes to establish the maximum range of effectiveness of these proposed actions.

Consideration has been given to the effect of combinations of proposed actions and the marginal benefits of individual actions within combinations. Finally, expert opinion from within the nuclear industry and the NRC has been factored into the conclusions drawn in this report.

---

(1) T. Ippolito (NRC) to G. C. Lainas (NRC), Memorandum, "Forthcoming Meeting with Steam Generator Owners Group - Proposed Generic Requirements", July 22, 1982.

(2) S. H. Hanauer (NRC) to NRR Division Directors (NRC), Letter transmitting "Procedures for Transmitting New Generic Requirements to the CRGR; Enclosure 2: NRR Office Letter No. 16, Revision 1," Instructions for the Preparation of Value-Impact Analyses", February 23, 1982.

3.0 MAJOR CONCLUSIONS

Cost has emerged as the most significant evaluation criterion. Cost variation among the proposed actions is significant, and significant cost savings can be realized with the more promising actions.

Public risk from steam generator tube rupture was assessed and found to be so low that it has a completely negligible contribution to the value-impact comparisons.

Occupational radiation exposure can be significant and for most of the actions has a generally favorable value-impact ratio, but for evaluation purposes it is not generally significant compared to costs.

Of the actions evaluated the secondary water chemistry program proved to be the most effective. The secondary side QA and visual inspection for loose parts and improved steam generator inservice inspection programs, including eddy current testing, are also effective. These results are quantified in the next section.

4.0 RESULTS

Table 1 summmarizes the net benefits of all the proposed actions. Generally the demarcation between effective and ineffective actions is very clear. Essentially there are no questionable actions based purely on value-impact.

Those which are preventive (1 and (5,6)) and those which are diagnostic-preventive, meaning that prevention is contingent upon successful diagnosis of an incipient flaw (items 2, 3 and 4), are generally more effective than those which are primarily or exclusively mitigative (8, 9, 11 and 12) or those which are studies (7 and 10). With the exception of 4, upper inspection ports (and the LPMS portion of 1b, which is ineffective in a marginal sense), all ineffective proposed actions are mitigative or study type. If the preferred actions are implemented then the marginal benefits of implementing mitigative actions decrease even further because their benefits depend on a minimum rate of undesirable events. Therefore, there is added justification for their exclusion from implementation.

The marginal benefits of implementing any additional actions decrease, of course, with each addition. Table 1 shows the effect of the combined implementation of all six preventive or preventive-diagnostic type actions, and this is compared with the combination of the four most effective proposed actions. The four actions (secondary side ISI and QA for loose parts, general ISI, improved eddy current testing, and secondary water chemistry program combined with condenser ISI) provide essentially the same total economic benefits available from the twelve proposed actions.

Executive Summary Table 1
Effectiveness of Proposed Actions

Proposed Actions[a]	Net Benefit[b] ($ 10^6)	Effectiveness/Comments
1 a. Secondary Side Inservice Inspection and QA for Loose Parts	2.5	Very Effective
b. Secondary ISA, QA and Loose Parts Monitoring System (LPMS)	2.2 - 2.7	LPMS independently effective but not recommended since marginal improvement over 1a, above, is negligible or negative
2. Inservice Inspection		
a. Full-length tube ISI	4.1 - 4.4	Generally these are very effective
b. 48-month ISI interval	-	
c. Supplemental Sampling	1.1 - 5.4	
d. Denting monitoring	-	
e. Unscheduled ISI	0.4	
f. Reporting	-	
3. Improved Eddy Current Testing Techniques	0 - 5.5	Can be very effective
4. Upper Inspection Ports (UIP)	Negligible	Ineffective or marginal at best (even for SGs in fabrication)

a These are described in Reference 1 of this summary and in detail in Section IV of the main report.

b Cost dominates value-impact results relative to ORE and public risk.

Executive Summary Table I (Continued)

Proposed Action[a]	Net Benefit[b] ($ 10^6)	Effectiveness/Comments
5. (With 6) Secondary Water Chemistry Program (SWCP) combined with Condenser Inservice Inspection Program (CISIP)	40-240	This is the most effective of the proposed actions
7. Tube stabilization and monitoring (Study)	Not applicable	Ineffective
7. Implementation of Results of above study	Slightly negative	
8. Primary to Secondary Leakage limits	Negligible or negative	Marginal or ineffective
9. Coolant Iodine Limits	Negligible	Ineffective
10. Reactor Coolant System Pressure Control (Study)	Not applicable	Ineffective
10. Implementation of Results of above study	Negligible	
11. Safety Injection Signal Reset	Negative	Ineffective
12. Containment Isolation and Reset	Negative	Ineffective

a These are described in the in Reference 1 of this summary and in detail in Section IV of the main report.

b Cost dominates value-impact results relative to ORE and public risk.

Executive Summary Table 1 (Continued)

Combinations of Proposed Actions[a]	Net Benefit[b] ($ 10^6)	Effectiveness/Comments
Items Ia, Ib, 2, 3, 4 and (5, 6) above, in combination	Up to 48-258	These are all the preventive type actions
Items 1a, 2, 3 and (5, 6) above, in combination	Up to 48-258	These four actions provide essentially all the net benefit available

a These are described in Reference 1 of this summary and in detail in Section IV of the main report.

b Cost dominates value-impact results relative to ORE and public risk.

TABLE OF CONTENTS

SECTION I. INTRODUCTION

This introduction is intended to present the reader with background information concerning both the value-impact analysis itself and the subject of the analysis, steam generator tube rupture (SGTR). Each of the subsections below is exerpted verbatim from the referenced NRC documents.

I.0 VALUE-IMPACT ANALYSES*

Value-impact analyses shall be performed for each significant change in regulatory requirements to demonstrate that all significant alternatives and considerations were identified and weighed. The alternatives and considerations to be weighed include all the values to be gained, such as contribution to public health and safety and reduction in environmental damage, and all the impacts that result, such as increased risk to plant operators, increased environmental damage and increased costs. A value-impact analysis should not be construed to mean that cost considerations take precedence over considerations of health, safety, or national security. These factors remain paramount. Cost, however, is an important factor in many regulatory matters and must be a prime consideration when there are alternative means of achieving desired levels of health, safety and national security.

Value-impact analysis as interpreted by the staff is essentially a technique equivalent to benefit and cost analysis, or cost effectiveness analysis. The term value-impact was introduced at NRC to dispel certain connotations associated with the other terms. Benefit-cost analysis, in particular, is often misconceived as a process of reducing all factors to a common dollar form. This, the staff felt, was too restrictive, and therefore the terms value and impact were recommended and designed to

---

* Excerpted verbatim from Article 1 - Statement of Work, Contract No. NRC-03-82-131, "Instructions for the Preparation of Value-Impact Analyses, NRR Office Letter No. 16, Revision 1"; Enclosure 1, pp. 1-2.

include noncommensurables, and variables that are nonquantifiable or nonmeasurable. Thus, it was believed that the new terms would allow for analysis to incorporate very important but nonquantifiable judgments of the staff and other expert parties. It should be noted, however, that cost-benefit and cost-effectiveness analyses, properly conducted, have just as broad a scope as that envisioned by the staff for value-impact analysis.

Proposed actions to which these instructions apply include the issuance of ..... new and amended Regulations, and Commissions papers involving a potential change in regulatory requirements or policy ..... However, licensing reviews for CPs and OLs have, in the past, exhibited a tendency for escalating regulatory requirements through reinterpretation of rules, guides and review procedures. Such escalations sometimes have a considerable impact with little perceptible gain in plant safety. To control this tendency, all significant deviations or departures should be subjected to value-impact analysis just as though they were proposed new guides or branch positions. The fact that they are applied on case reviews is not cause for exemption.

2.0 STEAM GENERATOR DEGRADATION*

Degradation of steam generators (SG) manufactured by each of the three pressurized water reactor (PWR) vendors has resulted from a combination of steam generator mechanical design, thermal hydraulics, materials selection, fabrication techniques, and secondary system design and operation. To date, many different forms of steam generator degradation have been identified, including: stress corrosion cracking, wastage, intergranular attack, denting, erosion-corrosion, fatigue cracking, pitting, fretting, support plate degradation, and mechanical damage due to impingement of foreign objects or loose parts on steam generator internal components. One or more of these forms of degradation have affected at least 40 operating PWRs and have resulted in extensive SG inspections, tube plugging, repair or replacement.

---

* Exerpted verbatim from Article 1 - Statement of Work, Contract No. NRC-03-82-131, "Value-Impact Analysis of Recommendations Concerning Steam Generator Tube Degradations and Rupture Events"; contract with Science Applications, Inc.

The majority of the SG tube failures that have occurred under normal operating conditions were small stable leaks sometimes requiring plant shutdown, inspection, and corrective actions, but for the most part small enough (e.g., below technical specification leak rate limit) that operations continued until a scheduled shutdown. However, four significant SG tube ruptures have occurred in domestic PWRs since 1975. These events occurred on February 26, 1975, at Point Beach Unit I; September 15, 1976, at Surry Unit 2; October 2, 1979, at Prairie Island; and on January 25, 1982, at R. E. Ginna.

The first three of these events were evaluated in NUREG-0651, "Evaluation of Steam Generator Tube Rupture Events". The report includes an evaluation of system response, operator action, and radiological consequencies during the three events.

The leak rate associated with these events ranged from about 80 gpm to 390 gpm. The conclusion of the report is that no significant offsite doses or systems inadequacies occurred during the tube rupture events analyzed. However, the potential for more significant consequences was recognized and a number of recommendations, primarily related to plant Emergency Procedures, were made to correct the deficiencies that were noted.

The event at the Ginna plant was addressed in NUREG-0909 "NRC Report on the January 25, 1982 Steam Generator Tube Rupture at R. E.. Ginna Nuclear Power Plant", April 1982 and evaluated in NUREG-0916 "Safety Evaluation Report Related to the Restart of R. E. Ginna Nuclear Power Plant", May 1982. NUREG-0909 includes descriptions of the event, and significant staff findings, while NUREG-0916 is an evaluation of system response, operator response, steam generator inspection analysis and repair programs, emergency preparedness and a radiological assessment. The maximum leak rate estimated by the staff to be associated with the Ginna event was about 760 gallons per minute.

An overall update on steam generator tube experience was provided in NUREG-0886, "Steam Generator Tube Experience", February 1982, which provides an overview of the types of problems which have occurred in steam generators with particular emphasis on recent operating experience. In addition, the report addressed the status of resolution of unresolved safety

issues (TAP's A-3, A-4, and A-5) related to steam generator tube problems and discussed the short and long term corrective actions being pursued by the industry, and the inspection and repair requirements which were established to ensure continued safe plant operator and the associated radiation exposures.

The objective of TAP A-3, A-4, and A-5 was to integrate studies of system analyses, inservice inspection and tube integrity to establish improved critaria for ensuring adequate tube integrity and safe generator operation.

Following the occurrence of the steam generator tube rupture at the Ginna plant the Director of the Office of Nuclear Reactor Regulation requested appropriate NRC organizations to review the NUREG-0909 report and identify requirements and criteria for implementation of PWRs.

As a result of this assessment, which also considered the matters addressed in the reports discussed above, the NRC staff has prepared the report "NRC Recommendations Concerning Steam Generator Tube Degradations and Rupture Events" (Report) to set forth certain requirements which the staff concludes should be evaluated with respect to their applications to all operating pressurized water reactors for the purpose of minimizing the degradation of steam generator tubes and mitigating the consequences of tube rupture events. The Report also identifies recommendations on specific criteria to satisfy the requirements.

The Report further outlines an Implementation Plan which covers the entire process of application of the requirements, including consideration of schedules, cost, and impact of such implementation.

SECTION II - OBJECTIVES AND SCOPE

This section describes the overall project objective and scope. The specific objectives associated with the various areas of project concern are also presented.

1.0 OVERALL PROJECT

In support of the overall NRC staff objective of minimizing steam generator tube degradation and mitigating the consequences of tube rupture events, the goal of this project is to support the implementation of the Draft Report ("NRC Recommendations Concerning Steam Tube Degradations and Rupture Events") requirements by defining the criteria more sharply through verification of the staff's qualitative judgements of the values and impacts of the requirements and criteria set forth in the Report.

Specifically, this project has prepared a value-impact analysis of twelve proposed requirements contained within the above NRC Report. These twelve specific requirements addressed are:

- Prevention and Detection of Loose Parts or Foreign Objects
- Stabilization and Monitoring of Degraded Tubes
- Inservice Inspection Requirements
- Improved Eddy Current Techniques
- Primary to Secondary Leakage Limits
- Upper Inspection ports
- Reactor Coolant System Pressure Control
- Secondary Water Chemistry Program
- Condenser Inservice Inspection
- Safety Injection Signal Reset
- Containment Isolation and Reset
- Standard Technical Specification Limit for Coolant Iodine Activity

The value-impact analysis was conducted in accordance with the reference* below, except that only the portions of the analysis indicated below were to be performed:

- Brief description of proposed action.
- Summary of the values and impacts included in the discussion of the need for the proposed action.
- Value-impact analysis is to be confined to discussion of:
  - short-term and ongoing tasks to be performed by NRC
  - industry effects
  - public effects.
- Quantitative discussion of the proposed implementation plan.

While the project value-impact scope was limited to the above areas, it should also be noted that the twelve proposed requirements were also a subset of the total proposed actions recommended in the NRC Report.

2.0 SPECIFIC AREAS

In support of the value-impact analysis of the twelve requirements, it was necessary to estimate the public risk associated with a steam generator tube rupture (SGTR), as measured by core melt probability and by expected consequences.

For each of the proposed requirements, the primary focus on values and impacts was in the areas of:

- Event probability change
- Cost
- Radiation exposure

---

* Letter from S. H. Hanauer to NRR Division Directors dated February 23, 1982, subject: Procedures for Transmitting New Generic Requirements to the CRGR; Enclosures 2: NRR Office Letter No. 16, Revision 1, "Instructions for the Preparation of Value-Impact Analyses".

In preparing the value-impact analysis, the project grouped recommendations which could and should be done as a package. Also, separate analyses were appropriate in several instances for plants with nuclear steam generator systems from different vendors, and for plants where backfit and/or forefit of individual recommendations were required.

SECTION III. APPROACH AND BASELINE DATA

This section presents the overall approach taken in the value-impact assessment of the proposed requirements. Also presented are the baseline data used for the statistical analysis, cost analysis, and dose determinations. The final subsection presents an assessment of the risk to the public from a SGTR event.

I.0 APPROACH

The approach taken by SAI in evaluating the proposed requirements was based on the NRC Office Letter No. 16, Revision 1 from H.R. Denton entitled "Instructions for the Preparation of Value-Impact Analyses". Due to the short time period available for the assessment, three major items of a value-impact analysis (public risk, cost, occupational dose) were the focus of the project.

1.1 GENERAL APPROACH

Figure III.1-1 summarizes our general approach to this project. The various requirements under study were grouped into six tasks described in the next section. For each of these tasks the preliminary activities consisted of mainly organizing the project and gathering the necessary information. Within each task, an investigation of impacts and values of the particular requirements were then performed. The final report box shown on the figure consists of analyzing the results of the value-impacts for each task and providing a report. The on-going meetings were used as a mechanism for supporting utilization of the analysis results of the various tasks, and frequent review of results of the various tasks throughout the project provided the necessary quality assurance.

Due to the short period of performance of the value-impact analysis, the work on the evaluation of the proposed requirements was concurrent. The approach to the work was structured with internal "specialists" who performed similar functions in each of the task areas (i.e., costing, probabilistic assessment, dose determination). Thus, Task managers referred information and data to the specialists who were

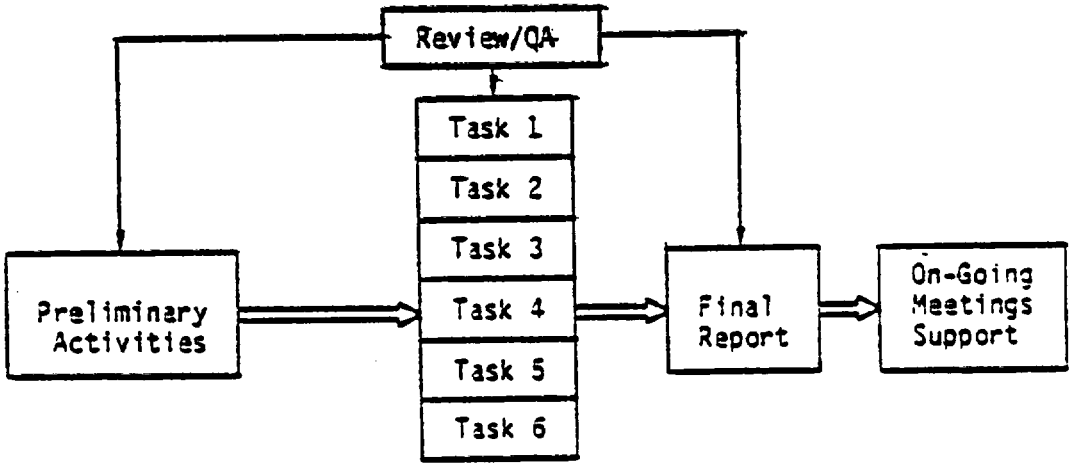

Figure III.1-1. Overall Approach to Project

responsible for establishing baseline project data. The use of this approach ensured a consistent basis for simultaneous work which is otherwise hard to correlate.

I.2 TASK APPROACH

The twelve requirements were grouped into six tasks in order to facilitate common data gathering and management. The six tasks grouped the requirements as follows:

- Task 1: Loose Parts
- Task 2: Tube Stabilization and Monitoring
- Task 3: (Inspection Grouping)
  - Steam Generator Inservice Inspection
  - Eddy Current Techniques
  - Upper Inspection Ports
- Task 4: (Specification Limits)
  - Iodine Activity
  - Primary to Secondary Leakage
- Task 5: (Plant Systems)
  - Reactor Coolant System Pressure
  - Safety Injection Signal Reset
  - Containment Isolation Reset
- Task 6: (Secondary Side)
  - Secondary Water Chemistry Program
  - Condenser Inservice Inspection

Each of these six tasks produced a value-impact analysis on each of it's requirements. The approach to each task was as shown in Figure III.1-2. The "technical review" work was handled by the Task Manager and included:

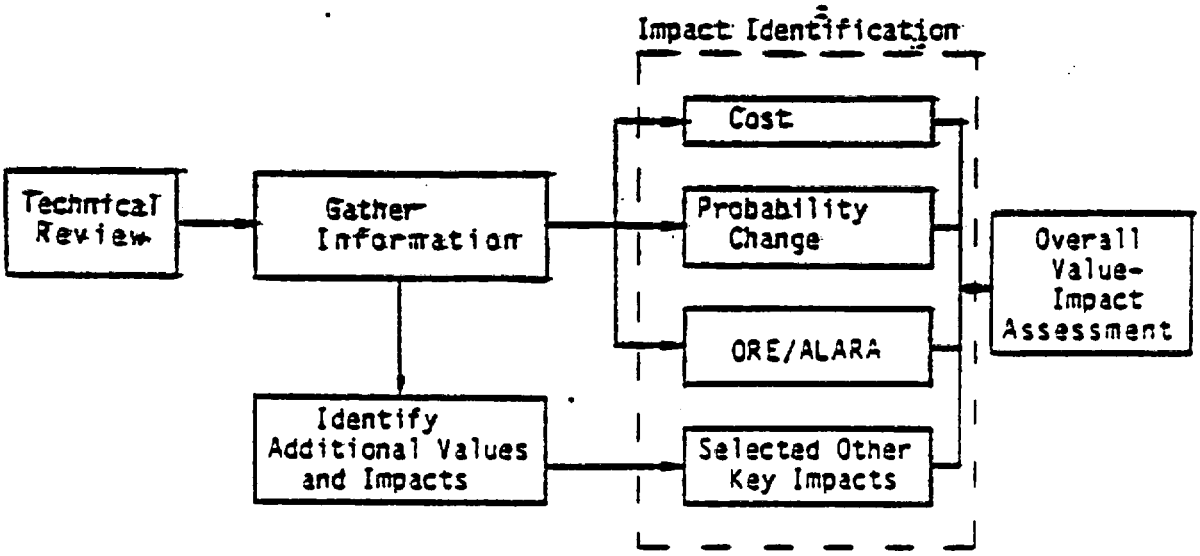

Figure III.1-2. Approach to Six Specific Tasks

- Establishing NRC technical contacts
- Obtaining key documents
- Reviewing background material

The "Gather Information" phase refers to other studies and analyses deemed important concerning the main impact areas to be investigated: cost, change in event probability and radiation exposure. The information gathered included the following actions:

- Obtaining equipment performance/history data
- Obtaining equipment and labor cost data
- Assembling information on each of the three value-impact areas.

The identification of other key impact areas was covered as completely as time allowed. SAI included and referenced all items to the best of its ability and within the time allowed.

1.2.1 Public Risk Assessment Task

A special task was established to address the risk to the public of SGTR. The purpose of this task was to estimate the public risk, as measured by core melt probability and by expected consequences, associated with a steam generator tube rupture as an initiating event. The approach was to perform a "scoping level" network-type analysis. Analogies and comparisons with previous PRAs were freely used; the idea was to focus as quickly as possible on dominant sequences and to rely on previous studies (WASH-1400, IREP, etc.) as much as possible for estimating probabilities. Use of sophisticated computer codes for accident progression phenomenology or for consequence calculations was not utilized, nor was extensive and detailed fault tree analysis. Where plant specificity was necessary, a single particular plant was selected. The results of this effort are presented in Section III.5 and Appendix B.

1.2.2 Baseline Data

The purpose of these efforts was to establish a common data basis for all the tasks. This common basis is required if the overall value-

impact analysis is to overview all of the proposed report recommendations and requirements.

The baseline development was implemented in the areas of the specific impact investigation: cost, probability, and radiation dosage. The "specialist" in each of these three areas was required to establish the baseline in his area. The baseline data is presented in the three subsections following this one.

2.0 PROBABILITIES AND STATISTICS OF STEAM GENERATOR EVENTS

A summary and analysis of data pertaining to steam generator tube plugging, leaks and ruptures is presented. The purpose is to extract from this data information on the frequencies and probabilities of various events as called for by the analytical framework chosen for the value-impact assessment. All of the data used are from Reference 1. The information desired is:

- the frequencies (events per reactor year) of forced outages due to various modes of tube degradation, by NSSS vendor

- the frequencies of tube ruptures (with leak rates exceeding the makeup capacity of the charging pumps) due to various modes of tube degradation, by NSSS vendor

- the rate of tube plugging (% of tubes plugged per year) by degradation mode and by NSSS vendor.

Forced outages are of interest because they reduce plant availability. Ruptures are of concern because they challenge plant systems and operators and are therefore potential initiators of accidental radioactivity releases. Tube plugging rates are important because they could affect a plant's power rating and steam generator lifetime. The important values of the proposed preventive requirements with steam from their reduction of these frequencies and rates.

All of the statistical information directly needed for the analysis is presented in this section. Summaries of the basic data used for deriving the desired information are presented in Appendix A. An aggregate summary of the event data by NSSS vendor is shown in Table III.2-1 below for leaks and ruptures.

An aggregate summary of event data by degradation mode for all PWRs is shown in Table III.2-2. These data for all PWRs are dominated by the Westinghouse plants primarily because they collectively have a much longer operating history than the others.

Table III.2-1 Aggregate Summary of Leak and Rupture Data by NSSS Vendor (LR is leak rate in gallons per minute)

Vendor	Reactor Operating Years*	Number of Events (Leaks and Ruptures)				
		LR<0.1	0.1<LR<0.3	0.3<LR<RUP	RUPTURE	TOTAL
Westinghouse	240 (180)	50	20	21	4	95
Combustion Engr.	61 (45)	2	2	2	0	6
Babcock & Wilcox	52 (38)	0	8	13	0	21
Totals	353 (263)	52	30	36	4	122

* Numbers in parentheses do not include first two years of plant life.

As noted in the tables, leak and rupture events are divided into four categories according to the leak rate (LR) in gallons per minute (gpm). As already indicated, ruptures are defined in terms of the makeup capacity of the charging system, which varies from plant to plant. To date, only four events have been classified as ruptures. All occurred in Westinghouse plants, the latest being the Ginna event of January 1982. Leak rates ranged from about 80 gpm to 760 gpm. These events are discussed in References 2, 3 and 4.

Leaks in the next lowest category range from 0.3 gpm up to ruptures. The lower limit is the technical specification limit above which a plant must shutdown, repair the leak and perform a tube inspection. The 0.1 gpm rate dividing the two lowest categories was chosen arbitrarily. Most leaks are in the lowest category.

Table III.2-2 Aggregate Summary of Leak and Rupture Event by Degradation Mode for All PWRs (353 Total Operating Years, 263 Mature Operating Years)

Degradation Mode	Number of Events (Leaks and Ruptures)				
	LR<0.1	0.1<LR<0.3	0.3<LR<RUP	RUPTURE	TOTAL
Wastage	13	2	2	1	18
Cracking	27	7	7	1	42
IGA	9	3	2	0	14
Pitting/Fretting	2	1	1	0	4
Incorrect Plug Loc.	0	1	0	0	1
Tube Sheet Damage	0	1	0	0	1
Denting	5	8	1	0	14
Loose Parts	0	0	0	2	2
Fatigue	4	7	7	0	18
Erosion/Corrosion	1	0	2	0	3
Unknown	12	5	6	0	23
Totals	73	35	28	4	140

LR = leak rate gallons per minutes

The data of Reference 1 indicate that very few leaks occur in the first two years of plant operation. To estimate frequencies, therefore, we divide the numbers of events by the number of "mature" years of operation rather than the total years. The mature years figure simply does not include the first two years of operation for each plant included in the data base. The resulting estimates of frequencies are 34-37% higher than they would be if the total number of operating years had been used.

The frequencies of occurrence of leaks in the various categories are shown in Tables III.2-3 through 6 for the three NSSS vendors and for all PWRs. The frequencies are all per plant, not per steam generator. Note that we continue to carry the "unknown" mode. Where there were no events, no frequency is shown. However, we do include an "other" mode to represent specifically identified degradation modes that have not been observed, whether or not they are in the list. The total "other" frequency shown is the chi-square zero failure probability at 50% confidence (Reference 5) for the relevant number of operating years. It is a bounding estimate. This value is distributed among size categories as the observed totals are distributed for all PWRs. This means we don't assume the frequency of an event is zero just because the event has never been observed. Quantitatively, the effect is almost always negligible, although it is the only contributor to rupture frequency for Combustion and Babcock and Wilcox plants. The "other" frequencies, or totals including them, are shown in parentheses.

The rupture frequencies from these tables serve as the initiating event frequencies for accidents and risk assessments. These are addressed in Section III-5.

As indicated above, leaks above 0.3 gpm occurring during operation lead to a forced outage for tube repair and inspection. Although smaller leaks do not require shutdown (repairs can be delayed until the next scheduled outage), some plants apparently do shut down to repair the leaks, and some even perform a tube inspection (Reference 6). We estimate a range for forced shutdown frequency by taking as a lower value the frequency of leaks greater than 0.3 gpm (these require shutdown) and as an upper value the frequency of leaks greater than 0.1 gpm. We take the midpoint of this range as a nominal value of the shutdown frequency. This information is shown in Table III.2-7.

Table III.2-3 Frequencies of Leaks and Ruptures by Degradation Mode for Westinghouse Plants (Events Per Reactor Year)

Degradation Mode	Frequencies of Leaks and Ruptures (Reactor Year)$^{-1}$				
	LR<0.1	0.1<LR<0.3	0.3<LR<RUP	RUPTURE	TOTAL
Wastage	0.072	0.006	-	0.006	0.083
Cracking	0.150	0.039	0.033	0.006	0.228
IGA	0.044	0.011	-	-	0.056
Pitting/Fretting	0.006	-	0.006	-	0.011
Incorrect Plug Loc.	-	0.006	-	-	0.006
Tube Sheet Damage	-	0.006	-	-	0.006
Denting	0.022	0.044	0.006	-	0.072
Loose Parts	-	-	-	0.011	0.011
Fatigue	-	-	-	-	-
Erosion/Corrosion	-	-	-	-	-
Unknown	0.061	0.028	0.028	-	0.117
Other	(0.002)	(0.001)	(0.001)	(0.0001)	(0.003)
Total Observed	0.356	0.139	0.072	0.022	0.589
Totals	(0.358)	(0.140)	(0.073)	(0.022)	(0.592)

LR = leak rate in gallons per minutes

Table III.2-4 Frequencies of Leaks and Ruptures by Degradation Mode for Combustion Engineering Plants (Events Per Reactor Year)

Degradation Mode	Frequencies of Leaks and Ruptures (Reactor Year)-1				
	LR<0.1	0.1<LR<0.3	0.3<LR RUP	RUPTURE	TOTAL
Wastage	-	0.022	0.044	-	0.067
Cracking	-	-	-	-	-
IGA	0.022	-	-	-	0.022
Pitting/Fretting	0.022	0.022	-	-	0.044
Incorrect Plug Loc.	-	-	-	-	-
Tube Sheet Damage	-	-	-	-	-
Denting	-	-	-	-	-
Loose Parts	-	-	-	-	-
Fatigue	-	-	-	-	-
Erosion/Corrosion	0.022	-	-	-	0.022
Unknown	0.022	-	-	-	0.022
Other	(0.008)	(0.004)	(0.003)	(0.0004)	(0.015)
Total Observed	0.089	0.044	0.044	0	0.178
Total	(0.097)	(0.048)	(0.047)	(0.0004)	(0.193)

LR = leak rate in gallons per minute

Table III.2-5 Frequencies of Leaks and Ruptures by Degradation Mode for Babcock and Wilcox Plants (Events Per Reactor Year)

Degradation Mode	Frequencies of Leaks and Ruptures (Reactor Year)-1				
	LR<0.1	0.1<LR<0.3	0.3<LR<RUP	RUPTURE	TOTAL
Wastage	-	-	-	-	-
Cracking	-	-	0.026	-	0.026
IGA	-	0.026	0.053	-	0.079
Pitting/Fretting	-	-	-	-	-
Incorrect Plug Loc.	-	-	-	-	-
Tube Sheet Damage	-	-	-	-	-
Denting	0.026	-	-	-	0.026
Loose Parts	-	-	-	-	-
Fatigue	0.105	0.184	0.184	-	0.474
Erosion/Corrosion	-	-	0.053	-	0.053
Unknown	-	-	0.026	-	0.026
Other	(0.009)	(0.005)	(0.004)	(0.001)	(0.018)
Total Observed	0.132	0.211	0.342	0	0.684
Total	(0.141)	(0.216)	(0.346)	(0.001)	(0.702)

LR = leak rate gallons per minute

Table III.2-6 Frequencies of Leaks and Ruptures by Degradation Mode for All PWRs (Industry-Wide Average, Event Per Reactor Year)

Degradation Mode	Frequencies of Leaks and Ruptures (Reactor Year) $^{-1}$				
	LR<0.1	0.1<LR<0.3	0.3<LR<RUP	RUPTURE	TOTAL
Wastage	0.049	0.008	0.008	0.004	0.068
Cracking	0.103	0.027	0.027	0.004	0.160
IGA	0.034	0.011	0.008	-	0.053
Pitting/Fretting	0.008	0.004	0.004	-	0.015
Incorrect Plug Loc.	-	0.004	-	-	0.004
Tube Sheet Damage	-	0.004	-	-	0.004
Denting	0.019	0.030	0.004	-	0.053
Loose Parts	-	-	-	0.008	0.008
Fatigue	0.015	0.027	0.027	-	0.068
Erosion/Corrosion	0.004	-	0.008	-	0.011
Unknown	0.046	0.019	0.023	-	0.087
Other	(0.001)	(0.001)	(0.001)	(0.00001)	(0.0026)
Total Observed	0.278	0.133	0.106	0.015	0.532
Total	(0.279)	(0.134)	(0.107)	(0.015)	(0.535)

LR = leak rate gallons per minute

Table III.2-7 Estimated Frequencies of Forced Outages Due to Tube Leaks and Ruptures
(Nominal Values Centered in Parentheses - Events Per Reactor Year)

Failure Mode	Vendor Westinghouse	Vendor Combustion Engr.	Vendor Babcock & Wilcox	All PWRs
Wastage	0.006 (.009) 0.012	0.044 (.055) 0.066	-	0.012 (.016) 0.020
Cracking	0.039 (.059) 0.078	-	0.026 (.026) 0.026	0.031 (.045) 0.058
IGA	0 (.006) 0.011	-	0.053 (.066) 0.079	0.008 (.014) 0.019
Pitting/Fretting	0.006 (.006) 0.011	0 (.011) 0.022	-	0.004 (.006) 0.008
Incorrect Plug Loc.	0 (.003) 0.006	-	-	0 (.002) 0.004
Tube Sheet Damage	0 (.003) 0.006	-	-	0 (.002) 0.004
Denting	0.006 - 0.050	-	-	0.004 (.019) 0.034
Loose Parts	0.011 (.011) 0.011	-	-	0.008 (.008) 0.008
Fatigue	-	-	0.184 (.276) 0.368	0.027 (.041) 0.054
Erosion/Corrosion	-	-	0.053 (.053) 0.053	0.008 (.008) 0.008
Unknown	0.028 (.042) 0.056	-	0.026 (.026) 0.026	0.023 (.033) 0.042
Other	(0.001 (.001) 0.003)	(0.003 (.005) 0.007)	(0.005 (.007) 0.010)	(0.001 (.001) 0.002)
Totals	0.095 (.165) 0.235	0.051 (.071) 0.099	0.347 (.455) 0.563	0.121 (.188) 0.254

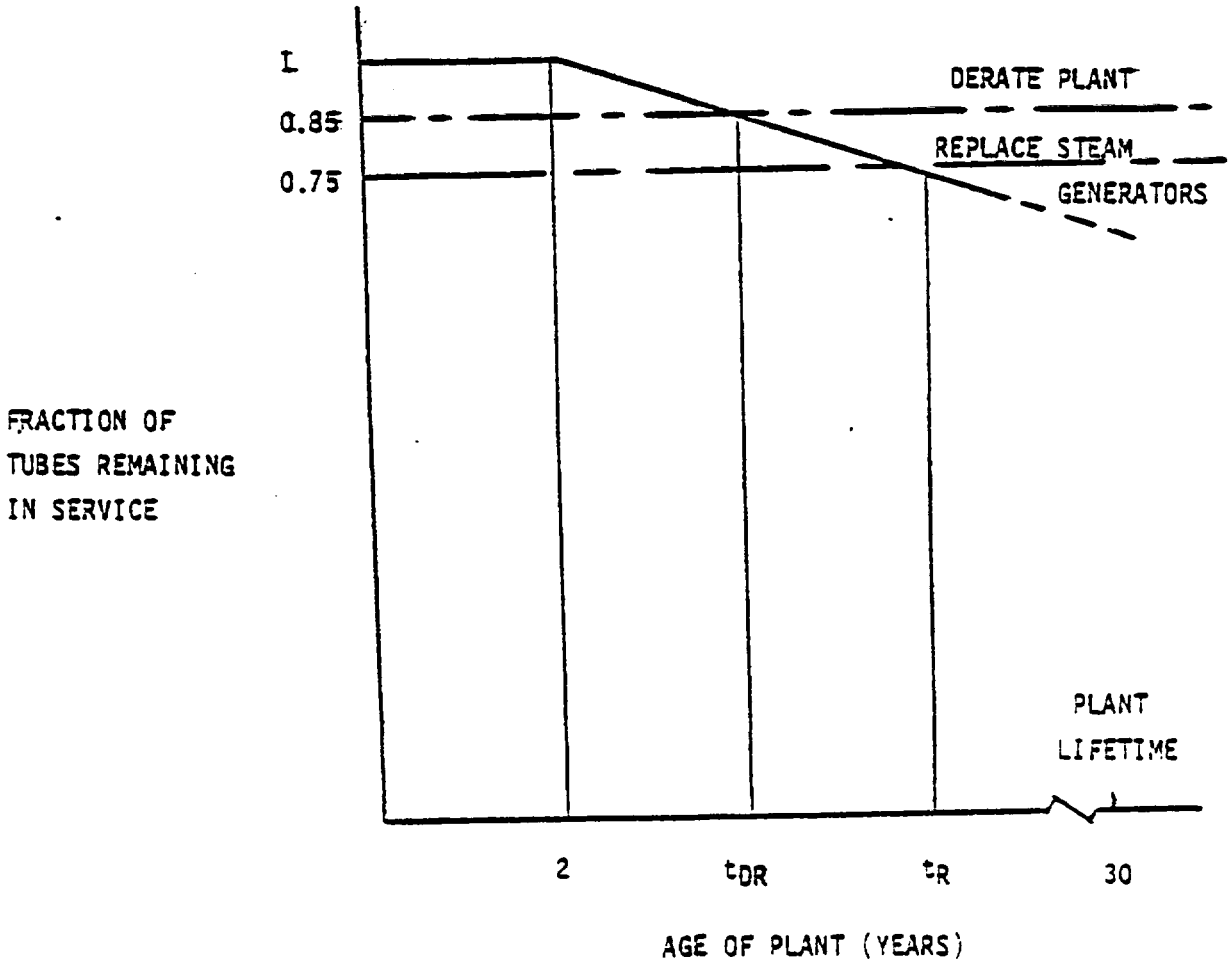

Figure III.2-1 Illustration of Tube Plugging and Steam Generator Replacement Model

Our analysis of tube plugging rates is based entirely on Westinghouse plants since the other vendors have so few plants where steam generator life is threatened. To characterize the plants, we employ the very simple plugging model illustrated in Figure III.2-1. It assumes no plugging in the first two years of plant life and a linear plugging rate thereafter. For the illustration, we assume a plant has about 15% excess tube capacity, i.e., the plant would have to be derated after about 15% of the tubes are plugged or when 85% remain in service, at t_{DR} years of age. We assume, again for illustration, that the steam generators would be replaced when only 75% of the original tubes remain in service, at age t_R. This would correspond to about a 12% derating in this case. Actually, replacement would involve an economic decision and could occur earlier. This issue is discussed in the next section. The problem here is to characterize the plant population according to plugging rates, i.e., the slope of the "plugging curve" after two years. For individual plants, the actual plugging curve can be very non-linear, but this simple linear model based on the average plugging rate is adequate for the purpose at hand.

For individual plants, the plugging rate is estimated from the data of Reference I as % of tubes plugged (as of January 1982) divided by N-2 where N is the number of plant operating years. The values vary widely, from zero to about 4.2%, with a median value of about 0.5%. The population includes 25 plants (units) with over two years of operating history. The plugging rate frequency table is shown in Table III.2-8. Table III.2-9 illustrates the effect of plugging rate on the time to derating and steam generator lifetime according to this simple model. Note that a plant with the median plugging rate would have a reasonable chance at not having to derate the plant in its lifetime. Rates above that (half the plants) portend serious economic problems.

The median rate may be taken as a representative value for characterizing value-impacts; 2% would be a reasonable excursion value to illustrate sensitivity.

The data of Reference 1 were analyzed to determine the relative importance of the various degradation modes as causes for tube plugging. Considering only those tubes whose plugging was attributed to a specific

Table III.2-8 % Plugging Rate Frequency Distribution for Westinghouse Plants Over Two Years Old

% Plugging Rate Interval	Number of Plants
0-0.1	7
0.1-0.5	5
0.5-1	6
1-2	3
2-3	1
3-4	2
4-5	1
	25

Table III.2-9. Illustration of Potential Plugging Rate Effect on Plant Rating and Steam Generator Lifetime

% Tubes Plugged N-2	t_{DR} (0.85)	t_R (0.75)
0.54	30	-
0.89	18.9	30
1	17	27
2	9.5	14.5
3	7.0	10.3
4	5.8	8.3

degradation mode, the distribution is shown in Table III.2-10. We have assumed the distribution applies to the plugging rates as well as the total number of tubes plugged. It is perhaps of interest to note that the distribution among degradation modes for plugging is somewhat different from that for leaks and ruptures. A comparison is shown in Table III.2-11, where the distribution for leaks and ruptures has been adjusted to eliminate the unknown mode.

By combining the distributions of frequencies and plugging rates among degradation modes with an identification of the degradation modes affected by each requirement, the maximum potential improvements can be determined for each of the preventive requirements. The latter identification is made in Table III.2-12. The first three requirements can inhibit degradation and thereby reduce the rates of both leaks and tube plugging. The latter three are in the diagnostic-preventive category They can reduce leaks by helping to assure that degraded tubes are plugged, but they do not have a significant affect on the plugging rates because they do not in themselves inhibit the degradation processes. It is assumed that each requirement can affect half the events attributed to unknown causes. This is the only mode affected by the upper inspection ports. Basically, we assume the ports would hardly be used except when the causes of degradation could not otherwise be identified.

With this correlation among requirements and degradation modes, frequencies can be summed over all degradation modes subject to potential reduction by a given requirement. The resulting frequencies are fractions of total event frequencies and represent the maximum possible reduction by the respective requirements. These reductions would occur only if the requirement succeeded in eliminating 100% of the events due to causes which the requirement could affect. These frequencies are shown in Tables III.2-13, III.2-14 and III.2-15 for forced outages, ruptures and tube plugging, respectively. In the latter table, note that secondary water chemistry is the only requirement expected to have a significant affect on the tube plugging rate. The two loose parts requirements could, in principle, reduce the plugging rate, but no tube pluggings have been attributed to loose parts. This illustrates the fact that the upper limits on the effectiveness of various requirements have a firm basis in the historical tube performance

Table III.2-10 Degradation Mode Contributions to Tube Plugging Rates

Degradation Mode	Westinghouse	Vendor Combustion Engr.	Babcock & Wilcox	All PWRs
Wastage	14%	56%	-	25%
Cracking	22%	-	-	16%
IGA	20%	7%	4%	16%
Pitting/Fretting	5%	21%	7%	9%
Incorrect Plug Loc.	-	-	-	-
Tube Sheet Damage	-	-	-	-
Denting	39%	14%	4%	31%
Loose Parts	-	-	-	-
Fatigue	-	-	18%	<1%
Erosion/Corrosion	-	2%	67%	2%
Total	100%	100%	100%	100%

Table III.2-11 Comparison of Degradation Mode Distributions for Leak and Rupture Frequencies and for Plugging Rates, for All PWRS

Degradation Mode	Distributions of ... Leak and Rupture Frequencies	Plugging Rates
Wastage	25%	15%
Cracking	16%	36%
IGA	16%	12%
Pitting/Fretting	9%	3%
Incorrect Plug Loc.	-	1%
Tube Sheet Damage	-	1%
Denting	31%	12%
Loose Parts	-	2%
Fatigue	<1%	15%
Erosion/Corrosion	2%	3%
Total	100%	100%

Table III.2-12 Applicability of Preventive Requirements to Degradation Modes Leading to Leaks and Ruptures (L) and Tube Plugging (P)

Degradation Mode	Proposed Requirment					
	Loose Parts Monitor	Loose Parts QA	Sec Water Chem.*	Tube ISI	Imp. ECT	Upper Insp. Ports
Wastage			L,P	L	L	
Cracking			L,P	L	L	
IGA			L,P	L	L	
Pitting/Fretting			L,P	L	L	
Incorrect Plug Loc.						
Tube Sheet Damage						
Denting			L,P	L	L	
Loose Parts	L,P	L,P				
Fatigue				L	L	
Erosion/Corrosion		L,P		L	L	
Unknown	L/2,P/2	L/2,P/2	L/2,P/2	L/2	L/2	L/2

* Including Condenser ISI Program

Table III.2-13 Maximum Possible Reduction in Forced Outage Frequency for Individual Requirements (Per Reactor Year)

Requirement	Vendor Westinghouse	Combusion Engr.	Babcock & Wilcox	All PWRs
Loose Parts Monitor	0.032 19%	0.003 4%	0.025 4%	0.025 13%
Loose Parts QA	0.032 19%	0.003 4%	0.020 4%	0.025 13%
Tube ISI	0.130 79%	0.071 100%	0.441 97%	0.166 88%
Improved ECT	0.130 79%	0.071 100%	0.441 97%	0.166 88%
Upper Inspection Parts	0.021 13%	0.003 4%	0.013 3%	0.017 9%
Secondary Chemistry	0.130 79%	0.071 100%	0.165 36%	0.125 66%
Nominal Baseline Freq.	0.165	0.071	0.455	0.188

Table III.2-14 Maximum Possible Reduction in Rupture Frequency for Individual Requirements (Per Reactor Year)

Requirement	Westinghouse	Vendor Combustion Engr.	Babcock & Wilcox	All PWRs
Loose Parts Mon.	0.011 50%	(<0.0004)	(<0.001)	0.008 53%
Loose Parts QA	0.011 50%	(≤0.0004)	(<0.001)	0.008 53%
Secondary Water Chem.	0.012 55%	(<0.0004)	(≤0.001)	0.008 53%
Tube ISI	0.012 55%	(<0.0004)	(<0.001)	0.008 53%
Improved ECT	0.012 55%	(<0.0004)	(<0.001)	0.008 53%
Upper Inspection Parts	0.0001	(<0.0004)	(<0.001)	(0.00001)
Baseline Freq.	0.022	(<0.0004)	(<0.001)	0.015

Table III.2-15 Maximum Possible Reduction in Tube Plugging Rates for Individual Requirements (% Per Reactor Year)

Requirement	Westinghouse Median	Westinghouse Severe	All PWRs Median	All PWRs Severe
Loose Parts Mon.	-	-	-	-
Loose Parts QA	-	-	-	-
Secondary Water Chem.	0.50 100%	2.00 100%	0.49 100%	1.98 100%
Baseline Rates	0.50	2.00	0.50	2.00

data of Reference 1. The analysis now becomes a matter of estimating the extent to which each requirement can achieve its potential effective.

It should be noted that we have carried this approach to about the limit of detail that can be justified. A more "sophisticated" analysis, such as using weighting factors in the correlation among requirements and degradation modes, would not be warranted. The ultimately limiting consideration is the fact that specific events and instances often cannot be accurately attributed to specific modes of degradation. In other words the distributions of event frequencies among failure modes are limited accuracy.

III.2 REFERENCES

1. Unpublished data summarized in NUREG-0886, "Steam Generator Tube Experience", February 1982.

2. L. B. Marsh, "Evaluation of Steam Generator Tube Rupture Events", NUREG-0651, U. S. NRC, January 1979.

3. U. S. Nuclear Regulatory Commission, Safety Evaluation Report Related to the Restart of R. E. Ginna Nuclear Power Plant", NUREG-0916, May 1982.

4. U. S. Nuclear Regulatory Agency, "NRC Report on the January 25, 1982 Steam Generator Tube Rupture at R. E. Ginna Nuclear Power Plant", NUREG-0909, April 1982.

5. A. E. Greene and A. J. Bourne, Reliability Technology, Wiley Interscience, 1972.

6. Personal communication, Emmett Murphy, NRC.

3.0 COST/BENEFIT ANALYSIS OF ACTIONS PREVENTING STEAM GENERATOR EVENTS

Cost-benefit analysis, as part of the Value-Impact Analysis, was performed on that portion of the values and impacts which can be reduced to a stream of dollar benefits and costs, both subsequently compared to arrive at a measure of net benefit. It is not necessarily a rule for making a decision. Rather it is a systematic analysis and evaluation of alternatives and insights provided by economics and decision theory (Reference 8). The approach is in accord with NRC Guidelines and NRC ATWS documents, as well as the applied and theoretical literature (References 1,2,3,4,5,6,7).

3.1 GENERAL APPROACH

The analysis is simply a comparison of the present worth of a stream of benefits through time with the present worth of a stream of costs through time. For a nuclear safety regulation which has uncertain future benefits an expected valve approach must be takenwhere the change in probability (resulting from a safety action) of a future event (e.g. tube rupture) is multiplied by the absolute value of the expected benefit, in this case an avoided cost.

Mathematically,

$$NB = B - C$$

where

NB = Net Benefit
B = Expected Value of the Present Worth of Benefits
C = Present worth of Costs which are one time capital costs or installation costs plus recurring operations and maintenance costs.

hence

$$NB = \sum_{i=1}^{n} PW \ EV \ (Bi) - Ci$$

and

$$EV\ (Bi) = P\ (Bi)$$

where P is the change in frequency of occurrence of an event due to the action

Since the benefit may occur every year for the remaining life of the plant, the time value of money must be accounted for. Hence, the present worth of these avoided costs must be calculated.

Assuming a mean life of 6 years (Reference 9) at 3.77% discount rate (utility cost of capital) two present worth factors can be calculated using the present worth formula:

$$PW = \frac{1 + r}{i - r}\left[1 - \left(\frac{1 + r}{1 + i}\right)^{n}\right]$$

where i = discount rate
r = escalation rate
n = period of years

for avoided costs which will not escalate for 24 years

$$PW^{24}_{.0377} \text{ factor} = 15.6$$

for avoided costs which will escalate for 24 years

$$PW^{.02\ \ 24}_{.0377} \text{ factor} = 19.5$$

This approach is used throughout the analysis for the individual actions where quantification of direct benefits and costs is possible.

Indirect costs and benefits (e.g., health and environment externalities) are not considered in economic terms but are considered elsewhere in this valve impact analysis.

While a marginal analysis of each action was preferred (see Reference 1 and 3) extensive information was not available for incremental evaluation of the proposed actions. Often a parametric approach was used to estimate the change in frequency of an event. Consequently marginal analysis was not considered appropriate due to data limitations.

For comparison of groups of alternative actions however, the marginal approach was used. Generally the net benefits were ranked by size and then evaluated in groups accordingly to determine the most cost effective groups of actions.

3.2 BENEFIT/COST ASSUMPTIONS

3.2.1 General Assumptions

The following general assumptions are used throughout the analysis. While all are straightforward, discussion of the discount rate and replacement power cost is merited.

Choice of an appropriate discount rate is a perennial issue in cost benefit analysis. Since Federal funds will not be used for the implementation of these regulations, the utility of capital is appropriate for the discount rate.

Use of coal replacement power cost is assumed to be the first choice due to the large and increasing percentage of coal plants in utility generating mixes. This percentage is expected to increase with time. For those cases where utilities have no choice but to use oil replacement power, the avoided cost would be at least twice as much.

Item	Source
Plant Life: 30 years	EPRI TAG82
Discount Rate: 3.77% (real)	"
Nuclear Fuel Cost: $.0078/Kwh	"
Nuclear Fuel Cost Escalation: 0%	"
Short Term Coal Electricity: $.025/kwh plus 10% O&M, period $\leq$ 4 weeks	SAI Survey
Long Term Coal Electricity: $.025/Kwh	"
Period > 4 weeks, then $1/Kw/week demand charge	
Coal Electricity Escalation: 2.0%	EPRI TAG 82 E1A81,DRI82
Plant Size: 1000 MWe with 3 SG/plant 1982 dollars	

3.2.2 Specific Assumptions-Benefits

Benefits are avoided costs of forced outages for leaks, for tube rupture and for steam generator replacement. Avoided costs are defined as net replacement power, fix costs including capital, labor, and related engineering costs, as well as related inspection/testing costs as appropriate.

Avoided Costs for Forced Outages for Leaks (ACFL)

ACFL: Fix Costs (FC)+Net Replacement Power (NRP)
+ Eddy Current Testing (ECT)

Length: 2-14 days
Fix Cost: Tube Plugging
Based on data from Westinghouse (Reference 11)
Tube plugging $1600/tube (materials & labor)
assume 1 tube requires plugging
work team mobilization is $27,000
team size is 9 technicians
average round trip air fare @ $200/man is $1800

round trip per diem @ $75/day
2 days for 9 men is $1350
14 days for 9 men is $9450
Total Fix Cost for 2 days $30,000
Total Fix Cost for 14 days $38,000
PW of Fix Costs for 2 days = $584,025
Eddy Current Testing Cost @ $15,000/day labor & material
for 14 days is $210,000
PW of Fix Costs for Eddy Current Testing = $7,364,000

Net Replacement Power Cost: Coal Electricity Cost (CEC) - Nuclear Fuel Cost (NFC) based on general assumptions

Coal Electricity for 2 days at $660,000/day $1,320,000
for 14 days $9,240,000

Nuclear Fuel Cost for 2 days at $107,200/day or $374,400
for 14 days $2,620,800
Total Net Replacement Power Cost for 2 days $946,000
for 14 days $6,620,200

PW of Net Replacement Power for 2 days = $19,900,000
PW of Net Replacement Power for 14 days = $139,000,000
PW ACFL for 2 days = $20,500,000
PW ACFL for 14 days = $146,700,000

Since the probability (P) is less than 1 of a leak-caused forced outage, the Expected Value (EV) of PW ACFL must be calculated for the base case. Assuming the P is the same for every year for 24 years, the PW ACFL is multiplied by P:

EV (PWACFL) = P(PWACFL)

$$= P\left\{\left[\frac{1+\dot{e}}{i-\dot{e}}\left[1-\left(\frac{1+\dot{e}}{1+i}\right)^{n}\right] \times NRP\right]+\left[\frac{1}{i}\left[1-\left(\frac{1}{1+i}\right)^{n}\right] \times FC \text{ or } FC + ECT\right]\right\}$$

Note: Since different escalation rates are used to calculate CEC and NFC components of NRP, the PW's must be calculated separately to obtain NRP.

For the regulation case, it is desirable to know the change in P as a result of the action, so the reduction of P of occurrence is used to calculate EV(PWACFL).

Avoided Costs of Forced Outages for Tube Rupture (ACFR)

ACFR: FC + NRP
Length: 30,60,90 days
Fix Cost: Repair Tube Rupture
Repair cost based on GINNA experience of
10 man years of labor, with 5 man/years at $50,000/yr
and 5 man/years at $100,000/year (Section IV.1)
Total Fix Cost = $150,000
PWFC = $11,700,000

NRP: use general assumptions
replacement coal power cost (CEC) for 30 days is $19,800,000
(energy charge only)
replacement nuclear fuel cost (NFC) for 30 days is $5600,000

PW 30 day NRP cost is $298,000,000

60 day CEC is $39,800,000 + demand charge for 4.5 weeks or
$4,500,000 for total of $45,000,000

60 NFC is $11,200,000

PW 60 day NRP cost is $685,000,000

90 day CEC is $59,400,000 + $8,500,000

90 day NFC is $16,800,000
PW 90 day NRP cost is $1,060,000

Using PW factors as before the PW of the total avoided costs for forced outages form tube rupture are:

PWACFR for 30 days = $310,000,700
PWACFR for 60 days = $696,000,000
PWACFR for 90 days =$1070,000,000.

Since the probability is less than that of a tube rupture caused forced outage the EV of PWACFR must be calculated for the base case. As before, assuming P is the same for all 24 years yields:

EV(PWACFR) = P(PWACFR)

For the regulation case, it is desirable to know the change in EV(PWACFR) as a result of the action, so the reduction of P of occurrence is used to calculate EV(PWACFR).

Avoided Cost of a Forced Outage for Steam Generator Replacement(ACFSGR)

ACFSGR: FC + SGR
length: FC occurs during refueling outage (1/year) and is on critical path; SGR requires 270 days
FC: tube plugging

Cost was based on Westinghouse data developed earlier. For reactors with severe problems 2.4% of total tubes plugged per year so for 1000 MWe unit with 9900 tubes in 3 steam generators, 238 tubes plugged/year. For reactors with average problem .7% of total tubes plugged per year or 69/yr. Assuming SG have 110% of tubes required for 100% capacity operation and derating occurs when more than 10% of tubes, are plugged; or alternatively when less than 8910 remain unplugged.

For severe plants using the Robinson case as an example, which are now nine cycles (years) old, 2.4% tubes are plugged/year assuming no tube plugging first two years. Then derating occurs now. The remaining tube plugging cost is from above, and 238 tubes/cycle can be plugged at 85 tubes/hr rate so two days at a time is used. The previously applied fixed cost now includes 238 x $1600/tube = 317,000, for a Total cost of $347,000.

For moderate base case with plants with average life at 5 years of .7% tube plugging rate and same critical derating limit, the derating occurs in cycle 16 now.

The fix cost now includes 69 x $1600/tube = $110,000
Total per year - $141,000
Using PW techniques as before the PW total cost for 24 cycles is $2,200,000.

The average utility industry plant will undergo a derating in cycle 16. Assuming a linear derating as tube plugging rate, .7% will be derated per year progressively. At a 65% capacity factor this corresponds to .46%/year progressive requirement for replacement power or a 6.4% replacement power required by cycle 30. The cumulative present worth of this power is $37,500,000.

These are for base case. The result of an action would conceivably reduce the tube plugging rate, thus delaying the critical limit and derating.

SGR: Labor, Matarials, Engineering, Cost Support Contingencies and AFDC, plus disposal/storage of old SG.

Estimated SG installation (3 SG per 1000 or We unit) cost is $100,000,000.* This is assumed to be the current SG MWe replacement cost based on actual experience of replacing at Surry 1 and 2 although the proposed cost was lower. The average of the proposed costs escalated to January 1982 dollars for replacement of 3 SG per unit at Surry 1 and 2 as well as Turkey Point 3 and 4 was $66 million (References 9 & 10).

Using PW techniques as before, for the severe plant problem, assuming replacement of new SG's in cycle 18 or 9 years from now the, PWSGR = $71,700,000.

Disposal cost is $10,000,000. PW of Disposal Cost is $~~72,000,000~~ 7,200,000 Since SGR requires a forced outage, net replacement power cost incurred. Assume SGR is done coincident with refueling outage so net total time is 39 weeks - 7 week (refueling outage average time) or 32 weeks. The energy charge is 224 days x $660,000 = $148,000,000 and demand charge is 32 weeks x $1/KW/wk = $32,000,000. The nuclear fuel not used is $42,000,000. Using PW techniques as before for the cycle 18 month replacement (severe problem) NRP cost = $136,450,000

The PW of this replacement power is $97,800,000.

The total ACSGR is $176,000,000.

---

* This approach is simplified here. Appropriate utility capital investment analysis requires consideration of the levelized capital charges per year. For example, if the SG replacement occurred with 15 years of plant life remaining a real fixed charge rate of .105 would require comparison of only $10.5 million of annual capital not $100 million. That value would in turn have to be considered and PW terms from our vantage point here.

REFERENCES

1. Mishar, E.J., "Cost Benefit Analysis, Porveger Special Turbine" New York, 1976.

2. Cohen, Marvin, et al. Science Applications, Inc., "Value Impact Analysis, for Electric Power Research Institute, NP-1237, Palo Alto, California, 1979.

3. Rice, L.R. and L.J. Pollenz, Applied Decision Analysis ,"PWR Steam Generator Cost-Benefit Methodology, for Electric Power Research Institute", NP-2295, Palo Alto, CA, 1982.

4. Zinrc, G.E., et al., "Some Aspects of Cost Benefit Analysis for In-Service Inspection of PWR Steam Generators, for US Nuclear Regulatory Commission, NUREG/CR-1490, Washington, DC, 1980.

5. Nuclear Regulatory Commission, "Anticipated Transients Without Scram for light Water Reactors, Volume II: Appendicies, NUREG-0460, Washington, D.C., April 1978a.

6. Nuclear Regulatory Commission, "Anticipated Trancients Without Scram for Light Water Reactors, Volume III: Staff Report, NVREG-0460, Washington, D.C., December 1978b.

7. Nuclear Regulatory Commission, "Guidelines for Conducting Value-Impact Analysis, Washington, D.C., 1978c.

9. U.S. Nuclear Regulatory Commission, Docket Nos. 50-250, 50-251, "Steam Generator Repair Report Revision 1, Turky Point 3 and 4, Washington, D.C., 1977.

10. VEPCO, Steam Generator Repair Program, Surry Power Station, Unit Nos. 1 and 2, Revision 1, submitted U.S. Nuclear Regulatory Commission, Washington, D.C., 1977.

11. Telephone Conversation with Mr. Jones Snee, Nuclear Services Division, Westinghouse Corporation, July 27, 1982.

12. Electric Power Research Institute, Technical Assessment Guide 1982, Palo Alto, CA.

13. Data Resources Inc., Energy Review Summer 1982, Lexington, Mass. 1982.

14. U.S.DOE/EIA, Annual Report to Congress 1981, Washington, D.C. 1982.

4.0 RADIATION EXPOSURES

This section presents the baseline data used to evaluate the radiation exposures associated with the activities within each proposed requirement.

4.1 MAIN ISSUES

The main radiation exposure issues which should be addressed for each SGTR value-impact analysis are the effects of requirement implementation on:

- o Total occupational radiation exposures (increase or decrease)
- o Total radioactivity released to air
- o Total radioactivity released to water
- o Total radioactivity content of resultant solid waste

The general methods for assessing each of the above, as well as the data needed to support these assessments, are presented below.

Occupational Exposures

In order to estimate the occupational exposure impacts of the proposed requirements, certain data are required concerning the increased (or decreased) amount of time spent by personnel in radiation fields, as well as information regarding the intensity of these fields. Although the roentgen (R) and the rem are not equivalent units, total body exposures are estimated simply by multiplying the amount of additional personnel time (personnel-hours) required for implementation by the expected exposure rate (R/hr) in the area. Much of the needed exposure rate data for various locations on and around steam generators has been compiled. What was needed was estimates of the total amount of labor time (in person-hours) associated with each requirement, and the specific locations in, on, or around the SG in which the labor must be performed. When possible, the source locations were referenced to those identified in Figure III.4-1 for source locations in the SG and Table III.4-1 provides exposure rate data for these source locations.

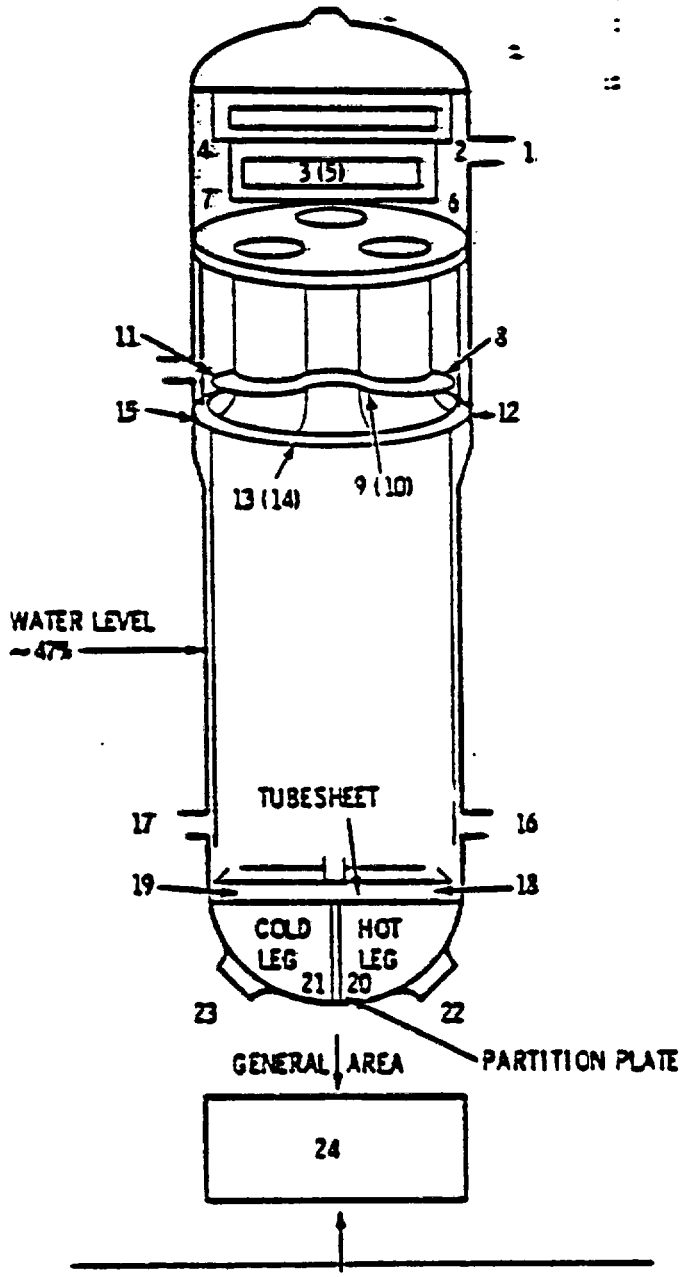

Figure III.4-1 Source Locations in Steam Generator*

Note: Points in parentheses are located 180° opposite those shown. Steam generator water level is at zero in the primary and at -47% in the secondary side.

* NUREG/CR-1595

Table III.4-1 Exposure Rates in Steam Generators by Location*

Measurement Point[a]	Exposure Rate, R/h	Location
1	0.05	Manway
2	0.2	Waist-high in center of and next to perforated plates
3	0.2	
4	0.2	
5	(b)	
6	0.5	0.3 m above deck plate
7	(b)	
8	1	Feedwater ring
9	2	
10	2	
11	(b)	
12	3.5	Flow resistance plate
13	10.5	
14	10.5	
15	(b)	
16	10	Hand hole
17	10	
18	30	Tubesheet
19	37	
20	22	Hot leg
21	30	Cold leg
22	18	Manway
23	22	
24	1.2	Work platform

(a) See Figure III.4-1 for location of measurement points.
(b) No measurement taken.

* NUREG/CR-1595

Radioactivity Released to Air

The primary sources of airborne releases are from the cutting of reactor coolant piping or other system piping. In order to assess the amount of activity released, an estimate is needed of the area of material vaporized by the cut. This will then be multiplied by contamination levels typical of the piping (e.g., 80uCi/cm^2 for primary piping; 10^{-3} uCi/cm^2 for secondary side piping), with credit taken for HEPA filtration of the effluent.

Radioactivity Released to Water

The primary sources of waterborne radioactive effluents are the release of reactor primary coolant and the discharge of contaminated laundry wastewater. If the reactor coolant system must be drained and discharged, a total released of 190 curies, consisting almost entirely of tritium, should be assumed. Data on laundry wastewater discharges are sketchy and variable. About 0.5 Ci were released in laundry wastewater during the SG replacement activities at Surry.

Containment Solid Waste

These wastes consist of materials such as contaminated insulation, structural materials, components not intended for reuse, solidified decontamination solutions, paper waste, and disposal protective clothing. It should also be noted that these data are also required to assess cost impacts of plan implementation.

ALARA Consideration

Many of the doses resulting from specific SG activities have the potential to be lowered considerably by the implementation of ALARA considerations. Data on such reductions are sketchy, but are discussed if available.

4.2 ACTIVITY DOSES

Several of the requirements investigate value-impacts of activities which are common to many of the requirements. The dose for each activity is

described in more detail within each requirement (Section IV), but the overall general approach and data is presented below. Also, the approach to assessing the per unit avoided dose is described.

4.2.1 Individual Activities

The individual common activities of concern are: SG ISI, tube plugging, SGTR repair and SG replacement. The occupational doses are described for these activities.

SG ISI

The total radiation exposure due to SG ISI has been documented to be between 5 and 20 man-rem per SG (NUREG/CR-1490). However, this ISI is associated with hot-leg side set-up only, and a cold-leg side set-up would double this exposure. The percentage of tubes inspected in the SG changes the exposure dose at about $2x10^{-3}$ man-rem per tube inspected (NUREG/CR-1490, pp. 25-26). The exposure is associated with the equipment set-up and removal, according to NRC draft regulatory guide estimates, is 4.95 man-rem for this job (see NUREG/CR-1490, p. 26).

Tube Plugging

Tube plugging is 95% explosive plug oriented. Explosive plugging takes from 20 seconds to 2 minutes (NUREG/CR-1490, p. 22) in a 10-60 R/hr environment, yielding a nominal 1 man-rem per plug value.

SGTR Repair

The dose for SGTR repair has been estimated to range from 10 to 100 man-rems (NUREG-0886) for moderate repairs, such as tube plugging, pulling or weld repairs.. The tube ruptures experienced to date have involved inspection and repair including eddy current testing, sludge lancing, tube plugging, and tube pulling, and the associated dose has been estimated at 100 man-rems per outage. However, recent experiences with SG repairs would indicate that a major leak repair can involve a 150 mman-rem exposure if all the personnel involved are accounted for. The SGTR repairs have caused total doses of

approximately 350 man-rem per event when QA and testing exposure are included as part of the event.

SG Replacement

The replacement of a SG has been estimated (NUREG/CR-1595) to have a occupational exposure of between 800 and 2150 man-rems. Experience with three utilities showed that the dose per SG is approximately 700 man-rems (NUREG-0692, 0886, and /CR-1595).

4.2.2 Avoided Doses

The avoided occupational doses will be calculated by determining what the avoided frequency of an event (activity) is for a requirement. This avoided event frequency will then be multiplied by the number of reactor years; this produce is then multiplied by the dose exposure per event to get the avoided dose.

For example, if the avoided event frequency is 0.015 SGTRs/reactor-year and the average unit has 25 reactor years of remaining life, then 0.36 SGTR events will be avoided by the average plant. Since a SGTR repair involves a dose of 350 man-rem, then the avoided dose is 126 man-rem per operating unit. Each of the value-impact assessments for the proposed requirements used this approach to determining the avoided or additional occupational radiation dose.

5.0 PUBLIC RISK FROM ACCIDENTS INITIATED BY STEAM GENERATOR TUBE RUPTURES.

A risk assessmentwas performed to estimate the conditional probabilities of accidents, given a steam generator tube rupture as initiator. Expected population doses were also estimated. The probabilities were also used to estimate expected values of accident cleanup costs.

A rupture is defined to be an event with primary-to-secondary leak rate exceeding the makeup capacity of the charging pumps at full system pressure. Shutdowns for smaller leaks are assumed to follow normal procedures and not to contribute significantly to accidental release sequence probabilities.

All of the results needed for other aspects of the value-impact assessment are presented in Table III.5-1. The probabilities shown are conditional upon theoccurrence of a tube rupture. For reference, the frequency of tube ruptures is of the order of 10^{-2} per year. Further details on frequencies were provided in Section III.2.

The population dose information resulted form internal studies done at NRC relating to WASH-1400 release categories (References 1 and 2). The risk assessment dealt with four release types: (1) a core melt following SGTR which is similar to WASH-1400 category 4, (2) a core melt following a PORV LOCA which is similar to WASH-1400 category 5, (3) a major release without core melt which is modeled by one tenth of WASH-1400 category 7, and (4) a minor release without core melt which is modeled by 1/100 of WASH-1400 category 7.

The dominant accident sequences leading to core melt following an SGTR are: (1) a loss of offsite power and failure of both diesels to start, i.e., total power loss, and (2) failure of the auxiliary feedwater system. The dominant sequences for the core melt following PORV LOCA are (1) a PORV LOCA resulting from operator pressure reduction with operator failure to respond to the larger LOCA, and (2) a PORV LOCA with a failure to align the RHR system for recirculation.

Table III.5-1 Baseline Probabilities Population Exposure, and Cleanup Cost for SGTR - Initiated Accidents.*

Accident Category	Conditional Probability Given SGTR	Cond. Pop. Exposure Given Release (man-rem)	Expected Pop. Exposure Given SGTR (man-rem)	Cond. Acc. Cleanup Cost Given Release	Expected Acc. Cleanup Cost Given SGTR (man-rem)
Minor Release	4.1 E-2	23[1]	0.9	$10,000	$410
Extended Puff Release	8.2 E-4	230[2]	0.2	$10,000,000	$8200
Core Melt	1.5 E-5 (0.5 E-5 with Feed & Bleed Capability)	2.7 E+6	40.5	$3,000,000,000	$45,000
Core Melt Following PORV LOCA	2.1 E-7	1.0 E+6[4]	0.2	$3,000,000,000	$630

(1) 1/100 of WASH-1400 PWR Category 7

(2) 1/10 of WASH-1400 PWR Category 7

(3) WASH-1400 PWR Category 4

(4) WASH-1400 PWR Category 5

* Population exposure for WASH-1400 release catagories from Reference 2.

The dominant sequence for the major release category is a secondary LOCA due to relief valve failure or pipe rupture after overfill and a failure to reduce primary pressure rapidly.

The dominant sequences for the minor release category are: (1) secondary relief valve usage on the damaged steam generator loop and a failure to reduce primary pressure rapidly, and (2) a secondary LOCA with continued feedwater input to the damaged steam generator loop.

Note that a secondary LOCA release is diluted if feedwater to the damaged steam generator is permitted.

The study used an adaptation of a network analysis similar to a Markov model to formulate a logic structure for the evaluation and to delineate possible accident sequences. The study did not use event trees. A data base formulated from WASH-1400 (Reference 1) and IREP studies (Reference 3) provided information used to determine probabilities associated with network branches. The results are intended to be generic for the purposes of the value-impact assessment, but were obtained for a PWR system similar to the Sequoyah Nuclear Plant. Because of the short schedule and limited resources for this aspect of the study, no sensitivity studies or uncertainty analyses were performed, even though important conclusions were drawn from the results. Nevertheless, the study, which is described in Appendix B, was quite extensive and performed to a considerable level of detail. It may be of interest to the Probabilistic Risk Assessment community at large not only for its results but for its novel approach and the detail to which it modeled operator involvement in the progression of accidents.

REFERENCES

1. WASH-1400

2. "Dose Numbers for Core Melt Accidents Generated Internally at NRC for Use in Value/Impact Analysis", obtained informally by Paul Amico (SAI) from AT Serkiz (NRC-NRR), September 1982.

3. Interim Reliability Evaluation Program, PRA studies sponsored by the USNRC, 1982.

SECTION IV: VALUE-IMPACT ASSESSMENTS

The value-impact (V-I) assessment for each of the twelve requirements is presented in this section as "stand-alone" subsections. While each requirement utilizes the baseline data described in Section III, the individual subsection discusses and presents the following information for each proposed requirement:

- Statement of the NRC requirement and its bases;
- Description and analysis of data related to probability changes, costs, and radiation exposures; and
- Discussion of public risk reduction, implementation plans, and alternatives to the subject requirement.

The requirements were grouped into three types of actions, according to how they were perceived to affect SGTR. The first group, preventative requirements, would reduce the probability of experiencing SGTR. Included in this group are the following requirements (numbered as they are presented in this section):

1. Prevention and Detection of Loose Parts
2. Steam Generator Inservice Inspection Program
3. Improved Eddy Current Techniques
4. Upper Inspection Ports
5. Secondary Water Chemistry Program
6. Condenser Inservice Inspection Program
7. Stabilization and Monitoring of Degraded Tubes.

The second group consists of two requirements dealing with limits on operating parameters. These are:

8. Primary to Secondary Leakage
9. Coolant Iodine Activity.

The third group of requirements are intended to mitigate or avoid adverse SGTR consequences. These three requirements are:

10. Reactor Coolant System Pressure
11. Safety Injection Signal Reset
12. Containment Isolation and Reset.

I.0 VALUE-IMPACT ANALYSIS FOR "PREVENTION AND DETECTION OF LOOSE PARTS AND FOREIGN OBJECTS IN STEAM GENERATORS" REQUIREMENT

I.I SUMMARY

This section describes the proposed requirement and the bases for its selection and summarizes the result of the value-impact analysis.

I.I.I Description

This analysis addresses the requirement proposed by NRC (1) to prevent the introduction of loose parts and foreign objects into steam generators or to detect the presence of them on the secondary side of steam generators. The NRC recommendation would require three actions. They are:

1. Steam generators shall be inspected with an appropriate optical device on the entire periphery of the secondary side including the tube lane for purposes of identifying loose parts, foreign objects on the tubesheet and peripheral tube outside damage just above the tubesheet. For PWR OL applicants, such inspections shall be part of the preservice inspection. Licensees shall perform inspections (a) at the next planned outage for eddy current testing of steam generator tubes, and thereafter, (b) after any secondary side modification or repairs to steam generator internals, and (c) when flaw indications are found in the free span portion of peripheral tubes unless it has been reasonably established that the indications did not result from damage by a loose part or foreign objects. The inspections in (a) above are to be performed until a LPMS as described in action 3. below is implemented.

2. Quality assurance procedures for steam generator primary and secondary side operations and maintenance, repairs, and inspection operations shall be reviewed and revised as necessary to ensure that an effective system exists to preclude introduction of foreign objects into either the primary or secondary side of the steam generator. This effort should apply to licensee quality

assurance/quality control procedures when major components are opened and should include detailed accountability procedure for all foreign objects entering the steam generator as well as for all components and parts removed from the internals of the steam generator.

3. All pressurized water reactors shall have installed and operational a loose part monitoring system (LPMS). The system shall be capable of monitoring the steam generator secondary side, as well as the primary side, and shall conform to Regulatory Guide 1.133. Sufficient sensors shall be provided in acoustically coupled regions of the steam generator to ensure adequate LPMS sensitivity for detection of loose parts in the secondary side and the primary channel head.

1.1.2 Need for Action

Operating experience shows that the use of existing procedures has resulted in a number of objects being inadvertently left in both the primary and secondary side of steam generators at nuclear power plants (examples of recent events are in references 2, 3, 4, 5 and 6). Loose parts and foreign objects left inside steam generators were identified as the cause of the tube rupture events at Prairie Island and Ginna (3, 4, 7), which resulted in forced outages. Furthermore, many of the recent inspections have found a variety of foreign objects in the secondary side of steam generators (5, 6). The recommendation of secondary side peripheral visual inspection is also needed to ensure that degraded conditions as caused by loose parts on the outer diameter of peripheral tubes are identified.

An effective inspection and/or QA program could have detected or prevented many of these objects from being left in the system. An effective LPMS could have detected many of the objects left in the systems as well as those parts that became loose during operations.

1.1.3 Summary of Values and Impacts

The values and impacts of implementation of various combination of recommendations were calculated. Results are summarized in Table 1.0.

Table 1-0. Summary of Cumulative Values and Impacts for Detection or Prevention of Loose Parts in a PWR[a]

	Impacts		Values		
			Expected Value of Avoided		Net
	Exposure Man-Rem	Cost Million $	Exposure Man-Rem	Forced Outage Cost Million[d] $	Cost Savings $ Million
Secondary ISI + QA	275-675	0.2	87-165	2.7	2.5
Secondary ISI + QA + LPMS[b]	175-470	.7-1.0	94-180	3.0	2.0-2.3
Secondary ISI + QA + LPMS[c]	175-470	.5-.8	94-180	3.0	2.2-2.5

a. Assumes a PWR with 3 steam generators with a remaining plant life of 24 years.
b. Assumes LPMS installation is required.
c. Assumes an existing LPMS can be used.
d. Cost assumes a 30 day outage to repair tube rupture; see text for 60 and 90 day outage costs.

The man-rem impacts are conservatively estimated and are dominated by the QA dose commitments. A range of 375 to 750 man-rem is the estimate of the upper bound for QA, whereas a range of 75-150 may be closer to the average. If this is the case, then the man-rem impact is comparable to the expected value of the avoided man-rem exposure.

Each of the combinations has a net cost reduction. The net cost savings are approximataly equivalent to the current cost of one week's forced outage.

1.2 APPROACH

1.2.1 Objective

The objective of the analysis is to estimate the impacts and values of implementing the recommendations. Where possible the direct costs and occupational exposure doses related to implementation are estimated. Additionally, a measure, either qualitative or quantitive, of the change in risks to the public is addressed. The other values to be gained from the implementation of the recommendations such as avoided forced outage costs are estimated. Intangible or hard-to-quantity values, such as the possibility for avoided occupational exposure, are addressed only qualitatively.

1.2.2 Scope

The scope of the analysis is limited to activities associated with steam generators and the incremental benefits and costs of implementing the requirements.

1.3 DATA AND RESULTS OF DATA ANALYSIS

1.3.1 Industry

The value and impacts associated with the nuclear industry are related to the three factors identified below:

- the change in frequency of an event;
- the costs of implementation and avoided costs from prevention of the event; and
- radiological exposure, that due to implementation and that avoided.

Avoided exposures and costs were calculated as the difference between the expected value before and after the implementation of the recommendations. For example, the avoided occupational radiological exposure for one year is expressed mathematically as:

annual avoided exposure = change in annual event rate x exposure associated with the event.

The plant lifetime avoided exposure is computed by summing the annual avoided exposures over the remaining life of the particular plant. In a similar manner the avoided costs are calculated using the present value of the event costs in the future years or:

$$\text{avoided cost} = \sum_{i}^{\text{remaining life}} \text{change in annual event rate} \times (\text{event cost})_i$$

where $(\text{event cost})_i$ = present value of the event cost in year "i".

The following discussion is structured to present the baseline situation in order to give an overall view of the elements of costs and radiological exposures After this overview, specifics in terms of the change in frequency, the costs and exposure are presented.

Inspection of the Upper Side of Tube Sheet

Implementation of this recommendation requires an inspection at the next time of ECT. The major requirement is labor, but in addition a mini-TV camera system or other appropriate optical device is needed for inspecting the outer periphery above the tube sheet.

It is reported that SGs have ports installed for hand access that can be used to to inspect this region (9). For those SGs without these access ports, inspections could probably be performed from another port but with additional difficulty accompanied by greater labor cost and, perhaps, greater occupational exposure.

The inspection will be performed in conjunction with ECT, therefore, the effort required to access the arm way access port should be small. If sludge removal is performed along with ECT then there is no access effort. It is estimated that an inspection would require one day for a steam generator with a crew of 3 - 4 persons (10). Equipment required to perform inspection is a mini-TV camera or appropriate device to perform the visual inspection. Such equipment is presently being used in the industry (10).

The occupational exposure for a single inspection of one steam generator would be comparable to the dose associated with a sludge lancing procedure. The doses reported to NRC are not identified by specific tasks; however, estimates of exposure due to SG inspection and maintenance are given for some specific plants (11). Doses are typically less than 100 man-rem with the average being 75 man-rem. The range is from 10 to 350 man-rem. Dose data are provided principally by ECT operations. Comparing the activities required for inspecting the top of the tube sheet with present inspection and maintenance activities provides an estimate of the exposure for this type of inspection of one SG in the range of 5 to 10 man-rem.

The value of the recommendation would be the detection of 1) tube damage due to loose parts or foreign objects or 2) loose parts or foreign objects themselves. Appropriate action (e.g., ECT, plugging, removal) would be taken. Such action could prevent a future forced outage due to tube rupture, leakage or degradation with accompanying impacts.

QA Procedure Review and Upgrade

The implementation of this recommendation entails review of existing procedures; assessment of the adequacy of these procedures to preclude the inadvertent introduction of loose parts/foreign objects into SG during

maintenance, repairs or inspection; and if necessary, upgrading the procedures.

The impact of implementation could be as little as a few hours, for review and documentation of the review, to a major effort to develop a QA program for SG maintenance, repair and review. It is estimated that approximately 2 man months are required if the QA/QC procedures require upgrading.

For any procedure upgrade it is expected that the operational impacts would be: 1) an increase in the labor required to perform maintenance (e.g. due to QC holds for inspections), and 2) an increase in occupational exposure. The amount of the increase depends upon the particular tasks being performed. Based upon the description of the QC changes at the Ginna facility (7) and discussions with personnel familiar with the QC changes at Zion (12) after discovery of loose parts, it is estimated that the labor required for a given maintenance task may increase between 10 and 20 percent. Most of this increase is for additional QC inspection. The increase in occupational exposure should not increase as much as the labor because the additional labor time would be spent, on the average, in a lower radiation exposure area. It is estimated that a dose increase of 5 to 10% would result. The average exposure for inspection, maintenance and repair from table 6 of reference (11) is 146 man-rem; thus increased occupational exposure for QA is estimated to be 5 to 15 man-rem per reactor per year on the average.

The value of the QA/QC procedure review is the assurance it gives when activities are performed that foreign objects are not introduced into the SG. The same benefits mentioned above would apply to an improved QA program.

LPMS Installation

This recommendation requires the installation operation and/or use of an LPMS system. A LPMS channel consists of detector (an accelerometer), preamplifier, and signal processing unit(s). The signal processing units are outside containment. The signal processing units can be as simple as an amplifier and alarm circuit or as sophisticated as a micro-processor based

electronic modules with very involved detection logic. Some units incorporate false alarm signal rejection logic, others may include real time background noise measurement and an alarm signal based on the difference between total and background measurement.

Plants currently using a LPMS may only need anything to verify the capability to detect signals on the secondary side of the SG in order to comply with the proposed requirements. Some plants may need to install one to three additional channels specifically on or near the secondary side of the SG. A utility needing better diagnostics in order to assess the safety implications of a detected loose part may want four detectors so the location and size of the objects can be better characterized.

The cost of a LPMS consists of that of materials and installation. In 1978-1979 the material costs estimate for a installed system ranged from $40,000 to $150,000 (13). Physical Acoustics Corporation stated a price for the electronics of about $2,500 and up per channel(14). Recently, in retrofit of two channels/SG (4 SG total) on an almost new Westinghouse plant, the costs were estimated at $17,000 for materials and $140,000 for installation (15). There is an ongoing NRC review of the worth of requiring the backfitting and/or upgrading of existing LPMSs on both the primary side and secondary side of steam generators (8).In July 1982, the NRC (8) stated that a complete system in retrofit mode for the primary and secondary side would cost $500,000, including calibration and training. Assuming four detectors/SG and two on the reactor vessel, the cost per channel would be about $25,000 - 30,000.

Initial calibration takes about two man months for effective systems (13). O&M requires about one man hour/day (13). Considering the larger plants (i.e., 4 steam generator loops/reactor) this probably should be escalated to about 1/4 - 1/2 man year/year for O&M for both a primary and secondary system. One-eighth of a man year is estimated to be attributed to O&M on the secondary side.

In the event that a LPMS alarms, an assessment must be performed. During the restart of Ginna, a Westinghouse team spent about 1-1/2 - 2 weeks analyzing the signals from the newly installed LPMS (16). Another example is North Anna Unit 1 where in February 1980, and again in May 1982 West-

inghouse LPMS teams spent time on site to analyze LPMS signals. Zigler (15) estimates the alarm assessment cost to be about $20,000 for a simple event and $50,000 and up for more complex events.

Occupational exposure for installing LPMS before Ginna Restart is 11.5 man-rem (16). Another SG owner quoted an occupational exposure of 13 man-rem to install a LPMS as a retrofit at the request of ACRS (8).

1.3.1.1 Assessment of the Change in Frequency

For the base line case, the observed SG tube rupture rate due to loose parts is 0.011 per reactor year for plants with Westinghouse SGs. The data base is very limited in that only 2 events have occurred. In retrospect, had the three proposed requirements been in place, for one of the events (Prairie Island) either the inspection after maintenance of the QA accountability requirements would have detected the cause of the failure and for the other event (Ginna) either of the three requirements, alone or in various combinations, would have detected the objects before the event. Based upon this hindsight and the performance levels that are easily attainable by the three proposed requirements one would conclude that the probability of detection and prevention of future similar events is between 0.95 and 1.

Another concern is the presence of foreign objects that may be in steam generators. The one time inspection of the tube sheet, the peripheral tubes and flow lanes appears to be quite effective in detecting the foreign objects.

The three proposed requirements are not independent, especially the QA and inspection after maintenance. This conclusion is based on the belief that an effective QA program would include inspection. The LPMS and initial inspection are also not strictly independent as the calibration procedures for an LPMS includes measurement of background noise levels. An effective procedure should assure that the background noises are not due to foreign objects. Because of the lack of independence the estimates of the reduction in frequency should be carefully considered.

The approach was first to consider the combination of the QA and inspection requirements, then the effect an LPMS would have on the residual frequency. Note that as the requirements are stated, the inspection is required prior to LPMS, therefore an estimate of the reduction of the residual frequency after QA and inspection requirements was developed.

An ideal inspection and QA programs would detect all loose parts and foreign objects on the tube sheet or generated during maintenance. The inspection program would also detect any internally generated loose part if it caused damage to the free span of a peripheral tube, and if the tube were inspected, and if the results were properly interpreted. Since all parts causing SGTR have been left after maintenance and were found on the tube sheet, it is estimated that the detection probability of QA and inspection for parts capable of damage is at least 90 percent. Thus the change in frequency is a reduction due to the detection of loose parts by 0.9, or 0.0099 total per year. The residual frequency is 0.0011 per year.

The LPMS has the opportunity to detect internally generated loose parts and loose parts and foreign objects not detected by the QA and inspection requirements. The detection sensitivity of an LPMS is set to detect a 1/4 to 30 pound object impacting with 0.5 ft-lb of kinetic energy within 3 feet of the detector. The detection ability does not drop abruptly to zero for smaller parts or parts impacting with less energy. Thus, considering the characteristics of loose parts that could cause SGTR or leaks in a relatively short time, a reduction probability of at least 70% is estimated. The change in the residual frequency is from 0.0011 to 0.00033 or a change of 0.00077.

1.3.1.2 Radiological Impacts and Values

The occupational dose estimates for performing the ISI for loose parts, upgrading QA, and installation of LPMS were addressed above. These are summarized below.

Activity	Estimate of Occupational Dose
Requirement 1 Inspection	5-10 man-rem/inspection of one SG
Requirement 2 QA/QC	5-15 man-rem/reactor year
Requirement 3 LPMS	10-15 man-rem to install system/reactor

Inspection of one SG/refueling is assumed; therefore, for the average plant in three refuelings all the SGs would be inspected, incurring a cumulative occupational exposure of 15-30 man-rem. The frequency of modification to secondary side internals and the frequency of detection of flaws in the free span portion of peripheral tubes are not as great as that of the tubesheet area. For purposes of calculating occupation dose it is assumed that SGs require modification once every five years, on the average. In the event that a LPMS is not installed, the inspection would be performed periodically over the life of the reactor. Assuming 1.2 SG/yr. are inspected and there are 25 years remaining life, the cumulative occupational exposure is estimated to be at least 150-300 man-rem. If an LPMS is installed then the inspection dose is estimated to be between 40 and 80 man-rem.

In addition to the occupational dose resulting from the implementation of the requirements, there is a likelihood of avoided dose. The avoided dose is the dose that would be received if a SG had to be repaired. The occupational dose associated with repair of the Ginna SG was approximately 350 man-rem (16). The occupational dose for SG replacement is about an order of magnitude larger (17, 18). The expected value of the avoided dose is estimated by using the 350 man-rem value times the change in frequency of tube rupture, Δf, per year that results from the implementation summed over the remaining years of operation (25 years are assumed). Thus the avoided dose estimate is $\Delta f \times 350 \times 25$ or $\Delta f \times 8750$. In the baseline case, the frequency is 0.011 per year (19) and the change in frequencies are 0.0099 and 0.00077 for QA plus inspection and for LPMS, respectively. Estimates of the avoided occupational exposures are 87 and 7 man-rem, respectively.

The calculations for the avoided dose above assumes only repair of SG following tube rupture. The dose would be larger by about an order magnitude if each SGTR required SG replacement. Avoided doses were also calculated assuming that 10% of SGTR events requires SG replacement and the

doses are 165 and 13 man-rem for QA plus inspection and for LPMS, respectively. The occupation exposures and the avoided dose estimates are summarized in the following table.

Occupational Dose Impacts and Values
for a Typical PWR Plant in Man-Rem

Action	Impact Dose to Implement	Net Value Avoided Dose
ISI	40-80c	
QA	125-375	87-165a
LPMS	10-15	7-13[b]
TOTAL	175-470	94-178

a. Assumes that 10% of SGTR events requires SG replacement.

b. Assumes rupture requires no SG replacement.

c. Assumes LPMS installed; if no LPMS is installed the dose is 150 to 300 man-rem and total would be 275-675 man-rem.

1.3.1.3 Benefit/Cost Analysis

Benefit/cost analyses were conducted for ISI and QA; for ISI, QA and LPMS (assuming a new system would be installed); and for ISI, QA and an existing LPMS system. Benefits were defined as: avoided replacement power cost (ARP) less avoided fuel costs (AFC) plus avoided repair cost (ARC). The costs were calculated for implementation of ISI, QA, and LPMS: the benefits and costs were calculated for a 24-year remaining life of a plant. The cost of capital was assumed to be 3.77% and the cost of replacement power was assumed to be derived from coal which is escalating at 2% per annum.

The annual ISI cost is estimated as $1,920. This assumes 1.2 SG inspections per year; one SG a year is subject to ECT and once every 5 years

additional maintenance is performed. The cost for a mini-TV camera system is $28,500 (20).

QA costs are estimated to be a 10% increase in the inspection and maintenance costs. Using data from NUREG/CR-1490 this is estimated to be approximately 200 hrs/yr. or 0.1 man year/yr. Thus, QA cost is $1,500/yr assuming that the QC personnel loaded salary is $75,000 per year.

The cost of installing a LPMS system on the secondary side is estimated to cost $200,000 (includes materials, installation, calibration and training). One-eighth of a man year is estimated as the O&M cost, or, $9,375. Special alarm resolution costs ae estimated to be $35,000 per occurrence with a frequency of 0.33 to 1 per year.

The avoided replacement power cost is estimated to be 25 mils/Kwh plus a 10% add on. The forced outage is assumed to be 30 days, as was the case with Ginna and Prairie Island events. Thus a ARP cost is estimated to be $19.8M or $660,000/day. The AFC is estimated to be $.0078/Kwh or $5.6M for a 30 day outage.

The ARC is estimated to be $750,000. This assumes 10 man years of labor are expended to repair the SG with 5 man years at $50,000/yr. and 5 at $100,000/yr. This estimate is based on the size of repair crews at Ginna, the down time, and estimates for indirect support personnel. Estimates of actual man years could not be obtained.

To compute the net benefit of ISI and QA, the 25 year costs and the benefits were computed. The 25 year costs are approximately $29K (camera) plus $121K (QA labor) plus $31K (ISI labor) or a total cost of $181,000. The discounted value of benefits are $276M, $660M, and $1.016B for outage durations of 30, 60 and 90 days, respectively. The expected value of the benefit is the estimated reduction in frequency (0.0099) times benefits, or: $2.74M, $6.56M and $10M for assumed outages of 30, 60 and 90 days, respectively.

The net benefit of ISI, QA and LPMS, were computed from the 25-year costs and benefits. The benefits are the same; only the expected value of the benefit changes. A reduction in frequency of 0.01067 for an

expected benefit of $3.0M, $7.1M, $10.8M for outages of 30, 60 and 90 days, respectively are computed. The same 25 year QA cost ($121K) would be incurred but the ISI cost would be only $9K (because no recurring annual inspection would be required and only after maintenance). The 25 year LPMS costs are $200K installation, plus $155K (Tabor) plus $187K to $562K (for special alarm investigation) or a total of $542K to $917K. The net benefit of ISI, QA, and LPMS is $2.1-2.5M.

In the event that an LPMS is already installed, then the cost of an LPMS would be reduced as much as $200,000, in which case the net benefit would increase accordingly.

1.3.2 Public Risk

The change in risk to the public is calculated using the three accident consequences discussed in Section III.5. They are core melt, major and minor radiation release. The annual risk to the public is given as:

Risk = (cost or dose/event) x (probability of the accident given a tube rupture) x (annual rupture rate)

The change in risk is given by the same equation but with the annual rupture rate replaced by the change in the annual rupture rate. For the accidents the values for core melt are: cost $\$3\times10^9$; dose 2.7×10^6 man-rem; and probability of accident given a rupture 1.5×10^{-5}. For major radiation release the cost is $\$1\times10^7$, dose 2×10^3 man-rem and probability given a rupture 3×10^{-6}; and for a minor radiation release the cost is neglible (assume $\$10^4$), dose $\leq 2.3\times10^3$ man-rem, and probability given rupture 4×10^{-2}. Table 1-1 summarizes the reduction in risk to the public.

Although the secondary ISI, QA and LPMS requirements significantly reduce the probability of tube rupture due to loose parts, they contribute small public risk reductions.

1.3.3 Implementation

No impediment to a timely implementation schedule was identified. Data for this analysis were obtained from a number of companies supplying

Table 1-1 Summary of Public Risk Reduction

Action	Accident	Annual $	Annual Man-Rem	Life of Plant* $(1000)	Life of Plant* Man-Rem
Secondary ISI + QA	Core Melt	440	0.4	7	9.5
	Major Release	<1	$<10^{-3}$	<.7	1
	Minor Release	4	.9	<.1	22
LPMS (Given ISI + QA)	Core Melt	30	.03	.5	.5
	Major Release	-	$<10^{-5}$	-	<1
	Minor Release	-	.07	-	1.7

* Over 24-years remaining

services and hardware. The 1981 Nuclear News, Buyers Guide issue, has 15 listings under LPMS.

1.3.4 Alternatives

An alternative suggested upon examination of the values and impacts is to require only QA and inspection. Table I shows clearly that a greater net value ("benefit") is achieved with ISA and QA.

1.4 REFERENCES

1. Memo, T.A. Ippolito to G.C. Lainas, Forthcoming Meeting with Steam Generator Owners Group "Proposed Steam Generator Generic Requirements, July 22, 1982.

2. Letter, W.S. Little (NRC) to Commonwealth Edison Co., Inspection Summary., June 16, 1982.

3. NRC --- NUREG-0651.

4. NRC --- NUREG-0909.

5. Memos, L.B. Engle to Distribution, Daily Highlight, June 13, 1982, July 1, 1982.

6. Handout for Briefing, Operating Reactors Events Briefing, August 11, 1982, presented by R. Cilimberg.

7. NRC --- NUREG 0916.

8. Communication, S. Spector, Ginna Station.

9. NRC Staff, Briefing of CRGR, Justification of Letter to Licensees for Evaluation and Implementation of Loose Parts Monitoring Program in Accordance with Regulation Guide 1.133, July 1982.

10. NRC Staff, Draft --- NUREG-0844.

11. Personal communciation with H. Hansermman of Zetec.

12. NRC — NUREG-0886.

13. DeT George, L.O., to J.G. Keppler (NRC), Response to I&E Inspection, July 16, 1982.

14. R.C. Kryter, and C.W. Ricker, Characteristics and Performance Experience of Loose-Part Monitoring Systems in U.S. Commercial Power Reactors, NUREG/CR-0524, March 1979.

15. Personal communications with President of Physical Acoustics Corporation.

16. Personal communications with G. Zigler, Member of ASME writing group for development of standard for LPMS.

17. Personal communication with J. Lyon (NRC, Project Manager for Ginna).

18. NRC — NUREG-0692.

19. NRC — NUREG-0743.

20. Quotations from Sutter and Company, Inc. based on Hydro Products/Tetra Tech Co. Radiation Tolerant Scanner Television Camera Package, August 29, 1982.

2.0 VALUE-IMPACT ANALYSIS OF "INSERVICE INSPECTION PROGRAM" REQUIREMENT

2.1 SUMMARY

This section presents the proposed requirement and the basis for its selection and summarizes the results of the value-impact analysis.

2.1.1 Description

This analysis addresses the requirement proposed by NRC (1) that a revised program for inservice inspection of steam generator tubing will incorporate the following changes into the Standard Technical Specifications (STS) for each pressurized water reactor unit:

<u>Tube Inspection in U-Tube Steam Generators)</u> - Requirement 1

Inspection of tubes in U-tube steam generators will be a full-length inspection, including the hot side (hot leg), U-bend, and cold side (cold leg) of the tubing. This regulation does not require that the sample populations for hot leg and cold leg inspection be from the same tubes.

The current STS do not require inspection of the cold legs below the top support plate.

<u>Testing Frequency and Sample Selection</u> - Requirement 2

a. Each steam generator will be inspected at least once every 48 months.

The current STS allow inservice inspections to be limited to one steam generator on a rotating schedule if previous inspections indicate that all steam generators are performing in a similar manner. The current regulations also permit the interval between inspections to be extended up to 40 months if two consecutive inspections show that previously observed degradation has not continued and no new degradation has occurred. Under these

optimal conditions, the interval between required inspections could be as long as 160 months for a four-loop plant. The new requirement reduces the maximum interval to 48 months.

b. Plant technical specifications may be amended to identify special subsets of tubes which are independent of the general tube inspection population. Special subsets require 100% inspection. The results of the inspection of special subsets will not be used to classify the results of the general inspection or in meeting the minimum sample size for the general inspection.

There are three categories of inspection specified in the current STS. If the results of an inspection do not satisfy the criteria for a given category, the STS require continuing into the next category until either the category's criteria are satisfied or 100% of the tubes have been inspected. This approach does not recognize situations wherein well-defined localized groups of tubes (subsets of tubes) experience degradation because of a unique design feature or phenomenon. In such cases the licensee could be compelled to inspect larger numbers of tubes than required to address the specific problem. Identification of subsets of tubes will give a licensee more flexibility in this situation.

Supplementary Sampling Requirements - Requirement 3

The current STS specify supplementary sampling requirements based on the number or percentage of inspected tubes found defective or degraded. There are three categories of sampling sizes (C-1, C-2 and C-3) progressing from the initial 3% sample to the inspection of 100% of the tubes.

This new requirement essentially replaces the three current categories with two categories. The first category, the STS category C-1 specifying the initial 3% inspection size, remains unchanged. The second category is defined as follows:

If eddy current inspection pursuant to the requirements in Sample Selection and Testing indicates that (a) one or more tubes are defective (have defects with wall penetrations exceeding the plugging limit) or (b) 5% or more of the tubes inspected are degraded (have a previously undetected defect of 20% or greater depth or exhibit greater than 10% further wall penetration), additional inspection shall be performed as follows:

In each steam generator where the above limits were exceeded, additional tubes shall be inspected. The sample size for this inspection shall be either 100% of the tubes in the steam generator or shall be based on plant-specific analyses defining the limiting tolerable number of tube failures. Analyses of postulated loss of coolant accident and main steamline breaks (within and outside containment) with concurrent steam generator tube failures would be performed to determine the tolerable number of tube failures.

The sample size required to be inspected to ensure that a probability no greater than 5% exists of accepting a generator with greater than the limiting number of defective tubes is then determined by the methods in NUREG/CR-1282.

This second category of (supplementary) inspection may be limited to a partial length inspection of each tube, providing the inspection includes those portions of the tubes where imperfections were previously found. Furthermore, this supplementary inspection may be limited to subsets of tubes if it can be shown from previous inspection results or from unique structural or mechanical design that the degradation is limited to well-defined areas of the steam generator tube bundle.

Denting - Requirement 4

A gauging or profilometry inspection shall be performed if the standard diameter eddy-current probe cannot pass through a tube. The objective of this inspection is to determine the magnitude and extent of tube denting. Applicants and licensees will submit an inspection program

for denting for staff review and approval. This program, which will be included in the plant STS, will include criteria for establishing the scope of inspections and an acceptance criterion or denting limit based on tube restriction or wall strain.

The current STS have no requirements related to inspection for denting.

Inspection Intervals - Requirement 5

An unscheduled inspection pursuant to the STS is required if a plant is shut down to repair primary-to-secondary leakage, regardless of whether or not the leakage exceeds the leak rate limit in the STS. An unscheduled inspection is not required if the leakage is caused by "leaking plugs".

The current STS do not require an unscheduled inspection if the leak rate is below the limit in the plant technical specification.

Acceptance Limits - Requirement 6

A definition of the denting limit shall be added to licensee's technical specifications to state that the denting limit means that amount of tube restriction (if gauging inspections are being performed) or strain (if profilometry inspections are performed) beyond which the tube must be plugged.

The current STS do not include an acceptance limit for denting.

Reporting - Requirement 7

The current requirement in the STS for the prompt reporting of inservice inspection results prior to the resumption of power operation is related to inspection results falling into Category C-3. With the consolidation of the inspection categories discussed earlier, it is necessary to redefine the requirement for the reporting of such information.

Therefore, licensee's technical specifications shall also be changed to require that if, in the inspection pursuant to the Sample Selection and Testing section, 5% of more of the inspected tubes are degraded or exhibit greater than 10% further wall penetration since the previous inspection or if any tube has imperfections or denting that exceed the plugging or denting limit, the results of the completed inspections shall be reported to the NRC before power operation is resumed.

2.1.2 Need for Action

The current ISI requirements for the tube inspection have generally been effective, although their theoretical basis is limited. The required 3% tube inspection sample coupled with the technical specification leak rate limits have been generally successful in identifying tube degradation. This success is due largely to the fact that the primary modes of degradation affecting operating steam generators are mechanistic in nature. They result either from adverse chemical conditions, improper mechanical design, improper materials selection, or a combination of these parameters. The result is that when improper conditions occur, the degradation is not generally isolated but effects a large number of tubes. Thus, the initial 3% sample size is sufficient to identify those steam generators which are experiencing general degradation. Because of this, the 3% inspection has also proven sufficient to determine if a steam generator tube leak is the result of an isolated incident or if it was the result of a significant mode of general degradation.

In general, the operating experience with steam generators has shown a more rapid degradation of tube integrity than originally anticipated. This degradation has occurred through a wide variety of physical causes and failure modes(2). The degradation is also quite non-uniform, because the behavior of one steam generator may not be representative of the behavior of other steam generators in the same plant. The overall result of the rapid degradation in the tube integrity has been more frequent and more extensive ISI than was planned in the plant standard technical specifications and in Regulatory Guide 1.83. The proposed changes to the plant STS are largely a result of the latest operating experience with steam generators.

2.1.3 Summary of Values and Impacts

Five major changes to ISI procedures are evaluated in this value/impact analysis. These changes are (i) cold leg inspection, (ii,a) a maximum interval of 48 months between inspections, (ii,b) definition of tube subsets, (iii) changes in sample population for supplementary inspection, (iv) inspection for denting, and (v) unscheduled inspections for primary-to-secondary leaks. The results of the value/impact analyses are summarized in Table 2-0. Generally, the requirements have favorable economic and dose benefit impact ratios. Only the full length inspection occupational doses exceed the expected value of the avoided occupational doses.

The short-term impact of the maximum interval of 48 months between inspections is that perhaps 5% of the steam generator population will require an initial inspection in order to conform to the 48-month schedule. The long-term impact will be negligible, because the average interval between inspections is currently 2 to 3 years.

We conclude that there is substantial value to a maximum interval of 48 months between inspection, with only minor impact on current inspection practices. The financial impact on the plants which require inspection can be minimized by extending the interval for the required inspection up to the next refueling outage.

The definition of special subsets of tubes permits greater flexibility during ISI. The flexibility could reduce the cost of ISI without compromising the validity of the initial 3% sample. This change in the STS has an obvious value with not negative impacts.

The fifth requirement is for an unscheduled inspection whenever a plant goes off-line due to the primary-to-secondary leakage rate. In general, leakage to the secondary side indicates degradation and possibly a potential tube rupture. Hence, an unscheduled inspection is appropriate to define the modes of degradation and to repair leaking tubes in the steam generator. No quantifiable benefits are known at this time. The belief is that leaks will proceed until a scheduled outage or until they exceed technical specification. At such time the steam generator will be inspected to determine the status of degradation that exists.

Table 2-0 Summary of Impacts and Values Over 24 Years Life of a PWR for the Inservice Inspection Requirement.

Requirement	IMPACTS: Occupational Exposure (man-rem)	IMPACTS: Present Worth Costs ($M)	VALUES: Avoided Exposures (man-rem) Occupational	VALUES: Avoided Exposures (man-rem) Public	VALUES: Avoided Present Worth Cost ($M) Industry	VALUES: Avoided Present Worth Cost ($M) Public
a) Full-length Inspection	40*-300	.1 - .2	7.2		4.3****	
b) Sub-set Selection/ Interval Change	neg.	neg.	neg.		not quantified	
c) Supplementary Sampling	neg.	.2*	30 - 150		1.3 - 5.6	
d) Denting/Denting Limits	24	.3 - 1.0**	20 - 40	Neg 1	.7 - 1.4	Neg 10^{-4}
e) Unscheduled ISI Upon Shutdown	10 - 50	5 ***	not quantified		not quantified	
f) Reporting	neg	neg	none		none	

* Does not include one-time optional plant-specific analysis cost of 100-150K.

** Only plants with extensive denting (25% of CE&W SGs) require recurring gauging costs of 15-45K/yr.

*** Assumes shut-down for repair when leak rate does not change.

**** Only 1% reduction in rate of forced outages.

2.2 APPROACH

2.2.1 Objective

The objective of this study is to perform a value/impact (V/I) analysis on the proposed changes to plant technical specifications for inservice inspections. The value/impact analysis as defined here is concerned with three areas: cost, dose, and probability change. That is, the key questions during the V/I analysis are:

- What is the change in cost associated with new ISI procedures?
- What is the change in dose associated with new ISI procedures?
- What is the change in probability of steam generator tube leakage or tube rupture associated with the new ISI procedures? How does this change in probability affect the risk to the public?

The answers to these to these questions are then interpreted as values and impacts. Typical values are lower radiation exposure during ISI, lower probability of steam generator tube leakage or rupture, and lower reactor operating costs from better ISI. Values may also result from the detection of new modes of degradation and from reduced risk to the public. Typical impacts are increased cost and increased radiation exposure from an expanded inservice inspection program.

2.2.2 Scope

The particular aspects of the cost, dose, and probability issues which were addressed this study are:

- Detailed costs of inservice inspections
- Radiation exposure during inservice inspections
- cost of unanticipated outages, if any
- physical limitations of ISI equipment, if any
- cost of supplemental analyses if any, and
- change in probability of tube leakage or tube rupture.

Finally, this study evaluates the incremental changes in cost, dose, and probability, using current industry practices as a baseline. Current industry ISI procedures are generally more extensive than the ISI procedures required by the plant technical specifications, so this difference is an important one.

2.3 RESULTS OF ANALYSIS

2.3.1 Industry

In this section the impact on the industry is assessed. The assessment is organized by requirement. Cold leg inspection is discussed in Subsection 2.3.1.1, Subset Selection and ISI Interval Reduction Subsection 2.3.1.2, etc.

2.3.1.1 Cold Leg Inspection

Recent operating experience with steam generators has shown that the cold leg side of steam generator U-tubing is susceptible to various modes of degradation, such as wastage, pitting, denting, and fretting wear. The current STS require inspection of the hot leg side and U-bend of steam generator tubing. The proposed change to plant STS will also require inspection the cold leg side, at least for the initial 3% sample population.

Current industry practice on cold leg ISI is summarized in the NRC prepared tables, Operating Experience with Westinghouse PWR Steam Generators through January 3, 1982 and Operating Experience with Combustion Engineering PWR Steam Generators through January 4, 1982. Similar tables exist for Babcock & Wilcox (B&W) reactors (5), but are not considered here because B&W steam generators (SG) are not of the U-tube design. Based on these tables, the following picture emerges:

For Westinghouse (W) Plants:

- The cold legs are always inspected at 32 steam generators
- The cold legs are sometimes inspected at 27 steam generators
- The cold legs are not inspected at 4 steam generators
- Data are not reported at 21 steam generators
  (ISI data are not split into cold leg ISI and hot leg ISI)
- ISI has not been performed at 21 steam generators.

For Combustion Engineering (CE) Plants:

- The cold legs are always inspected at 7 steam generators
- The cold legs are sometimes inspected at 2 steam generators
- The cold legs are not inspected at 8 steam generators.

Approximately 50% of the steam generator population has some cold leg examination during ISI.

The major impacts from requiring cold leg inspection will lie in two areas: (i) ECT equipment must be moved to the outlet outside of a steam generator, and (ii) additional time is required for cold leg ECT. The ECT equipment must be moved because the ECT probe cannot pass through the smaller radius bends in Westinghouse and Combustion Engineering steam generators. For example, the first nine rows of Westinghouse steam generators will not pass the standard ZETEC probe (6), so ECT equipment must be moved in order to inspect the cold legs.

The estimated dose for moving the ECT equipment to the outlet side is based on the following estimates (7):

- preparation of area: 2 men for 10 hours,
- moving ECT equipment from inlet to outlet: 2 men for 2-4 hours,
- installation and removal: 2 men for 45 minutes on the manway and of ECT equipment: 1 man for 15 minutes in the channel head
- dose in channel head: 4-30 rem/hr
- dose in manway: 0.4-3 rem/hr
- dose in preparation and moving: 0

The estimated dose for installation of ECT equipment on the outlet side is then 1.6 to 12 man-rem per steam generator. This estimate agrees with data in (8), which gives 1.3 to 8.0 man-rem for Westinghouse Series 51 steam generators and 2.5 to 9.9 man-rem for Combustion Engineering steam generators. Installation of ECT equipment on the outlet side will approximately double the radiation dose from ECT testing.

The incremental cost for installation of ECT equipment and testing on the outlet side is broken into (i) costs for moving and installing the

equipment and (ii) costs for the additional testing. The costs for moving and installing the equipment assumes $45/hr (7), for 25.75 to 29.75 man-hours (see above). Rounding up to 30 man-hours, this element of the cost is $1,350.

The additional cost for testing is based on ZETEC data (5):

- ECT rate for hot leg side only: 60 tubes/hour
- ECT rate for hot leg side + U-bend 40 tubes/hour
- ECT rate for full length testing: 20 tubes/hour
- Fixed costs (for transportation, equipment, etc.): $65,000
- Testing one SG with 2 crews in 10 hour shifts: $15,000/day
- Testing two SG's with 4 crews in 10 hour shifts: $22,000/day
- Testing three SG's with 6 crews in 10 hour shifts: $28,000/day
- Testing four SG's with 9 crews in 10 hour shifts: $33,000/day

Testing is assumed to proceed in parallel. Full-length testing refers to inspection of the hot leg, U-bend, and cold leg.

Consider testing the initial 3% sample for the hot leg plug U-bend versus full length testing in one steam generator. The following table defines the increment in hours and dollars for this testing:

Plant Type	No. of tubes per SG	3% Sample	Add'l hours for full-length ECT	Addtional dollars for full-length ECT
W, 4 loop	3400	408 tubes	10 + 4 hours	$10,500.
W, 2 loop	3300	198 tubes	5 + 4 hours	$ 6,750.
CE,2 loop	8500	510 tubes	12.75 + 4 hours	$12,600.

In the table, an additional 4 hours have been added to the ECT hours because the ECT team is idle while the equipment is transferred from the inlet to the outlet side. Hours were converted to dollars at $750/hour, based on $15,000/day with two 10-hour shifts. Other data in this table are based on (8), page 55.

The total incremental cost for cold leg ECT on the initial 3% sample is then between $8,100 and $14,000 per steam generator. The base cost for a minimal ECT inspection of a 3% sample is the fixed cost ($65,000) plus one day of testing ($15,000) for a total of $80,000. Full-length testing increases the minimum cost by 10% to 18%. More typically, ECT on two steam generators requires 4 days, for a testing cost of $153,000. The incremental cost for cold leg ECT on two generators is $16,000 to $28,000, or again 10% to 18%.

Note that the cost estimates are concerned with incremental cost for additional ECT. Plant support costs have been included only in terms of installation and removal of ECT equipment.

All data are for a 3% sample; although extensive cold leg testing is required on certain plants, this is rather plant-specific and difficult to include in a generic analysis.

Qualitative values for the proposed change in plant technical specifications are clear. The proposed change will standardize ECT inspections of the cold leg side, a known location for tube degradation. Detection of these defects will reduce the probability of a leak or a tube rupture on the cold leg side of the tubing. This reduction in probability leads to fewer unanticipated outages from steam generator leaksand fewer tube ruptures on the cold leg side.

2.3.1.1.1 Reduction in Frequency

No previous tube failures have occurred on the cold leg side and little information is available on potential tube problems there. Thus benefits and dose reduction estimates can be examined parametrically. The range of the parametric variation is from 1 to 25% reduction in the frequency of forced outages due to leakage. The base-line frequency of occurrence is 0.188 per year.

2.3.1.1.2 Occupational Dose

The occupation dose incurred as a result of implementing the recommendation is at least 1.6 - 12 man-rem per year (one steam generator).

The avoided occupational exposure is due to avoidance of leak repair. The annual avoided occupation doses estimated for a 1, 10, and 25 percent reduction of frequency of forced outage due to leakage are .3, 3, and 7 man-rem respectively.

2.3.1.1.3 Cost

The incremental cost for implemention of the proposed full length inspection is $9 – 15K per year or $140 – 234K over 24 years. If, during a forced outage a full length inspection is required the ECT time is extended by one day. The annual avoided cost estimated for a 1, 10, 25 per cent reduction of frequency were $.3M, $2.8M, and $6.9M, respectively. These avoided costs assume a full length inspection is performed when a forced outage occurs. For full length inspection during a scheduled outages it is assumed that inspection is accomplished off the critical path and no benefit accrues from avoided replacement power cost, etc. The benefits over 24 remaining years of life an $4.3, $4.3M, $110M for 1, 10, 25% reduction frequencies respectively.

2.3.1.2 Subset Selection and ISI Interval Reduction

Recent operating experience with steam generators has shown that degradation can occur over a shorter time scale than the maximum allowable interval of 80 to 160 months between inspections. The proposed change to plant technical specifications requires an inspection of each steam generator at least once every 48 months.

All steam generator inspections as of January 1982, are listed in tables (3), (4), and (5). Based on these tables, the next compulsory inspection data for all steam generators, assuming a 48-month interval between inspections, is summarized in Table 2-1.

The distribution of dates for the next compulsory ISI, as shown in Table 2-1, is very important. Eighty-two percent of the operational steam generators are not due for a compulsory ISI until 1984 or 1985. That is, many steam generators have been inspected within the past two years and will not be due for ISI until 1984 or 1985.

Table 2-1

Next Inspection Date for Steam Generator (SG) Population
With 48-Month Interval Between ISI

Date	No. of SG's due for ISI	% of Total	Details
up to 1/82	1	1	1 SG at Yankee Rowe, due 7/81
1/82 to 6/82	3	2	1 SG at Zion 2, due 3/82 1 SG at Maine Yankee, due 6/82 1 SG at Cook 1, due 6/82
7/82 to 12/82	5	4	1 SG at Beaver Valley due 9/82 1 SG at Fort Calhoun 1, due 10/82 2 SG's at Yankee Rowe, due 11/82
1/83 to 12/83	14	11	
1/84 to 12/84	25	20	
1/85 to 12/85	78	62	

Presently among the steam generators that are due for inspection, one unit is beyond the 48-month interval and three units may be beyond the 48-month interval. We have not attempted to update the tables to reflect more recent ISI because the overall distribution is more important than the details for one plant. Note that all the plants which would be due for compulsory ISI in 1982 have experienced little or no degradation or leakage in their steam generators.

Based on Table 2-1, approximately 5% of the steam generator population will require an initial change in their ISI schedule to conform to the maximum inspection interval of 48 months. These inspections, on 4 to 9 steam generators, will incur costs and radiation exposures as documented in the preceeding subsection.

Beyond the initial adjustment, which is a one-time event for a few steam generators, the impact of the proposed change can be evaluated by analyzing the average interval between ISI for the steam generators at various plants. Yankee Rowe appears prominently in Table 2-1 and, the average interval between ISI was evaluated for this plant. The result is that each steam generator is inspected on the average every 2.6 years, with a minimum interval of 6 months and a maximum interval of 10 years.

A similar situation exists for two other plants in Table 2-1: Zion Unit 2 and Cook Unit 1. The average interval between inspections at Zion Unit 2 is 2.5 to 3 years. The average interval between inspections at Cook Unit 1 is approximately 2 years.

The 4-year interval between inspections appears quite reasonable, because it will force a more uniform inspection interval among all the steam generators at these plants and with minor impacts on long term cost or radiation exposure. It is difficult to assess the exact cost impact and radiation exposure from this change, but it would appear to be quite small because the total number of inspections is not being increased.

The second change under Sample Selection and Testing is the specification of special subsets of tubes for 100% inspection. The value of this change is that utilities and ECT personnel will have the flexibility to adjust the ISI sampling technique for the degradation mechanisms in a

particular steam generator. This flexibility to define subsets can only reduce the time, cost, and radiation exposure during ECT, without compromising the accuracy of the statistical sample for steam generator ISI.

Benefits, economic and radiological, from these proposed requirements are somewhat intangible. Quantification has, of necessity, been based on parametric estimates. Realized benefits are plant specific, and precise quantification requires detailed data whose collection was beyond the scope of this effort.

2.3.1.3 Supplementary Sampling Requirements

The new requirements for supplementary sampling replace the three current sampling categories, C-1, C-2, and C-3, with two new categories. The first category of the new requirements is identical to category C-1 of the current technical specifications. The second category is defined as follows: if ECT on the C-1 sample shows one or more tubes are defective or 5% or more of the tubes are degraded, then a supplementary inspection is required. The sample size for this inspection will be 100% of the tubes or will be a statistically derived sampling plan, based on plant-specific analyses defining the limiting tolerable number of tubes using methods in (8), which assumes that a probability no greater than 5% exists for accepting a generator with greater than the limiting number of defective tubes.

The limiting tolerable number of tube failures is the maximum number of steam generators tubes which can rupture during 3 (postulated) accidents while still permitting the plant to operate within the established guidelines for fuel cladding temperature and off-site radiation release. The postulated accidents are a loss of coolant accident, a main steam line break within the containment, and a main steam line break outside the containment. Further details of these analyses and preliminary results are presented in (9).

There are two main impacts from the proposed change: (i) the number of tubes for ECT may be different, and (ii) plant-specific analyses must be performed by the applicants and licensees. The second impact is addressed first. The plant-specific analyses are performed in order to

identify the limiting number of tubes that can rupture during an accident and still meet the established guidelines.

The number of limiting tube failures is an important parameter. Analyses by the NRC indicate a range of 1 to 13 for the limiting number of tube failures. With limiting tube failures of 5 or less the statistical sampling plan is equivalent to 100% testing. If the number of limiting tube failures is ten or more, statistical sampling plans are similar to the current categories. Beyond 20 limiting tube failures, the initial sample fraction drops below 16%. This small sample would reduce the effort for ECT. However, 20 limiting tube failures is beyond the range of values for existing calculations.

Thus, with the proposed supplemental sampling requirement the number of tubes that must be inspected with ECT is very likely to increase. While the sample size is expected to increase, the amount of increase is difficult to estimate. The difficulty is because the increase will be plant specific. In plants that experience very little steam generator tube degradation the sample size will not change. In plants with significant degradation, the sample sizes under the existing and proposed requirement will likely be 100%, or almost. (Note, some plants already perform 100% testing as a matter of policy - Reference 6.) The principal difference between the current and proposed requirements would be for plants with an intermediate amount of degradation, in which case the proposed requirement would lead to a 100% sample instead of on the order of 25%.

Although is is difficult to estimate the increase in sample size it is relatively easy to bound the effort. A 100% inspection of the remaining 2900 tubes, at (say) 40 tubes per hour for a partial inspection requires 3 additional days of testing time. The incremental cost for 100% inspection is then $15,000 per day for three days, or $45,000 per steam generator. Approximately one day would be required to inspect a 20-25% sample. A bound on the cost difference is $30,000.

The increase in radiation dose from requiring a 100% inspection should be minimal because additional time inside the steam generator is not required.

Plant-specific analyses would probably require 6 man-months of effort per plant, assuming some generic modeling of plants. In addition $25,000 may be required for computational expense, and 3 man-months for review and approval of the analyses. The cost per plant is estimated as $100,000 to $150,000.

The value of the increased sampling is the possible elimination of some of the forced outages due to leakage.

2.3.1.3.1 Estimation of the Change in Frequency of Forced Outage

Any change in frequency, using present ECT, should be proportional to the increase on sample size. Without detailed information on the sample sizes presently being used across the industry an estimate of the increase is difficult to specify. However, for those plans with few and several degraded tubes there is no difference. Based upon information from informal surveys and summary data in (2) it is estimated that the increase would on the order of 10 to 30 percent across the industry. Assuming that ECT techniques can detect at least 50% percent of defects that can lead to leakage in the next cycle one would estimate the frequency reduction to be on the order of 5 to, perhaps 20%. The present industry average for forced shut downs due to leakage, the frequency is 0.188/yr. Thus a reduction of 0.009 to 0.038 is estimated.

2.3.1.3.2 Radiation Dose

The occupational dose incurred to implement the requirement is negligible. The estimated avoided occupational dose is from 1 to 5 man-rem per year and 30 to approximately 150 man-rem over 24 years.

2.3.1.3.3 Cost

The cost increment required to perform the inspection is bounded by approximately $30,000 per year (assuming only one steam generator is inspected). On the average perhaps 1/3 to 1/2 of the time additional inspection would be incurred, thus an annual average cost is $10 - 15K for

inspection. If plant specific analyses are performed, a one time cost of $100 - 150K is estimated. The estimated avoided cost due to avoidance of forced shut down due to leakage, is estimated to be between $.1 and .4 million per year.

Over a 24 year remaining plant life the present worth of the avoided costs are between $1.3 and 5.6 M, and the implementation cost approximately $.2 M for additional inspection plus the cost of plant specific analyses (if chosen). Thus, use of improved ECT techniques has a favorable economic (and occupational dose) benefit/cost ratio.

2.3.1.4 Denting

Since 1975, the deformation or denting of steam generator tubes has occured at many Westinghouse and Combustion Engineering plants. Current codes and regulations do not address inspection methods for quantifying tube denting. The existing ECT methods are capable of detecting the initial onset of denting. However, the magnitude of large dents cannot be quantified by ECT.

The value of the proposed change is that approved inspection plans for denting will be established for all facilities. Denting is an important degradation mechanism is steam generators. Denting (alone) can enhance stress corrosion cracking, leading to through-wall cracks and leaks at tube-to-support-plate junctions. Denting, combined with flow slot hourglassing (a deformation of the rectangular flow slot in tube support plates), caused U-bend stress corrosion cracking and led to the steam generator tube rupture at Surry Unit 2 in September 1976 (11). Detection and monitoring of denting must be an important part of a steam generator ISI program.

The principal technique for monitoring the progression of denting is mechanical probing of tubes with ECT probes of different diameters. This probing technique is called gauging. Typical probe diameters for gauging are 0.72-inch, 0.65-inch, 0.61-inch and 0.54-inch. Plugging criteria for degraded tubes are based on the results of gauging. Severely dented tubes are usually plugged because these tubes are most likely to develop stress-corrosion cracks and leakage ((9), page 5-11).

An alternate technique for monitoring the progression of denting is to measure the shape or profile of the tube cross section. This measurement technique is called profilometry. Profilometry, which is more accurate than gauging, is not in widespread use at Westinghouse plants (7) and will not be discussed further.

The proposed change to plant technical specifications requires that all applicants and licenses shall submit an inspection program for denting for staff review and approval. This program, which will be included in the plant technical specifications, will define the scope of gauging or profilometry inspections and will define acceptance criteria (or limits) for denting, beyond which a tube must be plugged. This program will be implemented if and when the standard diameter ECT probe cannot pass through tubes in the steam generator.

The incidence of denting in operating plants is summarized in (3) and (4). These tables show that for:

Westinghouse plants:

7 plants with 23 steam generators have experienced extensive denting
2 plants with 4 steam generators have experienced moderate denting
9 plants with 30 steam generators have experienced minor denting
14 plants with 52 steam generators have experienced no denting.

Combustion Engineering Plants:

1 plant with 2 steam generators has experienced extensive denting
1 plant with 2 steam generators has experienced moderate denting
5 plants with 11 steam generators have experienced minor denting
1 plant with 2 steam generators has experienced no denting

B&W plants have not reported any denting to date ((1), page 13). The definition of extensive, moderate, and minor denting is contained in (4). Note, approximately 25 percent of the CE and W plants would be subject to gauging or profilometry.

The impact from the proposed change in STS will lie in two areas: (i) preparation of an approved ISI program for denting and (ii) implementation of this program if denting occurs.

Preparation of the ISI program is assumed to require 1/2 - 1 man month per plant or $5 - 10K per plant. Preparation of this ISI plan will require interaction between the applicant or licensee and the NRC staff. This interaction may add a man-month to the total effort.

The cost increment from implementing a gauging program for denting is estimated to be approximately the same as the cost for ECT testing. The equipment for gauging is the standard ECT equipment with probes of various sizes. Gauging might be faster than ECT because no data interpretation is required; on the other hand, several tube gaugings may be required to bracket the size of the dents. When required, Costs for the gauging inspection are estimated to be the same as costs for ECT.

The increment in radiation exposure from a gauging inspection results from 1 man, on the steam generator manway, reaching into the channel head to change the ECT probe. Assuming each probe change requires 3 minutes on the manway and 20 seconds to reach into the channel head to change the probe, then three probe changes results in 0.06 man-rem to 0.51 man-rem of whole body dose plus 0.07 rem to 0.5 rem to the hand. These estimated doses are small compared to the typical exposure during ISI of 1 to 10 man-rem per steam generator. If gauging is not performed in conjunction with ECT, then the additional radiation exposure is equivalent to an additional ISI.

2.3.1.4.1 Frequency Reduction

The base line frequency for leaks, due to denting, between .1 and .3 gpm is 0.030/yr and for leaks greater than .3 gpm is .004/yr. Taking the forced shut down frequency as greater than .3 gpm frequency plus one half the frequency in the .1 to .3 gpm range a frequency of 0.019 per year is obtained. With appropriate denting limits a 25 to 50 per cent reduction is estimated. This corresponds to a reduction of 0.005 to 0.010 events per year.

2.3.1.4.2 Radiological Dose.

The occupational dose due to implemention of the denting requirement is on the order of a man-rem/year or 24 man-rem over a 24 year remaining life. The estimate of annual avoided dose is the frequency reduction times 150 man-rem, which is the average dose for repair and maintenance. The estimate of annual avoided dose is 0.75 to 1.5 man-rem. Over 24 years the cumulative avoided dose is from 20 to 40 man-rem.

2.3.1.4.3 Cost.

The cost to implement is 5-10K per plant for preparation of a program and, when needed, the equivalent of 1 to 3 days additional ECT, thus, when needed, a cost of $15 - 45K per year or $.3 - .1 M over 24 years. The avoided costs of forced shut downs due to leaks are estimated to be between $.1 and .2 M assuming a 2 day forced shut down or .0 - 1.4 M assuming a 14 day forced shutdown over 24 years.

2.3.1.5 Inspection Intervals

The current STS do not require an unscheduled inspection in the event of a plant shutdown for primary-to-secondary leakage below the leak rate limits in the technical specification. The proposed change to the plant technical specification will require an unscheduled inspection if a plant shuts down for a primary-to-secondary tube leak, regardless of the magnitude of the leak rate.

The impact of this change on current industry practices can be estimated from the historical data on operating experience with PWR steam generators (3), (4), and (5). These tables show the following:

Type of Plant	No. of Inspections which Meet or Exceed Category C-1	No. of Additional Inspections which would have been required by the proposed change
W	343	57
CE	60	0
B&W	60	22
TOTAL	463	79

The total number of inservice inspections would have increased by 79. This is equivalent to a 17% increase in the number of ISI's for the total population of steam generators.

The 17% increase in the number of steam generator inspections will result in a 17% increase in radiation exposure during ISI, assuming the inspection are of the same type and duration. The 17% increase in ISI will also result in a substantial increase in operating costs because these inspections require an unanticipated outage.

The cost differential can be evaluated as follows. The current industry practice is to perform a leak test on the appropriate steam generator. Testing for leaks and plugging the leaking tubes can usually be accomplished within a 24-hour period. If an unscheduled ECT inspection is also required during the outage, then there will be fixed costs of $65,000, approximately 3-1/2 days of ECT testing at $15,000 per day, plus replacement power costs for 3-1/2 days. The minimum net replacement power cost is 2-1/2 days, 3-1/2 days for ECT less 1 day current practice. Hence, a minimum cost of $1.8 M. Occupation dose for ECT is 1.5-12 man-rem per SG.

A value of this regulation is that primary-to-secondary leakage is usually associated with some form of tube degradation. The degradation may be localized or extensive; ECT can determine the extent of the degradation and, perhaps, avoid a potential tube rupture. To a large degree this value is intangible.

Presently some utilities will shut down and plug a leak that is less than technical specification limits just to avoid having to perform ISI on the steam generator if the leak goes to the limit. According to the above calculation this practice maybe worth at least $2 M to the utility if it is reasonably certain that the leak would go to the limit. On the other hand, if the leak is indicative of a change of status of the steam generator such a practice, while perhaps of short term benefit, can lead to more severe problems in the long term.

It is believed that with this new requirement there will be no incentive for the shutdown to repair a small leak. The leak will be monitored and either will be repaired at the next scheduled outage or the leak will increase until the technical limit is reached and then will be repaired during a forced shutdown with ECT being performed. In either case the status of the steam generator is ascertained and the uncertainty as to the actual "health" of the steam generator reduced. No specific benefits are quantifiable at this point.

2.3.1.6 Acceptance Limits

The value/impact of the acceptance limit for denting was discussed in Subsection 2.3.1.4.

2.3.1.7 Reporting

The proposed change for reporting requirements is consistent with the redefinition of supplementary sampling categories. This change should produce an increase in reporting costs because all inspections beyond Category C-1 must now be reported to the NRC. Now, only category C-3 inspections are reported. The increase in costs for inservice inspections should be negligible.

2.3.2 Public Risk

Generally each of the above requirements can rduce the probability of SGTR and thereby reduce public risk. The requirements would be most effective in reducing the non-loose part/foreign object modes of

degradation that lead to rupture. No specific frequency reduction factor was estimated but it is believed to be no greater than 20%. Since the frequency of SGTR for the loose part mode is comparable to cracking and wastage the public risk reduction for ISI would be upper bounded by 0.2 times the public risk reduction for loose parts (which is small). Thus, the public risk reduction for ISI is neglible, 10's of dollars annually and 1 man-rem in 24 years.

2.3.2 Implementation

Many of the proposed requirements are being implemented already. No impediment is identified to the timely implementation of this proposed ISI requirement.

2.3.3 Alternatives

No substantive alternatives are identified. Minor variations of various alternatives are identified that may avoid some near term impacts. They are:

- If an inspection is required for compliance with the 48 month requirement allow it to be performed at the next scheduled outage.
- Make the full length inspection requirement only apply to scheduled ISI, i.e., not required during forced outage.

2.4 REFERENCES

1. T. Ippolito (NRC) to G.C. Lainas (NRC) Memorandum, "Forthcoming Meeting with Steam Generator Owner's Group – Proposed Steam Generator Generic Requirements", July 22, 1982

2. C.Y. Cheng, et al., "Steam Generator Tube Experience", NUREG-0886, U.S. Nuclear Regulatory Commission, Washington, D.C., February 1982.

3. Summary published as Table 1 in NUREG-0886 (Reference 1, above). Detailed data tables for each plant are currently unpublished, but are available from the NRC.

4. Summary published as Table 2 in NUREG-0886. Detailed data tables for each plant are currently unpublished, but are available from the NRC.

5. Summary published as Table 3 in NUREG-0886. Detailed data tables for each plant are currently unpublished, but are available from the NRC.

6. Private communication from Mr. Howard Hausermann of ZETEC.

7. Based on data and experience of Mr. Pat Leonard, SAI Rockville, and Mr. Howard Hausermann, ZETEC.

8. G.E. Zims, et al., "Some Aspects of Cost/Benefit Analysis for Inservice Inspection of PWR Steam Generators," NUREG/CR-1490, U.S. Nuclear Regulatory Commission, Washington, D.C., May 1981.

9. R.G. Eastering, "Statistical Analysis of Steam Generator Inspection Plans and Eddy-Current Testing", NUREG/CR-1282, U.S. Nuclear Regulatory Commission, Washington, D.C., August 1980.

10. J. Strosnider, Jr., et al., "Resolution of Unresolved Safety Issues A-3 A-4, and A-5 Regarding Steam Generator Tube Integrity", NUREG-0844, U.S. Nuclear Regulatory Commission, Washington, D.C., December 1981.

11. D.G. Eisenhut, et al., "Summary of Operating Experience with Recirculating Steam Generators," NUREG-0523, U.S. Nuclear Regulatory Commission, Washington, D.C., January 1979.

12. L.B. Marsh, "Evaluation of Steam Generator Tube Rupture Events", NUREG-0651, U.S. Nuclear Regulatory Commission, Washington, D.C., March 1980.

3.0 VALUE IMPACT ANALYSIS FOR "IMPROVED EDDY CURRENT TECHNIQUES" REQUIREMENTS

3.1 SUMMARY

This section discusses the requirement and the basis for it's selection and summarizes the results of value-impact analysis.

3.1.1 Description

This analysis addresses the requirement proposed by NRC (1) that the following additions shall be included as part of the test procedure for inservice Eddy Current Testing (ECT) of PWR steam generator tubing in order to utilize more fully diagnostic capabilities.

1. Eddy current testing techniques in data evaluation techniques which are capable of eliminating tube support plate, tube sheet, denting, or other similar unwanted signal interferences and discriminating among multiple defects shall be used in all steam generator inservice inspections.

2. Eddy current probes providing the capability to perform both absolute and differential coil inspection shall be utilized. Separate probes may be utilized to implement this dual capability.

3. Eddy current data from both the differential and absolute channels shall be evaluated as part of the overall data evaluation program.

4. In addition to calibration standards required by Article IV-3200 of Section XI of the ASME code, an additional standard shall be employed with simulated wear or fretting type flaws to ensure a conservative interpretation of signals for which fretting or wear may represent a possible source of the signals. Typical examples include absolute signals over a significant axial length of the tube, absolute signals for which there has been litle or no corresponding differential signal, and signals which can reasonably be inferred as possible fretting or wear flaws based

upon experience (e.g., indications at the tube to baffle plate inspection in the preheaters sections of Westinghouse Model D steam generators). The simulated flaws shall be sufficiently tapered and smooth such that they produce little or no differential signal.

Each of the above additions would induce some activity relative to the inservice inspections program. The first item calls for either procedural changes to accommodate an expanded test matrix and acquisition of data from additional test parameters, with existing probes and upgraded instrumentation, as well as supporting analyses and evaluations, or at least some further analyses and evaluation to extract more information from normallyacquired data. The second item would not result in significant increased activity because utilities, for the most part, already acquire absolute coil data. The third item calls for an increase in analyses and evaluation activity. The fourth item would not affect inservice inspection, such as, but would require a one-time program per plant to define calibration standards for wear or fretting type flaws.

3.1.2 Need for Action

Eddy current testing (ECT) is a vital element of the inservice inspection of steam generator tubes. Properly executed and evaluated, ECT will detect various forms of tube degradation in time to initiate remedial action, thereby, halting or delaying processes which could lead to tube rupture.

The need for the proposed additions to inservice ECT technical specification is based on recognized capabilities with the current state of ECT technology. In the first place, laboratory experiments and field experience have demonstrated the superiority of multiple-frequency ECT and other techniques to eliminate unwanted signal interferences and descriminate among multiple defects. Because the history of degradation in operating steam generators has resulted in the potential for multiple deficits, cracking, or tube thinning on top of denting, and other sources of complex signals, these techniques have become essential in accurataly evaluating the condition of steam generator tubing. The use of ECT techniques or data evaluation techniques which are capable of eliminating tube support plate,

tube sheet, denting, or other similar unwanted signal interferences and discriminating among multiple defects should be required in all steam generator inservice inspection. In regard to the requirement that eddy current inspection shall include inspection in the absolute mode in addition to the differential mode to improve defect detection and interpretation capabilities the following case may be stated. A wall-thinning type flaw which is gradually tapered at its edges, as may be the case for fretting type wear defects, may not produce a detectable signal on the differential channels. Such a fretting type wear flaw will generally produce a signal on the absolute channels. In addition, tapered localized radial fretting or wear standard as opposed to the hole standards specified in Code may be necessary to correctly interpret the amplitude of the signal.

The tube which ruptured at Ginna in January 1982 as a result of a long fretting type wear defect had previously been inspected in April 1981, using both the differential and absolute modes. This tube exhibited no differential signal in April 1981, but did exhibit an absolute signal approximately 5" long, which was not recorded at that time. This April 1981 signal is interpretable as less than 20% indication using the calibration hole standards as specified in Section XI of the ASME code. However, this signal is interpretable as a slightly greater than 40% plugging limit for Ginna. An evaluation of the absolute signal in April 1981 using a fretting or wear standard may have resulted in the tube being plugged before the wear had proceeded sufficiently through the wall to cause the rupture.

3.1.3 Summary of Values and Impacts

<u>Values</u>

The expected value of the proposed changes to the ISI technical specifications would be to avert plant damage and/or increase plant availability. The elimination of signal interference has two benefits: a) there would be less chance of missing a degradation signal, otherwise masked by noise, and b) there would be less time devoted to sorting out the blind alleys of pure interference. Absolute coil testing would provide reliable resolution of additional degradation, such as wear or fretting-type flaws.

Impacts

The requirement to use techniques which would eliminate unwanted signal interference would have minimal impact on costs to industry. Multi-frequency testing is already performed at most Westinghouse and Combustion Engineering units. Furthermore, although only single-frequency testing is performed at Babcock & Wilcox units, there is an associated data reduction process (incorporating a known single-frequency interference signal) that unmasks the tube degradation information. Hence, the impact of eliminating unwanted signal interference is mainly to process the already-acquired data from Westinghouse and Combustion Engineering steam generator ECT. The basic capability to perform absolute coil testing is already inherent in the standard ECT equipment. However, there is an impact associated with: a) providing data channels, b) applying calibration standards, and c) evaluating the data.

3.2 APPROACH

3.2.1 Objective

The objective of this analysis is to determine the values and impacts related to implementation of the requirement to upgrade ECT procedures. The resulting analysis should provide sufficient qualitative and quantitative information to assess the overall merit of the requirement.

3.2.2 Scope

The scope of the evaluations on which the objective is based including the following elements: multi-frequency and multi-parameter testing, absolute versus differential testing (compatibility, calibration, training, technical specifications), and current usage and costs of multi-frequency and absolute coil testings.

The following specific evaluations are made to develop a basis for the analysis.

1. What is the cost increment to inservice inspections if these ECT additions become in effect? If all or a portion of these proposed

actions are already in practice by a substantial number of plants, then the cost increment will be that much less.

2. What is the radiation exposure increment if these ECT additions become in effect? For example, some of the additions require only a more comprehensive analysis of the existing data; this would entail no additional radiation exposure.

3. Are sufficient equipment and trained personnel available to implement these improved ECT techniques?

4. How do current practices among the utilities for ECT compare with the proposed additions to the technical specifications?

3.3 RESULTS OF ANALYSIS

3.3.1 Industry

Multi-frequency testing will minimally impact the cost associated with inservice inspection. Typically, a four-frequency test is performed with two channels for a strip recorder adds $20K. The total instrumentation package will cost $18K and a strip recorder adds $20K. The total instrumentation package will cost $80K (Reference 2). Assuming that the instrumentation becomes obsolete or otherwise unusable in 4 years, and assuming that there is a need for one such package per inservice inspection event, then the cost increment is $80K for an inservice inspection. However, a multi-frequency tester can reduce the number of tube pass-throughs by as much as a factor of 2. Instead of a separate sludge pass, the sludge can be monitored simultaneously with one of the frequencies (Reference 2). Assuming only a ten percent reduction in test time, one day of testing may be eliminated per steam generator for a savings of $15K (Reference 3). Hence, the net impact on testing costs would be about $35K per plant or $12-13K per steam generator. There would be no impact on radiation exposure.

Absolute coil testing differs from differential coil testing in that the former uses only one of the probe coils. The signal from the absolute coil is first calibrated with respect to an ideal (undegraded)

length of tubing. If the inspection test signals deviate from this calibration signal, they are subjected to further interpretation — comparison with calibration signals from standardized degraded tube specimens. This method is extremely sensitive, and can detect wear or fretting-type flaws. Absolute coil testing would not require additional instrumentation, only additional evaluation time. Assuming one additional day for evaluation, the cost impact would be about $15K per inspection for a single steam generator. There would be no impact on radiation exposure.

The above estimates have been made as conservative as possible. In fact, one knowledgeable source (Reference 4) estimates that the additional items would have virtually not impact. He estimates that practically all utilities already include both multi-frequency and absolute coil ECT evaluations as part of their present practices.

The value of including the proposed changes concerning ECT would increase the ability to interpret the informational content of the testing frequencies as well as to reduce the unexpected tube rupture due to wear or fretting flaws. Simply stated, the improved ECT method improves the quality of knowledge a utility has about the tubes which were inspected. In the following sections an evaluation of the values of the higher quality information is estimated. At this time, the data needs to determine a quantitative evaluation of the values are not available.

3.3.2 Change in Frequency

Historically, improved ECT would have reduced the probability of leakage and rupture events by prior plugging of damaged or degraded tubes. The frequency reduction achievable by improved ECT is very plant dependent. For plants that have good secondary water chemistry programs, and tube plugging rates less then the industry medium, the improvement will be very slight. For plants that have, or have previously had marginal secondary water chemistry programs, the improvement will be greater.

Considering ruptures, improved ECT (in particular the absolute coil method) could have detected 2 of the 4 events if the particular tubes had been selected for inspection. Also, improved ECT would have improved the information known about the tubes near those that ultimately ruptured.

Thus, assuming the future ruptures are from the same population of defects that has been seen to date, the frequency reduction factor for ECT detecting tubes that could cause SGTR is 0.5 times the probability that the tube will be selected for inspection. With the ISI sample size requirement, the probability of selection is from 3 to 100% with the typical upper bound presently about 40%. (With the proposed changes in ISI sample size up to 100% is indicated if a certain percentage of defective tubes or one defect is found in the initial sample size.) Further, it should be noted that historically, rupture events progressed over a number of fuel cycles and thus the ISI provides multiple opportunities to detect the failure mode. No credit is taken for the multiple opportunities, thus, we conservatively estimate that the frequency reduction factor is in the range of 0 to .2.

For leakage in the 0.1 to 0.3 gpm range, improved ECT is estimated to be able to detect more tubes with defects that could exceed 0.3 gpm before the end of the next cycle. Thus, improved ECT will reduce the number of forced outages. However, it is realized that some degradation modes progress so rapidly that they may not show any signal with ECT and also not all tubes will be inspected. Thus, the frequency reduction factor for leakage is assumed to be the same as for ruptures, 0 to 0.2.

The baseline frequency for forced outages due to leaks is .188/yr and for rupture is .015/yr. The estimated reduction in frequency is 0-0.038 and 0-0.002 for leakage and rupture, respectively.

Another factor affecting the frequency reduction factor is the combined impact of ISI and improved ECT. Improved ECT is more sensitive than the single frequency ECT and thus will detect degradation at an earlier point. If a plant presently has more undetected degraded tubes, the improved ECT will lead to a larger sample size. Thus for cycles immediately following implementation of ECT and ISI, many plants will have to have nearly 100% inspection. With 100% inspection the upper ranges of the frequency reduction factors would be as high as 0.5.

3.3.1.3 Radiological Dose

In summary, the occupational dose resulting from implementation of improved ECT represents no change form the dose presently being incurred.

An estimate of the avoided occupational dose was calculated or described above in Section 1 of this chapter. The occupational dose for a forced outage to repair leaks is estimated to be 150 man-rem and for repairing SGTR 350 man-rem.

The expected value of the avoided occupational exposure due to SGTR is 0 to 20 man-rem. The avoided occupational exposure due to forced shut down is 0 to 140 man-rem.

3.3.1.4 Cost

The economic benefits from avoided forced shutdowns due to leaks and SGRT are summarized in Table 3-1.

3.3.3 Public Risk

The change in risk to the public is calculated using the three accident consequences discussed in Section III.5. They are: core melt, major, and minor radiation releases. The annual risk to the public is given as:

Risk = (Cost or dose) x Probability of the Accident given a rupture) X (Annual rupture rate).

The change in risk is simply:

Change in Risk = (cost or dose) x (Probability of accident given rupture) x change in Annual rupture rate.

The values for the accidents are as follows: core melt cost is $\$3\times10^9$; the dose is 2.7×10^6 man-rem; and the probability, given a rupture is 1.5×10^{-5}; for a major radiation release the cost is $\$1\times10^7$; the dose is 2.3×10^3 man-rem, and the probability given a rupture is 8.1×10^{-6}. For a minor radiation release the cost is negligible, the dose is less than 2.3×10^3 man-rem, and the probability given a rupture is 4.0×10^{-2}. Thus the annual cost and dose reductions are $90 and 0.08 man-rem; $0.2 and 4×10^{-5} man-rem; and negligible cost and less than .18 man-rem for core melt, major and minor radiation releases, respectively. For the 24 years remaining

Table 3-1 Avoided Cost Associated with the ECT Requirement

Event	Change in Frequency (events/reactor/yr)	Present Worth (Event) Cost over SG Life) $10^6	Present Worth Benefit (Avoided Cost over SG Life) $10^6
Forced Outage Due to Leaks	0-0.038		
- 2 day		20.5	0-0.8
-14 day		146.7	0-5.6
Tube Rupture:	0-.002		
- 30 day		276.6	0-.60
- 60 day		602.5	0-1.3
- 90 day		1016.4	0-2.0

plant life the value are $1400 and 1.92 man-rem; $3 and 9×10^{-4} man-rem; and negligible and less than 4.42 man-rem.

3.3.4 Implementation Plan

Many plants are presently using improved ECT for ISI. No obstacles were identified to implementation of the new ECT STS requirements.

3.3.5 Alternatives

None were identified.

3.4 REFERENCES

1. T. Ippolito (NRC) to G.C. Lainas (NRC), "Forthcoming Meeting with Steam Generator Owner's Group – Proposal Generic Requirements," July 22, 1982.

2. Private communication with Mr. D. McGill, LMT, August 1982.

3. Private communication with Mr. P. Leonard, SAI, August 1982.

4. Private communication with Mr. H. Hausermann, Zetec, August 1982.

4.0 VALUE-IMPACT ANALYSIS FOR "UPPER INSPECTION PORT" REQUIREMENT

4.1 SUMMARY

This section states the proposed requirement and the bases for its selection and summarizes the results of the value-impact analyses.

4.1.1 Description

This analysis addresses the requirement proposed by NRC(1) that:

- For PWRs with U-tube steam generators that are licensed after January 1, 1983, upper inspection ports shall be installed before an operating license is issued. The ports shall be located so that visual inspection of upper support plates and inner row U-bend tubes can be performed.

- Upper inspection ports will not be required to be installed in operating plants by this generic requirement. The need for inspection ports in operating plants will be based on plant operating experience on a case-by-case basis.

The requirement for UIP's will involve new activity for all non-operating plants with U-bend steam generators. In particular, this activity includes the design and installation of these ports.

4.1.2 Need for Action

The need for the proposed requirement for UIP's is based on a desire for better inspection of the upper portions of U-type steam generator tubes. In the past, steam generators have generally been equipped with lower inspection ports (LIP). LIPs provide only a severely limited opportunity to inspect upper tube portions.

Also, some plants (e.g., North Anna 1 and 2, Farley 2, Salem 2 and Trojan) have, or will install, ports in the vicinity of the upper tube support

plate. The purpose of these is to evaluate and monitor the effects of denting, and to remove tube specimens for examination. It is noted that some removed tubes have exhibited degradation by mechanisms other than denting.

Installation of inspection ports in operating steam generators can result in extended outages and additional exposure of personnel to radiation. Therefore, for those plants not yet in operation, it is advantageous to install inspection ports prior to initial criticality. Several recently licensed plants have requirements, based on reviews specific to those plants, to install ports early in the life of the plant. Based on considerations of the impact of installing upper inspection ports in operating plants, the NRC staff plans to require installation in additional operating plants only as a result of case-by-casa reviews of plant specific operating experience.

4.1.3 Values and Impacts

The value/impact analysis for UIP's considers steam generators that are: (1) under fabrication, (2) in place and operational after 1982 and (3) currently operational. The impacts of installation of UIPs on steam generators under construction, in place but not operational after 1982, and currently operating are summarized in Table 4.1.

Table 4.1 Impacts for Installation of an UIP

	Costs $(1000s)	Occupational Dose (Man-Rem)
During fabrication	10	-
Before operation	300-450*	-
After operation	300-450*	100

* Assumes installation is done off-critical path and no purchase of replacement power is required

The operational value of installing UIP's is that these ports provide a visual inspection of the tubes in the region of the U-bends. This in turn, may reduce outages due to (otherwise) undetected tube degradation. The main value of installing UIP's is diagnostic rather than preventative. No specific benefit was identified that could be attributable directly to an UIP and thus no quantitative estimate of the benefit is presented.

4.2 APPROACH

4.2.1 Objective

The objective of this analysis is to determine the values and impacts related to implementation of the requirement. The results of the analysis should provide sufficient qualitative and quantitative information to assess the overall merit of the requirement.

4.2.2 Scope

The scope of the analysis on which the objective is based includes the specific evaluations identified below. These considerations are be compared with the associated values to the industry.

1. What are the considerations for installing UIP's on steam generators currently under fabrication? This group should involve the least changes and the minimum effort.

2. What are the considerations for installing UIP's on steam generators as assembled in plants which do not yet have an operating license? This group will undergo modifications to (previously) complete structures. However, since they are (radioactively) cold, they will not add to exposure levels.

3. What is the break-even point between installing before and after operations begin? In other words, how many UIP installations in non-operating plants are equivalent to a UIP installation in an operating plant.

4.3 RESULTS OF ANALYSIS

4.3.1 Industry

The installation of UIP involves materials and labor. The material cost will be essentially the same for installation during fabrication or on site after the steam generator has been installed but the labor cost will be different. The cost of installing a port on a steam generator during fabrication is assumed to break down as follows:

- total labor: 2 manweeks @ $60/hr = $4.8K
- total material: $5K

Thus, the total cost per port is on the order of $10K. On the other hand, in 1976 the total cost of installing a 3-inch port on an operational steam generator at Turkey Point was $200K-$300K (2). Based on a 7% annual inflation rate average for the 6-year period from 1976 to 1982, those costs today would be 50% higher; that is, the cost in 1982 would be $300-$450K. Hence, on a per port basis, the cost of installation on an operating steam generator is equivalent to from 30 to 45 port installations on steam generators under fabrication.

These equivalents apply to in-place steam generators in plants that are either operational or completed but not yet licensed. However, there is also the impact of radiation exposure for units in operating plants. While these units do not fall under the generic requirement, they are included on a case-by-case basis when plant operating experience so indicates. Based on the data presented in (3) and (4), an upper limit of 100 man-rem for occupational dose is calculated. This assumes 16 man-hours of cutting through the steam generator wall in the region of the flow resistance plate at 4 rems/hour, and 80 man-hours of work outside the steam generator at 0.4 rems/hr.

The expected value of UIP's to the industry would be in terms of: (a) averted plant damage, and (b) reduced cost for some repair tasks. In particular, UIP's would be useful in detecting tube degradation in the region of the top support plate, such as flow slot hourglassing. UIP's would also facilitate tube removal for nearby tubes; this would simplify some repair

tasks, tending to reduce associated costs. Moreover, averted plant damage should ultimately increase plant availability.

While in principle there is value to providing UIP's, there is also the question of the relative value. Flow slot hourglassing is currently detectable by, e.g., the failure of ECT probes to transverse the affected region of tubing, assuming that an affected tube is selected for ECT. The reduced task of tube removal would only apply to those tubes in the immediate vicinity of the UIP's.

The chief value of UIP's appears to be diagnostic rather than preventative for tube degradation. The visual information from UIP's could be correlated with, e.g., ECT signals which would improve the resolution of signals with specific tube degradation mechanisms.

Installation of UIP's in an already installed steam generator provides an opportunity for introduction of foreign objects into the steam generator. Thus an inspection of the top of the tube sheet and QA procedures, both described above in Section 1 of this chapter, are assumed.

4.3.2 Public Risk

No reduction of tube rupture is estimated and no change in public risk is identified.

4.3.3 Alternatives

One alternative might be to require upper inspection ports in plants issued construction permits after 1982. This would give the utilities time to implement the requirement prior to installation and thus reduce the costs considerably. Another alternative might be to require the upper inspection port to be installed on new steam generator designs during fabrication.

4.4 REFERENCES

1. T. Ippolito (NRC) to G. C. Lainas (NRC) Memorandum, "Forthcoming Meeting with Steam Generator Owners Group - Proposed Steam Generator Generic Requirements", July 22, 1982.

2. Private communications with Mr. R. Acosta and Mr. R. Li of Florida Power and Light, August 1982.

3. G. R. Hoenes, M. A. Mueller, and W. D. McCormack, "Radiological Assessment of Steam Generator Removal and Replacement: Update and Revision", NUREG/CR-1595, U. S. Regulatory Commission, Washington, D.C., December 1980.

4. C. Y. Cheng, "Steam Generator Tube Experience", NUREG-0886, U. S. Nuclear Regulatory Commission, Washington, D.C., February 1982.

5.0 VALUE-IMPACT ANALYSIS FOR "SECONDARY WATER CHEMISTRY PROGRAM" REQUIREMENT

5.1 SUMMARY

This section states the proposed requirement and the basis for its selection and summarizes the result of the value-impact analysis.

5.1.1 Description

This analysis addresses the requirement proposed by NRC (1) that all licensees incorporate a requirement for a secondary water chemistry program to minimize steam generator tube degradation. The requirement for the program would be specified as a condition to the license which will stipulate that the program itself will be defined in specific plant procedures.

The NRC staff will review the plant-specific secondary water chemistry program for compliance with the following criteria: the specific plant program should address measures taken to minimize steam generator corrosion, including materials selection, chemistry limits and control methods. In addition, the specific plant procedures should include progressively more stringent corrective actions for out of specification water chemistry conditions. These corrective actions must include power reductions and shutdowns, as appropriate, when excessively corrosive conditions exist. Specific functional individuals must be identified as having the responsibility/authority to interpret plant water chemistry information and initiate appropriate plant actions to adjust chemistry, as necessary.

Although the requirement for a program which includes the above named elements shall be included in the license, the specific plant procedures implementing the program will not be specifically included in the license. To provide review criteria for determining whether plant-specific secondary water chemistry is acceptable, the NRC staff is currently revising the secondary water chemistry guidelines which are in SRP 5.4.2.1. The revision to these guidelines will incorporate the

September 1981 "PWR Secondary Water Chemistry Guidelines" as a review basis. These guidelines were prepared by the Steam Generator Owners Group Water Chemistry Guidelines Committee and represent an industry consensus opinion for state-of-the-art secondary water chemistry control.

5.1.2 Need for Action

The corrosion of steam generator materials may result in primary to secondary leakage if preventative measures or repairs are not undertaken on time. Such leakage may allow the release of radioactivity to the environment. The necessary repairs and preventative measures have resulted in significant occupational radiation exposures. The accomplishment of improved secondary water chemistry has been recognized by the industry in general and by the NRC staff as an important factor in reducing steam generator materials corrosion. Therefore, to provide assurance that all PWR licensees will uniformly and consistently implement proper monitoring and control of secondary water chemistry, thus reducing the need for repair and preventative activities resulting in occupational radiation exposures and reducing the potential for radioactive releases to the environment, the requirement for such a program shall be included in the license.

5.1.3 Summary of Values and Impacts

The cost benefits of the proposed requirement are found to far outweigh the cost impacts. The beneficial value of avoided costs of steam generator maintenance, repair and/or replacement, plus the avoided cost of replacement power, far exceed the cost impact of the additional labor and/or equipment associated with the SWCP. The cost impacts per unit are around $1.3 million, but the cost benefits range from $40 to $240 million, primarily due to avoiding SG replacement and derating for those units affected.

Due to decreased SG repair and inspection required under the SWCP, the ORE will be decreased. The incremental radiation dose received during the more extensive testing of the secondary water is determined to be negligible. The annual avoided dose ranges from 40 to 312 man-rem per unit, depending on the existing condition of that unit, and whether or not the steam generator must be replaced.

With the SWCP requirement, the probability of SGTR will be reduced. However, the risk to the public is on the order of 10^{-7} for core melt and major radiation releases, and 10^{-3} for minor releases. The costs and dose associated with SWC-related SGTR public consequences are negligible.

A summary of the 24 year impacts and values of this SWCP requirement for various PWR cases is given in Table 5-0. Overall, the SWCP appears exceptionally cost-beneficial and fairly important in occupational exposure reduction. The SWCP requirement has a definite value in relation to its impacts.

5.2 APPROACH

5.2.1 Objective

The objective of this evaluation is to determine the values and impacts related to implementation of an NRC requirement for incorporation of a requirement for a secondary water chemistry program (SWCP) as a license condition for PWR owners. The value/impact analysis addressed here is concerned with three areas: cost, dose, and probability change. That is, the analysis will investigate quantitative and qualitative changes in the above three areas associated with implementation of a SWCP.

5.2.2 Scope

The listing below provides an overview of the impacts and values to be assessed related to an SWCP. These items provide the basis for assessing the cost factors, change in SGTR probability, and dose factors. Items/factors investigated included:

- preparation of procedures and management system.
- training of operational and management personnel.
- costs of equipment, including installation, maintenance and operating labor.
- personnel exposure during SWC testing.
- steam generator SWC-related plant outages/availability/replacement.

Table 5-0 Summary of Impacts and Values Over 24 Year Life For a PWR for the Secondary Water Chemistry Requirement

Unit	Impacts		Values			
	Occupational Exposure (man-rem)	Present Worth Costs ($M)	Avoided Exposures (man-rem) Occupational	Avoided Exposures (man-rem) Public	Avoided Present Worth Costs ($M) Industry	Avoided Present Worth Costs ($M) Public
Industry Average	0	1.3	1400	2.	40 - 49	10^{-3}
Severe Case	0	1.3	7500	20	192 - 240	.16
Medium Case	0	1.3	1000	2	39 - 44	10^{-3}

- decrease in SG degradation and tube rupture.
- Public risk reduction.

The approach used to develop qualitative and quantitative values for these factors included a telephone survey to a number of PWR owners. Seventeen PWR units were contacted, with two having CE-supplied steam generators and the rest Westinghouse generators.

5.3 RESULTS OF ANALYSIS

The results of the analysis are presented below in terms of the values and impacts on both the nuclear industry and the public. The value-impact of the proposed implementation plan is presented and, finally, alternatives to the proposed requirement are discussed.

Table 5-1 presents a summary of the information received from the telephone survey of the PWR owners. These data were utilized in formulating the results.

The values and impacts associated with the nuclear industry are examined below as associated with the three study areas:

- o probability changes of outages, ruptures, plugging, and risk,
- o costs, and
- o radiation exposures.

5.3.1 Probability Changes

The approach taken to determining the V-I's associated with each of the above areas was to examine the expected changes due to the SWCP requirement to both individual units and to the industry overall. For this particular proposed requirement, existing plants were grouped into three groups:

- o "severe" - those units which have experienced significant SWC-related tube degradation

Table 5-1. Summary of Pertinent Information Received During Survey of PWR Owners

1. SGOG, "PWR Secondary Water Chemistry Guidelines," September 1981, are being "followed" by 24 percent of the units surveyed (4 of 17).

2. A combination of SGOG and manufacturers recommended SWCP is being followed by about 12 percent of the units surveyed (2 of 17).

3. The manufacturer's recommended SWCP is being followed by about 64 percent of the units surveyed (11 of 17).

4. Nearly all units surveyed which were not using the SGOG SWCP indicated movement in the direction of the SGOG guidelines.

5. At one two-unit site, they recently added two technicians and a chemist to the staff to allow implementation of the SGOG SWCP.

6. The majority of the personnel contacted indicated an impact of about one person full time to administer a formal NRC required SWCP.

7. Undocumented information suggests that all C-E and B&W Plants have the necessary equipment to implement the SGOG SWCP. Some Westinghouse units will need to add equipment; particularly the older units.

8. The SWCP for all reactors was similar. The following is an example of this program. The program is carefully related to protecting the condenser valves.

   a. Via SG Blowdown (Daily Sample)
   Monitor for: pH, cation conductivity, Cl, F, silica, gross activity, hydrazine

   b. Via SG Blowdown (Continuous Reading in Control Room
   Cation conductivity, specific conductivity, pH, gross activity

   c. SG Water (Weekly)
   Iron, copper, total solids

   d. Condenser Condensate at Discharge of Condenser Pump and All Four Hotwells (Discharge Pump Suction)
   Daily: pH, dissolved oxygen, ammonia
   Continuous (control room readout): sodium, cation conductivity, dissolved oxygen

   e. Waste Steam Plus Condensate (Feed Water)
   Daily: pH, conductivity
   Continuous (control room readout): pH, conductivity

   f. Condenser Air In Leakage
   Three times per day

9. Manufacturer's recommendations vary and some units monitor for free hydroxide and suspended solids also.

10. The SGOG SWCP is more demanding: it requires more sample points, analyses and labor requirements (verbal comment from member surveyed - Table II-3).

- "clean" – those units with little SWC-related tube degradation
- "medium" – the rest of the units; between "good" and "bad".

The grouping of surveyed units according to these categories is described below.

The probability changes (frequency of occurrence) to be determined are associated with avoidance of:

- steam generator tube rupture,
- forced outages due to leaks,
- tube plugging and associated testing, and
- plant derating and/or SG replacement.

The determination of the above values is based on establishing an example "severe", "clean" and "medium" plant with respect to SWCP corrosion-related tube degradation history. From References 2, 3, and 4 the data was extracted to construct Table 5-2 which establishes the three example plants. The degradation modes expected to be affected by a SWCP include wastage, cracking, IGA, pitting, denting and erosion/corrosion; these modes determined the event frequencies used for the data references.

Thus, the data differences between the "severe" and "clean" example plants will be used to represent the potential of the SWCP to effect changes. The same is true for the differences between the "medium" and "clean" plants. It is assumed that the implementation of this requirement would achieve 75% of the potential for improvement for "severe" plants, and 50% of the potential for "medium" plants. The larger expected percentage improvement for the "severe" plants is due simply to the greater potential for improvement.

From the historical data in References 2, 3, and 4, the telephone survey, and the statistical analysis section of this report (III.2), approximately one-sixth (1/6) of the operating units are assumed "severe", one-half (1/2) "medium" and one-third (1/3) "clean". Units were grouped by their history of plugged tubes. "Severe" plants had multiple hundred tubes plugged, "medium" units had around one hundred, and "clean" units generally had in the low tens of tubes plugged, all after 6-8 years of service.

Table 5-2. Three Example Unit Data

	Reactor Years (Excluding 1st 2 yrs)	Forced Outages/Yr(1)	Tubes Plugged Per Yr (%/yr)
1. "Clean" Units:			
#1	6	0	0 (0)
#2	5	0	2.5 (0)
#3	4	0	0 (0)
#4	3	0	0 (0)
"Clean" Example:	6	0.035*	1 (0)
2. "Severe" Units:			
#1	6	.33	258 (2.5)
#2	3	.66	206 (2.1)
#3	7	0	239 (2.3)
#4	6	.5	250 (2.4)
"Severe" Example:	6	.37	250 (2.4)
3. "Medium" Example:	6	.082	70 (0.7)

*Note: Leakage event rate chosen higher than plants' data to account for conservative range.

(1.) Forced outage rate obtained by using one-half 0.1-0.3 gpm leakage rate plus 0.3 to TR leakage rate for chemistry-related degradation modes.

Table 5-3. Secondary Water Chemistry Related Event Frequencies (Per Reactor-Year) Per Unit

	Forced Outages*	SGTR	Tubes Plugged Percentage
1. Existing Industry-Wide Average Unit	0.115	0.008	0.7
2. "Clean" Example Unit	0.035	0.003	0
3. "Medium" Example Unit	0.082	0.007	0.7
- Potential Avoidance ("Medium" minus "Clean")	0.047	0.004	0.7
- Expected Avoidance	0.024	0.002	0.4
4. "Severe" Example Unit	0.37	0.033	2.4
- Potential Avoidance ("Severe" minus "Clean")	0.335	0.030	2.4
- Expected Avoidance	0.25	0.022	1.8
5. Industry-Wide Average Unit Expected Avoidance	0.053	0.003	0.5

*Based on all PWR data leakage frequencies using one-half of 0.1 - 0.3 gpm leakage plus .3-(TR) gpm leakage frequency for the SWC-related degradation modes.

Table 5-3 summarizes the data differences and presents the avoided frequencies of the three events: forced outages, tube ruptures, and tube plugging. These avoided frequencies are used in the sections below to quantify the costs and radiation doses avoided.

5.3.2 Industry Costs and Radiation Doses

The quantified cost and radiation and dose impacts and values are presented below. The previously developed "avoided" event frequencies are used to quantify specific costs and doses associated with the SWCP requirement.

Economic Costs and Benefits

According to the survey results presented in Table 5-1, the industry appears to feel that one person full-time will be required for administering the program at each unit.

The need to add one full-time staff member to administer the SWCP seems rather high. One can argue that if the industry feels that this is the level of additional effort needed to implement the SWCP, then they have not been adequately or efficiently applying their existing programs. It is estimated that the impact is probably on the order of four to six person-months additional staff labor per unit, primarily to administer a formal NRC required SWCP. Thus, it is estimated that the larger-cost impact to the industry caused by a SWCP requirement as a license condition would be about five person months for administration ($20K/yr per PWR unit). The present worth cost of this labor over 24 years is $0.3 million.

It is estimated that the units presently following the manufacturer's SWCP will need to expend approximately $1 million on equipment to up-grade to the SGOG SWCP. This equipment is composed of the sensors, continuous recorders and analytical data machines needed to provide the multitudinous, continuous inputs required. This equipment is expected to be needed in approximately two-thirds of the existing plants, primarily those with Westinghouse SG systems.

The economic benefits of the SWCP requirements are associated with avoiding future costs. The costs which can be avoided are associated with tube plugging, forced outages due to leaks, tube ruptures, and SG replacement and/or unit power derating. The cost benefits are calculated by multiplying the avoided event frequency by the present worth of each event's cost over SG expected life, as described earlier in Section III.I of this report. Table 5-4 presents a summary of these avoided cost-benefit calculations for the average plant. Tables 5-5 and 5-6 present the avoided cost data for the "medium" and "severe" condition plant, respectively. The "clean" plants will not benefit since these units are already as good as they can be.

Note that the benefit of avoiding SG replacement is an order of magnitude greater than avoiding the total of plugging, outages and ruptures. Also note that as expected, the greatest avoided cost benefit is experienced by the "severe" units.

Thus, comparing the present worth of costs ($1.3 million) with the benefits of avoided costs ($2 - 64 million, plus $37-176 million for SG derating and/or replacement), it is apparent that the economic cost-benefit analysis is strongly in favor of the SWCP requirement.

Radiation Exposures

The radiation exposure due to performing a SWCP is negligibly different than present SWC testing doses. However, the avoided doses due to reduced/avoided exposure during SG maintenance, repair and replacement are significant.

The avoided exposures are determined by multiplying the yearly avoided event frequency by the dose expected for performing that event. Again, different avoided doses will be experienced by the "severe", and "medium" units due to different event frequencies. Table 5-7 presents the avoided doses over a 24 year life for the "severe", "medium", and the industry-average unit. Again, the "clean" unit experiences no benefit.

Table 5-4. Industry-Wide Average per Unit Associated with the SWCP Requirement

Event	Avoided Frequency from Table 5-3 (events/reactor/yr)	Present Worth Event Cost over SG Life (10^6)	Present Worth Benefit (Avoided Cost) (10^6)
Tube Plugging	0.71	1.7	1.3
Forced Outage Due to Leaks	0.053		
- 2 day		20	1.1
- 14 day		146	7.7
Tube Rupture:	0.003		
- 30 day		276	0.8
- 60 day		662	2.0
- 90 day		1,016	3.1
SG Derating (at year 16 through 30 at 0.7% plugging)		37.5	37.5

Summary

o Present Worth Benefit (Avoided Cost) Range for Plugging, Leaks, and Ruptures	$3.2 - 12 million
o Present Worth Benefit (Avoided Cost) of Expected 16th through 30th year SG derating due to plugging	$37.5 million

Table 5-5. "Medium" Condition Plant per Unit Benefit of Avoided Costs Associated with the SWCP Requirement

Event	Avoided Frequency from Table 5-3 (events/reactor/yr)	Present Worth Event Cost over SG Life (10^6)	Present Worth Benefit (Avoided Cost) (10^6)
Tube Plugging	0.57	1.7	1.0
Forced Outage Due to Leaks	0.024		
- 2 day		20	0.5
- 14 day		146	3.5
Tube Rupture:	0.002		
- 30 day		276	0.6
- 60 day		662	1.3
- 90 day		1,016	2.0
SG Derating (at year 16 through 30 at 0.7% plugging)		37.5	37.5

Summary

o Present Worth Benefit (Avoided Cost) Range for Plugging, Leaks, and Ruptures	$2.1 - 6.5 million
o Present Worth Benefit (Avoided Cost) of Expected 16th Through 30th Year SG Derating Due to Plugging.	$37.5 million

Table 5-6. "Severe" Condition Plant per Unit Benefit of Avoided Costs Associated with the SWCP Requirement

Event	Avoid Frequency from Table 5-3 (events/reactor/yr)	Present Worth Event Cost over SG Life (10^6)	Present Worth Benefit (Avoided Cost) (10^6)
Tube Plugging	0.75	5.9	4.4
Forced Outage Due to Leaks	0.25		
- 2 day		20	5.1
- 14 day		146	36.6
Tube Rupture:	0.022		
- 30 day		276	6.1
- 60 day		662	14.6
- 90 day		1,016	22.3
SG Replacement (at year 18 with 2.4% plugging*)		176	176

Summary

o Present Worth Benefit (Avoided Cost) Range for Plugging, Leaks, and Ruptures	$15.6 - 63.5 million
o Present Worth Benefit (Avoided Cost) of Expected 18th Year SG Replacement	$176 million

*Note: A "severe" plant would theoretically experience two separate SG replacements. Since the first SG replacement (at year 9) is unavoidable, the second replacement and the derating is the avoided cost used here.

Table 5-7. Radiation Doses Avoided for Different Unit Groups with the SWCP Requirement

	Avoided Frequency From Table 5-3 (Events/Rx-yr)	Radiation Dose/Event (Man-Rem)		24 Year Avoided Dose (Man-Rem)
"Severe" Units:				
o Plugging[1]	180	1		4320
o SGTR Repair	.022	350		185
o SG Replacement	1*	2100		2100
o SG Leakage Repair	.25	150		900
			Total:	7505
"Medium" Unit				
o Plugging[2]	40	1		960
o SGTR Repair	.002	350		17
o SG Replacement	0	2100		0
o SG Leakage Repair	.024	150		86
			Total:	1063
Industry Average Unit				
o Plugging[3]	50	1		1200
o SGTR Repair	.003	350		7
o SG Replacement	0	2100		700
o SG Leakage Repair	.053	150		191
			Total:	1416

1. .8% plugging rate is 180 plugs.
2. 0.4% " " " 40 plugs.
3. 0.5% " " " 50 plugs.

* See note at bottom of Table 5-6.

The avoided doses are seen to be primarily due to avoided tube plugging. For the average unit the avoided annual dose would be significant in comparison to the total occupational doses presently received.

5.3.3 Public Risk

The risk to the public is calculated using the three accident consequences outlined in Section III.5: core melt, major radiation release, and minor radiation release. Given a tube rupture, the probabilities, cost of clean-up and radiation doses have been determined for the three consequences above and are presented in Section III.5.

The public risk reduction attributed to these consequences due to SWC-related problems is obtained by multiplying the avoided frequency of tube rupture caused by SWC by the rupture-to-consequence probability. Thus, the risk reduction, avoided clean-up cost, and avoided radiation dosage can be calculated as given in Table 5-8.

Note that the existing probabilities of core melt are low at 10^{-7}, major radiation release probability is also on the order of 10^{-7}, and a moderate probability order of 10^{-3} for the minor release consequence. The reductions in consequence probabilities are correspondingly low, with trivial cost avoidance and negligible dose avoidance due to low event probabilities (see Table 5-8).

Thus, the risk reduction to the public was negligible, as were the public costs and doses avoided.

5.3.4 Implementation Plan

Implementation of the SWCP requirement as a condition of the license can be performed with little impact in most cases. New plants should feel no schedule impact; particularly since most new plants appear to be considering the SGOG SWCP. What the existing plants require is a set of procedures identifying the person responsible for data interpretation, the sequence and timing of events to correct SWC deficiencies, and the reporting/audit system to monitor the program. These procedures and equipment could be prepared during operations and implemented during a

Table 5-8. Public Risk Reduction and Avoided Public Costs and Doses Due to SWCP Requirement (per Reactor Year)

	Core Melt	Major Radiation Release	Minor Radiation Release
Existing Consequence Probability:	(10^{-7})	(10^{-6})	(10^{-4})
o "Severe"	4.9	27	13
o "Medium"	1.1	5.7	2.9
o "Clean"	0.4	2.5	1.3
o Industry Average	1.2	6.6	3.3
Consequence Probability Reduction:	(10^{-8})	(10^{-8})	(10^{-4})
o "Severe"	33	18	8.8
o "Medium"	3.0	1.6	0.8
o Industry Average	4.5	2.4	1.2
Avoided Consequence Costs:	($)	($)	($)
o "Severe"	1000	1.80	8.80
o "Medium"	90	.16	.80
o Industry Average	135	.24	1.20
Avoided Consequence Doses:	(Man-Rem)	(Man-Rem)	(Man-Rem)
o "Severe"	.9	Neg.	Neg.
o "Medium"	.08	Neg.	Neg.
o Industry Average	.12	Neg.	Neg.

* See note at bottom of Table 5-6.

planned outage or even during operations. However, a realistic time schedule for compliance must be established for those plants requiring equipment purchase and installation.

5.3.5 Alternatives

There is no technically-acceptable alternative to the SWCP. The requirement of a SWCP as a license condition has only the alternative of no action, i.e., let the utilities continue the SWCP in an informal manner. The condenser ISI requirement supports the SWCP requirement, but cannot take its place.

5.4 REFERENCES

1. T.A. Ippolito (NRC) to G.A. Lainas; Memorandum; "Forthcoming Meeting with Steam Generator Owner's Group - Proposed Generic Requirements", July 22, 1982.

2. U.S. Nuclear Regulatory Commission, "Standard Technical Specifications for Babcock and Wilcox Pressurized Water Reactors", NUREG-0103, Revision 4, Fall 1980.

3. U.S. Nuclear Regulatory Commission, "Standard Technical Specifications for Combustion Engineering Pressurized Water Reactors", NUREG-0212, Revision 2, Fall 1980.

4. U.S. Nuclear Regulatory Commission, "Standard Technical Specifications for Westinghouse Pressurized Water Reactors", NUREG-0452, Revisions 3, September 1980.