UNITED STATES
NUCLEAR REGULATORY COMMISSION
OFFICE OF NUCLEAR MATERIAL SAFETY AND SAFEGUARDS
WASHINGTON, D.C. 20555

September 4, 1990

NRC INFORMATION NOTICE NO. 90-56: INADVERTENT SHIPMENT OF A RADIOACTIVE SOURCE IN A CONTAINER THOUGHT TO BE EMPTY

Addressees:

All U.S. Nuclear Regulatory Commission (NRC) licensees.

Purpose:

This notice is provided to inform licensees of a recent transportation incident that could have resulted in significant radiation exposures to workers or members of the public. This notice also serves to remind licensees of their responsibilities when importing radioactive materials or when shipping packages.

It is expected that licensees will review this information for applicability to their licensed activities and consider actions, as appropriate, to avoid problems when importing radioactive materials or shipping packages. However, suggestions contained in this notice do not constitute any new requirements, and no written response is required.

Description of Circumstances:

On March 8, 1990, Amersham Corporation (Amersham), Burlington, Massachusetts, an NRC licensee authorized to manufacture and distribute iridium-192 and cobalt-60 sealed sources for use in industrial radiography equipment, received a Model 500-SU source changer from its Korean product distributor. In accordance with shipping documents, Amersham expected the source changer to be empty. However, as an Amersham technician approached the source changer, his audible alarming dosimeter indicated increased radiation levels. Radiation dose rates measured as high as 10 rem per hour at approximately 18 inches and 150 rem per hour on contact. Amersham later discovered that the source changer contained a 2.4-curie, iridium-192 source capsule in an unshielded portion of the changer. Because the source changer was transported cross-country by domestic motor carrier, the potential existed for significant radiation exposure to a variety of individuals. A more detailed description of the incident is enclosed in Attachment 1.

Discussion:

NRC shares regulatory responsibility with the U.S. Department of Transportation (DOT) for transportation of radioactive materials. NRC regulations for transportation of radioactive materials are codified in 10 CFR Part 71, "Packaging and Transportation of Radioactive Material." NRC regulations in 10 CFR 71.0(b) state, in part, "The packaging and transport of licensed material are also subject ... to the regulations of other agencies (e.g., the U.S. Department of Transportation and the U.S. Postal Service) having jurisdiction

9008280232 PDR IE Notice 90-056 900904 IDR IIC

over means of transport." DOT's hazardous materials regulations are codified in 49 CFR Parts 100-180. A provision of NRC regulations in 10 CFR 71.5(a) effectively requires that all licensees (who transport or deliver to a carrier for transport), follow DOT's hazardous materials regulations in Title 49.

NRC regulations in 10 CFR 110.27(a)(3), "Export and Import of Nuclear Equipment and Materials," authorizes any person to import byproduct material if that person is authorized to possess the materials under a specific license that has been issued by NRC or an Agreement State. DOT regulations for the import and export of radioactive materials are specified in 49 CFR 171.12, "Import and export shipments." 49 CFR 171.12(a) requires, in part, that each person importing a hazardous material into the United States shall provide the shipper (foreign exporter) and freight forwarder complete information as to the requirements of the DOT hazardous materials regulations that apply to the shipment within the United States.

10 CFR 20.205 specifies package receipt and opening requirements for NRC licensees. Pursuant to this section, licensees are required to report to NRC when receiving certain packages exhibiting excessive contamination or radiation levels. In addition, pursuant to 10 CFR 71.95, NRC licensees are required to report "... any instance in which there is a significant reduction in the effectiveness of any NRC authorized packaging during use." DOT regulations in 49 CFR 171.15 and 171.16 require carriers to immediately report to DOT any incidents, during transport of hazardous materials, when there are fatalities, injuries involving hospitalization, $50,000 property damage, and, in the case of radioactive materials, "... fire, breakage, spillage, or suspected radioactive contamination...."

Amersham provided an operations manual, with every Model 500-SU source changer, that included instructions to users for returning empty source changers. These instructions described procedures for preparing an empty source changer containing depleted uranium (DU) shielding as an "excepted" package, provided the surface radiation level was below 0.5 mR/hr. However, NRC determined that the surface radiation levels on the source changer involved in this incident exceeded the acceptable level. The Amersham operation manual did not explain how to prepare the package (empty source changer), when the radiation level exceeds 0.5 mR/hr.

The Model 500-SU operations manual also informed the user to "... assure that there is no source in the container." However, the manual did not list specific procedures to make this determination. Ordinarily, a visual examination would verify the presence (or absence) of a source assembly, as the connector end of the assembly would be evident. However, a visual examination would not have revealed the source in this incident because the source was cut from the source assembly. A surface radiation survey could also be used to detect a source in a changer. However, NRC determined that even for a changer containing a 3-curie source, the surface readings would be indistinguishable from readings obtained from the DU shield of an empty source changer. Amersham estimated that the minimum source activity detectable through the DU shielding of the Model 500-SU is 4 curies.

The incident described in Attachment 1 could have resulted in significant radiation exposures to workers or members of the public. The incident and the forementioned discussion demonstrate the importance of doing the following:

1. Licensees who may be importing radioactive materials are advised to review DOT's regulations in this area and are reminded of their responsibility to inform foreign exporters of proper packaging, labeling, and other requirements concerning transport of radioactive materials in the United States.

2. Licensees shipping packages that incorporate DU shields are reminded that complete and accurate radiation surveys must be conducted to verify proper shipping requirements, since DU containers may exceed 0.5 mR/hr.

3. Licensees returning shielded packages that do not contain radioactive material, especially those packages that incorporate DU shields, are cautioned that complete and accurate radiation surveys must be performed, and that a physical probe of the package may be necessary to verify that the package does not contain radioactive materials.

4. Manufacturers who receive returned packages should ensure that they provide complete instructions to customers for properly verifying that packages are empty as well as for meeting restrictions on surface radiation levels. Licensees that return such packages should ensure that these procedures are strictly followed.

5. Licensee are reminded of the need to evaluate incidents for their actual and potential safety consequences. Responsible individuals should review even minor incidents for unexpected consequences and to determine if there are any requirements for reporting the incident to NRC or DOT. Even if there does not appear to be an applicable reporting requirement, or if there is some uncertainty about reporting requirements, licensees are encouraged to discuss events with the appropriate regulatory agency. Transportation incidents should be reported to DOT's National Response Center at (800) 424-8802.

No written response is required by this information notice. If you have any questions about this matter, please contact the appropriate regional office or this office. Questions concerning DOT requirements should be directed to Michael Wangler, Chief, Radioactive Material Branch, Office of Hazardous Materials Transportation, DOT (202) 366-4545.

Richard E. Cunningham

Richard E. Cunningham, Director
Division of Industrial and
Medical Nuclear Safety
Office of Nuclear Material Safety
and Safeguards

Technical Contact: J. Bruce Carrico, NMSS
(301) 492-0634

Attachments:
1. Description of Incident
2. Examples of a Source Assembly and
   a Model 500-SU Source Changer
3. List of Recently Issued NRC Information Notices

DESCRIPTION OF INCIDENT

On March 8, 1990, Amersham Corporation (Amersham), Burlington, Massachusetts, a U.S. Nuclear Regulatory Commission (NRC) licensee authorized to manufacture and distribute iridium-192 and cobalt-60 sealed sources for use in industrial radiography equipment, received a shipment of 14 source changers from its Seoul, Korea product distributor, NDI Corporation (NDI). The source changers (shielded devices routinely used by manufacturers to ship new, high-activity sources to radiography licensees, and by the radiography licensees to return "depleted," lower-activity sources) were expected to be empty by Amersham and were, according to shipping documentation.

When the source changers arrived at Amersham, the wooden shipping crate had broken apart, leaving the devices scattered over the floor of the truck trailer. The truck driver proceeded to remove pieces of the broken crate and to rearrange the changers to ease their removal. As an Amersham technician approached the trailer, his audible alarming dosimeter indicated increased radiation levels in the area. Using a survey instrument, he measured radiation dose rates of between 60 and 100 millirems per hour at an estimated 15 feet from the back of the trailer. The technician advised the truck driver to stay out of the area and then informed Amersham's Radiation Safety Officer (RSO) of the situation.

The RSO was able to identify and isolate the source changer that was emitting the radiation. Performing surveys with a survey probe at the end of a long extension, the RSO measured radiation dose rates as high as 10 rems per hour at approximately 18 inches and 150 rems per hour at contact with an unshielded portion of the source changer. Amersham's employees later discovered that the source changer contained a small sealed source capsule in the unshielded portion of the housing. Amersham employees were able to safely remove the capsule and secure it in a hot cell for evaluation and analysis. Amersham's RSO then advised NRC's Region I office of the incident.

Two inspectors were dispatched from Region I to perform a preliminary review of the event and to ensure that the materials and documents were preserved for later investigation. The shipment of source changers originated in Seoul, Korea. It was transported to Los Angeles by ship, and subsequently carried across the United States by a domestic motor carrier. Therefore, the potential existed for significant radiation exposure to a variety of individuals, depending on proximity to the source and duration of exposure. Consequently, NRC dispatched an Incident Investigation Team (IIT) to perform a comprehensive review of the event and to determine the potential for exposure to those who handled the source changer and to members of the general public who came in close proximity to it.

The source had no manufacturer's identification markings or serial number. Amersham was able to determine that the capsule was a 2.4-curie, iridium-192 Model 8 sealed source manufactured by Industrial Nuclear Company (INC) of San Leandro, California. Through communications with INC; INC's Korean product distributor, Boo Kyung Sa Ltd.; and the Korean authorities, the IIT identified

Korea Industrial Testing Company (KIT) Seoul, Korea as the last user of the source. The source had an initial activity of 56 curies on its date of manufacture, April 13, 1989. Amersham's Korean product distributor, NDI, also identified KIT as the last user of the Amersham Model 500-SU source changer, in which the capsule was discovered.

Most radiographic operations involve projecting a radioactive source out of its shielded position within a radiography device into a pre-positioned tube. In order to facilitate handling, the source capsules are attached to one end of a short piece of cable with a connector attached to the other end. This piece of equipment is described as a "source assembly." An example of a typical source assembly is shown in Attachment 2. A drawing of Amersham's Model 500-SU source changer is also shown.

Apparently, Korean users were using source changers as storage devices for decaying depleted sources, before disposal. To store a source in a Model 500-SU source changer, the source capsule would be cut from the assembly, dropped into the source tube, and would fall to the shielded position. After the source decayed sufficiently, the source changer would be used to move the source to a disposal area. The IIT was able to verify that KIT used the source changer involved in this incident in such a manner, and that KIT failed to remove the source before returning the source changer. Amersham reported that it had received source changers containing severed source capsules (the source remained in the shielded area) on two previous occasions, and that from 1985 to 1989, at least nine source changers were returned from Korea with contaminated source tubes.

Through document review and personnel interviews, the IIT was able to determine how the source changer was returned to Amersham. In January 1990, KIT returned the Amersham source changer to NDI. Neither NDI nor KIT surveyed the source changer, because both believed it to be empty; however, NDI did survey the storage area where it stored the source changer and found only low radiation levels. The KIT source changer and 13 others were then shipped to a packing company in Seoul and placed in a wooden transportation crate. The crate was trucked to Pusan, Korea and delivered to a container freight station, where it was loaded into a transoceanic shipping container and then onto a South Korean container cargo ship. Except for identifying its destination and the shipper (NDI), the crate was unlabeled. A bill of lading identified the crate as "1 BOX RADIOISOTOPES," and a rider to the bill of lading described the freight as "1 Box, 371 KGS, .23 CBM, Said to contain: 14 ea of transportation empty container of radioisotopes" and identified the source changers' model number (all were Amersham 500-SUs) and serial numbers.

Eleven days after leaving Pusan, the ship docked at a Port of Los Angles terminal, where the ocean container was removed and taken to a U.S. container freight station. Here the cargo was unloaded from the ocean container and damage to the crate containing the 14 source changers first documented. The crate and other freight destined for the East Coast were then loaded aboard an enclosed 48-foot trailer. Because the crate was to be the last item delivered,

the crate was positioned in the front-right corner of the trailer, close to the tractor cab. The tractor-trailer, driven by a senior driver and a driver trainee, arrived at its final destination, a trucking company warehouse near Logan Airport in Boston, Massachusetts, after a seven-day cross-country trip. The drivers made 14 stops, during the trip, to weigh the truck, obtain food and fuel, and to unload other freight. When the crate was unloaded at the Boston warehouse, the workers noted that the crate was severely damaged and that several of the source changers had fallen from the crate. The senior driver returned the source changers to the crate, and warehouse workers later attempted to repair the crate. The crate then remained in storage at the warehouse for 14 days, waiting release by the U.S. Customs Service, after which it was trucked to Amersham's facility.

In estimating whole-body doses for all persons who were postulated to have been exposed to radiation during the transportation and storage of a possibly unshielded source, the IIT found that it was unable to determine exactly when the source capsule may have been dislodged from the source changer tube or exactly where the source changer was positioned in the array of 14 changers. However, damage to the crate was observed when it was removed from the ocean container. Therefore, the IIT and the Korean authorities theorized that the crate was damaged when it was loaded into the ocean container, and that the impact may have been substantial enough to knock the source out of its shielded position. Estimates of radiation exposure were based on a worst-case analysis, which assumed that the source was located in the crate nearest any occupied areas, and that the source was unshielded by the depleted uranium shields in the same or adjacent source changers.

IIT estimates of exposure ranged from no significant exposure for a U.S. Department of Agriculture Plant Protection Quarantine Officer who boarded the cargo ship to inspect its food provisions, to more than 27 and 34 rem for the driver trainee and senior driver, respectively, who transported the crate cross-country. NRC also made arrangements with Oak Ridge Associated Universities (ORAU), Medical Sciences Division, for cytogenetic evaluation of the five persons identified as having the highest potential for exposure. The cytogenetic evaluation involved the examination of a randomly selected set of lymphocytes (a white blood cell) to determine how many in the set exhibit radiation-induced chromosome aberrations among 500 first-division metaphases. ORAU reported that four persons exhibited between 0 and 1 aberrations per 500 metaphases scored, indicating that they were in the range for non-irradiated persons. The only person known to have been actually exposed to the source, the driver who delivered the source changers to Amersham's facility (IIT estimated exposure was 500 millirem) exhibited 2 aberrations per 500 metaphases scored, which is consistent with the estimated radiation exposure, but not an indication of significant exposure. Korean authorities reported that no personnel exposures were identified for individuals who may have been exposed to the radioactive source in that country.

The IIT has detailed its description of the incident, the methodology used in its investigation, and presented its findings and conclusions in NUREG-1405. Individuals who may be interested in obtaining more information about the incident may purchase copies of NUREG-1405 from:

The Superintendent of Documents
U.S. Government Printing Office
P.O. Box 37082
Washington, DC 20013-7082
(202) 275-2060 or -2171

or

The National Technical Information Service
Springfield, VA 22161

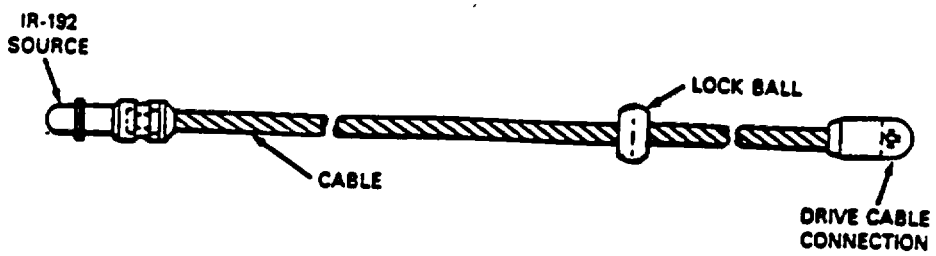

Typical Source Holder Assembly

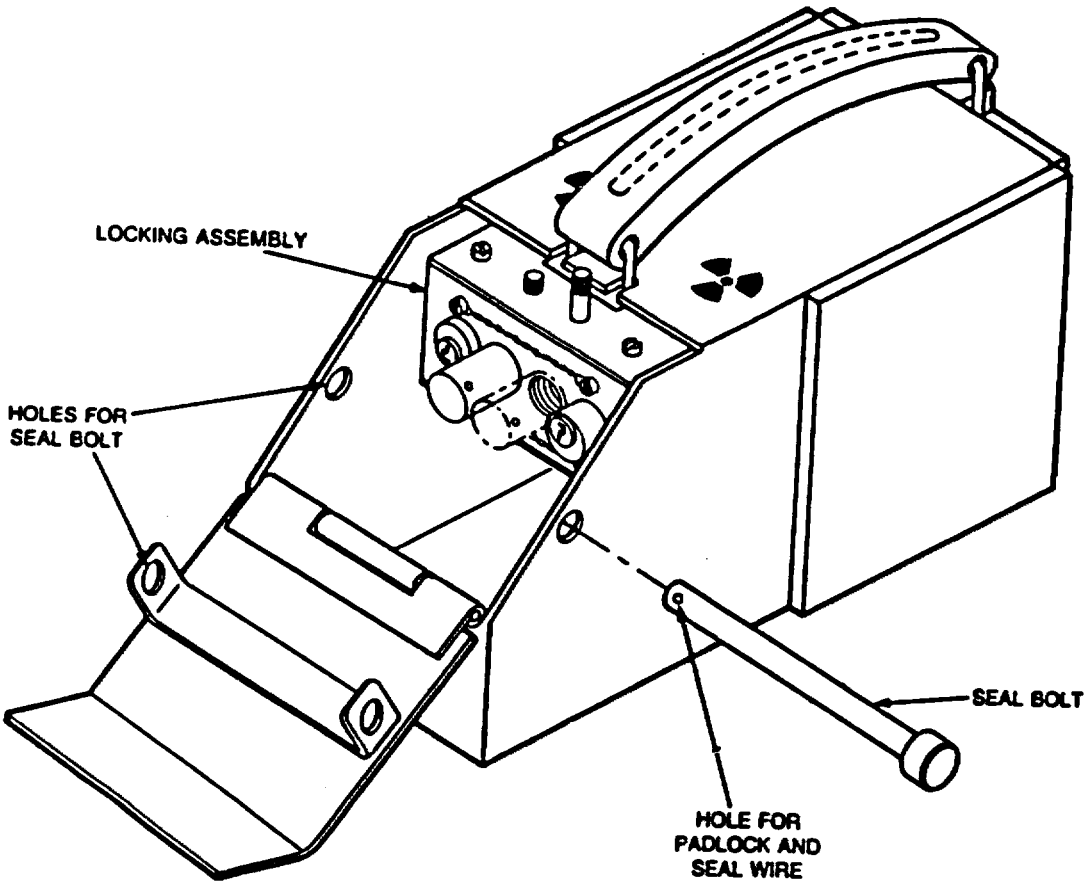

External View of Model 500-SU Source Changer

LIST OF RECENTLY ISSUED
NRC INFORMATION NOTICES

Information Notice No.	Subject	Date of Issuance	Issued to
90-55	Recent Operating Experience on Loss of Reactor Coolant Inventory While In A Shutdown Condition	8/31/90	All holders of OLs or CPs for nuclear power reactors.
83-44 Supp. 1	Potential Damage to Redundant Safety Equipment As A Result of Backflow Through the Equipment and Floor Drain System	8/30/90	All holders of OLs or CPs for nuclear power reactors.
90-54	Summary of Requalification Program Deficiencies	8/28/90	All holders of OLs or CPs for nuclear power reactors.
89-18 Supp. 1	Criminal Prosecution of Wrongdoing Committed by Suppliers of Nuclear Products or Services	8/24/90	All holders of OLs or CPs for nuclear power reactors.
90-53	Potential Failures of Auxiliary Steam Piping and the Possible Effects on the Operability of Vital Equipment	8/16/90	All holders of OLs or CPs for nuclear power reactors.
90-52	Retention of Broken Charpy Specimens	8/14/90	All holders of OLs or CPs for nuclear power reactors.
90-51	Failures of Voltage-Dropping Resistors in the Power Supply Circuitry of Electric Governor Systems	8/8/90	All holders of OLs or CPs for nuclear power reactors.
90-50	Minimization of Methane Gas in Plant Systems and Radwaste Shipping Containers	8/8/90	All holders of OLs or CPs for nuclear power reactors.

OL = Operating License
CP = Construction Permit