New York State Department of Environmental Conservation
Division of Environmental Permits, Region 8
6274 East Avon-Lima Road, Avon, New York 14414-9519
Phone: (585) 226-2466 • **FAX:** (585) 226-2830
Website: www.dec.state.ny.us

Erin M Crotty
Commissioner

10/10/02
67FR63171
(3)

December 11, 2002

Mr. Robert Schaaf
Project Manager
Office of Nuclear Reactor Regulation
U.S. Nuclear Regulatory Commission
Mail Stop o-11F1
Washington, DC 20555-0001

RECEIVED
2002 DEC 26 PM 3:44
Rules & Directives Branch
USNRC

Re: U.S. NRC Review - Written Comment
Nuclear Regulatory Commission Operating License Renewal
RG&E Ginna Nuclear Power Plant

Dear Mr. Schaaf:

The Department appreciated the opportunity to meet with Mr. John Tappert and the staff from the Pacific Northwest National Laboratory during the scoping meetings on November 13, 2002. Please extend our thanks to Mr. Tappert for visiting our regional office and hearing our concerns pertaining to the License Renewal Project for the Ginna Nuclear Power Plant. I am providing written comment in this letter for your consideration in scoping the Supplemental Environmental Impact Statement (SEIS). These comments are attached.

During our meeting in November, Mr. Tappert asked whether the Department could issue the 401 WQC prior to the issuance of the SEIS in June of 2003. In accordance with the Clean Water Act, the 401 WQC will be issued within a year of the receipt of the application from RG&E, or by October 7, 2003. Department staff will make a best faith effort to issue the 401 WQC as soon as possible. However, the Department has to satisfy the requirements of the both the State Environmental Quality Review Act (SEQRA) and the Uniform Procedures Act (UPA) prior to making the 401 Water Quality Certification decision. The implementing regulation for SEQRA, the State Environmental Quality Review (SEQR), lays out the process for actions involving a federal agency. Specifically, 6 NYCRR Part 617.15 states that when a draft and final EIS has been prepared under the federal NEPA process, the State has no obligation to prepare an additional EIS, provided that the federal EIS is sufficient to make findings Therefore, the state must have enough information to consider the relevant environmental impacts disclosed in the FEIS, weigh and balance relevant environmental impacts with social, economic and other considerations, provide a rationale for the Department's decision and certify that the action avoids or minimizes adverse environmental impacts to the maximum extent practicable, as they relate the Department's Water Quality

E-RIDS = ADM-03
Add = R. Schaaf (RES)

Template = ADM-013

Standards (see 6 NYCRR Part 617.11) The Department may be able to make findings prior to the issuance of the FEIS if the information available allows for decision making and findings requirements

Following the conclusion of the SEQR process, the Department must comply with the implementing regulations of the Uniform Procedures Act, Part 6 NYCRR 621. This regulation establishes time frames for deeming the application "complete" and for issuing a final decision. The act also lays out requirements for deeming an application "major" or "minor," issuing a public notice, responding to public comments, and determining the need to conduct a public hearing. A "major" application must be public noticed A Certification made in accordance with Section 401 of the Clean Water Act is determined to be minor if it does not exceed the minor thresholds established in Part 621 for protection of waters, freshwater wetlands, or tidal wetlands, and which do not involve the approval of construction and operation of hydroelectric generating facilities. The Ginna 401 WQC application is below these thresholds, however, the Department would likely deem the application "major" because it may have significant impacts on the environment. In addition, we feel that a public notice is appropriate [see Part 621.3(c)] due to the potential for widespread public interest.

Following the conclusion of the public comment period (15 days) and the response to public comments, the 401 WQC decision may be made. As we stated earlier, we will continue to work with the NRC to issue the 401 WQC as soon as possible based on the development of information under the federal NEPA process.

Please contact me directly if you have any questions regarding the regulatory discussion above or the attached comments.

Sincerely,

Kimberly Merchant

Kimberly A. Merchant
Environmental Analyst 1

Enclosure: License Renewal Environmental Review Process NYSDEC Comments

cc: W. Sarbello, Bureau of Habitat, NYSDEC, C.O.
M. Calaban, Bureau of Habitat, NYSDEC, C.O.
W. Abraham, Fisheries, NYSDEC Region 8
W. Pearsall, Fisheries, NYSDEC, Region 8
L. Kuwik, Environmental Permits, NYSDEC, C.O.
F. Ricotta, Regional Water Engineer, NYSDEC, Region 8
P. Schmied, Division of Water, NYSDEC, Region 8
J. Kelleher, Division of Water, NYSDEC, C.O.
D. Persson, Division of Water, NYSDEC, Region 8
W. Little, Legal Division, NYSDEC, C.O.
J. Abunaw, Radiation Section, NYSDEC, C.O.
D. Rollins, Division of Solid and Hazardous Materials, NYSDEC, R8
G. Wrobel, RG&E
D. Money, RG&E
V. Barr, NYSDOS
S. Ressler, NYSDOS
U.S. Fish and Wildlife Service
U.S. Environmental Protection Agency
NYS OPRHP

NYSDEC Comments on the RG&E Nuclear Power Plant License Renewal Environmental Review Process

Entrainment

Staff have determined that the existing entrainment study (conducted in 1977) is out of date and should be updated as part of the application for NRC license extension of the Ginna facility. The initial study was conducted to meet the requirements of the 401 Water Quality Certification issued by the Department in 1974. The existing data is more than twenty years old and Lake Ontario conditions have changed considerably in this time period - including changes in populations of zebra and quagga mussels (*Dreissena sp*), alewives, gobies, smallmouth bass, climate, etc.. In addition, the 1977 study was for a very limited period of the year. More recent entrainment studies required by the Department have included studies over longer periods of time, some of which have demonstrated entrainment impacts at Lake Ontario cooling water intakes. Therefore, an updated study is recommended in order for the Department to evaluate the impacts of the facility due to entrainment. Subsequently, the Department has incorporated an entrainment study into the Draft State Pollutant Discharge Elimination System (SPDES) Permit. RG&E has commented on the draft SPDES and the Department has incorporated their comments. The draft SPDES permit is attached. The requirement to conduct an updated entrainment study will also be included as a condition of the new 401 Water Quality Certification.

<u>We recommend that the SEIS include a brief summary on the 1977 entrainment study results and the proposal to conduct an updated study of in-plant entrainment</u>

Impingement

The Department State Pollutant Discharge Elimination System (SPDES) permit requires annual impingement sampling and reporting (Additional Condition 4 of the SPDES Permit). We recommended that RG&E use the impingement reports to summarize the facility's potential impact to fish populations in Lake Ontario in the Environmental Report. RG&E did provide this summary.

The Department has determined that the population of gobies will be increasing in Lake Ontario over the next few years. Therefore, the Department requested that this species be added as a target species to the impingement study. RG&E agreed to this request. In addition, RG&E requested that yellow perch be eliminated as a target species. However, the Department felt that yellow perch should remain a target species in the impingement study due to increased numbers of this species in area bays off Lake Ontario.

Impingement mitigation is required in Additional Condition #5 of the SPDES permit. The facility has met these conditions. For example, RG&E meets Condition 5.a, which requires that the traveling screens be washed for approximately 15 minutes per hour on a daily basis. In addition, the facility has made improvements to the screen washwater/fish and debris sluice as required to improve protection of impinged fish.

Department staff attended a site visit on April 22, 2002 and inspected the traveling screens. The facility utilizes four traveling screens, each with 48 baskets. The original basket mesh material is galvanized wire. An evaluation of the four traveling screens by Ginna Station personnel revealed a need to upgrade their efficiency to better manage impinged algae. The amount of algae impinged from the lake has increased to the degree where the existing screens can no longer efficiently remove the algae before it either reaches the plant's circulating pumps (and travels through the plants circulating water system) or clogs the traveling screens.

Two of the four screens have been replaced within the last few years with new stainless steel mesh. Future plans schedule a yearly replacement for each of the remaining two traveling screens. The modifications made to the "A" and "D" traveling screens are as follows:

- The screen mesh is now made of stainless steel and has a "crimped fit" construction, resulting in a smoother texture. This texture will help to enhance fish survival, as the fish will experience fewer traumas.
- The configuration of each individual clear mesh opening has been changed from 3/8" x 3/8" clear opening to 3/16" x 1" clear opening, purchased from Screening Systems International. This change results in an overall reduction of the clear open area of 3% based, on the increase in the amount of wire used within the length of the traveling screens.
- The screens have been coated with an anti-fouling material called Wearlon Super F3 Hydro. This foul-release coating is the same coating previously used on the Ginna plant's intake structure's trash bars (previously submitted June 13, 2000 letter per Additional Requirement #2). Wearlon has been used by numerous organizations including Niagara Mohawk, the University of Buffalo and the city of Oswego Water Authority. The new screens are more protective of impinged fish.

The Department concurs that these two new screens are a significant improvement and agrees that RG&E's schedule to replace the two additional older screens with the newer screens over the next two year period is acceptable to meet Best Technology Available (BTA) standards.

<u>We recommend that the SEIS include a brief summary on impingement report results and the commitment of RG&E to continue to replace older screens</u>

Heat Shock for Plants with Once-through Cooling

David Persson, Division of Water Engineer, inspected the facility on March 20, 2002 and issued an Annual Inspection report to the facility on March 22, 2002. This report, which incorporated a review of the facility's Discharge Monitoring Reports, indicated that the facility is in compliance with the SPDES permit. The permit limits include a maximum discharge temperature at the outfall of 102 degrees Fahrenheit, with a temperature difference of 28 degrees Fahrenheit. Additional requirement #6 of the SPDES Permit requires that the thermal discharge from the facility assure the protection and propagation of a balanced indigenous population of shellfish, fish and wildlife in and on Lake Ontario. In this regard, the Department approved the permittee's request for alternative effluent limitations pursuant to Section 316(a) of the Clean Water Act and 6 NYCRR Part 704 for the 5 year life of the permit (these limits have been rolled over at each permit renewal since 1974). The effluent limitations in the SPDES permit reflect this approval. The water temperature at the surface of Lake Ontario shall not be raised more than three Fahrenheit degrees over the temperature that existed before the addition of heat of artificial origin, with the exception of the mixing zone consisting of an area of 320 acres from the point of discharge, in which this temperature may be exceeded. The permit limits of maximum discharge temperature of 102 degrees

Fahrenheit and temperature difference of 28 degrees Fahrenheit were established by a modeling study of the mixing zone.

Department staff identified the potential for increased fish mortality due to the return of the impinged fish to the discharge canal, which contains elevated temperatures from the cooling water effluent. RG&E included a brief discussion on this issue in the Environmental Report Staff did not have enough information from this discussion to determine whether the elevated temperatures in the discharge canal result in additional fish mortality. On Monday, December 9, 2002, RG&E provided staff with a copy of the 316(a) Demonstration and Supplement (March 1977) to see if the report addresses the Department's concerns. Staff have not had the opportunity to review the report, however, they will be reviewing it over the next few weeks.

We will continue to discuss the issue with RG&E and NRC on this issue. Depending on the information provided in the 316(a) report, we may either recommend further study, recommend an extension of the impinged fish return, or conclude that the concerns have been addressed In the interim, we recommend that the SEIS include a discussion regarding Heat Shock

Threatened or Endangered Species

In a letter dated February 25, 2002, the United States Department of the Interior Fish and Wildlife Service indicated that there are no federally listed or proposed endangered or threatened species under their jurisdiction known to exist in the project area. The Department researched New York State's Natural Heritage Database and determined that no threatened, endangered, rare, or protected species are known to exist in the project area.

No new construction is proposed as a part of this application. Therefore, undisturbed areas will not be impacted by the renewal of the facility license, however, the facility will continue ongoing maintenance of the existing facility and the transmission corridor.

The Department does not have concerns about the ongoing maintenance activities, therefore, we do have any recommendations for inclusion of this issue in the SEIS.

Electromagnetic fields (Acute Effects) - No comments

Public Services - No comments

Off-site Land use - No comments

Public services - No comments

Historic and archeological resources -

No new construction is proposed as a part of this application. Therefore, additional historic or

archeological resources will not be impacted by the renewal of the facility license.

The Department does not have any concerns on this issue and therefore, does not recommend that it be included in the scope of the SEIS. However, we defer to the New York State Office of Parks, Recreation, and Historic Preservation for their comments on this issue.

Issues Not Identified as Category 2:

6 NYCRR Part 373 Hazardous Waste Facility Permit

Because RG&E Ginna managed mixed low level radioactive/hazardous waste prior to the promulgation of the current regulation, the company was eligible for Interim Status pursuant to 6 NYCRR Part 373-3. This allows the continued storage of this waste beyond hazardous waste generator time limits. RG&E does not currently have any mixed low level radioactive/hazardous waste at the facility; however, they wish to retain the 373 permit for potential future needs During the Interim Status period, a complete permit application is typically required to be submitted by a facility in order to obtain Final Status pursuant to Part 373-2. USEPA has recently changed the permit requirements for mixed low level radioactive/hazardous waste. This type of storage is now exempt from a federal Resource Conservation and Recovery Act (RCRA) permit as long as the facility complies with NRC rules see 40 CFR Part 266). New York State is a delegated state under RCRA, but has not yet adopted this exemption. Staff have been advised that New York is evaluating the acceptance of the exemption. Due to the potential exemption from 373 jurisdiction, the Department will not require RG&E to submit a complete permit application. However, RG&E will need to continue to pay regulatory fees in order to retain Interim Status Fees will be eliminated if the permit exemption is adopted by DEC. Department staff will continue to inspect the facility on an approximately annual basis in the interim

Although the Department does not have concerns regarding state regulated hazardous waste storage, staff recommend that the future handling of the spent fuel inventory and containment be addressed in the SEIS

Shoreline Protection - Coastal Erosion Issues

Department staff requested that RG&E provide an evaluation of the on-going coastal erosion on-site and at neighboring properties to the Environmental Report. A brief discussion was provided. As we discussed with Mr. Tappert and Mr. Lance Vail, Department staff have concerns about the ongoing coastal erosion on both sides of the shoreline protection. Subsequently, we have added a condition to the recent Article 34 Coastal Erosion Control Permit to RG&E, to require a survey of the existing shoreline.

We recommend that the ongoing coastal erosion issues be addressed in the SEIS. The survey should be prepared in time for inclusion into the SEIS. We recommend that the federal NEPA process identify whether any additional shoreline protection is required to protect the facility over the renewal permit term

Enclosures: **Draft SPDES Permit**

FINAL EFFLUENT LIMITATIONS AND MONITORING REQUIREMENTS

During the period beginning EDM
and lasting until ExDP
the discharges from the permitted facility shall be limited and monitored by the permittee as specified below:

Minimum Monitoring Requirements

Outfall Number & Sample Effluent Parameter	Discharge Limitations Daily Avg.	Daily Max.	Units	Measurement Frequency	Type
001-C Radiation Waste Holdup and Treatment System (Includes Condensate Tank, A&B Monitor Tanks, Laundry Tanks)					
Flow	NA	Monitor	GPD	Quarterly	Grab
Oil & Grease	NA	15	mg/l	Quarterly	Grab
Suspended Solids	30	100	mg/l	Quarterly	Grab
pH (Range)	6.0 - 9.0		SU	Quarterly	Grab[b]
Boron	140	NA	lbs/day	Quarterly	Grab

001-D Screenwash Return Water

(No monitoring required)

NOTES:

a. Chlorine may be discharged up to 120 minutes per day.

b. The pH limit may be exceeded when conductivity is less than 10 micro mhos per cm^2. Conductivity monitoring is only required when the pH limit is exceeded.

DEFINITIONS OF DAILY AVERAGE AND DAILY MAXIMUM

The daily average discharge is the total discharge by weight or in other appropriate units as specified herein, during a calendar month divided by the number of days in the month that the production or commercial facility was operating. Where less than daily sampling is required by this permit, the daily average discharge shall be determined by the summation of all the measured daily discharges in appropriate units as specified herein divided by the number of days during the calendar month when measurements were made.

The daily maximum discharge means the total discharge by weight or in other appropriate units as specified herein, during any calendar day.

MONITORING LOCATIONS

The permittee shall take samples and measurements, to comply with the monitoring requirements specified in this permit, at the location(s) indicated below: (Show sampling locations and outfalls with sketch or flow diagram as appropriate) (see page 7 of 13)

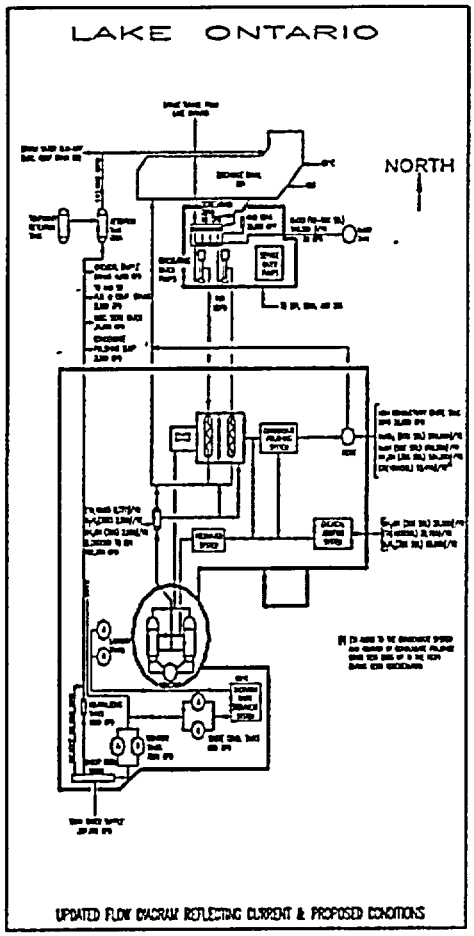

Additional Requirements

1. The permittee shall submit written notification, which shall include detailed descriptions and appropriate figures, to the DEC Chief, Bureau of Environmental Protection, Regional Fisheries Manager and Regional Engineer at least 60 days in advance of any change which results in the alteration of the location, design, construction, operations or capacity of the cooling water intake structure. The permittee shall submit, with its written notification a demonstration that the change reflects the best technology currently available for minimizing adverse environmental impact. Prior DEC approval is required before initiating such change. A permit modification may be required.

2. Each impingement report submitted during this permit period shall include figures and a complete description of the cooling water intake system including trash racks; traveling screen type, size, mesh, and standard operating procedures; screen washwater discharge sluice configuration and disposition of screen washings, and the nature and estimated quantities of debris collected at this facility.

3. Impingement Monitoring Program.

   a. An annual impingement monitoring program is required in order to document the impact of this facility on the aquatic environment of Lake Ontario. The methodologies described in Ginna Nuclear Power Station Impingement Plan of Study, RG&E Report No. B-13-293 (July 1985) are required with the following modification:

      i. The wire mesh collection basket that fits into the screenwash sluiceway shall be constructed of mesh that is approximately 1/2 of the bar mesh of the traveling screens in order to minimize loss of organisms washed off the traveling screens.

b. At the permittee's option a modified impingement abundance program may be submitted for DEC review and approval. The goal of the modified program would be to reduce the cost of impingement monitoring while continuing to provide adequate information for the department's determination to 6NYCRR 704 and the Clean Water Act Section 316. The impingement program identified in 3.a above shall continue in effect until an alternative is approved by the DEC.

4. Impingement Mitigation

a. During any time when a circulating pump is operational each traveling screen shall be washed for approximately fifteen (15) minutes each hour, excepting when a screen is inoperable due to required maintenance.

b. No sampling gear other impediments to the return of impinged fish to Lake Ontario shall be placed int he washwater sluice excepting those necessary to conduct studies approved by the DEC.

5. The thermal discharge from this facility shall assure the protection and propagation of a balanced indigenous population of shellfish, fish and wildlife in and on Lake Ontario. In this regard, the Department has approved the permittee's request for alternative effluent limitations pursuant to Section 316(a) of the Clean Water Act for the 5 year life of the permit. The effluent limitations in this permit reflect this approval. The water temperature at the surface of Lake Ontario shall not be raised more than three Fahrenheit degrees over the temperature that existed before the addition of heat of artificial origin except that in a mixing zone consisting of an area of 320 acres from the point of discharge, this temperature may be exceeded.

6. Reporting

a. A copy of all reports pertaining to environmental impacts on water resulting from this facility, which the applicant submits to any federal, state or local agency, shall also be submitted to the Department of Environmental Conservation offices in Avon and Albany. The permittee shall also notify the Department within one week from the time of submission to the Nuclear Regulatory Commission of any requested change in the environmental technical specifications which could effect the requirements of this permit.

b. Report(s) submitted in fulfillment of permit conditions shall clearly identify on the title page the permit number and the specific section(s) by character and number that the report(s) fulfill. Each section of the text of such report shall identify the section(s) of the permit that it fulfills.

c. The annual impingement monitoring report shall be submitted by July 1 of the following year. The analyses, content and appendices shall follow that provided in previous impingement abundance reports as in RG&E Report No. B-13-357- Rochester Gas and Electric Corporation Fish Impingement Program Analysis Report.

7. A one year study shall be conducted to monitor the entrainment of aquatic organisms in the station's cooling water flow. The goals of the study are to determine the abundance, species composition and life stage of organisms entrained, and help ascertain whether the operation of the cooling water intake system constitutes best technology available for minimizing adverse environmental impact. By EDM + 6 months, the permittee shall submit for review and approval a scope of work to conduct the study, consistent with the following guidelines.

a. One 24 hour sample will be collected each week from April 1st through September 30th. Each collection will be scheduled to take place within the first two days of each seven day period, so that the remainder of the period is available for an alternate collection should plant operation or equipment malfunction prevent a collection on the day initially scheduled.

b. Each sample shall be divided into four discrete 6 hour periods (sub-samples). Total daily sample volume is to be at least 200 cubic meters. The volume of water sampled is to be accurately recorded using calibrated flow meters. If a pump sampler is to be used (e.g. trash pump), excessive flow rates are to be avoided that may cause extrusion of organisms through the net mesh and loss of sample

c. At the beginning of each 6 hour subsample, water quality measurements (temperature and dissolved oxygen) are to be taken at both the intake and cooling water discharge canal.

d. If samples are collected from within the screenhouse, they shall be taken from multiple depths unless it can be demonstrated to the Department's Satisfaction that adequate mixing exists and organisms are not stratified within the water column at that location.

e. Ichthyoplankton nets used for sample collection shall have a mesh size of 505 microns or less.

f. All samples are to be analyzed for icthyoplankton, *Mysis relicta*, and *Pontoporeia affinis*. Ichthyoplankton are to be identified by species and life stage (egg, yolk-sac larvae, post yolk-sac larvae, and juvenile). From each sample up to 30 individuals per life stage per species will be measured to the nearest 0.1 mm.

g. All methods for sample collection and handling, sample processing, quality control and quality assurance shall be fully described in the scope of work.

8. Within 6 months after the completion of the study, a final report shall be submitted to DEC describing the results of the study. The report shall describe all methods used and present data on the density and abundance of species and life stages entrained over the diel cycle, making liberal use of tabular data. Plant operational data such as weekly cooling water flows, timing of outages etc. as well as all excursions or deviations from the approved scope of work shall also be included. All reports and all other required information shall be submitted to the following Department Offices: NYSDEC Chief, Bureau of Habitat, 625 Broadway - 5th Floor, Albany, NY 12233-4756; and a copy each to the NYSDEC Region 8 Supervisor of Natural Resources, Regional Fisheries Manager and Regional Water Engineer, 6274 East Avon-Lima Road, Avon, NY 14414.

9. DEC will review the results of the permittee's entrainment monitoring study, and any other relevant information, to determine whether the cooling water intake at the Ginna Nuclear Generating Station represents best technology available for minimizing adverse environmental impact as required under NYCRR Part 704.5, and section 316(b) of the Clean Water Act, 33 U.S.C. Section 1326(b).

a. If DEC determines that the cooling water intake is causing an adverse environmental impact and requires mitigative action be taken, then the permittee must, within 9 months of DEC notification, submit an intake technology report to the offices listed in No. 2. The report shall discuss the range of mitigation alternatives available for reducing impacts in terms of their engineering feasibility, reliability, cost, and the degree of mitigation likely to be achieved.

b. DEC shall determine, from the alternatives presented and from other relevant information available, appropriate mitigation for the facility that minimizes adverse environmental impact, consistent with the considerations listed above. Within 12 months of DEC approval, the permittee shall submit plans and a schedule for the construction, operation and maintenance of the selected alternative(s), and if determined to be necessary, a plan to verify the effectiveness of the alternative(s) to minimize adverse environmental impact.

10. Biological specimens may be required to be submitted to NYSDEC upon request if notice by the Department is given prior to collection.

11. There shall be no discharge of auxiliary boiler chemical cleaning wastes and other metal cleaning wastewaters other than those using boric acid.

12. In regards to general condition #11.5 items c and d shall be reported annually to NYSDEC offices in Avon.

13. The permittee shall submit on an annual basis a report to the Department's offices in Albany and Avon by the 28th of the month next following the end of the period:

    a. Daily minimum, average, and maximum station electrical output shall be determined and logged.

    b. Daily minimum, average, and maximum water use shall be directly or indirectly measured or calculated and logged.

    c. Daily minimum, average, and maximum intake and discharge temperatures shall be logged.

    d. Measurement in a,b, and c shall be taken on an hourly basis.

14. There shall be no discharge of PCB's from this facility.

15. Radioactivity: Concentrations of radioactivity in effluent are subject to the requirements of the U.S. Nuclear Regulatory Commission license conditions.

16. Ethanolamine (ETA) used for iron transport control at the Ginna secondary system through the feed-water supply shall be maintained at a concentration in Outfall 001 of less than or equal to 0.7 mg/l. Method of determination of this concentration in outfall 00q shall be calculated by the feed rate. A log shall be maintained subject to the reporting requirements of the WTCFX.

SCHEDULE OF COMPLIANCE

a) The permittee shall comply with the following schedule.

Action Code	Outfall Number(s)	Compliance Action	Due Date
34599	001D	Annual impingement monitoring report on the program required in Additional Requirement #3 of this permit.	July 1 of the following year from data collection
01299	001D	Submit Scope of Work Plan as required for Entrainment Study (as required A.R. #7)	EDM + 6 months
01299	001D	Submit Final Report on Entrainment Program (A.R. #7.2)	Within 6 Months of Completion of Study

b) The permittee shall submit a written notice of compliance or non-compliance with each of the above schedule dates no later than 14 days following each elapsed date, unless conditions require more immediate notice under terms of the General Conditions (Part II), Section 5. All such compliance or non-compliance notification shall be sent to the locations listed under the section of this permit entitled RECORDING, REPORTING AND ADDITIONAL MONITORING REQUIREMENTS. Each notice of non-compliance shall include the following information:

1. A short description of the non-compliance;
2. A description of any actions taken or proposed by the permittee to comply with the elapsed schedule requirements without further delay and to limit environmental impact associated with the non-compliance;
3. A description or any factors which tend to explain or mitigate the non-compliance; and
4. An estimate of the date the permittee will comply with the elapsed schedule requirement and an assessment of the probability that the permittee will meet the next scheduled requirement on time.

c) The permittee shall submit copies of any document required by the above schedule of compliance to NYSDEC Regional Water Engineer at the location listed under the section of this permit entitled RECORDING, REPORTING AND ADDITIONAL MONITORING REQUIREMENTS, unless otherwise specified in this permit or in writing by the Department.