Westinghouse

Westinghouse Electric Company
Nuclear Power Plants
P.O. Box 355
Pittsburgh, Pennsylvania 15230-0355
USA

U.S. Nuclear Regulatory Commission
Document Control Desk
Washington, D.C. 20555

Direct tel. 412-374-5355
Direct fax: 412-374-5456
e-mail: corletmm@westinghouse.com

Your ref: Docket No. 52-006
Our ref. DCP/NRC1580

April 24, 2003

SUBJECT: Transmittal of Westinghouse Responses to US NRC Requests for Additional Information on the AP1000 Application for Design Certification

This letter transmits the Westinghouse responses to NRC Requests for Additional Information (RAI) regarding our application for Design Certification of the AP1000 Standard Plant. A list of the RAI responses that are transmitted with this letter is provided in Attachment 1. Attachment 2 provides the RAI responses.

Please contact me if you have questions regarding this submittal.

Very truly yours,

M. M. Corletti

M. M. Corletti
Passive Plant Projects & Development
AP600 & AP1000 Projects

/Attachments

1. Table 1, "List of Westinghouse's Responses to RAIs Transmitted in DCP/NRC1580"
2. Westinghouse Non-Proprietary Response to US Nuclear Regulatory Commission Requests for Additional Information dated April 2003

3054alf

D063

DCP/NRC1580

April 24, 2003

Attachment 1

"List of Westinghouse's Responses to RAIs Transmitted in DCP/NRC1580"

Attachment 1

Table 1 "List of Westinghouse's Responses to RAIs Transmitted in DCP/NRC1580"
410.022 , Rev. 0 650.001, Rev. 1 650.004, Rev. 1 650.005, Rev. 1 650.006, Rev. 1

Attachment 2

Westinghouse Non-Proprietary Response to US Nuclear Regulatory Commission
Requests for Additional Information dated April 2003

A BNFL Group company

AP1000 DESIGN CERTIFICATION REVIEW

Response to Request For Additional Information

RAI Number: 410.022

Original Question:

Several HVAC equipment are identified in the ITAAC, however no corresponding reference in the DCD can be found for these equipment. The specific equipment in question are identified below:

Tag No.	Equipment
VBS-MA-11 and MA-12	I&C Divisions B and C Ancillary Fans
VXS-MS-04A through D	MSIV Compartments A, B C & D Air Handling Units
VXS-MS-08A & B	Valve Piping Penetration Rooms A & B Air Handling Units
VXS-MY-W01A, B & C	Annex Building Nonradioactive Equipment Room Unit Heaters
VXS-MS-07A and B	Mechanical Equipment Area Air Handling Units
VAS-030	Fuel Handling Area Differential Pressure Indicator
VAS-032	Annex Building Differential Pressure Indicator
VAS-033	Auxiliary Building Differential Pressure Indicator

Please revise the DCD accordingly.

Westinghouse Response:

The noted equipment do appear in the DCD, however, they are not identified with the tag number as shown in the ITAAC. Westinghouse will revise section 9.4 of the DCD to identify the equipment in question with the same tag number used in the ITAAC. Please refer to the "Design Control Document (DCD) Revision:" portion of this response for specific details.

Design Control Document (DCD) Revision:

Revise DCD 9.4.1.2.3.2, under "Abnormal Plant Operation", fifth paragraph, first sentence, as follows:

When complete ac power is lost, division B and C instrumentation and control room temperature is maintained by operating their respective ancillary fans **(VBS-MA-11 and VBS-MA-12)** to supply outside air to the I&C rooms.

Revise DCD 9.4.2.2.1.3, second paragraph, last sentence, as follows:

Hot water unit heaters **(VXS-MY-W01A, B & C)** are provided in the north air handling equipment room to maintain the area above 50°F.

Revise DCD 9.4.2.2.1.4, second paragraph, first sentence, as follows:
The main steam isolation valve compartment HVAC subsystem consists of two 100-percent-capacity supply air handling units per compartment **(VXS-MS-04A, B, C & D)** of about 3,300 scfm each with only low efficiency filters, ducted supply air distribution directly to the space served, automatic controls, and accessories for each main steam isolation valve compartment.

Revise DCD 9.4.2.2.1.5, second paragraph, first sentence, as follows:
The mechanical equipment areas HVAC subsystem consists of two 50 percent capacity air handling units **(VXS-MS-07A & B)** with supply fans and return/exhaust fans of about 2,200 scfm each, a ducted supply and return air system, automatic controls, and accessories.

Revise DCD 9.4.2.2.1.6, first paragraph, second sentence, as follows:
The valve/piping penetration room HVAC subsystem consists of two 100-percent-capacity air handling units **(VXS-MS-08A & B)** with supply fans of about 1,800 scfm each, a return air duct system, automatic controls, and accessories.

Revise DCD 9.4.3.5, fourth paragraph, second sentence, as follows:
Pressure differential indication and alarms are provided **via instruments (VAS-030, VAS-032 and VAS-033)** to control the negative pressure in the radiologically controlled areas of the auxiliary and annex buildings.

PRA Revision:

None

AP1000 DESIGN CERTIFICATION REVIEW

Response to Request For Additional Information

RAI Number: 650.001 (Response Revision 1)

Question:

In Section 6.3.2.2.7.2 of the AP1000 Design Control Document (DCD), entitled IRWST [in-containment refueling water storage tank] Screens, and Section 6.3.2.2.7.3, entitled Containment Recirculation Screens, the applicant states that the clearance of the IRWST and containment recirculation screens prevents debris larger than 0.125 inches from infiltrating the reactor coolant system and blocking fuel cooling passages. However, in Section 3.4.1.2.2.1, entitled Containment Flooding Events, the DCD also states that, following a loss-of-coolant accident (LOCA), the water level in containment would be sufficiently high to provide water flow back into the reactor coolant system via the break location. . . .

A breached reactor coolant system pipe would apparently present an unfiltered pathway into the primary system, through which pieces of debris orders of magnitude larger than 0.125 inches could infiltrate, because the IRWST and containment recirculation debris screens would be bypassed. Although the AP1000's safety-related core-cooling flowpaths do not contain the typical flow restrictions that have been considered for operating plants (e.g., pump clearances, spray nozzles, and throttle valves), the debris filters on the fuel assembly bottom nozzles appear (based upon the NRC staff's review of Section 4.2.2 of the DCD, and accompanying figures) to present a potentially adverse debris accumulation point. Therefore, the Nuclear Regulatory Commission (NRC) staff requests additional information from the applicant to ensure that the AP1000 design adequately considers the potential for debris to infiltrate the reactor coolant system through an unfiltered pathway (e.g., a ruptured pipe) and interrupt reactor core cooling by blocking requisite flowpaths.

Additional Question:

The applicant's response primarily addressed the potential for reflective metallic insulation (RMI) to bypass the in-containment refueling water storage tank (IRWST) and containment recirculation screens by entering the reactor vessel through the opening created by a ruptured pipe. Although the applicant's analysis concerning RMI partially addresses the staff's concern, the staff considers that other debris may also be of concern with respect to screen bypass.

For instance, in RAI 650.002, the staff identified a potential concern with resident fibrous material. The applicant's response does not provided a justification to conclude that detrimental quantities of fibrous material would not enter the reactor coolant system through the break location or that resident fiber would settle in the lower plenum of the AP1000 reactor vessel. What is the justification for concluding that resident fibrous material could not collect at the fuel assembly inlet debris screens and lead to inadequate core cooling?

Another potential concern not addressed in the applicant's response is floatable or neutrally buoyant debris, possibly from foreign material or debris generated from material used in

containment. During the time that the water level in containment is between the lower elevation of the breach in the ruptured pipe, and the breach's upper elevation, flow into the reactor coolant system would tend to draw in any debris floating on the surface of the containment pool, which could apparently result in a blockage concern in the core cooling flowpath.

Unqualified coatings outside the zone affected by the jet impingement from the pipe rupture would not necessarily be expected to fail immediately after an accident, but would apparently degrade and fail over a more extended time period. For this reason, the staff is unable to conclude that there would be ample time for all particulate debris of concern to settle to the containment floor, and that there would not be particulate debris in suspension at the time that the break location is submerged.

Westinghouse Response: < The original response has been revised as shown below to address the additional questions. >

For a postulated breach in the AP1000 reactor coolant system pipe, sufficient liquid would be provided from the IRWST to raise the level of the inventory in containment above the piping break location. For a postulated double ended guillotine break, at least 3600 seconds (1 hour) is required to raise the water level on the containment floor to above the reactor coolant system piping.

By the time the pool elevation reaches the break location, it is relatively quiescent. Blowdown ~~will~~**would** have been completed. IRWST drain down ~~will~~**would** be ongoing with the driving head of the flow from the IRWST to the reactor approaching its long-term cooling equilibrium value. Rooms and corridors below the flood level ~~will~~**would** have been filled. In general, other than around the break location, fluid velocities and turbulence levels in the pool ~~will~~**would** be low. **Also, even with the ADS valves open, the RCS pressure is several psi above the containment pressure. Therefore, as the containment water level passes the break elevation, there would be flow leaving the RCS. Not until the flood level rises a number of feet above the break elevation would water be able to enter the RCS through the break**

Several sources of debris are evaluated in this response, including:

- **Reflective metallic insulation debris**
- **Resident fibrous and particle debris**
- **Floatable debris**
- **Unqualified coating debris**

Reflective Metallic Insulation Debris:
A source of debris having a size of 0.125 inches or larger is the reflective metallic insulation (RMI) on high energy piping runs. The postulated piping break would result in the destruction of RMI in the immediate vicinity of the break location into debris of various sizes. RMI, however, is dense compared to water and ~~will~~**would** settle to the containment floor as the pool builds. The

long time taken by the pool to reach the postulated break location provides assurance that this debris ~~will~~**would** settle well before the water level reaches the break location.

Furthermore, for a postulated hot leg break, all flow from the IRWST would necessarily flow through the reactor vessel and out the break. This flow path would preclude the ingress of debris into the RCS.

For a postulated cold leg break, coolant flow to the core is equal to the boil-off rate needed to remove decay heat. Early in the event, with the containment water level below the break location, excess IRWST flow is ducted out the break. After the containment water level rises above the break elevation, it is possible for water to flow into the RCS, although it is unlikely that particulate debris ~~will~~**would** still be in suspension at this time, at least one hour after the accident. Therefore, it is also unlikely that debris would be ingested into the RCS through the postulated cold leg break.

Although it is unlikely, should debris larger than 0.125 inches be ingested through the postulated cold leg break location, it would settle in the bottom of the reactor vessel. As also noted in the preceding paragraph, for a postulated cold leg break, flow to the core would match boil-off. It has been previously demonstrated that post-accident boil-off flow rates in a typical large PWR (approximately 3400 mWt) are insufficient to transport 0.04-inch debris having a specific gravity of about 1.3 into the reactor core (Reference 1). This conclusion is applicable to the AP1000.

Thus **for reflective metallic insulation debris** there is no suitable transport mechanism to cause a blockage of the fuel assembly inlets. But even if local fuel inlet blockages were postulated to occur at the time when the water level in containment rises above the break, the open lattice structure of the fuel design ~~will~~**would** allow for significant cross-flow and mixing of coolant in the core. This cross-flow and mixing would provide sufficient core cooling.

In summary, debris of the size to be a concern is generated by the destruction of RMI by the break flow. Because of the high density of the RMI debris, the long time required to build the level of liquid in the pool to the break location, and relative quiescence of the pool, such debris ~~will~~**would** have settled to the containment floor prior to the liquid level reaching the break location. In the unlikely event that debris were suspended **in the** pool, ingress of debris into the AP1000 RCS by way of a postulated hot leg break would be precluded as all flow from the IRWST is ducted through the core and out that break location. Similarly, for a postulated cold leg break, IRWST flow in excess of the boil-off rate is exhausted through the break location. Should debris find its way into the RCS through a postulated cold leg break, the fluid velocities in the lower plenum of the reactor vessel are sufficiently low as to provide for the debris to settle in that volume.

Resident Fibrous and Particle Debris:
Another source of debris is resident fibrous and particle debris. Such debris might be close enough to the density of water that it would stay suspended in the containment water long enough that it could be transported to containment recirculation screens and possibly also into the RCS through a break that becomes flooded.

RAI response 650.005-R1 discusses the amount of such debris that might exist in the containment. It also describes an appropriate method to calculate the resulting pressure drop if this debris is transported to a containment recirc screen. That same method has been applied to a situation with a break location that becomes flooded and could allow some of this debris to enter the RCS. Key assumptions made in this evaluation include:

- The total amount of resident fibrous debris in the containment is 500 pounds (RAI 650.005-R1). It is assumed that this debris is divided 50/50 between fibers and particles.

- It is conservatively assumed that all of the resident debris in the containment is transported to the containment recirc screens or the RCS (via the break) in proportion with the relative flows. Note that even with a DVI line break in the loop compartment, there would be recirc flow through both IRWST screens.

- These conservative assumptions lead to a maximum of 60% of the resident debris entering the RCS through the break. The other 40% would to be trapped on the two recirculation screens. These debris amounts are based on the relative flows through the break and through the PXS recirc lines as shown on DCD figures 15.6.5.4C-13 and -14 after 7000 sec. Although the flow through the break into the RCS starts earlier than through the PXS recirc lines, it would take many hours to transport all of the debris to the RCS / recirc screens. For example, the total water mass in the containment floodup areas is about 5,236,000 lb. At a recirc flow of 180 lb/sec it would take about 10 hours for all of this water to flow through the RCS. The situation for the recirc screens is much less limiting than that discussed in RAI response 650.005-R1, so it is not discussed anymore in this RAI. 2.4 ft3 of fibers is calculated to enter the RCS through the break.

- The first location where debris may be trapped is on the bottom nozzle of the fuel assembly. Each nozzle has 632 flow holes that are 0.19 in inside diameter. These holes are spaced such that debris would accumulate across the whole nozzle area except the outside edge where there are no holes. The area that could accumulate debris is more than 66 ft2 considering all of the fuel assemblies. Another location where debris could be trapped is in the P-Grid, which is located just above the bottom nozzle. The area where debris could accumulate is defined as the fuel assembly area less the area taken by the fuel rods and thimbles for shutdown rods and I&C. The minimum flow area through this part of the core is 40.7 ft2. Using the smaller area (around the P-Grid) results in a fibrous bed thickness of 0.74 inches.

- The flow rate through the core is assumed to be 180 lb/sec. This flow is based on the maximum injection flows through both DVI lines as shown on DCD figures 15.6.5.4C-13 and -14 after 7000 sec.

- At the containment water conditions for this event, the volumetric flow rate would be 1330 gpm. At this flow rate, the water velocity approaching the debris is 0.036 ft/sec.

- With the above amounts of debris and flow rates, the pressure loss across the debris is about 1.0 psi. The basis for the pressure loss is presented in RAI 650.005-R1.

- The mechanism for driving flow through the core is the water level in the downcomer relative to the water/steam mixture level in the core region. In this case the downcomer water level is about 22 in below the top of the active fuel in the recirculation time frame (7000 sec), as shown in DCD figure 15.6.5.4C-1. This level is about 70 in below the DVI connection to the reactor vessel. The injection from the DVI lines would not be affected by the downcomer water level as long as the level is below the DVI connection. Therefore in case there is an additional pressure loss of 1.0 psi across the core, the downcomer water level would increase by about 29 in so that the flow through the core is maintained. The water level in the downcomer would still be 41 in below the DVI connection.

In summary, the bounding pressure loss through resident debris that might deposit on the lower core support plate would not reduce the flow to the core.

Floatable Debris:
The only known source of debris that could float on the water surface is something that was missed by the COL cleanliness program. In order for such floating debris to have a chance to enter the RCS it would have to remain floating for more than the hour it takes for the containment water level to rise to the break elevation. Even then, as the containment water level rises past the break elevation, there would be flow out of the RCS since the RCS is several psi above the containment pressure. Therefore floating debris could not enter the RCS as the water level passes the break elevation. Water from the containment only enters the break after the flood level rises far enough above the break elevation so that sufficient head is developed to overcome the pressure in the RCS. As a result, floating debris does not represent a challenge to being ingested into the RCS through a break.

Even if floating debris were to subsequently sink, there is not expected to be very much of this debris and it would have to sink relatively close to the break location in order for any to be ingested into the RCS. In addition, in the very unlikely event that some debris did enter the RCS and block the inlet to several fuel assemblies, the open lattice structure of the fuel design would allow for significant cross-flow and mixing of coolant in the core. This cross-flow and mixing would provide sufficient core cooling.

Unqualified Coating Debris:
Another source of debris is the failure of unqualified coatings. Coatings that are located in the zone affected by the jet impingement from the pipe rupture would be expected to

fail immediately. Such debris would settle out long before the containment flood level would rise above the break location (> 1 hour).

Coatings located outside the zone affected by the jet impingement might fail at any time, possibly after the flood level had risen above the break elevation. Note that although the coatings used inside the AP1000 containment (other than those on the inside of the containment shell) are classified as unqualified, the coatings themselves are required to be qualified. It is only the application and maintenance that are unqualified. As a result, the coatings (at least most of them) are expected to not fail.

In addition, the coatings are required to have a high specific gravity (> 1.3) which would promote the settling of such debris. As a result, only coatings that fail close to the break location could possibly enter the break / RCS.

Even if some coating debris do enter the RCS, they are expected to settle out in the lower plenum because of their requred high specific gravity (>1.3). It has been previously demonstrated that post-accident boil-off flow rates in a typical large PWR (approximately 3400 mWt) are insufficient to transport 0.04-inch debris having a specific gravity of about 1.3 into the reactor core (Reference 1).

Summary

~~Therefore, a~~Although the flood-up level of liquid in the AP1000 containment is above the RCS piping, postulated breaks in that piping do not provide a path for debris **other than resident debris** ~~larger than 0.125 inches~~ to be ingested into the RCS. **The impact of the resident debris (assuming both fiber and particles) is a small increase in the pressure drop that would occur over many hours. This increase in core pressure drop would be compensated for by an increase in the downcomer water level with no degradation in core cooling. Even if complete blockage of the inlets to some fuel inlet were postulated to occur, the open lattice structure of the fuel design allows for significant cross-flow and mixing of coolant in the core. This cross-flow and mixing provides sufficient core cooling.**

References

1. Andreychek, T. S., "Evaluating Effects of Debris Transport within a PWR Reactor Coolant System during Operation in the Recirculation Mode," Proceedings of the 4th Miami International Symposium on Multiphase Transport and Particulate Phenomena, 1986

Design Control Document (DCD) Revision:

None

AP1000 DESIGN CERTIFICATION REVIEW

Response to Request For Additional Information

PRA Revision:

None

AP1000 DESIGN CERTIFICATION REVIEW

Response to Request For Additional Information

RAI Number: 650.004 (Response Revision 1)

Question:

Section 6.3.2.2.3 of the DCD, entitled In-Containment Refueling Water Storage Tank, states that [t]he IRWST is stainless steel lined and does not contain material either in the tank or the recirculation path that could plug the outlet screens. Though the water in the IRWST would likely be relatively pure, the staff believes it is not likely to be completely free of debris, particularly considering the debris-concentrating potential afforded by the cycling of the IRWST inventory during refueling outages, and the opportunity for any suspended debris to settle to the IRWST floor during long periods of stagnation. The staff notes that as little as 1.5 cubic feet of fibrous debris could potentially cover both IRWST screens, which is a very small fraction of the tank's capacity of 73,900 cubic feet. If an automatic depressurization system (ADS) actuation occurs during an accident condition, any debris residing on the bottom of the tank (including heavier particulate matter) could be easily re-suspended by the consequent induced turbulence. Considering these NRC staff observations, please provide further information to clarify why fibrous and particulate debris settling onto the tank floor is not a concern for the IRWST screens, and clarify that the analysis concerning debris transport and head loss provided accounts for the most limiting IRWST conditions (e.g., during potentially turbulent conditions and at reduced tank levels as the switchover to recirculation approaches).

Additional Question:

What is the basis for the conclusion in the RAI response that ". . . any resident debris that might have settled on the IRWST floor prior to an accident is not likely to be stirred up by the ADS . . . ?" That is, what sort of analysis has been done to demonstrate that the turbulence conditions within the IRWST are sufficiently low at the floor of the tank during an ADS actuation?

Westinghouse Response: < The original response has been revised as shown below to address the additional question. >

The IRWST is a stainless steel lined storage tank located inside containment. Refer to Figure 650.004-1 and -2. The tank is normally closed off from the containment although there are large louvered vents located through the IRWST roof. The tank is 30.25 feet high (inside floor to ceiling). The tank extends around part of the containment from the refueling cavity past the pressurizer and is about 120 feet across. There are two ADS spargers located in one side of the tank. The bottom of the sparger arms are located about 16 feet above the floor of the tank. There are two separate PXS injection line connections from the bottom of the IRWST. Line A is on the ADS side and line B is on the other side with the PRHR HX. Each of these lines is protected by a screen assembly. Line A has a connection to the Spent Fuel Pool Cooling System (SFS) pumps. This line allows the SFS to recirculate the water in the IRWST to provide

cooling and purification as desired; the SFS recirculation flow returns to the IRWST in the PRHR HX side of the tank. This SFS can also be used to transfer IRWST water to and from the refueling cavity. Line B has a connection to the Normal Residual Heat Removal System (RNS). This line allows the RNS to recirculate the IRWST for purposes of mixing and cooling. Line B can be used to allow the RNS to provide long term post ADS core cooling via containment recirculation. The RNS does not use this line to provide short term low pressure injection; the RNS can provide this function using the SFS cask loading pit as a source of water.

Cleanliness of the IRWST Water

The IRWST is expected to be clean because of the purification provided by the SFS and the fact that this water is used during every refueling; if the water was not clean it would cause delays in the refueling operations. The SFS is used to transfer the IRWST water to and from the refueling cavity. The SFS also provides purification of the refueling cavity while the IRWST water is in the refueling cavity. The SFS has a demineralizer / filter connected with each SFS pump that can purify a significant portion of the total SFS pump flow. This purification is used when the IRWST is transferred to the refueling cavity, during refueling operations and during the transfer back to the IRWST. In addition, the SFS is expected to be used to purify the IRWST in a recirculation mode for several days following refueling operations. These operations should eliminate resident debris from being suspended in the IRWST water at the start of an accident and to limit the amount of resident debris that might settle out on the IRWST floor.

Potential for Stirring Up Debris Lying on IRWST Floor

As discussed above significant quantities of debris are not expected to settle out in the IRWST during normal operations. Even if such debris **did**~~were to have~~ settled onto the IRWST floor, **they are**~~it is~~ not expected to be stirred up in the limiting accident. **The basis for this statement is the discussion of the ADS design and plant behavior presented below and the observation of test results from the Low-Pressure Integral Systems Test at Oregon State University. OSU has a scaled ADS sparger. OSU test SB-12 is a DVI LOCA; it shows that the temperature near the bottom of the IRWST (below the PRHR HX bottom) shows essentially no temperature change out through ADS 4 actuation (Reference 1). Although this test was performed for AP600, the design of the IRWST, the ADS sparger and ADS stages 1, 2, 3 have not been changed for AP1000. As a result, the conclusions also apply to the AP1000.**

The ADS valves are designed to control the depressurization rate of the RCS. These same characteristics also limit the peak mass flow into the IRWST.

- ADS stage 1 are 4" valves. ADS stage 2/3 are 8" valves.
- ADS stage 1 valves open in 20 to 30 sec.

In a DVI LOCA, the ADS 1,2,3 valves only pass significant flow for about 6 minutes between their opening and shortly after the opening of the ADS 4 valves, as shown on DCD figure 15.6.5.4CB-67. During this time the IRWST remains highly subcooled, which significantly

reduces the agitation of the IRWST. Note that the bottom of the ADS sparger arms is 16 ft above the bottom of the tank. Once the ADS 4 valves open the flow through the ADS 1,2,3 valves drops to very low levels. A DVI LOCA is limiting with respect to IRWST injection performance because only one line is able to provide injection to the RCS while the other line spills. Note that the ADS spargers are located on one side of the IRWST. Any resident debris that might have settled out on the other side (PRHR HX side) will not see any significant agitation. Early in a DVI LOCA the flow injection from the IRWST through the intact DVI line is less than 180 lb/sec. This flow results in only 0.04 ft/sec flows at the face of the IRWST screens faces. Throughout the rest of the IRWST there is essentially no flow. As a result, any resident debris that might have settled on the IRWST floor prior to an accident is not likely to be stirred up by the ADS and any particles that are heavier than water will settle out before they can be transported to the screens.

In non-DVI LOCAs there are several factors that make the event less limiting:

- There will be injection flow through both DVI lines to the RCS.
- ADS will be actuated later with lower decay heat levels.
- The injection flows will be lower per DVI line / IRWST screen.

Potential for Washing Debris into IRWST During a Accident

It is unlikely that significant amounts of debris will be swept into the IRWST during an accident. The only process that is available to wash resident debris into the IRWST is the steam that condenses on the inside of the containment shell. These surfaces include the vertical containment walls and the containment dome. Although these surfaces are large, their orientation and their location well above the operating deck limit their potential residual debris loading. Although the AP1000 has a limited containment spray capability, it is only intended to be used following a core melt accident. As a result, the AP1000 will not see the large containment spray flows that greatly increase the amount of containment surfaces that would be washed into the IRWST.

Ability of IRWST Screens to Tolerate Debris

Even though there is a low probability of having debris in the IRWST and having that debris transported to the screens, the IRWST screens and the PXS have significant capability to tolerate debris. A bounding analysis of the pressure drop that could be caused by debris (fiber and particle) on the IRWST screens has been performed for the AP1000.

The assumptions used in the analysis include:

- A total of 500 lb of resident debris is assumed to be available in the containment. It is assumed that this debris is divided 50/50 between fibrous and particles. Further more, it is conservatively assumed that all of this debris is transported to the IRWST screens. Note that even with a DVI line break and a single failure there will be flow through both IRWST screens. These conservative assumptions lead to 2.0 ft3 of fibers deposited on each of the

2 IRWST screens. Refer to RAI response to 720.005-R1 for a more detailed discussion of the debris.

- With a screen area of 70 ft2 each, the resulting fibrous bed thickness will be 0.364 inches.
- The flow rate through the intact DVI line is assumed to be 160 lb/sec. This flow is based on the peak IRWST injection flow through the intact DVI line which occurs early in the accident (about 2700 sec, DCD figure 15.6.5.4B-71). At the IRWST water conditions for this event, the volumetric flow rate would be 1170 gpm.
- At this flow rate, the screen face velocity with this flow is 0.037 ft/sec.
- With the above amounts of debris and flow rates, the pressure loss across the debris is less than ~~0.09 feet water or 0.037~~**0.24** psi. The basis for the pressure loss is presented in RAI 720.005-**R1**.
- The pressure loss through the intact IRWST injection line from the IRWST to the RV downcomer is more than 5.8 psi at this flow rate. The increase in screen DP shown above is only ~~04.6~~%. The IRWST injection flow would only have to decrease ~~20.3~~% to compensate for this increase in screen DP. The **potential impact on PXS flow** ~~bounding pressure loss through the resident debris~~ is insignificant~~relative to the pressure loss in the line~~.

Therefore, it is concluded that the current AP1000 design is not susceptible to degradation of IRWST gravity injection flow due to IRWST screen blockage resulting from deposition of latent containment debris on the screens.

References:

1. **WCAP-14292, "OSU Test Analysis Report", September 1995.**

AP1000 DESIGN CERTIFICATION REVIEW

Response to Request For Additional Information

Design Control Document (DCD) Revision:

None

PRA Revision:

None

Figure 650.004-1 AP1000 IRWST Plan View

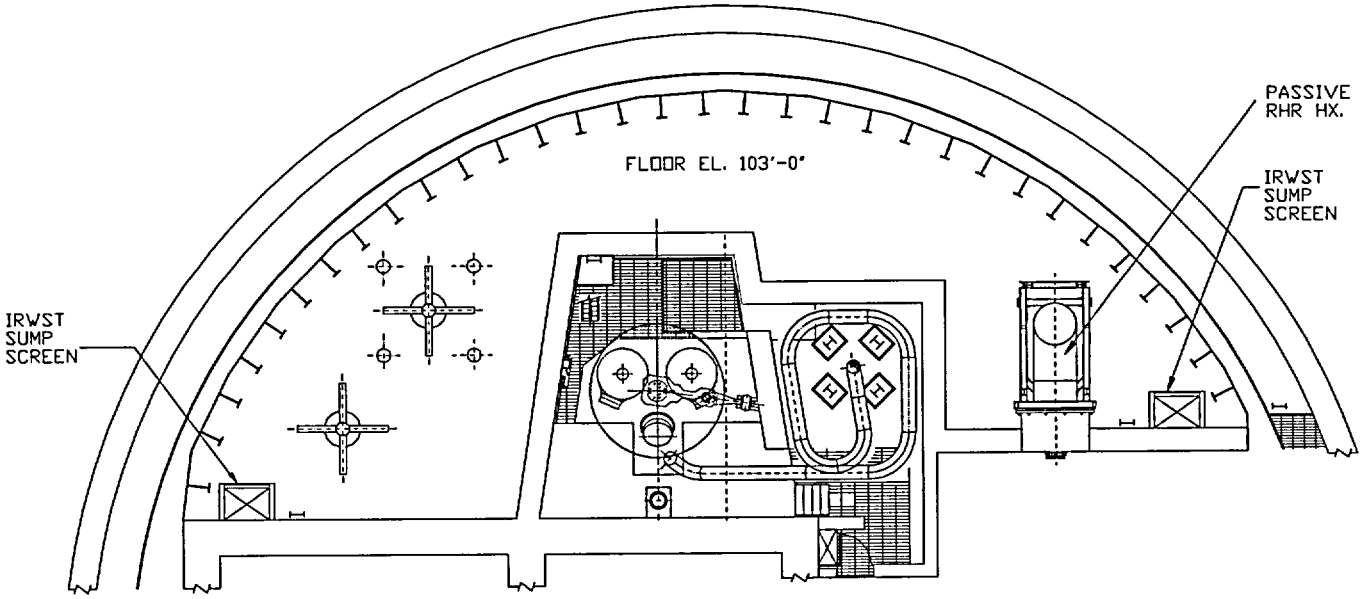

Figure 650.004-2 AP1000 IRWST Section View

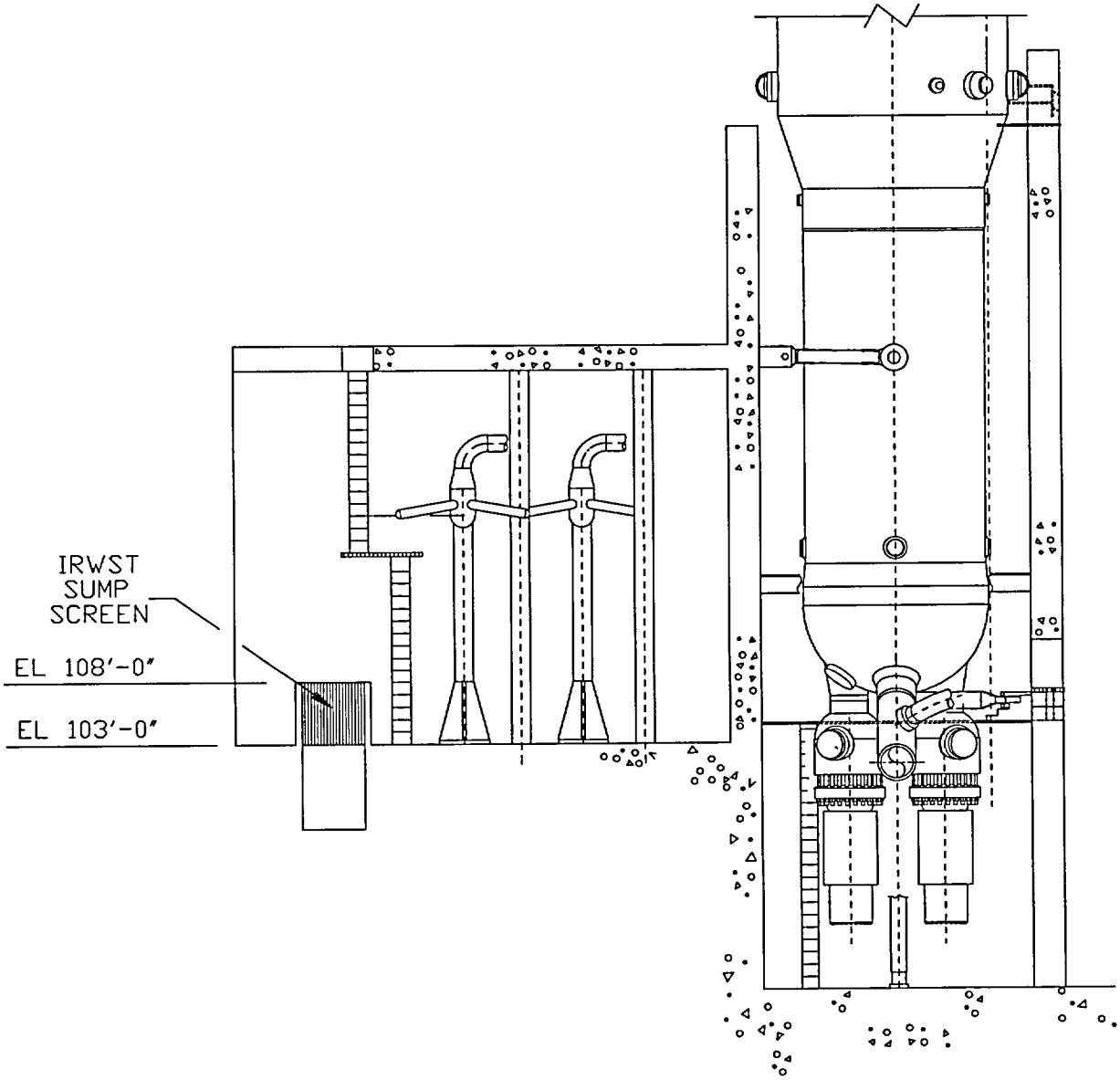

AP1000 DESIGN CERTIFICATION REVIEW

Response to Request For Additional Information

RAI Number: 650.005 (Response Revision 1)

Question:

Based upon its review of the DCD, the NRC staff was unable to locate an analysis of the debris-blockage failure criteria of the IRWST and recirculation screens. This apparent omission may be due to the fact that the applicant considers debris blockage failures to be incredible for design-basis events based upon the debris source control measures specified in the DCD. However, based upon the NRC staff's concerns related to resident fibrous material and other potential sources of fibrous debris (reference items 2 through 4 above), the staff believes it is possible that quantities of fibrous debris capable of blocking the entire surface areas of the IRWST and recirculation screens could be generated by a LOCA at an AP1000. As such, the staff believes it is essential for the applicant to provide further detail concerning: (a) how large a pressure head is available from natural circulation to drive the required flow rates through the IRWST and recirculation screens, (b) the maximum postulated head loss across the IRWST and recirculation screens, and (c) how much margin exists between the values for items (a) and (b).

Additional Question:

As part of the review of the applicant's response, the staff consulted NUREG/CR-6224, and the head loss code BLOCKAGE. Based on the review, the staff questions the applicant's analyses of debris blockage for the IRWST and containment recirculation screens, particularly the assumptions made for the density of the fibrous and particulate debris, and the calculation of the subsequently derived parameters (e.g., theoretical bed thickness and head loss). The applicant stated that the assumptions made concerning the fibrous and particulate debris were not intended to provide representative accuracy, but to allow a bounding calculation. However, the staff questions whether a basis exists for the applicant to use the data in NUREG/CR-6224 to make conclusions about such a material, considering that the applicant's assumptions do not appear to be conservative when they are carried through the entire calculation. Similarly, considering the data in NUREG/CR-6224 is based on sludge rather than a particulate more applicable to PWRs, there are concerns related to the use of this data in converting fibrous head losses to mixed bed head losses for the AP1000.

Westinghouse Response: < The original response has been revised as shown below to address the additional question. >

Fibrous insulation is not used inside containment of the AP1000 where it can be damaged by LOCA blowdown jets and is therefore not considered in responding to this item.

The postulated DVI line break is taken as the limiting break for responding to this issue. A DVI line break in a PXS room may render valves in the associated recirculating line inoperable because it can flood the recirculation squib valves before they are actuated. As a result, all of

the recirculation flow will pass through a single recirculation screen. This condition would maximize the potential for debris transport to and collection on the single operating recirculation screen, and head loss across the resulting debris bed. In addition, a DVI break in one of the PXS rooms results in lower containment flood levels. For LOCAs in other locations, both recirculation screens will be available which will result in lower flow rates through each screen. In addition, the containment flood levels will be higher.

Under long term cooling for a postulated DVI line break, the flow rate through the single operating recirculation screen is estimated to be about 180 lb/sec (refer to DCD figures 15.6.5.4C-13 and -14). This translates to a velocity of about 0.04 ft/sec at the recirculation screen face. This velocity would be smaller in other areas of the containment that are removed from the containment recirculation screens.

The parametric sump blockage evaluation performed for GSI-191 and reported in LA-UR-01-4083 (Reference 1) assumed a range of 100 lb to 500 lb for latent containment debris. The larger value will be used for this evaluation. Further, it will be assumed that 50% or one half of the latent containment debris will be in the form of fiber. Thus, the latent containment loading of fiber for this evaluation is assumed to range from 50 to 250 lb. Further, invoking the assumption that the fiber is buoyantly neutral, the volume of latent fibrous debris inside containment is calculated as:

$$debris\ volume = {debris\ mass}/{debris\ density}$$

Using the assumption of neutral buoyancy:

$$debris\ density = 62.4\ lb/ft^3$$

The ~~maximum~~**volume of** fibrous debris**, assuming perfect compaction (no voids in the fiber bed)** is calculated to be:

$$Volume = 4.0\ ft^3$$

A single AP1000 recirculation screen has a flow area of 70 ft2. Thus, assuming that all the fibrous debris is deposited onto the recirculation screen, **with a 5% porosity,** the thickness of the debris bed is calculated to be:

$$thickness = 4.0\ ft^3/(70\ ft^2 \times 0.95) = 0.0601\ ft = 0.72\ inches$$

The 5% porosity is considered a reasonable compaction of randomly oriented individual fibers and small collections of loosely attached fibrous material that might be resident in the AP1000 containment. Possible sources of this type of resident containment fiber are (human) hair and fibers from clothing.

Thus, assuming a latent containment debris loading of 500 lb, 50% of which is assumed to be fibrous, and assuming all of the latent fibrous debris is deposited on to the single operating recirculation screen, the resulting debris bed thickness is conservatively calculated to be approximately ~~5/8~~**3/4** inches thick.

There are several conservative assumptions incorporated into the fibrous debris bed thickness calculated above.

- First, a bounding value of 500 lb of latent containment debris was used. Although this is consistent with the parametric study performed for GSI-191 and the operating fleet of PWR's, it is more than three times larger that the values used in addressing BWR strainer blockage.

- Second, the volume of the available fiber is maximized by assuming the fiber density is equivalent to water. Use of a larger value of the density for latent fiber debris results in a smaller volume of the debris which, in turn, results in a ~~lower~~**smaller** fibrous debris bed thickness.

- Finally, although it is recognized that even at low flow rates, buoyant-neutral debris may migrate to the recirculation screen, no credit was taken for settling. From Table B-3, "Fibrous Debris Classification by Shape," of NUREG/CR 6224 (Reference 2), it is noted that even single strands of fiber will settle in calm pools. This evaluation took no credit for settling of fibrous debris.

The pressure drop through the mixed fiber bed is calculated using the method described in
Appendix B~~From Figure B-19~~ of NUREG/CR-6224 (Reference 2)~~,~~**. Several assumptions used in the calculation are identified below:**

- **The area-to-surface ratio of the fiber bed is taken to be the same as was used for fiberglass in Reference 2, which assumes the resident fibrous material postulated to be inside containment has a comparable surface area-to-volume ratio as fiberglass. This is taken to be a reasonable approximation.**

- **The specific gravity of the particulate debris is taken as 1.1. Assuming a low specific gravity maximizes the volume of particles and therefore the impact on DP.**

- **The compaction ratio of the pure fiber bed due to flow through the fiber bed is taken as 0.8. This is a reasonable value, given the low value of the flow passing through the AP1000 recirculation screens.**

- **The compaction ratio of the mixed fiber bed due to flow through the mixed bed is taken as 0.7. As with the pure fiber bed, this is a reasonable value given the low flow passing through the AP1000 recirculation screens.**

~~Assuming~~**Using** a flow velocity of 0.04 ft/sec **and the methods described in Appendix B of Reference 2,** the head loss through a ~~pure~~**mixed** fiber bed on the recirculation screen is ~~taken~~**calculated** to be:

$$\Delta P = 0.585 \text{ psid}$$

A sensitivity calculation was performed to assess the impact of debris having a higher value of specific gravity (a value of 1.5 rather than 1.1). Due to the low approach velocity associated with AP1000 design, this value of specific gravity is taken to be an upper bound for the particulate debris that might be transported to the AP1000 recirculation screens. The results of these calculations are summarized in the table given below.

	Fiber Bed Porosity	Particulate Specific Gravity	Pressure Drop, (psid)
Base Case	0.95	1.1	0.585
Sensitivity Case	0.95	1.5	0.467

The results of the calculation are not unexpected. The mass of the particulate debris applied to the fiber bed on the recirculation screen is taken to be a constant value. Therefore, as the specific gravity of the mass of particulate debris is increased, the volume of that particulate debris mass decreases. The decreased volume of debris fills fewer voids in the fiber bed and, in turn, results in the prediction of a smaller pressure drop across the mixed bed.

The results of the calculations presented here utilize two conservative assumptions regarding particulate debris. First, a conservatively large mass of particulate debris (250 lbm) was assumed. Second, it was assumed that all resident particulate debris inside the AP1000 containment will be applied to the fiber bed on the recirculation screen. These two assumptions work to maximize the calculated pressure drop across the mixed debris bed on the AP1000 recirculation screen.

~~For the thickness of the debris bed calculated, the total pressure drop through a pure fiber debris bed calculated for the AP1000 containment recirculation screen is:~~

$$\cancel{\Delta P_{FIBER} = 0.25\ ft_{H2O} \times 0.69\ inches = 0.18\ ft_{H2O} = 0.075\ psi}$$

~~For the purposes of this evaluation, the following assumptions are made regarding latent containment debris:~~

- ~~50% of the debris mass is fiber, and the remaining 50% is particulate debris, and,~~
- ~~All particulate debris is deposited on the fibrous bed, the particulate-to-fiber mass ratio on the debris bed would be 1 (250 lb of latent fiber debris and 250 lb of latent particulate debris).~~

~~From Figure B-24, "Comparison of NRC Head Loss Experiments Data with the NUREG/CR-6224 Correlation," the pressure drop multiplier for converting the pressure drop for a pure fiber bed to that expected to result from a mixed bed is observed to be a value of 2. Therefore, the expected pressure drop through a mixed fiber / particulate debris bed for the AP1000 containment recirculation screen is evaluated to be:~~

This increase in pressure drop through the recirculation screen is **small**~~insignificant~~ (~205%) compared with the 2.8 psi in these lines during the DCD analysis. Note that the recirculation flow would only have to decrease ~ **10**~~2.5~~% to compensate for this increase in screen DP. **Also note that if best estimate PXS line resistances were assumed, the reduction in PXS flow would decrease from 10% to less than 1%. The potential impact on PXS flow, especially with best estimate line resistances, is insignificant.**

The assumption of a 50 / 50 split between latent fibrous and particulate debris is considered a reasonable engineering judgement. Greater fiber will increase the depth of the fiber bed, but reduce the pressure drop multiplier associated with particulate debris. Lesser amounts of fiber will increase the pressure drop multiplier associated with particulate debris but reduce the fiber bed and the corresponding pressure drop through that bed.

The above calculated increase in pressure drop due to a mixed fiber-particulate is considered conservative for the following reasons:

- The limiting flow case was assumed. That is, only one of the two recirculation screens was taken to be operable due to the assumed break location. This provided for a maximum velocity to and across the operating recirculation screen, also maximizing the potential for debris transport to the operating recirculation screen.

- The total amount of latent containment debris used in the evaluation is considered large. An aggressive foreign materials exclusion program and good housekeeping practices are expected to maintain latent containment debris sources well below the 500 lb level.

- The maximum debris loading on the containment recirculation screen is assumed. No credit is taken for the holdup of latent containment debris elsewhere in the containment (in dead-ended cubicles and rooms, on IRWST screens, etc.)

- A conservatively low density for the latent fibrous debris was assumed. Assuming the latent fibrous debris had a density equal to that of water provided for a maximum volume of fibrous debris, and hence a maximum thickness of the resulting debris bed, on the recirculation screen.

Therefore, it is concluded that the current AP1000 design is not susceptible to loss of natural circulation of coolant from the containment due to recirculation screen blockage resulting from deposition of latent containment debris on the recirculation screen.

References:

1. LA-UR-01-4083, Revision 1, "GSI-191: Parametric Evaluations for Pressurized Water Reactor Circulation Sump Performance," dated August 2001

2. Regulatory Guide 6224, "Parametric Study of the Potential for BWR ECCS Strainer Blockage Due to LOCA Generated Debris," dated August 1994

Design Control Document (DCD) Revision:

None

PRA Revision:

None

AP1000 DESIGN CERTIFICATION REVIEW

Response to Request For Additional Information

RAI Number: 650.006 (Response Revision 1)

Question:

During the NRC staff's review of the AP600, an open item identified as OITS #6590 was generated. Westinghouse responded to this open item in three parts. Please confirm whether or not the second and third parts of the response to OITS #6590 also apply to the AP1000 design. Specifically, (a) would the complete failure of the non-safety-related coatings block any portion of the AP1000 recirculation screens? and (b) is a combined license (COL) action required for the AP1000 that an analysis must be performed of coating debris generation and transport that is based upon appropriate test data?

Additional Question:

What is the basis for using 200 mils as the diameter for postulated coating debris? Experience shows that much smaller flakes are possible, and smaller flakes would tend to settle more slowly than would the larger diameter flakes assumed in the calculation, presenting a potentially greater challenge to the sump screen. When potential resident fiber loadings are considered, flakes significantly smaller in diameter than 200 mils are presumably large enough to become trapped at the interstitial locations of the lattice formed by a fibrous debris bed. Although they presumably represent particles smaller than 200 mils, it is not clear exactly what flake sizes correspond to the bounding settling calculations (i.e., B.E. x 4.3, B.E. x 14), and thus it is not clear what degree of conservatism is being employed when considering the sizes of flakes that can be generated through known failure mechanisms.

Westinghouse Response: < The original response has been revised as shown below to address the additional question. >

The response to AP600 Open Item # 6590 was originally transmitted to the NRC in Westinghouse letter DCP/NRC1251 dated February 10, 1998. The response was later revised in Westinghouse letter DCP/NRC1271 dated February 27, 1998. The RAI above is referring to the original response that was answered in three parts. The revised response to OITS #6590 was answered in four parts. The following response to items (a) and (b) above reflect the revised response to OITS#6590:

(a) In DCP/NRC1271, results of calculations are presented that demonstrate that failure of nonsafety-related coatings inside containment would not block any portion of the AP600 containment recirculation screens. That response has been updated for AP1000 and is presented below.

The AP1000 has several unique characteristics that allow the plant to tolerate the failure of nonsafety-related coating used inside containment. Table 650.006-1 attached to this response provides a list of these characteristics. These characteristics include long settling times between the end of RCS blowdown during a LOCA and the beginning of recirculation; the large water volumes provided by the passive core cooling system (PXS) and the shape of the containment lower volumes provides for high flood-up levels. These high flood-up levels allow the containment recirculation screens to be located relatively high. The bottoms of the screens are located well above the lowest elevations of the containment and this allows coating debris to settle out without challenging the bottom of the screens. The screens are very tall, which further reduces the chance that coating debris can reach the screens. The AP1000 screens also have a unique feature (protective screen plates) that have been added to specifically prevent coating debris from entering the post accident containment water close to the screens and potentially blocking the screens. These screen plates are located above each recirculation screen and extend well out in front and to the sides of the screens.

Another AP1000 characteristic that reduces the potential for coating debris blocking the recirculation screens is that fibrous insulation is not used where it may be damaged by a LOCA. This eliminates the potential adverse interaction where fibrous debris acts like a fine filter and collects small particles of dust or coating debris and leads to high screen pressure drops.

As discussed in the AP1000 DCD section 6.1.3.2, the nonsafety-related (service level II) coating material used in the containment will be procured with 10 CFR Part 50, Appendix B quality assurance requirements. As a result, the nonsafety-related coatings are not expected to fail. However, to provide a robust design, the failure of the nonsafety-related coatings is considered.

The application of 10 CFR Part 50, Appendix B quality assurance to the manufacture and procurement of nonsafety-related coating materials allows the characteristics of the paint to be identified in terms of density and failure mechanisms. This information makes it possible to bound the size and density of the debris that might be generated by failure of these coatings and have the potential for blocking the screens. Table 650.006-2 shows the key inputs used in evaluating the coating settling.

Figures 650.006-1 and -2 show the settling trajectories of coating debris starting at the edge of the protective plate. Figure 650.006-1 shows the approach from the front of the screen and figure 650.006-2 shows the approach from the side. Such debris can not enter the water any closer to the screens because no coatings are permitted any closer to the screens. The figure shows that with design settling rates the debris will settle to the elevation of the bottom of the screen after drifting about 6 feet, which is at about 4 feet away from the screen. Significant conservatism was included in this evaluation, including assuming the lightest/smallest coating debris. **The minimum debris size was selected as a disc 200 mils in diameter and 5 mils thick. The 200 mils was selected as the smallest size that**

could be trapped by the screen; smaller particles would pass through the screen as well as the fuel assemblies. With consideration for resident fibers, it would be possible for smaller particles to be trapped in a layer of fibers that might deposit on the screen. The possible impact of smaller coating debris particles on the settling rates is more than compensated by the following effects:

- **As the particles become smaller in diameter, the ratio of diameter to thickness decreases, which will reduce the "flutter" effect that slows the settling of thin discs.**
- **The large protective plate over the screens can tolerate extremely poor settling rates (much slower than the expected rate) and still protect enough of the screen to support PXS operation.**

It also assumes the maximum recirculation flow of 1600 gpm, consistent with the maximum flow from two RNS pump operating unthrottled with suction taken from two screens. Another area where significant margin has been applied is in the debris settling rates. AP1000 uses debris settling rates that contain a factor of two margin compared to the reference settling data (Reference 1) which is sufficient to account for uncertainties. Without this added margin, the coating debris settles out very quickly in less than 3 feet, as shown in Figure 650.006-1 and -2.

Several sensitivity studies have been performed to demonstrate the robustness of the AP1000 design with respect to uncertainty in coating debris settling. The margin applied to settling rates was increased from the AP1000 design value of a factor of 2 to a factor of 4.3 until the debris would block 50% of the screen and to a factor of 14 before debris could block 90% of the screen. Note that the potential screen blockage is based on averaging the results from Figures 650.006-1 and -2. Even with such extreme margins, the recirculation would continue to function because the recirculation screen can tolerate significant blockage and still support recirculation operation. Note that if screen blockage ever reached the point where the RNS pumps cavitated and stopped operating, the PXS would revert to gravity recirculation at its lower flow rate (< 1330 gpm).

The debris settling shown in figures 650.006-1 and -2 provide confidence that the plant can sustain complete failure of the nonsafety-related coatings located inside containment without excessive blockage of the recirculation screens.

(b) In DCP/NRC1271, Westinghouse transmitted the revised response to OITS#6590. The revised response replaced the previous commitment for the combined license applicant (COL) to perform an analysis of coating debris generation and transport based upon appropriate test data with an ITAAC commitment to verify that the nonsafety-related coatings used in the AP600 inside containment were consistent with the coating debris assumptions used in the calculations described in Part (a) of this response. This ITAAC commitment has been retained for the AP1000, and is included in AP1000 Tier 1 Information, Section 2.2.3, Item 8.c) (x) in Table 2.2.3-4.

AP1000 DESIGN CERTIFICATION REVIEW

Response to Request For Additional Information

Reference:

1. Gibbs and Hill Report, "Evaluation of Paint and Insulation Debris Effects on Containment Emergency Sump Performance", Revision 1, September 1994.

Design Control Document (DCD) Revision:

None

PRA Revision:

None

Table 650.006-1
AP1000 Post LOCA Recirculation Conditions

Time of Initiation of Recirculation		
- Large LOCA	~ 5 hr	
- DE DVI LOCA	~ 5 hr	
Flood up level (water level)		
- above RV cavity floor	36.5 ft	
- above loop compartment floor	25 ft	
Screen elevation	Corridor	Loop
- Protective plate above top screen	< 1 ft	< 1 ft
- Height screen	13 ft	10.2 ft
- Bottom screen above nearby floor	2 ft	2 ft
- Bottom screen above RV cavity floor	15 ft	12.2 ft
Containment Recirculation flow rates		
- Maximum total (no failures, all pumps, both screens)	2600 gpm	
- Expected total (no failures, all pumps, both screens)	2000 gpm	
- Maximum per screen (RNS, all pumps, both screens) (1)	1600 gpm	
- Maximum per screen (PXS, no failure, one screen)	1330 gpm	

Notes:
(1) Adds arbitrary margin to case shown with both RNS pumps and both screens.

Table 650.006-2
Inputs to Coating Debris Settling Calculation

Coating debris:	
- Shape	circular disk
- Diameter	≥ 200 mils
- Thickness	≥ 5 mils
- Density	≥ 100 lb/ft3
Containment Recirculation Screen geometry: (1)	
- Height	13 feet
- Width	5.5 feet
- Distance off floor	2 feet
Screen Protective plate:	
- Height above top screen	1 feet (2)
- Distance plate extends out in front	10 feet
- Distance plate extends out to side	7 feet
Screen flow rate:	
- Maximum flow per screen	1600 gpm (3)

Notes:

(1) The screen located in the corridor is used in this study because it is more limiting than the screen in the loop compartment; it is more limiting because it is taller than the screen in the loop compartment and it has the same plate dimensions.

(2) The AP1000 has an ITAAC limit of 1 foot. The actual design is 0 feet.

(3) The maximum flow per screen is based on operation of the RNS following ADS operation; PXS operation results in lower screen flows (< 1330 gpm). The following conservative assumptions are made in calculating the maximum RNS pump driven flow rates. Two RNS pumps are assumed to take suction from two recirculation screens. The RCS pressure is assumed to be equal to the containment pressure. The RNS pump is assumed to have a conservatively high head vs flow characteristics. Cavitation of the pump due to inadequate NPSHa is conservatively ignored. The piping and equipment flow resistances are assumed to be low.

Figure 650.006-1 AP1000 Coating Debris Settling (Front)

This figure shows that the AP1000 has significant margin to accommodate uncertainty in coating settling rates. This figure shows the approach to the front of the containment recirc screen located in the corridor. Sensitivity of coating settling to debris settling rates is shown. The heavy solid line shows the AP1000 design case, which includes a margin factor of 2.00 times the reference settling data (Reference 1). Lighter lines represent sensitivity studies with greater margins. The margins applied were chosen to force the debris to settle out covering half of the screen (factor of 4.3) and covering 90% of the screen (factor of 14). Even with 90% of the screen completely blocked, either the RNS or the PXS would still be able to provide core cooling. A light line shows the settling using the reference settling data. Note that the potential screen blockage is assumed to be an average of figure 650.006-1 and -2. All of these cases assume a conservatively high flow which bounds the maximum RNS flow possible assuming both RNS pumps take suction from two screens and is unthrottled (1600 gpm/screen).

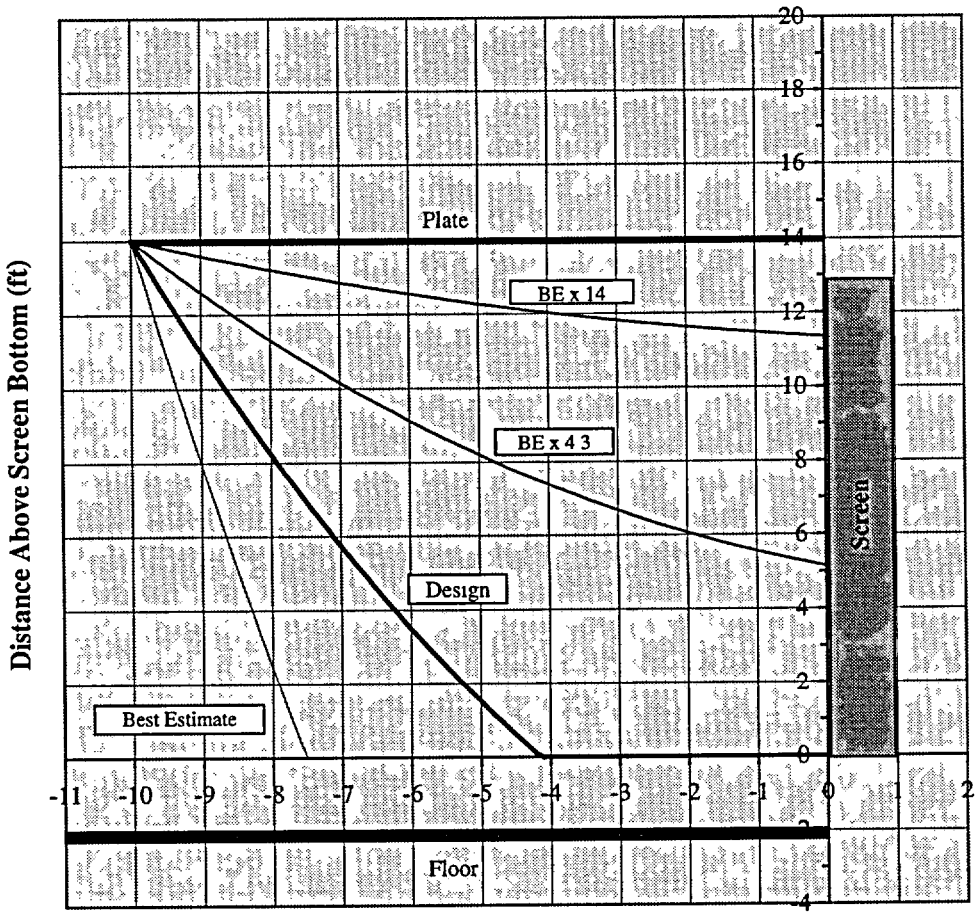

Figure 650.006-2 AP1000 Coating Debris Settling (Side)
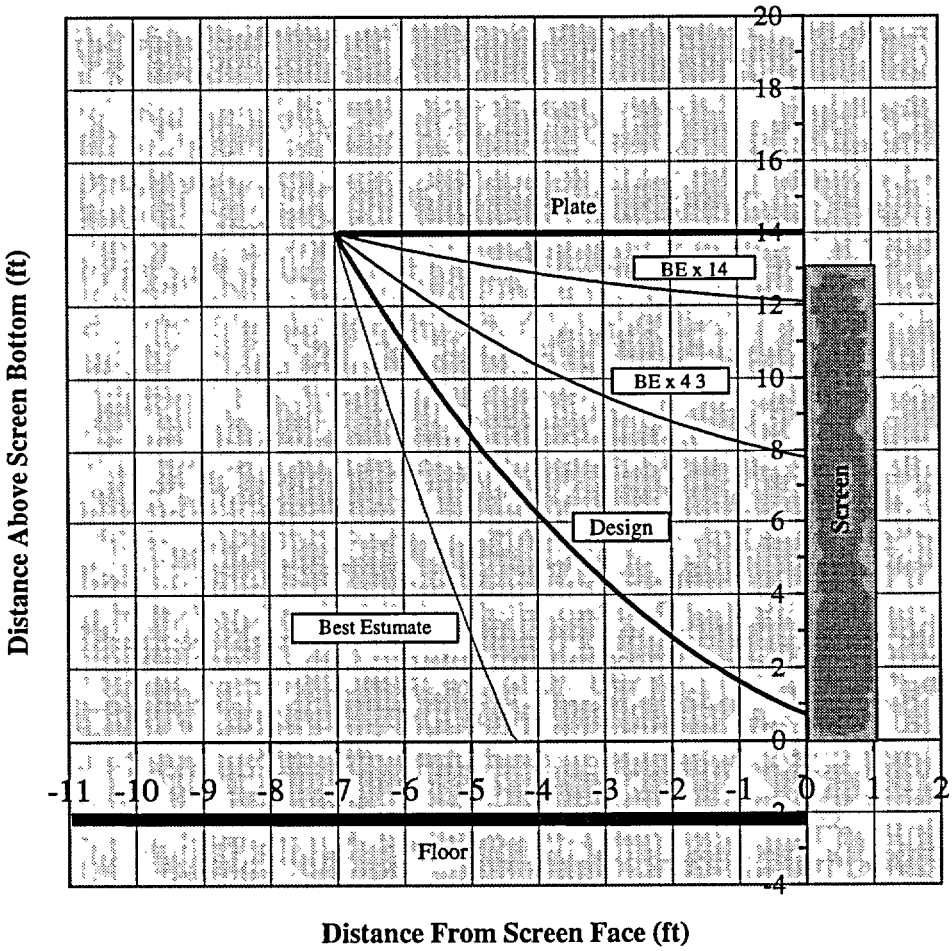
This figure shows that the AP1000 has significant margin to accommodate uncertainty in coating settling rates. This figure shows the approach to the side of the containment recirc screen located in the corridor. Sensitivity of coating settling to debris settling rates is shown. The heavy solid line shows the AP1000 design case, which includes a margin factor of 2.00 times the reference settling data (Reference 1). Lighter lines represent sensitivity studies with greater margins. The margins applied were chosen to force the debris to settle out covering half of the screen (factor of 4.3) and covering 90% of the screen (factor of 14). Even with 90% of the screen completely blocked, either the RNS or the PXS would still be able to provide core cooling. A light line shows the settling using the reference settling data. Note that the potential screen blockage is assumed to be an average of figure 650.006-1 and -2. All of these cases assume a conservatively high flow which bounds the maximum RNS flow possible assuming both RNS pumps take suction from two screens and is unthrottled (1600 gpm/screen).