Advisory Committee on Reactor Safeguards Update of the Davis-Besse Nuclear Power Station Reactor Pressure Vessel Closure Head Activities

June 6, 2002

FENOC
Davis-Besse Nuclear Power Station

Agenda

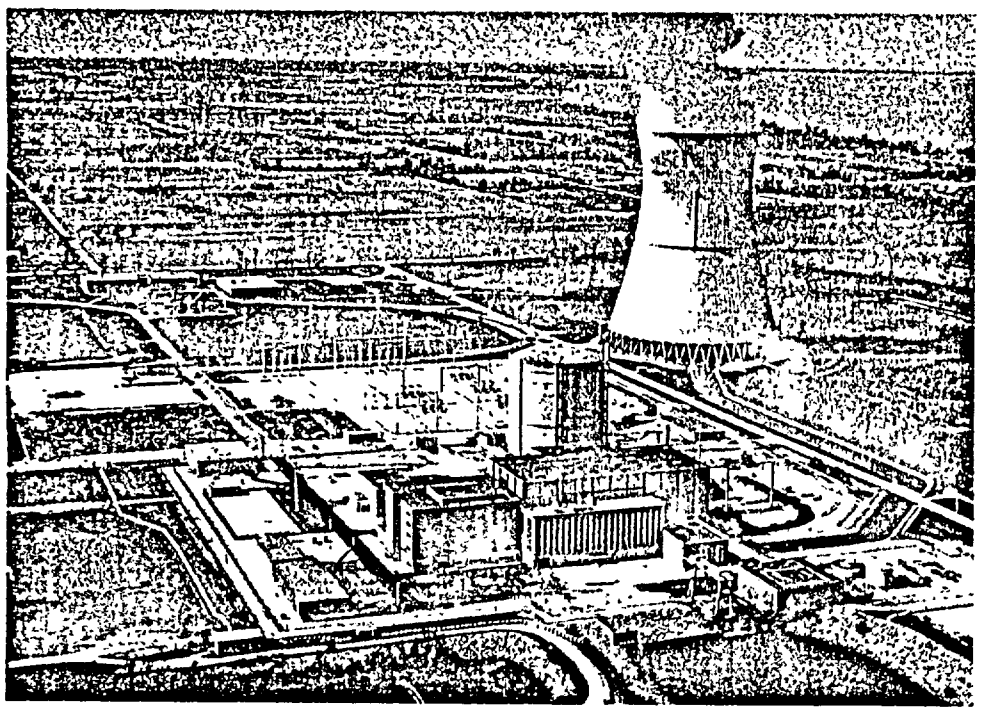

Introduction
- Jim Powers

Update of RPV Closure Head Field Activities
- Mark McLaughlin

RPV Closure Head Replacement
- Bob Schrauder

Root Cause Analysis
- Steve Loehlein

Concluding Remarks
- Jim Powers

Update of RPV Closure Head Field Activities

Mark McLaughlin
Field Activities Team Leader

Abrasive Water Jet

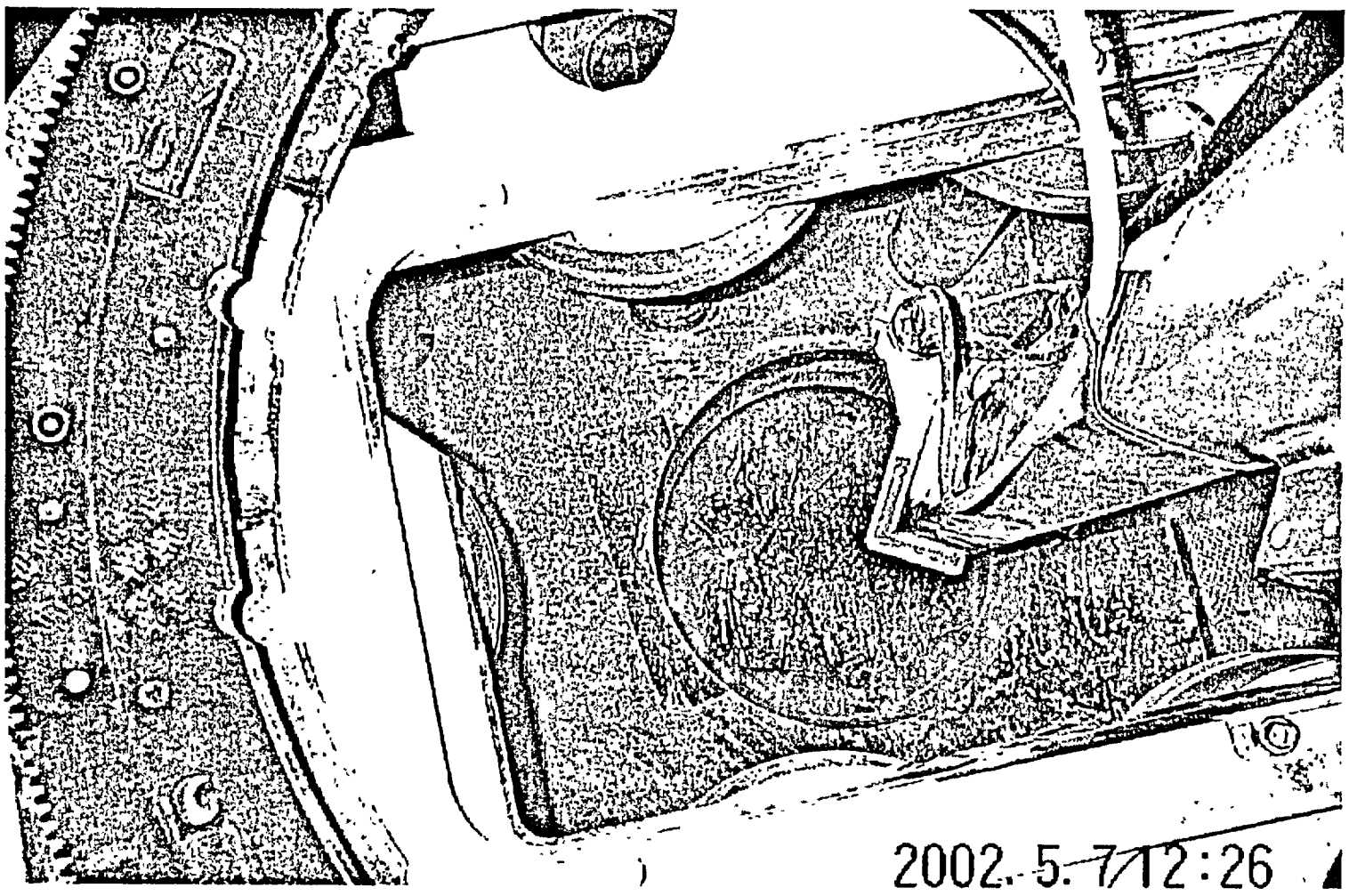

2002 5 7 12:26

Area Removed from RPV Closure Head

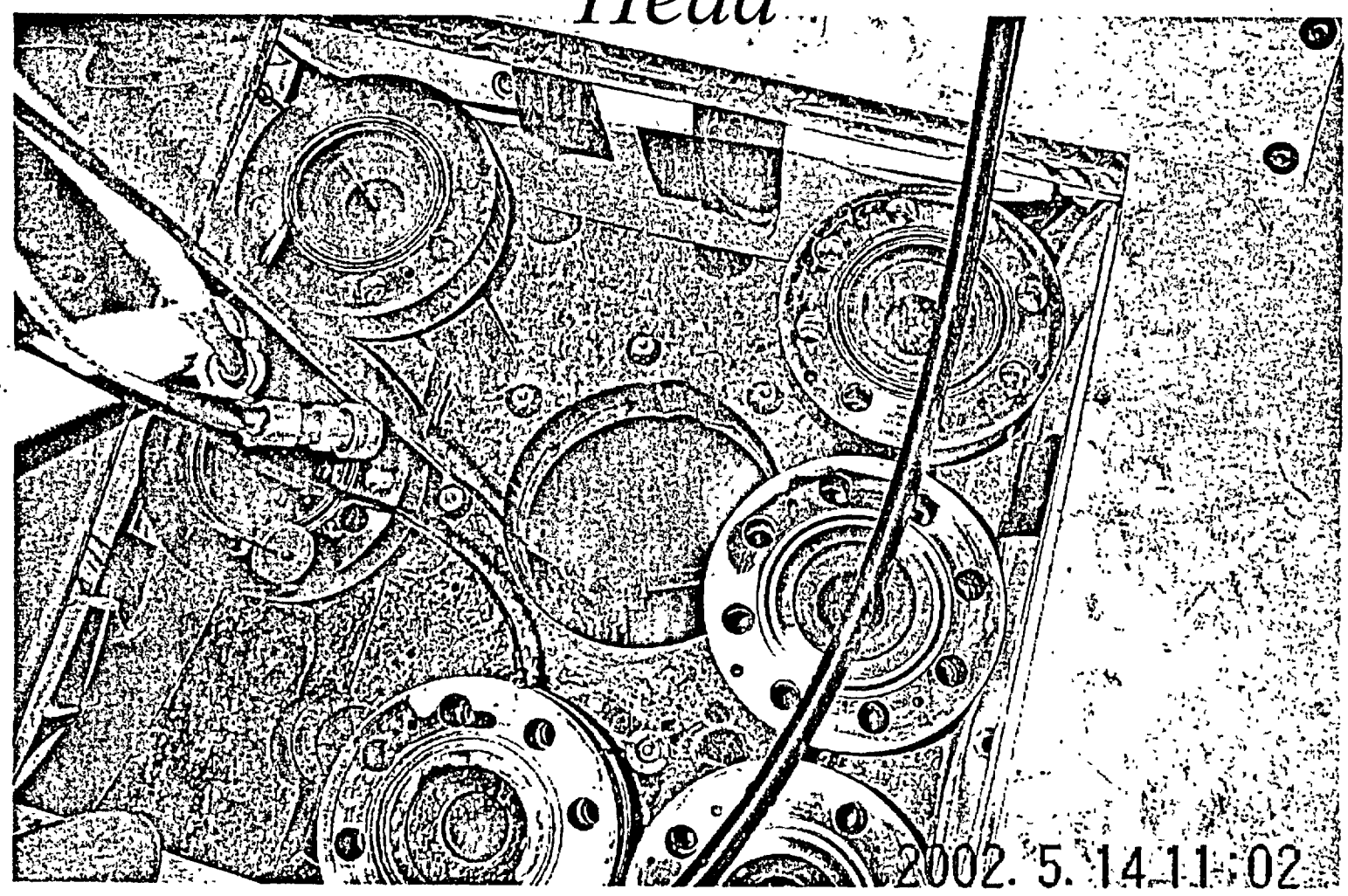

Underneath RPV Closure Head

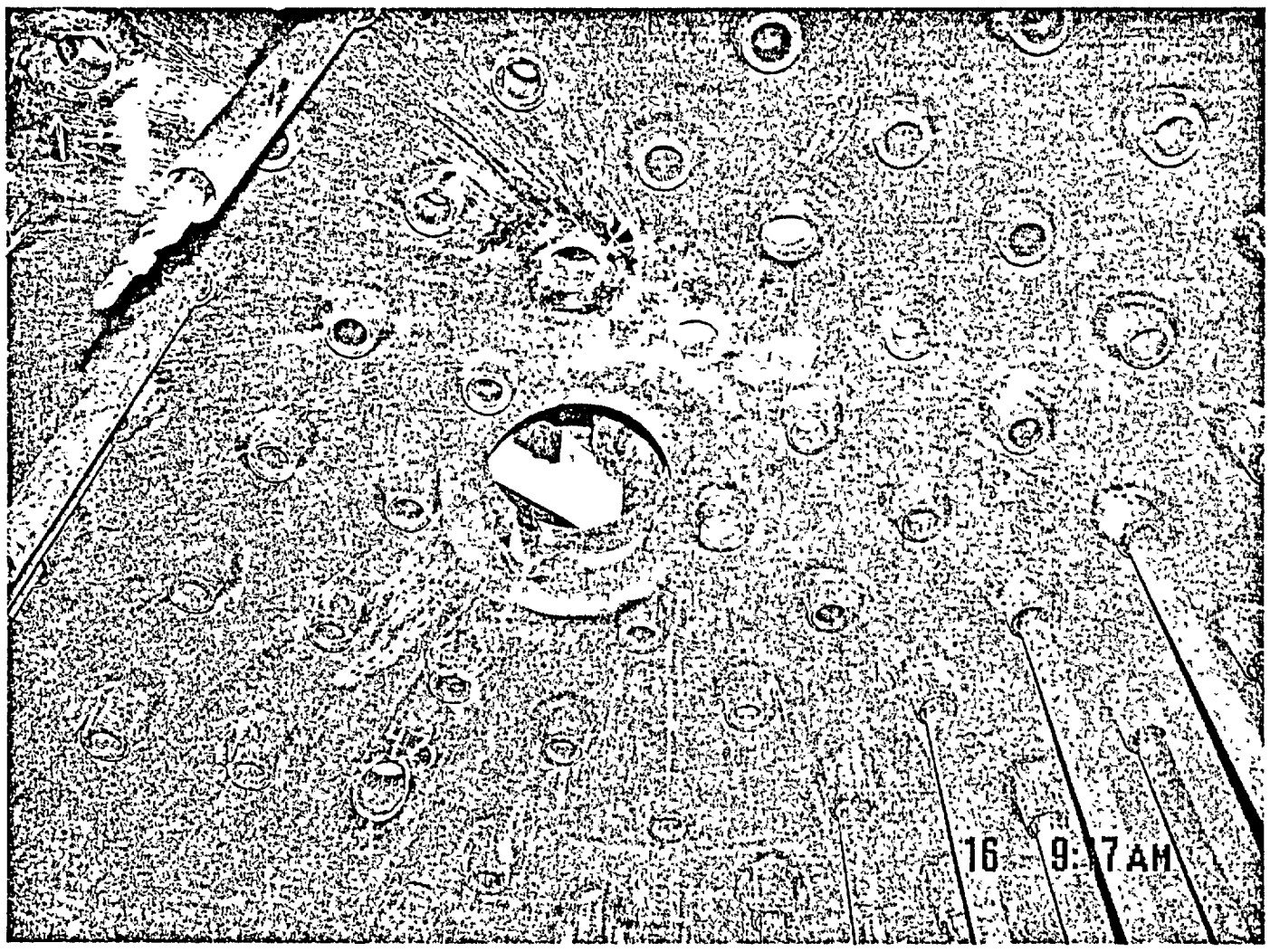

RPV Closure Head Cutout

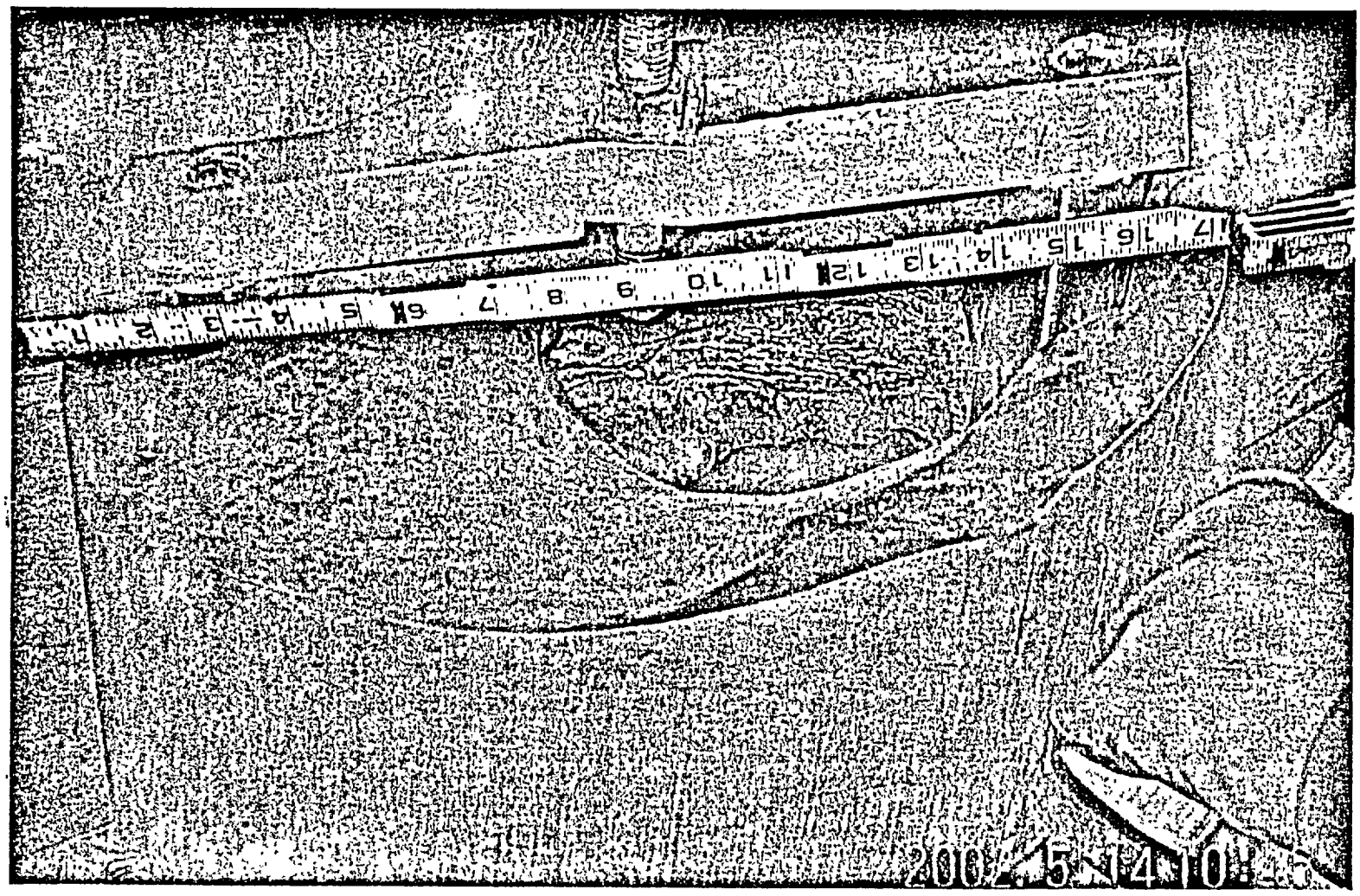

Sample Plan

- Phase 1
  - Corrosion products/boric acid deposits from top of head
  - Deposits scraped from CRD nozzle 3 below the flange
  - Draft report issued for Davis-Besse review
- Phase 2
  - Corrosion products/boric acid deposits from nozzle 2 removal
- Phase 3
  - Nozzle 3 and nozzle 3 corrosion area
  - Nozzle 2

RPV Closure Head Cutout

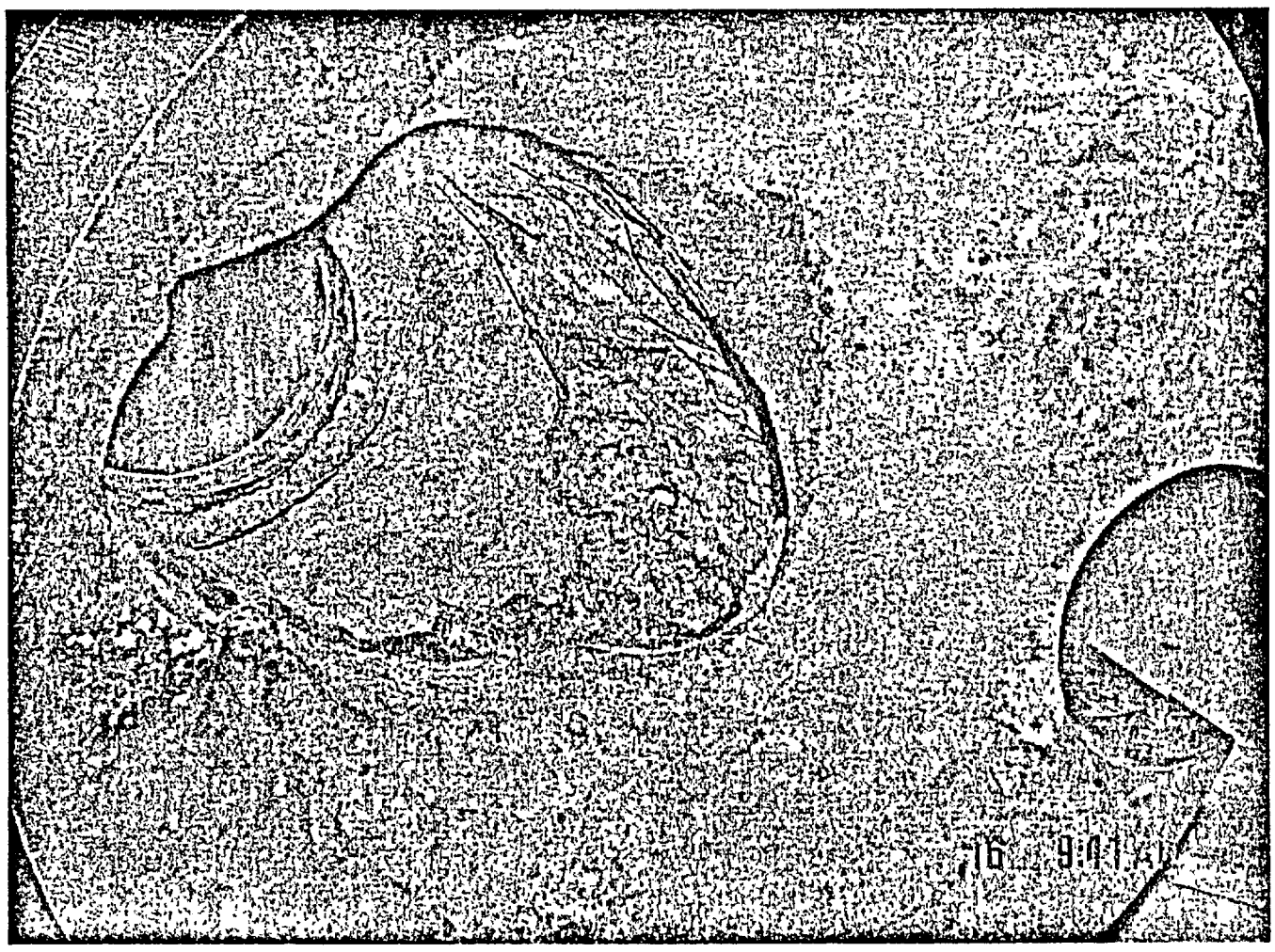

Nozzle 3 Cutout Cladding Interface

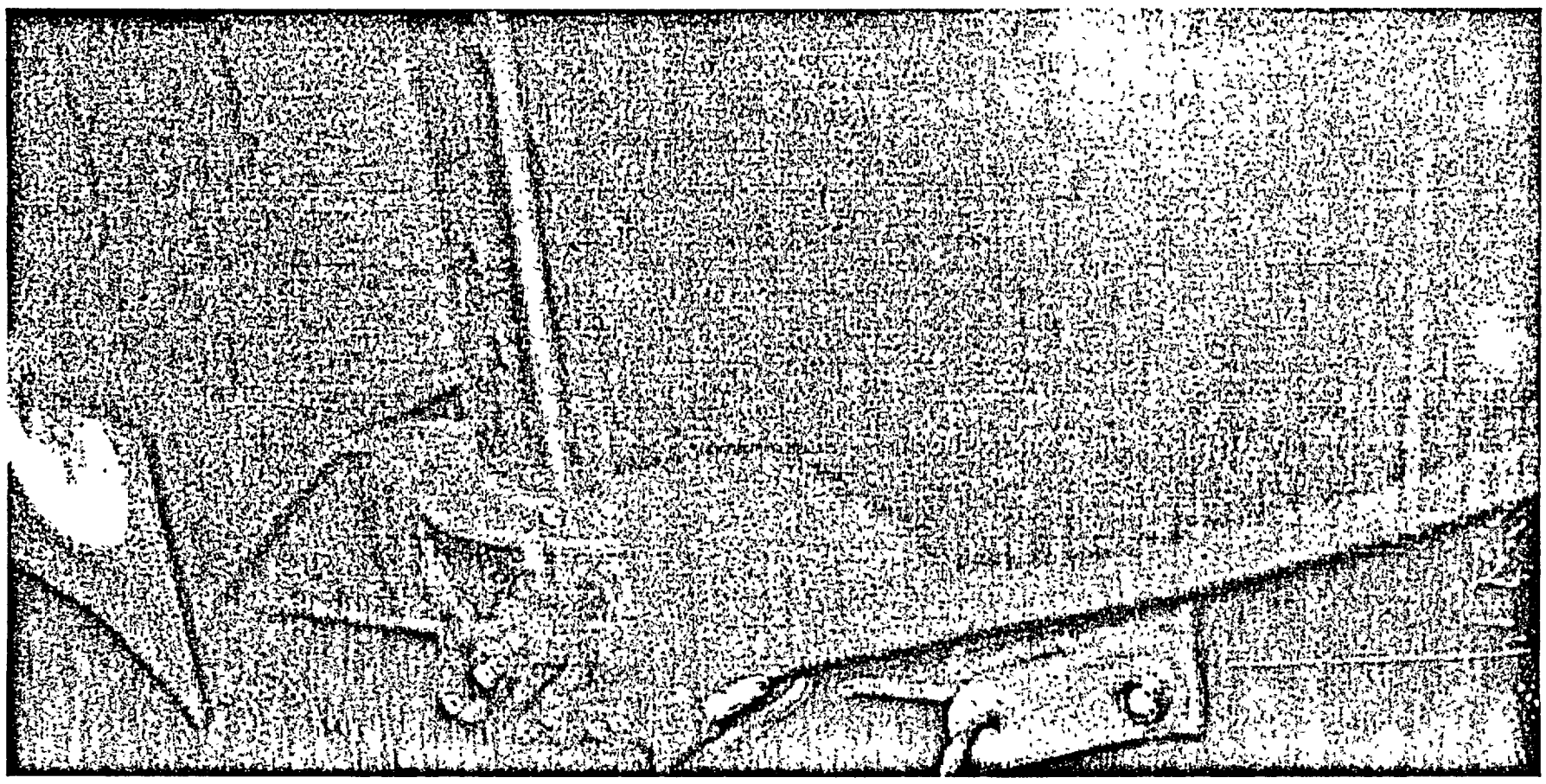

Reactor Pressure Vessel Closure Head (RVPCH) Replacement

Bob Schrauder
Engineering Services

RPVCH Replacement Considerations

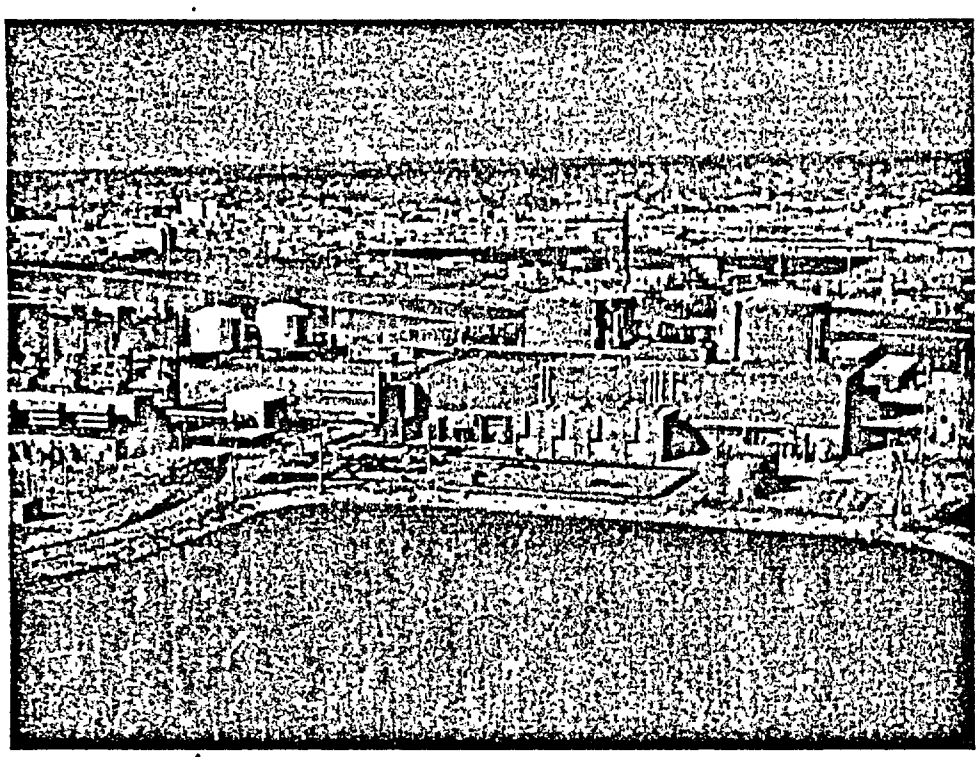

- The Midland RPVCH is
  - Similar in design to the Davis-Besse RPVCH
  - Readily available
  - Not contaminated

Replacement RPVCH

- Midland RPVCH was fabricated by Babcock and Wilcox
  - Manufactured to ASME Boiler & Pressure Vessel Code Section III, Code Class A, 1968 Edition, Summer 1968 Addenda
  - Accepted by Consumers Power and an Authorized Nuclear Inspector as an acceptable ASME component
  - Hydrostatically tested at 3125 psig per ASME Code Requirements

Replacement RPVCH

- Framatome-Advanced Nuclear Power (FRA-ANP) has purchased Midland RPVCH and is compiling/validating the ASME Code Data Package
- FRA-ANP is reconciling the Midland RPVCH against Davis-Besse design requirements
- FRA-ANP activities are governed by their safety-related Quality Assurance program, including 10CFR21 reporting

Replacement RPVCH Comparison to Davis-Besse RPVCH

	Davis-Besse	Midland
Material of Construction		
Closure Head	SA-533, GR B Cl 1	Same
Closure Head Flange	SA-508, Cl 2	SA-508-64, Cl 2
CRDM Nozzle	Inconel SB-167	Same
CRDM Flange	SA-182, F-304	Same
Design		
Pressure	2500 psig	Same
Temperature	650 degree F	Same

Replacement RPVCH CRD Nozzles

- Midland's Control Rod Drive (CRD) nozzles are similar to Davis-Besse
  - 68 Nozzles: Material Heat M7929
  - 1 Nozzle: Material Heat M6623
- Alignment of control rods to RPVCH nozzles is consistent with original Davis-Besse design

Replacement RPVCH

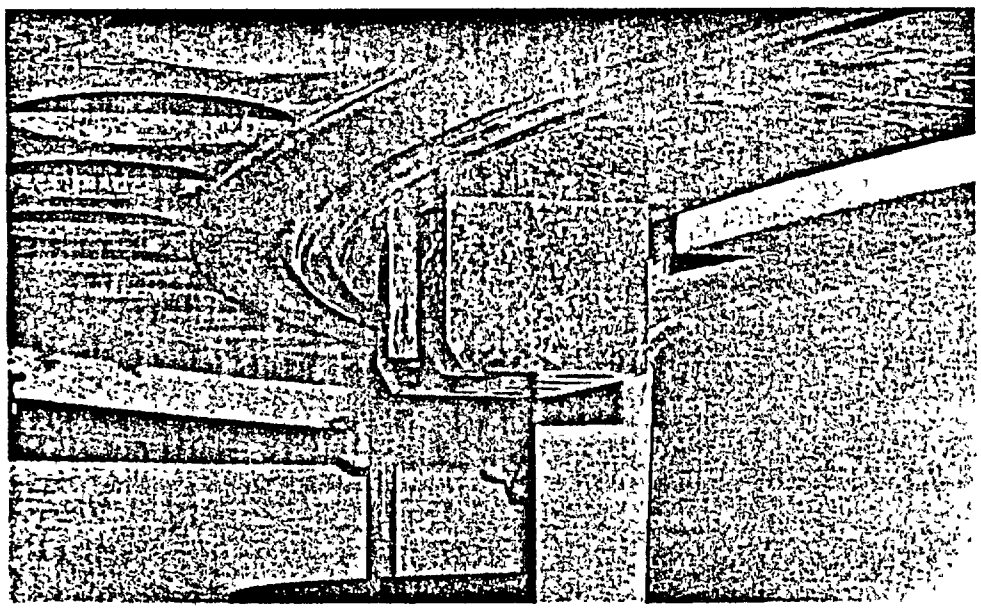

- Minor machining of 4 out of 8 vessel-to-head key-way surfaces is required
- The Midland CRDM flange indexing pin hole locations will be modified to match the proper Davis-Besse azimuth-orientation

Replacement RPVCH

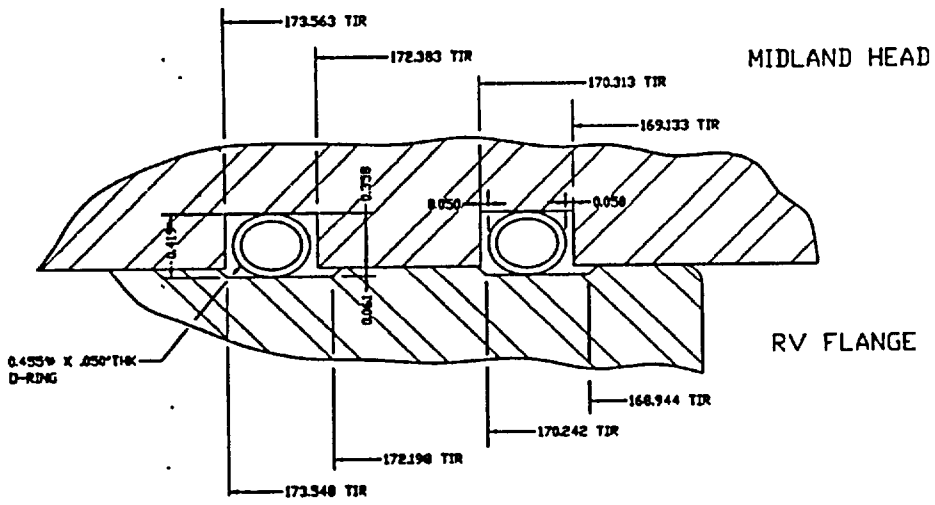

- Minor differences in RPVCH O-ring design
  - O-ring grooves are slightly different requiring the use of smaller diameter O-rings (0.455 in. vs 0.500 in.)
  - New O-rings will be installed

Examinations of Replacement RPVCH

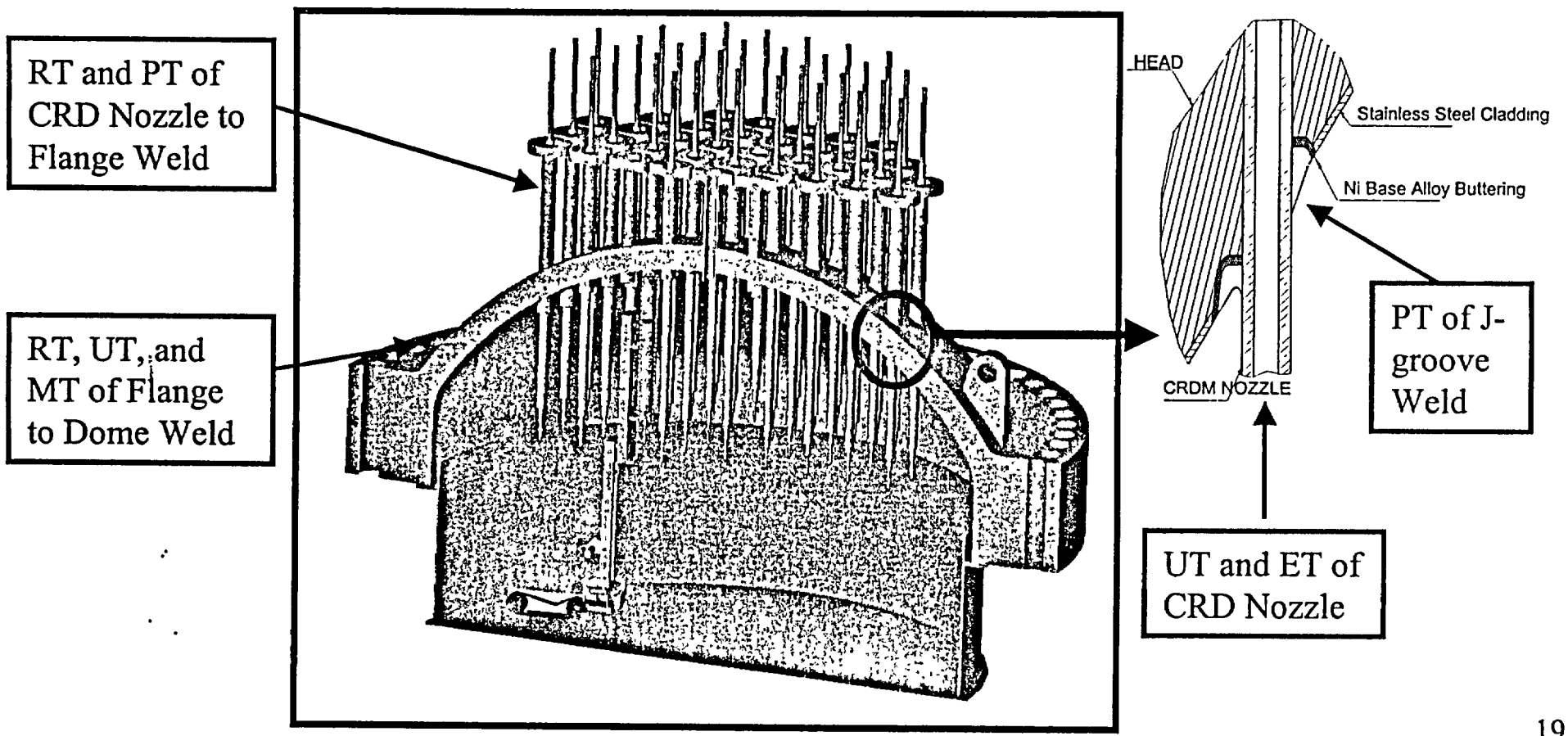

Examinations of Replacement RPVCH

- Examinations to supplement ASME Code Data Package:
  - Visual examinations
  - Radiography (RT) of flange-to-dome weld
    - Lifting attachments prevented full coverage
  - RT of nozzle-to-flange welds
  - PT examination of the CRDM nozzle J-groove welds

Examinations of Replacement RPVCH

- Preservice Inspections
  - Magnetic Particle (MT) examination of flange-to-dome weld
  - Ultrasonic (UT) examination of flange-to-dome weld
  - Liquid Penetrant (PT) examination of peripheral CRDM nozzle-to-flange welds

Examinations of Replacement RPVCH

- Additional Non-Destructive Examinations
  - Chemical smears
  - Baseline UT of CRD nozzles
  - Eddy Current Testing (ET) of CRD nozzles

Installation of the Replacement RPVCH at Davis-Besse

- Davis-Besse Containment Building will require temporary access opening
- Original RPVCH will be moved outside Containment Building for storage and/or disposal
- Davis-Besse Service Structure will be used
- Inspection ports will be installed on replacement support skirt

Installation of the Replacement RPVCH at Davis-Besse (continued)

- Original Davis-Besse control rod location and core configuration will be used
  - Existing CRD Mechanisms will be used
  - CRD Mechanisms nozzle flange split nut ring modification will be performed
  - Upgraded gasket design will be incorporated

Root Cause Investigation

Steve Loehlein
Root Cause Investigation Team Leader

Key Questions

- Was there a new mechanism that caused this degradation?
- Was there adequate guidance/knowledge available to have prevented the degradation to the RPV closure head?

Key Conclusions

- The degradation to the RPV closure head was caused by Primary Water Stress Corrosion Cracking (PWSCC) of the Control Rod Drive (CRD) nozzle which led to leaks that were undetected allowing boric acid corrosion to occur
- The existing guidance/knowledge was adequate for preventing unacceptable RPV closure head degradation from CRD nozzle leaks

Timeline of Key Events

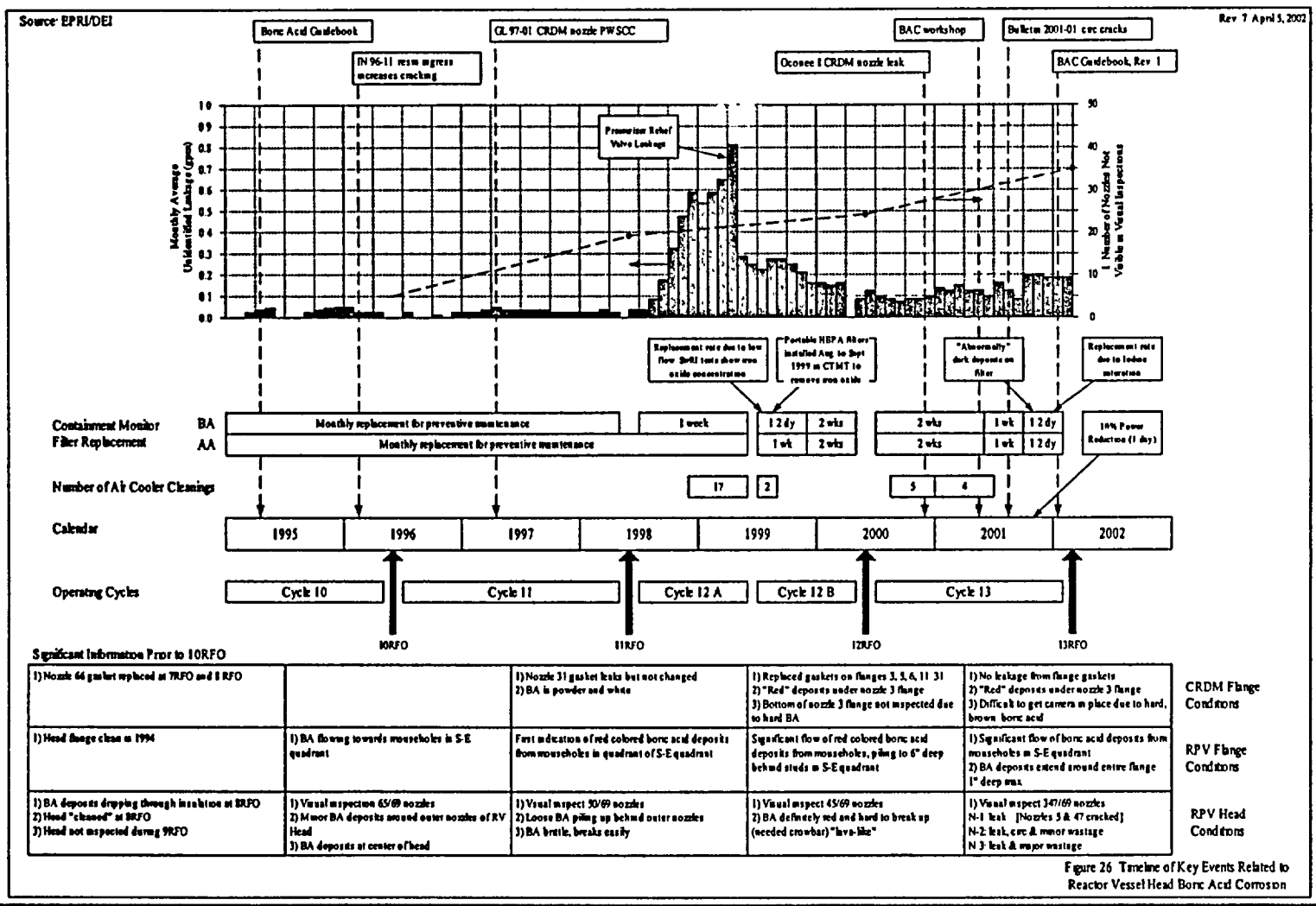

Significant Information Prior to 10RFO

1) Nozzle 66 gasket replaced at 7RFO and 8 RFO		1) Nozzle 31 gasket leaks but not changed 2) BA is powder and white	1) Replaced gaskets on flanges 3, 5, 6, 11 31 2) "Red" deposits under nozzle 3 flange 3) Bottom of nozzle 3 flange not inspected due to hard BA	1) No leakage from flange gaskets 2) "Red" deposits under nozzle 3 flange 3) Difficult to get camera in place due to hard, brown boric acid	CRDM Flange Conditions
1) Head flange clean in 1994	1) BA flowing towards mouseholes in S-E quadrant	First indication of red colored boric acid deposits from mouseholes in quadrant of S-E quadrant	Significant flow of red colored boric acid deposits from mouseholes, piling to 6" deep behind studs in S-E quadrant	1) Significant flow of boric acid deposits from mouseholes in S-E quadrant 2) BA deposits extend around entire flange 1" deep max	RPV Flange Conditions
1) BA deposits dripping through insulation at 8RFO 2) Head "cleaned" at 8RFO 3) Head not inspected during 9RFO	1) Visual inspection 65/69 nozzles 2) Minor BA deposits around outer nozzles of RV Head 3) BA deposits at center of head	1) Visual inspect 50/69 nozzles 2) Loose BA piling up behind outer nozzles 3) BA brittle, breaks easily	1) Visual inspect 45/69 nozzles 2) BA definitely red and hard to break up (needed crowbar) "lava-like"	1) Visual inspect 347/69 nozzles N-1 leak [Nozzles 5 & 47 cracked] N-2 leak, circ & minor wastage N-3 leak & major wastage	RPV Head Conditions

Figure 26 Timeline of Key Events Related to Reactor Vessel Head Boric Acid Corrosion