CHAPTER 54

LOW-POWER AND SHUTDOWN RISK ASSESSMENT

54.1 Introduction

This section provides an assessment of the risk to the AP1000 during low-power and shutdown conditions. In the AP600 PRA, an evaluation of the risk associated with low-power and shutdown conditions was provided in Chapter 54 of the AP600 PRA. The AP600 shutdown PRA provided the basis for this AP1000 shutdown PRA assessment.

The evaluation, which covers shutdown and low-power operation, encompasses operation when the reactor is in a subcritical state or is in transition between subcriticality and power operation up to 5 percent of rated power. The evaluation addresses conditions for which there is fuel in the reactor vessel and includes aspects of nuclear steam supply, the containment, and all systems that support the nuclear steam supply and containment. However, the evaluation does not address events involving fuel handling outside of the containment and fuel storage in the fuel storage building.

The AP600 shutdown PRA was performed in accordance with the requirements outlined in the EPRI ALWR Utility Requirements Document, which specified that a simplified assessment of the risk of the plant should be performed for shutdown conditions. In addition to the initial AP600 shutdown PRA provided in Chapter 54, three additional shutdown PRA assessments were performed and submitted to the NRC as Attachments A, B and C to Chapter 54. These attachments addressed design changes incorporated in the AP600 subsequent to the shutdown PRA, as well as changes in PRA modeling which resulted from NRC questions concerning shutdown phenomena such as surge line flooding.

The results of the AP600 shutdown PRA quantification of the core damage frequency and large early release frequency from internal events that can occur during shutdown modes, (including the three attachments described above) were reported as follows:

Core damage frequency from events at shutdown:	1.04 E-07 per year
Large early release frequency from events at shutdown:	1.5 E-08 per year

These results demonstrate that the risk to the AP600 plant during shutdown was very low. The AP1000 design is based extensively on the AP600. Moreover, the AP1000 systems and equipment designed to protect the plant during shutdown modes have the same configuration as those of the AP600. Appendix E of Chapter 19 provides a description of the AP1000 systems and equipment that are designed to function during shutdown modes.

The AP1000 shutdown PRA is based on the results of the AP600 Level 1 shutdown PRA, in that the cutset results of the AP600 shutdown PRA are used as the starting point for making the necessary changes to reflect the AP1000 design and operating cycle. Similar to the AP600 PRA documentation, in the AP1000 shutdown PRA report, the events during hot/cold shutdown conditions are grouped and referred to as non-drained events, and events during drain down of the RCS and when the plant is at mid-loop are referred to as drained events.

The AP1000 shutdown PRA model is created by incorporating the changes reflected in Attachments A, B and C to the AP600 PRA Chapter 54, and making any additional modifications to the PRA model necessary to reflect the AP1000. The two most significant modeling changes incorporated for AP1000 are:

- Modification to the initiating event frequencies to reflect an 18-month refueling cycle for AP1000 versus the 24-month refueling cycle assumed for the AP600

- Modification to the modeling of the passive residual heat removal system (PRHR) to require operation of the containment gutter isolation valves to change position to assure PRHR success. The AP1000 shutdown PRA has assumed that the success of the PRHR is dependent on the gutter isolation valves closing, thus re-directing condensate from the steel containment shell to the in-containment refueling water storage tank (IRWST), and thus providing the heat sink for the PRHR heat exchanger. As the gutter isolation valves are air-operated, as are the PRHR isolation valves, the major impact of this modeling change was accounted for in the AP1000 shutdown model by doubling the common-cause failure probability of the air-operated valves used in the AP600 model. This modeling change was also incorporated in the AP1000 at-power PRA model.

54.2 Data Analysis

There are no fault trees developed specifically for the AP1000 shutdown model. The data used in the AP600 shutdown model (i.e., the cutset results) are used in the AP1000 shutdown evaluation, with the exception of the revised initiating event frequencies and common-cause failure probability of the PRHR system air-operated valves.

The data used in developing the initiating event frequencies for the AP1000 Level 1 shutdown evaluation is discussed in this section. This data is based on the maintenance frequencies calculated for the AP600 shutdown PRA and the 18-month refueling cycle for the AP1000.

The yearly frequencies of the AP1000 plant in hot/cold shutdown conditions and drained conditions are as follows:

- Non-drained maintenance frequency – 1.8 events per year
- Drained maintenance frequency – 0.38 events per year
- Refueling outage frequency – 0.69 events per year

The refueling outage frequency is estimated by taking the product of the controlled shutdown frequency (1.8) and the percentage of controlled shutdowns that takes the plant to refueling mode (1%), summed with the refueling cycle frequency (0.67). Thus, the AP1000 refueling outage frequency is: $0.67 + (1.8 \times 0.01) = 0.69$ events per year.

From these frequencies, the yearly frequencies of the AP1000 in hot/cold and mid-loop conditions are estimated as follows:

- Yearly frequency of AP1000 in hot/cold shutdown condition: $1.8 + 0.38 + 0.69 = 2.87$
- Yearly frequency of AP1000 in mid-loop condition: $0.38 + 0.69 = 1.07$.

54.3 Initiating Event Analysis

Based on these yearly frequencies of the AP1000 plant in non-drained and drained shutdown conditions, the calculated initiating event frequencies for events during these conditions are shown in Table 54-1.

54.4 Event Tree/Mitigation System Evaluation

The accident sequences for the AP1000 shutdown model are based on the event trees used in the AP600 model. The accident sequences for events during non-drained conditions and during drained conditions are presented in Figures 54-1 through 54-10.

The various mitigation systems credited in the shutdown accident sequences of the AP600 plant are also applied to the AP1000 model. Several system or modeling changes are required for the AP1000. These system and modeling changes are evaluated in Table 54-2 to assess their effects on the AP1000 shutdown model.

Endstates: The sequences in the event trees in Figures 54-1 through 54-10 lead to endstates "OK," "LP-ADS," "LP-3D," "LP-3BE," "LP-3BL," and 'LP-CBP". These low power event endstates are described as follows:

OK	Sequence does NOT lead to core damage
LP-ADS	Sequence leads to core damage; RCS is not fully depressurized to permit gravity injection
LP-3D	Sequence leads to core damage; RCS depressurization is partially failed to not permit gravity injection
LP-3BE	Sequence leads to core damage; RCS is fully depressurized with failure of gravity injection prior to core damage
LP-3BL	Sequence leads to core damage; RCS is fully depressurized, gravity injection succeeds, but containment sump recirculation fails prior to core damage
LP-CBP	Sequence leads to containment bypass event.

54.5 Common Cause Analysis Update for AP1000

The common-cause events that are modified or clarified in creating the AP1000 shutdown model are discussed in this section. The other common-cause failures (CCFs) are assumed to be the same for the AP600 and AP1000 plants.

IWX-MV-GO1/IWX-EV-SA: In the early versions of the AP600 shutdown PRA, the basic event IWX-MV-GO1 was used to model "CCF of 4 of 4 IRWST injection motor-operated valves (MOVs) to open" with a failure probability of 5.5E-04. In Attachments A, B and C to the AP600 shutdown PRA, later analyses were performed to evaluate the design changes following the initial shutdown PRA. One such sensitivity was the change of the these

4 MOVs to squib values, which was considered by changing the CCF probability of 4 of 4 IRWST injection MOVs to the CCF probability of 4 of 4 IRWST injection squib valves. This was accomplished by changing the failure probability of basic event IWX-MV-GO1 to 2.6E-05 and its description to reflect the CCF of IRWST injection squib valves. However, in the internal documentation, the CCF of 4 of 4 IRWST injection squib valves was designated by IWX-EV-SA with the failure probability of 2.6E-05. The AP1000 PRA shows basic event IWX-EV-SA as CCF of 6 of 6 high pressure (HP) squib valves with the same failure probability of 2.6E-05. The CCF group of 6 reflects the change of the low pressure (LP) squib valves (120A/B) in the recirculation lines to HP squib valves similar to those in the IRWST injection lines. In preparing the AP600 cutset file for use as the starting point in creating the AP1000 shutdown model, the basic event IWX-MV-GO1 is changed to IWX-EV-SA with a failure probability of 2.6E-05 and description "CCF of IRWST HP squib valves."

IWX-EV4-SA: Based on the AP600 design changes after the initial AP600 shutdown PRA submittal, valves 118A/B and 120A/B in the recirculation lines were changed to low pressure squib valves, and CCF of these valves was designated by IWX-EV4-SA (CCF of 4 of 4 sump recirculation low-pressure (LP) squib valves (EVs) with a probability of 2.6E-05. However, as discussed with the staff during the review of the AP600 PRA, the squib valves 120A/B are designed for higher pressure than low-pressure squib valves 118A/B, and therefore IWX-EV4-SA is recalculated to reflect CCF of 2 of 2 LP squib valves (118A/B); the new failure probability is 5.8E-05. Note that in the AP600 design, IWX-EV4-SA is among the dominant shutdown risk contributors in the top 5 cutsets consisting of 2 elements. With the recognition of the diversity between valves 118A/B and 120A/B, IWX-EV4-SA will no longer be among the 2-element cutsets since the common-cause failure of valves 118A/B by themselves will not prevent sump recirculation; one of several combinations of valves in the recirculation lines will have to also fail. Such combinations of check valves, motor-operated valves and squib valves have a much lower probability than that reflected in the model. Therefore, retaining the cutsets from the AP600 design with IWX-EV4-SA set to 2.6E-05 provides a conservative AP1000 shutdown model. In other words, no credit is taken in the AP1000 shutdown assessment for the improved AP1000 design in using diverse squib valves in containment sump recirculation lines.

PXX-AV-LA: In the AP600 model, PXX-AV-LA is used in the PRHR system fault trees to represents CCF of air-operated valves PXS-V108A/B with a failure probability of 9.6E-05. In the AP1000 design, success of the PRHR system requires operation of two additional valves (i.e., IRWST gutter air-operated valves (AOVs). CCF of these gutter valves is designated by PXX-AV-LA1 with a failure probability of 9.6E-05 also. Since the AP1000 shutdown evaluation is done by manipulating the cutsets from the AP600 model, PXX-AV-LA is doubled (i.e., set to 1.92E-04) in the cutsets representing the AP1000 model. Note that, with this change, the core damage frequency (CDF) is essentially the same; the CDF changed from 1.23E-07 to 1.231E-07.

This method is acceptable, since examination of the cutsets of the revised PRHR at-power fault tree for the AP1000 shows that the system failure probability is twice the AP600 value and the dominant contributors are common-cause failure of the air-operated valves.

54.6 Human Reliability Assessment for AP1000

The operator actions and human error probabilities for events during AP1000 shutdown conditions are judged to be similar for the AP600 plant. Moreover, based on the conservative modeling of the operator actions discussed in Chapter 30, and given that the operator actions were not among the most dominant contributors to the AP600 shutdown risk, these human error probabilities (HEP) are judged to be conservative for use in the AP1000 Shutdown model.

The differences in the plant response times in the AP600 and AP1000 plants for a loss of the normal residual heat removal system (RNS) at mid-loop conditions when injection from IRWST is lost is shown in Table 54-3. The operator actions for this scenario in the AP600 model are assessed herein to determine if they are affected by the shorter response times for the AP1000.

The AP600 Level 1 shutdown model uses five event trees for the accident sequences during drained conditions; these are IEV-RCSOD, IEV-LOSPD, IEV-RNSD, IEV-CCWD and IEV-LOCA24D. The event trees contain sequences with failure of normal IRWST injection followed by failure of gravity injection via the RNS suction valve. The affected system fault trees are: IW2AO, IW2A, IW2AP and IWRNS. Fault trees IW2AO, IW2A and IW2AP use operator action IWN-MAN00 to model the actuation of normal IRWST injection, and fault tree IWRNS uses RHN-MAN05 to model gravity injection through the RNS suction valve. Therefore, operator actions IWN-MAN00 and RHN-MAN05 are inspected to determine if their AP600 application is valid for the AP1000 model with the shorter times shown in Table 54-4.

The accident sequences quantified in the PRA lead to the core damage end-state which is assumed to occur upon core uncovery (i.e., in 40 minutes from event initiating for the AP1000). For a conservative evaluation, the time to core damage is assumed to be 22 minutes (i.e., the time to empty hot leg).

Based on the human reliability analysis (HRA) procedure discussed in Chapter 30, approximately 12 minutes of slack time exists for completing these tasks in the AP1000 model, as shown in the table below. According to the HRA procedure, the recovery and dependency models of the HRA are insensitive to changes in the time window if the slack time is greater than 10 minutes. Also shown in the following table, both the unconditional and conditional HEPs for these operator actions are the same for the AP600 and AP1000 models.

HEP Evaluation for Loss of RNS at Mid-loop Without IRWST Injection							
	AP600		Times (min)		AP1000		
Basic Event Identifier	Uncond. HEP	Cond. HEP	AP600	AP1000	Slack Time	Uncond. HEP	Cond. HEP
IWN-MAN00	1.15E-03	1.5E-01	Tw > 60 Ta = 10	Tw = 22 Ta = 10	> 10 min	1.15E-03	1.5E-01
RHN-MAN05	1.60E-03	1.5E-01	Tw > 60 Ta = 10	Tw = 22 Ta = 10	> 10 min	1.60E-03	1.5E-01

Tw: time window
Ta: actual time

54.7 Core Damage Quantification

The core damage frequency of the AP600 shutdown model is 1.04E-07 events per year. The top 200 cutsets from this quantification output file are shown in Table 54-5. The core damage frequency of the AP1000 shutdown model is 1.23E-07 events per year. The top 200 cutsets from this quantification output file are shown in Table 54-6.

As shown by the dominant cutsets of the AP600 and AP1000 shutdown models, the risk profiles of these plants for events during shutdown conditions are almost identical. The results indicate that the three events dominating the CDF for each plant are loss of component cooling/service water during drained condition, loss-of-offsite power during drained condition, and loss of RNS during drained condition. The AP1000 and AP600 initiating event core damage contributions are included in Table 54-4. This data shows the initiating event importance to be similar for the two plants.

The dominant sequences are described in the subsections that follow. The twelve dominant accident sequences comprise 77 percent of the level 1 shutdown core damage frequency. These dominant sequences consists of:

- Loss of component cooling water system (CWS) or service water system (SWS) initiating event during drained condition with a contribution of 64 percent of the CDF
- Loss of RNS initiating event during drained condition with a contribution of 6 percent of the CDF
- Loss-of-offsite power initiating event during drained condition with a contribution of 5 percent of the CDF
- RCS overdraining event during drainage to mid-loop with a contribution of 2 percent of the CDF.

Loss of Component Cooling or Service Water System Initiating Event During Drained Condition

These sequences are described as the loss of decay heat removal initiated by failure of the component cooling water or service water system during drained condition. The loss of decay heat removal occurs following loss of CWS or SWS during mid-loop/vessel flange operation which has an estimated duration of 120 hours.

The major contributors to risk due to loss of CWS or SWS during drained condition are the following failures:

- Hardware failures of both service water pumps or common-cause failure of output logic I/Os from the plant control system (PLS)
- Common-cause failure of the automatic depressurization system (ADS) 4th stage squib valves
- Common-cause failure of the IRWST high pressure squib valves
- Common-cause failure of the strainers in the IRWST tank
- Common-cause failure of the recirculation sump strainers.

Loss of RNS Initiating Event During Drained Condition

This sequence is described as the loss of decay heat removal initiated by failure of the RNS during drained condition. The loss of decay heat removal occurs following loss of RNS during mid-loop/vessel flange operation which has an estimated duration of 120 hours.

The major contributors to risk due to loss of RNS during drained condition are the following failures:

- Common-cause failure of the RNS pumps to run
- Common-cause failure of the ADS 4th stage squib valves
- Common-cause failure of the IRWST high pressure squib valves
- Common-cause failure of the strainers in the IRWST tank
- Common-cause failure of the recirculation sump strainers.

Loss-of-Offsite Power Initiating Event During Drained Condition (with failure of grid recovery within 1 hour)

This sequence is initiated by loss-of-offsite power during mid-loop/vessel flange operation, which has an estimated duration of 120 hours. Following this initiating event, the RNS does not restart automatically, and the grid is not recovered within 1 hour.

The major contributors to risk given loss-of-offsite power (without grid recovery) are the following failures:

- Software common-cause failure of all cards
- Failure of the RNS pump to run or restart
- Failure of the diesel generator to start or run
- Failure of the main breaker (100 or 200) to open
- Failure to recover ac power within 1 hour
- Common-cause failure of the ADS 4th stage squib valves
- Common-cause failure of the IRWST high pressure squib valves
- Common-cause failure of the strainers in the IRWST tank
- Common-cause failure of the recirculation sump strainers.

Loss-of-Offsite Power Initiating Event During Drained Condition (with success of grid recovery within 1 hour)

This sequence is initiated by loss-of-offsite power during mid-loop/vessel flange operation which has an estimated duration of 120 hours. Following this initiating event, the RNS does not restart automatically, the grid is recovered within 1 hour but manual RNS restart after grid recovery fails.

The major contributors to risk, given loss-of-offsite power (with grid recovery), are the following failures:

- Software common-cause failure of all cards
- Failure of the RNS pump to run or restart
- Common-cause failure of the ADS 4th stage squib valves
- Common-cause failure of the IRWST high pressure squib valves
- Common-cause failure of the strainers in the IRWST tank
- Common-cause failure of the recirculation sump strainers.

RCS Overdraining Event During Drainage to Mid-loop

This sequence is described as RCS overdraining initiating event during drainage to mid-loop condition; draining to mid-loop has an estimated duration of 39 hours. Following the initiating event, manual isolation of the RNS fails.

The major contributors to risk due to RCS overdraining are the following failures:

- Common-cause failure of the chemical and volume control system (CVS) air-operated valves to close automatically upon receipt of low hot leg level signals and failure of the operator to stop draining

- Operator fails to isolate the RNS

- Common-cause failure of the ADS 4th stage squib valves

- Operator fails to open IRWST injection squib valves
- Common-cause failure of the strainers in the IRWST tank
- Common-cause failure of the recirculation sump strainers.

54.7.1 Discussion of Results

The AP1000 Level 1 shutdown PRA has an estimated CDF of 1.23E-07 events/year. This CDF is conservative because credit is not taken for the design enhancement in using diverse squib valves in the recirculation lines. The failure of the recirculation function is represented by basic event IWX-EV4-SA (CCF of 2 of 2 LP squib valves) with a probability of 2.6E-05. However, the failure of the recirculation function would require other combinations of valves, in addition to these low pressure squib valves, to fail. Thus, the cutsets with basic event IWX-EV4-SA (such as cutset #3) are overly conservative. The combined common-cause failure of valves (i.e., combinations of check valves, squib valves and motor-operated valves) that could fail the recirculation function has a probability judged to be less than 1.0E-6. If the failure of the valves in the recirculation lines is assigned a conservative CCF probability of 1.0E-06, the estimated CDF of the AP1000 Level 1 shutdown PRA becomes 1.0E-07 events/year. Therefore, if credit is taken for the diverse squib valves in the recirculation lines of the AP1000 plant, the estimated CDF of the Level 1 shutdown PRA would be the same for the AP1000 and AP600 plants.

54.8 Estimation of Shutdown Large Release Frequency

AP600 shutdown level 2 model is applicable to the AP1000 design for estimating plant LRF; moreover, the dominant sequences contributing to AP1000 shutdown risk are the same as those of AP600. The conditional containment failure probability for AP600 was calculated to be 1.5E-08/9.0E-08 = 0.1667. Thus, the containment effectiveness is 83.3 percent. This conditional probability is used to estimate the AP1000 LRF as follows:

LRF(AP1000) = 0.1667 * 1.23E-07 = 2.05E-08/yr.

Note that the AP600 shutdown CDF from Revision 0 of 9.0E-08/yr is used to estimate the conditional containment damage probability since it gives the largest estimate and is also the only CDF revision available to go with an LRF calculation.

The release frequency for events at shutdown is comparable to the release frequency for internal events at power. The shutdown risk assessment for AP1000 indicates that the risk profile and insights of the AP600 shutdown PRA are applicable to the AP1000 design. Based on that assessment, the following breakdown of the AP1000 LRF is provided:

- 77.4 percent of the LRF is caused by containment failure after 24 hours (release category CFV). This release is due to accident class LP-3BE with the following characteristics:
  - RCS is fully depressurized; no cavity flooding, vessel failure, debris dryout, long-term core-concrete interaction, basemat melt-through.

- 22.5 percent of the LRF is caused by the compromised containment integrity, such as containment bypass (BP, 14.6 percent), containment isolation failure (CI, 5.0 percent) and intact containment with excessive leakage (XL, 2.9 percent). This release is mainly due to accident classes LP-CBP and LP-3BE with the following characteristics:
  - LP-CBP (BY) = RCS overdraining during mid-loop or RNS pipe rupture during non-drained conditions, failure to manually isolate leak, failure of gravity injection or sump recirculation.
  - LP-3BE (CI/XL) = Fully depressurized RCS, cavity flooded, vessel intact, containment isolation failed or excessive leakage.
- 0.15 percent of the LRF is caused by containment failure before 24 hours. This is an insignificant contributor to plant risk.

54.9 Sensitivity Analyses

This section contains the sensitivity analyses performed for the AP1000 shutdown PRA.

54.9.1 Case 1 – Minimum Equipment per Tech Specs During Drained Conditions

AP1000 Technical Specification (TS) 3.5.8 allows one of the IRWST injection trains and one of the containment sump recirculation trains to be out of service during reduced inventory conditions; and TS 3.4.14 allows two ADS stage 4 valves to be out of service during reduced inventory conditions. This sensitivity study is performed to estimate the core damage frequency if one train of IRWST, the associated containment sump recirculation train, and two ADS stage 4 valves are out of service at the same time.

It is assumed that the A train of IRWST and corresponding sump recirculation train are unavailable. This also makes the IRWST to RNS connection via valve V23 unavailable. Moreover, the first two lines of the ADS stage 4 are assumed unavailable. The sensitivity analysis is done on the drained initiating events. The non-drained cases remain the same as the base case.

The affected components and their corresponding basic events are identified. These components are set to failure to simulate their being out of service. The CCF events associated with these component groups are also identified, and their failure probabilities are increased. Table 54-7 shows the components, basic events, and CCF events that are modified. Table 54-8 shows the CCF and other relevant calculations.

The CDF result of the sensitivity analysis for the drained cases is 1.95E-06/year. The base non-drained CDF contribution is added to give the total CDF of 2.19E-06 for this sensitivity analysis. This should be compared to the base case of 1.23E-07/year CDF.

The results of the sensitivity analysis are summarized in Table 54-9.

The sensitivity analysis shows that although there is a factor of 18 increase in the CDF compared to the base case, the plant CDF for shutdown events is still small (2.2E-06/year)

even if the IRWST, sump recirculation, and ADS trains identified above are out of service during drained shutdown cases as allowed by the Technical Specifications.

54.9.2 Case 2 – No Credit for Standby Nonsafety Systems

In the AP1000 PRA, a sensitivity case was performed for events at-power (case 36), in which the standby systems were assumed to be unavailable when an initiating event occurs. This case was used as the reference for RTNSS evaluation. The same sensitivity case is performed for shutdown PRA. The standby systems assumed to be unavailable in response to a shutdown event are:

- CVS
- SFW
- RNS
- DAS
- DGs

These are the same systems used in sensitivity case 36. Note that CVS and SFW are not credited in the shutdown PRA and, thus, do not appear in the core damage cutsets.

Motor-operated valve MOV23 in the RNS path can be used for gravity injection by an operator action, if the normal IRWST injection fails. This function of the valve is safety-related and is already credited in the AP1000 shutdown PRA event trees, in the node GIRNS (gravity injection via RNS). This path is also credited in the current sensitivity analysis.

The sensitivity analysis results in a plant CDF of 1.23E-06/year. The top core damage cutsets are reported in Table 54-10. The basic events set to failure ("dropped") to make the sensitivity analysis are reported in Table 54-11 to enable future duplication of the case.

Table 54-12 gives the contribution of initiating events to plant CDF. Results of the table show that three events per 100 years of plant operation are postulated. This corresponds to about one event per plant lifetime. If such an event occurs, and is assumed not to be mitigated by nonsafety systems of RNS, DAS, and DGs, the average conditional core damage probability (CDP) of the AP1000 is 4E-05. This result indicates that the plant is robust against shutdown accidents even with only safety front-line systems credited to mitigate such events. When the above-mentioned nonsafety systems are credited, the average conditional core damage probability becomes 4E-06 (1.23E-07/2.94E-02). This is a low CDP, given a challenge to the plant systems occur during low power and shutdown operations.

Estimation of Large Release Frequency

The large release frequency (LRF) associated with the CDF in this sensitivity case is estimated as 6.88E-07/year. For this estimate, the conditional containment failure probability of 0.559, which was calculated for the AP600 focused PRA, is used. This relatively high failure fraction is deemed to be applicable to the AP1000.

The benefit of crediting manual DAS in this sensitivity analysis is presented in case 4, which is reported in the following paragraphs.

54.9.3 Case 3 – HEPs Set Equal to 0.5

In this sensitivity analysis, the HEPs appearing in the shutdown CDF cutsets are set equal to 0.5, if they are less than that value. The operator actions used in IEV-RCSOD (RCS-MANODS1 and RCS-MANODS2) are also set equal to 0.5. The shutdown CDF becomes 5.533E-05/year. The top 200 cutsets are shown in Table 54-13. The basic events, whose probabilities are changed, are shown in Table 54-14.

54.9.4 Case 4 – No Credit for Standby Nonsafety Systems – Credit for Manual DAS

This case is similar to Case 2, except credit is taken for manual DAS actuuation, which has adminsitrative controls placed on it. Other than this credit, the same standby systems as in case 2 were assumed to be unavailable when an initiating event occurs. The standby systems assumed to be unavailable in response to a shutdown event are:

- CVS
- SFW
- RNS
- Automatic DAS (manual DAS is credited)
- DGs

Note that CVS and SFW are not credited in the shutdown PRA and, thus, do not appear in the core damage cutsets.

Motor-operated valve MOV23 in the RNS path can be used for gravity injection by an operator action, if the normal IRWST injection fails. This function of the valve is safety-related and is already credited in the AP1000 shutdown PRA event trees, in the node GIRNS (gravity injection via RNS). This path is also credited in the current sensitivity analysis.

The sensitivity analysis results in a plant CDF of 9.73E-07/year. This is a modest 21 percent decrease in CDF calculated in case 2 where credit is not taken for manual DAS actuation.

Table 54-15 contains the top CDF cutsets for this case. The list of basic events set to failure to generate this case is given in Table 54-16 to allow duplication of this case. The contribution of initiating events to plant CDF is given in Table 54-17.

Estimation of Large Release Frequency

The large release frequency (LRF) associated with the CDF in this sensitivity case is estimated as 3.84E-07/year. For this estimate, a conditional containment failure probability of 0.349 is estimated and used.

54.9.5 Case 5 – Assessment of Containment Closure Failure Probability

This section provides an assessment of the failure probabilities for containment isolation during shutdown modes where containment closure is required. In Modes 5 and 6 when the upper internals are in place, containment closure capability is required. Containment closure capability is defined in the Technical Specifications as having all potential escape paths from containment closed or capable of being closed. Therefore, containment can be closed prior to the time steam would be released to the containment following an event, such as a loss of the normal decay heat removal capability through the normal residual heat removal system.

According to the Technical Specification requirements, the capability to close the containment before steam is released to the containment must be confirmed in order for the hatches and/or penetrations to be kept open during the respective plant conditions in Modes 5 and 6. In that regard, the containment would need to be closed during the mid-loop period at the beginning of a refueling since the diagnosis and decision time is greater than the time to steaming in this condition. Containment closure may not be required for the mid-loop period at the end of a refueling since the core decay heat is lower due to decay time and the partial core replacement with new fuel, and there is a longer time window for the operators to complete this task prior to steaming. The need for containment closure during the end of refueling mid-loop would need to be confirmed based on the time to steaming for that condition. B 3.6.8-1 of AP1000 DCD Chapter 16.1 is applicable only to conditions before fuel replacement.

In other plant conditions, earlier in time during Modes 5 and 6, decay heat level would be higher than during the mid-loop period discussed previously; however, steaming to the containment would occur later than for mid-loop conditions in these modes because there is more water in the reactor. This provides a longer time window for the operators to close the hatches and penetrations. Therefore, it is possible that the containment would be open during such periods of higher decay heat levels since there is a longer time window for the operators to complete the task.

The following assumptions are made in this evaluation:

- Equipment and maintenance hatches, personnel hatches, and temporary electrical and instrument penetrations are open.
- The openings include: one main equipment hatch, one maintenance hatch, two personnel hatches, and three spare penetrations.
- More than one temporary line or cable can fit through each spare penetration. Such lines are fitted with quick disconnect attachments.
- Each personnel hatch consists of two doors in series that are normally interlocked to maintain containment integrity. The interlock is defeated to allow both doors to be kept open.
- The openings are closed manually; the equipment and maintenance hatches are closed from inside containment, and the other openings are closed from outside containment.

- The openings are manned by maintenance personnel with responsibilities as follows:

  - Two persons for closing main equipment hatch
  - Two persons for closing maintenance hatch
  - Two persons for closing each personnel hatch
  - Two persons for disconnecting the lines and closing the spare penetrations

  One person can close each opening with the second person serving as backup or assistant.

- Based on the existence of AP1000 shutdown emergency response guidelines, it is assumed that detailed written procedures will be developed and used for closing the openings.

- It is assumed that loss of RNS is the cue for initiating closure of these openings; therefore, there is a time window of approximately 50 minutes to complete these actions. It is further assumed the containment environment is habitable up to 145°F.

- Personnel are required to evacuate the containment before closing the personnel hatches; in that regard, the equipment and maintenance hatches must be closed prior to closing the personnel hatches. It is assumed that it takes about 30 minutes to close the equipment and maintenance hatches, and during that time, personnel in the containment are evacuated.

- It is assumed the other openings, all of which are closed from outside containment, can be also closed within the actual time of 30 minutes discussed in the previous paragraph.

- Although the loss of RNS is expected to be diagnosed by the control room personnel, it is expected that an alarm would be annunciated in the containment to signify the need for containment closure. To be conservative, it is assumed that cognitive diagnosis for closing the hatches (by the maintenance crew) is required and this diagnosis must be completed within 15 minutes from the alarm. According to previous assumptions, a time window of about 35 minutes remains to physically close the openings.

- On closing each opening, one maintenance crew (MC) member is assigned a low dependency on the other crew member.

- A high stress level is assigned for this task according to THERP 20-16, item 5 (Reference 54-1).

- It is assumed that the hatches and doors for the openings are exercised (when they are first opened) to ensure they can close on demand. Therefore, hardware failures of these openings are judged to be highly unlikely; (that is, an estimated failure probability less than 1.0E-06 per demand for each opening). However, if 1.0E-05 per demand is conservatively applied for the failure probability of one of these openings to close, then a failure probability of 7.0E-05 per demand is assumed for hardware failure of these openings.

HEP Quantification

Quantification of the human error probability for this task is as follows:

- (D_{HEP}) Diagnosis Error Calculation:
  - D1: Failure to diagnose need for closing containment hatches within 15 minutes = 4.0E-02 (THERP 20-3 and Figure 12-4 [Reference 54-1])
  - $D2_{(MC1)}$: Failure to respond to 1 of 1 local alarm = 2.7E-04 (THERP 20-23 [Reference 54-1])
  - $D2_{(MC2)}$: Low crew dependency assigned to the second crew member = 0.05 (THERP 20-4 [Reference 54-1])
  - $D2 = D2_{(MC1)} \times D2_{(MC2)} = 2.7E\text{-}04 \times 0.05 = 1.35E\text{-}05$;
  - $(D_{HEP}) = D1 \times D2 < 1.0E\text{-}05$.
- (A_{HEP}) Action Execution Calculation:
  - A1 a) Omit action to close assigned opening (omission error) = 1.3E-03 (THERP 20-7 [Reference 54-1])
    b) Stress multiplier = 5
  - $A1_{(MC1)} = a \times b = 6.5E\text{-}03$
  - $A1_{(MC2)}$ = 0.05 (THERP 20-18 [Reference 54-1])

  Therefore, action execution failure for one opening is estimated as:

  $$A1_{HEP} = A1_{(MC1)} \times A1_{(MC2)} = 3.25E\text{-}04.$$

  Since there are seven openings, the total action execution failure is:

  $$A_{HEP} = A1_{HEP} \times 7 = 3.25E\text{-}04 \times 7 = 2.28E\text{-}03.$$

  Therefore, the HEP for closing the containment hatches and temporary penetrations is:

  $$D_{HEP} + A_{HEP} = 2.28E\text{-}03.$$

Result

The estimated failure probability of the openings for containment closure is the summation of the assumed hardware failure probability (7.0E-05) and the HEP (2.28E-03); that is, a failure probability of 2.35E-03.

Fault tree analysis is used to calculate the failure probability of the containment isolation (CIST) as 1.71E-02; this result was used to calculate the frequency associated with the CI

release category. This fault tree model does not include the additional failure probability in case the hatches are open. By including the failure probability of 2.35E-03 in the CIST fault tree, the estimated failure probability of containment isolation changes from 1.71E-02 to 1.95E-02 for the cases when the hatches are open. This is an increase of approximately 14 percent. This increase of 14 percent is judged to be insignificant and has no effect on the PRA results.

Summary of Containment Closure During Shutdown

During shutdown operations, the containment isolation requirements are governed by the plant Technical Specifications. According to these Technical Specifications,

- During plant operation in Modes 1, 2, 3, and 4, Technical Specifications 3.6.1, 3.6.2, and 3.6.3 of AP1000 DCD Chapter 16.1 require that the containment isolation must be maintained (therefore, the containment hatches cannot be opened);

- During Modes 5 and 6, containment penetrations, such as the equipment hatches, may be open only if the time it takes to manually close the penetrations is less than the time it takes to steam to the containment after a loss of RCS heat removal accident. Otherwise, the containment hatches are not allowed to be open. The time to close the penetrations before steaming must include the diagnosis and decision-making time, in addition to the time required to physically complete the closure action.

- Based on the criteria discussed above, the containment hatches will not be open during mid-loop operations before refueling, when the time to containment steaming after a loss of RCS cooling events is minimum.

The failure probability of the containment isolation is calculated in the above; it is the same as calculated in the AP600 PRA. The results and major insights of the containment isolation PRA analysis during shutdown conditions are summarized below:

- The time window for manually closing the containment hatches (and associated penetrations) is 50 minutes in calculation of the failure probability of the manual closure of the hatches. It is expected that upon loss of RCS cooling, the first 15 minutes will be used up for diagnosis and decision-making to close the hatches. It is also estimated that it will take 30 minutes for the hatches to be closed. Thus, a total of 45 minutes is needed to complete the closure of the hatches.

- The containment isolation failure probability (when the hatches are not open) is calculated to be 1.71E-02.

- The containment isolation failure probability when the hatches are open is calculated to be 1.95E-02. This probability includes an operator failure probability of 2.28E-03, failure to close the hatches.

  There is no significant difference between the two probabilities mentioned above, with and without the hatches being open, as long as the time window of 50 minutes is applicable.

- Although the minimum time to boiling during mid-loop operations is mentioned, and is different in the AP600 and AP1000 designs, this fact has no bearing on the calculation of the failure probability of the manual closure of the hatches. By the Technical Specifications, hatch opening is not permitted unless the specified time window of 50 minutes to steaming is available (in Modes 5 and 6); the opening of the hatch(es) would be delayed until the 50-minute time window to steaming is feasible.

  Therefore, given the criteria in the Technical Specifications that governs containment closure, the AP1000 plant will effectively improve containment closure reliability because the containment will not be allowed to open for the same time period as assumed for the AP600.

54.10 Conclusions

The AP1000 shutdown PRA assessment demonstrates that, like the AP600, the risk to the AP1000 plant from events that can occur during shutdown is low. The core damage frequency for the AP1000 is similar to that of the AP600. In addition, the at-power CDF and large, release frequency (LRF) are also similar for both plants. Based on this assessment, it is judged that no additional insights would be gained by performing a quantification of the LRF from events that could occur at shutdown for the AP1000. However, an estimate of LRF is provided.

54.11 Reference

54-1 NUREG CR-1278; Handbook of Human Reliability Analysis, A. D. Swain, August 1983.

Table 54-1

AP1000 INITIATING EVENT FREQUENCIES DURING SHUTDOWN CONDITIONS

Initiating Events Description	IE Identifier	Probability
Loss-of-offsite power during non-drained conditions	IEV-LOSPND	1.82E-02
Loss of decay heat removal during non-drained conditions due to failure of normal residual heat removal system	IEV-RNSND	1.02E-03
Loss of decay heat removal during non-drained conditions due to failure of component cooling water or service water system	IEV-CCWND	3.99E-03
Loss-of-coolant accident during non-drained conditions due to rupture of the normal residual heat removal system piping	IEV-LOCAPRND	1.61E-05
Loss-of-coolant accident during non-drained conditions due to inadvertent or spurious opening of the normal residual heat removal system motor-operated valve RNS-V024	IEV-LOCA24ND	1.73E-05
Overdraining of the reactor coolant system during drain-down to mid-loop	IEV-RCSOD	5.28E-06
Loss-of-offsite power during drained conditions	IEV-LOSPD	5.28E-03
Loss of decay heat removal during drained conditions due to failure of normal residual heat removal system	IEV-RNSD	9.69E-05
Loss of decay heat removal during drained conditions due to failure of component cooling water or service water system	IEV-CCWD	7.16E-04
Loss-of-coolant accident during drained conditions due to inadvertent or spurious opening of the normal residual heat removal system motor-operated valve RNS-V024	IEV-LOCA24D	1.15E-05

Table 54-2

AP1000 DESIGN IMPACT ON AP600 SHUTDOWN MODEL

System	Design/Modeling Change	Impact on Shutdown Model	Comment
IRWST	a) MOV 117 A&B changed from normally closed to normally open (fail-as-is) b) Recirc LP squib 120A/B changed to HP squib 120A/B	Possible lower random failure prob for spurious closure; No adverse effect on CCF CCF of 120A/B is combined with four IRWST HP inj squib (123A/B, 125A/B); – Lower overall recirc squib CCF due to diversity (i.e., CCF of 2/2 LP times CCF of 6/6 HP)	a) CCF of MOVs used in IWF FT for Level 2 analysis b) Recirc squib 118A/B remain LP; this design change is a risk benefit
CMT	Volume increase; orifice resized for more flow	None	Injection duration same as AP600
RNS	RNS pump suction from the cask loading pit eliminates potential draining of IRWST. MOV 055 and CV 056 are RNS new suction source interface	No adverse effect on RNS initial operation; Additional operator action in task to realign RHR for recirc	Given the conservatism in the existing unconditional and conditional HEPs, the current HEP can be used
PCS	Addition of third passive containment cooling system (PCS) flow path.	No impact on model	Additional valve is not credited in shutdown PRA.
ADS	Full and partial ADS success criteria changed for full power: – full ADS: 3 of 4 stage 4 (instead of 2 of 4 stage 4) – Partial ADS: 2 stage 2/3 (instead of 1 stage 2/3) Note: Stage 4 lines increased from 10" to 14", and line size common to each pair of stage 4 increased from 12" to 18". Flow resistance reduced & vent flow area increased	Changes in the at-power ADS success criteria for AP1000 would NOT affect success criteria for shutdown. Partial ADS (1/4 stage 4) is adequately modeled in drained conditions which dominates shutdown risk. The conservative ADS model for full ADS does not impact shutdown risk	Full ADS: Quantification model is based on success of (3 of 4 stage 2/3) OR (1 of 4 stage 4) Partial ADS: Quantification model is based on success of 1 of 4 stage 4
PRHR	Success criteria require 1 of 2 gutter isolation AOVs to close	AP600 shutdown success criteria require AOVs 108A/B to open. In the AP1000 shutdown model, the CCF of AOVs 108A/B is modified to include the gutter isolation AOVs.	At-power system failure probability for AP1000 is twice the AP600 failure probability. See discussion of PXX-AV-LA in Section 54.5
FWS	Success criteria require 1 of 3 main feed (MF) pumps instead of 1 of 2	None	SGs are not credited in shutdown. SGs are available during filled conditions as a diverse heat removal means. Shutdown risk is already dominated by drained events

Table 54-3

TIMES FOR LOSS OF RNS AT MID-LOOP WITHOUT IRWST INJECTION

	Time after Shutdown (min)	Time to Boiling (min)	Time to Empty Hot Leg (min)	Time to Core Uncovery (min)
AP600	28	17	59	102
AP1000	28	10	22	40

Table 54-4

AP1000 & AP600 INITIATING EVENT CDF CONTRIBUTIONS

AP1000 IEV CDF Contributions

SYSTEM UNAVAILABILITY (Q) = 1.231E-07
NUMBER OF BASIC EVENTS = 10
NUMBER OF CUTSETS = 8674

INITIATING EVENT		IMPORTANCE (%DECREASE)	NUMBER OF CUTSETS	CORE DAMAGE CONTRIBUTION PROBABILITY	BASIC EVENT PROBABILITY
1	IEV-CCWD	68.50	2182	8.4309E-08	7.1600E-04
2	IEV-LOSPD	14.13	3154	1.7386E-08	5.2800E-03
3	IEV-RNSD	9.27	1075	1.1411E-08	9.6900E-05
4	IEV-RCSOD	3.05	523	3.7497E-09	5.2800E-06
5	IEV-LOCA24ND	1.65	718	2.0288E-09	1.7300E-05
6	IEV-CCWND	1.44	164	1.7690E-09	3.9900E-03
7	IEV-LOCA24D	1.10	488	1.3539E-09	1.1500E-05
8	IEV-LOSPND	.41	56	5.1025E-10	1.8200E-02
9	IEV-RNSND	.37	127	4.5210E-10	1.0200E-03
10	IEV-LOCAPRND	.09	187	1.1650E-10	1.6100E-05
		100	8674	1.23E-07	

AP600 IEV CDF Contributions

SYSTEM UNAVAILABILITY (Q) = 1.04E-07
NUMBER OF BASIC EVENTS = 10
NUMBER OF CUTSETS = 8674

INITIATING EVENT		IMPORTANCE (%DECREASE)	NUMBER OF CUTSETS	CORE DAMAGE CONTRIBUTION PROBABILITY	BASIC EVENT PROBABILITY
1	IEV-CCWD	68.09	2182	7.10E-08	6.02E-04
2	IEV-LOSPD	14.02	3154	1.46E-08	4.44E-03
3	IEV-RNSD	9.21	1075	9.61E-09	8.15E-05
4	IEV-RCSOD	3.02	523	3.15E-09	4.44E-06
5	IEV-LOCA24ND	1.89	718	1.97E-09	1.68E-05
6	IEV-CCWND	1.54	164	1.60E-09	3.75E-03
7	IEV-LOCA24D	1.28	488	1.33E-09	1.13E-05
8	IEV-LOSPND	0.46	56	4.78E-10	1.71E-02
9	IEV-RNSND	0.39	127	4.11E-10	9.61E-04
10	IEV-LOCAPRND	0.1	187	1.09E-10	1.51E-05
		100	8674	1.04E-07	

Table 54-5 (Sheet 1 of 25)

AP600 SHUTDOWN LEVEL 1 PRA TOP 200 CUTSETS

***** DOMINANT CUTSETS ***** Page: 1

Title: AP600 CDF Sensitivity with Surge Line Flood, Design Changes & Final Model Updates
File: AP600FNL.W1 (AP600 SD Base Case - 1/15/2002)
Reduced of Cutsets: 1.0420E-07

NUMBER	CUTSET PROB	PERCENT	BASIC EVENT NAME	EVENT PROB.	IDENTIFIER
1	1.81E-08	17.37	LOSS OF CCS/SWS WITH RCS DRAINED INITIATING EVENT OCCURS	6.02E-04	IEV-CCWD
			CCF OF ADS 4TH STAGE SQUIB VALVES TO OPEN	3.00E-05	ADX-EV-SA
2	1.57E-08	15.07	LOSS OF CCS/SWS WITH RCS DRAINED INITIATING EVENT OCCURS	6.02E-04	IEV-CCWD
			CCF OF 6/6 IRWST HP SQUIB VALVES TO OPEN	2.60E-05	IWX-EV-SA
3	1.57E-08	15.07	LOSS OF CCS/SWS WITH RCS DRAINED INITIATING EVENT OCCURS	6.02E-04	IEV-CCWD
			CCF OF 2/2 IRWST LP SQUIB VALVES TO OPEN	2.60E-05	IWX-EV4-SA
4	7.22E-09	6.93	LOSS OF CCS/SWS WITH RCS DRAINED INITIATING EVENT OCCURS	6.02E-04	IEV-CCWD
			CCF OF IRWST RECIRC SUMP STRAINERS PLUGGING	1.20E-05	REX-FL-GP
5	7.22E-09	6.93	LOSS OF CCS/SWS WITH RCS DRAINED INITIATING EVENT OCCURS	6.02E-04	IEV-CCWD
			CCF OF STRAINERS IN IRWST TANK	1.20E-05	IWX-FL-GP
6	3.09E-09	2.97	LOSS OF OFFSITE POWER INITIATING EVENT OCCURS WITH RCS DRAINED	4.44E-03	IEV-LOSPD
			OFFSITE AC POWER RECOVERED IN 1 HOUR	5.80E-01	SUC-R1S
			SOFTWARE CCF OF ALL CARDS	1.20E-06	CCX-SFTW
7	2.45E-09	2.35	LOSS OF RNS WITH RCS DRAINED INITIATING EVENT OCCURS	8.15E-05	IEV-RNSD
			CCF OF ADS 4TH STAGE SQUIB VALVES TO OPEN	3.00E-05	ADX-EV-SA
8	2.24E-09	2.15	LOSS OF OFFSITE POWER INITIATING EVENT OCCURS WITH RCS DRAINED	4.44E-03	IEV-LOSPD
			FAILURE TO RECOVER AC POWER IN 1 HOUR	4.20E-01	OTH-R1
			SOFTWARE CCF OF ALL CARDS	1.20E-06	CCX-SFTW
9	2.19E-09	2.10	LOSS OF CCS/SWS WITH RCS DRAINED INITIATING EVENT OCCURS	6.02E-04	IEV-CCWD
			CCF OF ORIFICES	3.63E-06	CCX-ORY-SPX
10	2.12E-09	2.03	LOSS OF RNS WITH RCS DRAINED INITIATING EVENT OCCURS	8.15E-05	IEV-RNSD
			CCF OF 2/2 IRWST LP SQUIB VALVES TO OPEN	2.60E-05	IWX-EV4-SA
11	2.12E-09	2.03	LOSS OF RNS WITH RCS DRAINED INITIATING EVENT OCCURS	8.15E-05	IEV-RNSD
			CCF OF 6/6 IRWST HP SQUIB VALVES TO OPEN	2.60E-05	IWX-EV-SA

Table 54-5 (Sheet 2 of 25)

AP600 SHUTDOWN LEVEL 1 PRA TOP 200 CUTSETS

NUMBER	CUTSET PROB	PERCENT	BASIC EVENT NAME	EVENT PROB.	IDENTIFIER
12	1.83E-09	1.76	OVERDRAINING OF RCS DURING DRAIN DOWN TO MID-LOOP INITIATING EVENT	4.44E-06	IEV-RCSOD
			OPERATOR FAILS TO ISOLATE RNS PIPE RUPTURE	5.50E-02	RHN-MAN04
			COND. PROB. OF IWN-MAN00 (OP. FAILS TO ACTUATE IRWST INJ)	5.00E-02	IWN-MAN00C
			COND. PROB. OF RHN-MAN05 (OP. FAILS TO OPEN RNS MOV V023)	1.50E-01	RHN-MAN05C
13	1.58E-09	1.52	LOSS OF CCS/SWS WITH RCS DRAINED INITIATING EVENT OCCURS	6.02E-04	IEV-CCWD
			CCF OF PRESSURE TRANSMITTERS	2.63E-06	CCX-XMTRX
14	1.21E-09	1.16	LOSS OF CCS/SWS WITH RCS DRAINED INITIATING EVENT OCCURS	6.02E-04	IEV-CCWD
			CCF OF IRWST TANK LEVEL TRANSMITTER	2.01E-04	IWX-XMTR
			OPERATOR FAILS TO ACTUATE SUMP RECIRC WHEN IRWST SIGNAL FAILS	1.00E-02	REN-MAN04
15	9.78E-10	.94	LOSS OF RNS WITH RCS DRAINED INITIATING EVENT OCCURS	8.15E-05	IEV-RNSD
			CCF OF STRAINERS IN IRWST TANK	1.20E-05	IWX-FL-GP
16	9.78E-10	.94	LOSS OF RNS WITH RCS DRAINED INITIATING EVENT OCCURS	8.15E-05	IEV-RNSD
			CCF OF IRWST RECIRC SUMP STRAINERS PLUGGING	1.20E-05	REX-FL-GP
17	7.24E-10	.69	OVERDRAINING OF RCS DURING DRAIN DOWN TO MID-LOOP INITIATING EVENT	4.44E-06	IEV-RCSOD
			OPERATOR SUCCEEDS IN ISOLATING RNS LEAK	9.45E-01	RHN-MAN04-SUCC
			OPERATOR FAILS TO ACTUATE IRWST INJECTION	1.15E-03	IWN-MAN00
			COND. PROB. OF RHN-MAN05 (OP. FAILS TO OPEN RNS MOV V023)	1.50E-01	RHN-MAN05C
18	7.22E-10	.69	LOSS OF CCS/SWS WITH RCS DRAINED INITIATING EVENT OCCURS	6.02E-04	IEV-CCWD
			SOFTWARE CCF OF ALL CARDS	1.20E-06	CCX-SFTW
19	5.04E-10	.48	LOCA/RNS-V024 OPENS INITIATING EVENT OCCURS WITH RCS FILLED	1.68E-05	IEV-LOCA24ND
			CCF OF GRAVITY INJECTION CHECK VALVES TO OPEN	3.00E-05	IWX-CV-AO
20	5.04E-10	.48	LOCA/RNS-V024 OPENS INITIATING EVENT OCCURS WITH RCS FILLED	1.68E-05	IEV-LOCA24ND
			CCF OF ADS 4TH STAGE SQUIB VALVES TO OPEN	3.00E-05	ADX-EV-SA
21	4.37E-10	.42	LOCA/RNS-V024 OPENS INITIATING EVENT OCCURS WITH RCS FILLED	1.68E-05	IEV-LOCA24ND
			CCF OF 2/2 IRWST LP SQUIB VALVES TO OPEN	2.60E-05	IWX-EV4-SA
22	4.33E-10	.42	LOSS OF CCS/SWS WITH RCS DRAINED INITIATING EVENT OCCURS	6.02E-04	IEV-CCWD
			MECHANICAL FAILURE CAUSES MOV 121A TO FAIL-TO-OPEN	3.00E-03	IRWMOD05S
			IRWST DISCHARGE LINE "B" STRAINER PLUGGED	2.40E-04	IWB-PLUG

Table 54-5 (Sheet 3 of 25)

AP600 SHUTDOWN LEVEL 1 PRA TOP 200 CUTSETS

NUMBER	CUTSET PROB	PERCENT	BASIC EVENT NAME				EVENT PROB.	IDENTIFIER
23	3.75E-10	.36	LOSS OF CCS/SWS	WITH RCS FILLED	INITIATING EVENT OCCURS		3.75E-03	IEV-CCWND
			FAILURE OF	MANUAL DAS	ACTUATION		1.16E-02	REC-MANDAS
			CCF OF THE POWER	INTERFACE OUTPUT	BOARDS IN PMS		8.62E-06	CCX-EP-SAM
24	3.59E-10	.34	LOSS OF CCS/SWS	WITH RCS FILLED	INITIATING EVENT OCCURS		3.75E-03	IEV-CCWND
			COND. PROB. OF	REC-MANDAS	(FAILURE OF MANUAL DAS ACTUATION)		5.06E-01	REC-MANDASC
			CCF OF ORIFICES				2.77E-04	CCX-ORY-SP
			OPERATOR FAILS	TO RECOGNIZE THE	NEED FOR RCS	DEPRESSURIZATION	6.83E-04	LPM-MAN05
25	3.39E-10	.33	LOCA/RNS-V024	OPENS INITIATING	EVENT OCCURS	WITH RCS DRAINED	1.13E-05	IEV-LOCA24D
			CCF OF ADS 4TH	STAGE SQUIB VALVES	TO OPEN		3.00E-05	ADX-EV-SA
26	3.23E-10	.31	LOSS OF CCS/SWS	WITH RCS FILLED	INITIATING EVENT OCCURS		3.75E-03	IEV-CCWND
			FAILURE OF	MANUAL DAS	REACTOR TRIP	HARDWARE	1.00E-02	MDAS
			CCF OF THE POWER	INTERFACE OUTPUT	BOARDS IN PMS		8.62E-06	CCX-EP-SAM
27	2.96E-10	.28	LOSS OF RNS WITH	RCS DRAINED	INITIATING EVENT OCCURS		8.15E-05	IEV-RNSD
			CCF OF ORIFICES				3.63E-06	CCX-ORY-SPX
28	2.94E-10	.28	LOCA/RNS-V024	OPENS INITIATING	EVENT OCCURS	WITH RCS DRAINED	1.13E-05	IEV-LOCA24D
			CCF OF 2/2 IRWST	LP SQUIB VALVES	TO OPEN		2.60E-05	IWX-EV4-SA
29	2.94E-10	.28	LOCA/RNS-V024	OPENS INITIATING	EVENT OCCURS	WITH RCS DRAINED	1.13E-05	IEV-LOCA24D
			CCF OF 6/6 IRWST	HP SQUIB VALVES	TO OPEN		2.60E-05	IWX-EV-SA
30	2.60E-10	.25	LOSS OF CCS/SWS	WITH RCS FILLED	INITIATING EVENT OCCURS		3.75E-03	IEV-CCWND
			COND. PROB. OF	REC-MANDAS	(FAILURE OF MANUAL DAS ACTUATION)		5.06E-01	REC-MANDASC
			CCF OF PRESSURE	TRANSMITTERS			2.01E-04	CCX-XMTR195
			OPERATOR FAILS	TO RECOGNIZE THE	NEED FOR RCS	DEPRESSURIZATION	6.83E-04	LPM-MAN05
31	2.37E-10	.23	LOSS OF OFFSITE	POWER INITIATING	EVENT OCCURS	WITH RCS DRAINED	4.44E-03	IEV-LOSPD
			FAILURE TO	RECOVER AC POWER	IN 1 HOUR		4.20E-01	OTH-R1
			BATTERY	DB1	UNAVAILABLE		2.70E-03	ED1MOD03
			COMMON CAUSE	FAILURE OF THE	BATTERIES	IDSA-DB-1A/1B	4.70E-05	CCX-BY-PN
32	2.14E-10	.21	LOSS OF RNS WITH	RCS DRAINED	INITIATING EVENT OCCURS		8.15E-05	IEV-RNSD
			CCF OF PRESSURE	TRANSMITTERS			2.63E-06	CCX-XMTRX
33	2.02E-10	.19	LOCA/RNS-V024	OPENS INITIATING	EVENT OCCURS	WITH RCS FILLED	1.68E-05	IEV-LOCA24ND
			CCF OF IRWST RECI	RC SUMP STRAINERS	PLUGGING		1.20E-05	REX-FL-GP

Table 54-5 (Sheet 4 of 25)

AP600 SHUTDOWN LEVEL 1 PRA TOP 200 CUTSETS

NUMBER	CUTSET PROB	PERCENT	BASIC EVENT NAME				EVENT PROB.	IDENTIFIER
34	2.02E-10	.19	LOCA/RNS-V024	OPENS INITIATING	EVENT OCCURS	WITH RCS FILLED	1.68E-05	IEV-LOCA24ND
			CCF OF STRAINERS	IN IRWST TANK			1.20E-05	IWX-FL-GP
35	1.83E-10	.18	LOSS OF OFFSITE	POWER INITIATING	EVENT OCCURS	WITH RCS DRAINED	4.44E-03	IEV-LOSPD
			FAILURE TO	RECOVER AC POWER	IN 1 HOUR		4.20E-01	OTH-R1
			FAILURE OF	PLS OUTPUT	LOGIC I/Os		2.09E-03	PL5MOD11
			COMMON CAUSE	FAILURE OF THE	BATTERIES	IDSA-DB-1A/1B	4.70E-05	CCX-BY-PN
36	1.81E-10	.17	LOSS OF OFFSITE	POWER INITIATING	EVENT OCCURS	WITH RCS FILLED	1.71E-02	IEV-LOSPND
			OFFSITE	AC POWER	RECOVERED IN	2 HOURS	7.60E-01	SUC-R2S
			SOFTWARE CCF	OF ALL CARDS			1.20E-06	CCX-SFTW
			FAILURE OF	MANUAL DAS	ACTUATION		1.16E-02	REC-MANDAS
37	1.75E-10	.17	LOSS OF OFFSITE	POWER INITIATING	EVENT OCCURS	WITH RCS DRAINED	4.44E-03	IEV-LOSPD
			FAILURE TO	RECOVER AC POWER	IN 1 HOUR		4.20E-01	OTH-R1
			CCF TO START	OF ENGINE-DRIVEN	FUEL PUMPS		2.00E-03	ZOX-PD-ES
			COMMON CAUSE	FAILURE OF THE	BATTERIES	IDSA-DB-1A/1B	4.70E-05	CCX-BY-PN
38	1.64E-10	.16	LOSS OF RNS WITH RCS DRAINED		INITIATING EVENT OCCURS		8.15E-05	IEV-RNSD
			CCF OF IRWST TANK LEVEL TRANSMITTER				2.01E-04	IWX-XMTR
			OPERATOR FAILS TO ACTUATE SUMP RECIRC WHEN IRWST SIGNAL FAILS				1.00E-02	REN-MAN04
39	1.56E-10	.15	LOSS OF OFFSITE	POWER INITIATING	EVENT OCCURS	WITH RCS FILLED	1.71E-02	IEV-LOSPND
			OFFSITE	AC POWER	RECOVERED IN	2 HOURS	7.60E-01	SUC-R2S
			SOFTWARE CCF	OF ALL CARDS			1.20E-06	CCX-SFTW
			FAILURE OF	MANUAL DAS	REACTOR TRIP	HARDWARE	1.00E-02	MDAS
40	1.51E-10	.14	LOSS OF OFFSITE	POWER INITIATING	EVENT OCCURS	WITH RCS DRAINED	4.44E-03	IEV-LOSPD
			FAILURE TO	RECOVER AC POWER	IN 1 HOUR		4.20E-01	OTH-R1
			BATTERY	DB1	UNAVAILABLE		2.70E-03	ED1MOD03
			CCF OF ADS 4TH STAGE SQUIB VALVES		TO OPEN		3.00E-05	ADX-EV-SA
41	1.36E-10	.13	LOCA/RNS-V024	OPENS INITIATING	EVENT OCCURS	WITH RCS DRAINED	1.13E-05	IEV-LOCA24D
			CCF OF STRAINERS	IN IRWST TANK			1.20E-05	IWX-FL-GP
42	1.36E-10	.13	LOCA/RNS-V024	OPENS INITIATING	EVENT OCCURS	WITH RCS DRAINED	1.13E-05	IEV-LOCA24D
			CCF OF IRWST RECIRC SUMP STRAINERS		PLUGGING		1.20E-05	REX-FL-GP

Table 54-5 (Sheet 5 of 25)

AP600 SHUTDOWN LEVEL 1 PRA TOP 200 CUTSETS

NUMBER	CUTSET PROB	PERCENT	BASIC EVENT NAME				EVENT PROB.	IDENTIFIER
43	1.33E-10	.13	LOSS OF CCS/SWS	WITH RCS FILLED	INITIATING EVENT OCCURS		3.75E-03	IEV-CCWND
			COND. PROB. OF	REC-MANDAS	(FAILURE OF MANUAL DAS ACTUATION)		5.06E-01	REC-MANDASC
			COMMON MODE	FAILURE OF INPUT	LOGIC GROUPS		1.03E-04	CCX-INPUT-LOGIC
			OPERATOR FAILS	TO RECOGNIZE THE	NEED FOR RCS	DEPRESSURIZATION	6.83E-04	LPM-MAN05
44	1.31E-10	.13	LOSS OF OFFSITE	POWER INITIATING	EVENT OCCURS	WITH RCS DRAINED	4.44E-03	IEV-LOSPD
			FAILURE TO	RECOVER AC POWER	IN 1 HOUR		4.20E-01	OTH-R1
			BATTERY	DB1	UNAVAILABLE		2.70E-03	ED1MOD03
			CCF OF 2/2 IRWST	LP SQUIB VALVES	TO OPEN		2.60E-05	IWX-EV4-SA
45	1.31E-10	.13	LOSS OF OFFSITE	POWER INITIATING	EVENT OCCURS	WITH RCS DRAINED	4.44E-03	IEV-LOSPD
			FAILURE TO	RECOVER AC POWER	IN 1 HOUR		4.20E-01	OTH-R1
			BATTERY	DB1	UNAVAILABLE		2.70E-03	ED1MOD03
			CCF OF 6/6 IRWST	HP SQUIB VALVES	TO OPEN		2.60E-05	IWX-EV-SA
46	1.26E-10	.12	OVERDRAINING OF	RCS DURING DRAIN	DOWN TO MID-LOOP	INITIATING EVENT	4.44E-06	IEV-RCSOD
			OPERATOR SUCCEEDS	IN ISOLATING RNS	LEAK		9.45E-01	RHN-MAN04-SUCC
			CCF OF ADS 4TH	STAGE SQUIB VALVES	TO OPEN		3.00E-05	ADX-EV-SA
47	1.21E-10	.12	LOSS OF OFFSITE	POWER INITIATING	EVENT OCCURS	WITH RCS DRAINED	4.44E-03	IEV-LOSPD
			FAILURE TO	RECOVER AC POWER	IN 1 HOUR		4.20E-01	OTH-R1
			BATTERY	DB1	UNAVAILABLE		2.70E-03	ED1MOD03
			COMMON CAUSE	FAILURE OF THE	INVERTER		2.40E-05	CCX-IV-XR
48	1.17E-10	.11	LOSS OF OFFSITE	POWER INITIATING	EVENT OCCURS	WITH RCS DRAINED	4.44E-03	IEV-LOSPD
			FAILURE TO	RECOVER AC POWER	IN 1 HOUR		4.20E-01	OTH-R1
			FAILURE OF	PLS OUTPUT	LOGIC I/Os		2.09E-03	PL5MOD11
			CCF OF ADS 4TH	STAGE SQUIB VALVES	TO OPEN		3.00E-05	ADX-EV-SA
49	1.12E-10	.11	LOSS OF OFFSITE	POWER INITIATING	EVENT OCCURS	WITH RCS DRAINED	4.44E-03	IEV-LOSPD
			FAILURE TO	RECOVER AC POWER	IN 1 HOUR		4.20E-01	OTH-R1
			CCF TO START	OF ENGINE-DRIVEN	FUEL PUMPS		2.00E-03	ZOX-PD-ES
			CCF OF ADS 4TH	STAGE SQUIB VALVES	TO OPEN		3.00E-05	ADX-EV-SA
50	1.09E-10	.10	OVERDRAINING OF	RCS DURING DRAIN	DOWN TO MID-LOOP	INITIATING EVENT	4.44E-06	IEV-RCSOD
			OPERATOR SUCCEEDS	IN ISOLATING RNS	LEAK		9.45E-01	RHN-MAN04-SUCC
			CCF OF 2/2 IRWST	LP SQUIB VALVES	TO OPEN		2.60E-05	IWX-EV4-SA

Table 54-5 (Sheet 6 of 25)

AP600 SHUTDOWN LEVEL 1 PRA TOP 200 CUTSETS

NUMBER	CUTSET PROB	PERCENT	BASIC EVENT NAME				EVENT PROB.	IDENTIFIER
51	1.09E-10	.10	OVERDRAINING OF	RCS DURING DRAIN	DOWN TO MID-LOOP	INITIATING EVENT	4.44E-06	IEV-RCSOD
			OPERATOR SUCCEEDS	IN ISOLATING RNS	LEAK		9.45E-01	RHN-MAN04-SUCC
			CCF OF 6/6 IRWST	HP SQUIB VALVES	TO OPEN		2.60E-05	IWX-EV-SA
52	1.05E-10	.10	LOSS OF OFFSITE	POWER INITIATING	EVENT OCCURS	WITH RCS DRAINED	4.44E-03	IEV-LOSPD
			FAILURE TO	RECOVER AC POWER	IN 1 HOUR		4.20E-01	OTH-R1
			COMMON CAUSE	FAILURE	4KV BREAKERS TO	OPEN	1.20E-03	ECX-CB-GO
			COMMON CAUSE	FAILURE OF THE	BATTERIES	IDSA-DB-1A/1B	4.70E-05	CCX-BY-PN
53	1.02E-10	.10	LOSS OF OFFSITE	POWER INITIATING	EVENT OCCURS	WITH RCS DRAINED	4.44E-03	IEV-LOSPD
			FAILURE TO	RECOVER AC POWER	IN 1 HOUR		4.20E-01	OTH-R1
			PLS LOGIC GROUP	PROCESSING	FAILURE UPON	DEMAND	1.16E-03	PL50301BSA
			COMMON CAUSE	FAILURE OF THE	BATTERIES	IDSA-DB-1A/1B	4.70E-05	CCX-BY-PN
54	1.02E-10	.10	LOSS OF OFFSITE	POWER INITIATING	EVENT OCCURS	WITH RCS DRAINED	4.44E-03	IEV-LOSPD
			FAILURE TO	RECOVER AC POWER	IN 1 HOUR		4.20E-01	OTH-R1
			PLS LOGIC GROUP	PROCESSING	FAILURE UPON	DEMAND	1.16E-03	PL50301ASA
			COMMON CAUSE	FAILURE OF THE	BATTERIES	IDSA-DB-1A/1B	4.70E-05	CCX-BY-PN
55	1.01E-10	.10	LOSS OF OFFSITE	POWER INITIATING	EVENT OCCURS	WITH RCS DRAINED	4.44E-03	IEV-LOSPD
			FAILURE TO	RECOVER AC POWER	IN 1 HOUR		4.20E-01	OTH-R1
			FAILURE OF	PLS OUTPUT	LOGIC I/Os		2.09E-03	PL5MOD11
			CCF OF 6/6 IRWST	HP SQUIB VALVES	TO OPEN		2.60E-05	IWX-EV-SA
56	1.01E-10	.10	LOSS OF OFFSITE	POWER INITIATING	EVENT OCCURS	WITH RCS DRAINED	4.44E-03	IEV-LOSPD
			FAILURE TO	RECOVER AC POWER	IN 1 HOUR		4.20E-01	OTH-R1
			FAILURE OF	PLS OUTPUT	LOGIC I/Os		2.09E-03	PL5MOD11
			CCF OF 2/2 IRWST	LP SQUIB VALVES	TO OPEN		2.60E-05	IWX-EV4-SA
57	9.78E-11	.09	LOSS OF RNS WITH	RCS DRAINED	INITIATING EVENT	OCCURS	8.15E-05	IEV-RNSD
			SOFTWARE CCF	OF ALL CARDS			1.20E-06	CCX-SFTW
58	9.70E-11	.09	LOSS OF OFFSITE	POWER INITIATING	EVENT OCCURS	WITH RCS DRAINED	4.44E-03	IEV-LOSPD
			FAILURE TO	RECOVER AC POWER	IN 1 HOUR		4.20E-01	OTH-R1
			CCF TO START	OF ENGINE-DRIVEN	FUEL PUMPS		2.00E-03	ZOX-PD-ES
			CCF OF 6/6 IRWST	HP SQUIB VALVES	TO OPEN		2.60E-05	IWX-EV-SA

Table 54-5 (Sheet 7 of 25)

AP600 SHUTDOWN LEVEL 1 PRA TOP 200 CUTSETS

NUMBER	CUTSET PROB	PERCENT	BASIC EVENT NAME				EVENT PROB.	IDENTIFIER
59	9.70E-11	.09	LOSS OF OFFSITE	POWER INITIATING	EVENT OCCURS	WITH RCS DRAINED	4.44E-03	IEV-LOSPD
			FAILURE TO	RECOVER AC POWER	IN 1 HOUR		4.20E-01	OTH-R1
			CCF TO START	OF ENGINE-DRIVEN	FUEL PUMPS		2.00E-03	ZOX-PD-ES
			CCF OF 2/2 IRWST	LP SQUIB VALVES	TO OPEN		2.60E-05	IWX-EV4-SA
60	9.61E-11	.09	LOSS OF RNS WITH	RCS FILLED	INITIATING EVENT	OCCURS	9.61E-04	IEV-RNSND
			FAILURE OF	MANUAL DAS	ACTUATION		1.16E-02	REC-MANDAS
			CCF OF THE POWER	INTERFACE OUTPUT	BOARDS IN PMS		8.62E-06	CCX-EP-SAM
61	9.35E-11	.09	LOSS OF OFFSITE	POWER INITIATING	EVENT OCCURS	WITH RCS DRAINED	4.44E-03	IEV-LOSPD
			FAILURE TO	RECOVER AC POWER	IN 1 HOUR		4.20E-01	OTH-R1
			FAILURE OF	PLS OUTPUT	LOGIC I/Os		2.09E-03	PL5MOD11
			COMMON CAUSE	FAILURE OF THE	INVERTER		2.40E-05	CCX-IV-XR
62	9.20E-11	.09	LOSS OF RNS WITH	RCS FILLED	INITIATING EVENT	OCCURS	9.61E-04	IEV-RNSND
			COND. PROB. OF	REC-MANDAS	(FAILURE OF MANUAL	DAS ACTUATION)	5.06E-01	REC-MANDASC
			CCF OF ORIFICES				2.77E-04	CCX-ORY-SP
			OPERATOR FAILS	TO RECOGNIZE THE	NEED FOR RCS	DEPRESSURIZATION	6.83E-04	LPM-MAN05
63	8.95E-11	.09	LOSS OF OFFSITE	POWER INITIATING	EVENT OCCURS	WITH RCS DRAINED	4.44E-03	IEV-LOSPD
			FAILURE TO	RECOVER AC POWER	IN 1 HOUR		4.20E-01	OTH-R1
			CCF TO START	OF ENGINE-DRIVEN	FUEL PUMPS		2.00E-03	ZOX-PD-ES
			COMMON CAUSE	FAILURE OF THE	INVERTER		2.40E-05	CCX-IV-XR
64	8.28E-11	.08	LOSS OF RNS WITH	RCS FILLED	INITIATING EVENT	OCCURS	9.61E-04	IEV-RNSND
			FAILURE OF	MANUAL DAS	REACTOR TRIP	HARDWARE	1.00E-02	MDAS
			CCF OF THE POWER	INTERFACE OUTPUT	BOARDS IN PMS		8.62E-06	CCX-EP-SAM
65	6.75E-11	.06	LOSS OF OFFSITE	POWER INITIATING	EVENT OCCURS	WITH RCS DRAINED	4.44E-03	IEV-LOSPD
			FAILURE TO	RECOVER AC POWER	IN 1 HOUR		4.20E-01	OTH-R1
			CCF OF RNS PUMPS	P01A/B TO START			7.70E-04	RNX-PM-FS
			COMMON CAUSE	FAILURE OF THE	BATTERIES	IDSA-DB-1A/1B	4.70E-05	CCX-BY-PN
66	6.71E-11	.06	LOSS OF OFFSITE	POWER INITIATING	EVENT OCCURS	WITH RCS DRAINED	4.44E-03	IEV-LOSPD
			FAILURE TO	RECOVER AC POWER	IN 1 HOUR		4.20E-01	OTH-R1
			COMMON CAUSE	FAILURE	4KV BREAKERS TO	OPEN	1.20E-03	ECX-CB-GO
			CCF OF ADS 4TH STAGE	SQUIB VALVES	TO OPEN		3.00E-05	ADX-EV-SA

Table 54-5 (Sheet 8 of 25)

AP600 SHUTDOWN LEVEL 1 PRA TOP 200 CUTSETS

NUMBER	CUTSET PROB	PERCENT	BASIC EVENT NAME				EVENT PROB.	IDENTIFIER
67	6.68E-11	.06	LOSS OF RNS WITH	RCS FILLED	INITIATING EVENT OCCURS		9.61E-04	IEV-RNSND
			COND. PROB. OF	REC-MANDAS	(FAILURE OF MANUAL DAS ACTUATION)		5.06E-01	REC-MANDASC
			CCF OF PRESSURE	TRANSMITTERS			2.01E-04	CCX-XMTR195
			OPERATOR FAILS	TO RECOGNIZE THE	NEED FOR RCS	DEPRESSURIZATION	6.83E-04	LPM-MAN05
68	6.49E-11	.06	LOSS OF OFFSITE	POWER INITIATING	EVENT OCCURS	WITH RCS DRAINED	4.44E-03	IEV-LOSPD
			FAILURE TO	RECOVER AC POWER	IN 1 HOUR		4.20E-01	OTH-R1
			PLS LOGIC GROUP	PROCESSING	FAILURE UPON	DEMAND	1.16E-03	PL50301ASA
			CCF OF ADS 4TH STAGE SQUIB VALVES		TO OPEN		3.00E-05	ADX-EV-SA
69	6.49E-11	.06	LOSS OF OFFSITE	POWER INITIATING	EVENT OCCURS	WITH RCS DRAINED	4.44E-03	IEV-LOSPD
			FAILURE TO	RECOVER AC POWER	IN 1 HOUR		4.20E-01	OTH-R1
			PLS LOGIC GROUP	PROCESSING	FAILURE UPON	DEMAND	1.16E-03	PL50301BSA
			CCF OF ADS 4TH STAGE SQUIB VALVES		TO OPEN		3.00E-05	ADX-EV-SA
70	6.40E-11	.06	LOSS OF OFFSITE	POWER INITIATING	EVENT OCCURS	WITH RCS DRAINED	4.44E-03	IEV-LOSPD
			FAILURE TO	RECOVER AC POWER	IN 1 HOUR		4.20E-01	OTH-R1
			COMMON CAUSE	FAILURE	4KV BREAKER TO	CLOSE	7.30E-04	ECX-CB-GC
			COMMON CAUSE	FAILURE OF THE	BATTERIES	IDSA-DB-1A/1B	4.70E-05	CCX-BY-PN
71	6.16E-11	.06	LOSS OF CCS/SWS	WITH RCS DRAINED	INITIATING EVENT OCCURS		6.02E-04	IEV-CCWD
			CCF OF ACTUATION	LOGIC GROUPS			4.63E-05	CCX-PMAMOD1X
			MECHANICAL	FAILURE CAUSES	MOV 023 TO	FAIL-TO-OPEN	2.21E-03	RN23MOD5S
72	6.04E-11	.06	LOSS OF OFFSITE	POWER INITIATING	EVENT OCCURS	WITH RCS DRAINED	4.44E-03	IEV-LOSPD
			FAILURE TO	RECOVER AC POWER	IN 1 HOUR		4.20E-01	OTH-R1
			BATTERY	DB1	UNAVAILABLE		2.70E-03	ED1MOD03
			CCF OF STRAINERS	IN IRWST TANK			1.20E-05	IWX-FL-GP
73	6.04E-11	.06	LOSS OF OFFSITE	POWER INITIATING	EVENT OCCURS	WITH RCS DRAINED	4.44E-03	IEV-LOSPD
			FAILURE TO	RECOVER AC POWER	IN 1 HOUR		4.20E-01	OTH-R1
			BATTERY	DB1	UNAVAILABLE		2.70E-03	ED1MOD03
			CCF OF IRWST RECIRC SUMP STRAINERS		PLUGGING		1.20E-05	REX-FL-GP
74	6.02E-11	.06	LOSS OF CCS/SWS	WITH RCS DRAINED	INITIATING EVENT OCCURS		6.02E-04	IEV-CCWD
			FAILURE OF	MANUAL DAS	ACTUATION		1.16E-02	REC-MANDAS
			CCF OF THE POWER	INTERFACE OUTPUT	BOARDS IN PMS		8.62E-06	CCX-EP-SAM

Table 54-5 (Sheet 9 of 25)

AP600 SHUTDOWN LEVEL 1 PRA TOP 200 CUTSETS

NUMBER	CUTSET PROB	PERCENT	BASIC EVENT NAME				EVENT PROB.	IDENTIFIER
75	5.95E-11	.06	LOSS OF OFFSITE	POWER INITIATING	EVENT OCCURS	WITH RCS DRAINED	4.44E-03	IEV-LOSPD
			OFFSITE	AC POWER	RECOVERED IN	1 HOUR	5.80E-01	SUC-R1S
			CCF OF RNS PUMPS	P01A/B TO START			7.70E-04	RNX-PM-FS
			CCF OF ADS 4TH STAGE SQUIB VALVES		TO OPEN		3.00E-05	ADX-EV-SA
76	5.87E-11	.06	LOSS OF RNS WITH	RCS DRAINED	INITIATING EVENT	OCCURS	8.15E-05	IEV-RNSD
			MECHANICAL	FAILURE CAUSES	MOV 121A TO	FAIL-TO-OPEN	3.00E-03	IRWMOD05S
			IRWST DISCHARGE	LINE "B"	STRAINER	PLUGGED	2.40E-04	IWB-PLUG
77	5.82E-11	.06	LOSS OF OFFSITE	POWER INITIATING	EVENT OCCURS	WITH RCS DRAINED	4.44E-03	IEV-LOSPD
			FAILURE TO	RECOVER AC POWER	IN 1 HOUR		4.20E-01	OTH-R1
			COMMON CAUSE	FAILURE	4KV BREAKERS TO	OPEN	1.20E-03	ECX-CB-GO
			CCF OF 6/6 IRWST	HP SQUIB VALVES	TO OPEN		2.60E-05	IWX-EV-SA
78	5.82E-11	.06	LOSS OF OFFSITE	POWER INITIATING	EVENT OCCURS	WITH RCS DRAINED	4.44E-03	IEV-LOSPD
			FAILURE TO	RECOVER AC POWER	IN 1 HOUR		4.20E-01	OTH-R1
			COMMON CAUSE	FAILURE	4KV BREAKERS TO	OPEN	1.20E-03	ECX-CB-GO
			CCF OF 2/2 IRWST	LP SQUIB VALVES	TO OPEN		2.60E-05	IWX-EV4-SA
79	5.71E-11	.05	LOSS OF OFFSITE	POWER INITIATING	EVENT OCCURS	WITH RCS FILLED	1.71E-02	IEV-LOSPND
			FAILURE TO	RECOVER AC POWER	IN 2 HOURS		2.40E-01	OTH-R2
			SOFTWARE CCF	OF ALL CARDS			1.20E-06	CCX-SFTW
			FAILURE OF	MANUAL DAS	ACTUATION		1.16E-02	REC-MANDAS
80	5.62E-11	.05	LOSS OF OFFSITE	POWER INITIATING	EVENT OCCURS	WITH RCS DRAINED	4.44E-03	IEV-LOSPD
			FAILURE TO	RECOVER AC POWER	IN 1 HOUR		4.20E-01	OTH-R1
			PLS LOGIC GROUP	PROCESSING	FAILURE UPON	DEMAND	1.16E-03	PL50301ASA
			CCF OF 6/6 IRWST	HP SQUIB VALVES	TO OPEN		2.60E-05	IWX-EV-SA
81	5.62E-11	.05	LOSS OF OFFSITE	POWER INITIATING	EVENT OCCURS	WITH RCS DRAINED	4.44E-03	IEV-LOSPD
			FAILURE TO	RECOVER AC POWER	IN 1 HOUR		4.20E-01	OTH-R1
			PLS LOGIC GROUP	PROCESSING	FAILURE UPON	DEMAND	1.16E-03	PL50301ASA
			CCF OF 2/2 IRWST	LP SQUIB VALVES	TO OPEN		2.60E-05	IWX-EV4-SA
82	5.62E-11	.05	LOSS OF OFFSITE	POWER INITIATING	EVENT OCCURS	WITH RCS DRAINED	4.44E-03	IEV-LOSPD
			FAILURE TO	RECOVER AC POWER	IN 1 HOUR		4.20E-01	OTH-R1
			PLS LOGIC GROUP	PROCESSING	FAILURE UPON	DEMAND	1.16E-03	PL50301BSA
			CCF OF 6/6 IRWST	HP SQUIB VALVES	TO OPEN		2.60E-05	IWX-EV-SA

Table 54-5 (Sheet 10 of 25)

AP600 SHUTDOWN LEVEL 1 PRA TOP 200 CUTSETS

NUMBER	CUTSET PROB	PERCENT	BASIC EVENT NAME				EVENT PROB.	IDENTIFIER
83	5.62E-11	.05	LOSS OF OFFSITE	POWER INITIATING	EVENT OCCURS	WITH RCS DRAINED	4.44E-03	IEV-LOSPD
			FAILURE TO	RECOVER AC POWER	IN 1 HOUR		4.20E-01	OTH-R1
			PLS LOGIC GROUP	PROCESSING	FAILURE UPON	DEMAND	1.16E-03	PL50301BSA
			CCF OF 2/2 IRWST	LP SQUIB VALVES	TO OPEN		2.60E-05	IWX-EV4-SA
84	5.37E-11	.05	LOSS OF OFFSITE	POWER INITIATING	EVENT OCCURS	WITH RCS DRAINED	4.44E-03	IEV-LOSPD
			FAILURE TO	RECOVER AC POWER	IN 1 HOUR		4.20E-01	OTH-R1
			COMMON CAUSE	FAILURE	4KV BREAKERS TO	OPEN	1.20E-03	ECX-CB-GO
			COMMON CAUSE	FAILURE OF THE	INVERTER		2.40E-05	CCX-IV-XR
85	5.35E-11	.05	LOSS OF OFFSITE	POWER INITIATING	EVENT OCCURS	WITH RCS DRAINED	4.44E-03	IEV-LOSPD
			FAILURE TO	RECOVER AC POWER	IN 1 HOUR		4.20E-01	OTH-R1
			CCF TO OPEN	OF THE STOP	CHECK VALVES		6.10E-04	RNX-KV-GO
			COMMON CAUSE	FAILURE OF THE	BATTERIES	IDSA-DB-1A/1B	4.70E-05	CCX-BY-PN
86	5.22E-11	.05	LOSS OF CCS/SWS	WITH RCS FILLED	INITIATING EVENT	OCCURS	3.75E-03	IEV-CCWND
			SOFTWARE CCF	OF ALL CARDS			1.20E-06	CCX-SFTW
			FAILURE OF	MANUAL DAS	ACTUATION		1.16E-02	REC-MANDAS
87	5.19E-11	.05	LOSS OF OFFSITE	POWER INITIATING	EVENT OCCURS	WITH RCS DRAINED	4.44E-03	IEV-LOSPD
			FAILURE TO	RECOVER AC POWER	IN 1 HOUR		4.20E-01	OTH-R1
			PLS LOGIC GROUP	PROCESSING	FAILURE UPON	DEMAND	1.16E-03	PL50301ASA
			COMMON CAUSE	FAILURE OF THE	INVERTER		2.40E-05	CCX-IV-XR
88	5.19E-11	.05	LOSS OF OFFSITE	POWER INITIATING	EVENT OCCURS	WITH RCS DRAINED	4.44E-03	IEV-LOSPD
			FAILURE TO	RECOVER AC POWER	IN 1 HOUR		4.20E-01	OTH-R1
			PLS LOGIC GROUP	PROCESSING	FAILURE UPON	DEMAND	1.16E-03	PL50301BSA
			COMMON CAUSE	FAILURE OF THE	INVERTER		2.40E-05	CCX-IV-XR
89	5.19E-11	.05	LOSS OF CCS/SWS	WITH RCS DRAINED	INITIATING EVENT	OCCURS	6.02E-04	IEV-CCWD
			FAILURE OF	MANUAL DAS	REACTOR TRIP	HARDWARE	1.00E-02	MDAS
			CCF OF THE POWER	INTERFACE OUTPUT	BOARDS IN PMS		8.62E-06	CCX-EP-SAM
90	5.16E-11	.05	LOSS OF OFFSITE	POWER INITIATING	EVENT OCCURS	WITH RCS DRAINED	4.44E-03	IEV-LOSPD
			OFFSITE	AC POWER	RECOVERED IN	1 HOUR	5.80E-01	SUC-R1S
			CCF OF RNS PUMPS	P01A/B TO START			7.70E-04	RNX-PM-FS
			CCF OF 6/6 IRWST	HP SQUIB VALVES	TO OPEN		2.60E-05	IWX-EV-SA

Table 54-5 (Sheet 11 of 25)

AP600 SHUTDOWN LEVEL 1 PRA TOP 200 CUTSETS

NUMBER	CUTSET PROB	PERCENT	BASIC EVENT NAME				EVENT PROB.	IDENTIFIER
91	5.16E-11	.05	LOSS OF OFFSITE	POWER INITIATING	EVENT OCCURS	WITH RCS DRAINED	4.44E-03	IEV-LOSPD
			OFFSITE	AC POWER	RECOVERED IN	1 HOUR	5.80E-01	SUC-R1S
			CCF OF RNS PUMPS	P01A/B TO START			7.70E-04	RNX-PM-FS
			CCF OF 2/2 IRWST	LP SQUIB VALVES	TO OPEN		2.60E-05	IWX-EV4-SA
92	5.03E-11	.05	OVERDRAINING OF	RCS DURING DRAIN	DOWN TO MID-LOOP	INITIATING EVENT	4.44E-06	IEV-RCSOD
			OPERATOR SUCCEEDS	IN ISOLATING RNS	LEAK		9.45E-01	RHN-MAN04-SUCC
			CCF OF STRAINERS	IN IRWST TANK			1.20E-05	IWX-FL-GP
93	5.03E-11	.05	OVERDRAINING OF	RCS DURING DRAIN	DOWN TO MID-LOOP	INITIATING EVENT	4.44E-06	IEV-RCSOD
			OPERATOR SUCCEEDS	IN ISOLATING RNS	LEAK		9.45E-01	RHN-MAN04-SUCC
			CCF OF IRWST RECIRC	SUMP STRAINERS	PLUGGING		1.20E-05	REX-FL-GP
94	4.92E-11	.05	LOSS OF OFFSITE	POWER INITIATING	EVENT OCCURS	WITH RCS FILLED	1.71E-02	IEV-LOSPND
			FAILURE TO	RECOVER AC POWER	IN 2 HOURS		2.40E-01	OTH-R2
			SOFTWARE CCF	OF ALL CARDS			1.20E-06	CCX-SFTW
			FAILURE OF	MANUAL DAS	REACTOR TRIP	HARDWARE	1.00E-02	MDAS
95	4.71E-11	.05	LOSS OF OFFSITE	POWER INITIATING	EVENT OCCURS	WITH RCS DRAINED	4.44E-03	IEV-LOSPD
			OFFSITE	AC POWER	RECOVERED IN	1 HOUR	5.80E-01	SUC-R1S
			CCF TO OPEN	OF THE STOP	CHECK VALVES		6.10E-04	RNX-KV-GO
			CCF OF ADS 4TH	STAGE SQUIB VALVES	TO OPEN		3.00E-05	ADX-EV-SA
96	4.68E-11	.04	LOSS OF OFFSITE	POWER INITIATING	EVENT OCCURS	WITH RCS DRAINED	4.44E-03	IEV-LOSPD
			FAILURE TO	RECOVER AC POWER	IN 1 HOUR		4.20E-01	OTH-R1
			FAILURE OF	PLS OUTPUT	LOGIC I/Os		2.09E-03	PL5MOD11
			CCF OF STRAINERS	IN IRWST TANK			1.20E-05	IWX-FL-GP
97	4.68E-11	.04	LOSS OF OFFSITE	POWER INITIATING	EVENT OCCURS	WITH RCS DRAINED	4.44E-03	IEV-LOSPD
			FAILURE TO	RECOVER AC POWER	IN 1 HOUR		4.20E-01	OTH-R1
			FAILURE OF	PLS OUTPUT	LOGIC I/Os		2.09E-03	PL5MOD11
			CCF OF IRWST RECIRC	SUMP STRAINERS	PLUGGING		1.20E-05	REX-FL-GP
98	4.50E-11	.04	LOSS OF CCS/SWS	WITH RCS FILLED	INITIATING EVENT	OCCURS	3.75E-03	IEV-CCWND
			SOFTWARE CCF	OF ALL CARDS			1.20E-06	CCX-SFTW
			FAILURE OF	MANUAL DAS	REACTOR TRIP	HARDWARE	1.00E-02	MDAS

Table 54-5 (Sheet 12 of 25)

AP600 SHUTDOWN LEVEL 1 PRA TOP 200 CUTSETS

NUMBER	CUTSET PROB	PERCENT	BASIC EVENT NAME				EVENT PROB.	IDENTIFIER
99	4.48E-11	.04	LOSS OF OFFSITE	POWER INITIATING	EVENT OCCURS	WITH RCS DRAINED	4.44E-03	IEV-LOSPD
			FAILURE TO	RECOVER AC POWER	IN 1 HOUR		4.20E-01	OTH-R1
			CCF TO START	OF ENGINE-DRIVEN	FUEL PUMPS		2.00E-03	ZOX-PD-ES
			CCF OF STRAINERS	IN IRWST TANK			1.20E-05	IWX-FL-GP
100	4.48E-11	.04	LOSS OF OFFSITE	POWER INITIATING	EVENT OCCURS	WITH RCS DRAINED	4.44E-03	IEV-LOSPD
			FAILURE TO	RECOVER AC POWER	IN 1 HOUR		4.20E-01	OTH-R1
			CCF TO START	OF ENGINE-DRIVEN	FUEL PUMPS		2.00E-03	ZOX-PD-ES
			CCF OF IRWST RECIRC	SUMP STRAINERS	PLUGGING		1.20E-05	REX-FL-GP
101	4.46E-11	.04	LOSS OF CCS/SWS	WITH RCS DRAINED	INITIATING EVENT	OCCURS	6.02E-04	IEV-CCWD
			CCF OF ACTUATION	LOGIC GROUPS			4.63E-05	CCX-PMAMOD1X
			OPERATOR FAILS	TO RECOGNIZE	NEED AND TO OPEN	RNS MOV V023	1.60E-03	RHN-MAN05
102	4.42E-11	.04	LOSS OF OFFSITE	POWER INITIATING	EVENT OCCURS	WITH RCS DRAINED	4.44E-03	IEV-LOSPD
			FAILURE TO	RECOVER AC POWER	IN 1 HOUR		4.20E-01	OTH-R1
			FIXED COMPONENT	FAILURES			5.04E-04	ED1MOD01
			COMMON CAUSE	FAILURE OF THE	BATTERIES	IDSA-DB-1A/1B	4.70E-05	CCX-BY-PN
103	4.34E-11	.04	LOSS OF OFFSITE	POWER INITIATING	EVENT OCCURS	WITH RCS DRAINED	4.44E-03	IEV-LOSPD
			FAILURE TO	RECOVER AC POWER	IN 1 HOUR		4.20E-01	OTH-R1
			BATTERY	DB1	UNAVAILABLE		2.70E-03	ED1MOD03
			CCF OF THE POWER	INTERFACE OUTPUT	BOARDS IN PMS		8.62E-06	CCX-EP-SAM
104	4.33E-11	.04	LOSS OF CCS/SWS	WITH RCS DRAINED	INITIATING EVENT	OCCURS	6.02E-04	IEV-CCWD
			IRWST DISCHARGE	LINE "B"	STRAINER	PLUGGED	2.40E-04	IWB-PLUG
			BUS UNAVAILABLE	DUE TO TEST OR	CORRECTIVE	MAINTENANCE	3.00E-04	IDBBSDK1TM
105	4.33E-11	.04	LOSS OF CCS/SWS	WITH RCS DRAINED	INITIATING EVENT	OCCURS	6.02E-04	IEV-CCWD
			IRWST DISCHARGE	LINE "B"	STRAINER	PLUGGED	2.40E-04	IWB-PLUG
			BUS UNAVAILABLE	DUE TO TEST OR	CORRECTIVE	MAINTENANCE	3.00E-04	IDBBSDD1TM
106	4.33E-11	.04	LOSS OF CCS/SWS	WITH RCS DRAINED	INITIATING EVENT	OCCURS	6.02E-04	IEV-CCWD
			IRWST DISCHARGE	LINE "B"	STRAINER	PLUGGED	2.40E-04	IWB-PLUG
			BUS UNAVAILABLE	DUE TO TEST OR	CORRECTIVE	MAINTENANCE	3.00E-04	IDBBSDS1TM

Table 54-5 (Sheet 13 of 25)

AP600 SHUTDOWN LEVEL 1 PRA TOP 200 CUTSETS

NUMBER	CUTSET PROB	PERCENT	BASIC EVENT NAME				EVENT PROB.	IDENTIFIER
107	4.32E-11	.04	LOSS OF OFFSITE	POWER INITIATING	EVENT OCCURS	WITH RCS DRAINED	4.44E-03	IEV-LOSPD
			FAILURE TO	RECOVER AC POWER	IN 1 HOUR		4.20E-01	OTH-R1
			PUMP MP 01B	SEGMENT HARDWARE	FAILURE OR	DIVERTED FLOW	2.44E-02	SWBMOD02
			D/G FAILS TO	START & RUN OR	BKR 102 FAILS TO	CLOSE	2.02E-02	ZO1MOD01
			COMMON CAUSE	FAILURE OF THE	BATTERIES	IDSA-DB-1A/1B	4.70E-05	CCX-BY-PN
108	4.31E-11	.04	LOSS OF OFFSITE	POWER INITIATING	EVENT OCCURS	WITH RCS DRAINED	4.44E-03	IEV-LOSPD
			FAILURE TO	RECOVER AC POWER	IN 1 HOUR		4.20E-01	OTH-R1
			CCF OF RNS PUMPS	P01A/B TO START			7.70E-04	RNX-PM-FS
			CCF OF ADS 4TH STAGE SQUIB VALVES		TO OPEN		3.00E-05	ADX-EV-SA
109	4.10E-11	.04	LOCA/RNS-V024	OPENS INITIATING	EVENT OCCURS	WITH RCS DRAINED	1.13E-05	IEV-LOCA24D
			CCF OF ORIFICES				3.63E-06	CCX-ORY-SPX
110	4.08E-11	.04	LOSS OF OFFSITE	POWER INITIATING	EVENT OCCURS	WITH RCS DRAINED	4.44E-03	IEV-LOSPD
			OFFSITE	AC POWER	RECOVERED IN	1 HOUR	5.80E-01	SUC-R1S
			CCF TO OPEN	OF THE STOP	CHECK VALVES		6.10E-04	RNX-KV-GO
			CCF OF 2/2 IRWST	LP SQUIB VALVES	TO OPEN		2.60E-05	IWX-EV4-SA
111	4.08E-11	.04	LOSS OF OFFSITE	POWER INITIATING	EVENT OCCURS	WITH RCS DRAINED	4.44E-03	IEV-LOSPD
			OFFSITE	AC POWER	RECOVERED IN	1 HOUR	5.80E-01	SUC-R1S
			CCF TO OPEN	OF THE STOP	CHECK VALVES		6.10E-04	RNX-KV-GO
			CCF OF 6/6 IRWST	HP SQUIB VALVES	TO OPEN		2.60E-05	IWX-EV-SA
112	4.08E-11	.04	LOSS OF OFFSITE	POWER INITIATING	EVENT OCCURS	WITH RCS DRAINED	4.44E-03	IEV-LOSPD
			FAILURE TO	RECOVER AC POWER	IN 1 HOUR		4.20E-01	OTH-R1
			COMMON CAUSE	FAILURE	4KV BREAKER TO	CLOSE	7.30E-04	ECX-CB-GC
			CCF OF ADS 4TH STAGE SQUIB VALVES		TO OPEN		3.00E-05	ADX-EV-SA
113	3.99E-11	.04	LOSS OF CCS/SWS	WITH RCS DRAINED	INITIATING EVENT	OCCURS	6.02E-04	IEV-CCWD
			CCF OF GRAVITY	INJECTION CHECK	VALVES TO OPEN		3.00E-05	IWX-CV-AO
			MECHANICAL	FAILURE CAUSES	MOV 023 TO	FAIL-TO-OPEN	2.21E-03	RN23MOD5S
114	3.86E-11	.04	LOSS OF OFFSITE	POWER INITIATING	EVENT OCCURS	WITH RCS DRAINED	4.44E-03	IEV-LOSPD
			FAILURE TO	RECOVER AC POWER	IN 1 HOUR		4.20E-01	OTH-R1
			COMMON CAUSE	FAILURE	STANDBY DG TO	RUN	4.40E-04	ZOX-DG-DR
			COMMON CAUSE	FAILURE OF THE	BATTERIES	IDSA-DB-1A/1B	4.70E-05	CCX-BY-PN

Table 54-5 (Sheet 14 of 25)

AP600 SHUTDOWN LEVEL 1 PRA TOP 200 CUTSETS

NUMBER	CUTSET PROB	PERCENT	BASIC EVENT NAME				EVENT PROB.	IDENTIFIER
115	3.73E-11	.04	LOSS OF OFFSITE	POWER INITIATING	EVENT OCCURS	WITH RCS DRAINED	4.44E-03	IEV-LOSPD
			FAILURE TO	RECOVER AC POWER	IN 1 HOUR		4.20E-01	OTH-R1
			CCF OF RNS PUMPS	P01A/B TO START			7.70E-04	RNX-PM-FS
			CCF OF 6/6 IRWST	HP SQUIB VALVES	TO OPEN		2.60E-05	IWX-EV-SA
116	3.73E-11	.04	LOSS OF OFFSITE	POWER INITIATING	EVENT OCCURS	WITH RCS DRAINED	4.44E-03	IEV-LOSPD
			FAILURE TO	RECOVER AC POWER	IN 1 HOUR		4.20E-01	OTH-R1
			CCF OF RNS PUMPS	P01A/B TO START			7.70E-04	RNX-PM-FS
			CCF OF 2/2 IRWST	LP SQUIB VALVES	TO OPEN		2.60E-05	IWX-EV4-SA
117	3.58E-11	.03	LOSS OF OFFSITE	POWER INITIATING	EVENT OCCURS	WITH RCS DRAINED	4.44E-03	IEV-LOSPD
			FAILURE TO	RECOVER AC POWER	IN 1 HOUR		4.20E-01	OTH-R1
			D/G FAILS TO	START & RUN OR	BKR 102 FAILS TO	CLOSE	2.02E-02	Z01MOD01
			D/G FAILS TO	START & RUN OR	BKR 202 FAILS TO	CLOSE	2.02E-02	Z02MOD01
			COMMON CAUSE	FAILURE OF THE	BATTERIES	IDSA-DB-1A/1B	4.70E-05	CCX-BY-PN
118	3.54E-11	.03	LOSS OF OFFSITE	POWER INITIATING	EVENT OCCURS	WITH RCS DRAINED	4.44E-03	IEV-LOSPD
			FAILURE TO	RECOVER AC POWER	IN 1 HOUR		4.20E-01	OTH-R1
			COMMON CAUSE	FAILURE	4KV BREAKER TO	CLOSE	7.30E-04	ECX-CB-GC
			CCF OF 2/2 IRWST	LP SQUIB VALVES	TO OPEN		2.60E-05	IWX-EV4-SA
119	3.54E-11	.03	LOSS OF OFFSITE	POWER INITIATING	EVENT OCCURS	WITH RCS DRAINED	4.44E-03	IEV-LOSPD
			FAILURE TO	RECOVER AC POWER	IN 1 HOUR		4.20E-01	OTH-R1
			COMMON CAUSE	FAILURE	4KV BREAKER TO	CLOSE	7.30E-04	ECX-CB-GC
			CCF OF 6/6 IRWST	HP SQUIB VALVES	TO OPEN		2.60E-05	IWX-EV-SA
120	3.47E-11	.03	LOSS OF CCS/SWS	WITH RCS DRAINED	INITIATING EVENT	OCCURS	6.02E-04	IEV-CCWD
			SUMP SCREEN A PLUGS AND PREVENTS FLOW				2.40E-04	REA-PLUG
			SUMP SCREEN B PLUGS AND PREVENTS FLOW				2.40E-04	REB-PLUG
121	3.47E-11	.03	LOSS OF CCS/SWS	WITH RCS DRAINED	INITIATING EVENT	OCCURS	6.02E-04	IEV-CCWD
			IRWST DISCHARGE	LINE "A"	STRAINER	PLUGGED	2.40E-04	IWA-PLUG
			IRWST DISCHARGE	LINE "B"	STRAINER	PLUGGED	2.40E-04	IWB-PLUG
122	3.45E-11	.03	LOSS OF OFFSITE	POWER INITIATING	EVENT OCCURS	WITH RCS DRAINED	4.44E-03	IEV-LOSPD
			FAILURE TO	RECOVER AC POWER	IN 1 HOUR		4.20E-01	OTH-R1
			CCF OF RNS PUMPS	P01A/B TO START			7.70E-04	RNX-PM-FS
			COMMON CAUSE	FAILURE OF THE	INVERTER		2.40E-05	CCX-IV-XR

Table 54-5 (Sheet 15 of 25)

AP600 SHUTDOWN LEVEL 1 PRA TOP 200 CUTSETS

NUMBER	CUTSET PROB	PERCENT	BASIC EVENT NAME				EVENT PROB.	IDENTIFIER
123	3.42E-11	.03	LOSS OF RNS WITH	RCS FILLED	INITIATING EVENT OCCURS		9.61E-04	IEV-RNSND
			COND. PROB. OF	REC-MANDAS	(FAILURE OF MANUAL DAS ACTUATION)		5.06E-01	REC-MANDASC
			COMMON MODE	FAILURE OF INPUT	LOGIC GROUPS		1.03E-04	CCX-INPUT-LOGIC
			OPERATOR FAILS	TO RECOGNIZE THE	NEED FOR RCS	DEPRESSURIZATION	6.83E-04	LPM-MAN05
124	3.41E-11	.03	LOSS OF OFFSITE	POWER INITIATING	EVENT OCCURS	WITH RCS DRAINED	4.44E-03	IEV-LOSPD
			FAILURE TO	RECOVER AC POWER	IN 1 HOUR		4.20E-01	OTH-R1
			CCF TO OPEN	OF THE STOP	CHECK VALVES		6.10E-04	RNX-KV-GO
			CCF OF ADS 4TH STAGE SQUIB VALVES		TO OPEN		3.00E-05	ADX-EV-SA
125	3.38E-11	.03	LOCA/RNS-V024	OPENS INITIATING	EVENT OCCURS	WITH RCS FILLED	1.68E-05	IEV-LOCA24ND
			CCF OF IRWST TANK LEVEL TRANSMITTER				2.01E-04	IWX-XMTR
			OPERATOR FAILS TO ACTUATE SUMP RECIRC WHEN IRWST SIGNAL FAILS				1.00E-02	REN-MAN04
126	3.36E-11	.03	LOSS OF OFFSITE	POWER INITIATING	EVENT OCCURS	WITH RCS DRAINED	4.44E-03	IEV-LOSPD
			FAILURE TO	RECOVER AC POWER	IN 1 HOUR		4.20E-01	OTH-R1
			FAILURE OF	PLS OUTPUT	LOGIC I/Os		2.09E-03	PL5MOD11
			CCF OF THE POWER	INTERFACE OUTPUT	BOARDS IN PMS		8.62E-06	CCX-EP-SAM
127	3.27E-11	.03	LOSS OF OFFSITE	POWER INITIATING	EVENT OCCURS	WITH RCS DRAINED	4.44E-03	IEV-LOSPD
			FAILURE TO	RECOVER AC POWER	IN 1 HOUR		4.20E-01	OTH-R1
			COMMON CAUSE	FAILURE	4KV BREAKER TO	CLOSE	7.30E-04	ECX-CB-GC
			COMMON CAUSE	FAILURE OF THE	INVERTER		2.40E-05	CCX-IV-XR
128	3.21E-11	.03	LOSS OF OFFSITE	POWER INITIATING	EVENT OCCURS	WITH RCS DRAINED	4.44E-03	IEV-LOSPD
			FAILURE TO	RECOVER AC POWER	IN 1 HOUR		4.20E-01	OTH-R1
			CCF TO START	OF ENGINE-DRIVEN	FUEL PUMPS		2.00E-03	ZOX-PD-ES
			CCF OF THE POWER	INTERFACE OUTPUT	BOARDS IN PMS		8.62E-06	CCX-EP-SAM
129	2.97E-11	.03	LOCA/RNS-V024	OPENS INITIATING	EVENT OCCURS	WITH RCS DRAINED	1.13E-05	IEV-LOCA24D
			CCF OF PRESSURE	TRANSMITTERS			2.63E-06	CCX-XMTRX
130	2.96E-11	.03	LOSS OF OFFSITE	POWER INITIATING	EVENT OCCURS	WITH RCS DRAINED	4.44E-03	IEV-LOSPD
			FAILURE TO	RECOVER AC POWER	IN 1 HOUR		4.20E-01	OTH-R1
			CCF TO OPEN	OF THE STOP	CHECK VALVES		6.10E-04	RNX-KV-GO
			CCF OF 6/6 IRWST HP SQUIB VALVES		TO OPEN		2.60E-05	IWX-EV-SA

Table 54-5 (Sheet 16 of 25)

AP600 SHUTDOWN LEVEL 1 PRA TOP 200 CUTSETS

NUMBER	CUTSET PROB	PERCENT	BASIC EVENT NAME				EVENT PROB.	IDENTIFIER
131	2.96E-11	.03	LOSS OF OFFSITE	POWER INITIATING	EVENT OCCURS	WITH RCS DRAINED	4.44E-03	IEV-LOSPD
			FAILURE TO	RECOVER AC POWER	IN 1 HOUR		4.20E-01	OTH-R1
			CCF TO OPEN	OF THE STOP	CHECK VALVES		6.10E-04	RNX-KV-GO
			CCF OF 2/2 IRWST	LP SQUIB VALVES	TO OPEN		2.60E-05	IWX-EV4-SA
132	2.89E-11	.03	LOSS OF CCS/SWS	WITH RCS DRAINED	INITIATING EVENT	OCCURS	6.02E-04	IEV-CCWD
			CCF OF GRAVITY	INJECTION CHECK	VALVES TO OPEN		3.00E-05	IWX-CV-AO
			OPERATOR FAILS	TO RECOGNIZE	NEED AND TO OPEN	RNS MOV V023	1.60E-03	RHN-MAN05
133	2.82E-11	.03	LOSS OF OFFSITE	POWER INITIATING	EVENT OCCURS	WITH RCS DRAINED	4.44E-03	IEV-LOSPD
			FAILURE TO	RECOVER AC POWER	IN 1 HOUR		4.20E-01	OTH-R1
			FIXED COMPONENT	FAILURES			5.04E-04	ED1MOD01
			CCF OF ADS 4TH	STAGE SQUIB VALVES	TO OPEN		3.00E-05	ADX-EV-SA
134	2.78E-11	.03	LOSS OF OFFSITE	POWER INITIATING	EVENT OCCURS	WITH RCS DRAINED	4.44E-03	IEV-LOSPD
			FAILURE TO	RECOVER AC POWER	IN 1 HOUR		4.20E-01	OTH-R1
			FIXED	COMPONENTS	FAILURE		3.17E-04	ED1MOD113
			COMMON CAUSE	FAILURE OF THE	BATTERIES	IDSA-DB-1A/1B	4.70E-05	CCX-BY-PN
135	2.78E-11	.03	LOSS OF OFFSITE	POWER INITIATING	EVENT OCCURS	WITH RCS DRAINED	4.44E-03	IEV-LOSPD
			FAILURE TO	RECOVER AC POWER	IN 1 HOUR		4.20E-01	OTH-R1
			FIXED	COMPONENTS	FAILURE		3.17E-04	ED1MOD11
			COMMON CAUSE	FAILURE OF THE	BATTERIES	IDSA-DB-1A/1B	4.70E-05	CCX-BY-PN
136	2.78E-11	.03	LOSS OF OFFSITE	POWER INITIATING	EVENT OCCURS	WITH RCS DRAINED	4.44E-03	IEV-LOSPD
			FAILURE TO	RECOVER AC POWER	IN 1 HOUR		4.20E-01	OTH-R1
			FIXED	COMPONENTS	FAILURE		3.17E-04	ED1MOD13
			COMMON CAUSE	FAILURE OF THE	BATTERIES	IDSA-DB-1A/1B	4.70E-05	CCX-BY-PN
137	2.76E-11	.03	LOSS OF OFFSITE	POWER INITIATING	EVENT OCCURS	WITH RCS DRAINED	4.44E-03	IEV-LOSPD
			FAILURE TO	RECOVER AC POWER	IN 1 HOUR		4.20E-01	OTH-R1
			PUMP MP 01B	SEGMENT HARDWARE	FAILURE OR	DIVERTED FLOW	2.44E-02	SWBMOD02
			D/G FAILS TO	START & RUN OR	BKR 102 FAILS TO	CLOSE	2.02E-02	ZO1MOD01
			CCF OF ADS 4TH	STAGE SQUIB VALVES	TO OPEN		3.00E-05	ADX-EV-SA
138	2.73E-11	.03	LOSS OF OFFSITE	POWER INITIATING	EVENT OCCURS	WITH RCS DRAINED	4.44E-03	IEV-LOSPD
			FAILURE TO	RECOVER AC POWER	IN 1 HOUR		4.20E-01	OTH-R1
			CCF TO OPEN	OF THE STOP	CHECK VALVES		6.10E-04	RNX-KV-GO
			COMMON CAUSE	FAILURE OF THE	INVERTER		2.40E-05	CCX-IV-XR

Table 54-5 (Sheet 17 of 25)

AP600 SHUTDOWN LEVEL 1 PRA TOP 200 CUTSETS

NUMBER	CUTSET PROB	PERCENT	BASIC EVENT NAME				EVENT PROB.	IDENTIFIER
139	2.71E-11	.03	LOSS OF OFFSITE	POWER INITIATING	EVENT OCCURS	WITH RCS DRAINED	4.44E-03	IEV-LOSPD
			FAILURE TO	RECOVER AC POWER	IN 1 HOUR		4.20E-01	OTH-R1
			PUMP 01B FAILS &	ST CK V007B & C	B FTC & RE FTC &	CB ECS221 SPO	1.53E-02	RNBMOD07S
			D/G FAILS TO	START & RUN OR	BKR 102 FAILS TO	CLOSE	2.02E-02	ZO1MOD01
			COMMON CAUSE	FAILURE OF THE	BATTERIES	IDSA-DB-1A/1B	4.70E-05	CCX-BY-PN
140	2.71E-11	.03	LOSS OF OFFSITE	POWER INITIATING	EVENT OCCURS	WITH RCS DRAINED	4.44E-03	IEV-LOSPD
			FAILURE TO	RECOVER AC POWER	IN 1 HOUR		4.20E-01	OTH-R1
			PUMP 01A FAILS;	STOP CK V007A,	CB & RELAY FTC;	CB ECS122 SPO	1.53E-02	RNAMOD06S
			D/G FAILS TO	START & RUN OR	BKR 202 FAILS TO	CLOSE	2.02E-02	ZO2MOD01
			COMMON CAUSE	FAILURE OF THE	BATTERIES	IDSA-DB-1A/1B	4.70E-05	CCX-BY-PN
141	2.70E-11	.03	OVERDRAINING OF	RCS DURING DRAIN	DOWN TO MID-LOOP	INITIATING EVENT	4.44E-06	IEV-RCSOD
			OPERATOR FAILS	TO ISOLATE	RNS PIPE RUPTURE		5.50E-02	RHN-MAN04
			COND. PROB. OF	IWN-MAN00 (OP.	FAILS TO ACTUATE	IRWST INJ)	5.00E-02	IWN-MAN00C
			MECHANICAL	FAILURE CAUSES	MOV 023 TO	FAIL-TO-OPEN	2.21E-03	RN23MOD5S
142	2.69E-11	.03	LOSS OF OFFSITE	POWER INITIATING	EVENT OCCURS	WITH RCS DRAINED	4.44E-03	IEV-LOSPD
			FAILURE TO	RECOVER AC POWER	IN 1 HOUR		4.20E-01	OTH-R1
			COMMON CAUSE	FAILURE	4KV BREAKERS TO	OPEN	1.20E-03	ECX-CB-GO
			CCF OF IRWST RECIRC	SUMP STRAINERS	PLUGGING		1.20E-05	REX-FL-GP
143	2.69E-11	.03	LOSS OF OFFSITE	POWER INITIATING	EVENT OCCURS	WITH RCS DRAINED	4.44E-03	IEV-LOSPD
			FAILURE TO	RECOVER AC POWER	IN 1 HOUR		4.20E-01	OTH-R1
			COMMON CAUSE	FAILURE	4KV BREAKERS TO	OPEN	1.20E-03	ECX-CB-GO
			CCF OF STRAINERS	IN IRWST TANK			1.20E-05	IWX-FL-GP
144	2.67E-11	.03	LOSS OF OFFSITE	POWER INITIATING	EVENT OCCURS	WITH RCS DRAINED	4.44E-03	IEV-LOSPD
			FAILURE TO	RECOVER AC POWER	IN 1 HOUR		4.20E-01	OTH-R1
			EDS1 EA 1 DISTR.	PNL FAILURE OR	T&M		3.05E-04	ED1MOD07
			COMMON CAUSE	FAILURE OF THE	BATTERIES	IDSA-DB-1A/1B	4.70E-05	CCX-BY-PN
145	2.63E-11	.03	LOSS OF OFFSITE	POWER INITIATING	EVENT OCCURS	WITH RCS DRAINED	4.44E-03	IEV-LOSPD
			FAILURE TO	RECOVER AC POWER	IN 1 HOUR		4.20E-01	OTH-R1
			PUMP MP 01B	SEGMENT HARDWARE	FAILURE OR	DIVERTED FLOW	2.44E-02	SWBMOD02
			BREAKER 100	FAILS TO OPEN		[#3,5]	1.23E-02	EC1CB100VO
			COMMON CAUSE	FAILURE OF THE	BATTERIES	IDSA-DB-1A/1B	4.70E-05	CCX-BY-PN

Table 54-5 (Sheet 18 of 25)

AP600 SHUTDOWN LEVEL 1 PRA TOP 200 CUTSETS

NUMBER	CUTSET PROB	PERCENT	BASIC EVENT NAME				EVENT PROB.	IDENTIFIER
146	2.60E-11	.02	LOSS OF OFFSITE	POWER INITIATING	EVENT OCCURS	WITH RCS DRAINED	4.44E-03	IEV-LOSPD
			FAILURE TO	RECOVER AC POWER	IN 1 HOUR		4.20E-01	OTH-R1
			PLS LOGIC GROUP	PROCESSING	FAILURE UPON	DEMAND	1.16E-03	PL50301BSA
			CCF OF IRWST RECIRC SUMP STRAINERS PLUGGING				1.20E-05	REX-FL-GP
147	2.60E-11	.02	LOSS OF OFFSITE	POWER INITIATING	EVENT OCCURS	WITH RCS DRAINED	4.44E-03	IEV-LOSPD
			FAILURE TO	RECOVER AC POWER	IN 1 HOUR		4.20E-01	OTH-R1
			PLS LOGIC GROUP	PROCESSING	FAILURE UPON	DEMAND	1.16E-03	PL50301ASA
			CCF OF STRAINERS IN IRWST TANK				1.20E-05	IWX-FL-GP
148	2.60E-11	.02	LOSS OF OFFSITE	POWER INITIATING	EVENT OCCURS	WITH RCS DRAINED	4.44E-03	IEV-LOSPD
			FAILURE TO	RECOVER AC POWER	IN 1 HOUR		4.20E-01	OTH-R1
			PLS LOGIC GROUP	PROCESSING	FAILURE UPON	DEMAND	1.16E-03	PL50301ASA
			CCF OF IRWST RECIRC SUMP STRAINERS PLUGGING				1.20E-05	REX-FL-GP
149	2.60E-11	.02	LOSS OF OFFSITE	POWER INITIATING	EVENT OCCURS	WITH RCS DRAINED	4.44E-03	IEV-LOSPD
			FAILURE TO	RECOVER AC POWER	IN 1 HOUR		4.20E-01	OTH-R1
			PLS LOGIC GROUP	PROCESSING	FAILURE UPON	DEMAND	1.16E-03	PL50301BSA
			CCF OF STRAINERS IN IRWST TANK				1.20E-05	IWX-FL-GP
150	2.49E-11	.02	LOCA/RNS PIPE	RUPTURE WITH RCS	FILLED INIT.	EVENT OCCURS	1.51E-05	IEV-LOCAPRND
			OPERATOR FAILS	TO ISOLATE	RNS PIPE RUPTURE		5.50E-02	RHN-MAN04
			CCF OF ADS 4TH STAGE SQUIB VALVES TO OPEN				3.00E-05	ADX-EV-SA
151	2.49E-11	.02	LOCA/RNS PIPE	RUPTURE WITH RCS	FILLED INIT.	EVENT OCCURS	1.51E-05	IEV-LOCAPRND
			OPERATOR FAILS	TO ISOLATE	RNS PIPE RUPTURE		5.50E-02	RHN-MAN04
			CCF OF GRAVITY	INJECTION CHECK	VALVES TO OPEN		3.00E-05	IWX-CV-AO
152	2.46E-11	.02	LOSS OF OFFSITE	POWER INITIATING	EVENT OCCURS	WITH RCS DRAINED	4.44E-03	IEV-LOSPD
			FAILURE TO	RECOVER AC POWER	IN 1 HOUR		4.20E-01	OTH-R1
			COMMON CAUSE	FAILURE	STANDBY DG TO	RUN	4.40E-04	ZOX-DG-DR
			CCF OF ADS 4TH STAGE SQUIB VALVES TO OPEN				3.00E-05	ADX-EV-SA
153	2.45E-11	.02	LOSS OF OFFSITE	POWER INITIATING	EVENT OCCURS	WITH RCS DRAINED	4.44E-03	IEV-LOSPD
			FAILURE TO	RECOVER AC POWER	IN 1 HOUR		4.20E-01	OTH-R1
			COMMON CAUSE	FAILURE	STANDBY DG TO	START	2.80E-04	ZOX-DG-DS
			COMMON CAUSE	FAILURE OF THE	BATTERIES	IDSA-DB-1A/1B	4.70E-05	CCX-BY-PN

Table 54-5 (Sheet 19 of 25)

AP600 SHUTDOWN LEVEL 1 PRA TOP 200 CUTSETS

NUMBER	CUTSET PROB	PERCENT	BASIC EVENT NAME				EVENT PROB.	IDENTIFIER
154	2.44E-11	.02	LOSS OF OFFSITE	POWER INITIATING	EVENT OCCURS	WITH RCS DRAINED	4.44E-03	IEV-LOSPD
			FAILURE TO	RECOVER AC POWER	IN 1 HOUR		4.20E-01	OTH-R1
			FIXED COMPONENT	FAILURES			5.04E-04	ED1MOD01
			CCF OF 6/6 IRWST	HP SQUIB VALVES	TO OPEN		2.60E-05	IWX-EV-SA
155	2.44E-11	.02	LOSS OF OFFSITE	POWER INITIATING	EVENT OCCURS	WITH RCS DRAINED	4.44E-03	IEV-LOSPD
			FAILURE TO	RECOVER AC POWER	IN 1 HOUR		4.20E-01	OTH-R1
			FIXED COMPONENT	FAILURES			5.04E-04	ED1MOD01
			CCF OF 2/2 IRWST	LP SQUIB VALVES	TO OPEN		2.60E-05	IWX-EV4-SA
156	2.39E-11	.02	LOSS OF OFFSITE	POWER INITIATING	EVENT OCCURS	WITH RCS DRAINED	4.44E-03	IEV-LOSPD
			FAILURE TO	RECOVER AC POWER	IN 1 HOUR		4.20E-01	OTH-R1
			PUMP MP 01B	SEGMENT HARDWARE	FAILURE OR	DIVERTED FLOW	2.44E-02	SWBMOD02
			D/G FAILS TO	START & RUN OR	BKR 102 FAILS TO	CLOSE	2.02E-02	ZO1MOD01
			CCF OF 6/6 IRWST	HP SQUIB VALVES	TO OPEN		2.60E-05	IWX-EV-SA
157	2.39E-11	.02	LOSS OF OFFSITE	POWER INITIATING	EVENT OCCURS	WITH RCS DRAINED	4.44E-03	IEV-LOSPD
			FAILURE TO	RECOVER AC POWER	IN 1 HOUR		4.20E-01	OTH-R1
			PUMP MP 01B	SEGMENT HARDWARE	FAILURE OR	DIVERTED FLOW	2.44E-02	SWBMOD02
			D/G FAILS TO	START & RUN OR	BKR 102 FAILS TO	CLOSE	2.02E-02	ZO1MOD01
			CCF OF 2/2 IRWST	LP SQUIB VALVES	TO OPEN		2.60E-05	IWX-EV4-SA
158	2.38E-11	.02	LOSS OF OFFSITE	POWER INITIATING	EVENT OCCURS	WITH RCS DRAINED	4.44E-03	IEV-LOSPD
			OFFSITE	AC POWER	RECOVERED IN	1 HOUR	5.80E-01	SUC-R1S
			CCF OF RNS PUMPS	P01A/B TO START			7.70E-04	RNX-PM-FS
			CCF OF STRAINERS	IN IRWST TANK			1.20E-05	IWX-FL-GP
159	2.38E-11	.02	LOSS OF OFFSITE	POWER INITIATING	EVENT OCCURS	WITH RCS DRAINED	4.44E-03	IEV-LOSPD
			OFFSITE	AC POWER	RECOVERED IN	1 HOUR	5.80E-01	SUC-R1S
			CCF OF RNS PUMPS	P01A/B TO START			7.70E-04	RNX-PM-FS
			CCF OF IRWST RECI	RC SUMP STRAINERS	PLUGGING		1.20E-05	REX-FL-GP
160	2.33E-11	.02	LOSS OF OFFSITE	POWER INITIATING	EVENT OCCURS	WITH RCS DRAINED	4.44E-03	IEV-LOSPD
			FAILURE TO	RECOVER AC POWER	IN 1 HOUR		4.20E-01	OTH-R1
			BATTERY	DB1	UNAVAILABLE		2.70E-03	ED1MOD03
			FAILURE OF	PMS OUTPUT	LOGIC I/Os		2.09E-03	PMAMOD11
			MECHANICAL	FAILURE CAUSES	MOV 023 TO	FAIL-TO-OPEN	2.21E-03	RN23MOD5S

Table 54-5 (Sheet 20 of 25)

AP600 SHUTDOWN LEVEL 1 PRA TOP 200 CUTSETS

NUMBER	CUTSET PROB	PERCENT	BASIC EVENT NAME				EVENT PROB.	IDENTIFIER
161	2.28E-11	.02	LOSS OF OFFSITE	POWER INITIATING	EVENT OCCURS	WITH RCS DRAINED	4.44E-03	IEV-LOSPD
			FAILURE TO	RECOVER AC POWER	IN 1 HOUR		4.20E-01	OTH-R1
			D/G FAILS TO	START & RUN OR	BKR 102 FAILS TO CLOSE		2.02E-02	ZO1MOD01
			D/G FAILS TO	START & RUN OR	BKR 202 FAILS TO CLOSE		2.02E-02	ZO2MOD01
			CCF OF ADS 4TH STAGE SQUIB VALVES TO OPEN				3.00E-05	ADX-EV-SA
162	2.27E-11	.02	LOCA/RNS-V024	OPENS INITIATING	EVENT OCCURS	WITH RCS DRAINED	1.13E-05	IEV-LOCA24D
			CCF OF IRWST TANK LEVEL TRANSMITTER				2.01E-04	IWX-XMTR
			OPERATOR FAILS TO ACTUATE SUMP RECIRC WHEN IRWST SIGNAL FAILS				1.00E-02	REN-MAN04
163	2.26E-11	.02	LOSS OF OFFSITE	POWER INITIATING	EVENT OCCURS	WITH RCS DRAINED	4.44E-03	IEV-LOSPD
			FAILURE TO	RECOVER AC POWER	IN 1 HOUR		4.20E-01	OTH-R1
			FIXED COMPONENT	FAILURES			5.04E-04	ED1MOD01
			COMMON CAUSE	FAILURE OF THE	INVERTER		2.40E-05	CCX-IV-XR
164	2.21E-11	.02	LOSS OF OFFSITE	POWER INITIATING	EVENT OCCURS	WITH RCS DRAINED	4.44E-03	IEV-LOSPD
			FAILURE TO	RECOVER AC POWER	IN 1 HOUR		4.20E-01	OTH-R1
			PUMP MP 01B	SEGMENT HARDWARE	FAILURE OR	DIVERTED FLOW	2.44E-02	SWBMOD02
			D/G FAILS TO	START & RUN OR	BKR 102 FAILS TO CLOSE		2.02E-02	ZO1MOD01
			COMMON CAUSE	FAILURE OF THE	INVERTER		2.40E-05	CCX-IV-XR
165	2.18E-11	.02	LOSS OF OFFSITE	POWER INITIATING	EVENT OCCURS	WITH RCS DRAINED	4.44E-03	IEV-LOSPD
			FAILURE TO	RECOVER AC POWER	IN 1 HOUR		4.20E-01	OTH-R1
			D/G FAILS TO	START & RUN OR	BKR 102 FAILS TO CLOSE		2.02E-02	ZO1MOD01
			BREAKER 200	FAILS TO OPEN		[#5,3]	1.23E-02	EC2CB200VO
			COMMON CAUSE	FAILURE OF THE	BATTERIES	IDSA-DB-1A/1B	4.70E-05	CCX-BY-PN
166	2.18E-11	.02	LOSS OF OFFSITE	POWER INITIATING	EVENT OCCURS	WITH RCS DRAINED	4.44E-03	IEV-LOSPD
			FAILURE TO	RECOVER AC POWER	IN 1 HOUR		4.20E-01	OTH-R1
			BREAKER 100	FAILS TO OPEN		[#3,5]	1.23E-02	EC1CB100VO
			D/G FAILS TO	START & RUN OR	BKR 202 FAILS TO CLOSE		2.02E-02	ZO2MOD01
			COMMON CAUSE	FAILURE OF THE	BATTERIES	IDSA-DB-1A/1B	4.70E-05	CCX-BY-PN
167	2.16E-11	.02	LOCA/RNS PIPE	RUPTURE WITH RCS	FILLED INIT.	EVENT OCCURS	1.51E-05	IEV-LOCAPRND
			OPERATOR FAILS	TO ISOLATE	RNS PIPE RUPTURE		5.50E-02	RHN-MAN04
			CCF OF 2/2 IRWST LP SQUIB VALVES TO OPEN				2.60E-05	IWX-EV4-SA

Table 54-5 (Sheet 21 of 25)

AP600 SHUTDOWN LEVEL 1 PRA TOP 200 CUTSETS

NUMBER	CUTSET PROB	PERCENT	BASIC EVENT NAME				EVENT PROB.	IDENTIFIER
168	2.13E-11	.02	LOSS OF OFFSITE	POWER INITIATING	EVENT OCCURS	WITH RCS DRAINED	4.44E-03	IEV-LOSPD
			FAILURE TO	RECOVER AC POWER	IN 1 HOUR		4.20E-01	OTH-R1
			COMMON CAUSE	FAILURE	STANDBY DG TO	RUN	4.40E-04	ZOX-DG-DR
			CCF OF 6/6 IRWST	HP SQUIB VALVES	TO OPEN		2.60E-05	IWX-EV-SA
169	2.13E-11	.02	LOSS OF OFFSITE	POWER INITIATING	EVENT OCCURS	WITH RCS DRAINED	4.44E-03	IEV-LOSPD
			FAILURE TO	RECOVER AC POWER	IN 1 HOUR		4.20E-01	OTH-R1
			COMMON CAUSE	FAILURE	STANDBY DG TO	RUN	4.40E-04	ZOX-DG-DR
			CCF OF 2/2 IRWST	LP SQUIB VALVES	TO OPEN		2.60E-05	IWX-EV4-SA
170	2.05E-11	.02	LOSS OF OFFSITE	POWER INITIATING	EVENT OCCURS	WITH RCS DRAINED	4.44E-03	IEV-LOSPD
			FAILURE TO	RECOVER AC POWER	IN 1 HOUR		4.20E-01	OTH-R1
			PUMP 01A FAILS;	STOP CK V007A,	CB & RELAY FTC;	CB ECS122 SPO	1.53E-02	RNAMOD06S
			PUMP 01B FAILS &	ST CK V007B & C	B FTC & RE FTC &	CB ECS221 SPO	1.53E-02	RNBMOD07S
			COMMON CAUSE	FAILURE OF THE	BATTERIES	IDSA-DB-1A/1B	4.70E-05	CCX-BY-PN
171	1.98E-11	.02	LOSS OF OFFSITE	POWER INITIATING	EVENT OCCURS	WITH RCS DRAINED	4.44E-03	IEV-LOSPD
			FAILURE TO	RECOVER AC POWER	IN 1 HOUR		4.20E-01	OTH-R1
			D/G FAILS TO	START & RUN OR	BKR 102 FAILS TO	CLOSE	2.02E-02	ZO1MOD01
			D/G FAILS TO	START & RUN OR	BKR 202 FAILS TO	CLOSE	2.02E-02	ZO2MOD01
			CCF OF 2/2 IRWST	LP SQUIB VALVES	TO OPEN		2.60E-05	IWX-EV4-SA
172	1.98E-11	.02	LOSS OF OFFSITE	POWER INITIATING	EVENT OCCURS	WITH RCS DRAINED	4.44E-03	IEV-LOSPD
			FAILURE TO	RECOVER AC POWER	IN 1 HOUR		4.20E-01	OTH-R1
			D/G FAILS TO	START & RUN OR	BKR 102 FAILS TO	CLOSE	2.02E-02	ZO1MOD01
			D/G FAILS TO	START & RUN OR	BKR 202 FAILS TO	CLOSE	2.02E-02	ZO2MOD01
			CCF OF 6/6 IRWST	HP SQUIB VALVES	TO OPEN		2.60E-05	IWX-EV-SA
173	1.97E-11	.02	LOSS OF OFFSITE	POWER INITIATING	EVENT OCCURS	WITH RCS DRAINED	4.44E-03	IEV-LOSPD
			FAILURE TO	RECOVER AC POWER	IN 1 HOUR		4.20E-01	OTH-R1
			COMMON CAUSE	FAILURE	STANDBY DG TO	RUN	4.40E-04	ZOX-DG-DR
			COMMON CAUSE	FAILURE OF THE	INVERTER		2.40E-05	CCX-IV-XR
174	1.93E-11	.02	LOSS OF OFFSITE	POWER INITIATING	EVENT OCCURS	WITH RCS DRAINED	4.44E-03	IEV-LOSPD
			FAILURE TO	RECOVER AC POWER	IN 1 HOUR		4.20E-01	OTH-R1
			COMMON CAUSE	FAILURE	4KV BREAKERS TO	OPEN	1.20E-03	ECX-CB-GO
			CCF OF THE POWER	INTERFACE OUTPUT	BOARDS IN PMS		8.62E-06	CCX-EP-SAM

Table 54-5 (Sheet 22 of 25)

AP600 SHUTDOWN LEVEL 1 PRA TOP 200 CUTSETS

NUMBER	CUTSET PROB	PERCENT	BASIC EVENT NAME				EVENT PROB.	IDENTIFIER
175	1.89E-11	.02	LOSS OF OFFSITE	POWER INITIATING	EVENT OCCURS	WITH RCS DRAINED	4.44E-03	IEV-LOSPD
			OFFSITE	AC POWER	RECOVERED IN	1 HOUR	5.80E-01	SUC-R1S
			CCF TO OPEN	OF THE STOP	CHECK VALVES		6.10E-04	RNX-KV-GO
			CCF OF IRWST RECIRC	SUMP STRAINERS	PLUGGING		1.20E-05	REX-FL-GP
176	1.89E-11	.02	LOSS OF OFFSITE	POWER INITIATING	EVENT OCCURS	WITH RCS DRAINED	4.44E-03	IEV-LOSPD
			OFFSITE	AC POWER	RECOVERED IN	1 HOUR	5.80E-01	SUC-R1S
			CCF TO OPEN	OF THE STOP	CHECK VALVES		6.10E-04	RNX-KV-GO
			CCF OF STRAINERS	IN IRWST TANK			1.20E-05	IWX-FL-GP
177	1.86E-11	.02	LOSS OF OFFSITE	POWER INITIATING	EVENT OCCURS	WITH RCS DRAINED	4.44E-03	IEV-LOSPD
			FAILURE TO	RECOVER AC POWER	IN 1 HOUR		4.20E-01	OTH-R1
			PLS LOGIC GROUP	PROCESSING	FAILURE UPON	DEMAND	1.16E-03	PL50301BSA
			CCF OF THE POWER	INTERFACE OUTPUT	BOARDS IN PMS		8.62E-06	CCX-EP-SAM
178	1.86E-11	.02	LOSS OF OFFSITE	POWER INITIATING	EVENT OCCURS	WITH RCS DRAINED	4.44E-03	IEV-LOSPD
			FAILURE TO	RECOVER AC POWER	IN 1 HOUR		4.20E-01	OTH-R1
			PLS LOGIC GROUP	PROCESSING	FAILURE UPON	DEMAND	1.16E-03	PL50301ASA
			CCF OF THE POWER	INTERFACE OUTPUT	BOARDS IN PMS		8.62E-06	CCX-EP-SAM
179	1.84E-11	.02	LOSS OF OFFSITE	POWER INITIATING	EVENT OCCURS	WITH RCS DRAINED	4.44E-03	IEV-LOSPD
			FAILURE TO	RECOVER AC POWER	IN 1 HOUR		4.20E-01	OTH-R1
			PUMP SUBLOOP B	HARDWARE FAILURE	OR DIVERTED FLOW		1.04E-02	CCBMOD01S
			D/G FAILS TO	START & RUN OR	BKR 102 FAILS TO	CLOSE	2.02E-02	ZO1MOD01
			COMMON CAUSE	FAILURE OF THE	BATTERIES	IDSA-DB-1A/1B	4.70E-05	CCX-BY-PN
180	1.84E-11	.02	LOSS OF CCS/SWS	WITH RCS DRAINED	INITIATING EVENT	OCCURS	6.02E-04	IEV-CCWD
			CCF OF LOGIC	GROUP PROCESSING			1.38E-05	CCX-PMA030X
			MECHANICAL	FAILURE CAUSES	MOV 023 TO	FAIL-TO-OPEN	2.21E-03	RN23MOD5S
181	1.83E-11	.02	LOSS OF OFFSITE	POWER INITIATING	EVENT OCCURS	WITH RCS DRAINED	4.44E-03	IEV-LOSPD
			FAILURE TO	RECOVER AC POWER	IN 1 HOUR		4.20E-01	OTH-R1
			BATTERY	DB1	UNAVAILABLE		2.70E-03	ED1MOD03
			CCF OF ORIFICES				3.63E-06	CCX-ORY-SPX
182	1.83E-11	.02	LOSS OF OFFSITE	POWER INITIATING	EVENT OCCURS	WITH RCS DRAINED	4.44E-03	IEV-LOSPD
			FAILURE TO	RECOVER AC POWER	IN 1 HOUR		4.20E-01	OTH-R1
			D/G FAILS TO	START & RUN OR	BKR 102 FAILS TO	CLOSE	2.02E-02	ZO1MOD01
			D/G FAILS TO	START & RUN OR	BKR 202 FAILS TO	CLOSE	2.02E-02	ZO2MOD01
			COMMON CAUSE	FAILURE OF THE	INVERTER		2.40E-05	CCX-IV-XR

Table 54-5 (Sheet 23 of 25)

AP600 SHUTDOWN LEVEL 1 PRA TOP 200 CUTSETS

NUMBER	CUTSET PROB	PERCENT	BASIC EVENT NAME				EVENT PROB.	IDENTIFIER
183	1.81E-11	.02	LOSS OF OFFSITE	POWER INITIATING	EVENT OCCURS	WITH RCS DRAINED	4.44E-03	IEV-LOSPD
			OFFSITE	AC POWER	RECOVERED IN	1 HOUR	5.80E-01	SUC-R1S
			PUMP 01A FAILS;	STOP CK V007A,	CB & RELAY FTC;	CB ECS122 SPO	1.53E-02	RNAMOD06S
			PUMP 01B FAILS &	ST CK V007B & C	B FTC & RE FTC &	CB ECS221 SPO	1.53E-02	RNBMOD07S
			CCF OF ADS 4TH STAGE SQUIB VALVES		TO OPEN		3.00E-05	ADX-EV-SA
184	1.77E-11	.02	LOSS OF OFFSITE	POWER INITIATING	EVENT OCCURS	WITH RCS DRAINED	4.44E-03	IEV-LOSPD
			FAILURE TO	RECOVER AC POWER	IN 1 HOUR		4.20E-01	OTH-R1
			FIXED	COMPONENTS	FAILURE		3.17E-04	ED1MOD13
			CCF OF ADS 4TH STAGE SQUIB VALVES		TO OPEN		3.00E-05	ADX-EV-SA
185	1.77E-11	.02	LOSS OF OFFSITE	POWER INITIATING	EVENT OCCURS	WITH RCS DRAINED	4.44E-03	IEV-LOSPD
			FAILURE TO	RECOVER AC POWER	IN 1 HOUR		4.20E-01	OTH-R1
			FIXED	COMPONENTS	FAILURE		3.17E-04	ED1MOD11
			CCF OF ADS 4TH STAGE SQUIB VALVES		TO OPEN		3.00E-05	ADX-EV-SA
186	1.77E-11	.02	LOSS OF OFFSITE	POWER INITIATING	EVENT OCCURS	WITH RCS DRAINED	4.44E-03	IEV-LOSPD
			FAILURE TO	RECOVER AC POWER	IN 1 HOUR		4.20E-01	OTH-R1
			FIXED	COMPONENTS	FAILURE		3.17E-04	ED1MOD113
			CCF OF ADS 4TH STAGE SQUIB VALVES		TO OPEN		3.00E-05	ADX-EV-SA
187	1.73E-11	.02	LOSS OF OFFSITE	POWER INITIATING	EVENT OCCURS	WITH RCS DRAINED	4.44E-03	IEV-LOSPD
			FAILURE TO	RECOVER AC POWER	IN 1 HOUR		4.20E-01	OTH-R1
			PUMP 01A FAILS;	STOP CK V007A,	CB & RELAY FTC;	CB ECS122 SPO	1.53E-02	RNAMOD06S
			D/G FAILS TO	START & RUN OR	BKR 202 FAILS TO	CLOSE	2.02E-02	ZO2MOD01
			CCF OF ADS 4TH STAGE SQUIB VALVES		TO OPEN		3.00E-05	ADX-EV-SA
188	1.73E-11	.02	LOSS OF OFFSITE	POWER INITIATING	EVENT OCCURS	WITH RCS DRAINED	4.44E-03	IEV-LOSPD
			FAILURE TO	RECOVER AC POWER	IN 1 HOUR		4.20E-01	OTH-R1
			PUMP 01B FAILS &	ST CK V007B & C	B FTC & RE FTC &	CB ECS221 SPO	1.53E-02	RNBMOD07S
			D/G FAILS TO	START & RUN OR	BKR 102 FAILS TO	CLOSE	2.02E-02	ZO1MOD01
			CCF OF ADS 4TH STAGE SQUIB VALVES		TO OPEN		3.00E-05	ADX-EV-SA
189	1.72E-11	.02	LOSS OF OFFSITE	POWER INITIATING	EVENT OCCURS	WITH RCS DRAINED	4.44E-03	IEV-LOSPD
			FAILURE TO	RECOVER AC POWER	IN 1 HOUR		4.20E-01	OTH-R1
			CCF OF RNS PUMPS	P01A/B TO START			7.70E-04	RNX-PM-FS
			CCF OF STRAINERS	IN IRWST TANK			1.20E-05	IWX-FL-GP

Table 54-5 (Sheet 24 of 25)

AP600 SHUTDOWN LEVEL 1 PRA TOP 200 CUTSETS

NUMBER	CUTSET PROB	PERCENT	BASIC EVENT NAME				EVENT PROB.	IDENTIFIER
190	1.72E-11	.02	LOSS OF OFFSITE	POWER INITIATING	EVENT OCCURS	WITH RCS DRAINED	4.44E-03	IEV-LOSPD
			FAILURE TO	RECOVER AC POWER	IN 1 HOUR		4.20E-01	OTH-R1
			CCF OF RNS PUMPS	P01A/B TO START			7.70E-04	RNX-PM-FS
			CCF OF IRWST RECIRC	SUMP STRAINERS	PLUGGING		1.20E-05	REX-FL-GP
191	1.72E-11	.02	LOSS OF OFFSITE	POWER INITIATING	EVENT OCCURS	WITH RCS DRAINED	4.44E-03	IEV-LOSPD
			FAILURE TO	RECOVER AC POWER	IN 1 HOUR		4.20E-01	OTH-R1
			CCF TO START	OF ENGINE-DRIVEN	FUEL PUMPS		2.00E-03	ZOX-PD-ES
			FAILURE OF	PMS OUTPUT	LOGIC I/Os		2.09E-03	PMAMOD11
			MECHANICAL	FAILURE CAUSES	MOV 023 TO	FAIL-TO-OPEN	2.21E-03	RN23MOD5S
192	1.71E-11	.02	LOSS OF OFFSITE	POWER INITIATING	EVENT OCCURS	WITH RCS DRAINED	4.44E-03	IEV-LOSPD
			FAILURE TO	RECOVER AC POWER	IN 1 HOUR		4.20E-01	OTH-R1
			EDS1 EA 1 DISTR.	PNL FAILURE OR	T&M		3.05E-04	ED1MOD07
			CCF OF ADS 4TH STAGE	SQUIB VALVES	TO OPEN		3.00E-05	ADX-EV-SA
193	1.68E-11	.02	LOSS OF OFFSITE	POWER INITIATING	EVENT OCCURS	WITH RCS DRAINED	4.44E-03	IEV-LOSPD
			FAILURE TO	RECOVER AC POWER	IN 1 HOUR		4.20E-01	OTH-R1
			BATTERY	DB1	UNAVAILABLE		2.70E-03	ED1MOD03
			FAILURE OF	PMS OUTPUT	LOGIC I/Os		2.09E-03	PMAMOD11
			OPERATOR FAILS	TO RECOGNIZE	NEED AND TO OPEN	RNS MOV V023	1.60E-03	RHN-MAN05
194	1.68E-11	.02	LOSS OF OFFSITE	POWER INITIATING	EVENT OCCURS	WITH RCS DRAINED	4.44E-03	IEV-LOSPD
			FAILURE TO	RECOVER AC POWER	IN 1 HOUR		4.20E-01	OTH-R1
			PUMP MP 01B	SEGMENT HARDWARE	FAILURE OR	DIVERTED FLOW	2.44E-02	SWBMOD02
			BREAKER 100	FAILS TO OPEN		[#3,5]	1.23E-02	EC1CB100VO
			CCF OF ADS 4TH STAGE	SQUIB VALVES	TO OPEN		3.00E-05	ADX-EV-SA
195	1.65E-11	.02	LOSS OF OFFSITE	POWER INITIATING	EVENT OCCURS	WITH RCS DRAINED	4.44E-03	IEV-LOSPD
			FAILURE TO	RECOVER AC POWER	IN 1 HOUR		4.20E-01	OTH-R1
			PUMP 01A FAILS;	STOP CK V007A,	CB & RELAY FTC;	CB ECS122 SPO	1.53E-02	RNAMOD06S
			BREAKER 200	FAILS TO OPEN		[#5,3]	1.23E-02	EC2CB200VO
			COMMON CAUSE	FAILURE OF THE	BATTERIES	IDSA-DB-1A/1B	4.70E-05	CCX-BY-PN
196	1.65E-11	.02	LOSS OF OFFSITE	POWER INITIATING	EVENT OCCURS	WITH RCS DRAINED	4.44E-03	IEV-LOSPD
			FAILURE TO	RECOVER AC POWER	IN 1 HOUR		4.20E-01	OTH-R1
			PUMP 01B FAILS &	ST CK V007B & C	B FTC & RE FTC &	CB ECS221 SPO	1.53E-02	RNBMOD07S
			BREAKER 100	FAILS TO OPEN		[#3,5]	1.23E-02	EC1CB100VO
			COMMON CAUSE	FAILURE OF THE	BATTERIES	IDSA-DB-1A/1B	4.70E-05	CCX-BY-PN

Table 54-5 (Sheet 25 of 25)

AP600 SHUTDOWN LEVEL 1 PRA TOP 200 CUTSETS

NUMBER	CUTSET PROB	PERCENT	BASIC EVENT NAME				EVENT PROB.	IDENTIFIER
197	1.63E-11	.02	LOSS OF OFFSITE	POWER INITIATING	EVENT OCCURS	WITH RCS DRAINED	4.44E-03	IEV-LOSPD
			FAILURE TO	RECOVER AC POWER	IN 1 HOUR		4.20E-01	OTH-R1
			COMMON CAUSE	FAILURE	4KV BREAKER TO	CLOSE	7.30E-04	ECX-CB-GC
			CCF OF IRWST RECI	RC SUMP STRAINERS	PLUGGING		1.20E-05	REX-FL-GP
198	1.63E-11	.02	LOSS OF OFFSITE	POWER INITIATING	EVENT OCCURS	WITH RCS DRAINED	4.44E-03	IEV-LOSPD
			FAILURE TO	RECOVER AC POWER	IN 1 HOUR		4.20E-01	OTH-R1
			COMMON CAUSE	FAILURE	4KV BREAKER TO	CLOSE	7.30E-04	ECX-CB-GC
			CCF OF STRAINERS	IN IRWST TANK			1.20E-05	IWX-FL-GP
199	1.57E-11	.02	LOSS OF OFFSITE	POWER INITIATING	EVENT OCCURS	WITH RCS DRAINED	4.44E-03	IEV-LOSPD
			OFFSITE	AC POWER	RECOVERED IN	1 HOUR	5.80E-01	SUC-R1S
			PUMP 01A FAILS;	STOP CK V007A,	CB & RELAY FTC;	CB ECS122 SPO	1.53E-02	RNAMOD06S
			PUMP 01B FAILS &	ST CK V007B & C	B FTC & RE FTC &	CB ECS221 SPO	1.53E-02	RNBMOD07S
			CCF OF 6/6 IRWST	HP SQUIB VALVES	TO OPEN		2.60E-05	IWX-EV-SA
200	1.57E-11	.02	LOSS OF OFFSITE	POWER INITIATING	EVENT OCCURS	WITH RCS DRAINED	4.44E-03	IEV-LOSPD
			OFFSITE	AC POWER	RECOVERED IN	1 HOUR	5.80E-01	SUC-R1S
			PUMP 01A FAILS;	STOP CK V007A,	CB & RELAY FTC;	CB ECS122 SPO	1.53E-02	RNAMOD06S
			PUMP 01B FAILS &	ST CK V007B & C	B FTC & RE FTC &	CB ECS221 SPO	1.53E-02	RNBMOD07S
			CCF OF 2/2 IRWST	LP SQUIB VALVES	TO OPEN		2.60E-05	IWX-EV4-SA

Table 54-6 (Sheet 1 of 25)

AP1000 SHUTDOWN LEVEL 1 PRA TOP 200 CUTSETS

***** DOMINANT CUTSETS ***** Page: 1

Title: AP1000 SD PRA
File: 1000sn1.w1 (Case 1)
Reduced Sum of Cutsets: 1.2310E-07

NUMBER	CUTSET PROB	PERCENT	BASIC EVENT NAME	EVENT PROB.	IDENTIFIER
1	2.15E-08	17.47	LOSS OF CCS/SWS WITH RCS DRAINED INITIATING EVENT OCCURS	7.16E-04	IEV-CCWD
			CCF OF ADS 4TH STAGE SQUIB VALVES TO OPEN	3.00E-05	ADX-EV-SA
2	1.86E-08	15.11	LOSS OF CCS/SWS WITH RCS DRAINED INITIATING EVENT OCCURS	7.16E-04	IEV-CCWD
			CCF OF 6/6 IRWST HP SQUIB VALVES TO OPEN	2.60E-05	IWX-EV-SA
3	1.86E-08	15.11	LOSS OF CCS/SWS WITH RCS DRAINED INITIATING EVENT OCCURS	7.16E-04	IEV-CCWD
			CCF OF 2/2 IRWST LP SQUIB VALVES TO OPEN	2.60E-05	IWX-EV4-SA
4	8.59E-09	6.98	LOSS OF CCS/SWS WITH RCS DRAINED INITIATING EVENT OCCURS	7.16E-04	IEV-CCWD
			CCF OF IRWST RECIRC SUMP STRAINERS PLUGGING	1.20E-05	REX-FL-GP
5	8.59E-09	6.98	LOSS OF CCS/SWS WITH RCS DRAINED INITIATING EVENT OCCURS	7.16E-04	IEV-CCWD
			CCF OF STRAINERS IN IRWST TANK	1.20E-05	IWX-FL-GP
6	3.67E-09	2.98	LOSS OF OFFSITE POWER INITIATING EVENT OCCURS WITH RCS DRAINED	5.28E-03	IEV-LOSPD
			OFFSITE AC POWER RECOVERED IN 1 HOUR	5.80E-01	SUC-R1S
			SOFTWARE CCF OF ALL CARDS	1.20E-06	CCX-SFTW
7	2.91E-09	2.36	LOSS OF RNS WITH RCS DRAINED INITIATING EVENT OCCURS	9.69E-05	IEV-RNSD
			CCF OF ADS 4TH STAGE SQUIB VALVES TO OPEN	3.00E-05	ADX-EV-SA
8	2.66E-09	2.16	LOSS OF OFFSITE POWER INITIATING EVENT OCCURS WITH RCS DRAINED	5.28E-03	IEV-LOSPD
			FAILURE TO RECOVER AC POWER IN 1 HOUR	4.20E-01	OTH-R1
			SOFTWARE CCF OF ALL CARDS	1.20E-06	CCX-SFTW
9	2.60E-09	2.11	LOSS OF CCS/SWS WITH RCS DRAINED INITIATING EVENT OCCURS	7.16E-04	IEV-CCWD
			CCF OF ORIFICES	3.63E-06	CCX-ORY-SPX
10	2.52E-09	2.05	LOSS OF RNS WITH RCS DRAINED INITIATING EVENT OCCURS	9.69E-05	IEV-RNSD
			CCF OF 2/2 IRWST LP SQUIB VALVES TO OPEN	2.60E-05	IWX-EV4-SA

Table 54-6 (Sheet 2 of 25)

AP1000 SHUTDOWN LEVEL 1 PRA TOP 200 CUTSETS

NUMBER	CUTSET PROB	PERCENT	BASIC EVENT NAME	EVENT PROB.	IDENTIFIER
11	2.52E-09	2.05	LOSS OF RNS WITH RCS DRAINED INITIATING EVENT OCCURS	9.69E-05	IEV-RNSD
			CCF OF 6/6 IRWST HP SQUIB VALVES TO OPEN	2.60E-05	IWX-EV-SA
12	2.18E-09	1.77	OVERDRAINING OF RCS DURING DRAIN DOWN TO MID-LOOP INITIATING EVENT	5.28E-06	IEV-RCSOD
			OPERATOR FAILS TO ISOLATE RNS PIPE RUPTURE	5.50E-02	RHN-MAN04
			COND. PROB. OF IWN-MAN00 (OP. FAILS TO ACTUATE IRWST INJ)	5.00E-02	IWN-MAN00C
			COND. PROB. OF RHN-MAN05 (OP. FAILS TO OPEN RNS MOV V023)	1.50E-01	RHN-MAN05C
13	1.88E-09	1.53	LOSS OF CCS/SWS WITH RCS DRAINED INITIATING EVENT OCCURS	7.16E-04	IEV-CCWD
			CCF OF PRESSURE TRANSMITTERS	2.63E-06	CCX-XMTRX
14	1.44E-09	1.17	LOSS OF CCS/SWS WITH RCS DRAINED INITIATING EVENT OCCURS	7.16E-04	IEV-CCWD
			CCF OF IRWST TANK LEVEL TRANSMITTER	2.01E-04	IWX-XMTR
			OPERATOR FAILS TO ACTUATE SUMP RECIRC WHEN IRWST SIGNAL FAILS	1.00E-02	REN-MAN04
15	1.16E-09	.94	LOSS OF RNS WITH RCS DRAINED INITIATING EVENT OCCURS	9.69E-05	IEV-RNSD
			CCF OF STRAINERS IN IRWST TANK	1.20E-05	IWX-FL-GP
16	1.16E-09	.94	LOSS OF RNS WITH RCS DRAINED INITIATING EVENT OCCURS	9.69E-05	IEV-RNSD
			CCF OF IRWST RECIRC SUMP STRAINERS PLUGGING	1.20E-05	REX-FL-GP
17	8.61E-10	.70	OVERDRAINING OF RCS DURING DRAIN DOWN TO MID-LOOP INITIATING EVENT	5.28E-06	IEV-RCSOD
			OPERATOR SUCCEEDS IN ISOLATING RNS LEAK	9.45E-01	RHN-MAN04-SUCC
			OPERATOR FAILS TO ACTUATE IRWST INJECTION	1.15E-03	IWN-MAN00
			COND. PROB. OF RHN-MAN05 (OP. FAILS TO OPEN RNS MOV V023)	1.50E-01	RHN-MAN05C
18	8.59E-10	.70	LOSS OF CCS/SWS WITH RCS DRAINED INITIATING EVENT OCCURS	7.16E-04	IEV-CCWD
			SOFTWARE CCF OF ALL CARDS	1.20E-06	CCX-SFTW
19	5.19E-10	.42	LOCA/RNS-V024 OPENS INITIATING EVENT OCCURS WITH RCS FILLED	1.73E-05	IEV-LOCA24ND
			CCF OF GRAVITY INJECTION CHECK VALVES TO OPEN	3.00E-05	IWX-CV-AO
20	5.19E-10	.42	LOCA/RNS-V024 OPENS INITIATING EVENT OCCURS WITH RCS FILLED	1.73E-05	IEV-LOCA24ND
			CCF OF ADS 4TH STAGE SQUIB VALVES TO OPEN	3.00E-05	ADX-EV-SA
21	5.16E-10	.42	LOSS OF CCS/SWS WITH RCS DRAINED INITIATING EVENT OCCURS	7.16E-04	IEV-CCWD
			MECHANICAL FAILURE CAUSES MOV 121A TO FAIL-TO-OPEN	3.00E-03	IRWMOD05S
			IRWST DISCHARGE LINE "B" STRAINER PLUGGED	2.40E-04	IWB-PLUG
22	4.50E-10	.37	LOCA/RNS-V024 OPENS INITIATING EVENT OCCURS WITH RCS FILLED	1.73E-05	IEV-LOCA24ND
			CCF OF 2/2 IRWST LP SQUIB VALVES TO OPEN	2.60E-05	IWX-EV4-SA

Table 54-6 (Sheet 3 of 25)

AP1000 SHUTDOWN LEVEL 1 PRA TOP 200 CUTSETS

NUMBER	CUTSET PROB	PERCENT	BASIC EVENT NAME				EVENT PROB.	IDENTIFIER
23	3.99E-10	.32	LOSS OF CCS/SWS	WITH RCS FILLED	INITIATING EVENT OCCURS		3.99E-03	IEV-CCWND
			FAILURE OF	MANUAL DAS	ACTUATION		1.16E-02	REC-MANDAS
			CCF OF THE POWER	INTERFACE OUTPUT	BOARDS IN PMS		8.62E-06	CCX-EP-SAM
24	3.82E-10	.31	LOSS OF CCS/SWS	WITH RCS FILLED	INITIATING EVENT OCCURS		3.99E-03	IEV-CCWND
			COND. PROB. OF	REC-MANDAS	(FAILURE OF MANUAL DAS ACTUATION)		5.06E-01	REC-MANDASC
			CCF OF ORIFICES				2.77E-04	CCX-ORY-SP
			OPERATOR FAILS	TO RECOGNIZE THE	NEED FOR RCS	DEPRESSURIZATION	6.83E-04	LPM-MAN05
25	3.52E-10	.29	LOSS OF RNS WITH	RCS DRAINED	INITIATING EVENT OCCURS		9.69E-05	IEV-RNSD
			CCF OF ORIFICES				3.63E-06	CCX-ORY-SPX
26	3.45E-10	.28	LOCA/RNS-V024	OPENS INITIATING	EVENT OCCURS	WITH RCS DRAINED	1.15E-05	IEV-LOCA24D
			CCF OF ADS 4TH STAGE	SQUIB VALVES	TO OPEN		3.00E-05	ADX-EV-SA
27	3.44E-10	.28	LOSS OF CCS/SWS	WITH RCS FILLED	INITIATING EVENT OCCURS		3.99E-03	IEV-CCWND
			FAILURE OF	MANUAL DAS	REACTOR TRIP	HARDWARE	1.00E-02	MDAS
			CCF OF THE POWER	INTERFACE OUTPUT	BOARDS IN PMS		8.62E-06	CCX-EP-SAM
28	2.99E-10	.24	LOCA/RNS-V024	OPENS INITIATING	EVENT OCCURS	WITH RCS DRAINED	1.15E-05	IEV-LOCA24D
			CCF OF 2/2 IRWST	LP SQUIB VALVES	TO OPEN		2.60E-05	IWX-EV4-SA
29	2.99E-10	.24	LOCA/RNS-V024	OPENS INITIATING	EVENT OCCURS	WITH RCS DRAINED	1.15E-05	IEV-LOCA24D
			CCF OF 6/6 IRWST	HP SQUIB VALVES	TO OPEN		2.60E-05	IWX-EV-SA
30	2.81E-10	.23	LOSS OF OFFSITE	POWER INITIATING	EVENT OCCURS	WITH RCS DRAINED	5.28E-03	IEV-LOSPD
			FAILURE TO	RECOVER AC POWER	IN 1 HOUR		4.20E-01	OTH-R1
			BATTERY	DB1	UNAVAILABLE		2.70E-03	ED1MOD03
			COMMON CAUSE	FAILURE OF THE	BATTERIES	IDSA-DB-1A/1B	4.70E-05	CCX-BY-PN
31	2.77E-10	.23	LOSS OF CCS/SWS	WITH RCS FILLED	INITIATING EVENT OCCURS		3.99E-03	IEV-CCWND
			COND. PROB. OF	REC-MANDAS	(FAILURE OF MANUAL DAS ACTUATION)		5.06E-01	REC-MANDASC
			CCF OF PRESSURE	TRANSMITTERS			2.01E-04	CCX-XMTR195
			OPERATOR FAILS	TO RECOGNIZE THE	NEED FOR RCS	DEPRESSURIZATION	6.83E-04	LPM-MAN05
32	2.55E-10	.21	LOSS OF RNS WITH	RCS DRAINED	INITIATING EVENT OCCURS		9.69E-05	IEV-RNSD
			CCF OF PRESSURE	TRANSMITTERS			2.63E-06	CCX-XMTRX

Table 54-6 (Sheet 4 of 25)

AP1000 SHUTDOWN LEVEL 1 PRA TOP 200 CUTSETS

NUMBER	CUTSET PROB	PERCENT	BASIC EVENT NAME				EVENT PROB.	IDENTIFIER
33	2.18E-10	.18	LOSS OF OFFSITE	POWER INITIATING	EVENT OCCURS	WITH RCS DRAINED	5.28E-03	IEV-LOSPD
			FAILURE TO	RECOVER AC POWER	IN 1 HOUR		4.20E-01	OTH-R1
			FAILURE OF	PLS OUTPUT	LOGIC I/Os		2.09E-03	PL5MOD11
			COMMON CAUSE	FAILURE OF THE	BATTERIES	IDSA-DB-1A/1B	4.70E-05	CCX-BY-PN
34	2.08E-10	.17	LOSS OF OFFSITE	POWER INITIATING	EVENT OCCURS	WITH RCS DRAINED	5.28E-03	IEV-LOSPD
			FAILURE TO	RECOVER AC POWER	IN 1 HOUR		4.20E-01	OTH-R1
			CCF TO START	OF ENGINE-DRIVEN	FUEL PUMPS		2.00E-03	ZOX-PD-ES
			COMMON CAUSE	FAILURE OF THE	BATTERIES	IDSA-DB-1A/1B	4.70E-05	CCX-BY-PN
35	2.08E-10	.17	LOCA/RNS-V024	OPENS INITIATING	EVENT OCCURS	WITH RCS FILLED	1.73E-05	IEV-LOCA24ND
			CCF OF STRAINERS	IN IRWST TANK			1.20E-05	IWX-FL-GP
36	2.08E-10	.17	LOCA/RNS-V024	OPENS INITIATING	EVENT OCCURS	WITH RCS FILLED	1.73E-05	IEV-LOCA24ND
			CCF OF IRWST RECIRC SUMP STRAINERS	PLUGGING			1.20E-05	REX-FL-GP
37	1.95E-10	.16	LOSS OF RNS WITH RCS DRAINED		INITIATING EVENT OCCURS		9.69E-05	IEV-RNSD
			CCF OF IRWST TANK LEVEL TRANSMITTER				2.01E-04	IWX-XMTR
			OPERATOR FAILS TO ACTUATE SUMP RECIRC WHEN IRWST SIGNAL FAILS				1.00E-02	REN-MAN04
38	1.93E-10	.16	LOSS OF OFFSITE	POWER INITIATING	EVENT OCCURS	WITH RCS FILLED	1.82E-02	IEV-LOSPND
			OFFSITE	AC POWER	RECOVERED IN	2 HOURS	7.60E-01	SUC-R2S
			SOFTWARE CCF	OF ALL CARDS			1.20E-06	CCX-SFTW
			FAILURE OF	MANUAL DAS	ACTUATION		1.16E-02	REC-MANDAS
39	1.80E-10	.15	LOSS OF OFFSITE	POWER INITIATING	EVENT OCCURS	WITH RCS DRAINED	5.28E-03	IEV-LOSPD
			FAILURE TO	RECOVER AC POWER	IN 1 HOUR		4.20E-01	OTH-R1
			BATTERY	DB1	UNAVAILABLE		2.70E-03	ED1MOD03
			CCF OF ADS 4TH STAGE SQUIB VALVES		TO OPEN		3.00E-05	ADX-EV-SA
40	1.66E-10	.13	LOSS OF OFFSITE	POWER INITIATING	EVENT OCCURS	WITH RCS FILLED	1.82E-02	IEV-LOSPND
			OFFSITE	AC POWER	RECOVERED IN	2 HOURS	7.60E-01	SUC-R2S
			SOFTWARE CCF	OF ALL CARDS			1.20E-06	CCX-SFTW
			FAILURE OF	MANUAL DAS	REACTOR TRIP	HARDWARE	1.00E-02	MDAS
41	1.56E-10	.13	LOSS OF OFFSITE	POWER INITIATING	EVENT OCCURS	WITH RCS DRAINED	5.28E-03	IEV-LOSPD
			FAILURE TO	RECOVER AC POWER	IN 1 HOUR		4.20E-01	OTH-R1
			BATTERY	DB1	UNAVAILABLE		2.70E-03	ED1MOD03
			CCF OF 2/2 IRWST LP SQUIB VALVES		TO OPEN		2.60E-05	IWX-EV4-SA

Table 54-6 (Sheet 5 of 25)

AP1000 SHUTDOWN LEVEL 1 PRA TOP 200 CUTSETS

NUMBER	CUTSET PROB	PERCENT	BASIC EVENT NAME	EVENT PROB.	IDENTIFIER
42	1.56E-10	.13	LOSS OF OFFSITE POWER INITIATING EVENT OCCURS WITH RCS DRAINED	5.28E-03	IEV-LOSPD
			FAILURE TO RECOVER AC POWER IN 1 HOUR	4.20E-01	OTH-R1
			BATTERY DB1 UNAVAILABLE	2.70E-03	ED1MOD03
			CCF OF 6/6 IRWST HP SQUIB VALVES TO OPEN	2.60E-05	IWX-EV-SA
43	1.50E-10	.12	OVERDRAINING OF RCS DURING DRAIN DOWN TO MID-LOOP INITIATING EVENT	5.28E-06	IEV-RCSOD
			OPERATOR SUCCEEDS IN ISOLATING RNS LEAK	9.45E-01	RHN-MAN04-SUCC
			CCF OF ADS 4TH STAGE SQUIB VALVES TO OPEN	3.00E-05	ADX-EV-SA
44	1.44E-10	.12	LOSS OF OFFSITE POWER INITIATING EVENT OCCURS WITH RCS DRAINED	5.28E-03	IEV-LOSPD
			FAILURE TO RECOVER AC POWER IN 1 HOUR	4.20E-01	OTH-R1
			BATTERY DB1 UNAVAILABLE	2.70E-03	ED1MOD03
			COMMON CAUSE FAILURE OF THE INVERTER	2.40E-05	CCX-IV-XR
45	1.42E-10	.12	LOSS OF CCS/SWS WITH RCS FILLED INITIATING EVENT OCCURS	3.99E-03	IEV-CCWND
			COND. PROB. OF REC-MANDAS (FAILURE OF MANUAL DAS ACTUATION)	5.06E-01	REC-MANDASC
			COMMON MODE FAILURE OF INPUT LOGIC GROUPS	1.03E-04	CCX-INPUT-LOGIC
			OPERATOR FAILS TO RECOGNIZE THE NEED FOR RCS DEPRESSURIZATION	6.83E-04	LPM-MAN05
46	1.39E-10	.11	LOSS OF OFFSITE POWER INITIATING EVENT OCCURS WITH RCS DRAINED	5.28E-03	IEV-LOSPD
			FAILURE TO RECOVER AC POWER IN 1 HOUR	4.20E-01	OTH-R1
			FAILURE OF PLS OUTPUT LOGIC I/Os	2.09E-03	PL5MOD11
			CCF OF ADS 4TH STAGE SQUIB VALVES TO OPEN	3.00E-05	ADX-EV-SA
47	1.38E-10	.11	LOCA/RNS-V024 OPENS INITIATING EVENT OCCURS WITH RCS DRAINED	1.15E-05	IEV-LOCA24D
			CCF OF IRWST RECIRC SUMP STRAINERS PLUGGING	1.20E-05	REX-FL-GP
48	1.38E-10	.11	LOCA/RNS-V024 OPENS INITIATING EVENT OCCURS WITH RCS DRAINED	1.15E-05	IEV-LOCA24D
			CCF OF STRAINERS IN IRWST TANK	1.20E-05	IWX-FL-GP
49	1.33E-10	.11	LOSS OF OFFSITE POWER INITIATING EVENT OCCURS WITH RCS DRAINED	5.28E-03	IEV-LOSPD
			FAILURE TO RECOVER AC POWER IN 1 HOUR	4.20E-01	OTH-R1
			CCF TO START OF ENGINE-DRIVEN FUEL PUMPS	2.00E-03	ZOX-PD-ES
			CCF OF ADS 4TH STAGE SQUIB VALVES TO OPEN	3.00E-05	ADX-EV-SA
50	1.30E-10	.11	OVERDRAINING OF RCS DURING DRAIN DOWN TO MID-LOOP INITIATING EVENT	5.28E-06	IEV-RCSOD
			OPERATOR SUCCEEDS IN ISOLATING RNS LEAK	9.45E-01	RHN-MAN04-SUCC
			CCF OF 2/2 IRWST LP SQUIB VALVES TO OPEN	2.60E-05	IWX-EV4-SA

Table 54-6 (Sheet 6 of 25)

AP1000 SHUTDOWN LEVEL 1 PRA TOP 200 CUTSETS

NUMBER	CUTSET PROB	PERCENT	BASIC EVENT NAME				EVENT PROB.	IDENTIFIER
51	1.30E-10	.11	OVERDRAINING OF	RCS DURING DRAIN DOWN TO MID-LOOP		INITIATING EVENT	5.28E-06	IEV-RCSOD
			OPERATOR SUCCEEDS IN ISOLATING RNS LEAK				9.45E-01	RHN-MAN04-SUCC
			CCF OF 6/6 IRWST HP SQUIB VALVES TO OPEN				2.60E-05	IWX-EV-SA
52	1.25E-10	.10	LOSS OF OFFSITE	POWER INITIATING	EVENT OCCURS	WITH RCS DRAINED	5.28E-03	IEV-LOSPD
			FAILURE TO	RECOVER AC POWER	IN 1 HOUR		4.20E-01	OTH-R1
			COMMON CAUSE	FAILURE	4KV BREAKERS TO	OPEN	1.20E-03	ECX-CB-GO
			COMMON CAUSE	FAILURE OF THE	BATTERIES	IDSA-DB-1A/1B	4.70E-05	CCX-BY-PN
53	1.21E-10	.10	LOSS OF OFFSITE	POWER INITIATING	EVENT OCCURS	WITH RCS DRAINED	5.28E-03	IEV-LOSPD
			FAILURE TO	RECOVER AC POWER	IN 1 HOUR		4.20E-01	OTH-R1
			PLS LOGIC GROUP	PROCESSING	FAILURE UPON	DEMAND	1.16E-03	PL50301BSA
			COMMON CAUSE	FAILURE OF THE	BATTERIES	IDSA-DB-1A/1B	4.70E-05	CCX-BY-PN
54	1.21E-10	.10	LOSS OF OFFSITE	POWER INITIATING	EVENT OCCURS	WITH RCS DRAINED	5.28E-03	IEV-LOSPD
			FAILURE TO	RECOVER AC POWER	IN 1 HOUR		4.20E-01	OTH-R1
			PLS LOGIC GROUP	PROCESSING	FAILURE UPON	DEMAND	1.16E-03	PL50301ASA
			COMMON CAUSE	FAILURE OF THE	BATTERIES	IDSA-DB-1A/1B	4.70E-05	CCX-BY-PN
55	1.21E-10	.10	LOSS OF OFFSITE	POWER INITIATING	EVENT OCCURS	WITH RCS DRAINED	5.28E-03	IEV-LOSPD
			FAILURE TO	RECOVER AC POWER	IN 1 HOUR		4.20E-01	OTH-R1
			FAILURE OF	PLS OUTPUT	LOGIC I/Os		2.09E-03	PL5MOD11
			CCF OF 6/6 IRWST	HP SQUIB VALVES TO OPEN			2.60E-05	IWX-EV-SA
56	1.21E-10	.10	LOSS OF OFFSITE	POWER INITIATING	EVENT OCCURS	WITH RCS DRAINED	5.28E-03	IEV-LOSPD
			FAILURE TO	RECOVER AC POWER	IN 1 HOUR		4.20E-01	OTH-R1
			FAILURE OF	PLS OUTPUT	LOGIC I/Os		2.09E-03	PL5MOD11
			CCF OF 2/2 IRWST	LP SQUIB VALVES TO OPEN			2.60E-05	IWX-EV4-SA
57	1.16E-10	.09	LOSS OF RNS WITH	RCS DRAINED	INITIATING EVENT	OCCURS	9.69E-05	IEV-RNSD
			SOFTWARE CCF	OF ALL CARDS			1.20E-06	CCX-SFTW
58	1.15E-10	.09	LOSS OF OFFSITE	POWER INITIATING	EVENT OCCURS	WITH RCS DRAINED	5.28E-03	IEV-LOSPD
			FAILURE TO	RECOVER AC POWER	IN 1 HOUR		4.20E-01	OTH-R1
			CCF TO START	OF ENGINE-DRIVEN	FUEL PUMPS		2.00E-03	ZOX-PD-ES
			CCF OF 6/6 IRWST	HP SQUIB VALVES TO OPEN			2.60E-05	IWX-EV-SA

Table 54-6 (Sheet 7 of 25)

AP1000 SHUTDOWN LEVEL 1 PRA TOP 200 CUTSETS

NUMBER	CUTSET PROB	PERCENT	BASIC EVENT NAME				EVENT PROB.	IDENTIFIER
59	1.15E-10	.09	LOSS OF OFFSITE	POWER INITIATING	EVENT OCCURS	WITH RCS DRAINED	5.28E-03	IEV-LOSPD
			FAILURE TO	RECOVER AC POWER	IN 1 HOUR		4.20E-01	OTH-R1
			CCF TO START	OF ENGINE-DRIVEN	FUEL PUMPS		2.00E-03	ZOX-PD-ES
			CCF OF 2/2 IRWST	LP SQUIB VALVES	TO OPEN		2.60E-05	IWX-EV4-SA
60	1.11E-10	.09	LOSS OF OFFSITE	POWER INITIATING	EVENT OCCURS	WITH RCS DRAINED	5.28E-03	IEV-LOSPD
			FAILURE TO	RECOVER AC POWER	IN 1 HOUR		4.20E-01	OTH-R1
			FAILURE OF	PLS OUTPUT	LOGIC I/Os		2.09E-03	PL5MOD11
			COMMON CAUSE	FAILURE OF THE	INVERTER		2.40E-05	CCX-IV-XR
61	1.06E-10	.09	LOSS OF OFFSITE	POWER INITIATING	EVENT OCCURS	WITH RCS DRAINED	5.28E-03	IEV-LOSPD
			FAILURE TO	RECOVER AC POWER	IN 1 HOUR		4.20E-01	OTH-R1
			CCF TO START	OF ENGINE-DRIVEN	FUEL PUMPS		2.00E-03	ZOX-PD-ES
			COMMON CAUSE	FAILURE OF THE	INVERTER		2.40E-05	CCX-IV-XR
62	1.02E-10	.08	LOSS OF RNS WITH	RCS FILLED	INITIATING EVENT	OCCURS	1.02E-03	IEV-RNSND
			FAILURE OF	MANUAL DAS	ACTUATION		1.16E-02	REC-MANDAS
			CCF OF THE POWER	INTERFACE OUTPUT	BOARDS IN PMS		8.62E-06	CCX-EP-SAM
63	9.76E-11	.08	LOSS OF RNS WITH	RCS FILLED	INITIATING EVENT	OCCURS	1.02E-03	IEV-RNSND
			COND. PROB. OF	REC-MANDAS	(FAILURE OF MANUAL	DAS ACTUATION)	5.06E-01	REC-MANDASC
			CCF OF ORIFICES				2.77E-04	CCX-ORY-SP
			OPERATOR FAILS	TO RECOGNIZE THE	NEED FOR RCS	DEPRESSURIZATION	6.83E-04	LPM-MAN05
64	8.79E-11	.07	LOSS OF RNS WITH	RCS FILLED	INITIATING EVENT	OCCURS	1.02E-03	IEV-RNSND
			FAILURE OF	MANUAL DAS	REACTOR TRIP	HARDWARE	1.00E-02	MDAS
			CCF OF THE POWER	INTERFACE OUTPUT	BOARDS IN PMS		8.62E-06	CCX-EP-SAM
65	8.03E-11	.07	LOSS OF OFFSITE	POWER INITIATING	EVENT OCCURS	WITH RCS DRAINED	5.28E-03	IEV-LOSPD
			FAILURE TO	RECOVER AC POWER	IN 1 HOUR		4.20E-01	OTH-R1
			CCF TO START	OF THE PUMPS			7.70E-04	RNX-PM-FS
			COMMON CAUSE	FAILURE OF THE	BATTERIES	IDSA-DB-1A/1B	4.70E-05	CCX-BY-PN
66	7.98E-11	.06	LOSS OF OFFSITE	POWER INITIATING	EVENT OCCURS	WITH RCS DRAINED	5.28E-03	IEV-LOSPD
			FAILURE TO	RECOVER AC POWER	IN 1 HOUR		4.20E-01	OTH-R1
			COMMON CAUSE	FAILURE	4KV BREAKERS TO	OPEN	1.20E-03	ECX-CB-GO
			CCF OF ADS 4TH	STAGE SQUIB VALVES	TO OPEN		3.00E-05	ADX-EV-SA

Table 54-6 (Sheet 8 of 25)

AP1000 SHUTDOWN LEVEL 1 PRA TOP 200 CUTSETS

NUMBER	CUTSET PROB	PERCENT	BASIC EVENT NAME				EVENT PROB.	IDENTIFIER
67	7.72E-11	.06	LOSS OF OFFSITE	POWER INITIATING	EVENT OCCURS	WITH RCS DRAINED	5.28E-03	IEV-LOSPD
			FAILURE TO	RECOVER AC POWER	IN 1 HOUR		4.20E-01	OTH-R1
			PLS LOGIC GROUP	PROCESSING	FAILURE UPON	DEMAND	1.16E-03	PL50301BSA
			CCF OF ADS 4TH STAGE SQUIB VALVES		TO OPEN		3.00E-05	ADX-EV-SA
68	7.72E-11	.06	LOSS OF OFFSITE	POWER INITIATING	EVENT OCCURS	WITH RCS DRAINED	5.28E-03	IEV-LOSPD
			FAILURE TO	RECOVER AC POWER	IN 1 HOUR		4.20E-01	OTH-R1
			PLS LOGIC GROUP	PROCESSING	FAILURE UPON	DEMAND	1.16E-03	PL50301ASA
			CCF OF ADS 4TH STAGE SQUIB VALVES		TO OPEN		3.00E-05	ADX-EV-SA
69	7.61E-11	.06	LOSS OF OFFSITE	POWER INITIATING	EVENT OCCURS	WITH RCS DRAINED	5.28E-03	IEV-LOSPD
			FAILURE TO	RECOVER AC POWER	IN 1 HOUR		4.20E-01	OTH-R1
			COMMON CAUSE	FAILURE	4KV BREAKER TO	CLOSE	7.30E-04	ECX-CB-GC
			COMMON CAUSE	FAILURE OF THE	BATTERIES	IDSA-DB-1A/1B	4.70E-05	CCX-BY-PN
70	7.33E-11	.06	LOSS OF CCS/SWS	WITH RCS DRAINED	INITIATING EVENT	OCCURS	7.16E-04	IEV-CCWD
			CCF OF ACTUATION	LOGIC GROUPS			4.63E-05	CCX-PMAMOD1X
			MECHANICAL	FAILURE CAUSES	MOV 023 TO	FAIL-TO-OPEN	2.21E-03	RN23MOD5S
71	7.19E-11	.06	LOSS OF OFFSITE	POWER INITIATING	EVENT OCCURS	WITH RCS DRAINED	5.28E-03	IEV-LOSPD
			FAILURE TO	RECOVER AC POWER	IN 1 HOUR		4.20E-01	OTH-R1
			BATTERY	DB1	UNAVAILABLE		2.70E-03	ED1MOD03
			CCF OF IRWST RECIRC SUMP STRAINERS		PLUGGING		1.20E-05	REX-FL-GP
72	7.19E-11	.06	LOSS OF OFFSITE	POWER INITIATING	EVENT OCCURS	WITH RCS DRAINED	5.28E-03	IEV-LOSPD
			FAILURE TO	RECOVER AC POWER	IN 1 HOUR		4.20E-01	OTH-R1
			BATTERY	DB1	UNAVAILABLE		2.70E-03	ED1MOD03
			CCF OF STRAINERS	IN IRWST TANK			1.20E-05	IWX-FL-GP
73	7.16E-11	.06	LOSS OF CCS/SWS	WITH RCS DRAINED	INITIATING EVENT	OCCURS	7.16E-04	IEV-CCWD
			FAILURE OF	MANUAL DAS	ACTUATION		1.16E-02	REC-MANDAS
			CCF OF THE POWER	INTERFACE OUTPUT	BOARDS IN PMS		8.62E-06	CCX-EP-SAM
74	7.09E-11	.06	LOSS OF RNS WITH	RCS FILLED	INITIATING EVENT	OCCURS	1.02E-03	IEV-RNSND
			COND. PROB. OF	REC-MANDAS	(FAILURE OF MANUAL	DAS ACTUATION)	5.06E-01	REC-MANDASC
			CCF OF PRESSURE	TRANSMITTERS			2.01E-04	CCX-XMTR195
			OPERATOR FAILS	TO RECOGNIZE THE	NEED FOR RCS	DEPRESSURIZATION	6.83E-04	LPM-MAN05

Table 54-6 (Sheet 9 of 25)

AP1000 SHUTDOWN LEVEL 1 PRA TOP 200 CUTSETS

NUMBER	CUTSET PROB	PERCENT	BASIC EVENT NAME				EVENT PROB.	IDENTIFIER
75	7.07E-11	.06	LOSS OF OFFSITE	POWER INITIATING	EVENT OCCURS	WITH RCS DRAINED	5.28E-03	IEV-LOSPD
			OFFSITE	AC POWER	RECOVERED IN	1 HOUR	5.80E-01	SUC-R1S
			CCF TO START	OF THE PUMPS			7.70E-04	RNX-PM-FS
			CCF OF ADS 4TH STAGE SQUIB VALVES TO OPEN				3.00E-05	ADX-EV-SA
76	6.98E-11	.06	LOSS OF RNS WITH	RCS DRAINED	INITIATING EVENT	OCCURS	9.69E-05	IEV-RNSD
			MECHANICAL	FAILURE CAUSES	MOV 121A TO	FAIL-TO-OPEN	3.00E-03	IRWMOD05S
			IRWST DISCHARGE	LINE "B"	STRAINER	PLUGGED	2.40E-04	IWB-PLUG
77	6.92E-11	.06	LOSS OF OFFSITE	POWER INITIATING	EVENT OCCURS	WITH RCS DRAINED	5.28E-03	IEV-LOSPD
			FAILURE TO	RECOVER AC POWER	IN 1 HOUR		4.20E-01	OTH-R1
			COMMON CAUSE	FAILURE	4KV BREAKERS TO	OPEN	1.20E-03	ECX-CB-GO
			CCF OF 6/6 IRWST	HP SQUIB VALVES TO OPEN			2.60E-05	IWX-EV-SA
78	6.92E-11	.06	LOSS OF OFFSITE	POWER INITIATING	EVENT OCCURS	WITH RCS DRAINED	5.28E-03	IEV-LOSPD
			FAILURE TO	RECOVER AC POWER	IN 1 HOUR		4.20E-01	OTH-R1
			COMMON CAUSE	FAILURE	4KV BREAKERS TO	OPEN	1.20E-03	ECX-CB-GO
			CCF OF 2/2 IRWST	LP SQUIB VALVES TO OPEN			2.60E-05	IWX-EV4-SA
79	6.69E-11	.05	LOSS OF OFFSITE	POWER INITIATING	EVENT OCCURS	WITH RCS DRAINED	5.28E-03	IEV-LOSPD
			FAILURE TO	RECOVER AC POWER	IN 1 HOUR		4.20E-01	OTH-R1
			PLS LOGIC GROUP	PROCESSING	FAILURE UPON	DEMAND	1.16E-03	PL50301BSA
			CCF OF 2/2 IRWST	LP SQUIB VALVES TO OPEN			2.60E-05	IWX-EV4-SA
80	6.69E-11	.05	LOSS OF OFFSITE	POWER INITIATING	EVENT OCCURS	WITH RCS DRAINED	5.28E-03	IEV-LOSPD
			FAILURE TO	RECOVER AC POWER	IN 1 HOUR		4.20E-01	OTH-R1
			PLS LOGIC GROUP	PROCESSING	FAILURE UPON	DEMAND	1.16E-03	PL50301ASA
			CCF OF 6/6 IRWST	HP SQUIB VALVES TO OPEN			2.60E-05	IWX-EV-SA
81	6.69E-11	.05	LOSS OF OFFSITE	POWER INITIATING	EVENT OCCURS	WITH RCS DRAINED	5.28E-03	IEV-LOSPD
			FAILURE TO	RECOVER AC POWER	IN 1 HOUR		4.20E-01	OTH-R1
			PLS LOGIC GROUP	PROCESSING	FAILURE UPON	DEMAND	1.16E-03	PL50301ASA
			CCF OF 2/2 IRWST	LP SQUIB VALVES TO OPEN			2.60E-05	IWX-EV4-SA
82	6.69E-11	.05	LOSS OF OFFSITE	POWER INITIATING	EVENT OCCURS	WITH RCS DRAINED	5.28E-03	IEV-LOSPD
			FAILURE TO	RECOVER AC POWER	IN 1 HOUR		4.20E-01	OTH-R1
			PLS LOGIC GROUP	PROCESSING	FAILURE UPON	DEMAND	1.16E-03	PL50301BSA
			CCF OF 6/6 IRWST	HP SQUIB VALVES TO OPEN			2.60E-05	IWX-EV-SA

Table 54-6 (Sheet 10 of 25)

AP1000 SHUTDOWN LEVEL 1 PRA TOP 200 CUTSETS

NUMBER	CUTSET PROB	PERCENT	BASIC EVENT NAME				EVENT PROB.	IDENTIFIER
83	6.39E-11	.05	LOSS OF OFFSITE	POWER INITIATING	EVENT OCCURS	WITH RCS DRAINED	5.28E-03	IEV-LOSPD
			FAILURE TO	RECOVER AC POWER	IN 1 HOUR		4.20E-01	OTH-R1
			COMMON CAUSE	FAILURE	4KV BREAKERS TO	OPEN	1.20E-03	ECX-CB-GO
			COMMON CAUSE	FAILURE OF THE	INVERTER		2.40E-05	CCX-IV-XR
84	6.36E-11	.05	LOSS OF OFFSITE	POWER INITIATING	EVENT OCCURS	WITH RCS DRAINED	5.28E-03	IEV-LOSPD
			FAILURE TO	RECOVER AC POWER	IN 1 HOUR		4.20E-01	OTH-R1
			CCF TO OPEN	OF THE STOP	CHECK VALVES		6.10E-04	RNX-KV-GO
			COMMON CAUSE	FAILURE OF THE	BATTERIES	IDSA-DB-1A/1B	4.70E-05	CCX-BY-PN
85	6.17E-11	.05	LOSS OF OFFSITE	POWER INITIATING	EVENT OCCURS	WITH RCS DRAINED	5.28E-03	IEV-LOSPD
			FAILURE TO	RECOVER AC POWER	IN 1 HOUR		4.20E-01	OTH-R1
			PLS LOGIC GROUP	PROCESSING	FAILURE UPON	DEMAND	1.16E-03	PL50301ASA
			COMMON CAUSE	FAILURE OF THE	INVERTER		2.40E-05	CCX-IV-XR
86	6.17E-11	.05	LOSS OF OFFSITE	POWER INITIATING	EVENT OCCURS	WITH RCS DRAINED	5.28E-03	IEV-LOSPD
			FAILURE TO	RECOVER AC POWER	IN 1 HOUR		4.20E-01	OTH-R1
			PLS LOGIC GROUP	PROCESSING	FAILURE UPON	DEMAND	1.16E-03	PL50301BSA
			COMMON CAUSE	FAILURE OF THE	INVERTER		2.40E-05	CCX-IV-XR
87	6.17E-11	.05	LOSS OF CCS/SWS	WITH RCS DRAINED	INITIATING EVENT	OCCURS	7.16E-04	IEV-CCWD
			FAILURE OF	MANUAL DAS	REACTOR TRIP	HARDWARE	1.00E-02	MDAS
			CCF OF THE POWER	INTERFACE OUTPUT	BOARDS IN PMS		8.62E-06	CCX-EP-SAM
88	6.13E-11	.05	LOSS OF OFFSITE	POWER INITIATING	EVENT OCCURS	WITH RCS DRAINED	5.28E-03	IEV-LOSPD
			OFFSITE	AC POWER	RECOVERED IN	1 HOUR	5.80E-01	SUC-R1S
			CCF OF RNS PUMPS	P01A/B TO START			7.70E-04	RNX-PM-FS
			CCF OF 2/2 IRWST	LP SQUIB VALVES TO OPEN			2.60E-05	IWX-EV4-SA
89	6.13E-11	.05	LOSS OF OFFSITE	POWER INITIATING	EVENT OCCURS	WITH RCS DRAINED	5.28E-03	IEV-LOSPD
			OFFSITE	AC POWER	RECOVERED IN	1 HOUR	5.80E-01	SUC-R1S
			CCF OF RNS PUMPS	P01A/B TO START			7.70E-04	RNX-PM-FS
			CCF OF 6/6 IRWST	HP SQUIB VALVES TO OPEN			2.60E-05	IWX-EV-SA
90	6.08E-11	.05	LOSS OF OFFSITE	POWER INITIATING	EVENT OCCURS	WITH RCS FILLED	1.82E-02	IEV-LOSPND
			FAILURE TO	RECOVER AC POWER	IN 2 HOURS		2.40E-01	OTH-R2
			SOFTWARE CCF	OF ALL CARDS			1.20E-06	CCX-SFTW
			FAILURE OF	MANUAL DAS	ACTUATION		1.16E-02	REC-MANDAS

Table 54-6 (Sheet 11 of 25)

AP1000 SHUTDOWN LEVEL 1 PRA TOP 200 CUTSETS

NUMBER	CUTSET PROB	PERCENT	BASIC EVENT NAME	EVENT PROB.	IDENTIFIER
91	5.99E-11	.05	OVERDRAINING OF RCS DURING DRAIN DOWN TO MID-LOOP INITIATING EVENT	5.28E-06	IEV-RCSOD
			OPERATOR SUCCEEDS IN ISOLATING RNS LEAK	9.45E-01	RHN-MAN04-SUCC
			CCF OF IRWST RECIRC SUMP STRAINERS PLUGGING	1.20E-05	REX-FL-GP
92	5.99E-11	.05	OVERDRAINING OF RCS DURING DRAIN DOWN TO MID-LOOP INITIATING EVENT	5.28E-06	IEV-RCSOD
			OPERATOR SUCCEEDS IN ISOLATING RNS LEAK	9.45E-01	RHN-MAN04-SUCC
			CCF OF STRAINERS IN IRWST TANK	1.20E-05	IWX-FL-GP
93	5.60E-11	.05	LOSS OF OFFSITE POWER INITIATING EVENT OCCURS WITH RCS DRAINED	5.28E-03	IEV-LOSPD
			OFFSITE AC POWER RECOVERED IN 1 HOUR	5.80E-01	SUC-R1S
			CCF TO OPEN OF THE STOP CHECK VALVES	6.10E-04	RNX-KV-GO
			CCF OF ADS 4TH STAGE SQUIB VALVES TO OPEN	3.00E-05	ADX-EV-SA
94	5.56E-11	.05	LOSS OF OFFSITE POWER INITIATING EVENT OCCURS WITH RCS DRAINED	5.28E-03	IEV-LOSPD
			FAILURE TO RECOVER AC POWER IN 1 HOUR	4.20E-01	OTH-R1
			FAILURE OF PLS OUTPUT LOGIC I/Os	2.09E-03	PL5MOD11
			CCF OF IRWST RECIRC SUMP STRAINERS PLUGGING	1.20E-05	REX-FL-GP
95	5.56E-11	.05	LOSS OF OFFSITE POWER INITIATING EVENT OCCURS WITH RCS DRAINED	5.28E-03	IEV-LOSPD
			FAILURE TO RECOVER AC POWER IN 1 HOUR	4.20E-01	OTH-R1
			FAILURE OF PLS OUTPUT LOGIC I/Os	2.09E-03	PL5MOD11
			CCF OF STRAINERS IN IRWST TANK	1.20E-05	IWX-FL-GP
96	5.55E-11	.05	LOSS OF CCS/SWS WITH RCS FILLED INITIATING EVENT OCCURS	3.99E-03	IEV-CCWND
			SOFTWARE CCF OF ALL CARDS	1.20E-06	CCX-SFTW
			FAILURE OF MANUAL DAS ACTUATION	1.16E-02	REC-MANDAS
97	5.32E-11	.04	LOSS OF OFFSITE POWER INITIATING EVENT OCCURS WITH RCS DRAINED	5.28E-03	IEV-LOSPD
			FAILURE TO RECOVER AC POWER IN 1 HOUR	4.20E-01	OTH-R1
			CCF TO START OF ENGINE-DRIVEN FUEL PUMPS	2.00E-03	ZOX-PD-ES
			CCF OF STRAINERS IN IRWST TANK	1.20E-05	IWX-FL-GP
98	5.32E-11	.04	LOSS OF OFFSITE POWER INITIATING EVENT OCCURS WITH RCS DRAINED	5.28E-03	IEV-LOSPD
			FAILURE TO RECOVER AC POWER IN 1 HOUR	4.20E-01	OTH-R1
			CCF TO START OF ENGINE-DRIVEN FUEL PUMPS	2.00E-03	ZOX-PD-ES
			CCF OF IRWST RECIRC SUMP STRAINERS PLUGGING	1.20E-05	REX-FL-GP
99	5.30E-11	.04	LOSS OF CCS/SWS WITH RCS DRAINED INITIATING EVENT OCCURS	7.16E-04	IEV-CCWD
			CCF OF ACTUATION LOGIC GROUPS	4.63E-05	CCX-PMAMOD1X
			OPERATOR FAILS TO RECOGNIZE NEED AND TO OPEN RNS MOV V023	1.60E-03	RHN-MAN05

Table 54-6 (Sheet 12 of 25)

AP1000 SHUTDOWN LEVEL 1 PRA TOP 200 CUTSETS

NUMBER	CUTSET PROB	PERCENT	BASIC EVENT NAME				EVENT PROB.	IDENTIFIER
100	5.25E-11	.04	LOSS OF OFFSITE	POWER INITIATING	EVENT OCCURS	WITH RCS DRAINED	5.28E-03	IEV-LOSPD
			FAILURE TO	RECOVER AC POWER	IN 1 HOUR		4.20E-01	OTH-R1
			FIXED COMPONENT	FAILURES			5.04E-04	ED1MOD01
			COMMON CAUSE	FAILURE OF THE	BATTERIES	IDSA-DB-1A/1B	4.70E-05	CCX-BY-PN
101	5.24E-11	.04	LOSS OF OFFSITE	POWER INITIATING	EVENT OCCURS	WITH RCS FILLED	1.82E-02	IEV-LOSPND
			FAILURE TO	RECOVER AC POWER	IN 2 HOURS		2.40E-01	OTH-R2
			SOFTWARE CCF	OF ALL CARDS			1.20E-06	CCX-SFTW
			FAILURE OF	MANUAL DAS	REACTOR TRIP	HARDWARE	1.00E-02	MDAS
102	5.16E-11	.04	LOSS OF OFFSITE	POWER INITIATING	EVENT OCCURS	WITH RCS DRAINED	5.28E-03	IEV-LOSPD
			FAILURE TO	RECOVER AC POWER	IN 1 HOUR		4.20E-01	OTH-R1
			BATTERY	DB1	UNAVAILABLE		2.70E-03	ED1MOD03
			CCF OF THE POWER	INTERFACE OUTPUT	BOARDS IN PMS		8.62E-06	CCX-EP-SAM
103	5.16E-11	.04	LOSS OF CCS/SWS	WITH RCS DRAINED	INITIATING EVENT	OCCURS	7.16E-04	IEV-CCWD
			IRWST DISCHARGE	LINE "B"	STRAINER	PLUGGED	2.40E-04	IWB-PLUG
			BUS UNAVAILABLE	DUE TO TEST OR	CORRECTIVE	MAINTENANCE	3.00E-04	IDBBSDS1TM
104	5.16E-11	.04	LOSS OF CCS/SWS	WITH RCS DRAINED	INITIATING EVENT	OCCURS	7.16E-04	IEV-CCWD
			IRWST DISCHARGE	LINE "B"	STRAINER	PLUGGED	2.40E-04	IWB-PLUG
			BUS UNAVAILABLE	DUE TO TEST OR	CORRECTIVE	MAINTENANCE	3.00E-04	IDBBSDK1TM
105	5.16E-11	.04	LOSS OF CCS/SWS	WITH RCS DRAINED	INITIATING EVENT	OCCURS	7.16E-04	IEV-CCWD
			IRWST DISCHARGE	LINE "B"	STRAINER	PLUGGED	2.40E-04	IWB-PLUG
			BUS UNAVAILABLE	DUE TO TEST OR	CORRECTIVE	MAINTENANCE	3.00E-04	IDBBSDD1TM
106	5.14E-11	.04	LOSS OF OFFSITE	POWER INITIATING	EVENT OCCURS	WITH RCS DRAINED	5.28E-03	IEV-LOSPD
			FAILURE TO	RECOVER AC POWER	IN 1 HOUR		4.20E-01	OTH-R1
			PUMP MP 01B	SEGMENT HARDWARE	FAILURE OR	DIVERTED FLOW	2.44E-02	SWBMOD02
			D/G FAILS TO	START & RUN OR	BKR 102 FAILS TO	CLOSE	2.02E-02	ZO1MOD01
			COMMON CAUSE	FAILURE OF THE	BATTERIES	IDSA-DB-1A/1B	4.70E-05	CCX-BY-PN
107	5.12E-11	.04	LOSS OF OFFSITE	POWER INITIATING	EVENT OCCURS	WITH RCS DRAINED	5.28E-03	IEV-LOSPD
			FAILURE TO	RECOVER AC POWER	IN 1 HOUR		4.20E-01	OTH-R1
			CCF OF RNS PUMPS	P01A/B TO START			7.70E-04	RNX-PM-FS
			CCF OF ADS 4TH STAGE	SQUIB VALVES	TO OPEN		3.00E-05	ADX-EV-SA

Table 54-6 (Sheet 13 of 25)

AP1000 SHUTDOWN LEVEL 1 PRA TOP 200 CUTSETS

NUMBER	CUTSET PROB	PERCENT	BASIC EVENT NAME				EVENT PROB.	IDENTIFIER
108	4.86E-11	.04	LOSS OF OFFSITE	POWER INITIATING	EVENT OCCURS	WITH RCS DRAINED	5.28E-03	IEV-LOSPD
			OFFSITE	AC POWER	RECOVERED IN	1 HOUR	5.80E-01	SUC-R1S
			CCF TO OPEN	OF THE STOP	CHECK VALVES		6.10E-04	RNX-KV-GO
			CCF OF 6/6 IRWST	HP SQUIB VALVES	TO OPEN		2.60E-05	IWX-EV-SA
109	4.86E-11	.04	LOSS OF OFFSITE	POWER INITIATING	EVENT OCCURS	WITH RCS DRAINED	5.28E-03	IEV-LOSPD
			OFFSITE	AC POWER	RECOVERED IN	1 HOUR	5.80E-01	SUC-R1S
			CCF TO OPEN	OF THE STOP	CHECK VALVES		6.10E-04	RNX-KV-GO
			CCF OF 2/2 IRWST	LP SQUIB VALVES	TO OPEN		2.60E-05	IWX-EV4-SA
110	4.86E-11	.04	LOSS OF OFFSITE	POWER INITIATING	EVENT OCCURS	WITH RCS DRAINED	5.28E-03	IEV-LOSPD
			FAILURE TO	RECOVER AC POWER	IN 1 HOUR		4.20E-01	OTH-R1
			COMMON CAUSE	FAILURE	4KV BREAKER TO	CLOSE	7.30E-04	ECX-CB-GC
			CCF OF ADS 4TH	STAGE SQUIB VALVES	TO OPEN		3.00E-05	ADX-EV-SA
111	4.79E-11	.04	LOSS OF CCS/SWS	WITH RCS FILLED	INITIATING EVENT	OCCURS	3.99E-03	IEV-CCWND
			SOFTWARE CCF	OF ALL CARDS			1.20E-06	CCX-SFTW
			FAILURE OF	MANUAL DAS	REACTOR TRIP	HARDWARE	1.00E-02	MDAS
112	4.75E-11	.04	LOSS OF CCS/SWS	WITH RCS DRAINED	INITIATING EVENT	OCCURS	7.16E-04	IEV-CCWD
			CCF OF GRAVITY	INJECTION CHECK	VALVES TO OPEN		3.00E-05	IWX-CV-AO
			MECHANICAL	FAILURE CAUSES	MOV 023 TO	FAIL-TO-OPEN	2.21E-03	RN23MOD5S
113	4.59E-11	.04	LOSS OF OFFSITE	POWER INITIATING	EVENT OCCURS	WITH RCS DRAINED	5.28E-03	IEV-LOSPD
			FAILURE TO	RECOVER AC POWER	IN 1 HOUR		4.20E-01	OTH-R1
			COMMON CAUSE	FAILURE	STANDBY DG TO	RUN	4.40E-04	ZOX-DG-DR
			COMMON CAUSE	FAILURE OF THE	BATTERIES	IDSA-DB-1A/1B	4.70E-05	CCX-BY-PN
114	4.44E-11	.04	LOSS OF OFFSITE	POWER INITIATING	EVENT OCCURS	WITH RCS DRAINED	5.28E-03	IEV-LOSPD
			FAILURE TO	RECOVER AC POWER	IN 1 HOUR		4.20E-01	OTH-R1
			CCF OF RNS PUMPS	P01A/B TO START			7.70E-04	RNX-PM-FS
			CCF OF 2/2 IRWST	LP SQUIB VALVES	TO OPEN		2.60E-05	IWX-EV4-SA
115	4.44E-11	.04	LOSS OF OFFSITE	POWER INITIATING	EVENT OCCURS	WITH RCS DRAINED	5.28E-03	IEV-LOSPD
			FAILURE TO	RECOVER AC POWER	IN 1 HOUR		4.20E-01	OTH-R1
			CCF OF RNS PUMPS	P01A/B TO START			7.70E-04	RNX-PM-FS
			CCF OF 6/6 IRWST	HP SQUIB VALVES	TO OPEN		2.60E-05	IWX-EV-SA

Table 54-6 (Sheet 14 of 25)

AP1000 SHUTDOWN LEVEL 1 PRA TOP 200 CUTSETS

NUMBER	CUTSET PROB	PERCENT	BASIC EVENT NAME				EVENT PROB.	IDENTIFIER
116	4.25E-11	.03	LOSS OF OFFSITE	POWER INITIATING	EVENT OCCURS	WITH RCS DRAINED	5.28E-03	IEV-LOSPD
			FAILURE TO	RECOVER AC POWER	IN 1 HOUR		4.20E-01	OTH-R1
			D/G FAILS TO	START & RUN OR	BKR 102 FAILS TO	CLOSE	2.02E-02	ZO1MOD01
			D/G FAILS TO	START & RUN OR	BKR 202 FAILS TO	CLOSE	2.02E-02	ZO2MOD01
			COMMON CAUSE	FAILURE OF THE	BATTERIES	IDSA-DB-1A/1B	4.70E-05	CCX-BY-PN
117	4.21E-11	.03	LOSS OF OFFSITE	POWER INITIATING	EVENT OCCURS	WITH RCS DRAINED	5.28E-03	IEV-LOSPD
			FAILURE TO	RECOVER AC POWER	IN 1 HOUR		4.20E-01	OTH-R1
			COMMON CAUSE	FAILURE	4KV BREAKER TO	CLOSE	7.30E-04	ECX-CB-GC
			CCF OF 6/6 IRWST	HP SQUIB VALVES	TO OPEN		2.60E-05	IWX-EV-SA
118	4.21E-11	.03	LOSS OF OFFSITE	POWER INITIATING	EVENT OCCURS	WITH RCS DRAINED	5.28E-03	IEV-LOSPD
			FAILURE TO	RECOVER AC POWER	IN 1 HOUR		4.20E-01	OTH-R1
			COMMON CAUSE	FAILURE	4KV BREAKER TO	CLOSE	7.30E-04	ECX-CB-GC
			CCF OF 2/2 IRWST	LP SQUIB VALVES	TO OPEN		2.60E-05	IWX-EV4-SA
119	4.17E-11	.03	LOCA/RNS-V024	OPENS INITIATING	EVENT OCCURS	WITH RCS DRAINED	1.15E-05	IEV-LOCA24D
			CCF OF ORIFICES				3.63E-06	CCX-ORY-SPX
120	4.12E-11	.03	LOSS OF CCS/SWS	WITH RCS DRAINED	INITIATING EVENT	OCCURS	7.16E-04	IEV-CCWD
			SUMP SCREEN A PLUGS AND PREVENTS FLOW				2.40E-04	REA-PLUG
			SUMP SCREEN B PLUGS AND PREVENTS FLOW				2.40E-04	REB-PLUG
121	4.12E-11	.03	LOSS OF CCS/SWS	WITH RCS DRAINED	INITIATING EVENT	OCCURS	7.16E-04	IEV-CCWD
			IRWST DISCHARGE	LINE "A"	STRAINER	PLUGGED	2.40E-04	IWA-PLUG
			IRWST DISCHARGE	LINE "B"	STRAINER	PLUGGED	2.40E-04	IWB-PLUG
122	4.10E-11	.03	LOSS OF OFFSITE	POWER INITIATING	EVENT OCCURS	WITH RCS DRAINED	5.28E-03	IEV-LOSPD
			FAILURE TO	RECOVER AC POWER	IN 1 HOUR		4.20E-01	OTH-R1
			CCF OF RNS PUMPS	P01A/B TO START			7.70E-04	RNX-PM-FS
			COMMON CAUSE	FAILURE OF THE	INVERTER		2.40E-05	CCX-IV-XR
123	4.06E-11	.03	LOSS OF OFFSITE	POWER INITIATING	EVENT OCCURS	WITH RCS DRAINED	5.28E-03	IEV-LOSPD
			FAILURE TO	RECOVER AC POWER	IN 1 HOUR		4.20E-01	OTH-R1
			CCF TO OPEN	OF THE STOP	CHECK VALVES		6.10E-04	RNX-KV-GO
			CCF OF ADS 4TH STAGE	SQUIB VALVES	TO OPEN		3.00E-05	ADX-EV-SA

Table 54-6 (Sheet 15 of 25)

AP1000 SHUTDOWN LEVEL 1 PRA TOP 200 CUTSETS

NUMBER	CUTSET PROB	PERCENT	BASIC EVENT NAME				EVENT PROB.	IDENTIFIER
124	4.00E-11	.03	LOSS OF OFFSITE	POWER INITIATING	EVENT OCCURS	WITH RCS DRAINED	5.28E-03	IEV-LOSPD
			FAILURE TO	RECOVER AC POWER	IN 1 HOUR		4.20E-01	OTH-R1
			FAILURE OF	PLS OUTPUT	LOGIC I/Os		2.09E-03	PL5MOD11
			CCF OF THE POWER	INTERFACE OUTPUT	BOARDS IN PMS		8.62E-06	CCX-EP-SAM
125	3.89E-11	.03	LOSS OF OFFSITE	POWER INITIATING	EVENT OCCURS	WITH RCS DRAINED	5.28E-03	IEV-LOSPD
			FAILURE TO	RECOVER AC POWER	IN 1 HOUR		4.20E-01	OTH-R1
			COMMON CAUSE	FAILURE	4KV BREAKER TO	CLOSE	7.30E-04	ECX-CB-GC
			COMMON CAUSE	FAILURE OF THE	INVERTER		2.40E-05	CCX-IV-XR
126	3.82E-11	.03	LOSS OF OFFSITE	POWER INITIATING	EVENT OCCURS	WITH RCS DRAINED	5.28E-03	IEV-LOSPD
			FAILURE TO	RECOVER AC POWER	IN 1 HOUR		4.20E-01	OTH-R1
			CCF TO START	OF ENGINE-DRIVEN	FUEL PUMPS		2.00E-03	ZOX-PD-ES
			CCF OF THE POWER	INTERFACE OUTPUT	BOARDS IN PMS		8.62E-06	CCX-EP-SAM
127	3.63E-11	.03	LOSS OF RNS WITH	RCS FILLED	INITIATING EVENT OCCURS		1.02E-03	IEV-RNSND
			COND. PROB. OF	REC-MANDAS	(FAILURE OF MANUAL DAS ACTUATION)		5.06E-01	REC-MANDASC
			COMMON MODE	FAILURE OF INPUT	LOGIC GROUPS		1.03E-04	CCX-INPUT-LOGIC
			OPERATOR FAILS	TO RECOGNIZE THE	NEED FOR RCS	DEPRESSURIZATION	6.83E-04	LPM-MAN05
128	3.52E-11	.03	LOSS OF OFFSITE	POWER INITIATING	EVENT OCCURS	WITH RCS DRAINED	5.28E-03	IEV-LOSPD
			FAILURE TO	RECOVER AC POWER	IN 1 HOUR		4.20E-01	OTH-R1
			CCF TO OPEN	OF THE STOP	CHECK VALVES		6.10E-04	RNX-KV-GO
			CCF OF 6/6 IRWST	HP SQUIB VALVES TO OPEN			2.60E-05	IWX-EV-SA
129	3.52E-11	.03	LOSS OF OFFSITE	POWER INITIATING	EVENT OCCURS	WITH RCS DRAINED	5.28E-03	IEV-LOSPD
			FAILURE TO	RECOVER AC POWER	IN 1 HOUR		4.20E-01	OTH-R1
			CCF TO OPEN	OF THE STOP	CHECK VALVES		6.10E-04	RNX-KV-GO
			CCF OF 2/2 IRWST	LP SQUIB VALVES TO OPEN			2.60E-05	IWX-EV4-SA
130	3.48E-11	.03	LOCA/RNS-V024	OPENS INITIATING	EVENT OCCURS	WITH RCS FILLED	1.73E-05	IEV-LOCA24ND
			CCF OF IRWST TANK	LEVEL TRANSMITTER			2.01E-04	IWX-XMTR
			OPERATOR FAILS TO ACTUATE SUMP RECIRC WHEN IRWST SIGNAL FAILS				1.00E-02	REN-MAN04
131	3.44E-11	.03	LOSS OF CCS/SWS	WITH RCS DRAINED	INITIATING EVENT OCCURS		7.16E-04	IEV-CCWD
			CCF OF GRAVITY	INJECTION CHECK	VALVES TO OPEN		3.00E-05	IWX-CV-AO
			OPERATOR FAILS	TO RECOGNIZE	NEED AND TO OPEN RNS MOV V023		1.60E-03	RHN-MAN05

Table 54-6 (Sheet 16 of 25)

AP1000 SHUTDOWN LEVEL 1 PRA TOP 200 CUTSETS

NUMBER	CUTSET PROB	PERCENT	BASIC EVENT NAME				EVENT PROB.	IDENTIFIER
132	3.35E-11	.03	LOSS OF OFFSITE	POWER INITIATING	EVENT OCCURS	WITH RCS DRAINED	5.28E-03	IEV-LOSPD
			FAILURE TO	RECOVER AC POWER	IN 1 HOUR		4.20E-01	OTH-R1
			FIXED COMPONENT	FAILURES			5.04E-04	ED1MOD01
			CCF OF ADS 4TH STAGE SQUIB VALVES TO OPEN				3.00E-05	ADX-EV-SA
133	3.30E-11	.03	LOSS OF OFFSITE	POWER INITIATING	EVENT OCCURS	WITH RCS DRAINED	5.28E-03	IEV-LOSPD
			FAILURE TO	RECOVER AC POWER	IN 1 HOUR		4.20E-01	OTH-R1
			FIXED	COMPONENTS	FAILURE		3.17E-04	ED1MOD13
			COMMON CAUSE	FAILURE OF THE	BATTERIES	IDSA-DB-1A/1B	4.70E-05	CCX-BY-PN
134	3.30E-11	.03	LOSS OF OFFSITE	POWER INITIATING	EVENT OCCURS	WITH RCS DRAINED	5.28E-03	IEV-LOSPD
			FAILURE TO	RECOVER AC POWER	IN 1 HOUR		4.20E-01	OTH-R1
			FIXED	COMPONENTS	FAILURE		3.17E-04	ED1MOD113
			COMMON CAUSE	FAILURE OF THE	BATTERIES	IDSA-DB-1A/1B	4.70E-05	CCX-BY-PN
135	3.30E-11	.03	LOSS OF OFFSITE	POWER INITIATING	EVENT OCCURS	WITH RCS DRAINED	5.28E-03	IEV-LOSPD
			FAILURE TO	RECOVER AC POWER	IN 1 HOUR		4.20E-01	OTH-R1
			FIXED	COMPONENTS	FAILURE		3.17E-04	ED1MOD11
			COMMON CAUSE	FAILURE OF THE	BATTERIES	IDSA-DB-1A/1B	4.70E-05	CCX-BY-PN
136	3.28E-11	.03	LOSS OF OFFSITE	POWER INITIATING	EVENT OCCURS	WITH RCS DRAINED	5.28E-03	IEV-LOSPD
			FAILURE TO	RECOVER AC POWER	IN 1 HOUR		4.20E-01	OTH-R1
			PUMP MP 01B	SEGMENT HARDWARE	FAILURE OR	DIVERTED FLOW	2.44E-02	SWBMOD02
			D/G FAILS TO	START & RUN OR	BKR 102 FAILS TO	CLOSE	2.02E-02	ZO1MOD01
			CCF OF ADS 4TH STAGE SQUIB VALVES TO OPEN				3.00E-05	ADX-EV-SA
137	3.25E-11	.03	LOSS OF OFFSITE	POWER INITIATING	EVENT OCCURS	WITH RCS DRAINED	5.28E-03	IEV-LOSPD
			FAILURE TO	RECOVER AC POWER	IN 1 HOUR		4.20E-01	OTH-R1
			CCF TO OPEN	OF THE STOP	CHECK VALVES		6.10E-04	RNX-KV-GO
			COMMON CAUSE	FAILURE OF THE	INVERTER		2.40E-05	CCX-IV-XR
138	3.22E-11	.03	LOSS OF OFFSITE	POWER INITIATING	EVENT OCCURS	WITH RCS DRAINED	5.28E-03	IEV-LOSPD
			FAILURE TO	RECOVER AC POWER	IN 1 HOUR		4.20E-01	OTH-R1
			PUMP 01A FAILS;	STOP CK V007A,	CB & RELAY FTC;	CB ECS122 SPO	1.53E-02	RNAMOD06S
			D/G FAILS TO	START & RUN OR	BKR 202 FAILS TO	CLOSE	2.02E-02	ZO2MOD01
			COMMON CAUSE	FAILURE OF THE	BATTERIES	IDSA-DB-1A/1B	4.70E-05	CCX-BY-PN

Table 54-6 (Sheet 17 of 25)

AP1000 SHUTDOWN LEVEL 1 PRA TOP 200 CUTSETS

NUMBER	CUTSET PROB	PERCENT	BASIC EVENT NAME				EVENT PROB.	IDENTIFIER
139	3.22E-11	.03	LOSS OF OFFSITE	POWER INITIATING	EVENT OCCURS	WITH RCS DRAINED	5.28E-03	IEV-LOSPD
			FAILURE TO	RECOVER AC POWER	IN 1 HOUR		4.20E-01	OTH-R1
			PUMP 01B FAILS &	ST CK V007B & C	B FTC & RE FTC &	CB ECS221 SPO	1.53E-02	RNBMOD07S
			D/G FAILS TO	START & RUN OR	BKR 102 FAILS TO	CLOSE	2.02E-02	Z01MOD01
			COMMON CAUSE	FAILURE OF THE	BATTERIES	IDSA-DB-1A/1B	4.70E-05	CCX-BY-PN
140	3.21E-11	.03	OVERDRAINING OF	RCS DURING DRAIN	DOWN TO MID-LOOP	INITIATING EVENT	5.28E-06	IEV-RCSOD
			OPERATOR FAILS	TO ISOLATE	RNS PIPE RUPTURE		5.50E-02	RHN-MAN04
			COND. PROB. OF	IWN-MAN00 (OP.	FAILS TO ACTUATE	IRWST INJ)	5.00E-02	IWN-MAN00C
			MECHANICAL	FAILURE CAUSES	MOV 023 TO	FAIL-TO-OPEN	2.21E-03	RN23MOD5S
141	3.19E-11	.03	LOSS OF OFFSITE	POWER INITIATING	EVENT OCCURS	WITH RCS DRAINED	5.28E-03	IEV-LOSPD
			FAILURE TO	RECOVER AC POWER	IN 1 HOUR		4.20E-01	OTH-R1
			COMMON CAUSE	FAILURE	4KV BREAKERS TO	OPEN	1.20E-03	ECX-CB-GO
			CCF OF STRAINERS	IN IRWST TANK			1.20E-05	IWX-FL-GP
142	3.19E-11	.03	LOSS OF OFFSITE	POWER INITIATING	EVENT OCCURS	WITH RCS DRAINED	5.28E-03	IEV-LOSPD
			FAILURE TO	RECOVER AC POWER	IN 1 HOUR		4.20E-01	OTH-R1
			COMMON CAUSE	FAILURE	4KV BREAKERS TO	OPEN	1.20E-03	ECX-CB-GO
			CCF OF IRWST RECIRC	SUMP STRAINERS	PLUGGING		1.20E-05	REX-FL-GP
143	3.18E-11	.03	LOSS OF OFFSITE	POWER INITIATING	EVENT OCCURS	WITH RCS DRAINED	5.28E-03	IEV-LOSPD
			FAILURE TO	RECOVER AC POWER	IN 1 HOUR		4.20E-01	OTH-R1
			EDS1 EA 1 DISTR.	PNL FAILURE OR	T&M		3.05E-04	ED1MOD07
			COMMON CAUSE	FAILURE OF THE	BATTERIES	IDSA-DB-1A/1B	4.70E-05	CCX-BY-PN
144	3.13E-11	.03	LOSS OF OFFSITE	POWER INITIATING	EVENT OCCURS	WITH RCS DRAINED	5.28E-03	IEV-LOSPD
			FAILURE TO	RECOVER AC POWER	IN 1 HOUR		4.20E-01	OTH-R1
			PUMP MP 01B	SEGMENT HARDWARE	FAILURE OR	DIVERTED FLOW	2.44E-02	SWBMOD02
			BREAKER 100	FAILS TO OPEN		[#3,5]	1.23E-02	EC1CB100VO
			COMMON CAUSE	FAILURE OF THE	BATTERIES	IDSA-DB-1A/1B	4.70E-05	CCX-BY-PN
145	3.09E-11	.03	LOSS OF OFFSITE	POWER INITIATING	EVENT OCCURS	WITH RCS DRAINED	5.28E-03	IEV-LOSPD
			FAILURE TO	RECOVER AC POWER	IN 1 HOUR		4.20E-01	OTH-R1
			PLS LOGIC GROUP	PROCESSING	FAILURE UPON	DEMAND	1.16E-03	PL50301BSA
			CCF OF STRAINERS	IN IRWST TANK			1.20E-05	IWX-FL-GP

Table 54-6 (Sheet 18 of 25)

AP1000 SHUTDOWN LEVEL 1 PRA TOP 200 CUTSETS

NUMBER	CUTSET PROB	PERCENT	BASIC EVENT NAME				EVENT PROB.	IDENTIFIER
146	3.09E-11	.03	LOSS OF OFFSITE	POWER INITIATING	EVENT OCCURS	WITH RCS DRAINED	5.28E-03	IEV-LOSPD
			FAILURE TO	RECOVER AC POWER	IN 1 HOUR		4.20E-01	OTH-R1
			PLS LOGIC GROUP	PROCESSING	FAILURE UPON	DEMAND	1.16E-03	PL50301BSA
			CCF OF IRWST RECIRC SUMP STRAINERS PLUGGING				1.20E-05	REX-FL-GP
147	3.09E-11	.03	LOSS OF OFFSITE	POWER INITIATING	EVENT OCCURS	WITH RCS DRAINED	5.28E-03	IEV-LOSPD
			FAILURE TO	RECOVER AC POWER	IN 1 HOUR		4.20E-01	OTH-R1
			PLS LOGIC GROUP	PROCESSING	FAILURE UPON	DEMAND	1.16E-03	PL50301ASA
			CCF OF STRAINERS IN IRWST TANK				1.20E-05	IWX-FL-GP
148	3.09E-11	.03	LOSS OF OFFSITE	POWER INITIATING	EVENT OCCURS	WITH RCS DRAINED	5.28E-03	IEV-LOSPD
			FAILURE TO	RECOVER AC POWER	IN 1 HOUR		4.20E-01	OTH-R1
			PLS LOGIC GROUP	PROCESSING	FAILURE UPON	DEMAND	1.16E-03	PL50301ASA
			CCF OF IRWST RECIRC SUMP STRAINERS PLUGGING				1.20E-05	REX-FL-GP
149	3.02E-11	.02	LOCA/RNS-V024	OPENS INITIATING	EVENT OCCURS	WITH RCS DRAINED	1.15E-05	IEV-LOCA24D
			CCF OF PRESSURE	TRANSMITTERS			2.63E-06	CCX-XMTRX
150	2.93E-11	.02	LOSS OF OFFSITE	POWER INITIATING	EVENT OCCURS	WITH RCS DRAINED	5.28E-03	IEV-LOSPD
			FAILURE TO	RECOVER AC POWER	IN 1 HOUR		4.20E-01	OTH-R1
			COMMON CAUSE	FAILURE	STANDBY DG TO	RUN	4.40E-04	ZOX-DG-DR
			CCF OF ADS 4TH STAGE SQUIB VALVES TO OPEN				3.00E-05	ADX-EV-SA
151	2.92E-11	.02	LOSS OF OFFSITE	POWER INITIATING	EVENT OCCURS	WITH RCS DRAINED	5.28E-03	IEV-LOSPD
			FAILURE TO	RECOVER AC POWER	IN 1 HOUR		4.20E-01	OTH-R1
			COMMON CAUSE	FAILURE	STANDBY DG TO	START	2.80E-04	ZOX-DG-DS
			COMMON CAUSE	FAILURE OF THE	BATTERIES	IDSA-DB-1A/1B	4.70E-05	CCX-BY-PN
152	2.91E-11	.02	LOSS OF OFFSITE	POWER INITIATING	EVENT OCCURS	WITH RCS DRAINED	5.28E-03	IEV-LOSPD
			FAILURE TO	RECOVER AC POWER	IN 1 HOUR		4.20E-01	OTH-R1
			FIXED COMPONENT	FAILURES			5.04E-04	ED1MOD01
			CCF OF 2/2 IRWST LP SQUIB VALVES TO OPEN				2.60E-05	IWX-EV4-SA
153	2.91E-11	.02	LOSS OF OFFSITE	POWER INITIATING	EVENT OCCURS	WITH RCS DRAINED	5.28E-03	IEV-LOSPD
			FAILURE TO	RECOVER AC POWER	IN 1 HOUR		4.20E-01	OTH-R1
			FIXED COMPONENT	FAILURES			5.04E-04	ED1MOD01
			CCF OF 6/6 IRWST HP SQUIB VALVES TO OPEN				2.60E-05	IWX-EV-SA

Table 54-6 (Sheet 19 of 25)

AP1000 SHUTDOWN LEVEL 1 PRA TOP 200 CUTSETS

NUMBER	CUTSET PROB	PERCENT	BASIC EVENT NAME				EVENT PROB.	IDENTIFIER
154	2.84E-11	.02	LOSS OF OFFSITE	POWER INITIATING	EVENT OCCURS	WITH RCS DRAINED	5.28E-03	IEV-LOSPD
			FAILURE TO	RECOVER AC POWER	IN 1 HOUR		4.20E-01	OTH-R1
			PUMP MP 01B	SEGMENT HARDWARE	FAILURE OR	DIVERTED FLOW	2.44E-02	SWBMOD02
			D/G FAILS TO	START & RUN OR	BKR 102 FAILS TO	CLOSE	2.02E-02	ZO1MOD01
			CCF OF 2/2 IRWST	LP SQUIB VALVES	TO OPEN		2.60E-05	IWX-EV4-SA
155	2.84E-11	.02	LOSS OF OFFSITE	POWER INITIATING	EVENT OCCURS	WITH RCS DRAINED	5.28E-03	IEV-LOSPD
			FAILURE TO	RECOVER AC POWER	IN 1 HOUR		4.20E-01	OTH-R1
			PUMP MP 01B	SEGMENT HARDWARE	FAILURE OR	DIVERTED FLOW	2.44E-02	SWBMOD02
			D/G FAILS TO	START & RUN OR	BKR 102 FAILS TO	CLOSE	2.02E-02	ZO1MOD01
			CCF OF 6/6 IRWST	HP SQUIB VALVES	TO OPEN		2.60E-05	IWX-EV-SA
156	2.83E-11	.02	LOSS OF OFFSITE	POWER INITIATING	EVENT OCCURS	WITH RCS DRAINED	5.28E-03	IEV-LOSPD
			OFFSITE	AC POWER	RECOVERED IN	1 HOUR	5.80E-01	SUC-R1S
			CCF OF RNS PUMPS	P01A/B TO START			7.70E-04	RNX-PM-FS
			CCF OF IRWST RECIRC	SUMP STRAINERS	PLUGGING		1.20E-05	REX-FL-GP
157	2.83E-11	.02	LOSS OF OFFSITE	POWER INITIATING	EVENT OCCURS	WITH RCS DRAINED	5.28E-03	IEV-LOSPD
			OFFSITE	AC POWER	RECOVERED IN	1 HOUR	5.80E-01	SUC-R1S
			CCF OF RNS PUMPS	P01A/B TO START			7.70E-04	RNX-PM-FS
			CCF OF STRAINERS	IN IRWST TANK			1.20E-05	IWX-FL-GP
158	2.77E-11	.02	LOSS OF OFFSITE	POWER INITIATING	EVENT OCCURS	WITH RCS DRAINED	5.28E-03	IEV-LOSPD
			FAILURE TO	RECOVER AC POWER	IN 1 HOUR		4.20E-01	OTH-R1
			BATTERY	DB1	UNAVAILABLE		2.70E-03	ED1MOD03
			FAILURE OF	PMS OUTPUT	LOGIC I/Os		2.09E-03	PMAMOD11
			MECHANICAL	FAILURE CAUSES	MOV 023 TO	FAIL-TO-OPEN	2.21E-03	RN23MOD5S
159	2.71E-11	.02	LOSS OF OFFSITE	POWER INITIATING	EVENT OCCURS	WITH RCS DRAINED	5.28E-03	IEV-LOSPD
			FAILURE TO	RECOVER AC POWER	IN 1 HOUR		4.20E-01	OTH-R1
			D/G FAILS TO	START & RUN OR	BKR 102 FAILS TO	CLOSE	2.02E-02	ZO1MOD01
			D/G FAILS TO	START & RUN OR	BKR 202 FAILS TO	CLOSE	2.02E-02	ZO2MOD01
			CCF OF ADS 4TH	STAGE SQUIB VALVES	TO OPEN		3.00E-05	ADX-EV-SA
160	2.68E-11	.02	LOSS OF OFFSITE	POWER INITIATING	EVENT OCCURS	WITH RCS DRAINED	5.28E-03	IEV-LOSPD
			FAILURE TO	RECOVER AC POWER	IN 1 HOUR		4.20E-01	OTH-R1
			FIXED COMPONENT	FAILURES			5.04E-04	ED1MOD01
			COMMON CAUSE	FAILURE OF THE	INVERTER		2.40E-05	CCX-IV-XR

Table 54-6 (Sheet 20 of 25)

AP1000 SHUTDOWN LEVEL 1 PRA TOP 200 CUTSETS

NUMBER	CUTSET PROB	PERCENT	BASIC EVENT NAME				EVENT PROB.	IDENTIFIER
161	2.66E-11	.02	LOCA/RNS PIPE	RUPTURE WITH RCS	FILLED INIT.	EVENT OCCURS	1.61E-05	IEV-LOCAPRND
			OPERATOR FAILS	TO ISOLATE	RNS PIPE RUPTURE		5.50E-02	RHN-MAN04
			CCF OF GRAVITY	INJECTION CHECK	VALVES TO OPEN		3.00E-05	IWX-CV-AO
162	2.66E-11	.02	LOCA/RNS PIPE	RUPTURE WITH RCS	FILLED INIT.	EVENT OCCURS	1.61E-05	IEV-LOCAPRND
			OPERATOR FAILS	TO ISOLATE	RNS PIPE RUPTURE		5.50E-02	RHN-MAN04
			CCF OF ADS 4TH STAGE SQUIB VALVES TO OPEN				3.00E-05	ADX-EV-SA
163	2.62E-11	.02	LOSS OF OFFSITE	POWER INITIATING	EVENT OCCURS	WITH RCS DRAINED	5.28E-03	IEV-LOSPD
			FAILURE TO	RECOVER AC POWER	IN 1 HOUR		4.20E-01	OTH-R1
			PUMP MP 01B	SEGMENT HARDWARE	FAILURE OR	DIVERTED FLOW	2.44E-02	SWBMOD02
			D/G FAILS TO	START & RUN OR	BKR 102 FAILS TO	CLOSE	2.02E-02	ZO1MOD01
			COMMON CAUSE	FAILURE OF THE	INVERTER		2.40E-05	CCX-IV-XR
164	2.59E-11	.02	LOSS OF OFFSITE	POWER INITIATING	EVENT OCCURS	WITH RCS DRAINED	5.28E-03	IEV-LOSPD
			FAILURE TO	RECOVER AC POWER	IN 1 HOUR		4.20E-01	OTH-R1
			BREAKER 100	FAILS TO OPEN		[#3,5]	1.23E-02	EC1CB100VO
			D/G FAILS TO	START & RUN OR	BKR 202 FAILS TO	CLOSE	2.02E-02	ZO2MOD01
			COMMON CAUSE	FAILURE OF THE	BATTERIES	IDSA-DB-1A/1B	4.70E-05	CCX-BY-PN
165	2.59E-11	.02	LOSS OF OFFSITE	POWER INITIATING	EVENT OCCURS	WITH RCS DRAINED	5.28E-03	IEV-LOSPD
			FAILURE TO	RECOVER AC POWER	IN 1 HOUR		4.20E-01	OTH-R1
			D/G FAILS TO	START & RUN OR	BKR 102 FAILS TO	CLOSE	2.02E-02	ZO1MOD01
			BREAKER 200	FAILS TO OPEN		[#5,3]	1.23E-02	EC2CB200VO
			COMMON CAUSE	FAILURE OF THE	BATTERIES	IDSA-DB-1A/1B	4.70E-05	CCX-BY-PN
166	2.54E-11	.02	LOSS OF OFFSITE	POWER INITIATING	EVENT OCCURS	WITH RCS DRAINED	5.28E-03	IEV-LOSPD
			FAILURE TO	RECOVER AC POWER	IN 1 HOUR		4.20E-01	OTH-R1
			COMMON CAUSE	FAILURE	STANDBY DG TO	RUN	4.40E-04	ZOX-DG-DR
			CCF OF 2/2 IRWST LP SQUIB VALVES TO OPEN				2.60E-05	IWX-EV4-SA
167	2.54E-11	.02	LOSS OF OFFSITE	POWER INITIATING	EVENT OCCURS	WITH RCS DRAINED	5.28E-03	IEV-LOSPD
			FAILURE TO	RECOVER AC POWER	IN 1 HOUR		4.20E-01	OTH-R1
			COMMON CAUSE	FAILURE	STANDBY DG TO	RUN	4.40E-04	ZOX-DG-DR
			CCF OF 6/6 IRWST HP SQUIB VALVES TO OPEN				2.60E-05	IWX-EV-SA

Table 54-6 (Sheet 21 of 25)

AP1000 SHUTDOWN LEVEL 1 PRA TOP 200 CUTSETS

NUMBER	CUTSET PROB	PERCENT	BASIC EVENT NAME				EVENT PROB.	IDENTIFIER
168	2.44E-11	.02	LOSS OF OFFSITE	POWER INITIATING	EVENT OCCURS	WITH RCS DRAINED	5.28E-03	IEV-LOSPD
			FAILURE TO	RECOVER AC POWER	IN 1 HOUR		4.20E-01	OTH-R1
			PUMP 01A FAILS;	STOP CK V007A,	CB & RELAY FTC;	CB ECS122 SPO	1.53E-02	RNAMOD06S
			PUMP 01B FAILS &	ST CK V007B & C	B FTC & RE FTC &	CB ECS221 SPO	1.53E-02	RNBMOD07S
			COMMON CAUSE	FAILURE OF THE	BATTERIES	IDSA-DB-1A/1B	4.70E-05	CCX-BY-PN
169	2.35E-11	.02	LOSS OF OFFSITE	POWER INITIATING	EVENT OCCURS	WITH RCS DRAINED	5.28E-03	IEV-LOSPD
			FAILURE TO	RECOVER AC POWER	IN 1 HOUR		4.20E-01	OTH-R1
			D/G FAILS TO	START & RUN OR	BKR 102 FAILS TO	CLOSE	2.02E-02	ZO1MOD01
			D/G FAILS TO	START & RUN OR	BKR 202 FAILS TO	CLOSE	2.02E-02	ZO2MOD01
			CCF OF 6/6 IRWST	HP SQUIB VALVES	TO OPEN		2.60E-05	IWX-EV-SA
170	2.35E-11	.02	LOSS OF OFFSITE	POWER INITIATING	EVENT OCCURS	WITH RCS DRAINED	5.28E-03	IEV-LOSPD
			FAILURE TO	RECOVER AC POWER	IN 1 HOUR		4.20E-01	OTH-R1
			D/G FAILS TO	START & RUN OR	BKR 102 FAILS TO	CLOSE	2.02E-02	ZO1MOD01
			D/G FAILS TO	START & RUN OR	BKR 202 FAILS TO	CLOSE	2.02E-02	ZO2MOD01
			CCF OF 2/2 IRWST	LP SQUIB VALVES	TO OPEN		2.60E-05	IWX-EV4-SA
171	2.34E-11	.02	LOSS OF OFFSITE	POWER INITIATING	EVENT OCCURS	WITH RCS DRAINED	5.28E-03	IEV-LOSPD
			FAILURE TO	RECOVER AC POWER	IN 1 HOUR		4.20E-01	OTH-R1
			COMMON CAUSE	FAILURE	STANDBY DG TO	RUN	4.40E-04	ZOX-DG-DR
			COMMON CAUSE	FAILURE OF THE	INVERTER		2.40E-05	CCX-IV-XR
172	2.31E-11	.02	LOCA/RNS-V024	OPENS INITIATING	EVENT OCCURS	WITH RCS DRAINED	1.15E-05	IEV-LOCA24D
			CCF OF IRWST TANK	LEVEL TRANSMITTER			2.01E-04	IWX-XMTR
			OPERATOR FAILS TO	ACTUATE SUMP RECIRC	WHEN IRWST	SIGNAL FAILS	1.00E-02	REN-MAN04
173	2.30E-11	.02	LOCA/RNS PIPE	RUPTURE WITH RCS	FILLED INIT.	EVENT OCCURS	1.61E-05	IEV-LOCAPRND
			OPERATOR FAILS	TO ISOLATE	RNS PIPE RUPTURE		5.50E-02	RHN-MAN04
			CCF OF 2/2 IRWST	LP SQUIB VALVES	TO OPEN		2.60E-05	IWX-EV4-SA
174	2.30E-11	.02	LOSS OF CCS/SWS	WITH RCS FILLED	INITIATING EVENT	OCCURS	3.99E-03	IEV-CCWND
			FAILURE OF PRHR	DUE TO COMMON	CAUSE OF AOVs		1.92E-04	PXX-AV-LA
			CCF OF ADS 4TH	STAGE SQUIB VALVES	TO OPEN		3.00E-05	ADX-EV-SA
175	2.30E-11	.02	LOSS OF CCS/SWS	WITH RCS FILLED	INITIATING EVENT	OCCURS	3.99E-03	IEV-CCWND
			FAILURE OF PRHR	DUE TO COMMON	CAUSE OF AOVs		1.92E-04	PXX-AV-LA
			CCF OF GRAVITY	INJECTION CHECK	VALVES TO OPEN		3.00E-05	IWX-CV-AO

Table 54-6 (Sheet 22 of 25)

AP1000 SHUTDOWN LEVEL 1 PRA TOP 200 CUTSETS

NUMBER	CUTSET PROB	PERCENT	BASIC EVENT NAME				EVENT PROB.	IDENTIFIER
176	2.29E-11	.02	LOSS OF OFFSITE	POWER INITIATING	EVENT OCCURS	WITH RCS DRAINED	5.28E-03	IEV-LOSPD
			FAILURE TO	RECOVER AC POWER	IN 1 HOUR		4.20E-01	OTH-R1
			COMMON CAUSE	FAILURE	4KV BREAKERS TO	OPEN	1.20E-03	ECX-CB-GO
			CCF OF THE POWER	INTERFACE OUTPUT	BOARDS IN PMS		8.62E-06	CCX-EP-SAM
177	2.24E-11	.02	LOSS OF OFFSITE	POWER INITIATING	EVENT OCCURS	WITH RCS DRAINED	5.28E-03	IEV-LOSPD
			OFFSITE	AC POWER	RECOVERED IN	1 HOUR	5.80E-01	SUC-R1S
			CCF TO OPEN	OF THE STOP	CHECK VALVES		6.10E-04	RNX-KV-GO
			CCF OF STRAINERS	IN IRWST TANK			1.20E-05	IWX-FL-GP
178	2.24E-11	.02	LOSS OF OFFSITE	POWER INITIATING	EVENT OCCURS	WITH RCS DRAINED	5.28E-03	IEV-LOSPD
			OFFSITE	AC POWER	RECOVERED IN	1 HOUR	5.80E-01	SUC-R1S
			CCF TO OPEN	OF THE STOP	CHECK VALVES		6.10E-04	RNX-KV-GO
			CCF OF IRWST RECIRC	SUMP STRAINERS	PLUGGING		1.20E-05	REX-FL-GP
179	2.22E-11	.02	LOSS OF OFFSITE	POWER INITIATING	EVENT OCCURS	WITH RCS DRAINED	5.28E-03	IEV-LOSPD
			FAILURE TO	RECOVER AC POWER	IN 1 HOUR		4.20E-01	OTH-R1
			PLS LOGIC GROUP	PROCESSING	FAILURE UPON	DEMAND	1.16E-03	PL50301ASA
			CCF OF THE POWER	INTERFACE OUTPUT	BOARDS IN PMS		8.62E-06	CCX-EP-SAM
180	2.22E-11	.02	LOSS OF OFFSITE	POWER INITIATING	EVENT OCCURS	WITH RCS DRAINED	5.28E-03	IEV-LOSPD
			FAILURE TO	RECOVER AC POWER	IN 1 HOUR		4.20E-01	OTH-R1
			PLS LOGIC GROUP	PROCESSING	FAILURE UPON	DEMAND	1.16E-03	PL50301BSA
			CCF OF THE POWER	INTERFACE OUTPUT	BOARDS IN PMS		8.62E-06	CCX-EP-SAM
181	2.19E-11	.02	LOSS OF OFFSITE	POWER INITIATING	EVENT OCCURS	WITH RCS DRAINED	5.28E-03	IEV-LOSPD
			FAILURE TO	RECOVER AC POWER	IN 1 HOUR		4.20E-01	OTH-R1
			PUMP SUBLOOP B	HARDWARE FAILURE	OR DIVERTED FLOW		1.04E-02	CCBMOD01S
			D/G FAILS TO	START & RUN OR	BKR 102 FAILS TO	CLOSE	2.02E-02	Z01MOD01
			COMMON CAUSE	FAILURE OF THE	BATTERIES	IDSA-DB-1A/1B	4.70E-05	CCX-BY-PN
182	2.18E-11	.02	LOSS OF CCS/SWS	WITH RCS DRAINED	INITIATING EVENT	OCCURS	7.16E-04	IEV-CCWD
			CCF OF LOGIC	GROUP PROCESSING			1.38E-05	CCX-PMA030X
			MECHANICAL	FAILURE CAUSES	MOV 023 TO	FAIL-TO-OPEN	2.21E-03	RN23MOD5S
183	2.17E-11	.02	LOSS OF OFFSITE	POWER INITIATING	EVENT OCCURS	WITH RCS DRAINED	5.28E-03	IEV-LOSPD
			FAILURE TO	RECOVER AC POWER	IN 1 HOUR		4.20E-01	OTH-R1
			BATTERY	DB1	UNAVAILABLE		2.70E-03	ED1MOD03
			CCF OF ORIFICES				3.63E-06	CCX-ORY-SPX

Table 54-6 (Sheet 23 of 25)

AP1000 SHUTDOWN LEVEL 1 PRA TOP 200 CUTSETS

NUMBER	CUTSET PROB	PERCENT	BASIC EVENT NAME				EVENT PROB.	IDENTIFIER
184	2.17E-11	.02	LOSS OF OFFSITE	POWER INITIATING	EVENT OCCURS	WITH RCS DRAINED	5.28E-03	IEV-LOSPD
			FAILURE TO	RECOVER AC POWER	IN 1 HOUR		4.20E-01	OTH-R1
			D/G FAILS TO	START & RUN OR	BKR 102 FAILS TO	CLOSE	2.02E-02	ZO1MOD01
			D/G FAILS TO	START & RUN OR	BKR 202 FAILS TO	CLOSE	2.02E-02	ZO2MOD01
			COMMON CAUSE	FAILURE OF THE	INVERTER		2.40E-05	CCX-IV-XR
185	2.15E-11	.02	LOSS OF OFFSITE	POWER INITIATING	EVENT OCCURS	WITH RCS DRAINED	5.28E-03	IEV-LOSPD
			OFFSITE	AC POWER	RECOVERED IN	1 HOUR	5.80E-01	SUC-R1S
			PUMP 01A FAILS;	STOP CK V007A,	CB & RELAY FTC;	CB ECS122 SPO	1.53E-02	RNAMOD06S
			PUMP 01B FAILS &	ST CK V007B & C	B FTC & RE FTC &	CB ECS221 SPO	1.53E-02	RNBMOD07S
			CCF OF ADS 4TH	STAGE SQUIB VALVES	TO OPEN		3.00E-05	ADX-EV-SA
186	2.11E-11	.02	LOSS OF OFFSITE	POWER INITIATING	EVENT OCCURS	WITH RCS DRAINED	5.28E-03	IEV-LOSPD
			FAILURE TO	RECOVER AC POWER	IN 1 HOUR		4.20E-01	OTH-R1
			FIXED	COMPONENTS	FAILURE		3.17E-04	ED1MOD113
			CCF OF ADS 4TH	STAGE SQUIB VALVES	TO OPEN		3.00E-05	ADX-EV-SA
187	2.11E-11	.02	LOSS OF OFFSITE	POWER INITIATING	EVENT OCCURS	WITH RCS DRAINED	5.28E-03	IEV-LOSPD
			FAILURE TO	RECOVER AC POWER	IN 1 HOUR		4.20E-01	OTH-R1
			FIXED	COMPONENTS	FAILURE		3.17E-04	ED1MOD11
			CCF OF ADS 4TH	STAGE SQUIB VALVES	TO OPEN		3.00E-05	ADX-EV-SA
188	2.11E-11	.02	LOSS OF OFFSITE	POWER INITIATING	EVENT OCCURS	WITH RCS DRAINED	5.28E-03	IEV-LOSPD
			FAILURE TO	RECOVER AC POWER	IN 1 HOUR		4.20E-01	OTH-R1
			FIXED	COMPONENTS	FAILURE		3.17E-04	ED1MOD13
			CCF OF ADS 4TH	STAGE SQUIB VALVES	TO OPEN		3.00E-05	ADX-EV-SA
189	2.06E-11	.02	LOSS OF OFFSITE	POWER INITIATING	EVENT OCCURS	WITH RCS DRAINED	5.28E-03	IEV-LOSPD
			FAILURE TO	RECOVER AC POWER	IN 1 HOUR		4.20E-01	OTH-R1
			PUMP 01B FAILS &	ST CK V007B & C	B FTC & RE FTC &	CB ECS221 SPO	1.53E-02	RNBMOD07S
			D/G FAILS TO	START & RUN OR	BKR 102 FAILS TO	CLOSE	2.02E-02	ZO1MOD01
			CCF OF ADS 4TH	STAGE SQUIB VALVES	TO OPEN		3.00E-05	ADX-EV-SA
190	2.06E-11	.02	LOSS OF OFFSITE	POWER INITIATING	EVENT OCCURS	WITH RCS DRAINED	5.28E-03	IEV-LOSPD
			FAILURE TO	RECOVER AC POWER	IN 1 HOUR		4.20E-01	OTH-R1
			PUMP 01A FAILS;	STOP CK V007A,	CB & RELAY FTC;	CB ECS122 SPO	1.53E-02	RNAMOD06S
			D/G FAILS TO	START & RUN OR	BKR 202 FAILS TO	CLOSE	2.02E-02	ZO2MOD01
			CCF OF ADS 4TH	STAGE SQUIB VALVES	TO OPEN		3.00E-05	ADX-EV-SA

Table 54-6 (Sheet 24 of 25)

AP1000 SHUTDOWN LEVEL 1 PRA TOP 200 CUTSETS

NUMBER	CUTSET PROB	PERCENT	BASIC EVENT NAME				EVENT PROB.	IDENTIFIER
191	2.05E-11	.02	LOSS OF OFFSITE	POWER INITIATING	EVENT OCCURS	WITH RCS DRAINED	5.28E-03	IEV-LOSPD
			FAILURE TO	RECOVER AC POWER	IN 1 HOUR		4.20E-01	OTH-R1
			CCF OF RNS PUMPS	P01A/B TO START			7.70E-04	RNX-PM-FS
			CCF OF IRWST RECIRC SUMP STRAINERS PLUGGING				1.20E-05	REX-FL-GP
192	2.05E-11	.02	LOSS OF OFFSITE	POWER INITIATING	EVENT OCCURS	WITH RCS DRAINED	5.28E-03	IEV-LOSPD
			FAILURE TO	RECOVER AC POWER	IN 1 HOUR		4.20E-01	OTH-R1
			CCF OF RNS PUMPS	P01A/B TO START			7.70E-04	RNX-PM-FS
			CCF OF STRAINERS	IN IRWST TANK			1.20E-05	IWX-FL-GP
193	2.05E-11	.02	LOSS OF OFFSITE	POWER INITIATING	EVENT OCCURS	WITH RCS DRAINED	5.28E-03	IEV-LOSPD
			FAILURE TO	RECOVER AC POWER	IN 1 HOUR		4.20E-01	OTH-R1
			CCF TO START	OF ENGINE-DRIVEN	FUEL PUMPS		2.00E-03	ZOX-PD-ES
			FAILURE OF	PMS OUTPUT	LOGIC I/Os		2.09E-03	PMAMOD11
			MECHANICAL	FAILURE CAUSES	MOV 023 TO	FAIL-TO-OPEN	2.21E-03	RN23MOD5S
194	2.03E-11	.02	LOSS OF OFFSITE	POWER INITIATING	EVENT OCCURS	WITH RCS DRAINED	5.28E-03	IEV-LOSPD
			FAILURE TO	RECOVER AC POWER	IN 1 HOUR		4.20E-01	OTH-R1
			EDS1 EA 1 DISTR.	PNL FAILURE OR	T&M		3.05E-04	ED1MOD07
			CCF OF ADS 4TH STAGE SQUIB VALVES	TO OPEN			3.00E-05	ADX-EV-SA
195	2.00E-11	.02	LOSS OF OFFSITE	POWER INITIATING	EVENT OCCURS	WITH RCS DRAINED	5.28E-03	IEV-LOSPD
			FAILURE TO	RECOVER AC POWER	IN 1 HOUR		4.20E-01	OTH-R1
			BATTERY	DB1	UNAVAILABLE		2.70E-03	ED1MOD03
			FAILURE OF	PMS OUTPUT	LOGIC I/Os		2.09E-03	PMAMOD11
			OPERATOR FAILS	TO RECOGNIZE	NEED AND TO OPEN	RNS MOV V023	1.60E-03	RHN-MAN05
196	2.00E-11	.02	LOSS OF OFFSITE	POWER INITIATING	EVENT OCCURS	WITH RCS DRAINED	5.28E-03	IEV-LOSPD
			FAILURE TO	RECOVER AC POWER	IN 1 HOUR		4.20E-01	OTH-R1
			PUMP MP 01B	SEGMENT HARDWARE	FAILURE OR	DIVERTED FLOW	2.44E-02	SWBMOD02
			BREAKER 100	FAILS TO OPEN		[#3,5]	1.23E-02	EC1CB100VO
			CCF OF ADS 4TH STAGE SQUIB VALVES	TO OPEN			3.00E-05	ADX-EV-SA
197	1.99E-11	.02	LOSS OF CCS/SWS	WITH RCS FILLED	INITIATING EVENT OCCURS		3.99E-03	IEV-CCWND
			FAILURE OF PRHR	DUE TO COMMON	CAUSE OF AOVs		1.92E-04	PXX-AV-LA
			CCF OF 2/2 IRWST LP SQUIB VALVES	TO OPEN			2.60E-05	IWX-EV4-SA

Table 54-6 (Sheet 25 of 25)

AP1000 SHUTDOWN LEVEL 1 PRA TOP 200 CUTSETS

NUMBER	CUTSET PROB	PERCENT	BASIC EVENT NAME				EVENT PROB.	IDENTIFIER
198	1.96E-11	.02	LOSS OF OFFSITE	POWER INITIATING	EVENT OCCURS	WITH RCS DRAINED	5.28E-03	IEV-LOSPD
			FAILURE TO	RECOVER AC POWER	IN 1 HOUR		4.20E-01	OTH-R1
			PUMP 01B FAILS &	ST CK V007B & C	B FTC & RE FTC &	CB ECS221 SPO	1.53E-02	RNBMOD07S
			BREAKER 100	FAILS TO OPEN		[#3,5]	1.23E-02	EC1CB100VO
			COMMON CAUSE	FAILURE OF THE	BATTERIES	IDSA-DB-1A/1B	4.70E-05	CCX-BY-PN
199	1.96E-11	.02	LOSS OF OFFSITE	POWER INITIATING	EVENT OCCURS	WITH RCS DRAINED	5.28E-03	IEV-LOSPD
			FAILURE TO	RECOVER AC POWER	IN 1 HOUR		4.20E-01	OTH-R1
			PUMP 01A FAILS;	STOP CK V007A,	CB & RELAY FTC;	CB ECS122 SPO	1.53E-02	RNAMOD06S
			BREAKER 200	FAILS TO OPEN		[#5,3]	1.23E-02	EC2CB200VO
			COMMON CAUSE	FAILURE OF THE	BATTERIES	IDSA-DB-1A/1B	4.70E-05	CCX-BY-PN
200	1.94E-11	.02	LOSS OF OFFSITE	POWER INITIATING	EVENT OCCURS	WITH RCS DRAINED	5.28E-03	IEV-LOSPD
			FAILURE TO	RECOVER AC POWER	IN 1 HOUR		4.20E-01	OTH-R1
			COMMON CAUSE	FAILURE	4KV BREAKER TO	CLOSE	7.30E-04	ECX-CB-GC
			CCF OF STRAINERS	IN IRWST TANK			1.20E-05	IWX-FL-GP
TOTAL:	1.18E-07	95.7%						

Table 54-7

BASIC EVENT PROBABILITIES REVISED IN CASE 1

	Component		Basic Event	Old Prob.	New Prob.
1	CCF of ADS-4 EVs	2	ADX-EV-SA	3.00E-05	3.80E-05
2	EV-118A	143	IRWMOD09	1.46E-03	1
3	EV-120A	144	IRWMOD10	1.46E-03	1
4	Screen Plug	151	IWA-PLUG	2.40E-04	1
5	CV-122A	152	IWACV122AO	8.76E-03	1
6	EV-123 A	153	IWACV123AO	8.76E-03	1
7	CV-124A	154	IWACV124AO	8.76E-03	1
8	EV-125A	155	IWACV125AO	8.76E-03	1
9	CCF IRWST CVs	167	IWX-CV-AO	3.00E-05	4.00E-05
10	CCF IRWST EVs	168	IWX-EV4-SA	2.60E-05	3.30E-05
11	Screen Plug	228	REA-PLUG	2.40E-04	1
12	CV-120A	229	REACV119GO	1.75E-03	1
13	MOV-RNS-23	243	RN23MOD5S	2.21E-03	1
	ADS-4 Line 1 EV		AD4MOD7	not in cutsets	
	ADS-4 Line 2 EV		AD4MOD8	not in cutsets	
	OK	157	IWB-PLUG	2.40E-04	
	OK	158	IWBCV122AO	8.76E-03	
	OK	159	IWBCV123AO	8.76E-03	
	OK	160	IWBCV124AO	8.76E-03	
	OK	161	IWBCV125AO	8.76E-03	

Basic Events Revised:
; SENDATA 1 1
; 03/13/03, 13:34:27

h:\ap1000~2\38-1\case-1\drained.wlk

Case 1
h:\ap1000~2\38-1\case-1\drained.wl1

ADX-EV-SA 3.8E-05
IWA-PLUG R
IWACV122AO R
IWACV123AO R
IWACV124AO R
IWACV125AO R
IWX-CV-AO 4.0e-05
RN23MOD5S R
IRWMOD09 R
IRWMOD10 R
IWX-EV4-SA 3.3e-05
REA-PLUG R
REACV119GO R

Table 54-8 (Sheet 1 of 2)

REVISED CCF BASIC EVENT PROBABILITIES

CCF calcs CCF basic event probabilities must be increased since some redundant components are out of service.

ADS 4th stage EVs. 1/4 needed for success; group size is 4; only 2 available.
Random Failure probability = 5.80E-04

	CCF Multiplier	Q	N # of Comb.	Q*N	Original Should have been # of Comb.	Q*N	Original used # of Comb.	Q*N
2/4	1.70E-02	9.860E-06	1	9.860E-06	0	0.000E+00	0	0.000E+00
3/4	1.70E-03	9.860E-07	2	1.972E-06	0	0.000E+00	4	3.944E-06
4/4	4.50E-02	2.610E-05	1	2.610E-05	1	2.610E-05	1	2.610E-05
Calc 1		**ADX-EV-SA**		**3.8E-05**		2.610E-05		**3.0E-05**

replace ADX-EV-SA with the new value but 3.0E-05 was used; was conservative

IRWST Check valves 1/4 needed for success; group size is 4; only two available
Random Failure Probability = 1.75E-03

		Q	N # of Comb.	Q*N	Original used # of Comb.	Q*N
2/4	3.10E-04	5.425E-07	1	5.425E-07	0	0.000E+00
3/4	2.80E-03	4.900E-06	2	9.800E-06	0	0.000E+00
4/4	1.70E-02	2.975E-05	1	2.975E-05	1	2.975E-05
Calc 2		**IWX-CV-AO**		**4.0E-05**		**3.0E-05**

replace IWX-CV-AO with the new value

Table 54-8 (Sheet 2 of 2)

REVISED CCF BASIC EVENT PROBABILITIES

IRWST EVs — 1/4 needed for success; group size is 6; three are out of service

Random Failure Probability = 5.80E-04

		Q	N # of Comb.	Q*N	Original used # of Comb.	Q*N
2/6	1.00E-02	5.800E-06	1	5.800E-06	0	0.000E+00
3/6	5.00E-04	2.900E-07	4	1.160E-06	0	0.000E+00
4/6	4.50E-02	2.610E-05	1	2.610E-05	1	2.610E-05
Calc 3		**IWX-EV4-SA**		**3.3E-05**		**2.6E-05**

replace IWX-EV4SA with the new value

Table 54-9

CONTRIBUTION OF INITIATING EVENTS TO PLANT CDF – SHUTDOWN SENSITIVITY CASE 1

Plant CDF from drained events = 1.95E-06

Total Plant CDF (drained + non-drained) = 2.19E-06

	Initiating Event	Percentage Contribution	IEV Frequency a	IEV CDF b	CDP b/a	
1	IEV-CCWD	69.2	7.16E-04	1.51E-06	2.11E-03	Drained events
2	IEV-RNSD	9.2	9.69E-05	2.01E-07	2.08E-03	Drained events
3	IEV-LOSPD	8.8	5.28E-03	1.93E-07	3.66E-05	Drained events
4	IEV-RCSOD	1.1	5.28E-06	2.49E-08	4.72E-03	Drained events
5	IEV-LOCA24D	0.9	1.15E-05	1.97E-08	1.71E-03	Drained events
	IEV-LOSPND	8.2	1.82E-02	1.79E-07	9.82E-06	Non-drained events
	IEV-CCWND	1.9	3.99E-03	4.09E-08	1.02E-05	Non-drained events
	IEV-RNSND	0.5	1.02E-03	1.04E-08	1.02E-05	Non-drained events
	IEV-LOCA24ND	0.1	1.73E-05	2.46E-09	1.42E-04	Non-drained events
	IEV-LOCAPRND	0.0	1.61E-05	2.84E-10	1.76E-05	Non-drained events

Note:
Non-drained cases are the same as the base case.

Table 54-10 (Sheet 1 of 5)

AP1000 SHUTDOWN PRA SENSITIVITY CASE 2 CDF CUTSETS

NUMBER	CUTSET PROB	PERCENT	BASIC EVENT NAME				EVENT PROB.	IDENTIFIER
1	1.19E-07	9.67	LOSS OF OFFSITE	POWER INITIATING	EVENT OCCURS	WITH RCS FILLED	1.82E-02	IEV-LOSPND
			OFFSITE	AC POWER	RECOVERED IN	2 HOURS	7.60E-01	SUC-R2S
			CCF OF THE POWER	INTERFACE OUTPUT	BOARDS IN PMS		8.62E-06	CCX-EP-SAM
2	1.04E-07	8.46	LOSS OF OFFSITE	POWER INITIATING	EVENT OCCURS	WITH RCS DRAINED	5.28E-03	IEV-LOSPD
			FAILURE TO	RECOVER AC POWER	IN 1 HOUR		4.20E-01	OTH-R1
			COMMON CAUSE	FAILURE OF THE	BATTERIES	IDSA-DB-1A/1B	4.70E-05	CCX-BY-PN
3	9.19E-08	7.47	LOSS OF OFFSITE	POWER INITIATING	EVENT OCCURS	WITH RCS DRAINED	5.28E-03	IEV-LOSPD
			OFFSITE	AC POWER	RECOVERED IN	1 HOUR	5.80E-01	SUC-R1S
			CCF OF ADS 4TH S	AGE SQUIB VALVES	TO OPEN		3.00E-05	ADX-EV-SA
4	7.96E-08	6.47	LOSS OF OFFSITE	POWER INITIATING	EVENT OCCURS	WITH RCS DRAINED	5.28E-03	IEV-LOSPD
			OFFSITE	AC POWER	RECOVERED IN	1 HOUR	5.80E-01	SUC-R1S
			IWX-MV-GO1				2.60E-05	IWX-MV-GO1
5	7.96E-08	6.47	LOSS OF OFFSITE	POWER INITIATING	EVENT OCCURS	WITH RCS DRAINED	5.28E-03	IEV-LOSPD
			OFFSITE	AC POWER	RECOVERED IN	1 HOUR	5.80E-01	SUC-R1S
			IWX-EV4-SA				2.60E-05	IWX-EV4-SA
6	6.65E-08	5.41	LOSS OF OFFSITE	POWER INITIATING	EVENT OCCURS	WITH RCS DRAINED	5.28E-03	IEV-LOSPD
			FAILURE TO	RECOVER AC POWER	IN 1 HOUR		4.20E-01	OTH-R1
			CCF OF ADS 4TH S	AGE SQUIB VALVES	TO OPEN		3.00E-05	ADX-EV-SA
7	5.77E-08	4.69	LOSS OF OFFSITE	POWER INITIATING	EVENT OCCURS	WITH RCS DRAINED	5.28E-03	IEV-LOSPD
			FAILURE TO	RECOVER AC POWER	IN 1 HOUR		4.20E-01	OTH-R1
			IWX-MV-GO1				2.60E-05	IWX-MV-GO1
8	5.77E-08	4.69	LOSS OF OFFSITE	POWER INITIATING	EVENT OCCURS	WITH RCS DRAINED	5.28E-03	IEV-LOSPD
			FAILURE TO	RECOVER AC POWER	IN 1 HOUR		4.20E-01	OTH-R1
			IWX-EV4-SA				2.60E-05	IWX-EV4-SA
9	5.32E-08	4.33	LOSS OF OFFSITE	POWER INITIATING	EVENT OCCURS	WITH RCS DRAINED	5.28E-03	IEV-LOSPD
			FAILURE TO	RECOVER AC POWER	IN 1 HOUR		4.20E-01	OTH-R1
			COMMON CAUSE	FAILURE OF THE	INVERTER		2.40E-05	CCX-IV-XR
10	3.77E-08	3.07	LOSS OF OFFSITE	POWER INITIATING	EVENT OCCURS	WITH RCS FILLED	1.82E-02	IEV-LOSPND
			FAILURE TO	RECOVER AC POWER	IN 2 HOURS		2.40E-01	OTH-R2
			CCF OF THE POWER	INTERFACE OUTPUT	BOARDS IN PMS		8.62E-06	CCX-EP-SAM

Table 54-10 (Sheet 2 of 5)

AP1000 SHUTDOWN PRA SENSITIVITY CASE 2 CDF CUTSETS

NUMBER	CUTSET PROB	PERCENT	BASIC EVENT NAME				EVENT PROB.	IDENTIFIER
11	3.67E-08	2.98	LOSS OF OFFSITE	POWER INITIATING	EVENT OCCURS	WITH RCS DRAINED	5.28E-03	IEV-LOSPD
			OFFSITE	AC POWER	RECOVERED IN	1 HOUR	5.80E-01	SUC-R1S
			CCF OF STRAINERS	IN IRWST TANK			1.20E-05	IWX-FL-GP
12	3.67E-08	2.98	LOSS OF OFFSITE	POWER INITIATING	EVENT OCCURS	WITH RCS DRAINED	5.28E-03	IEV-LOSPD
			OFFSITE	AC POWER	RECOVERED IN	1 HOUR	5.80E-01	SUC-R1S
			REX-FL-GP				1.20E-05	REX-FL-GP
13	3.44E-08	2.80	LOSS OF CCS/SWS	WITH RCS FILLED	INITIATING EVENT	OCCURS	3.99E-03	IEV-CCWND
			CCF OF THE POWER	INTERFACE OUTPUT	BOARDS IN PMS		8.62E-06	CCX-EP-SAM
14	2.66E-08	2.16	LOSS OF OFFSITE	POWER INITIATING	EVENT OCCURS	WITH RCS DRAINED	5.28E-03	IEV-LOSPD
			FAILURE TO	RECOVER AC POWER	IN 1 HOUR		4.20E-01	OTH-R1
			REX-FL-GP				1.20E-05	REX-FL-GP
15	2.66E-08	2.16	LOSS OF OFFSITE	POWER INITIATING	EVENT OCCURS	WITH RCS DRAINED	5.28E-03	IEV-LOSPD
			FAILURE TO	RECOVER AC POWER	IN 1 HOUR		4.20E-01	OTH-R1
			CCF OF STRAINERS	IN IRWST TANK			1.20E-05	IWX-FL-GP
16	2.64E-08	2.15	LOSS OF OFFSITE	POWER INITIATING	EVENT OCCURS	WITH RCS DRAINED	5.28E-03	IEV-LOSPD
			OFFSITE	AC POWER	RECOVERED IN	1 HOUR	5.80E-01	SUC-R1S
			CCF OF THE POWER	INTERFACE OUTPUT	BOARDS IN PMS		8.62E-06	CCX-EP-SAM
17	2.15E-08	1.75	LOSS OF CCS/SWS	WITH RCS DRAINED	INITIATING EVENT	OCCURS	7.16E-04	IEV-CCWD
			CCF OF ADS 4TH S	AGE SQUIB VALVES	TO OPEN		3.00E-05	ADX-EV-SA
18	1.91E-08	1.55	LOSS OF OFFSITE	POWER INITIATING	EVENT OCCURS	WITH RCS DRAINED	5.28E-03	IEV-LOSPD
			FAILURE TO	RECOVER AC POWER	IN 1 HOUR		4.20E-01	OTH-R1
			CCF OF THE POWER	INTERFACE OUTPUT	BOARDS IN PMS		8.62E-06	CCX-EP-SAM
19	1.86E-08	1.51	LOSS OF CCS/SWS	WITH RCS DRAINED	INITIATING EVENT	OCCURS	7.16E-04	IEV-CCWD
			IWX-MV-GO1				2.60E-05	IWX-MV-GO1
20	1.86E-08	1.51	LOSS OF CCS/SWS	WITH RCS DRAINED	INITIATING EVENT	OCCURS	7.16E-04	IEV-CCWD
			IWX-EV4-SA				2.60E-05	IWX-EV4-SA
21	1.66E-08	1.35	LOSS OF OFFSITE	POWER INITIATING	EVENT OCCURS	WITH RCS FILLED	1.82E-02	IEV-LOSPND
			OFFSITE	AC POWER	RECOVERED IN	2 HOURS	7.60E-01	SUC-R2S
			SOFTWARE CCF	OF ALL CARDS			1.20E-06	CCX-SFTW

Table 54-10 (Sheet 3 of 5)

AP1000 SHUTDOWN PRA SENSITIVITY CASE 2 CDF CUTSETS

NUMBER	CUTSET PROB	PERCENT	BASIC EVENT NAME				EVENT PROB.	IDENTIFIER
22	1.11E-08	.90	LOSS OF OFFSITE	POWER INITIATING	EVENT OCCURS	WITH RCS DRAINED	5.28E-03	IEV-LOSPD
			OFFSITE	AC POWER	RECOVERED IN	1 HOUR	5.80E-01	SUC-R1S
			CCF OF ORIFICES				3.63E-06	CCX-ORY-SPX
23	1.02E-08	.83	LOSS OF OFFSITE	POWER INITIATING	EVENT OCCURS	WITH RCS DRAINED	5.28E-03	IEV-LOSPD
			FAILURE TO	RECOVER AC POWER	IN 1 HOUR		4.20E-01	OTH-R1
			FAILURE OF	PMS OUTPUT	LOGIC I/Os		2.09E-03	PMAMOD11
			MECHANICAL	FAILURE CAUSES	MOV 023 TO	FAIL-TO-OPEN	2.21E-03	RN23MOD5S
24	8.79E-09	.71	LOSS OF RNS WITH	RCS FILLED	INITIATING EVENT	OCCURS	1.02E-03	IEV-RNSND
			CCF OF THE POWER	INTERFACE OUTPUT	BOARDS IN PMS		8.62E-06	CCX-EP-SAM
25	8.59E-09	.70	LOSS OF CCS/SWS	WITH RCS DRAINED	INITIATING EVENT	OCCURS	7.16E-04	IEV-CCWD
			CCF OF STRAINERS	IN IRWST TANK			1.20E-05	IWX-FL-GP
26	8.59E-09	.70	LOSS OF CCS/SWS	WITH RCS DRAINED	INITIATING EVENT	OCCURS	7.16E-04	IEV-CCWD
			REX-FL-GP				1.20E-05	REX-FL-GP
27	8.05E-09	.65	LOSS OF OFFSITE	POWER INITIATING	EVENT OCCURS	WITH RCS DRAINED	5.28E-03	IEV-LOSPD
			OFFSITE	AC POWER	RECOVERED IN	1 HOUR	5.80E-01	SUC-R1S
			CCF OF PRESSURE	TRANSMITTERS			2.63E-06	CCX-XMTRX
28	8.05E-09	.65	LOSS OF OFFSITE	POWER INITIATING	EVENT OCCURS	WITH RCS DRAINED	5.28E-03	IEV-LOSPD
			FAILURE TO	RECOVER AC POWER	IN 1 HOUR		4.20E-01	OTH-R1
			CCF OF ORIFICES				3.63E-06	CCX-ORY-SPX
29	7.42E-09	.60	LOSS OF OFFSITE	POWER INITIATING	EVENT OCCURS	WITH RCS DRAINED	5.28E-03	IEV-LOSPD
			FAILURE TO	RECOVER AC POWER	IN 1 HOUR		4.20E-01	OTH-R1
			FAILURE OF	PMS OUTPUT	LOGIC I/Os		2.09E-03	PMAMOD11
			OPERATOR FAILS	TO RECOGNIZE	NEED AND TO OPEN	RNS MOV V023	1.60E-03	RHN-MAN05
30	6.17E-09	.50	LOSS OF CCS/SWS	WITH RCS DRAINED	INITIATING EVENT	OCCURS	7.16E-04	IEV-CCWD
			CCF OF THE POWER	INTERFACE OUTPUT	BOARDS IN PMS		8.62E-06	CCX-EP-SAM
31	6.16E-09	.50	LOSS OF OFFSITE	POWER INITIATING	EVENT OCCURS	WITH RCS DRAINED	5.28E-03	IEV-LOSPD
			OFFSITE	AC POWER	RECOVERED IN	1 HOUR	5.80E-01	SUC-R1S
			IWX-XMTR				2.01E-04	IWX-XMTR
			REN-MAN04				1.00E-02	REN-MAN04

Table 54-10 (Sheet 4 of 5)

AP1000 SHUTDOWN PRA SENSITIVITY CASE 2 CDF CUTSETS

NUMBER	CUTSET PROB	PERCENT	BASIC EVENT NAME				EVENT PROB.	IDENTIFIER
32	5.83E-09	.47	LOSS OF OFFSITE	POWER INITIATING	EVENT OCCURS	WITH RCS DRAINED	5.28E-03	IEV-LOSPD
			FAILURE TO	RECOVER AC POWER	IN 1 HOUR		4.20E-01	OTH-R1
			CCF OF PRESSURE	TRANSMITTERS			2.63E-06	CCX-XMTRX
33	5.69E-09	.46	LOSS OF OFFSITE	POWER INITIATING	EVENT OCCURS	WITH RCS DRAINED	5.28E-03	IEV-LOSPD
			FAILURE TO	RECOVER AC POWER	IN 1 HOUR		4.20E-01	OTH-R1
			FAILURE UPON	DEMAND OF LOGIC	GROUP PROCESSING		1.16E-03	PMA0301ASA
			MECHANICAL	FAILURE CAUSES	MOV 023 TO	FAIL-TO-OPEN	2.21E-03	RN23MOD5S
34	5.69E-09	.46	LOSS OF OFFSITE	POWER INITIATING	EVENT OCCURS	WITH RCS DRAINED	5.28E-03	IEV-LOSPD
			FAILURE TO	RECOVER AC POWER	IN 1 HOUR		4.20E-01	OTH-R1
			FAILURE UPON	DEMAND OF LOGIC	GROUP PROCESSING		1.16E-03	PMA0301BSA
			MECHANICAL	FAILURE CAUSES	MOV 023 TO	FAIL-TO-OPEN	2.21E-03	RN23MOD5S
35	5.24E-09	.43	LOSS OF OFFSITE	POWER INITIATING	EVENT OCCURS	WITH RCS FILLED	1.82E-02	IEV-LOSPND
			FAILURE TO	RECOVER AC POWER	IN 2 HOURS		2.40E-01	OTH-R2
			SOFTWARE CCF	OF ALL CARDS			1.20E-06	CCX-SFTW
36	4.79E-09	.39	LOSS OF CCS/SWS	WITH RCS FILLED	INITIATING EVENT	OCCURS	3.99E-03	IEV-CCWND
			SOFTWARE CCF	OF ALL CARDS			1.20E-06	CCX-SFTW
37	4.46E-09	.36	LOSS OF OFFSITE	POWER INITIATING	EVENT OCCURS	WITH RCS DRAINED	5.28E-03	IEV-LOSPD
			FAILURE TO	RECOVER AC POWER	IN 1 HOUR		4.20E-01	OTH-R1
			IWX-XMTR				2.01E-04	IWX-XMTR
			REN-MAN04				1.00E-02	REN-MAN04
38	4.12E-09	.33	LOSS OF OFFSITE	POWER INITIATING	EVENT OCCURS	WITH RCS DRAINED	5.28E-03	IEV-LOSPD
			FAILURE TO	RECOVER AC POWER	IN 1 HOUR		4.20E-01	OTH-R1
			FAILURE UPON	DEMAND OF LOGIC	GROUP PROCESSING		1.16E-03	PMA0301ASA
			OPERATOR FAILS	TO RECOGNIZE	NEED AND TO OPEN	RNS MOV V023	1.60E-03	RHN-MAN05
39	4.12E-09	.33	LOSS OF OFFSITE	POWER INITIATING	EVENT OCCURS	WITH RCS DRAINED	5.28E-03	IEV-LOSPD
			FAILURE TO	RECOVER AC POWER	IN 1 HOUR		4.20E-01	OTH-R1
			FAILURE UPON	DEMAND OF LOGIC	GROUP PROCESSING		1.16E-03	PMA0301BSA
			OPERATOR FAILS	TO RECOGNIZE	NEED AND TO OPEN	RNS MOV V023	1.60E-03	RHN-MAN05
40	3.67E-09	.30	LOSS OF OFFSITE	POWER INITIATING	EVENT OCCURS	WITH RCS DRAINED	5.28E-03	IEV-LOSPD
			OFFSITE	AC POWER	RECOVERED IN	1 HOUR	5.80E-01	SUC-R1S
			SOFTWARE CCF	OF ALL CARDS			1.20E-06	CCX-SFTW

Table 54-10 (Sheet 5 of 5)

AP1000 SHUTDOWN PRA SENSITIVITY CASE 2 CDF CUTSETS

NUMBER	CUTSET PROB	PERCENT	BASIC EVENT NAME				EVENT PROB.	IDENTIFIER
41	2.91E-09	.24	LOSS OF RNS WITH	RCS DRAINED	INITIATING EVENT	OCCURS	9.69E-05	IEV-RNSD
			CCF OF ADS 4TH S	AGE SQUIB VALVES	TO OPEN		3.00E-05	ADX-EV-SA
42	2.66E-09	.22	LOSS OF OFFSITE	POWER INITIATING	EVENT OCCURS	WITH RCS DRAINED	5.28E-03	IEV-LOSPD
			FAILURE TO	RECOVER AC POWER	IN 1 HOUR		4.20E-01	OTH-R1
			SOFTWARE CCF	OF ALL CARDS			1.20E-06	CCX-SFTW
43	2.60E-09	.21	LOSS OF CCS/SWS	WITH RCS DRAINED	INITIATING EVENT	OCCURS	7.16E-04	IEV-CCWD
			CCF OF ORIFICES				3.63E-06	CCX-ORY-SPX
44	2.53E-09	.21	LOSS OF OFFSITE	POWER INITIATING	EVENT OCCURS	WITH RCS DRAINED	5.28E-03	IEV-LOSPD
			FAILURE TO	RECOVER AC POWER	IN 1 HOUR		4.20E-01	OTH-R1
			FAILURE OF INV.,	STATIC SWITCH	AND ASSOC.	BREAKERS	5.16E-04	IDAMOD05
			MECHANICAL	FAILURE CAUSES	MOV 023 TO	FAIL-TO-OPEN	2.21E-03	RN23MOD5S
45	2.52E-09	.20	LOSS OF RNS WITH	RCS DRAINED	INITIATING EVENT	OCCURS	9.69E-05	IEV-RNSD
			IWX-MV-G01				2.60E-05	IWX-MV-G01
46	2.52E-09	.20	LOSS OF RNS WITH	RCS DRAINED	INITIATING EVENT	OCCURS	9.69E-05	IEV-RNSD
			IWX-EV4-SA				2.60E-05	IWX-EV4-SA
47	2.20E-09	.18	LOSS OF OFFSITE	POWER INITIATING	EVENT OCCURS	WITH RCS DRAINED	5.28E-03	IEV-LOSPD
			OFFSITE	AC POWER	RECOVERED IN	1 HOUR	5.80E-01	SUC-R1S
			MECHANICAL	FAILURE CAUSES	MOV 121A TO	FAIL-TO-OPEN	3.00E-03	IRWMOD05S
			IRWST DISCHARGE	LINE "B"	STRAINER	PLUGGED	2.40E-04	IWB-PLUG
48	2.18E-09	.18	OVERDRAINING OF	RCS DURING DRAIN	DOWN TO MID-LOOP	INITIATING EVENT	5.28E-06	IEV-RCSOD
			OPERATOR FAILS	TO ISOLATE	RNS PIPE RUPTURE		5.50E-02	RHN-MAN04
			COND. PROB. OF	IWN-MAN00 (OP. F	ILS TO ACTUATE I	WST INJ)	5.00E-02	IWN-MAN00C
			COND. PROB. OF	RHN-MAN05 (OP.	FAILS TO OPEN	RNS MOV V023)	1.50E-01	RHN-MAN05C
49	1.88E-09	.15	LOSS OF CCS/SWS	WITH RCS DRAINED	INITIATING EVENT	OCCURS	7.16E-04	IEV-CCWD
			CCF OF PRESSURE	TRANSMITTERS			2.63E-06	CCX-XMTRX
50	1.83E-09	.15	LOSS OF OFFSITE	POWER INITIATING	EVENT OCCURS	WITH RCS DRAINED	5.28E-03	IEV-LOSPD
			FAILURE TO	RECOVER AC POWER	IN 1 HOUR		4.20E-01	OTH-R1
			FAILURE OF INV.,	STATIC SWITCH	AND ASSOC.	BREAKERS	5.16E-04	IDAMOD05
			OPERATOR FAILS	TO RECOGNIZE	NEED AND TO OPEN	RNS MOV V023	1.60E-03	RHN-MAN05

Table 54-11

LIST OF BASIC EVENTS "DROPPED" TO MAKE THE SENSITIVITY CASE 2

; SENDATA 1 1
; 04/09/03, 12:46:39

h:\ap1000~2\38-1\case-2r1\cmtot.wlk

Case 1
h:\ap1000~2\38-1\case-2r1\cmtot.wl1

DG1-LOGIC R
MDAS R
REC-MANDAS R
REC-MANDASC R
RHN-MAN03 R
RNAEPRNPSA R
RNAMOD06S R
RNBEPRNPSA R
RNBMOD07S R
RNX-CV-GO R
RNX-KV-GO R
RNX-PM-ER R
RNX-PM-FS R
ZO1DG001TM R
ZO1MOD01 R
ZO1MOD03 R
ZO1MOD04 R
ZO2DG002TM R
ZO2MOD01 R
ZO2MOD03 R
ZO2MOD04 R
ZOX-BL-ER R
ZOX-BL-ES R
ZOX-DG-DR R
ZOX-DG-DS R
ZOX-FL-GP R
ZOX-PD-ER R
ZOX-PD-ES R
DAS R
ZON-MAN01 R

Table 54-12

CONTRIBUTION OF INITIATING EVENTS TO PLANT CDF – SHUTDOWN SENSITIVITY CASE 2

Plant CDF =			1.23E-06			
Number of Initiating Events =			10			
	Initiating Event	Percentage Contribution	IEV Frequency a	IEV CDF b	CDP b/a	
1	IEV-LOSPD	72.31	5.28E-03	8.89E-07	1.68E-04	drained
2	IEV-LOSPND	14.53	1.82E-02	1.79E-07	9.82E-06	
3	IEV-CCWD	7.35	7.16E-04	9.04E-08	1.26E-04	drained
4	IEV-CCWND	3.32	3.99E-03	4.09E-08	1.02E-05	
5	IEV-RNSD	0.99	9.69E-05	1.22E-08	1.26E-04	drained
6	IEV-RNSND	0.85	1.02E-03	1.04E-08	1.02E-05	
7	IEV-RCSOD	0.31	5.28E-06	3.79E-09	7.19E-04	drained
8	IEV-LOCA24ND	0.2	1.73E-05	2.46E-09	1.42E-04	
9	IEV-LOCA24D	0.12	1.15E-05	1.45E-09	1.26E-04	drained
10	IEV-LOCAPRND	0.02	1.61E-05	2.84E-10	1.76E-05	
	Sum =	100	2.94E-02	1.23E-06	4.19E-05	

Table 54-13 (Sheet 1 of 28)

SHUTDOWN PRA SENSITIVITY CASE 3

NUMBER	CUTSET PROB	PERCENTAGE	BASIC EVENT NAME	EVENT PROB.	IDENTIFIER
1	2.66E-05	48.08	OVERDRAINING OF RCS DURING DRAIN DOWN TO MID-LOOP INITIATING EV	2.13E-04	IEV-RCSOD
			RHN-MAN04-SUCC	5.00E-01	RHN-MAN04-SUCC
			OPERATOR FAILS TO ACTUATE IRWST INJECTION	5.00E-01	IWN-MAN00
			COND. PROB. OF RHN-MAN05 (OP. FAILS TO OPEN RNS MOV V023)	5.00E-01	RHN-MAN05C
2	2.66E-05	48.08	OVERDRAINING OF RCS DURING DRAIN DOWN TO MID-LOOP INITIATING EV	2.13E-04	IEV-RCSOD
			OPERATOR FAILS TO ISOLATE RNS PIPE RUPTURE	5.00E-01	RHN-MAN04
			COND. PROB. OF IWN-MAN00 (OP. FAILS TO ACTUATE IRWST INJ)	5.00E-01	IWN-MAN00C
			COND. PROB. OF RHN-MAN05 (OP. FAILS TO OPEN RNS MOV V023)	5.00E-01	RHN-MAN05C
3	2.80E-07	0.51	LOSS OF CCS/SWS WITH RCS FILLED INITIATING EVENT OCCURS	3.99E-03	IEV-CCWND
			COND. PROB. OF REC-MANDAS (FAILURE OF MANUAL DAS ACTUATI	5.06E-01	REC-MANDASC
			CCF OF ORIFICES	2.77E-04	CCX-ORY-SP
			OPERATOR FAILS TO RECOGNIZE THE NEED FOR RCS DEPRESSURIZAT	5.00E-01	LPM-MAN05
4	2.03E-07	0.37	LOSS OF CCS/SWS WITH RCS FILLED INITIATING EVENT OCCURS	3.99E-03	IEV-CCWND
			COND. PROB. OF REC-MANDAS (FAILURE OF MANUAL DAS ACTUATI	5.06E-01	REC-MANDASC
			CCF OF PRESSURE TRANSMITTERS	2.01E-04	CCX-XMTR195
			OPERATOR FAILS TO RECOGNIZE THE NEED FOR RCS DEPRESSURIZAT	5.00E-01	LPM-MAN05
5	1.40E-07	0.25	LOSS OF CCS/SWS WITH RCS FILLED INITIATING EVENT OCCURS	3.99E-03	IEV-CCWND
			COND. PROB. OF REC-MANDAS (FAILURE OF MANUAL DAS ACTUATI	5.06E-01	REC-MANDASC
			CCF OF ORIFICES	2.77E-04	CCX-ORY-SP
			PRN-MAN01	5.00E-01	PRN-MAN01
			OPERATOR FAILS TO ACTUATE ADS BEFORE CORE DAMAGE	5.00E-01	AND-MAN01
6	1.18E-07	0.21	OVERDRAINING OF RCS DURING DRAIN DOWN TO MID-LOOP INITIATING EV	2.13E-04	IEV-RCSOD
			RHN-MAN04-SUCC	5.00E-01	RHN-MAN04-SUCC
			OPERATOR FAILS TO ACTUATE IRWST INJECTION	5.00E-01	IWN-MAN00
			MECHANICAL FAILURE CAUSES MOV 023 TO FAIL-TO-OPEN	2.21E-03	RN23MOD5S
7	1.18E-07	0.21	OVERDRAINING OF RCS DURING DRAIN DOWN TO MID-LOOP INITIATING EV	2.13E-04	IEV-RCSOD
			OPERATOR FAILS TO ISOLATE RNS PIPE RUPTURE	5.00E-01	RHN-MAN04
			COND. PROB. OF IWN-MAN00 (OP. FAILS TO ACTUATE IRWST INJ)	5.00E-01	IWN-MAN00C
			MECHANICAL FAILURE CAUSES MOV 023 TO FAIL-TO-OPEN	2.21E-03	RN23MOD5S

Table 54-13 (Sheet 2 of 28)

SHUTDOWN PRA SENSITIVITY CASE 3

NUMBER	CUTSET PROB	PERCENTAGE	BASIC EVENT NAME	EVENT PROB.	IDENTIFIER
8	1.04E-07	0.19	LOSS OF CCS/SWS WITH RCS FILLED INITIATING EVENT OCCURS	3.99E-03	IEV-CCWND
			COND. PROB. OF REC-MANDAS (FAILURE OF MANUAL DAS ACTUATI	5.06E-01	REC-MANDASC
			COMMON MODE FAILURE OF INPUT LOGIC GROUPS	1.03E-04	CCX-INPUT-LOGIC
			OPERATOR FAILS TO RECOGNIZE THE NEED FOR RCS DEPRESSURIZAT	5.00E-01	LPM-MAN05
9	1.01E-07	0.18	LOSS OF CCS/SWS WITH RCS FILLED INITIATING EVENT OCCURS	3.99E-03	IEV-CCWND
			COND. PROB. OF REC-MANDAS (FAILURE OF MANUAL DAS ACTUATI	5.06E-01	REC-MANDASC
			CCF OF PRESSURE TRANSMITTERS	2.01E-04	CCX-XMTR195
			PRN-MAN01	5.00E-01	PRN-MAN01
			OPERATOR FAILS TO ACTUATE ADS BEFORE CORE DAMAGE	5.00E-01	AND-MAN01
10	7.20E-08	0.13	LOSS OF CCS/SWS WITH RCS DRAINED INITIATING EVENT OCCURS	7.16E-04	IEV-CCWD
			IWX-XMTR	2.01E-04	IWX-XMTR
			REN-MAN04	5.00E-01	REN-MAN04
11	7.15E-08	0.13	LOSS OF RNS WITH RCS FILLED INITIATING EVENT OCCURS	1.02E-03	IEV-RNSND
			COND. PROB. OF REC-MANDAS (FAILURE OF MANUAL DAS ACTUATI	5.06E-01	REC-MANDASC
			CCF OF ORIFICES	2.77E-04	CCX-ORY-SP
			OPERATOR FAILS TO RECOGNIZE THE NEED FOR RCS DEPRESSURIZAT	5.00E-01	LPM-MAN05
12	5.19E-08	0.09	LOSS OF RNS WITH RCS FILLED INITIATING EVENT OCCURS	1.02E-03	IEV-RNSND
			COND. PROB. OF REC-MANDAS (FAILURE OF MANUAL DAS ACTUATI	5.06E-01	REC-MANDASC
			CCF OF PRESSURE TRANSMITTERS	2.01E-04	CCX-XMTR195
			OPERATOR FAILS TO RECOGNIZE THE NEED FOR RCS DEPRESSURIZAT	5.00E-01	LPM-MAN05
13	2.66E-08	0.05	LOSS OF RNS WITH RCS FILLED INITIATING EVENT OCCURS	1.02E-03	IEV-RNSND
			COND. PROB. OF REC-MANDAS (FAILURE OF MANUAL DAS ACTUATI	5.06E-01	REC-MANDASC
			COMMON MODE FAILURE OF INPUT LOGIC GROUPS	1.03E-04	CCX-INPUT-LOGIC
			OPERATOR FAILS TO RECOGNIZE THE NEED FOR RCS DEPRESSURIZAT	5.00E-01	LPM-MAN05
14	2.15E-08	0.04	LOSS OF CCS/SWS WITH RCS DRAINED INITIATING EVENT OCCURS	7.16E-04	IEV-CCWD
			CCF OF ADS 4TH STAGE SQUIB VALVES TO OPEN	3.00E-05	ADX-EV-SA
15	1.87E-08	0.03	LOSS OF CCS/SWS WITH RCS DRAINED INITIATING EVENT OCCURS	7.16E-04	IEV-CCWD
			COND. PROB. OF REC-MANDAS (FAILURE OF MANUAL DAS ACTUATI	5.06E-01	REC-MANDASC
			COMMON MODE FAILURE OF INPUT LOGIC GROUPS	1.03E-04	CCX-INPUT-LOGIC
			OPERATOR FAILS TO ACTUATE ADS BEFORE CORE DAMAGE	5.00E-01	AND-MAN01

Table 54-13 (Sheet 3 of 28)

SHUTDOWN PRA SENSITIVITY CASE 3

NUMBER	CUTSET PROB	PERCENTAGE	BASIC EVENT NAME	EVENT PROB.	IDENTIFIER
16	1.86E-08	0.03	LOSS OF CCS/SWS WITH RCS DRAINED INITIATING EVENT OCCURS	7.16E-04	IEV-CCWD
			IWX-MV-GO1	2.60E-05	IWX-MV-GO1
17	1.86E-08	0.03	LOSS OF CCS/SWS WITH RCS DRAINED INITIATING EVENT OCCURS	7.16E-04	IEV-CCWD
			IWX-EV4-SA	2.60E-05	IWX-EV4-SA
18	1.72E-08	0.03	LOSS OF CCS/SWS WITH RCS FILLED INITIATING EVENT OCCURS	3.99E-03	IEV-CCWND
			FAILURE OF MANUAL DAS ACTUATION	5.00E-01	REC-MANDAS
			CCF OF THE POWER INTERFACE OUTPUT BOARDS IN PMS	8.62E-06	CCX-EP-SAM
19	1.71E-08	0.03	LOSS OF CCS/SWS WITH RCS DRAINED INITIATING EVENT OCCURS	7.16E-04	IEV-CCWD
			COND. PROB. OF REC-MANDAS (FAILURE OF MANUAL DAS ACTUATI	5.06E-01	REC-MANDASC
			ORIFICE FAILURE DUE TO PLUGGING	9.46E-05	IW1OR170SPX
			OPERATOR FAILS TO ACTUATE ADS BEFORE CORE DAMAGE	5.00E-01	ADN-MAN01
20	1.71E-08	0.03	LOSS OF CCS/SWS WITH RCS DRAINED INITIATING EVENT OCCURS	7.16E-04	IEV-CCWD
			COND. PROB. OF REC-MANDAS (FAILURE OF MANUAL DAS ACTUATI	5.06E-01	REC-MANDASC
			ORIFICE FAILURE DUE TO PLUGGING	9.46E-05	IW2OR160SPX
			OPERATOR FAILS TO ACTUATE ADS BEFORE CORE DAMAGE	5.00E-01	ADN-MAN01
21	1.69E-08	0.03	LOSS OF CCS/SWS WITH RCS DRAINED INITIATING EVENT OCCURS	7.16E-04	IEV-CCWD
			ORIFICE FAILURE DUE TO PLUGGING	9.46E-05	IW2OR160SPX
			OPERATOR FAILS TO ACTUATE IRWST INJECTION	5.00E-01	IWN-MAN00
			COND. PROB. OF RHN-MAN05 (OP. FAILS TO OPEN RNS MOV V023)	5.00E-01	RHN-MAN05C
22	1.69E-08	0.03	LOSS OF CCS/SWS WITH RCS DRAINED INITIATING EVENT OCCURS	7.16E-04	IEV-CCWD
			ORIFICE FAILURE DUE TO PLUGGING	9.46E-05	IW1OR170SPX
			OPERATOR FAILS TO ACTUATE IRWST INJECTION	5.00E-01	IWN-MAN00
			COND. PROB. OF RHN-MAN05 (OP. FAILS TO OPEN RNS MOV V023)	5.00E-01	RHN-MAN05C
23	1.66E-08	0.03	LOSS OF CCS/SWS WITH RCS DRAINED INITIATING EVENT OCCURS	7.16E-04	IEV-CCWD
			CCF OF ACTUATION LOGIC GROUPS	4.63E-05	CCX-PMAMOD1X
			OPERATOR FAILS TO RECOGNIZE NEED AND TO OPEN RNS MOV V023	5.00E-01	RHN-MAN05
24	1.60E-08	0.03	OVERDRAINING OF RCS DURING DRAIN DOWN TO MID-LOOP INITIATING EV	2.13E-04	IEV-RCSOD
			RHN-MAN04-SUCC	5.00E-01	RHN-MAN04-SUCC
			OPERATOR FAILS TO ACTUATE IRWST INJECTION	5.00E-01	IWN-MAN00
			BUS UNAVAILABLE DUE TO TEST OR CORRECTIVE MAINTENANCE	3.00E-04	IDDBSDD1TM

Table 54-13 (Sheet 4 of 28)

SHUTDOWN PRA SENSITIVITY CASE 3

NUMBER	CUTSET PROB	PERCENTAGE	BASIC EVENT NAME	EVENT PROB.	IDENTIFIER
25	1.60E-08	0.03	OVERDRAINING OF RCS DURING DRAIN DOWN TO MID-LOOP INITIATING EV	2.13E-04	IEV-RCSOD
			OPERATOR FAILS TO ISOLATE RNS PIPE RUPTURE	5.00E-01	RHN-MAN04
			COND. PROB. OF IWN-MAN00 (OP. FAILS TO ACTUATE IRWST INJ)	5.00E-01	IWN-MAN00C
			BUS UNAVAILABLE DUE TO TEST OR CORRECTIVE MAINTENANCE	3.00E-04	IDDBSDS1TM
26	1.60E-08	0.03	OVERDRAINING OF RCS DURING DRAIN DOWN TO MID-LOOP INITIATING EV	2.13E-04	IEV-RCSOD
			OPERATOR FAILS TO ISOLATE RNS PIPE RUPTURE	5.00E-01	RHN-MAN04
			COND. PROB. OF IWN-MAN00 (OP. FAILS TO ACTUATE IRWST INJ)	5.00E-01	IWN-MAN00C
			BUS UNAVAILABLE DUE TO TEST OR CORRECTIVE MAINTENANCE	3.00E-04	IDDBSDK1TM
27	1.60E-08	0.03	OVERDRAINING OF RCS DURING DRAIN DOWN TO MID-LOOP INITIATING EV	2.13E-04	IEV-RCSOD
			RHN-MAN04-SUCC	5.00E-01	RHN-MAN04-SUCC
			OPERATOR FAILS TO ACTUATE IRWST INJECTION	5.00E-01	IWN-MAN00
			BUS UNAVAILABLE DUE TO TEST OR CORRECTIVE MAINTENANCE	3.00E-04	IDDBSDK1TM
28	1.60E-08	0.03	OVERDRAINING OF RCS DURING DRAIN DOWN TO MID-LOOP INITIATING EV	2.13E-04	IEV-RCSOD
			OPERATOR FAILS TO ISOLATE RNS PIPE RUPTURE	5.00E-01	RHN-MAN04
			COND. PROB. OF IWN-MAN00 (OP. FAILS TO ACTUATE IRWST INJ)	5.00E-01	IWN-MAN00C
			BUS UNAVAILABLE DUE TO TEST OR CORRECTIVE MAINTENANCE	3.00E-04	IDDBSDD1TM
29	1.60E-08	0.03	OVERDRAINING OF RCS DURING DRAIN DOWN TO MID-LOOP INITIATING EV	2.13E-04	IEV-RCSOD
			RHN-MAN04-SUCC	5.00E-01	RHN-MAN04-SUCC
			OPERATOR FAILS TO ACTUATE IRWST INJECTION	5.00E-01	IWN-MAN00
			BUS UNAVAILABLE DUE TO TEST OR CORRECTIVE MAINTENANCE	3.00E-04	IDDBSDS1TM
30	1.54E-08	0.03	LOSS OF CCS/SWS WITH RCS DRAINED INITIATING EVENT OCCURS	7.16E-04	IEV-CCWD
			CCF OF ACTUATION LOGIC GROUPS	8.58E-05	CCX-PMAMOD2X
			OPERATOR FAILS TO ACTUATE IRWST INJECTION	5.00E-01	IWN-MAN00
			COND. PROB. OF RHN-MAN05 (OP. FAILS TO OPEN RNS MOV V023)	5.00E-01	RHN-MAN05C
31	1.28E-08	0.02	OVERDRAINING OF RCS DURING DRAIN DOWN TO MID-LOOP INITIATING EV	2.13E-04	IEV-RCSOD
			RHN-MAN04-SUCC	5.00E-01	RHN-MAN04-SUCC
			OPERATOR FAILS TO ACTUATE IRWST INJECTION	5.00E-01	IWN-MAN00
			IRWST DISCHARGE LINE "B" STRAINER PLUGGED	2.40E-04	IWB-PLUG

Table 54-13 (Sheet 5 of 28)

SHUTDOWN PRA SENSITIVITY CASE 3

NUMBER	CUTSET PROB	PERCENTAGE	BASIC EVENT NAME	EVENT PROB.	IDENTIFIER
32	1.28E-08	0.02	OVERDRAINING OF RCS DURING DRAIN DOWN TO MID-LOOP INITIATING EV	2.13E-04	IEV-RCSOD
			OPERATOR FAILS TO ISOLATE RNS PIPE RUPTURE	5.00E-01	RHN-MAN04
			COND. PROB. OF IWN-MAN00 (OP. FAILS TO ACTUATE IRWST INJ)	5.00E-01	IWN-MAN00C
			IRWST DISCHARGE LINE "B" STRAINER PLUGGED	2.40E-04	IWB-PLUG
33	1.24E-08	0.02	LOSS OF CCS/SWS WITH RCS DRAINED INITIATING EVENT OCCURS	7.16E-04	IEV-CCWD
			COND. PROB. OF REC-MANDAS (FAILURE OF MANUAL DAS ACTUATI	5.06E-01	REC-MANDASC
			LEVEL TRANSMITTER FAILURE	6.84E-05	IW2TL160UFX
			OPERATOR FAILS TO ACTUATE ADS BEFORE CORE DAMAGE	5.00E-01	AND-MAN01
34	1.24E-08	0.02	LOSS OF CCS/SWS WITH RCS DRAINED INITIATING EVENT OCCURS	7.16E-04	IEV-CCWD
			COND. PROB. OF REC-MANDAS (FAILURE OF MANUAL DAS ACTUATI	5.06E-01	REC-MANDASC
			LEVEL TRANSMITTER FAILURE	6.84E-05	IW1TL170UFX
			OPERATOR FAILS TO ACTUATE ADS BEFORE CORE DAMAGE	5.00E-01	AND-MAN01
35	1.22E-08	0.02	LOSS OF CCS/SWS WITH RCS DRAINED INITIATING EVENT OCCURS	7.16E-04	IEV-CCWD
			LEVEL TRANSMITTER FAILURE	6.84E-05	IW2TL160UFX
			OPERATOR FAILS TO ACTUATE IRWST INJECTION	5.00E-01	IWN-MAN00
			COND. PROB. OF RHN-MAN05 (OP. FAILS TO OPEN RNS MOV V023)	5.00E-01	RHN-MAN05C
36	1.22E-08	0.02	LOSS OF CCS/SWS WITH RCS DRAINED INITIATING EVENT OCCURS	7.16E-04	IEV-CCWD
			LEVEL TRANSMITTER FAILURE	6.84E-05	IW1TL170UFX
			OPERATOR FAILS TO ACTUATE IRWST INJECTION	5.00E-01	IWN-MAN00
			COND. PROB. OF RHN-MAN05 (OP. FAILS TO OPEN RNS MOV V023)	5.00E-01	RHN-MAN05C
37	1.07E-08	0.02	LOSS OF CCS/SWS WITH RCS DRAINED INITIATING EVENT OCCURS	7.16E-04	IEV-CCWD
			CCF OF GRAVITY INJECTION CHECK VALVES TO OPEN	3.00E-05	IWX-CV-AO
			OPERATOR FAILS TO RECOGNIZE NEED AND TO OPEN RNS MOV V023	5.00E-01	RHN-MAN05
38	1.07E-08	0.02	OVERDRAINING OF RCS DURING DRAIN DOWN TO MID-LOOP INITIATING EV	2.13E-04	IEV-RCSOD
			OPERATOR FAILS TO ISOLATE RNS PIPE RUPTURE	5.00E-01	RHN-MAN04
			IWX-XMTR	2.01E-04	IWX-XMTR
			REN-MAN04	5.00E-01	REN-MAN04

Table 54-13 (Sheet 6 of 28)

SHUTDOWN PRA SENSITIVITY CASE 3

NUMBER	CUTSET PROB	PERCENTAGE	BASIC EVENT NAME	EVENT PROB.	IDENTIFIER
39	1.07E-08	0.02	OVERDRAINING OF RCS DURING DRAIN DOWN TO MID-LOOP INITIATING EV	2.13E-04	IEV-RCSOD
			RHN-MAN04-SUCC	5.00E-01	RHN-MAN04-SUCC
			IWX-XMTR	2.01E-04	IWX-XMTR
			REN-MAN04	5.00E-01	REN-MAN04
40	9.74E-09	0.02	LOSS OF RNS WITH RCS DRAINED INITIATING EVENT OCCURS	9.69E-05	IEV-RNSD
			IWX-XMTR	2.01E-04	IWX-XMTR
			REN-MAN04	5.00E-01	REN-MAN04
41	9.11E-09	0.02	OVERDRAINING OF RCS DURING DRAIN DOWN TO MID-LOOP INITIATING EV	2.13E-04	IEV-RCSOD
			OPERATOR FAILS TO ISOLATE RNS PIPE RUPTURE	5.00E-01	RHN-MAN04
			COND. PROB. OF IWN-MAN00 (OP. FAILS TO ACTUATE IRWST INJ)	5.00E-01	IWN-MAN00C
			FAILURE OF OUTPUT DRIVER	1.71E-04	RNDEP023SA
42	9.11E-09	0.02	OVERDRAINING OF RCS DURING DRAIN DOWN TO MID-LOOP INITIATING EV	2.13E-04	IEV-RCSOD
			RHN-MAN04-SUCC	5.00E-01	RHN-MAN04-SUCC
			OPERATOR FAILS TO ACTUATE IRWST INJECTION	5.00E-01	IWN-MAN00
			FAILURE OF OUTPUT DRIVER	1.71E-04	RNDEP023SA
43	8.59E-09	0.02	LOSS OF CCS/SWS WITH RCS DRAINED INITIATING EVENT OCCURS	7.16E-04	IEV-CCWD
			REX-FL-GP	1.20E-05	REX-FL-GP
44	8.59E-09	0.02	LOSS OF CCS/SWS WITH RCS DRAINED INITIATING EVENT OCCURS	7.16E-04	IEV-CCWD
			CCF OF STRAINERS IN IRWST TANK	1.20E-05	IWX-FL-GP
45	8.30E-09	0.02	LOSS OF OFFSITE POWER INITIATING EVENT OCCURS WITH RCS FILL	1.82E-02	IEV-LOSPND
			OFFSITE AC POWER RECOVERED IN 2 HOURS	7.60E-01	SUC-R2S
			SOFTWARE CCF OF ALL CARDS	1.20E-06	CCX-SFTW
			FAILURE OF MANUAL DAS ACTUATION	5.00E-01	REC-MANDAS
46	7.51E-09	0.01	OVERDRAINING OF RCS DURING DRAIN DOWN TO MID-LOOP INITIATING EV	2.13E-04	IEV-RCSOD
			RHN-MAN04-SUCC	5.00E-01	RHN-MAN04-SUCC
			OPERATOR FAILS TO ACTUATE IRWST INJECTION	5.00E-01	IWN-MAN00
			CMF OF OUTPUT LOGIC I/Os	1.41E-04	CCX-PMDMOD1

Table 54-13 (Sheet 7 of 28)

SHUTDOWN PRA SENSITIVITY CASE 3

NUMBER	CUTSET PROB	PERCENTAGE	BASIC EVENT NAME	EVENT PROB.	IDENTIFIER
47	7.51E-09	0.01	OVERDRAINING OF RCS DURING DRAIN DOWN TO MID-LOOP INITIATING EV	2.13E-04	IEV-RCSOD
			OPERATOR FAILS TO ISOLATE RNS PIPE RUPTURE	5.00E-01	RHN-MAN04
			COND. PROB. OF IWN-MAN00 (OP. FAILS TO ACTUATE IRWST INJ)	5.00E-01	IWN-MAN00C
			CMF OF OUTPUT LOGIC I/Os	1.41E-04	CCX-PMDMOD1
48	6.26E-09	0.01	LOSS OF OFFSITE POWER INITIATING EVENT OCCURS WITH RCS DRAI	5.28E-03	IEV-LOSPD
			FAILURE TO RECOVER AC POWER IN 1 HOUR	4.20E-01	OTH-R1
			BATTERY DB1 UNAVAILABLE	2.70E-03	ED1MOD03
			FAILURE OF PMS OUTPUT LOGIC I/Os	2.09E-03	PMAMOD11
			OPERATOR FAILS TO RECOGNIZE NEED AND TO OPEN RNS MOV V023	5.00E-01	RHN-MAN05
49	5.53E-09	0.01	LOSS OF CCS/SWS WITH RCS FILLED INITIATING EVENT OCCURS	3.99E-03	IEV-CCWND
			FAILURE OF MANUAL DAS REACTOR TRIP HARDWARE	1.00E-02	MDAS
			CCF OF ORIFICES	2.77E-04	CCX-ORY-SP
			OPERATOR FAILS TO RECOGNIZE THE NEED FOR RCS DEPRESSURIZAT	5.00E-01	LPM-MAN05
50	5.16E-09	0.01	OVERDRAINING OF RCS DURING DRAIN DOWN TO MID-LOOP INITIATING EV	2.13E-04	IEV-RCSOD
			RHN-MAN04-SUCC	5.00E-01	RHN-MAN04-SUCC
			OPERATOR FAILS TO ACTUATE IRWST INJECTION	5.00E-01	IWN-MAN00
			CMF OF OUTPUT LOGIC GROUPS	9.69E-05	CCX-PMD030
51	5.16E-09	0.01	OVERDRAINING OF RCS DURING DRAIN DOWN TO MID-LOOP INITIATING EV	2.13E-04	IEV-RCSOD
			OPERATOR FAILS TO ISOLATE RNS PIPE RUPTURE	5.00E-01	RHN-MAN04
			COND. PROB. OF IWN-MAN00 (OP. FAILS TO ACTUATE IRWST INJ)	5.00E-01	IWN-MAN00C
			CMF OF OUTPUT LOGIC GROUPS	9.69E-05	CCX-PMD030
52	4.94E-09	0.01	LOSS OF CCS/SWS WITH RCS DRAINED INITIATING EVENT OCCURS	7.16E-04	IEV-CCWD
			CCF OF LOGIC GROUP PROCESSING	1.38E-05	CCX-PMA030X
			OPERATOR FAILS TO RECOGNIZE NEED AND TO OPEN RNS MOV V023	5.00E-01	RHN-MAN05
53	4.64E-09	0.01	LOSS OF CCS/SWS WITH RCS DRAINED INITIATING EVENT OCCURS	7.16E-04	IEV-CCWD
			CCF OF INPUT LOGIC GROUPS	2.59E-05	CCX-INPUT-LOGICX
			OPERATOR FAILS TO ACTUATE IRWST INJECTION	5.00E-01	IWN-MAN00
			COND. PROB. OF RHN-MAN05 (OP. FAILS TO OPEN RNS MOV V023)	5.00E-01	RHN-MAN05C

Table 54-13 (Sheet 8 of 28)

SHUTDOWN PRA SENSITIVITY CASE 3

NUMBER	CUTSET PROB	PERCENTAGE	BASIC EVENT NAME	EVENT PROB.	IDENTIFIER
54	4.63E-09	0.01	LOSS OF OFFSITE POWER INITIATING EVENT OCCURS WITH RCS DRAI	5.28E-03	IEV-LOSPD
			FAILURE TO RECOVER AC POWER IN 1 HOUR	4.20E-01	OTH-R1
			CCF TO START OF ENGINE-DRIVEN FUEL PUMPS	2.00E-03	ZOX-PD-ES
			FAILURE OF PMS OUTPUT LOGIC I/Os	2.09E-03	PMAMOD11
			OPERATOR FAILS TO RECOGNIZE NEED AND TO OPEN RNS MOV V023	5.00E-01	RHN-MAN05
55	4.40E-09	0.01	LOSS OF RNS WITH RCS FILLED INITIATING EVENT OCCURS	1.02E-03	IEV-RNSND
			FAILURE OF MANUAL DAS ACTUATION	5.00E-01	REC-MANDAS
			CCF OF THE POWER INTERFACE OUTPUT BOARDS IN PMS	8.62E-06	CCX-EP-SAM
56	4.01E-09	0.01	LOSS OF CCS/SWS WITH RCS FILLED INITIATING EVENT OCCURS	3.99E-03	IEV-CCWND
			FAILURE OF MANUAL DAS REACTOR TRIP HARDWARE	1.00E-02	MDAS
			CCF OF PRESSURE TRANSMITTERS	2.01E-04	CCX-XMTR195
			OPERATOR FAILS TO RECOGNIZE THE NEED FOR RCS DEPRESSURIZAT	5.00E-01	LPM-MAN05
57	3.94E-09	0.01	LOSS OF CCS/SWS WITH RCS DRAINED INITIATING EVENT OCCURS	7.16E-04	IEV-CCWD
			SOFTWARE CCF OF OUTPUT LOGIC I/Os	1.10E-05	CCX-PMAMOD1-SW
			OPERATOR FAILS TO RECOGNIZE NEED AND TO OPEN RNS MOV V023	5.00E-01	RHN-MAN05
58	3.67E-09	0.01	LOSS OF OFFSITE POWER INITIATING EVENT OCCURS WITH RCS DRAI	5.28E-03	IEV-LOSPD
			OFFSITE AC POWER RECOVERED IN 1 HOUR	5.80E-01	SUC-R1S
			SOFTWARE CCF OF ALL CARDS	1.20E-06	CCX-SFTW
59	3.47E-09	0.01	LOSS OF OFFSITE POWER INITIATING EVENT OCCURS WITH RCS DRAI	5.28E-03	IEV-LOSPD
			FAILURE TO RECOVER AC POWER IN 1 HOUR	4.20E-01	OTH-R1
			BATTERY DB1 UNAVAILABLE	2.70E-03	ED1MOD03
			FAILURE UPON DEMAND OF LOGIC GROUP PROCESSING	1.16E-03	PMA0301ASA
			OPERATOR FAILS TO RECOGNIZE NEED AND TO OPEN RNS MOV V023	5.00E-01	RHN-MAN05
60	3.47E-09	0.01	LOSS OF OFFSITE POWER INITIATING EVENT OCCURS WITH RCS DRAI	5.28E-03	IEV-LOSPD
			FAILURE TO RECOVER AC POWER IN 1 HOUR	4.20E-01	OTH-R1
			BATTERY DB1 UNAVAILABLE	2.70E-03	ED1MOD03
			FAILURE UPON DEMAND OF LOGIC GROUP PROCESSING	1.16E-03	PMA0301BSA
			OPERATOR FAILS TO RECOGNIZE NEED AND TO OPEN RNS MOV V023	5.00E-01	RHN-MAN05

Table 54-13 (Sheet 9 of 28)

SHUTDOWN PRA SENSITIVITY CASE 3

NUMBER	CUTSET PROB	PERCENTAGE	BASIC EVENT NAME	EVENT PROB.	IDENTIFIER
61	3.20E-09	0.01	OVERDRAINING OF RCS DURING DRAIN DOWN TO MID-LOOP INITIATING EV	2.13E-04	IEV-RCSOD
			RHN-MAN04-SUCC	5.00E-01	RHN-MAN04-SUCC
			CCF OF ADS 4TH STAGE SQUIB VALVES TO OPEN	3.00E-05	ADX-EV-SA
62	3.20E-09	0.01	OVERDRAINING OF RCS DURING DRAIN DOWN TO MID-LOOP INITIATING EV	2.13E-04	IEV-RCSOD
			OPERATOR FAILS TO ISOLATE RNS PIPE RUPTURE	5.00E-01	RHN-MAN04
			CCF OF ADS 4TH STAGE SQUIB VALVES TO OPEN	3.00E-05	ADX-EV-SA
63	3.09E-09	0.01	LOSS OF CCS/SWS WITH RCS DRAINED INITIATING EVENT OCCURS	7.16E-04	IEV-CCWD
			FAILURE OF MANUAL DAS ACTUATION	5.00E-01	REC-MANDAS
			CCF OF THE POWER INTERFACE OUTPUT BOARDS IN PMS	8.62E-06	CCX-EP-SAM
64	2.91E-09	0.01	LOSS OF RNS WITH RCS DRAINED INITIATING EVENT OCCURS	9.69E-05	IEV-RNSD
			CCF OF ADS 4TH STAGE SQUIB VALVES TO OPEN	3.00E-05	ADX-EV-SA
65	2.78E-09	0.01	LOSS OF OFFSITE POWER INITIATING EVENT OCCURS WITH RCS DRAI	5.28E-03	IEV-LOSPD
			FAILURE TO RECOVER AC POWER IN 1 HOUR	4.20E-01	OTH-R1
			COMMON CAUSE FAILURE 4KV BREAKERS TO OPEN	1.20E-03	ECX-CB-GO
			FAILURE OF PMS OUTPUT LOGIC I/Os	2.09E-03	PMAMOD11
			OPERATOR FAILS TO RECOGNIZE NEED AND TO OPEN RNS MOV V023	5.00E-01	RHN-MAN05
66	2.78E-09	0.01	OVERDRAINING OF RCS DURING DRAIN DOWN TO MID-LOOP INITIATING EV	2.13E-04	IEV-RCSOD
			RHN-MAN04-SUCC	5.00E-01	RHN-MAN04-SUCC
			COND. PROB. OF REC-MANDAS (FAILURE OF MANUAL DAS ACTUATI	5.06E-01	REC-MANDASC
			COMMON MODE FAILURE OF INPUT LOGIC GROUPS	1.03E-04	CCX-INPUT-LOGIC
			OPERATOR FAILS TO ACTUATE ADS BEFORE CORE DAMAGE	5.00E-01	AND-MAN01
67	2.77E-09	0.01	OVERDRAINING OF RCS DURING DRAIN DOWN TO MID-LOOP INITIATING EV	2.13E-04	IEV-RCSOD
			OPERATOR FAILS TO ISOLATE RNS PIPE RUPTURE	5.00E-01	RHN-MAN04
			IWX-MV-GO1	2.60E-05	IWX-MV-GO1
68	2.77E-09	0.01	OVERDRAINING OF RCS DURING DRAIN DOWN TO MID-LOOP INITIATING EV	2.13E-04	IEV-RCSOD
			OPERATOR FAILS TO ISOLATE RNS PIPE RUPTURE	5.00E-01	RHN-MAN04
			IWX-EV4-SA	2.60E-05	IWX-EV4-SA
69	2.77E-09	0.01	OVERDRAINING OF RCS DURING DRAIN DOWN TO MID-LOOP INITIATING EV	2.13E-04	IEV-RCSOD
			RHN-MAN04-SUCC	5.00E-01	RHN-MAN04-SUCC
			IWX-EV4-SA	2.60E-05	IWX-EV4-SA

Table 54-13 (Sheet 10 of 28)

SHUTDOWN PRA SENSITIVITY CASE 3

NUMBER	CUTSET PROB	PERCENTAGE	BASIC EVENT NAME	EVENT PROB.	IDENTIFIER
70	2.77E-09	0.01	OVERDRAINING OF RCS DURING DRAIN DOWN TO MID-LOOP INITIATING EV	2.13E-04	IEV-RCSOD
			RHN-MAN04-SUCC	5.00E-01	RHN-MAN04-SUCC
			IWX-MV-GO1	2.60E-05	IWX-MV-GO1
71	2.76E-09	0	LOSS OF CCS/SWS WITH RCS FILLED INITIATING EVENT OCCURS	3.99E-03	IEV-CCWND
			FAILURE OF MANUAL DAS REACTOR TRIP HARDWARE	1.00E-02	MDAS
			CCF OF ORIFICES	2.77E-04	CCX-ORY-SP
			PRN-MAN01	5.00E-01	PRN-MAN01
			OPERATOR FAILS TO ACTUATE ADS BEFORE CORE DAMAGE	5.00E-01	ADN-MAN01
72	2.66E-09	0	LOSS OF OFFSITE POWER INITIATING EVENT OCCURS WITH RCS DRAI	5.28E-03	IEV-LOSPD
			FAILURE TO RECOVER AC POWER IN 1 HOUR	4.20E-01	OTH-R1
			SOFTWARE CCF OF ALL CARDS	1.20E-06	CCX-SFTW
73	2.65E-09	0	OVERDRAINING OF RCS DURING DRAIN DOWN TO MID-LOOP INITIATING EV	2.13E-04	IEV-RCSOD
			RHN-MAN04-SUCC	5.00E-01	RHN-MAN04-SUCC
			CCF OF MUX LOGIC GROUPS	4.98E-05	CCX-PMAMOD4
			OPERATOR FAILS TO RECOGNIZE NEED AND TO OPEN RNS MOV V023	5.00E-01	RHN-MAN05
74	2.65E-09	0	OVERDRAINING OF RCS DURING DRAIN DOWN TO MID-LOOP INITIATING EV	2.13E-04	IEV-RCSOD
			OPERATOR FAILS TO ISOLATE RNS PIPE RUPTURE	5.00E-01	RHN-MAN04
			CCF OF MUX LOGIC GROUPS	4.98E-05	CCX-PMAMOD4
			OPERATOR FAILS TO RECOGNIZE NEED AND TO OPEN RNS MOV V023	5.00E-01	RHN-MAN05
75	2.65E-09	0	OVERDRAINING OF RCS DURING DRAIN DOWN TO MID-LOOP INITIATING EV	2.13E-04	IEV-RCSOD
			OPERATOR FAILS TO ISOLATE RNS PIPE RUPTURE	5.00E-01	RHN-MAN04
			COND. PROB. OF IWN-MAN00 (OP. FAILS TO ACTUATE IRWST INJ)	5.00E-01	IWN-MAN00C
			CMF OF MUX LOGIC GROUPS	4.98E-05	CCX-PMDMOD4
76	2.65E-09	0	OVERDRAINING OF RCS DURING DRAIN DOWN TO MID-LOOP INITIATING EV	2.13E-04	IEV-RCSOD
			RHN-MAN04-SUCC	5.00E-01	RHN-MAN04-SUCC
			OPERATOR FAILS TO ACTUATE IRWST INJECTION	5.00E-01	IWN-MAN00
			CMF OF MUX LOGIC GROUPS	4.98E-05	CCX-PMDMOD4
77	2.62E-09	0	LOSS OF OFFSITE POWER INITIATING EVENT OCCURS WITH RCS FILL	1.82E-02	IEV-LOSPND
			FAILURE TO RECOVER AC POWER IN 2 HOURS	2.40E-01	OTH-R2
			SOFTWARE CCF OF ALL CARDS	1.20E-06	CCX-SFTW
			FAILURE OF MANUAL DAS ACTUATION	5.00E-01	REC-MANDAS

Table 54-13 (Sheet 11 of 28)

SHUTDOWN PRA SENSITIVITY CASE 3

NUMBER	CUTSET PROB	PERCENTAGE	BASIC EVENT NAME	EVENT PROB.	IDENTIFIER
78	2.60E-09	0	LOSS OF CCS/SWS WITH RCS DRAINED INITIATING EVENT OCCURS	7.16E-04	IEV-CCWD
			CCF OF ORIFICES	3.63E-06	CCX-ORY-SPX
79	2.57E-09	0	LOSS OF OFFSITE POWER INITIATING EVENT OCCURS WITH RCS DRAI	5.28E-03	IEV-LOSPD
			FAILURE TO RECOVER AC POWER IN 1 HOUR	4.20E-01	OTH-R1
			CCF TO START OF ENGINE-DRIVEN FUEL PUMPS	2.00E-03	ZOX-PD-ES
			FAILURE UPON DEMAND OF LOGIC GROUP PROCESSING	1.16E-03	PMA0301ASA
			OPERATOR FAILS TO RECOGNIZE NEED AND TO OPEN RNS MOV V023	5.00E-01	RHN-MAN05
80	2.57E-09	0	LOSS OF OFFSITE POWER INITIATING EVENT OCCURS WITH RCS DRAI	5.28E-03	IEV-LOSPD
			FAILURE TO RECOVER AC POWER IN 1 HOUR	4.20E-01	OTH-R1
			CCF TO START OF ENGINE-DRIVEN FUEL PUMPS	2.00E-03	ZOX-PD-ES
			FAILURE UPON DEMAND OF LOGIC GROUP PROCESSING	1.16E-03	PMA0301BSA
			OPERATOR FAILS TO RECOGNIZE NEED AND TO OPEN RNS MOV V023	5.00E-01	RHN-MAN05
81	2.55E-09	0	OVERDRAINING OF RCS DURING DRAIN DOWN TO MID-LOOP INITIATING EV	2.13E-04	IEV-RCSOD
			RHN-MAN04-SUCC	5.00E-01	RHN-MAN04-SUCC
			COND. PROB. OF REC-MANDAS (FAILURE OF MANUAL DAS ACTUATI	5.06E-01	REC-MANDASC
			ORIFICE FAILURE DUE TO PLUGGING	9.46E-05	IW2OR160SPX
			OPERATOR FAILS TO ACTUATE ADS BEFORE CORE DAMAGE	5.00E-01	AND-MAN01
82	2.55E-09	0	OVERDRAINING OF RCS DURING DRAIN DOWN TO MID-LOOP INITIATING EV	2.13E-04	IEV-RCSOD
			RHN-MAN04-SUCC	5.00E-01	RHN-MAN04-SUCC
			COND. PROB. OF REC-MANDAS (FAILURE OF MANUAL DAS ACTUATI	5.06E-01	REC-MANDASC
			ORIFICE FAILURE DUE TO PLUGGING	9.46E-05	IW1OR170SPX
			OPERATOR FAILS TO ACTUATE ADS BEFORE CORE DAMAGE	5.00E-01	AND-MAN01
83	2.53E-09	0	LOSS OF RNS WITH RCS DRAINED INITIATING EVENT OCCURS	9.69E-05	IEV-RNSD
			COND. PROB. OF REC-MANDAS (FAILURE OF MANUAL DAS ACTUATI	5.06E-01	REC-MANDASC
			COMMON MODE FAILURE OF INPUT LOGIC GROUPS	1.03E-04	CCX-INPUT-LOGIC
			OPERATOR FAILS TO ACTUATE ADS BEFORE CORE DAMAGE	5.00E-01	AND-MAN01
84	2.52E-09	0	LOSS OF RNS WITH RCS DRAINED INITIATING EVENT OCCURS	9.69E-05	IEV-RNSD
			IWX-MV-GO1	2.60E-05	IWX-MV-GO1
85	2.52E-09	0	LOSS OF RNS WITH RCS DRAINED INITIATING EVENT OCCURS	9.69E-05	IEV-RNSD
			IWX-EV4-SA	2.60E-05	IWX-EV4-SA

Table 54-13 (Sheet 12 of 28)

SHUTDOWN PRA SENSITIVITY CASE 3

NUMBER	CUTSET PROB	PERCENTAGE	BASIC EVENT NAME	EVENT PROB.	IDENTIFIER
86	2.47E-09	0	OVERDRAINING OF RCS DURING DRAIN DOWN TO MID-LOOP INITIATING EV	2.13E-04	IEV-RCSOD
			RHN-MAN04-SUCC	5.00E-01	RHN-MAN04-SUCC
			CCF OF ACTUATION LOGIC GROUPS	4.63E-05	CCX-PMAMOD1X
			OPERATOR FAILS TO RECOGNIZE NEED AND TO OPEN RNS MOV V023	5.00E-01	RHN-MAN05
87	2.47E-09	0	OVERDRAINING OF RCS DURING DRAIN DOWN TO MID-LOOP INITIATING EV	2.13E-04	IEV-RCSOD
			OPERATOR FAILS TO ISOLATE RNS PIPE RUPTURE	5.00E-01	RHN-MAN04
			CCF OF ACTUATION LOGIC GROUPS	4.63E-05	CCX-PMAMOD1X
			OPERATOR FAILS TO RECOGNIZE NEED AND TO OPEN RNS MOV V023	5.00E-01	RHN-MAN05
88	2.39E-09	0	LOSS OF CCS/SWS WITH RCS FILLED INITIATING EVENT OCCURS	3.99E-03	IEV-CCWND
			SOFTWARE CCF OF ALL CARDS	1.20E-06	CCX-SFTW
			FAILURE OF MANUAL DAS ACTUATION	5.00E-01	REC-MANDAS
89	2.32E-09	0	LOSS OF RNS WITH RCS DRAINED INITIATING EVENT OCCURS	9.69E-05	IEV-RNSD
			COND. PROB. OF REC-MANDAS (FAILURE OF MANUAL DAS ACTUATI	5.06E-01	REC-MANDASC
			ORIFICE FAILURE DUE TO PLUGGING	9.46E-05	IW2OR160SPX
			OPERATOR FAILS TO ACTUATE ADS BEFORE CORE DAMAGE	5.00E-01	ADN-MAN01
90	2.32E-09	0	LOSS OF RNS WITH RCS DRAINED INITIATING EVENT OCCURS	9.69E-05	IEV-RNSD
			COND. PROB. OF REC-MANDAS (FAILURE OF MANUAL DAS ACTUATI	5.06E-01	REC-MANDASC
			ORIFICE FAILURE DUE TO PLUGGING	9.46E-05	IW1OR170SPX
			OPERATOR FAILS TO ACTUATE ADS BEFORE CORE DAMAGE	5.00E-01	ADN-MAN01
91	2.29E-09	0	LOSS OF RNS WITH RCS DRAINED INITIATING EVENT OCCURS	9.69E-05	IEV-RNSD
			ORIFICE FAILURE DUE TO PLUGGING	9.46E-05	IW2OR160SPX
			OPERATOR FAILS TO ACTUATE IRWST INJECTION	5.00E-01	IWN-MAN00
			COND. PROB. OF RHN-MAN05 (OP. FAILS TO OPEN RNS MOV V023)	5.00E-01	RHN-MAN05C
92	2.29E-09	0	LOSS OF RNS WITH RCS DRAINED INITIATING EVENT OCCURS	9.69E-05	IEV-RNSD
			ORIFICE FAILURE DUE TO PLUGGING	9.46E-05	IW1OR170SPX
			OPERATOR FAILS TO ACTUATE IRWST INJECTION	5.00E-01	IWN-MAN00
			COND. PROB. OF RHN-MAN05 (OP. FAILS TO OPEN RNS MOV V023)	5.00E-01	RHN-MAN05C
93	2.24E-09	0	LOSS OF RNS WITH RCS DRAINED INITIATING EVENT OCCURS	9.69E-05	IEV-RNSD
			CCF OF ACTUATION LOGIC GROUPS	4.63E-05	CCX-PMAMOD1X
			OPERATOR FAILS TO RECOGNIZE NEED AND TO OPEN RNS MOV V023	5.00E-01	RHN-MAN05

Table 54-13 (Sheet 13 of 28)

SHUTDOWN PRA SENSITIVITY CASE 3

NUMBER	CUTSET PROB	PERCENTAGE	BASIC EVENT NAME	EVENT PROB.	IDENTIFIER
94	2.08E-09	0	LOSS OF RNS WITH RCS DRAINED INITIATING EVENT OCCURS	9.69E-05	IEV-RNSD
			CCF OF ACTUATION LOGIC GROUPS	8.58E-05	CCX-PMAMOD2X
			OPERATOR FAILS TO ACTUATE IRWST INJECTION	5.00E-01	IWN-MAN00
			COND. PROB. OF RHN-MAN05 (OP. FAILS TO OPEN RNS MOV V023)	5.00E-01	RHN-MAN05C
95	2.05E-09	0	LOSS OF CCS/SWS WITH RCS FILLED INITIATING EVENT OCCURS	3.99E-03	IEV-CCWND
			FAILURE OF MANUAL DAS REACTOR TRIP HARDWARE	1.00E-02	MDAS
			COMMON MODE FAILURE OF INPUT LOGIC GROUPS	1.03E-04	CCX-INPUT-LOGIC
			OPERATOR FAILS TO RECOGNIZE THE NEED FOR RCS DEPRESSURIZAT	5.00E-01	LPM-MAN05
96	2.00E-09	0	LOSS OF CCS/SWS WITH RCS FILLED INITIATING EVENT OCCURS	3.99E-03	IEV-CCWND
			FAILURE OF MANUAL DAS REACTOR TRIP HARDWARE	1.00E-02	MDAS
			CCF OF PRESSURE TRANSMITTERS	2.01E-04	CCX-XMTR195
			PRN-MAN01	5.00E-01	PRN-MAN01
			OPERATOR FAILS TO ACTUATE ADS BEFORE CORE DAMAGE	5.00E-01	AND-MAN01
97	1.97E-09	0	LOSS OF CCS/SWS WITH RCS DRAINED INITIATING EVENT OCCURS	7.16E-04	IEV-CCWD
			CCF OF SOFTWARE FOR INPUT LOGIC GROUPS	1.10E-05	CCX-IN-LOGIC-SW
			OPERATOR FAILS TO ACTUATE IRWST INJECTION	5.00E-01	IWN-MAN00
			COND. PROB. OF RHN-MAN05 (OP. FAILS TO OPEN RNS MOV V023)	5.00E-01	RHN-MAN05C
98	1.97E-09	0	LOSS OF CCS/SWS WITH RCS DRAINED INITIATING EVENT OCCURS	7.16E-04	IEV-CCWD
			CCF OF SOFTWARE FOR ACTUATION LOGIC GROUPS	1.10E-05	CCX-PMAMOD2-SW
			OPERATOR FAILS TO ACTUATE IRWST INJECTION	5.00E-01	IWN-MAN00
			COND. PROB. OF RHN-MAN05 (OP. FAILS TO OPEN RNS MOV V023)	5.00E-01	RHN-MAN05C
99	1.88E-09	0	LOSS OF CCS/SWS WITH RCS DRAINED INITIATING EVENT OCCURS	7.16E-04	IEV-CCWD
			CCF OF PRESSURE TRANSMITTERS	2.63E-06	CCX-XMTRX
100	1.84E-09	0	OVERDRAINING OF RCS DURING DRAIN DOWN TO MID-LOOP INITIATING EV	2.13E-04	IEV-RCSOD
			RHN-MAN04-SUCC	5.00E-01	RHN-MAN04-SUCC
			COND. PROB. OF REC-MANDAS (FAILURE OF MANUAL DAS ACTUATI	5.06E-01	REC-MANDASC
			LEVEL TRANSMITTER FAILURE	6.84E-05	IW2TL160UFX
			OPERATOR FAILS TO ACTUATE ADS BEFORE CORE DAMAGE	5.00E-01	AND-MAN01

Table 54-13 (Sheet 14 of 28)

SHUTDOWN PRA SENSITIVITY CASE 3

NUMBER	CUTSET PROB	PERCENTAGE	BASIC EVENT NAME	EVENT PROB.	IDENTIFIER
101	1.84E-09	0	OVERDRAINING OF RCS DURING DRAIN DOWN TO MID-LOOP INITIATING EV	2.13E-04	IEV-RCSOD
			RHN-MAN04-SUCC	5.00E-01	RHN-MAN04-SUCC
			COND. PROB. OF REC-MANDAS (FAILURE OF MANUAL DAS ACTUATI	5.06E-01	REC-MANDASC
			LEVEL TRANSMITTER FAILURE	6.84E-05	IW1TL170UFX
			OPERATOR FAILS TO ACTUATE ADS BEFORE CORE DAMAGE	5.00E-01	ADN-MAN01
102	1.74E-09	0	LOCA/RNS-V024 OPENS INITIATING EVENT OCCURS WITH RCS FILL	1.73E-05	IEV-LOCA24ND
			IWX-XMTR	2.01E-04	IWX-XMTR
			REN-MAN04	5.00E-01	REN-MAN04
103	1.69E-09	0	LOSS OF OFFSITE POWER INITIATING EVENT OCCURS WITH RCS DRAI	5.28E-03	IEV-LOSPD
			FAILURE TO RECOVER AC POWER IN 1 HOUR	4.20E-01	OTH-R1
			COMMON CAUSE FAILURE 4KV BREAKER TO CLOSE	7.30E-04	ECX-CB-GC
			FAILURE OF PMS OUTPUT LOGIC I/Os	2.09E-03	PMAMOD11
			OPERATOR FAILS TO RECOGNIZE NEED AND TO OPEN RNS MOV V023	5.00E-01	RHN-MAN05
104	1.68E-09	0	LOSS OF RNS WITH RCS DRAINED INITIATING EVENT OCCURS	9.69E-05	IEV-RNSD
			COND. PROB. OF REC-MANDAS (FAILURE OF MANUAL DAS ACTUATI	5.06E-01	REC-MANDASC
			LEVEL TRANSMITTER FAILURE	6.84E-05	IW1TL170UFX
			OPERATOR FAILS TO ACTUATE ADS BEFORE CORE DAMAGE	5.00E-01	ADN-MAN01
105	1.68E-09	0	LOSS OF RNS WITH RCS DRAINED INITIATING EVENT OCCURS	9.69E-05	IEV-RNSD
			COND. PROB. OF REC-MANDAS (FAILURE OF MANUAL DAS ACTUATI	5.06E-01	REC-MANDASC
			LEVEL TRANSMITTER FAILURE	6.84E-05	IW2TL160UFX
			OPERATOR FAILS TO ACTUATE ADS BEFORE CORE DAMAGE	5.00E-01	ADN-MAN01
106	1.66E-09	0	LOSS OF RNS WITH RCS DRAINED INITIATING EVENT OCCURS	9.69E-05	IEV-RNSD
			LEVEL TRANSMITTER FAILURE	6.84E-05	IW2TL160UFX
			OPERATOR FAILS TO ACTUATE IRWST INJECTION	5.00E-01	IWN-MAN00
			COND. PROB. OF RHN-MAN05 (OP. FAILS TO OPEN RNS MOV V023)	5.00E-01	RHN-MAN05C
107	1.66E-09	0	LOSS OF RNS WITH RCS DRAINED INITIATING EVENT OCCURS	9.69E-05	IEV-RNSD
			LEVEL TRANSMITTER FAILURE	6.84E-05	IW1TL170UFX
			OPERATOR FAILS TO ACTUATE IRWST INJECTION	5.00E-01	IWN-MAN00
			COND. PROB. OF RHN-MAN05 (OP. FAILS TO OPEN RNS MOV V023)	5.00E-01	RHN-MAN05C

Table 54-13 (Sheet 15 of 28)

SHUTDOWN PRA SENSITIVITY CASE 3

NUMBER	CUTSET PROB	PERCENTAGE	BASIC EVENT NAME	EVENT PROB.	IDENTIFIER
108	1.60E-09	0	OVERDRAINING OF RCS DURING DRAIN DOWN TO MID-LOOP INITIATING EV	2.13E-04	IEV-RCSOD
			RHN-MAN04-SUCC	5.00E-01	RHN-MAN04-SUCC
			CCF OF GRAVITY INJECTION CHECK VALVES TO OPEN	3.00E-05	IWX-CV-AO
			OPERATOR FAILS TO RECOGNIZE NEED AND TO OPEN RNS MOV V023	5.00E-01	RHN-MAN05
109	1.60E-09	0	OVERDRAINING OF RCS DURING DRAIN DOWN TO MID-LOOP INITIATING EV	2.13E-04	IEV-RCSOD
			OPERATOR FAILS TO ISOLATE RNS PIPE RUPTURE	5.00E-01	RHN-MAN04
			CCF OF GRAVITY INJECTION CHECK VALVES TO OPEN	3.00E-05	IWX-CV-AO
			OPERATOR FAILS TO RECOGNIZE NEED AND TO OPEN RNS MOV V023	5.00E-01	RHN-MAN05
110	1.54E-09	0	LOSS OF OFFSITE POWER INITIATING EVENT OCCURS WITH RCS DRAI	5.28E-03	IEV-LOSPD
			FAILURE TO RECOVER AC POWER IN 1 HOUR	4.20E-01	OTH-R1
			BATTERY DB1 UNAVAILABLE	2.70E-03	ED1MOD03
			FAILURE OF INV., STATIC SWITCH AND ASSOC. BREAKERS	5.16E-04	IDAMOD05
			OPERATOR FAILS TO RECOGNIZE NEED AND TO OPEN RNS MOV V023	5.00E-01	RHN-MAN05
111	1.54E-09	0	LOSS OF OFFSITE POWER INITIATING EVENT OCCURS WITH RCS DRAI	5.28E-03	IEV-LOSPD
			FAILURE TO RECOVER AC POWER IN 1 HOUR	4.20E-01	OTH-R1
			COMMON CAUSE FAILURE 4KV BREAKERS TO OPEN	1.20E-03	ECX-CB-GO
			FAILURE UPON DEMAND OF LOGIC GROUP PROCESSING	1.16E-03	PMA0301ASA
			OPERATOR FAILS TO RECOGNIZE NEED AND TO OPEN RNS MOV V023	5.00E-01	RHN-MAN05
112	1.54E-09	0	LOSS OF OFFSITE POWER INITIATING EVENT OCCURS WITH RCS DRAI	5.28E-03	IEV-LOSPD
			FAILURE TO RECOVER AC POWER IN 1 HOUR	4.20E-01	OTH-R1
			COMMON CAUSE FAILURE 4KV BREAKERS TO OPEN	1.20E-03	ECX-CB-GO
			FAILURE UPON DEMAND OF LOGIC GROUP PROCESSING	1.16E-03	PMA0301BSA
			OPERATOR FAILS TO RECOGNIZE NEED AND TO OPEN RNS MOV V023	5.00E-01	RHN-MAN05
113	1.45E-09	0	LOSS OF RNS WITH RCS DRAINED INITIATING EVENT OCCURS	9.69E-05	IEV-RNSD
			CCF OF GRAVITY INJECTION CHECK VALVES TO OPEN	3.00E-05	IWX-CV-AO
			OPERATOR FAILS TO RECOGNIZE NEED AND TO OPEN RNS MOV V023	5.00E-01	RHN-MAN05
114	1.41E-09	0	LOSS OF RNS WITH RCS FILLED INITIATING EVENT OCCURS	1.02E-03	IEV-RNSND
			FAILURE OF MANUAL DAS REACTOR TRIP HARDWARE	1.00E-02	MDAS
			CCF OF ORIFICES	2.77E-04	CCX-ORY-SP
			OPERATOR FAILS TO RECOGNIZE THE NEED FOR RCS DEPRESSURIZAT	5.00E-01	LPM-MAN05

Table 54-13 (Sheet 16 of 28)

SHUTDOWN PRA SENSITIVITY CASE 3

NUMBER	CUTSET PROB	PERCENTAGE	BASIC EVENT NAME	EVENT PROB.	IDENTIFIER
115	1.28E-09	0	OVERDRAINING OF RCS DURING DRAIN DOWN TO MID-LOOP INITIATING EV	2.13E-04	IEV-RCSOD
			RHN-MAN04-SUCC	5.00E-01	RHN-MAN04-SUCC
			CCF OF STRAINERS IN IRWST TANK	1.20E-05	IWX-FL-GP
116	1.28E-09	0	OVERDRAINING OF RCS DURING DRAIN DOWN TO MID-LOOP INITIATING EV	2.13E-04	IEV-RCSOD
			RHN-MAN04-SUCC	5.00E-01	RHN-MAN04-SUCC
			REX-FL-GP	1.20E-05	REX-FL-GP
117	1.28E-09	0	OVERDRAINING OF RCS DURING DRAIN DOWN TO MID-LOOP INITIATING EV	2.13E-04	IEV-RCSOD
			OPERATOR FAILS TO ISOLATE RNS PIPE RUPTURE	5.00E-01	RHN-MAN04
			REX-FL-GP	1.20E-05	REX-FL-GP
118	1.28E-09	0	OVERDRAINING OF RCS DURING DRAIN DOWN TO MID-LOOP INITIATING EV	2.13E-04	IEV-RCSOD
			OPERATOR FAILS TO ISOLATE RNS PIPE RUPTURE	5.00E-01	RHN-MAN04
			CCF OF STRAINERS IN IRWST TANK	1.20E-05	IWX-FL-GP
119	1.21E-09	0	LOCA/RNS-V024 OPENS INITIATING EVENT OCCURS WITH RCS FILL	1.73E-05	IEV-LOCA24ND
			CCF OF ORIFICES	2.77E-04	CCX-ORY-SP
			COND. PROB. OF REC-MANDAS (FAILURE OF MANUAL DAS ACTUATI	5.06E-01	REC-MANDASC
			OPERATOR FAILS TO ACTUATE ADS BEFORE CORE DAMAGE	5.00E-01	AND-MAN01
120	1.21E-09	0	LOCA/RNS-V024 OPENS INITIATING EVENT OCCURS WITH RCS FILL	1.73E-05	IEV-LOCA24ND
			CCF OF ORIFICES	2.77E-04	CCX-ORY-SP
			COND. PROB. OF REC-MANDAS (FAILURE OF MANUAL DAS ACTUATI	5.06E-01	REC-MANDASC
			OPERATOR FAILS TO RECOGNIZE THE NEED FOR RCS DEPRESSURIZAT	5.00E-01	LPM-MAN05
121	1.16E-09	0	LOSS OF RNS WITH RCS DRAINED INITIATING EVENT OCCURS	9.69E-05	IEV-RNSD
			REX-FL-GP	1.20E-05	REX-FL-GP
122	1.16E-09	0	LOSS OF RNS WITH RCS DRAINED INITIATING EVENT OCCURS	9.69E-05	IEV-RNSD
			CCF OF STRAINERS IN IRWST TANK	1.20E-05	IWX-FL-GP
123	1.16E-09	0	LOCA/RNS-V024 OPENS INITIATING EVENT OCCURS WITH RCS DRAI	1.15E-05	IEV-LOCA24D
			IWX-XMTR	2.01E-04	IWX-XMTR
			REN-MAN04	5.00E-01	REN-MAN04

Table 54-13 (Sheet 17 of 28)

SHUTDOWN PRA SENSITIVITY CASE 3

NUMBER	CUTSET PROB	PERCENTAGE	BASIC EVENT NAME	EVENT PROB.	IDENTIFIER
124	1.14E-09	0	LOSS OF OFFSITE POWER INITIATING EVENT OCCURS WITH RCS DRAI	5.28E-03	IEV-LOSPD
			FAILURE TO RECOVER AC POWER IN 1 HOUR	4.20E-01	OTH-R1
			CCF TO START OF ENGINE-DRIVEN FUEL PUMPS	2.00E-03	ZOX-PD-ES
			FAILURE OF INV., STATIC SWITCH AND ASSOC. BREAKERS	5.16E-04	IDAMOD05
			OPERATOR FAILS TO RECOGNIZE NEED AND TO OPEN RNS MOV V023	5.00E-01	RHN-MAN05
125	1.14E-09	0	LOSS OF OFFSITE POWER INITIATING EVENT OCCURS WITH RCS DRAI	5.28E-03	IEV-LOSPD
			FAILURE TO RECOVER AC POWER IN 1 HOUR	4.20E-01	OTH-R1
			PUMP MP 01B SEGMENT HARDWARE FAILURE OR DIVERTED FLOW	2.44E-02	SWBMOD02
			D/G FAILS TO START & RUN OR BKR 102 FAILS TO CLOSE	2.02E-02	ZO1MOD01
			FAILURE OF PMS OUTPUT LOGIC I/Os	2.09E-03	PMAMOD11
			OPERATOR FAILS TO RECOGNIZE NEED AND TO OPEN RNS MOV V023	5.00E-01	RHN-MAN05
126	1.13E-09	0	LOCA/RNS PIPE RUPTURE WITH RCS FILLED INIT. EVENT OCCURS	1.61E-05	IEV-LOCAPRND
			COND. PROB. OF REC-MANDAS (FAILURE OF MANUAL DAS ACTUATI	5.06E-01	REC-MANDASC
			CCF OF ORIFICES	2.77E-04	CCX-ORY-SP
			OPERATOR FAILS TO RECOGNIZE THE NEED FOR RCS DEPRESSURIZAT	5.00E-01	LPM-MAN05
127	1.05E-09	0	LOSS OF CCS/SWS WITH RCS DRAINED INITIATING EVENT OCCURS	7.16E-04	IEV-CCWD
			CCF OF THE POWER INTERFACE OUTPUT BOARDS IN PMS	2.94E-06	CCX-EP-SAMX
			OPERATOR FAILS TO RECOGNIZE NEED AND TO OPEN RNS MOV V023	5.00E-01	RHN-MAN05
128	1.03E-09	0	LOSS OF RNS WITH RCS FILLED INITIATING EVENT OCCURS	1.02E-03	IEV-RNSND
			FAILURE OF MANUAL DAS REACTOR TRIP HARDWARE	1.00E-02	MDAS
			CCF OF PRESSURE TRANSMITTERS	2.01E-04	CCX-XMTR195
			OPERATOR FAILS TO RECOGNIZE THE NEED FOR RCS DEPRESSURIZAT	5.00E-01	LPM-MAN05
129	1.02E-09	0	LOSS OF OFFSITE POWER INITIATING EVENT OCCURS WITH RCS DRAI	5.28E-03	IEV-LOSPD
			FAILURE TO RECOVER AC POWER IN 1 HOUR	4.20E-01	OTH-R1
			COMMON CAUSE FAILURE STANDBY DG TO RUN	4.40E-04	ZOX-DG-DR
			FAILURE OF PMS OUTPUT LOGIC I/Os	2.09E-03	PMAMOD11
			OPERATOR FAILS TO RECOGNIZE NEED AND TO OPEN RNS MOV V023	5.00E-01	RHN-MAN05

Table 54-13 (Sheet 18 of 28)

SHUTDOWN PRA SENSITIVITY CASE 3

NUMBER	CUTSET PROB	PERCENTAGE	BASIC EVENT NAME	EVENT PROB.	IDENTIFIER
130	9.49E-10	0	LOSS OF OFFSITE POWER INITIATING EVENT OCCURS WITH RCS DRAI	5.28E-03	IEV-LOSPD
			FAILURE TO RECOVER AC POWER IN 1 HOUR	4.20E-01	OTH-R1
			BATTERY DB1 UNAVAILABLE	2.70E-03	ED1MOD03
			LOSS OF DIST. PANEL OR BREAKER A07 SPURIOUSLY OPENS	3.17E-04	IDAMOD04
			OPERATOR FAILS TO RECOGNIZE NEED AND TO OPEN RNS MOV V023	5.00E-01	RHN-MAN05
131	9.46E-10	0	LOSS OF OFFSITE POWER INITIATING EVENT OCCURS WITH RCS DRAI	5.28E-03	IEV-LOSPD
			FAILURE TO RECOVER AC POWER IN 1 HOUR	4.20E-01	OTH-R1
			D/G FAILS TO START & RUN OR BKR 102 FAILS TO CLOSE	2.02E-02	ZO1MOD01
			D/G FAILS TO START & RUN OR BKR 202 FAILS TO CLOSE	2.02E-02	ZO2MOD01
			FAILURE OF PMS OUTPUT LOGIC I/Os	2.09E-03	PMAMOD11
			OPERATOR FAILS TO RECOGNIZE NEED AND TO OPEN RNS MOV V023	5.00E-01	RHN-MAN05
132	9.39E-10	0	LOSS OF OFFSITE POWER INITIATING EVENT OCCURS WITH RCS DRAI	5.28E-03	IEV-LOSPD
			FAILURE TO RECOVER AC POWER IN 1 HOUR	4.20E-01	OTH-R1
			COMMON CAUSE FAILURE 4KV BREAKER TO CLOSE	7.30E-04	ECX-CB-GC
			FAILURE UPON DEMAND OF LOGIC GROUP PROCESSING	1.16E-03	PMA0301ASA
			OPERATOR FAILS TO RECOGNIZE NEED AND TO OPEN RNS MOV V023	5.00E-01	RHN-MAN05
133	9.39E-10	0	LOSS OF OFFSITE POWER INITIATING EVENT OCCURS WITH RCS DRAI	5.28E-03	IEV-LOSPD
			FAILURE TO RECOVER AC POWER IN 1 HOUR	4.20E-01	OTH-R1
			COMMON CAUSE FAILURE 4KV BREAKER TO CLOSE	7.30E-04	ECX-CB-GC
			FAILURE UPON DEMAND OF LOGIC GROUP PROCESSING	1.16E-03	PMA0301BSA
			OPERATOR FAILS TO RECOGNIZE NEED AND TO OPEN RNS MOV V023	5.00E-01	RHN-MAN05
134	8.98E-10	0	LOSS OF OFFSITE POWER INITIATING EVENT OCCURS WITH RCS DRAI	5.28E-03	IEV-LOSPD
			FAILURE TO RECOVER AC POWER IN 1 HOUR	4.20E-01	OTH-R1
			BATTERY DB1 UNAVAILABLE	2.70E-03	ED1MOD03
			BUS UNAVAILABLE DUE TO TEST OR CORRECTIVE MAINTENANCE	3.00E-04	IDABSDS1TM
			OPERATOR FAILS TO RECOGNIZE NEED AND TO OPEN RNS MOV V023	5.00E-01	RHN-MAN05
135	8.80E-10	0	LOCA/RNS-V024 OPENS INITIATING EVENT OCCURS WITH RCS FILL	1.73E-05	IEV-LOCA24ND
			CCF OF PRESSURE TRANSMITTERS	2.01E-04	CCX-XMTR195
			COND. PROB. OF REC-MANDAS (FAILURE OF MANUAL DAS ACTUATI	5.06E-01	REC-MANDASC
			OPERATOR FAILS TO ACTUATE ADS BEFORE CORE DAMAGE	5.00E-01	AND-MAN01

Table 54-13 (Sheet 19 of 28)

SHUTDOWN PRA SENSITIVITY CASE 3

NUMBER	CUTSET PROB	PERCENTAGE	BASIC EVENT NAME	EVENT PROB.	IDENTIFIER
136	8.80E-10	0	LOCA/RNS-V024 OPENS INITIATING EVENT OCCURS WITH RCS FILL	1.73E-05	IEV-LOCA24ND
			CCF OF PRESSURE TRANSMITTERS	2.01E-04	CCX-XMTR195
			COND. PROB. OF REC-MANDAS (FAILURE OF MANUAL DAS ACTUATI	5.06E-01	REC-MANDASC
			OPERATOR FAILS TO RECOGNIZE THE NEED FOR RCS DEPRESSURIZAT	5.00E-01	LPM-MAN05
137	8.59E-10	0	LOSS OF CCS/SWS WITH RCS DRAINED INITIATING EVENT OCCURS	7.16E-04	IEV-CCWD
			SOFTWARE CCF OF ALL CARDS	1.20E-06	CCX-SFTW
138	8.19E-10	0	LOCA/RNS PIPE RUPTURE WITH RCS FILLED INIT. EVENT OCCURS	1.61E-05	IEV-LOCAPRND
			COND. PROB. OF REC-MANDAS (FAILURE OF MANUAL DAS ACTUATI	5.06E-01	REC-MANDASC
			CCF OF PRESSURE TRANSMITTERS	2.01E-04	CCX-XMTR195
			OPERATOR FAILS TO RECOGNIZE THE NEED FOR RCS DEPRESSURIZAT	5.00E-01	LPM-MAN05
139	8.09E-10	0	LOCA/RNS PIPE RUPTURE WITH RCS FILLED INIT. EVENT OCCURS	1.61E-05	IEV-LOCAPRND
			OPERATOR FAILS TO ISOLATE RNS PIPE RUPTURE	5.00E-01	RHN-MAN04
			IWX-XMTR	2.01E-04	IWX-XMTR
			REN-MAN04	5.00E-01	REN-MAN04
140	7.35E-10	0	OVERDRAINING OF RCS DURING DRAIN DOWN TO MID-LOOP INITIATING EV	2.13E-04	IEV-RCSOD
			RHN-MAN04-SUCC	5.00E-01	RHN-MAN04-SUCC
			CCF OF LOGIC GROUP PROCESSING	1.38E-05	CCX-PMA030X
			OPERATOR FAILS TO RECOGNIZE NEED AND TO OPEN RNS MOV V023	5.00E-01	RHN-MAN05
141	7.35E-10	0	OVERDRAINING OF RCS DURING DRAIN DOWN TO MID-LOOP INITIATING EV	2.13E-04	IEV-RCSOD
			OPERATOR FAILS TO ISOLATE RNS PIPE RUPTURE	5.00E-01	RHN-MAN04
			CCF OF LOGIC GROUP PROCESSING	1.38E-05	CCX-PMA030X
			OPERATOR FAILS TO RECOGNIZE NEED AND TO OPEN RNS MOV V023	5.00E-01	RHN-MAN05
142	7.35E-10	0	LOSS OF OFFSITE POWER INITIATING EVENT OCCURS WITH RCS DRAI	5.28E-03	IEV-LOSPD
			FAILURE TO RECOVER AC POWER IN 1 HOUR	4.20E-01	OTH-R1
			FIXED COMPONENTS FAILURE	3.17E-04	ED1MOD113
			FAILURE OF PMS OUTPUT LOGIC I/Os	2.09E-03	PMAMOD11
			OPERATOR FAILS TO RECOGNIZE NEED AND TO OPEN RNS MOV V023	5.00E-01	RHN-MAN05

Table 54-13 (Sheet 20 of 28)

SHUTDOWN PRA SENSITIVITY CASE 3

NUMBER	CUTSET PROB	PERCENTAGE	BASIC EVENT NAME	EVENT PROB.	IDENTIFIER
143	7.35E-10	0	LOSS OF OFFSITE POWER INITIATING EVENT OCCURS WITH RCS DRAI	5.28E-03	IEV-LOSPD
			FAILURE TO RECOVER AC POWER IN 1 HOUR	4.20E-01	OTH-R1
			FIXED COMPONENTS FAILURE	3.17E-04	ED1MOD11
			FAILURE OF PMS OUTPUT LOGIC I/Os	2.09E-03	PMAMOD11
			OPERATOR FAILS TO RECOGNIZE NEED AND TO OPEN RNS MOV V023	5.00E-01	RHN-MAN05
144	7.16E-10	0	LOSS OF OFFSITE POWER INITIATING EVENT OCCURS WITH RCS DRAI	5.28E-03	IEV-LOSPD
			FAILURE TO RECOVER AC POWER IN 1 HOUR	4.20E-01	OTH-R1
			PUMP 01B FAILS & ST CK V007B & C B FTC & RE FTC & CB ECS221 SPO	1.53E-02	RNBMOD07S
			D/G FAILS TO START & RUN OR BKR 102 FAILS TO CLOSE	2.02E-02	ZO1MOD01
			FAILURE OF PMS OUTPUT LOGIC I/Os	2.09E-03	PMAMOD11
			OPERATOR FAILS TO RECOGNIZE NEED AND TO OPEN RNS MOV V023	5.00E-01	RHN-MAN05
145	7.03E-10	0	LOSS OF OFFSITE POWER INITIATING EVENT OCCURS WITH RCS DRAI	5.28E-03	IEV-LOSPD
			FAILURE TO RECOVER AC POWER IN 1 HOUR	4.20E-01	OTH-R1
			CCF TO START OF ENGINE-DRIVEN FUEL PUMPS	2.00E-03	ZOX-PD-ES
			LOSS OF DIST. PANEL OR BREAKER A07 SPURIOUSLY OPENS	3.17E-04	IDAMOD04
			OPERATOR FAILS TO RECOGNIZE NEED AND TO OPEN RNS MOV V023	5.00E-01	RHN-MAN05
146	6.95E-10	0	LOSS OF OFFSITE POWER INITIATING EVENT OCCURS WITH RCS DRAI	5.28E-03	IEV-LOSPD
			FAILURE TO RECOVER AC POWER IN 1 HOUR	4.20E-01	OTH-R1
			PUMP MP 01B SEGMENT HARDWARE FAILURE OR DIVERTED FLOW	2.44E-02	SWBMOD02
			BREAKER 100 FAILS TO OPEN [#3	1.23E-02	EC1CB100VO
			FAILURE OF PMS OUTPUT LOGIC I/Os	2.09E-03	PMAMOD11
			OPERATOR FAILS TO RECOGNIZE NEED AND TO OPEN RNS MOV V023	5.00E-01	RHN-MAN05
147	6.87E-10	0	LOSS OF OFFSITE POWER INITIATING EVENT OCCURS WITH RCS DRAI	5.28E-03	IEV-LOSPD
			FAILURE TO RECOVER AC POWER IN 1 HOUR	4.20E-01	OTH-R1
			COMMON CAUSE FAILURE 4KV BREAKERS TO OPEN	1.20E-03	ECX-CB-GO
			FAILURE OF INV., STATIC SWITCH AND ASSOC. BREAKERS	5.16E-04	IDAMOD05
			OPERATOR FAILS TO RECOGNIZE NEED AND TO OPEN RNS MOV V023	5.00E-01	RHN-MAN05
148	6.69E-10	0	LOSS OF RNS WITH RCS DRAINED INITIATING EVENT OCCURS	9.69E-05	IEV-RNSD
			CCF OF LOGIC GROUP PROCESSING	1.38E-05	CCX-PMA030X
			OPERATOR FAILS TO RECOGNIZE NEED AND TO OPEN RNS MOV V023	5.00E-01	RHN-MAN05

Table 54-13 (Sheet 21 of 28)

SHUTDOWN PRA SENSITIVITY CASE 3

NUMBER	CUTSET PROB	PERCENTAGE	BASIC EVENT NAME	EVENT PROB.	IDENTIFIER
149	6.65E-10	0	LOSS OF OFFSITE POWER INITIATING EVENT OCCURS WITH RCS DRAI	5.28E-03	IEV-LOSPD
			FAILURE TO RECOVER AC POWER IN 1 HOUR	4.20E-01	OTH-R1
			CCF TO START OF ENGINE-DRIVEN FUEL PUMPS	2.00E-03	ZOX-PD-ES
			BUS UNAVAILABLE DUE TO TEST OR CORRECTIVE MAINTENANCE	3.00E-04	IDABSDS1TM
			OPERATOR FAILS TO RECOGNIZE NEED AND TO OPEN RNS MOV V023	5.00E-01	RHN-MAN05
150	6.49E-10	0	LOSS OF OFFSITE POWER INITIATING EVENT OCCURS WITH RCS DRAI	5.28E-03	IEV-LOSPD
			FAILURE TO RECOVER AC POWER IN 1 HOUR	4.20E-01	OTH-R1
			COMMON CAUSE FAILURE STANDBY DG TO START	2.80E-04	ZOX-DG-DS
			FAILURE OF PMS OUTPUT LOGIC I/Os	2.09E-03	PMAMOD11
			OPERATOR FAILS TO RECOGNIZE NEED AND TO OPEN RNS MOV V023	5.00E-01	RHN-MAN05
151	6.39E-10	0	OVERDRAINING OF RCS DURING DRAIN DOWN TO MID-LOOP INITIATING EV	2.13E-04	IEV-RCSOD
			OPERATOR FAILS TO ISOLATE RNS PIPE RUPTURE	5.00E-01	RHN-MAN04
			COND. PROB. OF IWN-MAN00 (OP. FAILS TO ACTUATE IRWST INJ)	5.00E-01	IWN-MAN00C
			FUSE DISCONNECT SWITCH (FD19) SPURIOUSLY OPENS	1.20E-05	IDDFD019RQ
152	6.39E-10	0	OVERDRAINING OF RCS DURING DRAIN DOWN TO MID-LOOP INITIATING EV	2.13E-04	IEV-RCSOD
			OPERATOR FAILS TO ISOLATE RNS PIPE RUPTURE	5.00E-01	RHN-MAN04
			COND. PROB. OF IWN-MAN00 (OP. FAILS TO ACTUATE IRWST INJ)	5.00E-01	IWN-MAN00C
			FUSE DISCONNECT SWITCH (FD20) SPURIOUSLY OPENS	1.20E-05	IDDFD020RQ
153	6.39E-10	0	OVERDRAINING OF RCS DURING DRAIN DOWN TO MID-LOOP INITIATING EV	2.13E-04	IEV-RCSOD
			RHN-MAN04-SUCC	5.00E-01	RHN-MAN04-SUCC
			OPERATOR FAILS TO ACTUATE IRWST INJECTION	5.00E-01	IWN-MAN00
			FUSE DISCONNECT SWITCH (FD19) SPURIOUSLY OPENS	1.20E-05	IDDFD019RQ
154	6.39E-10	0	OVERDRAINING OF RCS DURING DRAIN DOWN TO MID-LOOP INITIATING EV	2.13E-04	IEV-RCSOD
			RHN-MAN04-SUCC	5.00E-01	RHN-MAN04-SUCC
			OPERATOR FAILS TO ACTUATE IRWST INJECTION	5.00E-01	IWN-MAN00
			FUSE DISCONNECT SWITCH (FD20) SPURIOUSLY OPENS	1.20E-05	IDDFD020RQ
155	6.34E-10	0	LOSS OF OFFSITE POWER INITIATING EVENT OCCURS WITH RCS DRAI	5.28E-03	IEV-LOSPD
			FAILURE TO RECOVER AC POWER IN 1 HOUR	4.20E-01	OTH-R1
			PUMP MP 01B SEGMENT HARDWARE FAILURE OR DIVERTED FLOW	2.44E-02	SWBMOD02
			D/G FAILS TO START & RUN OR BKR 102 FAILS TO CLOSE	2.02E-02	ZO1MOD01
			FAILURE UPON DEMAND OF LOGIC GROUP PROCESSING	1.16E-03	PMA0301ASA
			OPERATOR FAILS TO RECOGNIZE NEED AND TO OPEN RNS MOV V023	5.00E-01	RHN-MAN05

Table 54-13 (Sheet 22 of 28)

SHUTDOWN PRA SENSITIVITY CASE 3

NUMBER	CUTSET PROB	PERCENTAGE	BASIC EVENT NAME	EVENT PROB.	IDENTIFIER
156	6.34E-10	0	LOSS OF OFFSITE POWER INITIATING EVENT OCCURS WITH RCS DRAI	5.28E-03	IEV-LOSPD
			FAILURE TO RECOVER AC POWER IN 1 HOUR	4.20E-01	OTH-R1
			PUMP MP 01B SEGMENT HARDWARE FAILURE OR DIVERTED FLOW	2.44E-02	SWBMOD02
			D/G FAILS TO START & RUN OR BKR 102 FAILS TO CLOSE	2.02E-02	ZO1MOD01
			FAILURE UPON DEMAND OF LOGIC GROUP PROCESSING	1.16E-03	PMA0301BSA
			OPERATOR FAILS TO RECOGNIZE NEED AND TO OPEN RNS MOV V023	5.00E-01	RHN-MAN05
157	6.31E-10	0	LOSS OF CCS/SWS WITH RCS DRAINED INITIATING EVENT OCCURS	7.16E-04	IEV-CCWD
			FAILURE OF PMS OUTPUT LOGIC I/Os	6.53E-04	PMAMOD11X
			BUS UNAVAILABLE DUE TO UNSCHEDULED MAINTENANCE	2.70E-03	EC1BS121TM
			OPERATOR FAILS TO RECOGNIZE NEED AND TO OPEN RNS MOV V023	5.00E-01	RHN-MAN05
158	6.31E-10	0	LOSS OF CCS/SWS WITH RCS DRAINED INITIATING EVENT OCCURS	7.16E-04	IEV-CCWD
			FAILURE OF PMS OUTPUT LOGIC I/Os	6.53E-04	PMAMOD11X
			UNAVAILABILITY OF BUS ECS ES 1 DUE TO UNSCHEDUL MAINTENANCE	2.70E-03	EC1BS001TM
			OPERATOR FAILS TO RECOGNIZE NEED AND TO OPEN RNS MOV V023	5.00E-01	RHN-MAN05
159	6.31E-10	0	LOSS OF CCS/SWS WITH RCS DRAINED INITIATING EVENT OCCURS	7.16E-04	IEV-CCWD
			FAILURE OF PMS OUTPUT LOGIC I/Os	6.53E-04	PMAMOD11X
			BUS UNAVAILABLE DUE TO UNSCHEDULED MAINTENANCE	2.70E-03	EC1BS012TM
			OPERATOR FAILS TO RECOGNIZE NEED AND TO OPEN RNS MOV V023	5.00E-01	RHN-MAN05
160	6.27E-10	0	LOSS OF RNS WITH RCS DRAINED INITIATING EVENT OCCURS	9.69E-05	IEV-RNSD
			CCF OF INPUT LOGIC GROUPS	2.59E-05	CCX-INPUT-LOGICX
			OPERATOR FAILS TO ACTUATE IRWST INJECTION	5.00E-01	IWN-MAN00
			COND. PROB. OF RHN-MAN05 (OP. FAILS TO OPEN RNS MOV V023)	5.00E-01	RHN-MAN05C
161	6.12E-10	0	LOSS OF RNS WITH RCS FILLED INITIATING EVENT OCCURS	1.02E-03	IEV-RNSND
			SOFTWARE CCF OF ALL CARDS	1.20E-06	CCX-SFTW
			FAILURE OF MANUAL DAS ACTUATION	5.00E-01	REC-MANDAS
162	6.02E-10	0	LOSS OF OFFSITE POWER INITIATING EVENT OCCURS WITH RCS DRAI	5.28E-03	IEV-LOSPD
			FAILURE TO RECOVER AC POWER IN 1 HOUR	4.20E-01	OTH-R1
			BATTERY DB1 UNAVAILABLE	2.70E-03	ED1MOD03
			IWX-XMTR	2.01E-04	IWX-XMTR
			REN-MAN04	5.00E-01	REN-MAN04

Table 54-13 (Sheet 23 of 28)

SHUTDOWN PRA SENSITIVITY CASE 3

NUMBER	CUTSET PROB	PERCENTAGE	BASIC EVENT NAME	EVENT PROB.	IDENTIFIER
163	5.86E-10	0	OVERDRAINING OF RCS DURING DRAIN DOWN TO MID-LOOP INITIATING EV	2.13E-04	IEV-RCSOD
			RHN-MAN04-SUCC	5.00E-01	RHN-MAN04-SUCC
			SOFTWARE CCF OF OUTPUT LOGIC I/Os	1.10E-05	CCX-PMAMOD1-SW
			OPERATOR FAILS TO RECOGNIZE NEED AND TO OPEN RNS MOV V023	5.00E-01	RHN-MAN05
164	5.86E-10	0	OVERDRAINING OF RCS DURING DRAIN DOWN TO MID-LOOP INITIATING EV	2.13E-04	IEV-RCSOD
			OPERATOR FAILS TO ISOLATE RNS PIPE RUPTURE	5.00E-01	RHN-MAN04
			COND. PROB. OF IWN-MAN00 (OP. FAILS TO ACTUATE IRWST INJ)	5.00E-01	IWN-MAN00C
			CCX-PMDMOD4-SW	1.10E-05	CCX-PMDMOD4-SW
165	5.86E-10	0	OVERDRAINING OF RCS DURING DRAIN DOWN TO MID-LOOP INITIATING EV	2.13E-04	IEV-RCSOD
			RHN-MAN04-SUCC	5.00E-01	RHN-MAN04-SUCC
			OPERATOR FAILS TO ACTUATE IRWST INJECTION	5.00E-01	IWN-MAN00
			CCX-PMDMOD4-SW	1.10E-05	CCX-PMDMOD4-SW
166	5.86E-10	0	OVERDRAINING OF RCS DURING DRAIN DOWN TO MID-LOOP INITIATING EV	2.13E-04	IEV-RCSOD
			RHN-MAN04-SUCC	5.00E-01	RHN-MAN04-SUCC
			CCF OF SOFTWARE FOR MUX LOGIC GROUPS	1.10E-05	CCX-PMAMOD4-SW
			OPERATOR FAILS TO RECOGNIZE NEED AND TO OPEN RNS MOV V023	5.00E-01	RHN-MAN05
167	5.86E-10	0	OVERDRAINING OF RCS DURING DRAIN DOWN TO MID-LOOP INITIATING EV	2.13E-04	IEV-RCSOD
			OPERATOR FAILS TO ISOLATE RNS PIPE RUPTURE	5.00E-01	RHN-MAN04
			COND. PROB. OF IWN-MAN00 (OP. FAILS TO ACTUATE IRWST INJ)	5.00E-01	IWN-MAN00C
			CCX-PMDMOD1-SW	1.10E-05	CCX-PMDMOD1-SW
168	5.86E-10	0	OVERDRAINING OF RCS DURING DRAIN DOWN TO MID-LOOP INITIATING EV	2.13E-04	IEV-RCSOD
			OPERATOR FAILS TO ISOLATE RNS PIPE RUPTURE	5.00E-01	RHN-MAN04
			CCF OF SOFTWARE FOR MUX LOGIC GROUPS	1.10E-05	CCX-PMAMOD4-SW
			OPERATOR FAILS TO RECOGNIZE NEED AND TO OPEN RNS MOV V023	5.00E-01	RHN-MAN05
169	5.86E-10	0	OVERDRAINING OF RCS DURING DRAIN DOWN TO MID-LOOP INITIATING EV	2.13E-04	IEV-RCSOD
			OPERATOR FAILS TO ISOLATE RNS PIPE RUPTURE	5.00E-01	RHN-MAN04
			SOFTWARE CCF OF OUTPUT LOGIC I/Os	1.10E-05	CCX-PMAMOD1-SW
			OPERATOR FAILS TO RECOGNIZE NEED AND TO OPEN RNS MOV V023	5.00E-01	RHN-MAN05
170	5.86E-10	0	OVERDRAINING OF RCS DURING DRAIN DOWN TO MID-LOOP INITIATING EV	2.13E-04	IEV-RCSOD
			RHN-MAN04-SUCC	5.00E-01	RHN-MAN04-SUCC
			OPERATOR FAILS TO ACTUATE IRWST INJECTION	5.00E-01	IWN-MAN00
			CCX-PMDMOD1-SW	1.10E-05	CCX-PMDMOD1-SW

Table 54-13 (Sheet 24 of 28)

SHUTDOWN PRA SENSITIVITY CASE 3

NUMBER	CUTSET PROB	PERCENTAGE	BASIC EVENT NAME	EVENT PROB.	IDENTIFIER
171	5.76E-10	0	LOSS OF OFFSITE POWER INITIATING EVENT OCCURS WITH RCS DRAI	5.28E-03	IEV-LOSPD
			FAILURE TO RECOVER AC POWER IN 1 HOUR	4.20E-01	OTH-R1
			BREAKER 100 FAILS TO OPEN [#3	1.23E-02	EC1CB100VO
			D/G FAILS TO START & RUN OR BKR 202 FAILS TO CLOSE	2.02E-02	ZO2MOD01
			FAILURE OF PMS OUTPUT LOGIC I/Os	2.09E-03	PMAMOD11
			OPERATOR FAILS TO RECOGNIZE NEED AND TO OPEN RNS MOV V023	5.00E-01	RHN-MAN05
172	5.76E-10	0	LOSS OF OFFSITE POWER INITIATING EVENT OCCURS WITH RCS DRAI	5.28E-03	IEV-LOSPD
			FAILURE TO RECOVER AC POWER IN 1 HOUR	4.20E-01	OTH-R1
			D/G FAILS TO START & RUN OR BKR 102 FAILS TO CLOSE	2.02E-02	ZO1MOD01
			BREAKER 200 FAILS TO OPEN [#5	1.23E-02	EC2CB200VO
			FAILURE OF PMS OUTPUT LOGIC I/Os	2.09E-03	PMAMOD11
			OPERATOR FAILS TO RECOGNIZE NEED AND TO OPEN RNS MOV V023	5.00E-01	RHN-MAN05
173	5.66E-10	0	LOSS OF OFFSITE POWER INITIATING EVENT OCCURS WITH RCS DRAI	5.28E-03	IEV-LOSPD
			FAILURE TO RECOVER AC POWER IN 1 HOUR	4.20E-01	OTH-R1
			COMMON CAUSE FAILURE STANDBY DG TO RUN	4.40E-04	ZOX-DG-DR
			FAILURE UPON DEMAND OF LOGIC GROUP PROCESSING	1.16E-03	PMA0301BSA
			OPERATOR FAILS TO RECOGNIZE NEED AND TO OPEN RNS MOV V023	5.00E-01	RHN-MAN05
174	5.66E-10	0	LOSS OF OFFSITE POWER INITIATING EVENT OCCURS WITH RCS DRAI	5.28E-03	IEV-LOSPD
			FAILURE TO RECOVER AC POWER IN 1 HOUR	4.20E-01	OTH-R1
			COMMON CAUSE FAILURE STANDBY DG TO RUN	4.40E-04	ZOX-DG-DR
			FAILURE UPON DEMAND OF LOGIC GROUP PROCESSING	1.16E-03	PMA0301ASA
			OPERATOR FAILS TO RECOGNIZE NEED AND TO OPEN RNS MOV V023	5.00E-01	RHN-MAN05
175	5.64E-10	0	LOCA/RNS PIPE RUPTURE WITH RCS FILLED INIT. EVENT OCCURS	1.61E-05	IEV-LOCAPRND
			OPERATOR FAILS TO ISOLATE RNS PIPE RUPTURE	5.00E-01	RHN-MAN04
			CCF OF ORIFICES	2.77E-04	CCX-ORY-SP
			COND. PROB. OF REC-MANDAS (FAILURE OF MANUAL DAS ACTUATI	5.06E-01	REC-MANDASC
			ADN-MAN01C	5.00E-01	ADN-MAN01C

Table 54-13 (Sheet 25 of 28)

SHUTDOWN PRA SENSITIVITY CASE 3

NUMBER	CUTSET PROB	PERCENTAGE	BASIC EVENT NAME	EVENT PROB.	IDENTIFIER
176	5.61E-10	0	LOSS OF CCS/SWS WITH RCS DRAINED INITIATING EVENT OCCURS	7.16E-04	IEV-CCWD
			PMAMOD21X	1.16E-03	PMAMOD21X
			OPERATOR FAILS TO ACTUATE IRWST INJECTION	5.00E-01	IWN-MAN00
			BUS UNAVAILABLE DUE TO UNSCHEDULED MAINTENANCE	2.70E-03	EC1BS012TM
			COND. PROB. OF RHN-MAN05 (OP. FAILS TO OPEN RNS MOV V023)	5.00E-01	RHN-MAN05C
177	5.61E-10	0	LOSS OF CCS/SWS WITH RCS DRAINED INITIATING EVENT OCCURS	7.16E-04	IEV-CCWD
			PMAMOD21X	1.16E-03	PMAMOD21X
			OPERATOR FAILS TO ACTUATE IRWST INJECTION	5.00E-01	IWN-MAN00
			BUS UNAVAILABLE DUE TO UNSCHEDULED MAINTENANCE	2.70E-03	EC1BS121TM
			COND. PROB. OF RHN-MAN05 (OP. FAILS TO OPEN RNS MOV V023)	5.00E-01	RHN-MAN05C
178	5.61E-10	0	LOSS OF CCS/SWS WITH RCS DRAINED INITIATING EVENT OCCURS	7.16E-04	IEV-CCWD
			PMAMOD21X	1.16E-03	PMAMOD21X
			OPERATOR FAILS TO ACTUATE IRWST INJECTION	5.00E-01	IWN-MAN00
			UNAVAILABILITY OF BUS ECS ES 1 DUE TO UNSCHEDUL MAINTENANCE	2.70E-03	EC1BS001TM
			COND. PROB. OF RHN-MAN05 (OP. FAILS TO OPEN RNS MOV V023)	5.00E-01	RHN-MAN05C
179	5.33E-10	0	LOSS OF RNS WITH RCS DRAINED INITIATING EVENT OCCURS	9.69E-05	IEV-RNSD
			SOFTWARE CCF OF OUTPUT LOGIC I/Os	1.10E-05	CCX-PMAMOD1-SW
			OPERATOR FAILS TO RECOGNIZE NEED AND TO OPEN RNS MOV V023	5.00E-01	RHN-MAN05
180	5.25E-10	0	LOSS OF RNS WITH RCS FILLED INITIATING EVENT OCCURS	1.02E-03	IEV-RNSND
			FAILURE OF MANUAL DAS REACTOR TRIP HARDWARE	1.00E-02	MDAS
			COMMON MODE FAILURE OF INPUT LOGIC GROUPS	1.03E-04	CCX-INPUT-LOGIC
			OPERATOR FAILS TO RECOGNIZE THE NEED FOR RCS DEPRESSURIZAT	5.00E-01	LPM-MAN05
181	5.25E-10	0	LOSS OF OFFSITE POWER INITIATING EVENT OCCURS WITH RCS DRAI	5.28E-03	IEV-LOSPD
			FAILURE TO RECOVER AC POWER IN 1 HOUR	4.20E-01	OTH-R1
			D/G FAILS TO START & RUN OR BKR 102 FAILS TO CLOSE	2.02E-02	ZO1MOD01
			D/G FAILS TO START & RUN OR BKR 202 FAILS TO CLOSE	2.02E-02	ZO2MOD01
			FAILURE UPON DEMAND OF LOGIC GROUP PROCESSING	1.16E-03	PMA0301BSA
			OPERATOR FAILS TO RECOGNIZE NEED AND TO OPEN RNS MOV V023	5.00E-01	RHN-MAN05

Table 54-13 (Sheet 26 of 28)

SHUTDOWN PRA SENSITIVITY CASE 3

NUMBER	CUTSET PROB	PERCENTAGE	BASIC EVENT NAME	EVENT PROB.	IDENTIFIER
182	5.25E-10	0	LOSS OF OFFSITE POWER INITIATING EVENT OCCURS WITH RCS DRAI	5.28E-03	IEV-LOSPD
			FAILURE TO RECOVER AC POWER IN 1 HOUR	4.20E-01	OTH-R1
			D/G FAILS TO START & RUN OR BKR 102 FAILS TO CLOSE	2.02E-02	ZO1MOD01
			D/G FAILS TO START & RUN OR BKR 202 FAILS TO CLOSE	2.02E-02	ZO2MOD01
			FAILURE UPON DEMAND OF LOGIC GROUP PROCESSING	1.16E-03	PMA0301ASA
			OPERATOR FAILS TO RECOGNIZE NEED AND TO OPEN RNS MOV V023	5.00E-01	RHN-MAN05
183	5.19E-10	0	LOCA/RNS-V024 OPENS INITIATING EVENT OCCURS WITH RCS FILL	1.73E-05	IEV-LOCA24ND
			CCF OF ADS 4TH STAGE SQUIB VALVES TO OPEN	3.00E-05	ADX-EV-SA
184	5.19E-10	0	LOCA/RNS-V024 OPENS INITIATING EVENT OCCURS WITH RCS FILL	1.73E-05	IEV-LOCA24ND
			CCF OF GRAVITY INJECTION CHECK VALVES TO OPEN	3.00E-05	IWX-CV-AO
185	5.16E-10	0	LOSS OF CCS/SWS WITH RCS DRAINED INITIATING EVENT OCCURS	7.16E-04	IEV-CCWD
			MECHANICAL FAILURE CAUSES MOV 121A TO FAIL-TO-OPEN	3.00E-03	IRWMOD05S
			IRWST DISCHARGE LINE "B" STRAINER PLUGGED	2.40E-04	IWB-PLUG
186	4.99E-10	0	LOSS OF CCS/SWS WITH RCS DRAINED INITIATING EVENT OCCURS	7.16E-04	IEV-CCWD
			FAILURE OF INV., STATIC SWITCH AND ASSOC. BREAKERS	5.16E-04	IDAMOD05
			UNAVAILABILITY OF BUS ECS ES 1 DUE TO UNSCHEDUL MAINTENANCE	2.70E-03	EC1BS001TM
			OPERATOR FAILS TO RECOGNIZE NEED AND TO OPEN RNS MOV V023	5.00E-01	RHN-MAN05
187	4.99E-10	0	LOSS OF CCS/SWS WITH RCS DRAINED INITIATING EVENT OCCURS	7.16E-04	IEV-CCWD
			FAILURE OF INV., STATIC SWITCH AND ASSOC. BREAKERS	5.16E-04	IDAMOD05
			BUS UNAVAILABLE DUE TO UNSCHEDULED MAINTENANCE	2.70E-03	EC1BS121TM
			OPERATOR FAILS TO RECOGNIZE NEED AND TO OPEN RNS MOV V023	5.00E-01	RHN-MAN05
188	4.99E-10	0	LOSS OF CCS/SWS WITH RCS DRAINED INITIATING EVENT OCCURS	7.16E-04	IEV-CCWD
			FAILURE OF INV., STATIC SWITCH AND ASSOC. BREAKERS	5.16E-04	IDAMOD05
			BUS UNAVAILABLE DUE TO UNSCHEDULED MAINTENANCE	2.70E-03	EC1BS012TM
			OPERATOR FAILS TO RECOGNIZE NEED AND TO OPEN RNS MOV V023	5.00E-01	RHN-MAN05
189	4.87E-10	0	LOSS OF OFFSITE POWER INITIATING EVENT OCCURS WITH RCS DRAI	5.28E-03	IEV-LOSPD
			FAILURE TO RECOVER AC POWER IN 1 HOUR	4.20E-01	OTH-R1
			PUMP SUBLOOP B HARDWARE FAILURE OR DIVERTED FLOW	1.04E-02	CCBMOD01S
			D/G FAILS TO START & RUN OR BKR 102 FAILS TO CLOSE	2.02E-02	ZO1MOD01
			FAILURE OF PMS OUTPUT LOGIC I/Os	2.09E-03	PMAMOD11
			OPERATOR FAILS TO RECOGNIZE NEED AND TO OPEN RNS MOV V023	5.00E-01	RHN-MAN05

Table 54-13 (Sheet 27 of 28)

SHUTDOWN PRA SENSITIVITY CASE 3

NUMBER	CUTSET PROB	PERCENTAGE	BASIC EVENT NAME	EVENT PROB.	IDENTIFIER
190	4.66E-10	0	LOSS OF OFFSITE POWER INITIATING EVENT OCCURS WITH RCS DRAI	5.28E-03	IEV-LOSPD
			FAILURE TO RECOVER AC POWER IN 1 HOUR	4.20E-01	OTH-R1
			FAILURE OF PLS OUTPUT LOGIC I/Os	2.09E-03	PL5MOD11
			IWX-XMTR	2.01E-04	IWX-XMTR
			REN-MAN04	5.00E-01	REN-MAN04
191	4.59E-10	0	OVERDRAINING OF RCS DURING DRAIN DOWN TO MID-LOOP INITIATING EV	2.13E-04	IEV-RCSOD
			OPERATOR FAILS TO ISOLATE RNS PIPE RUPTURE	5.00E-01	RHN-MAN04
			COND. PROB. OF IWN-MAN00 (OP. FAILS TO ACTUATE IRWST INJ)	5.00E-01	IWN-MAN00C
			CCF OF THE POWER INTERFACE OUTPUT BOARDS IN PMS	8.62E-06	CCX-EP-SAM
192	4.59E-10	0	OVERDRAINING OF RCS DURING DRAIN DOWN TO MID-LOOP INITIATING EV	2.13E-04	IEV-RCSOD
			OPERATOR FAILS TO ISOLATE RNS PIPE RUPTURE	5.00E-01	RHN-MAN04
			FAILURE OF MANUAL DAS ACTUATION	5.00E-01	REC-MANDAS
			CCF OF THE POWER INTERFACE OUTPUT BOARDS IN PMS	8.62E-06	CCX-EP-SAM
193	4.59E-10	0	OVERDRAINING OF RCS DURING DRAIN DOWN TO MID-LOOP INITIATING EV	2.13E-04	IEV-RCSOD
			RHN-MAN04-SUCC	5.00E-01	RHN-MAN04-SUCC
			FAILURE OF MANUAL DAS ACTUATION	5.00E-01	REC-MANDAS
			CCF OF THE POWER INTERFACE OUTPUT BOARDS IN PMS	8.62E-06	CCX-EP-SAM
194	4.59E-10	0	OVERDRAINING OF RCS DURING DRAIN DOWN TO MID-LOOP INITIATING EV	2.13E-04	IEV-RCSOD
			RHN-MAN04-SUCC	5.00E-01	RHN-MAN04-SUCC
			OPERATOR FAILS TO ACTUATE IRWST INJECTION	5.00E-01	IWN-MAN00
			CCF OF THE POWER INTERFACE OUTPUT BOARDS IN PMS	8.62E-06	CCX-EP-SAM
195	4.51E-10	0	LOCA/RNS-V024 OPENS INITIATING EVENT OCCURS WITH RCS FILL	1.73E-05	IEV-LOCA24ND
			COND. PROB. OF REC-MANDAS (FAILURE OF MANUAL DAS ACTUATI	5.06E-01	REC-MANDASC
			COMMON MODE FAILURE OF INPUT LOGIC GROUPS	1.03E-04	CCX-INPUT-LOGIC
			OPERATOR FAILS TO ACTUATE ADS BEFORE CORE DAMAGE	5.00E-01	ADN-MAN01
196	4.51E-10	0	LOCA/RNS-V024 OPENS INITIATING EVENT OCCURS WITH RCS FILL	1.73E-05	IEV-LOCA24ND
			COND. PROB. OF REC-MANDAS (FAILURE OF MANUAL DAS ACTUATI	5.06E-01	REC-MANDASC
			COMMON MODE FAILURE OF INPUT LOGIC GROUPS	1.03E-04	CCX-INPUT-LOGIC
			OPERATOR FAILS TO RECOGNIZE THE NEED FOR RCS DEPRESSURIZAT	5.00E-01	LPM-MAN05

Table 54-13 (Sheet 28 of 28)

SHUTDOWN PRA SENSITIVITY CASE 3

NUMBER	CUTSET PROB	PERCENTAGE	BASIC EVENT NAME	EVENT PROB.	IDENTIFIER
197	4.50E-10	0	LOCA/RNS-V024 OPENS INITIATING EVENT OCCURS WITH RCS FILL	1.73E-05	IEV-LOCA24ND
			IWX-EV4-SA	2.60E-05	IWX-EV4-SA
198	4.46E-10	0	LOSS OF OFFSITE POWER INITIATING EVENT OCCURS WITH RCS DRAI	5.28E-03	IEV-LOSPD
			FAILURE TO RECOVER AC POWER IN 1 HOUR	4.20E-01	OTH-R1
			CCF TO START OF ENGINE-DRIVEN FUEL PUMPS	2.00E-03	ZOX-PD-ES
			IWX-XMTR	2.01E-04	IWX-XMTR
			REN-MAN04	5.00E-01	REN-MAN04
199	4.36E-10	0	LOSS OF OFFSITE POWER INITIATING EVENT OCCURS WITH RCS DRAI	5.28E-03	IEV-LOSPD
			FAILURE TO RECOVER AC POWER IN 1 HOUR	4.20E-01	OTH-R1
			PUMP 01B FAILS & ST CK V007B & C B FTC & RE FTC & CB ECS221 SPO	1.53E-02	RNBMOD07S
			BREAKER 100 FAILS TO OPEN [#3	1.23E-02	EC1CB100VO
			FAILURE OF PMS OUTPUT LOGIC I/Os	2.09E-03	PMAMOD11
			OPERATOR FAILS TO RECOGNIZE NEED AND TO OPEN RNS MOV V023	5.00E-01	RHN-MAN05
200	4.22E-10	0	LOSS OF OFFSITE POWER INITIATING EVENT OCCURS WITH RCS DRAI	5.28E-03	IEV-LOSPD
			FAILURE TO RECOVER AC POWER IN 1 HOUR	4.20E-01	OTH-R1
			BATTERY DB1 UNAVAILABLE	2.70E-03	ED1MOD03
			CCF OF OUTPUT LOGIC I/O BOARDS	1.41E-04	CCX-PMAMOD1
			OPERATOR FAILS TO RECOGNIZE NEED AND TO OPEN RNS MOV V023	5.00E-01	RHN-MAN05

Table 54-14

BASIC EVENTS WHOSE PROBABILITIES ARE CHANGED IN CASE 3

		Base	Changed	
17	ADN-MAN01	4.93E-04	5.00E-01	
18	ADN-MAN01C	5.00E-02	5.00E-01	
26	CCB-MAN01	1.07E-03	5.00E-01	
206	IWN-MAN00	1.15E-03	5.00E-01	
207	IWN-MAN00C	5.00E-02	5.00E-01	
215	LPM-MAN05	6.83E-04	5.00E-01	
285	PRN-MAN01	4.08E-04	5.00E-01	
296	REC-MANDAS	1.16E-02	5.00E-01	
297	REC-MANDASC	5.06E-01	5.06E-01	
298	REN-MAN04	1.00E-02	5.00E-01	
300	RHN-MAN03	2.26E-03	5.00E-01	
301	RHN-MAN04	5.50E-02	5.00E-01	
302	RHN-MAN04-SUCC	9.45E-01	5.00E-01	
303	RHN-MAN05	1.60E-03	5.00E-01	
304	RHN-MAN05C	1.50E-01	5.00E-01	
323	SWB-MAN02	1.60E-03	5.00E-01	
337	ZON-MAN01	2.67E-03	5.00E-01	
176	IEV-RCSOD	5.28E-06	2.13E-04	
	RCS-MANODS1	4.04E-04	0.5	
	RCS-MANODS2	1.39E-02	0.5	

These two HEPs are used in calculation of IEV-RCSOD Frequency.

IEV-RCSOD (AP1000) = (1.07/0.9) * IEV-RCSOD(AP600)

	Base Case	HEP = 0.5
IEV-RCSOD(AP600) = 0.9*(SC-1 + SC-2)		
SC -1 = 2.91E-04 * RCS-MANOD1S =	1.18E-07	1.46E-04
SC -2 = 3.43E-06 + 1.0E-04 * RCS-MANOD2S =	4.82E-06	5.34E-05
IEV-RCSOD(AP600) =	4.44E-06	1.79E-04
IEV-RCSOD (AP1000) =	5.28E-06	2.13E-04

Table 54-15 (Sheet 1 of 7)

AP1000 SHUTDOWN PRA SENSITIVITY CASE 4 CDF CUTSETS

NUMBER	CUTSET PROB	PERCENT	BASIC EVENT NAME	EVENT PROB.	IDENTIFIER
1	1.04E-07	10.69	LOSS OF OFFSITE POWER INITIATING EVENT OCCURS WITH RCS DRAINED	5.28E-03	IEV-LOSPD
			FAILURE TO RECOVER AC POWER IN 1 HOUR	4.20E-01	OTH-R1
			COMMON CAUSE FAILURE OF THE BATTERIES IDSA-DB-1A/1B	4.70E-05	CCX-BY-PN
2	9.19E-08	9.44	LOSS OF OFFSITE POWER INITIATING EVENT OCCURS WITH RCS DRAINED	5.28E-03	IEV-LOSPD
			OFFSITE AC POWER RECOVERED IN 1 HOUR	5.80E-01	SUC-R1S
			CCF OF ADS 4TH S AGE SQUIB VALVES TO OPEN	3.00E-05	ADX-EV-SA
3	7.96E-08	8.18	LOSS OF OFFSITE POWER INITIATING EVENT OCCURS WITH RCS DRAINED	5.28E-03	IEV-LOSPD
			OFFSITE AC POWER RECOVERED IN 1 HOUR	5.80E-01	SUC-R1S
			IWX-EV4-SA	2.60E-05	IWX-EV4-SA
4	7.96E-08	8.18	LOSS OF OFFSITE POWER INITIATING EVENT OCCURS WITH RCS DRAINED	5.28E-03	IEV-LOSPD
			OFFSITE AC POWER RECOVERED IN 1 HOUR	5.80E-01	SUC-R1S
			IWX-MV-GO1	2.60E-05	IWX-MV-GO1
5	6.65E-08	6.83	LOSS OF OFFSITE POWER INITIATING EVENT OCCURS WITH RCS DRAINED	5.28E-03	IEV-LOSPD
			FAILURE TO RECOVER AC POWER IN 1 HOUR	4.20E-01	OTH-R1
			CCF OF ADS 4TH S AGE SQUIB VALVES TO OPEN	3.00E-05	ADX-EV-SA
6	5.77E-08	5.93	LOSS OF OFFSITE POWER INITIATING EVENT OCCURS WITH RCS DRAINED	5.28E-03	IEV-LOSPD
			FAILURE TO RECOVER AC POWER IN 1 HOUR	4.20E-01	OTH-R1
			IWX-MV-GO1	2.60E-05	IWX-MV-GO1
7	5.77E-08	5.93	LOSS OF OFFSITE POWER INITIATING EVENT OCCURS WITH RCS DRAINED	5.28E-03	IEV-LOSPD
			FAILURE TO RECOVER AC POWER IN 1 HOUR	4.20E-01	OTH-R1
			IWX-EV4-SA	2.60E-05	IWX-EV4-SA
8	5.32E-08	5.47	LOSS OF OFFSITE POWER INITIATING EVENT OCCURS WITH RCS DRAINED	5.28E-03	IEV-LOSPD
			FAILURE TO RECOVER AC POWER IN 1 HOUR	4.20E-01	OTH-R1
			COMMON CAUSE FAILURE OF THE INVERTER	2.40E-05	CCX-IV-XR
9	3.67E-08	3.77	LOSS OF OFFSITE POWER INITIATING EVENT OCCURS WITH RCS DRAINED	5.28E-03	IEV-LOSPD
			OFFSITE AC POWER RECOVERED IN 1 HOUR	5.80E-01	SUC-R1S
			REX-FL-GP	1.20E-05	REX-FL-GP

Table 54-15 (Sheet 2 of 7)

AP1000 SHUTDOWN PRA SENSITIVITY CASE 4 CDF CUTSETS

NUMBER	CUTSET PROB	PERCENT	BASIC EVENT NAME	EVENT PROB.	IDENTIFIER
10	3.67E-08	3.77	LOSS OF OFFSITE POWER INITIATING EVENT OCCURS WITH RCS DRAINED	5.28E-03	IEV-LOSPD
			OFFSITE AC POWER RECOVERED IN 1 HOUR	5.80E-01	SUC-R1S
			CCF OF STRAINERS IN IRWST TANK	1.20E-05	IWX-FL-GP
11	2.66E-08	2.73	LOSS OF OFFSITE POWER INITIATING EVENT OCCURS WITH RCS DRAINED	5.28E-03	IEV-LOSPD
			FAILURE TO RECOVER AC POWER IN 1 HOUR	4.20E-01	OTH-R1
			REX-FL-GP	1.20E-05	REX-FL-GP
12	2.66E-08	2.73	LOSS OF OFFSITE POWER INITIATING EVENT OCCURS WITH RCS DRAINED	5.28E-03	IEV-LOSPD
			FAILURE TO RECOVER AC POWER IN 1 HOUR	4.20E-01	OTH-R1
			CCF OF STRAINERS IN IRWST TANK	1.20E-05	IWX-FL-GP
13	2.15E-08	2.21	LOSS OF CCS/SWS WITH RCS DRAINED INITIATING EVENT OCCURS	7.16E-04	IEV-CCWD
			CCF OF ADS 4TH S AGE SQUIB VALVES TO OPEN	3.00E-05	ADX-EV-SA
14	1.91E-08	1.96	LOSS OF OFFSITE POWER INITIATING EVENT OCCURS WITH RCS DRAINED	5.28E-03	IEV-LOSPD
			FAILURE TO RECOVER AC POWER IN 1 HOUR	4.20E-01	OTH-R1
			CCF OF THE POWER INTERFACE OUTPUT BOARDS IN PMS	8.62E-06	CCX-EP-SAM
15	1.86E-08	1.91	LOSS OF CCS/SWS WITH RCS DRAINED INITIATING EVENT OCCURS	7.16E-04	IEV-CCWD
			IWX-MV-GO1	2.60E-05	IWX-MV-GO1
16	1.86E-08	1.91	LOSS OF CCS/SWS WITH RCS DRAINED INITIATING EVENT OCCURS	7.16E-04	IEV-CCWD
			IWX-EV4-SA	2.60E-05	IWX-EV4-SA
17	1.11E-08	1.14	LOSS OF OFFSITE POWER INITIATING EVENT OCCURS WITH RCS DRAINED	5.28E-03	IEV-LOSPD
			OFFSITE AC POWER RECOVERED IN 1 HOUR	5.80E-01	SUC-R1S
			CCF OF ORIFICES	3.63E-06	CCX-ORY-SPX
18	1.02E-08	1.05	LOSS OF OFFSITE POWER INITIATING EVENT OCCURS WITH RCS DRAINED	5.28E-03	IEV-LOSPD
			FAILURE TO RECOVER AC POWER IN 1 HOUR	4.20E-01	OTH-R1
			FAILURE OF PMS OUTPUT LOGIC I/Os	2.09E-03	PMAMOD11
			MECHANICAL FAILURE CAUSES MOV 023 TO FAIL-TO-OPEN	2.21E-03	RN23MOD5S

Table 54-15 (Sheet 3 of 7)

AP1000 SHUTDOWN PRA SENSITIVITY CASE 4 CDF CUTSETS

NUMBER	CUTSET PROB	PERCENT	BASIC EVENT NAME	EVENT PROB.	IDENTIFIER
19	8.59E-09	0.88	LOSS OF CCS/SWS WITH RCS DRAINED INITIATING EVENT OCCURS	7.16E-04	IEV-CCWD
			CCF OF STRAINERS IN IRWST TANK	1.20E-05	IWX-FL-GP
20	8.59E-09	0.88	LOSS OF CCS/SWS WITH RCS DRAINED INITIATING EVENT OCCURS	7.16E-04	IEV-CCWD
			REX-FL-GP	1.20E-05	REX-FL-GP
21	8.05E-09	0.83	LOSS OF OFFSITE POWER INITIATING EVENT OCCURS WITH RCS DRAINED	5.28E-03	IEV-LOSPD
			OFFSITE AC POWER RECOVERED IN 1 HOUR	5.80E-01	SUC-R1S
			CCF OF PRESSURE TRANSMITTERS	2.63E-06	CCX-XMTRX
22	8.05E-09	0.83	LOSS OF OFFSITE POWER INITIATING EVENT OCCURS WITH RCS DRAINED	5.28E-03	IEV-LOSPD
			FAILURE TO RECOVER AC POWER IN 1 HOUR	4.20E-01	OTH-R1
			CCF OF ORIFICES	3.63E-06	CCX-ORY-SPX
23	7.42E-09	0.76	LOSS OF OFFSITE POWER INITIATING EVENT OCCURS WITH RCS DRAINED	5.28E-03	IEV-LOSPD
			FAILURE TO RECOVER AC POWER IN 1 HOUR	4.20E-01	OTH-R1
			FAILURE OF PMS OUTPUT LOGIC I/Os	2.09E-03	PMAMOD11
			OPERATOR FAILS TO RECOGNIZE NEED AND TO OPEN RNS MOV V023	1.60E-03	RHN-MAN05
24	6.16E-09	0.63	LOSS OF OFFSITE POWER INITIATING EVENT OCCURS WITH RCS DRAINED	5.28E-03	IEV-LOSPD
			OFFSITE AC POWER RECOVERED IN 1 HOUR	5.80E-01	SUC-R1S
			IWX-XMTR	2.01E-04	IWX-XMTR
			REN-MAN04	1.00E-02	REN-MAN04
25	5.83E-09	0.6	LOSS OF OFFSITE POWER INITIATING EVENT OCCURS WITH RCS DRAINED	5.28E-03	IEV-LOSPD
			FAILURE TO RECOVER AC POWER IN 1 HOUR	4.20E-01	OTH-R1
			CCF OF PRESSURE TRANSMITTERS	2.63E-06	CCX-XMTRX
26	5.69E-09	0.58	LOSS OF OFFSITE POWER INITIATING EVENT OCCURS WITH RCS DRAINED	5.28E-03	IEV-LOSPD
			FAILURE TO RECOVER AC POWER IN 1 HOUR	4.20E-01	OTH-R1
			FAILURE UPON DEMAND OF LOGIC GROUP PROCESSING	1.16E-03	PMA0301ASA
			MECHANICAL FAILURE CAUSES MOV 023 TO FAIL-TO-OPEN	2.21E-03	RN23MOD5S

Table 54-15 (Sheet 4 of 7)

AP1000 SHUTDOWN PRA SENSITIVITY CASE 4 CDF CUTSETS

NUMBER	CUTSET PROB	PERCENT	BASIC EVENT NAME	EVENT PROB.	IDENTIFIER
27	5.69E-09	0.58	LOSS OF OFFSITE POWER INITIATING EVENT OCCURS WITH RCS DRAINED	5.28E-03	IEV-LOSPD
			FAILURE TO RECOVER AC POWER IN 1 HOUR	4.20E-01	OTH-R1
			FAILURE UPON DEMAND OF LOGIC GROUP PROCESSING	1.16E-03	PMA0301BSA
			MECHANICAL FAILURE CAUSES MOV 023 TO FAIL-TO-OPEN	2.21E-03	RN23MOD5S
28	4.46E-09	0.46	LOSS OF OFFSITE POWER INITIATING EVENT OCCURS WITH RCS DRAINED	5.28E-03	IEV-LOSPD
			FAILURE TO RECOVER AC POWER IN 1 HOUR	4.20E-01	OTH-R1
			IWX-XMTR	2.01E-04	IWX-XMTR
			REN-MAN04	1.00E-02	REN-MAN04
29	4.12E-09	0.42	LOSS OF OFFSITE POWER INITIATING EVENT OCCURS WITH RCS DRAINED	5.28E-03	IEV-LOSPD
			FAILURE TO RECOVER AC POWER IN 1 HOUR	4.20E-01	OTH-R1
			FAILURE UPON DEMAND OF LOGIC GROUP PROCESSING	1.16E-03	PMA0301BSA
			OPERATOR FAILS TO RECOGNIZE NEED AND TO OPEN RNS MOV V023	1.60E-03	RHN-MAN05
30	4.12E-09	0.42	LOSS OF OFFSITE POWER INITIATING EVENT OCCURS WITH RCS DRAINED	5.28E-03	IEV-LOSPD
			FAILURE TO RECOVER AC POWER IN 1 HOUR	4.20E-01	OTH-R1
			FAILURE UPON DEMAND OF LOGIC GROUP PROCESSING	1.16E-03	PMA0301ASA
			OPERATOR FAILS TO RECOGNIZE NEED AND TO OPEN RNS MOV V023	1.60E-03	RHN-MAN05
31	3.67E-09	0.38	LOSS OF OFFSITE POWER INITIATING EVENT OCCURS WITH RCS DRAINED	5.28E-03	IEV-LOSPD
			OFFSITE AC POWER RECOVERED IN 1 HOUR	5.80E-01	SUC-R1S
			SOFTWARE CCF OF ALL CARDS	1.20E-06	CCX-SFTW
32	2.91E-09	0.3	LOSS OF RNS WITH RCS DRAINED INITIATING EVENT OCCURS	9.69E-05	IEV-RNSD
			CCF OF ADS 4TH S AGE SQUIB VALVES TO OPEN	3.00E-05	ADX-EV-SA
33	2.66E-09	0.27	LOSS OF OFFSITE POWER INITIATING EVENT OCCURS WITH RCS DRAINED	5.28E-03	IEV-LOSPD
			FAILURE TO RECOVER AC POWER IN 1 HOUR	4.20E-01	OTH-R1
			SOFTWARE CCF OF ALL CARDS	1.20E-06	CCX-SFTW
34	2.60E-09	0.27	LOSS OF CCS/SWS WITH RCS DRAINED INITIATING EVENT OCCURS	7.16E-04	IEV-CCWD
			CCF OF ORIFICES	3.63E-06	CCX-ORY-SPX

Table 54-15 (Sheet 5 of 7)

AP1000 SHUTDOWN PRA SENSITIVITY CASE 4 CDF CUTSETS

NUMBER	CUTSET PROB	PERCENT	BASIC EVENT NAME	EVENT PROB.	IDENTIFIER
35	2.53E-09	0.26	LOSS OF OFFSITE POWER INITIATING EVENT OCCURS WITH RCS DRAINED	5.28E-03	IEV-LOSPD
			FAILURE TO RECOVER AC POWER IN 1 HOUR	4.20E-01	OTH-R1
			FAILURE OF INV., STATIC SWITCH AND ASSOC. BREAKERS	5.16E-04	IDAMOD05
			MECHANICAL FAILURE CAUSES MOV 023 TO FAIL-TO-OPEN	2.21E-03	RN23MOD5S
36	2.52E-09	0.26	LOSS OF RNS WITH RCS DRAINED INITIATING EVENT OCCURS	9.69E-05	IEV-RNSD
			IWX-EV4-SA	2.60E-05	IWX-EV4-SA
37	2.52E-09	0.26	LOSS OF RNS WITH RCS DRAINED INITIATING EVENT OCCURS	9.69E-05	IEV-RNSD
			IWX-MV-GO1	2.60E-05	IWX-MV-GO1
38	2.20E-09	0.23	LOSS OF OFFSITE POWER INITIATING EVENT OCCURS WITH RCS DRAINED	5.28E-03	IEV-LOSPD
			OFFSITE AC POWER RECOVERED IN 1 HOUR	5.80E-01	SUC-R1S
			MECHANICAL FAILURE CAUSES MOV 121A TO FAIL-TO-OPEN	3.00E-03	IRWMOD05S
			IRWST DISCHARGE LINE "B" STRAINER PLUGGED	2.40E-04	IWB-PLUG
39	2.18E-09	0.22	OVERDRAINING OF RCS DURING DRAIN DOWN TO MID-LOOP INITIATING EVENT	5.28E-06	IEV-RCSOD
			OPERATOR FAILS TO ISOLATE RNS PIPE RUPTURE	5.50E-02	RHN-MAN04
			COND. PROB. OF IWN-MAN00 (OP. F ILS TO ACTUATE I WST INJ)	5.00E-02	IWN-MAN00C
			COND. PROB. OF RHN-MAN05 (OP. FAILS TO OPEN RNS MOV V023)	1.50E-01	RHN-MAN05C
40	1.88E-09	0.19	LOSS OF CCS/SWS WITH RCS DRAINED INITIATING EVENT OCCURS	7.16E-04	IEV-CCWD
			CCF OF PRESSURE TRANSMITTERS	2.63E-06	CCX-XMTRX
41	1.83E-09	0.19	LOSS OF OFFSITE POWER INITIATING EVENT OCCURS WITH RCS DRAINED	5.28E-03	IEV-LOSPD
			FAILURE TO RECOVER AC POWER IN 1 HOUR	4.20E-01	OTH-R1
			FAILURE OF INV., STATIC SWITCH AND ASSOC. BREAKERS	5.16E-04	IDAMOD05
			OPERATOR FAILS TO RECOGNIZE NEED AND TO OPEN RNS MOV V023	1.60E-03	RHN-MAN05
42	1.60E-09	0.16	LOSS OF OFFSITE POWER INITIATING EVENT OCCURS WITH RCS DRAINED	5.28E-03	IEV-LOSPD
			FAILURE TO RECOVER AC POWER IN 1 HOUR	4.20E-01	OTH-R1
			MECHANICAL FAILURE CAUSES MOV 121A TO FAIL-TO-OPEN	3.00E-03	IRWMOD05S
			IRWST DISCHARGE LINE "B" STRAINER PLUGGED	2.40E-04	IWB-PLUG

Table 54-15 (Sheet 6 of 7)

AP1000 SHUTDOWN PRA SENSITIVITY CASE 4 CDF CUTSETS

NUMBER	CUTSET PROB	PERCENT	BASIC EVENT NAME	EVENT PROB.	IDENTIFIER
43	1.55E-09	0.16	LOSS OF OFFSITE POWER INITIATING EVENT OCCURS WITH RCS DRAINED	5.28E-03	IEV-LOSPD
			FAILURE TO RECOVER AC POWER IN 1 HOUR	4.20E-01	OTH-R1
			LOSS OF DIST. PANEL OR BREAKER A07 SPURIOUSLY OPENS	3.17E-04	IDAMOD04
			MECHANICAL FAILURE CAUSES MOV 023 TO FAIL-TO-OPEN	2.21E-03	RN23MOD5S
44	1.47E-09	0.15	LOSS OF OFFSITE POWER INITIATING EVENT OCCURS WITH RCS DRAINED	5.28E-03	IEV-LOSPD
			FAILURE TO RECOVER AC POWER IN 1 HOUR	4.20E-01	OTH-R1
			BUS UNAVAILABLE DUE TO TEST OR CORRECTIVE MAINTENANCE	3.00E-04	IDABSDS1TM
			MECHANICAL FAILURE CAUSES MOV 023 TO FAIL-TO-OPEN	2.21E-03	RN23MOD5S
45	1.44E-09	0.15	LOSS OF CCS/SWS WITH RCS DRAINED INITIATING EVENT OCCURS	7.16E-04	IEV-CCWD
			IWX-XMTR	2.01E-04	IWX-XMTR
			REN-MAN04	1.00E-02	REN-MAN04
46	1.39E-09	0.14	LOSS OF OFFSITE POWER INITIATING EVENT OCCURS WITH RCS DRAINED	5.28E-03	IEV-LOSPD
			FAILURE TO RECOVER AC POWER IN 1 HOUR	4.20E-01	OTH-R1
			FAILURE OF PMS OUTPUT LOGIC I/Os	2.09E-03	PMAMOD11
			BUS UNAVAILABLE DUE TO TEST OR CORRECTIVE MAINTENANCE	3.00E-04	IDDBSDK1TM
47	1.39E-09	0.14	LOSS OF OFFSITE POWER INITIATING EVENT OCCURS WITH RCS DRAINED	5.28E-03	IEV-LOSPD
			FAILURE TO RECOVER AC POWER IN 1 HOUR	4.20E-01	OTH-R1
			FAILURE OF PMS OUTPUT LOGIC I/Os	2.09E-03	PMAMOD11
			BUS UNAVAILABLE DUE TO TEST OR CORRECTIVE MAINTENANCE	3.00E-04	IDDBSDD1TM
48	1.39E-09	0.14	LOSS OF OFFSITE POWER INITIATING EVENT OCCURS WITH RCS DRAINED	5.28E-03	IEV-LOSPD
			FAILURE TO RECOVER AC POWER IN 1 HOUR	4.20E-01	OTH-R1
			FAILURE OF PMS OUTPUT LOGIC I/Os	2.09E-03	PMAMOD11
			BUS UNAVAILABLE DUE TO TEST OR CORRECTIVE MAINTENANCE	3.00E-04	IDDBSDS1TM
49	1.38E-09	0.14	LOSS OF OFFSITE POWER INITIATING EVENT OCCURS WITH RCS FILLED	1.82E-02	IEV-LOSPND
			OFFSITE AC POWER RECOVERED IN 2 HOURS	7.60E-01	SUC-R2S
			FAILURE OF MANUAL DAS ACTUATION	1.16E-02	REC-MANDAS
			CCF OF THE POWER INTERFACE OUTPUT BOARDS IN PMS	8.62E-06	CCX-EP-SAM

Table 54-15 (Sheet 7 of 7)

AP1000 SHUTDOWN PRA SENSITIVITY CASE 4 CDF CUTSETS

NUMBER	CUTSET PROB	PERCENT	BASIC EVENT NAME	EVENT PROB.	IDENTIFIER
50	1.19E-09	0.12	LOSS OF OFFSITE POWER INITIATING EVENT OCCURS WITH RCS FILLED	1.82E-02	IEV-LOSPND
			OFFSITE AC POWER RECOVERED IN 2 HOURS	7.60E-01	SUC-R2S
			FAILURE OF MANUAL DAS REACTOR TRIP HARDWARE	1.00E-02	MDAS
			CCF OF THE POWER INTERFACE OUTPUT BOARDS IN PMS	8.62E-06	CCX-EP-SAM

Table 54-16

LIST OF BASIC EVENTS "DROPPED" TO MAKE THE SENSITIVITY CASE 4

; SENDATA 1 1
; 04/10/03, 11:00:10

h:\ap1000~2\38-1\case-3r1\cmtot.wlk

Case 1
h:\ap1000~2\38-1\case-3r1\cmtot.wl1

DG1-LOGIC R
RHN-MAN03 R
RNAEPRNPSA R
RNAMOD06S R
RNBEPRNPSA R
RNBMOD07S R
RNX-CV-GO R
RNX-KV-GO R
RNX-PM-ER R
RNX-PM-FS R
ZO1DG001TM R
ZO1MOD01 R
ZO1MOD03 R
ZO1MOD04 R
ZO2DG002TM R
ZO2MOD01 R
ZO2MOD03 R
ZO2MOD04 R
ZOX-BL-ER R
ZOX-BL-ES R
ZOX-DG-DR R
ZOX-DG-DS R
ZOX-FL-GP R
ZOX-PD-ER R
ZOX-PD-ES R
DAS R
ZON-MAN01 R

Table 54-17

CONTRIBUTION OF INITIATING EVENTS TO PLANT CDF – SHUTDOWN SENSITIVITY CASE 4

Plant CDF =			9.73E-07			
Number of Initiating Events =			10			
	Initiating Event	Percentage Contribution	IEV Frequency a	IEV CDF b	CDP b/a	
1	IEV-LOSPD	88.76	5.28E-03	8.63E-07	1.68E-04	drained
2	IEV-CCWD	8.67	7.16E-04	8.43E-08	9.82E-06	drained
3	IEV-RNSD	1.17	9.69E-05	1.14E-08	1.26E-04	drained
4	IEV-LOSPND	0.42	1.82E-02	4.13E-09	1.02E-05	
5	IEV-RCSOD	0.39	5.28E-06	3.75E-09	1.26E-04	drained
6	IEV-LOCA24ND	0.22	1.73E-05	2.10E-09	1.02E-05	
7	IEV-CCWND	0.18	3.99E-03	1.77E-09	7.19E-04	
8	IEV-LOCA24D	0.14	1.15E-05	1.35E-09	1.42E-04	drained
9	IEV-RNSND	0.05	1.02E-03	4.52E-10	1.26E-04	
10	IEV-LOCAPRND	0.01	1.61E-05	1.17E-10	1.76E-05	
	Sum =	100	2.94E-02	9.73E-07	1.45E-03	

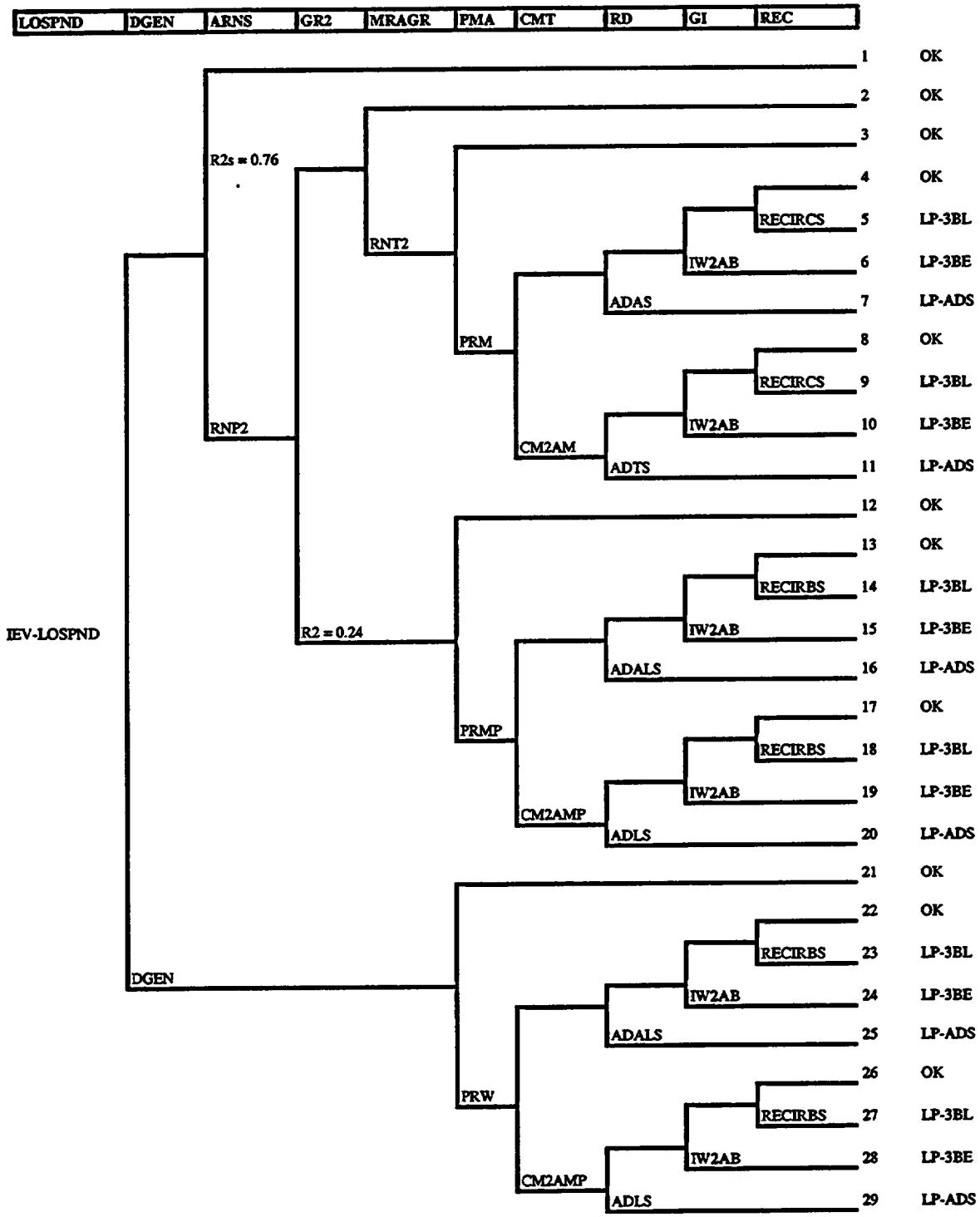

Figure 54-1 (Sheet 1 of 2)

Loss of Offsite Power During Hot/Cold Shutdown (RCS Filled) Event Tree

Event	Description
LOSPND	Loss of Offsite Power during Hot/Cold Shutdown (Non-drained RCS)
DGEN	Onsite AC Power available through Diesel Generators
ARNS	Automatic RNS Restart
GR2	Grid Recovery within 2 hours
MRAGR	Manual RNS Restart after Grid Recovery
PMA	PRHR Manual Actuation
CMT	Core Makeup Tanks Actuation
RD	RCS Depressurization
GI	Gravity Injection
REC	Containment Sump Recirculation

Figure 54-1 (Sheet 2 of 2)

Loss of Offsite Power During Hot/Cold Shutdown (RCS Filled) Event Tree

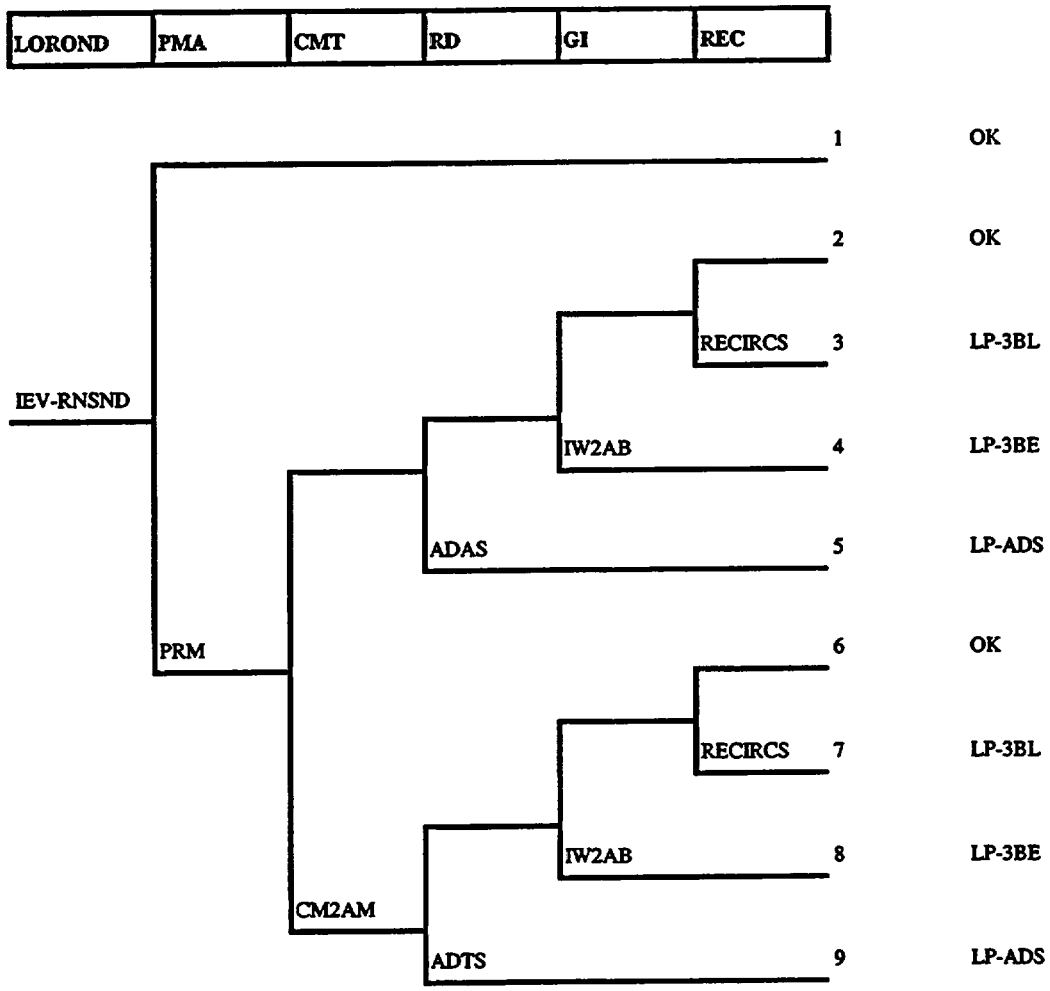

Event	Description
LOROND	Loss of RNS operation during Hot/Cold Shutdown (Non-drained RCS)
PMA	PRHR Manual Actuation
CMT	Core Makeup Tanks Actuation
RD	RCS Depressurization
GI	Gravity Injection
REC	Containment Sump Recirculation

Figure 54-2

Loss of RNS During Hot/Cold Shutdown (RCS Filled) Event Tree

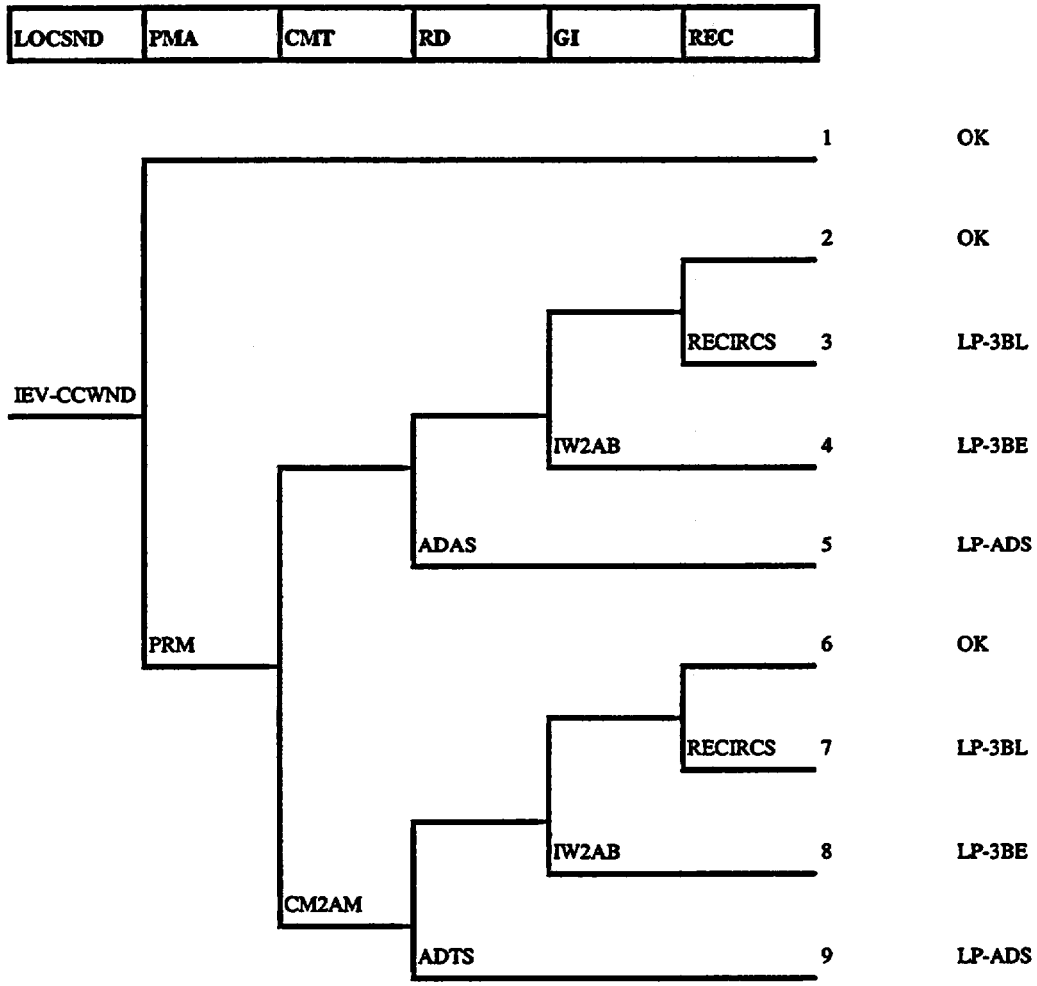

Event	Description
LOCSND	Loss of CCW/SW during Hot/Cold Shutdown (Non-drained RCS)
PMA	PRHR Manual Actuation
CMT	Core Makeup Tanks Actuation
RD	RCS Depressurization
GI	Gravity Injection
REC	Containment Sump Recirculation

Figure 54-3

Loss of CCW/SW During Hot/Cold Shutdown (RCS Filled) Event Tree

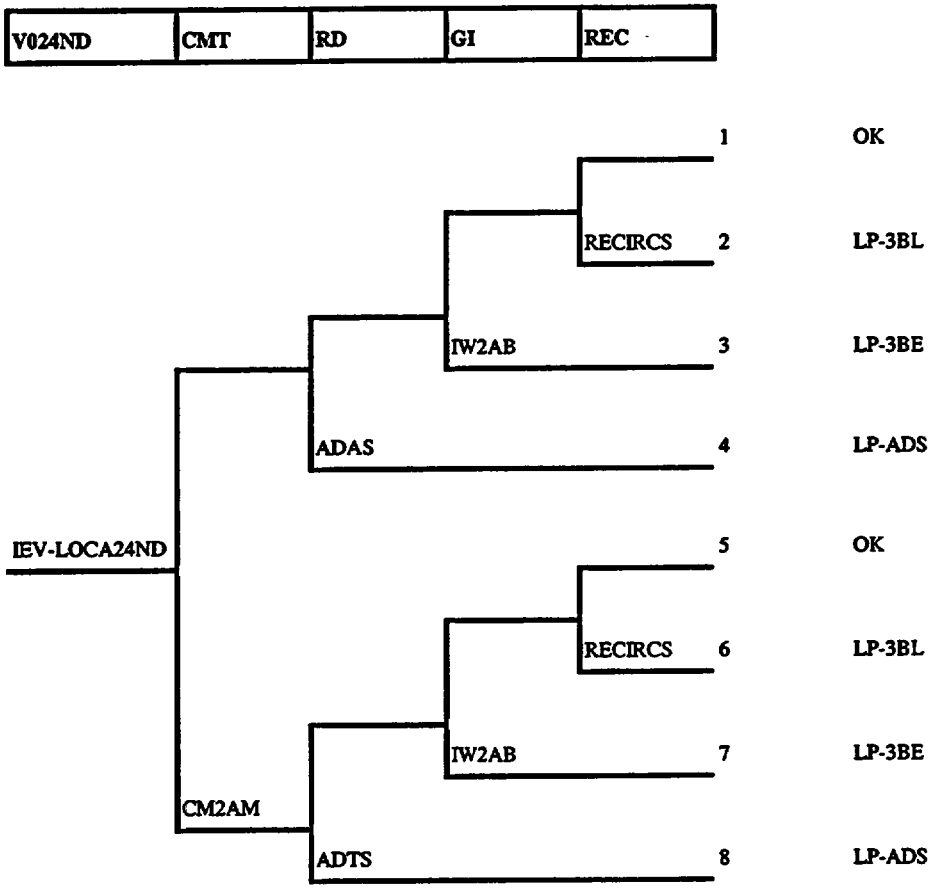

Event	Description
V024ND	LOCA through RNS-V024 during Hot/Cold Shutdown (Non-drained RCS)
CMT	Core Makeup Tanks Actuation
RD	RCS Depressurization
GI	Gravity Injection
REC	Containment Sump Recirculation

Figure 54-4

LOCA/RNS-V024 Opens During Hot/Cold Shutdown (RCS Filled) Event Tree

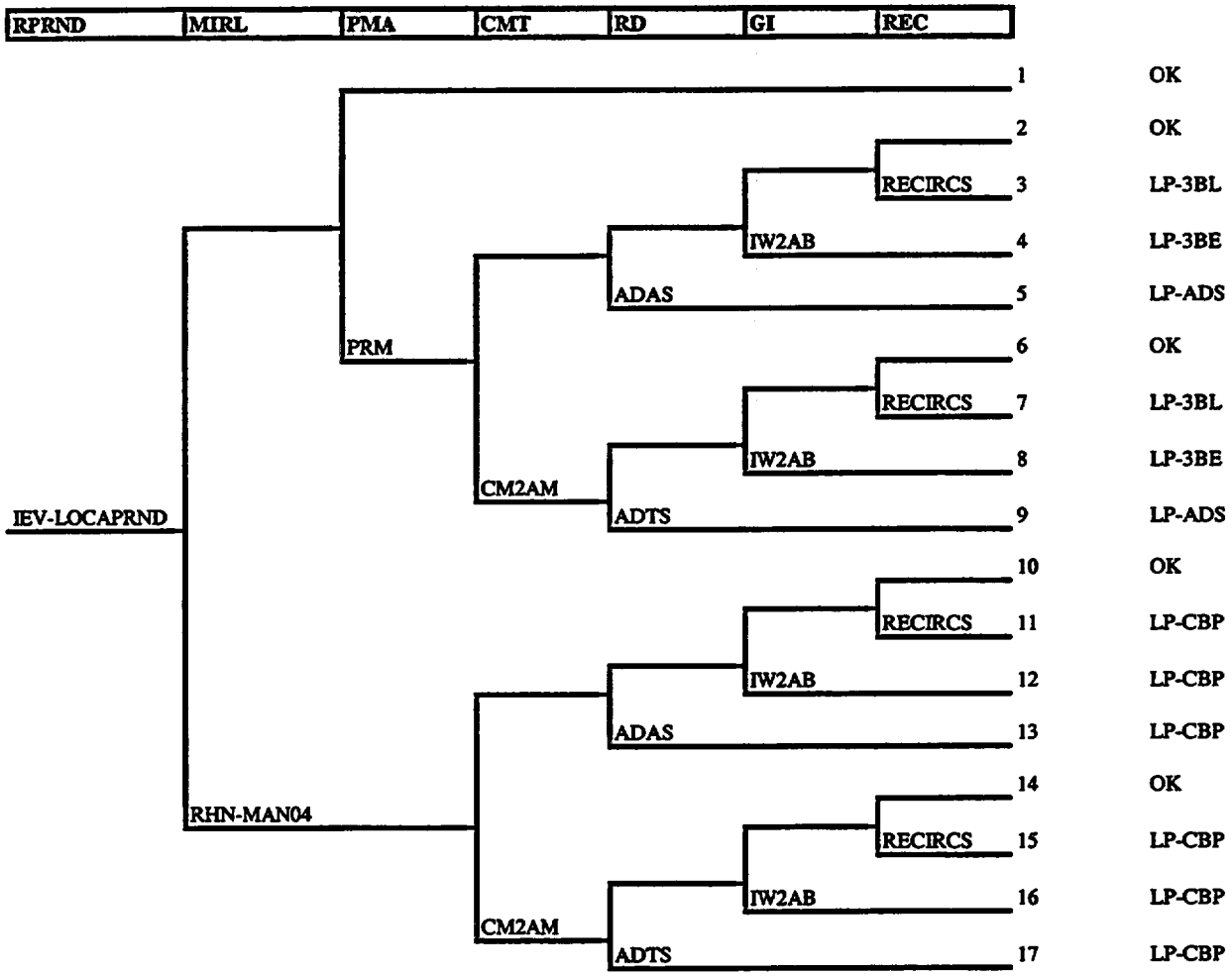

Event	Description
RPRND	RNS Pipe Rupture during Hot/Cold Shutdown (Non-drained RCS)
MIRL	Manually Isolate RNS Leak
PMA	PRHR Manual Actuation
CMT	Core Makeup Tanks Actuation
RD	RCS Depressurization
GI	Gravity Injection
REC	Containment Sump Recirculation

Figure 54-5

LOCA/RNS Pipe Rupture During Hot/Cold Shutdown (RCS Filled) Event Tree

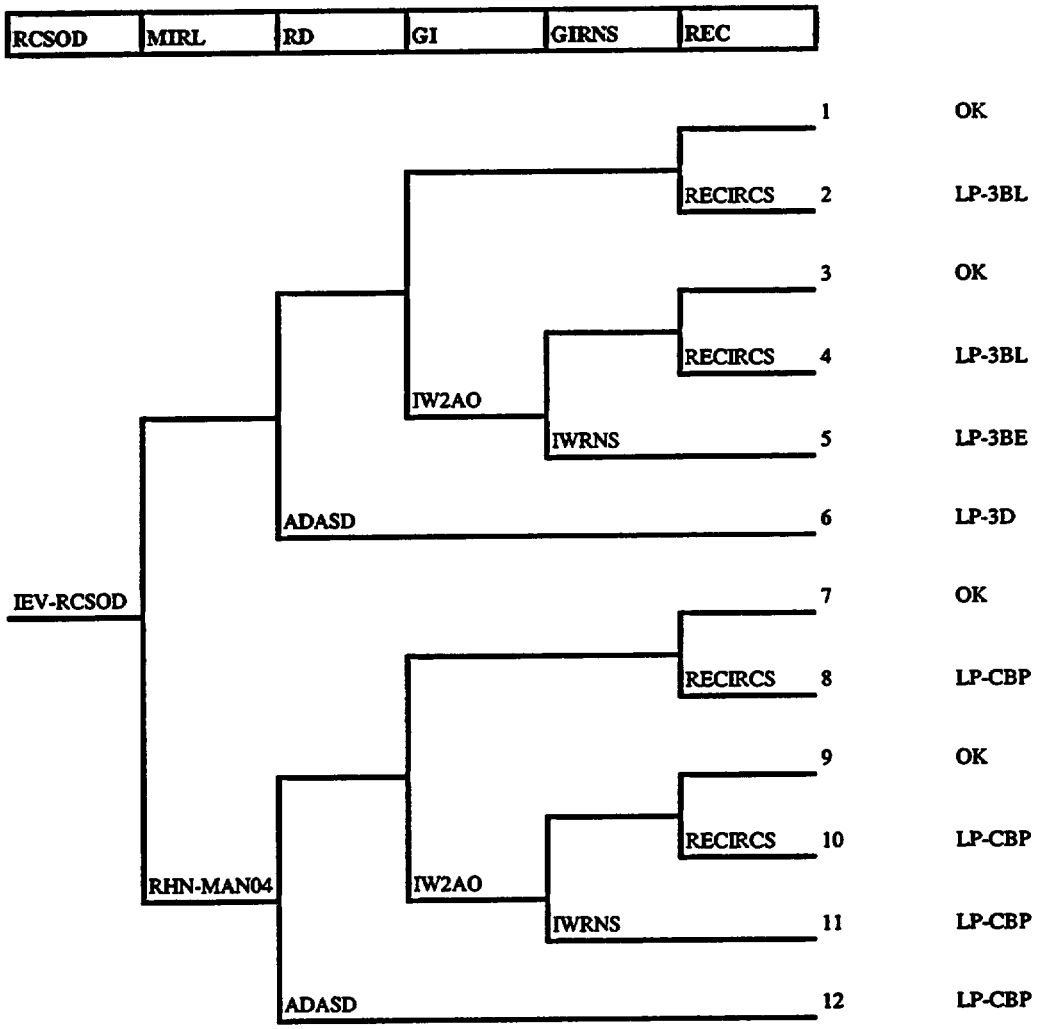

Event	Description
RCSOD	RCS Overdraining during draindown to Mid-loop
MIRL	Manually Isolate RNS Leak
RD	RCS Depressurization (4th stage)
GI	Gravity Injection
GIRNS	Gravity Injection via RNS
REC	Containment Sump Recirculation

Figure 54-6

Overdraining of Reactor Coolant System During Draindown to Mid-loop Event Tree

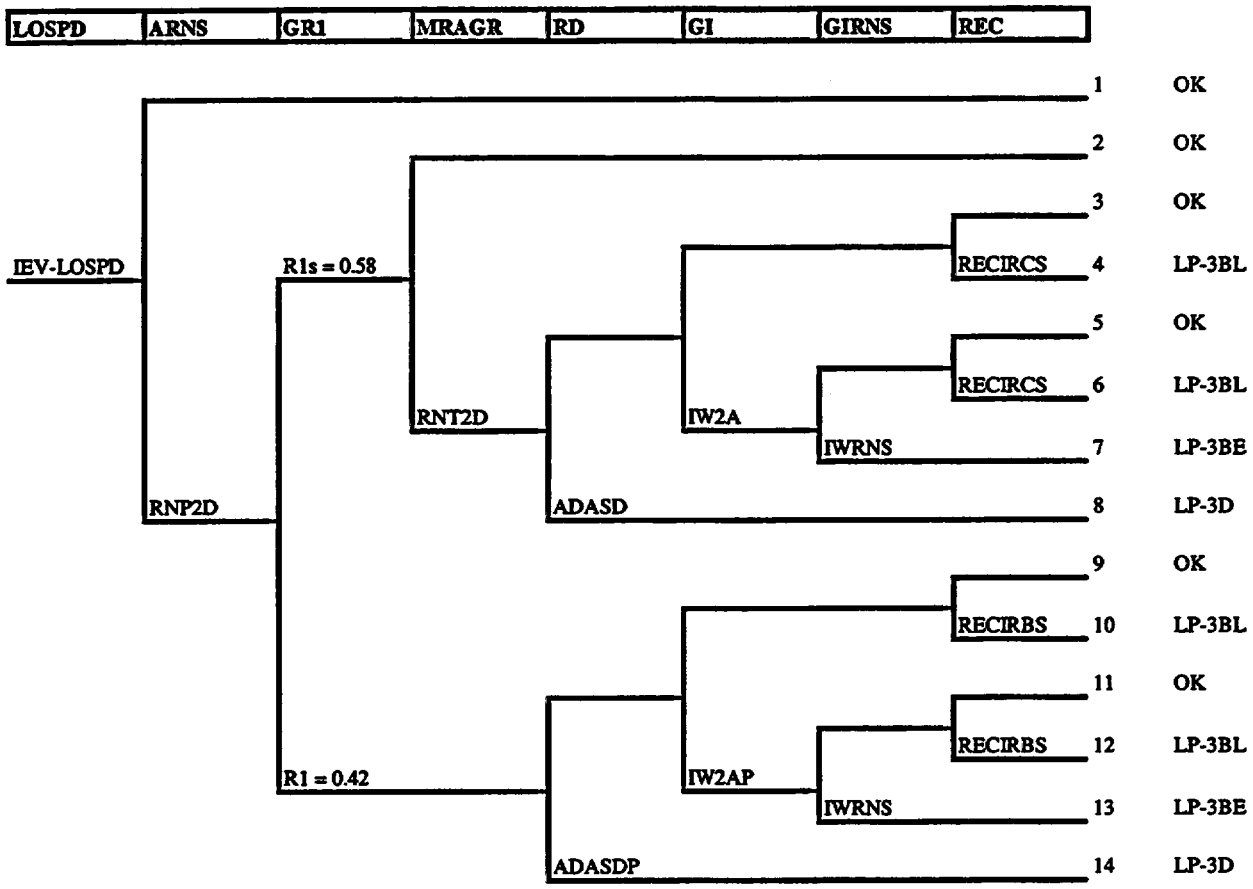

Event	Description
LOSPD	Loss of Offsite Power during drained condition (mid-loop/vessel flange)
ARNS	Automatic RNS Restart
GR1	Grid Recovery within 1 hour
MRAGR	Manual RNS Restart after Grid Recovery
RD	RCS Depressurization (4th stage)
GI	Gravity Injection
GIRNS	Gravity Injection via RNS
REC	Containment Sump Recirculation

Figure 54-7

Loss of Offsite Power During RCS Drained Condition Event Tree

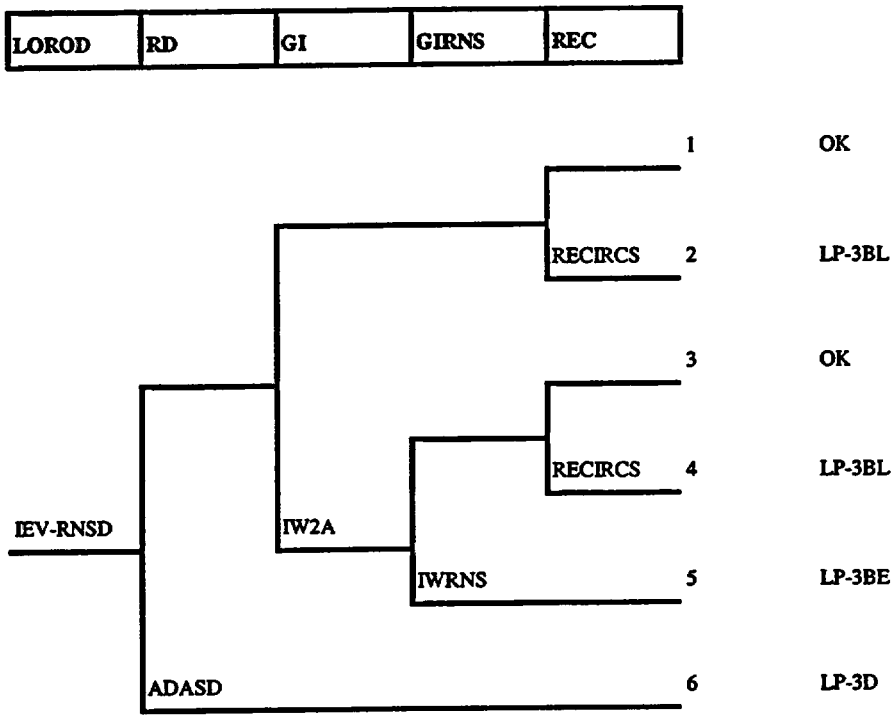

Event	Description
LOROD	Loss of RNS Operation during drained condition (mid-loop/vessel flange)
RD	RCS Depressurization (4th stage)
GI	Gravity Injection
GIRNS	Gravity Injection via RNS
REC	Containment Sump Recirculation

Figure 54-8

Loss of RNS During RCS Drained Condition Event Tree

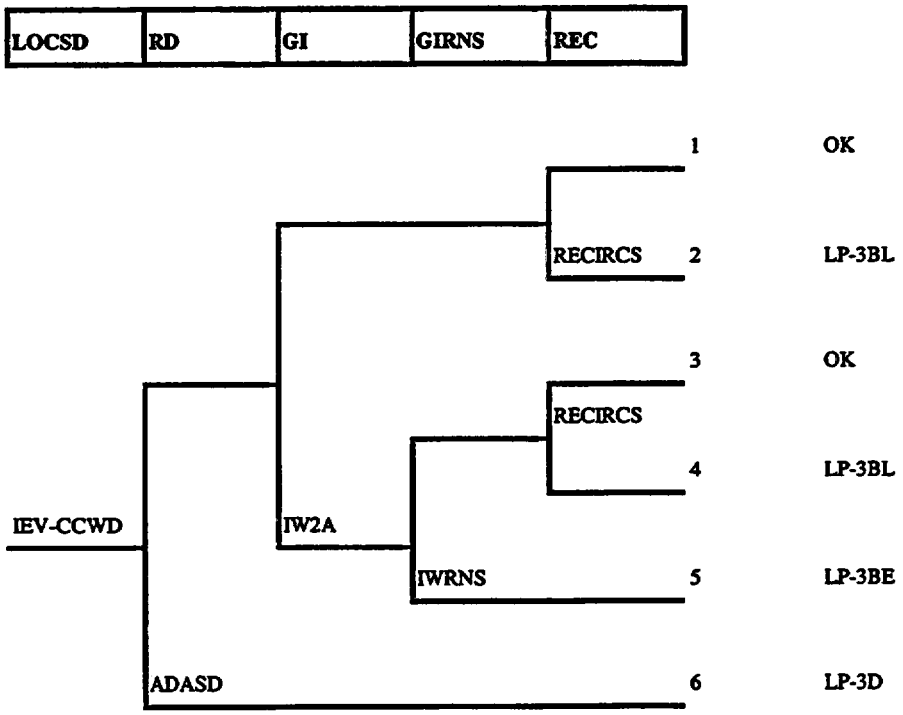

Event	Description
LOCSD	Loss of CCW/SW during drained condition (mid-loop/vessel flange
RD	RCS Depressurization (4th stage)
GI	Gravity Injection
GIRNS	Gravity Injection via RNS
REC	Containment Sump Recirculation

Figure 54-9

Loss of CCW/SW During RCS Drained Condition Event Tree

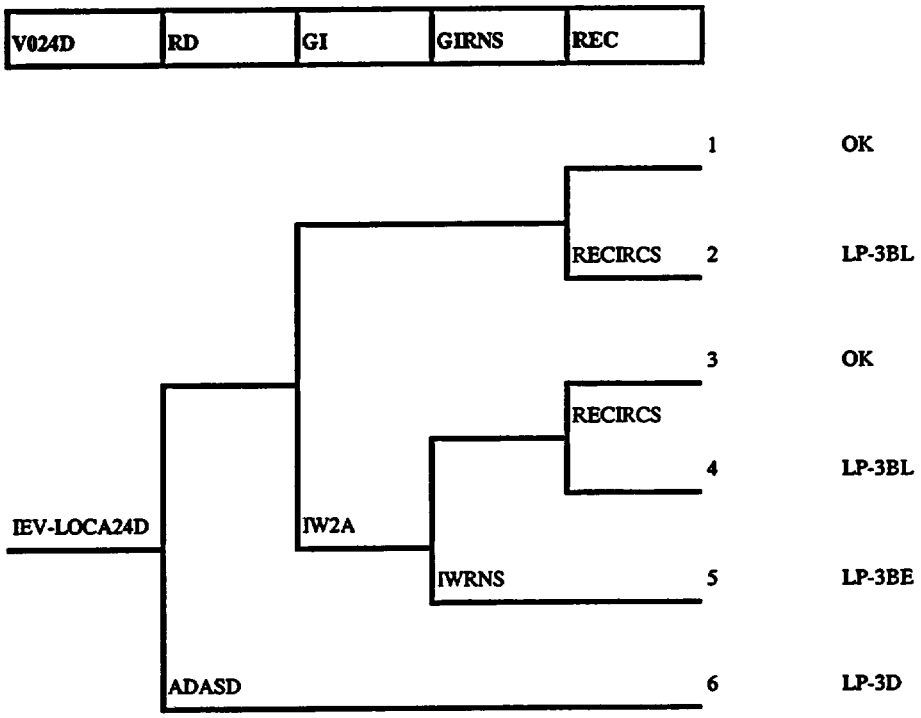

Event	Description
V024D	LOCA through RNS-V024 during drained condition (mid-loop/vessel flange)
RD	RCS Depressurization (4th stage)
GI	Gravity Injection
GIRNS	Gravity Injection via RNS
REC	Containment Sump Recirculation

Figure 54-10

LOCA/RNS-V024 Opens During RCS Drained Condition Event Tree

CHAPTER 56

INTERNAL FLOODING ANALYSIS

56.1 Introduction

As part of the AP1000 PRA, an internal flooding analysis is performed to identify, analyze, and quantify the core damage risk contribution as a result of internal flooding during at-power conditions. The internal flooding analysis models potential flood vulnerabilities, in conjunction with random failures modeled as part of the internal events PRA. Through this process, flood vulnerabilities that could jeopardize core integrity are identified.

An internal flooding PRA during low-power and shutdown conditions is also included.

The AP600 detailed design information was reviewed and then upgraded for the AP1000 analysis. Where detailed design information was not available, conservative assumptions were made to bound the flooding analysis.

56.1.1 Definitions

Safe shutdown components or systems are those components or systems used to reach a safe, stable state as determined in the internal event analysis. This includes power supplies, instrumentation and control systems, as well as support systems such as cooling water for components.

Flooding is the submergence of equipment by large volumes of water or the intrusion of water into equipment from water spray, dripping, or splashing.

56.2 Methodology

56.2.1 Summary of Methodology

In performing the internal flooding analysis, the plant is screened to identify areas susceptible to internal flooding. Areas within the plant that are essential to plant operation and that house safe shutdown equipment are screened through a two-step process to determine the susceptibility to an internal flood. This process evaluates the effects of an internal flood on the plant operation and safe shutdown. Areas that have no effect on plant operation and safe shutdown are eliminated from further analysis. Flooding scenarios are developed for the areas that are not eliminated, including any flood-induced equipment failures. These scenarios are then quantified to determine the flood-induced contribution to core damage frequency (CDF). Quantification of these scenarios considers the flood-induced equipment failure as well as random failures modeled as part of the internal events PRA. The steps necessary to perform an internal flooding evaluation are outlined below and discussed in detail in the following sections.

- Obtain information required to perform the flooding analysis
  - Collect and review plant information pertinent to the internal flooding evaluation to identify areas within the plant that contain potential flooding sources and areas that

house equipment important to plant operation and safe shutdown of the plant that could be affected by a flood

- Initial screening to identify potential critical areas
  - Postulate total immersion and identify areas that when flooded result in either a reactor trip or affect safe shutdown
  - Identify which areas have potential flooding sources
- Detailed screening to eliminate certain areas
  - Determine the maximum expected flood height in each area
  - Determine the potential for propagation to other areas
  - Determine consequences and eliminate certain areas
- Quantify flood-induced events that may contribute to core damage
  - Evaluate detection, isolation, and mitigation of the flood
  - Calculate the frequency for each flooding event
  - Calculate the flood-induced event contribution to core damage

56.2.2 Information Collection

The first step in the flooding analysis is collecting the information needed to perform the analysis. The information needed to perform a flooding analysis includes, but is not limited to: components required for safe shutdown, components that when flooded can result in a reactor trip, locations of the aforementioned components, potential flooding sources and their locations, flooding volumes and propagation paths, areas evaluated for flooding, and a Level 1 PRA.

Equipment modeled in the internal events PRA provides an excellent basis for the components required for safe shutdown. Other information useful in conducting a flooding analysis that can be obtained from the internal events PRA includes initiating event analysis, event tree analysis, and system analyses. Plant design documentation that is useful in performing the analysis includes general arrangement drawings, flood zone drawings, piping and instrumentation drawings, elevation plans, drainage capacities, estimated flow rates through piping, system volumes, and flood detection, and mitigation methods and devices.

From this information, data is assembled that summarize by area the systems or components that are located in that area and that data is then used to perform the initial screening assessment.

56.2.3 Initial Screening Assessment

Screening of the areas is accomplished by conservatively postulating that the area is completely flooded and all equipment affected by flooding in that area has failed. For this analysis, it is assumed that submerging equipment (motors or solenoids for valves, control

j. It is assumed that electrical circuit fault protection has been designed to provide protection for plant electric circuits via protective relaying, circuit breakers, and fuses. The AP1000 electrical distribution system is designed so that acceptable coordination and selective tripping is provided for safe shutdown circuits (safety and non-safety-related) on the ac and dc power systems. The design of the protective equipment will provide adequate protection of electrical distribution equipment from electric fault and overload conditions in the circuits. Therefore, loss of a component due to flooding will not result in the loss of the bus that supplies power to the affected component.

k. Loss of switchgear room cooling is assumed not to impact the operability of the switchgear located in the switchgear rooms during their PRA mission time.

l. Safety-related Class 1E electrical equipment will be qualified for environmental conditions in which they are required to function, including water spray. Containment isolation valves located inside containment are not evaluated for spray-induced failure with respect to containment isolation because they will be qualified for the environmental conditions in which they are required to function.

m. For floor drains, appropriate precautions such as check valves, back flow preventers, and siphon breaks are assumed to prevent back flow and any potential flooding.

n. The flow rate from a rupture of a fire protection system pipe to the fire hose stations is assumed to be less than the flow rate from two hose stations.

o. The number of expansion joints on the circulating water system inside the turbine building is assumed to be four.

p. The demineralized water and hot water systems are assumed to be insignificant flooding sources in the turbine building due to the limited water supply of these systems.

q. As shown in the internal events PRA, the containment isolation valves have a negligible effect on the CDF with respect to isolation and therefore, are not evaluated in the flooding analysis with the following exception. Containment isolation valves whose failure affects other systems modeled in the internal events PRA are evaluated.

r. During shutdown, the main feedwater system (FWS), condensate system (CDS), and circulating water system are assumed to not be operated and therefore, are not considered as potential significant flooding sources.

s. A security guard is assumed to be present in or immediately around the security rooms in the annex building.

t. Assumptions made about the annex building design:

- Design features will be utilized to prevent water in the non-radiologically controlled areas (non-RCA) of the annex building from entering the auxiliary building. These features will typically consist of one or more of the following: sloped floors, floor drains, double ramps, curbs, and door gaps.

- Water normally drained from radiologically controlled areas (RCAs) of the annex building to the auxiliary building are reviewed as part of the auxiliary building, and shown to be bounded by auxiliary building flooding events.
- Flooding effects determined in the Section 3.4 of AP1000 DCD are based on operator corrective action taken within 30 minutes after control room indication.
- Each fire hose station is assumed to deliver 125 gpm.
- There are no water sources located in the annex building dc switchgear or dc battery rooms.

56.4 Information Collection

Information collection involves a review of the plant information and documentation to identify the systems and components necessary for safe shutdown of the plant and potential flooding sources by building area.

56.4.1 PRA-Modeled Equipment and Locations

Equipment used to reach a safe, stable state was determined in the internal events PRA; therefore, those systems that are identified in the internal event analysis are used in the internal flooding analysis. This information along with locations establishes the basis for the screening analysis.

The systems used to reach a safe, stable state are divided into two groups: safety-related systems and non-safety-related systems. The locations of some non-safety-related components are conducted on a system basis rather than a component basis. The two exceptions to this are the ac power system and the non-Class 1E dc power system.

Equipment locations are gathered from several sources: general arrangement drawings, AP1000 databases, and clarification discussions with design engineers.

56.4.2 Identification of Areas for Flooding Evaluation

In the nuclear island, areas are determined using the flood zones and barrier drawings. In the turbine building, the areas for flooding evaluation are defined as the entire floor on a given level. The circulating water pumphouse is evaluated as one area. In the annex building, the areas for flooding evaluation are determined using the annex building general arrangement drawings.

56.5 At-Power Operations

This portion of the analysis covers the flooding risk for full-power operations, as defined in the internal events PRA. To examine flooding accidents that may lead to core damage, those systems and components used in reaching a safe, stable state in the event of a trip are considered.

cracks. Sensitive components are qualified for this environment as described in AP1000 DCD Section 3.11.

Containment Reactor Coolant System Area

The containment reactor coolant system area contains portions of the automatic depressurization system, component cooling water system, and the chemical and volume control system. Potential flooding sources include component cooling water, chemical and volume control, demineralized water, passive core cooling, reactor coolant, normal residual heat removal, spent fuel pool cooling, and steam generator systems. The fourth-stage ADS valves are located in the reactor coolant system area. These valves are located above the maximum flood level and are qualified for spray. The portion of the component cooling water system located inside containment has no effect on safe shutdown. The chemical and volume control valve V081 located in the reactor coolant system area is located above the maximum flood level and is a normally open, fail open air-operated valve; therefore, spraying of water in this area has no adverse effect on the chemical and volume control system. Propagation back through the PXS-A, PXS-B and chemical and volume control system compartment drain lines is prevented by redundant back flow preventers in each of the three drain lines. Therefore, the containment reactor coolant system area is not considered further in this analysis.

Containment 82′-6″ PXS-A Area

The containment passive core cooling system-A (PXS-A) area contains portions of the passive core cooling system and a spent fuel pool cooling system containment isolation valve. The PXS-A components subject to flooding include:

- Two isolation valves for the core makeup tank (CMT) are normally closed, fail open air-operated valves. In the event of flooding, the solenoid valves for the core makeup tank isolation valves would short to ground and fail open. Therefore, flooding has no adverse effect on the CMT isolation valve with respect to CDF.

- Accumulator isolation valve is a normally open, power lockout motor-operated valve. In the event of flooding, the position of the motor-operated valve would be unaffected. Therefore, flooding has no adverse effect on the accumulator isolation valve with respect to CDF.

- In-containment refueling water storage tank (IRWST) isolation valve is a normally open, power lockout motor-operated valve. In the event of flooding, the position of the motor-operated valve would be unaffected. Therefore, flooding has no effect on the IRWST isolation valve with respect to CDF.

- Two passive core cooling containment recirculation isolation valves are normally closed motor-operated valves. In the event of flooding, these valves will not be operable and therefore, would have an adverse effect on one train of long term cooling. The passive core cooling containment recirculation isolation valves are located at elevation 90′-0″. The motors for these valves are assumed to begin at elevation 92′-0″.

Potential flooding sources in the PXS-A compartment include a postulated rupture of the IRWST tank line, the accumulator injection line, CMT injection line, spent fuel pool cooling system piping, demineralized water piping, CVS piping, and the RNS piping. The RNS, demineralized water system, spent fuel pool cooling system, and the CVS in PXS-A are normally isolated and a pipe rupture results in a very limited release of water.

From the internal events PRA, the safety injection line break addresses the loss-of-coolant accident scenario in the PXS-A compartment. The safety injection line break also addresses the postulated rupture of the in-containment refueling water storage tank line and accumulator injection line downstream of the check valves and upstream of the check valves assuming that the check valves fail. Therefore, for non-loss-of-coolant accident flooding scenarios, the check valves in these lines are assumed to work. A postulated rupture of the CMT injection line is modeled in the internal events safety injection line break.

The flood levels corresponding to a postulated rupture of the accumulator injection line will not reach the passive core cooling containment recirculation isolation valves and is not evaluated further. A postulated rupture of the IRWST line will result in the flooding of the passive core cooling containment recirculation isolation valves. However, the IRWST line is a seismically qualified schedule 40 pipe that is under very low pressure – approximately 35 ft. of water. This pipe is expected to have low stress level. Based on this information, the probability of a double-ended rupture of this line is assumed to be approximately the same as failure of the reactor vessel. Smaller leaks in the IRWST line upstream of the check valve allow ample time for the operators to assess the situation and shutdown the plant before affecting safe shutdown. Therefore, this situation is not analyzed further.

Flooding in the PXS-A compartment can propagate to the reactor coolant system compartment via the drain line or overflowing the PXS-A compartment. Flood propagation to the reactor coolant system compartment from the PXS-A compartment will result in a lower maximum flood height than flooding in the reactor coolant system compartment. Propagation from PXS-A is not analyzed further. The containment 82′-6″ PXS-A area is not considered further in this analysis.

Containment 82′-6″ PXS-B Area

The containment passive core cooling system-B (PXS-B) area contains portions of the passive core cooling system and three RNS containment isolation valves. The PXS-B components subject to flooding include:

- Two isolation valves for the core makeup tank are normally closed, fail open air-operated valves. In the event of flooding, the solenoid valves for the core makeup tank isolation valves would short to ground and fail open. Therefore, flooding has no adverse effect on the CMT isolation valve with respect to safe shutdown.

- Accumulator isolation valve is a normally open, power lockout motor-operated valve. In the event of flooding, the position of the motor-operated valve would be unaffected. Therefore, flooding has no adverse effect on the accumulator isolation valve with respect to safe shutdown.

- IRWST isolation valve is a normally open, power lockout motor-operated valve. In the event of flooding, the position of the motor-operated valve would be unaffected. Therefore, flooding has no effect on the IRWST isolation valve with respect to safe shutdown.

- Two passive core cooling containment recirculation isolation valves are normally closed motor-operated valves. In the event of flooding, these valves will not be operable and therefore, would have an adverse effect on one train of long term cooling. The passive core cooling containment recirculation isolation valve is located at elevation 90'-0". The passive core cooling containment recirculation isolation valve is located at elevation 90'-0". The motors for these valves are assumed to begin at elevation 92'-0".

Potential flooding sources in the PXS-B compartment include a postulated rupture of the in-containment refueling water storage tank line, the accumulator injection line, core makeup tank injection line, chemical and volume control piping, and normal residual heat removal piping. The RNS and the CVS in the PXS-B compartment are normally isolated, and a pipe rupture results in a very limited release of water.

From the internal events PRA, the safety injection line break addresses the loss-of-coolant accident scenario in the PXS-B compartment. The safety injection line break also addresses the postulated rupture of the in-containment refueling water storage tank line and accumulator injection line downstream of the check valves and upstream of the check valves assuming that the check valves fail. Therefore, for non-loss-of-coolant accident flooding scenarios the check valves in these lines are assumed to work. A postulated rupture of the CMT injection line is modeled in the internal events safety injection line break.

The flood levels corresponding to a postulated rupture of the accumulator injection line will not reach the passive core cooling containment recirculation isolation valves and is not evaluated further. As in the PXS-A compartment, a postulated rupture of the in-containment refueling water storage tank line in PXS-B will result in flooding of the passive core cooling containment recirculation isolation valves but is not evaluated further based on the estimated low probability of failure of the line.

Flooding in the PXS-B compartment can propagate to the reactor coolant system compartment via the drain line or overflowing the PXS-B compartment. Flood propagation to the reactor coolant system compartment from the PXS-B compartment will result in a lower maximum flood height than flooding in the reactor coolant system compartment. Propagation from PXS-B is not analyzed further. The containment 82'-6" PXS-B area is not considered further in this analysis.

Containment 82'-6" Chemical and Volume Control System Area

The containment chemical and volume control system area contains the majority of the components associated with the chemical and volume control system. Potential flood sources include the chemical and volume control system and the liquid radwaste system. Failures within the chemical and volume control system that result in a loss-of-coolant accident are assumed to be modeled in the internal events PRA. Flooding in this area is assumed to fail the chemical and volume control system. The effects of non-loss-of-coolant accident flooding in

this area are assumed to be bound by flooding effects in the RCA portion of the auxiliary building, which results in the failure of the chemical and volume control and RNSs.

Flooding in the chemical and volume control system compartment can propagate to the reactor coolant system compartment via the drain line or overflowing the chemical and volume control system compartment. Flood propagation to the reactor coolant system compartment from the chemical and volume control system compartment will result in a lower maximum flood height than flooding in the reactor coolant system compartment. Propagation from chemical and volume control system is not analyzed further. Therefore, the containment 82′-6″ area is not considered further in this analysis.

Containment 117′-6″ Area

The containment 117′-6″ area contains portions of the plant control system and electrical containment penetrations. Potential flooding sources in the area are identified in the containment reactor coolant system area. Flooding at this level quickly drains through the grating in the floor to the containment reactor coolant system area. The electrical containment penetrations are protected from water spray. The effects from a loss of the plant control system inside containment is bounded by the effects of flooding in other areas that result in the loss of the plant control system and other systems. Therefore, the containment 117′-6″ area is not considered further in this analysis.

Containment 160′-6″ Area

The containment 160′-6″ area contains the first, second, and third stage automatic depressurization system valves. Potential flooding sources in the area are identified in the containment reactor coolant system area. Any flooding at this level quickly drains through the grating in the floor to lower elevations inside containment. The first-, second-, and third-stage ADS valves are qualified for spray. Therefore, the containment 160′-6″ area is not considered further in this analysis.

56.5.2.3 Screening of Turbine Building

Several conservative assumptions are made when screening the turbine building due to the lack of isometric drawings for most systems located in the turbine building.

Turbine Building 100′-0″ Area

The turbine building 100′-0″ area contains portions of the following systems: main and startup feedwater, condensate, circulating water, component cooling water, service water, and ac power. Potential flooding sources include the circulating water, service water, condensate, main and startup feedwater, component cooling water, condensate polishing, auxiliary steam supply, and fire protection systems. Due to the locations of the condensate polishing system and the auxiliary steam supply system, ruptures from these systems are not expected to effect any PRA-modeled equipment.

- The human error probability of the security guard identified in SGDTM failure to call the control room within 30 minutes (SGCCR) is estimated as follows:

  The nominal human error probability of omission when a short list procedure without check off provisions is used is: 3.8E-03. Conservatively assuming a high stress level, the human error probability for this subtask is 5 x 3.8E-03 = 1.9E-02.

  SGCCR is assessed as having a high dependency on SGDTM. Therefore, the conditional human error probability of SGCCR is (1 + 1.9E-02)/2 = 5.10E-01.

- The human error probability of the auxiliary personnel isolate or mitigate the fire protection system flood is estimated as follows:

  There are three options for the auxiliary personnel to isolate or mitigate the flooding: close two valves to isolate the flooding, shutoff the fire protection system pumps to stop the flooding, or open the annex building front door to provide an alternate drain path. In this evaluation only the failure to close two valves to isolate the flooding is modeled. The other options can be viewed as recovery actions that would reduce the human error probability; therefore this task is modeled conservatively.

  The nominal human error probability of failing to locally close a valve is based on an error of commission of selecting the wrong valve that is identified by labels only is 3.8E-03. Conservatively assuming a high stress level and that two valves must be closed, the human error probability of FLISM is 2 x 5 x 3.8E-03 = 3.8E-02.

- There are three paths that lead to failure:

  - FMRAP x SGDTM x (1-CRDET) x FLISM
    Conservatively assuming that (1-CRDET) = 1
    3.72E-05 x 1.9E-02 x (1) x 3.8E-02 = 2.69E-08 per year

  - FMRAP x SGDTM x CRDET x (1-SGCCR) x FLISM
    Conservatively assuming that (1-SGCCR) = 1
    3.72E-05 x 1.9E-02 x 4.31E-02 x (1) x 3.8E-02 = 1.16E-09 per year

  - FMRAP x SGDTM x CRDET x SGCCR
    3.72E-05 x 1.9E-02 x 4.31E-02 x 5.10E-01 = 1.55E-08 per year

- Therefore, the initiating event frequency is:

  - 2.69E-08 + 1.16E-09 + 1.55E-08 = 4.36E-08 per year

Auxiliary Building 66'-6", 82'-6" RCA

Rupture of the normal residual heat removal, chemical and volume control or fire protection piping results in a transient with main feedwater.

- The initiating event frequency is calculated as follows:
  - Pipe rupture rate: 4.25E-10 per section per hour
  - Number of RNS pipe sections (including those in the auxiliary building 100'-0", 117'-6" RCA): 60
  - Number of chemical and volume control pipe sections (including those in the auxiliary building 100'-0", 117'-6" RCA): 90
  - Number of fire protection pipe sections (including those in the auxiliary building 100'-0", 117-6", 135'-3" and annex building 135'-3" staging and storage area): 74
  - Number of hours per year: 8760
- The frequency of a rupture of the normal residual heat removal, chemical and volume control, or fire protection piping in the auxiliary building RCA is:
  - 4.25E-10 x (60 + 90 + 74) x 8760 = 8.34E-04 per year

Turbine Cooling Water System

The Turbine Cooling Water System (TCS) at this time is not designed but will consist of large diameter piping and a storage tank. To capture the potential flooding risk from the system, it is treated as or similar to the rupture of the cooling/service water expansion joint. It is assigned the initiating event frequency of 2.00E-03 per year.

Heater Drain System

The Heater Drain System (HDS) at this time is not designed but will consist of large diameter piping and a storage tank. To capture the potential flooding risk from the system, it is treated as or similar to the rupture of the cooling/service water expansion joint. It is assigned the initiating event frequency of 2.00E-03 per year.

56.5.5 Quantification of At-Power Flood-Induced Events

In this section, the flooding-induced CDF is quantified for internal flooding-induced initiating events at-power. The flooding-induced initiating event frequency and component(s) or system(s) that would be disabled by the given flooding event that are used in the flooding-induced CDF quantification are determined in subsection 56.5.4 and summarized in Table 56-3.

56.5.5.1 At-Power Quantification Methodology

Given the initiating event frequency for an internal flooding event and identification of component(s) or system(s) potentially affected by the flooding, the flood-induced CDF for each flooding scenario is calculated as follows.

The first step in calculating the flooding scenario CDF is identifying an event tree model that most closely models the plant conditions and mitigation strategy for the given flooding scenario. For example, if the flooding scenario causes failure of both main feedwater pumps, the loss of main feedwater to both steam generators case is used.

Once the event tree model is selected, all associated cutsets from the total core damage output file are extracted and the initiating event frequency is changed to the flooding scenario's initiating event frequency. WLINK code is used to extract the associated cutsets by setting the associated initiating event frequency to the flooding initiating event frequency, setting all other initiating event frequencies to zero, and requantifying. Using the total core damage output file as the input for this step captures all consequential events associated with the selected event tree model.

After capturing all applicable cutsets and adjusting the initiating event frequency, the failure probabilities of components of those systems that may be disabled by the given flooding event are changed to a value of one. The revised file is then quantified to obtain the flooding scenario's CDF.

The above process is used to compute each flooding scenario except for flooding scenario 6. Flooding scenario 6 causes an event similar to the transient with main feedwater available event. It includes the loss of two major ac buses (ECS ES 1 and ECS ES 2), loss of the plant control system, and loss of the diverse actuation system. This approach gives a conservative result since this flooding scenario does not cause loss of all non-safety-related systems. The contribution to the total flooding-induced CDF due to this scenario is negligible.

The final step is assessing the flooding-induced total CDF is summing the results of the main flooding scenarios for each area.

56.5.5.2 Summary of Results

The results of the flooding-induced CDF quantification are summarized in Table 56-3. Table 56-3 delineates the internal flooding contribution to core damage for the different flooding scenarios and shows the conditions and assumptions that are used in the quantification.

Scenario 1 has the same flooding initiator with two different flooding induced initiating events. The postulated rupture of the circulation water expansion joint results in both a loss of component cooling/service water event and a loss of feedwater to both steam generators event. Modeling the rupture of the circulating water expansion joint as a loss of component cooling/service water event resulted in a higher CDF than modeling the rupture as a loss of feedwater to both steam generators event. Therefore, the loss of

component cooling/service water event bounds the loss of feedwater to both steam generators and is selected to model the flooding scenario.

Scenario 2 is similar to Scenario 1 but having a different flooding initiator, the postulated rupture of condensate system (CDS), fire protection system (FPS) or main and startup feedwater system (FWS) piping, contributing to two flooding induced initiating events of loss of cooling/service water and loss of feedwater to both steam generators. The loss of cooling/service water event results in a higher CDF and is used for this scenario.

Scenario 3 has a rupture of CDS, FPS, and FWS piping as the flooding initiator contributing to three flooding induced initiating events, loss of cooling/service water, loss of feedwater to both steam generators and loss of compressed air service. The loss of cooling/service water event results in a higher CDF and is used for this scenario.

Scenario 11 has a flooding initiator contributing to one flooding induced initiating event having two distinct damage states. The flooding induced CDF is the same for both damage states therefore only one of the two damage states is considered.

Based on the conservative assumptions used to determine the affected equipment, generating the flooding initiating event frequencies, and the conservative estimates in the quantification process, the total at-power flooding-induced CDF is 8.82E-10 per year.

56.5.5.3 Sensitivity to Feedwater System Piping Length

Since the AP1000 design has a considerably higher power level than the AP600, the feedwater system may contain more piping. To compensate for the power upgrade, each AP600 feedwater system piping rupture-flood scenario was multiplied by a factor of 1.72 (power ratio AP1000/AP600). This increased the flooding-induced CDF from 8.82E-10 to 1.09E-09 as shown in Table 56-4.

56.6 Internal Flooding During Low-Power and Shutdown Conditions

The shutdown flooding analysis reviews the effects of flooding on maintaining a safe, stable state during the modes identified in the low-power and shutdown assessment. Only changes from the at-power assessment are documented in the following subsections.

56.6.1 Detailed Screening Assessment

Screening for the shutdown analysis is based on the flood screening assessment conducted for at-power operations. For shutdown, screening is based only on the systems modeled for maintaining a safe, stable state in the low-power and shutdown assessment.

- Screening of Auxiliary Building

  There are no changes from the at-power flooding assessment.

- Screening of Containment

  There are no changes from the at-power flooding assessment.

- Screening of Turbine Building

  Areas in the turbine building are retained for further analysis only for their effects on the component cooling water and service water systems. Flooding in the turbine building north or south switchgear rooms does not result in the failure of the component cooling water, service water, or RNSs and is not considered further in this analysis. The loss of main feedwater to both steam generators, loss of compressed air, and loss of condenser events are eliminated from further analysis because these systems are not modeled for maintaining a safe, stable state during shutdown.

- Screening of Annex Building

  There are no changes from the at-power flooding assessment.

- Screening of Other Buildings

  - Diesel Generator Building

    A flooding event in the diesel generator building is conservatively assumed to result in the loss of both diesel generators; however, it does not place a demand on the plant to recover from this effect. Therefore, the diesel generator building is screened from further analysis.

  - Circulating Water Pumphouse

    The circulating water pumphouse has no components used to maintain a safe, stable state during shutdown. Therefore, the circulating water pumphouse is eliminated from further analysis.

56.6.2 Identification of Flood-Induced Initiating Events

From the low-power and shutdown assessment, the following postulated initiating events could be caused by a flood-induced initiating event:

- Loss of decay heat removal due to failure within the RNS during reactor coolant system hot/cold shutdown condition

- Loss of decay heat removal due to failure within the RNS during reactor coolant system drained condition

- Loss of decay heat removal due to failure of the component cooling water system or service water system during reactor coolant system hot/cold shutdown condition

- Loss of decay heat removal due to failure of the component cooling water system or service water system during reactor coolant system drained condition

- Postulated loss-of-coolant accident and normal residual heat removal pipe break scenarios are addressed in the low-power and shutdown assessment.

Turbine Building 100′-0″, 117′-6″, 135′-3″ Areas

A rupture of the component cooling water, service water, or fire protection piping can result in a loss of the component cooling water and/or the service water systems. This scenario is retained for quantification under loss of decay heat removal due to failure of the component cooling water system or service water system for both the reactor coolant system hot/cold shutdown and the reactor coolant system drained conditions.

Annex Building 117′-6″ ac Switchgear Area

The rupture of the fire protection piping in the annex building ac switchgear area is retained for quantification under the loss of normal residual heat removal due to failure within the RNS during reactor coolant system hot/cold shutdown and the reactor coolant system drained conditions.

Annex Building 135′-3″ North Air Handling Equipment Area

The rupture of the fire protection piping in the north air handling equipment area is retained for quantification under the loss of normal residual heat removal due to failure within the RNS during reactor coolant system hot/cold shutdown and reactor coolant system drained conditions.

Auxiliary Building 66′-6″, 82′-6″ RCA

A rupture of the chemical and volume control or fire protection systems can result in a failure of the RNS. This scenario is retained for quantification under the loss of normal residual heat removal due to failure within the RNS during reactor coolant system hot/cold shutdown and reactor coolant system drained conditions. Rupture of the RNS piping is considered separately in the low-power and shutdown assessment.

56.6.3 Calculation of Flood-Induced Initiating Event Frequencies

For the annex building 135′-3″ north air handling equipment area, the loss of decay heat removal, due to failure of the normal residual heat removal scenarios from the rupture of the 8-inch fire main extension, uses the same event tree developed for the at-power annex building 135′-3″ north air handling equipment area loss of main feedwater to both steam generators scenario except for the pipe rupture probability. For all the other flood-induced scenarios, no credit is taken for corrective or mitigative actions and only an initiating event frequency is determined.

As documented in the low-power and shutdown assessment, the frequency of the plant being at hot/cold shutdown condition is 2.87 events per year. The mission time used to calculate the initiating event frequencies during the hot/cold shutdown phase is 220 hours. The frequency of the plant being at reactor coolant system drained conditions is estimated to be 1.07 events per year. The mission time used to calculate the initiating event frequencies during reactor coolant system drained conditions is 120 hours.

Turbine Building 100'-0", 117'-6", 135'-3" Areas

Rupture of the component cooling water, service water, or fire protection piping results in loss of decay heat removal due to failure of the component cooling or service water system.

- During Hot/Cold Shutdown Condition
  - The initiating event frequency is calculated as follows:
    - Pipe rupture rate: 4.25E-10 per section per hour
    - Number of service water pipe sections in the vicinity of the pumps: 16
    - Number of component cooling water pipe sections in the vicinity of the pumps: 22
    - Number of fire protection pipe sections in the vicinity of the pumps: 10
    - Number of fire protection pipe sections in 117'-6" general area: 70
    - Number of fire protection pipe sections in 135'-3" general area: 86
    - Number of fire protection pipe sections in 160'-0" general area: 24
    - Mission time: 220 hours
    - Frequency of hot/cold shutdown: 2.87 per year
  - The failure probability is:
    4.25E-10 x (16 + 22 + 10 + 70 + 86 + 24) x 220 = 2.13E-05
  - Therefore, the initiating event frequency is:
    2.13E-05 x 2.87 = 6.11E-05 per year
- During Drained Condition
  - The initiating event frequency is calculated using the same number of pipe sections and pipe failure rate as used in the hot/cold shutdown.
    - Mission time: 120 hours
    - Frequency of drained conditions: 1.07 per year
  - The failure probability is:
    4.25E-10 x (16 + 22 + 10 + 70 + 86 + 24) x 120 = 1.16E-05
  - Therefore, the initiating event frequency is:
    1.16E-05 x 1.07 = 1.24E-05 per year

Annex Building 117'-6" AC Switchgear Area

Rupture of the fire protection piping results in a loss of decay heat removal due to failure within RNS.

- During Hot/Cold Shutdown Condition
  - The initiating event frequency is calculated as follows:
    - Pipe rupture rate: 4.25E-10 per section per hour
    - Number of fire protection pipe sections: 4
    - Mission time: 220 hours
    - Frequency of hot/cold shutdown: 2.87 per year
  - The failure probability is:
    4.25E-10 x 4 x 220 = 3.74E-07
  - Therefore, the initiating event frequency is:
    3.74E-07 x 2.87 = 1.07E-06 per year
- During Drained Condition
  - The initiating event frequency is calculated using the same number of pipe sections and pipe failure rate as used in the hot/cold shutdown.
    - Mission time: 120 hours
    - Frequency of drained condition: 1.07 per year
  - The failure probability is:
    4.25E-10 x 4 x 120 = 2.04E-07
  - Therefore, the initiating event frequency is:
    2.04E-07 x 1.07 = 2.18E-07 per year

Annex Building 135'-3" North Air Handling Equipment Area

Rupture of the 8-inch fire main extension results in a loss of decay heat removal due to failure within the RNS.

- The event tree for the rupture of the fire main extension during hot/cold shutdown or during drained conditions is the same as the at-power rupture of the 8-inch fire main extension with the exception of the rupture frequency.

- During Hot/Cold Shutdown Condition
  - The rupture frequency (FMRHC) is calculated as follows:
    - Pipe rupture rate: 4.25E-10 per section per hour
    - Number of fire protection pipe sections: 10
    - Mission time: 220 hours
    - Frequency of hot/cold shutdown: 2.87 per year
  - The failure probability is:
    4.25E-10 x 10 x 220 = 9.35E-07
  - Therefore, the rupture frequency FMRHC is:
    9.35E-07 x 2.87 = 2.68E-06 per year
  - Based on the event tree, there are three paths that lead to failure:
    - FMRAP x SGDTM x (1-CRDET) x FLISM
      Conservatively assuming (1-CRDET) = 1
      2.68E-06 x 1.9E-02 x (1) x 3.8E-02 = 1.94E-09 per year
    - FMRAP x SGDTM x CRDET x (1-SGCCR) x FLISM
      Conservatively assuming (1-SGCCR) = 1
      2.68E-06 x 1.9E-02 x 4.31E-02 x (1) x 3.8E-02 = 8.35E-11 per year
    - FMRAP x SGDTM x CRDET x SGCCR
      2.68E-06 x 1.9E-02 x 4.31E-02 x 5.10E-01 = 1.12E-09 per year
  - Therefore, the initiating event frequency is:
    1.94E-09 + 8.35E-11 + 1.12E-09 = 3.14E-09 per year
- During Drained Condition
  - The rupture frequency (FMRML) is calculated using the same number of pipe sections and pipe failure rate as used in the hot/cold shutdown.
    - Mission time: 120 hours
    - Frequency of drained condition: 1.07 per year
  - The failure probability is:
    4.25E-10 x 10 x 120 = 5.10E-07
  - Therefore, the rupture frequency FMRML is:
    5.10E-07 x 1.07 = 5.46E-07 per year

- Based on the event tree, there are three paths that lead to failure:

  - FMRAP x SGDTM x (1-CRDET) x FLISM
    Conservatively assuming (1-CRDET) = 1
    5.46-07 x 1.9E-02 x (1) x 3.8E-02 = 3.94E-10 per year

  - FMRAP x SGDTM x CRDET x (1-SGCCR) x FLISM
    Conservatively assuming (1-SGCCR) = 1
    5.46E-07 x 1.9E-02 x 4.31E-02 x (1) x 3.8E-02 = 1.70E-11 per year

  - FMRAP x SGDTM x CRDET x SGCCR
    5.46E-07 x 1.9E-02 x 4.31E-02 x 5.10E-01 = 2.28E-10 per year

- Therefore, the initiating event frequency is:
  3.94E-10 + 1.70E-11 + 2.28E-10 = 6.39E-10 per year

Auxiliary Building 66'-6", 82'-6" RCA

Rupture of the chemical and volume control or fire protection piping results in a loss of decay heat removal due to failure within the RNS.

- During Hot/Cold Shutdown Condition

  - The initiating event frequency is calculated as follows:

    - Pipe rupture rate: 4.25E-10 per section per hour
    - Number of normal residual heat removal pipe sections: 60
    - Number of chemical and volume control pipe sections: 90
    - Number of fire protection pipe sections: 74
    - Mission time: 220 hours
    - Frequency of hot/cold shutdown: 2.87 per year

  - The failure probability is:
    4.25E-10 x (60 + 90 + 74) x 220 = 2.09E-05

  - Therefore, the initiating event frequency is:
    2.09E-05 x 2.87 = 6.00E-05 per year

- During Reactor Coolant System Drained Conditions

  - The initiating event frequency is calculated using the same number of pipe sections and pipe failure rate as used in the hot/cold shutdown.

    - Mission time: 120 hours
    - Frequency of reactor coolant system drained conditions: 1.07 per year

- The failure probability is:
  4.25E-10 x (60 + 90 + 74) x 120 = 1.14E-05

- Therefore, the initiating event frequency is:
  1.14E-05 x 1.07 = 1.22E-05 per year

56.6.4 Quantification of Shutdown Internal Flooding Scenario CDFs

In this section, the CDFs of shutdown internal flooding scenarios are quantified by using the initiating event frequencies calculated in the previous section, and the conditional core damage probabilities (CCDPs) obtained from the shutdown PRA (see Table 56-6). The results are summarized in Table 56-5.

Scenario 1: Turbine Building General Area – Hot/Cold Shutdown – Rupture of Component Cooling Water System, Fire Protection System, Service Water System

The applicable initiating event from the shutdown PRA for this scenario is loss of decay heat removal due to component cooling water system/service water system failure (IEV-CCWND). Since the damaged nonsafety-related accident mitigation systems are not used in this event tree, the event tree is quantified with no additional equipment failures and with a 6.11E-05 initiating event frequency. The resulting CDF is 2.71E-11 per year.

Scenario 2: Turbine Building General Area – Reactor Coolant System Drained – Rupture of Component Cooling Water System, Fire Protection System, and Service Water System

The applicable initiating event from the shutdown PRA for this scenario is loss of decay heat removal due to component cooling water system/service water system failure (IEV-CCWD). Since the damaged nonsafety-related accident mitigation systems are not used in this event tree, the event tree is quantified with no additional equipment failures and with a 1.24E-05 initiating event frequency. The resulting CDF is 1.46E-09 per year.

Scenario 3: Annex Building 117′-6″ ac Switchgear – Hot/Cold Shutdown – Rupture of Fire Protection System

The applicable initiating event from the shutdown PRA for this scenario is loss of decay heat removal due to RNS failure (IEV-RNSND). Since the damaged accident mitigation systems include both ac power buses, this scenario is essentially the corresponding shutdown focused PRA sensitivity study-initiating event. Therefore, the shutdown focused PRA event tree IEV-RNSND is quantified with no additional equipment failures and with a 1.07E-06 initiating event frequency. Additionally, prior to the quantification, the initiating event ID "IEV-RNSND" was changed to "IEV-RNSND-F" to be able to distinguish between the flooding case where the shutdown base case event tree with the same name is used. The resulting CDF is 4.74E-13 per year.

Scenario 4: Annex Building 117'-6" ac Switchgear – Reactor Coolant System Drained – Rupture of Fire Protection System

The applicable initiating event from the shutdown PRA for this scenario is loss of decay heat removal due RNS failure (IEV-RNSD). Since the damaged accident mitigation systems include both ac power buses, this scenario is essentially the corresponding shutdown focused PRA sensitivity study. Therefore, the shutdown focused PRA sensitivity study event tree IEV-RNSD is quantified with additional equipment failures and a 2.18E-07 initiating event frequency. Additionally, prior to the quantification, the initiating event ID "IEV-RNSD" was changed to "IEV-RNSD-F" to be able to distinguish between the flooding case where the shutdown base case event tree with the same name was used. To account for the additional equipment failure caused by the loss of both ac power buses, a factor of 10 penalty was assessed on the conditional core damage probability. The resulting CDF is:

1.18E-04 x 10 x 2.18E-07 = 2.57E-10 per year.

Scenario 5: Annex Building 135'-3" North Air Handling Equipment Area – Hot/Cold Shutdown – Rupture of 8-inch Fire Main Extension

The applicable initiating event from the shutdown PRA for this scenario is loss of decay heat removal due to RNS failure (IEV-RNSND). Due to the small initiating event frequency, 3.14E-09, and the plant systems that would remain available to respond to this event, this initiator was not explicitly quantified. Although the class 1E dc power batteries are failed, the ac feeds to the inverters and to the protection and safety monitoring system (PMS) cabinets remain intact and the safety-related systems should operate as expected. The non-class 1E dc failures would fail the diverse actuation system backup signals in the shutdown model. Conceding a reduced reliability of the signals to the safety-related systems, the flooding CDF for this initiator is estimated by putting a factor of 100 penalty on the conditional core damage probability for the loss of decay heat removal due to RNS failure (hot/cold shutdown):

4.43E-05 x 100 x 3.14E-09 = 1.39E-13 per year

Scenario 6: Annex Building 135'-3" North Air Handling Equipment Area – Reactor Coolant System Drained – Rupture of 8-inch Fire Main Extension

The applicable initiating event from the shutdown PRA for this scenario is loss of decay heat removal due to RNS failure (IEV-RNSD). Due to the small initiating event frequency, 6.39E-10, and the plant systems that would remain available to respond to this event, this initiator is not explicitly quantified. Although the class 1E dc power batteries are failed, the ac feeds to the inverters and to the protection and safety monitoring system cabinets remain intact and the safety-related systems should operate as expected. The non-class 1E dc failures would fail the diverse actuation system backup signals in the shutdown model. Conceding a reduced reliability of the signals to the safety-related systems, the flooding CDF for this initiator is estimated by putting a factor of 100 penalty on the conditional core damage probability for the loss of decay heat removal due to RNS failure (reactor coolant system drained):

1.18E-02 x 100 x 6.39E-10 = 7.53E-12 per year

Scenario 7: Auxiliary Building RCA Portion – Hot/Cold Shutdown – Rupture of Chemical and Volume Control System, Fire Protection System

The applicable initiating event from the shutdown PRA for this scenario is loss of decay heat removal due to RNS failure (IEV-RNSND). Since the damaged nonsafety-related accident mitigation system is the initiator and is not used for mitigation in this event tree, the event tree is quantified with no additional equipment failures and with a 6.00E-05 initiating event frequency. The resulting CDF is 2.66E-11 per year.

Scenario 8: Auxiliary Building RCA Portion – Reactor Coolant System Drained – Rupture of Chemical and Volume Control System, Fire Protection System

The applicable initiating event from the shutdown PRA for this scenario is loss of decay heat removal due to RNS failure (IEV-RNSD). Since the damaged nonsafety-related accident mitigation system is the initiator and is not used for mitigation in this event tree, the event tree is quantified with no additional equipment failures and with a 1.22E-05 initiating event frequency. The resulting CDF is 1.44E-09 per year.

56.6.5 Total Shutdown Flooding Core Damage Frequency

Based on the conservative assumptions used to generate the flooding initiating event frequencies and the conservative estimates in the quantification process, the total shutdown flooding CDF is 3.22E-09.

The results of the shutdown flood-induced CDF quantification are summarized in Table 56-5. The eight dominant flooding accident sequences are also shown in the Table 56-5.

56.6.6 Seismically Induced Flooding

Seismic events could threaten the integrity of tanks and other flooding sources. The consequences of seismic events are modeled in the seismic margin study and in the AP1000 DCD.

56.6.7 Flooding Hazards During Refueling Outages

Flooding events during refueling outages are evaluated qualitatively. Flooding can occur during refueling outages when isolation procedures are not properly followed or when tanks are overfilled. With maintenance procedures that address potential flooding problems, flooding incidents are avoided. It is assumed that administrative controls during refueling outages would effectively mitigate flooding.

56.6.8 Summary of Results

A PRA internal flooding analysis is performed for low-power and shutdown events based on the AP1000 DCD, available detailed design information, and conservative assumptions or engineering judgement.

The minimization of potential flooding sources in the safety-related areas, in addition to the physical separation of redundant safety-related components and systems from each other and from nonsafety-related components, reduces the consequences of internal flooding. The CDFs arising from flooding events during shutdown operations are not appreciable contributors to overall AP1000 CDFs.

The internal flooding analysis conservatively assumes that flooding of nonsafety-related equipment results in system failure of the affected system. This resulted in a higher flooding-induced CDF at shutdown than at-power because of the use of the nonsafety-related RNS as the primary means of decay heat removal at shutdown.

The top two shutdown flooding scenarios comprise 90 percent of the shutdown flooding-induced CDF. The dominant shutdown flooding core damage initiators are as follows:

- Shutdown flooding scenario 2, loss of decay heat removal due to failure of the component cooling water system or service water system during reactor coolant system drained condition. This is due to a rupture of component cooling water, fire protection, or service water piping in the turbine building general area. This initiator contributes 45 percent of the shutdown flooding CDF.

- Shutdown flooding scenario 8, loss of decay heat removal due to failure within the RNS during reactor coolant system drained condition. This is due to a rupture of chemical and volume control or fire protection piping in the auxiliary building RCA. This initiator contributes 45 percent of the shutdown flooding core damage.

56.7 Large Release Frequency Estimates for Internal Flooding

The large release frequency for internal flooding events is estimated by using the already calculated conditional containment failure probabilities for at-power and shutdown events. These probabilities are 0.081 and 0.1667, respectively (taken from Chapters 43 and 54). Thus the LRF estimates are:

- LRF (internal flooding at-power) = 8.82E-010 * 0.081 = 7.14E-11/yr
- LRF (internal flooding during shutdown) = 3.22E-09 * 0.1667 = 5.37E-10/yr.

Both of these LRF estimates are low and indicate a low plant risk from internal flooding events in AP1000.

56.8 Results of AP1000 Internal Flooding Analysis

In this section, a quantitative internal flooding PRA of AP1000 design is performed to estimate plant CDF and LRF for at-power and during low-power and shutdown events. The results are:

	Plant CDF	Plant LRF
Internal Flooding During At-Power Events	8.82E-10/yr	7.14E-11/yr
Internal Flooding During Low-Power and Shutdown Events	3.22E-09/yr	5.37E-10/yr

The minimization of potential flooding sources in the safety-related areas, in addition to the physical separation of redundant safety-related components and systems from each other and from nonsafety-related components, reduces the consequences of internal flooding. The core damage and large release frequencies arising from flooding events during shutdown operations are not appreciable contributors to overall AP1000 risk.

[This page intentionally blank]

Table 56-3 (Sheet 1 of 6)

AT-POWER FLOODING-INDUCED CORE DAMAGE FREQUENCY QUANTIFICATION SUMMARY RESULTS

Flooding Scenario	Flooding-Induced Initiating Event	Accident Mitigating System Damage	Flooding-Induced IEV Frequency	Conditional Core Damage Probability	Flooding-Induced Core Damage Frequency	Comments
1. Turbine 100′-0″ General Area • Rupture of expansion joint on CWS	Loss of component cooling/service water event	Damage to the following non-safety-related systems: Component cooling water system; condensate system, non-class 1E ac ECS EC411; main and startup feedwater system and service water system	2.00E-03	8.96E-08	1.79E-10	
	Loss of feedwater to both steam generators event	Damage to the following non-safety-related systems: Component cooling water system; condensate system, non-class 1E ac ECS EC411; main and startup feedwater system and service water system	2.00E-03	7.26E-08		Flooding-induced CDF of 1.45E-10 was not used to calculate total CDF
2. Turbine 117′-6″ General Area • Rupture of CDS, FPS, or FWS piping	Loss of component cooling/service water event	Damage to the following non-safety-related systems: Component cooling water system, condensate system, non-class 1E ac ECS EC 122, ECS EC 222, ECS EC 411, ECS EC 411, main and startup feedwater system, and service water system	1.38E-03	8.97E-08	1.24E-10	

Table 56-3 (Sheet 2 of 6)

AT-POWER FLOODING-INDUCED CORE DAMAGE FREQUENCY QUANTIFICATION SUMMARY RESULTS

Flooding Scenario	Flooding-Induced Initiating Event	Accident Mitigating System Damage	Flooding-Induced IEV Frequency	Conditional Core Damage Probability	Flooding-Induced Core Damage Frequency	Comments
	Loss of feedwater to both steam generators event	Damage to the following non-safety-related systems: Component cooling water system, condensate system, non-class 1E ac ECS EC 122, ECS EC 222, ECS EC 411, ECS EC 411, main and startup feedwater system, and service water system	1.38E-03	7.26E-08		Flooding-induced CDF of 1.00E-10 was not used to calculate total CDF
3. Turbine 135'-3" General Area • Rupture of CDS, FPS, or FWS piping	Loss of component cooling/service water event	Damage to the following non-safety-related systems: Compressed air system, component cooling water system, condensate system, non-class 1E ac ECS EC 122, ECS EC 222, ECS EC 311, ECS EC 411; main and startup feedwater system; plant control system, and service water system	1.47E-3	9.18E-08		Flooding-induced CDF of 1.35E-10 was not used to calculate total CDF
	Loss of feedwater to both steam generators event	Damage to the following non-safety-related systems: Compressed air system, component cooling water system, condensate system, non-class 1E ac ECS EC 122, ECS EC 222, ECS EC 311, ECS EC 411; main and startup feedwater system; plant control system, and service water system	1.47E-3	9.43E-08	1.39E-10	

Table 56-3 (Sheet 3 of 6)

AT-POWER FLOODING-INDUCED CORE DAMAGE FREQUENCY QUANTIFICATION SUMMARY RESULTS

Flooding Scenario	Flooding-Induced Initiating Event	Accident Mitigating System Damage	Flooding-Induced IEV Frequency	Conditional Core Damage Probability	Flooding-Induced Core Damage Frequency	Comments
	Loss of compressed air event	Damage to the following non-safety-related systems: Compressed air system, component cooling water system, condensate system, non-class 1E ac ECS EC 122, ECS EC 222, ECS EC 311, ECS EC 411; main and startup feedwater system; plant control system, and service water system	1.47E-3	7.10E-08		Flooding-induced CDF of 1.04E-10 was not used to calculate total CDF
4. Turbine 135'-3" North 4160 volt Switchgear Room • Rupture of CDS, FPS or FWS piping	Transient with main feedwater available event	Damage to the following non-safety-related systems: Non-class 1E ac ECS ES 4, ECS ES 8, ECS EK 41	3.72E-05	6.67E-08	2.48E-12	
5. Diesel Generator Building • Rupture of FPS piping	Transient with main feedwater available event	Damage to both diesel generators (non-safety-related system)	3.72E-05	2.84E-09	1.06E-13	

Table 56-3 (Sheet 4 of 6)

AT-POWER FLOODING-INDUCED CORE DAMAGE FREQUENCY QUANTIFICATION SUMMARY RESULTS

Flooding Scenario	Flooding-Induced Initiating Event	Accident Mitigating System Damage	Flooding-Induced IEV Frequency	Conditional Core Damage Probability	Flooding-Induced Core Damage Frequency	Comments
6. Circulating Water Pumphouse • Rupture of CWS piping	Loss of condenser event	Damage to the circulating water system	3.72E-05	1.11E-08	4.13E-13	
7. Turbine 100'-0" General Area • Rupture of CCS, FPS, or SWS piping	Loss of component cooling/service water event	Damage to the component cooling water and service water system	1.79E-4	8.77E-08	1.57E-11	
8. Turbine 100'-0" General Area • Rupture of FWS, or FPS piping	Loss of feedwater to both steam generators event	Damage to the main and startup feedwater system	2.46E-04	7.02E-08	1.73E-11	
9. Turbine 100'-0" General Area • Rupture of CDS, or FPS piping	Loss of condenser event	Damage to the condensate system	1.34E-04	1.11E-08	1.49E-12	
10. Annex Building 117'-6" AC Switchgear • Rupture of FPS piping	Transient with main feedwater available event	Damage to the following non-safety-related systems: Diverse actuation system, non-class 1E ac ECS EC 131, ECS EK 11, ECS EK 12, ECS EK 13, ECS ES 1, ECS EC 231, ECS EK 21, ECS EK 22, ECS EK 23, ECS EK 23, ECS ES 2; plant control system	1.49E-5	2.60E-09	3.87E-14	

Table 56-3 (Sheet 5 of 6)

AT-POWER FLOODING-INDUCED CORE DAMAGE FREQUENCY QUANTIFICATION SUMMARY RESULTS

Flooding Scenario	Flooding-Induced Initiating Event	Accident Mitigating System Damage	Flooding-Induced IEV Frequency	Conditional Core Damage Probability	Flooding-Induced Core Damage Frequency	Comments
11. Annex Building 135'-3" North Air Handling Area • Rupture of 8" fire main extension	Loss of feedwater to both steam generators event	Damage to the following safety-related systems: Class 1E 24 hour batteries for divisions A, B. C and D; Class 1E 24 hour spare battery. Note that class 1E division B and C 72-hour batteries remain intact. Damage to the following non-safety-related systems: Non-class 1E dc EDS1 DD 113, EDS1 DS 1, EDS1 DS 11, EDS1 EA 1, EDS1 EA 11, EDS1 EA 2, EDS3 DD 111, EDS3 DS 1, EDS3 DS 11, EDS3 EA 1, EDS3 EA 11, EDS3 EA 12, EDS3 EA 2, EDS2 DS 11, EDS2 DS 1, EDS2 DS 111, EDS2 EA 1, EDS2 EA 11, EDS2 EA 2, EDS4 DD 111, EDS4 DD 112, EDS4 DS 1, EDS4 DS 11, EDS1 DB 1, EDS2 DB1, EDS3 DB 1, EDS4 DB 1, plant control system	4.36E-08	9.78E-04	4.26E-11	
	Loss of feedwater to both steam generators event	Damage to the following safety-related systems: Class 1E 24-hour batteries for divisions A, B, C, D; Class 1E 24-hour spare battery. Note that class 1E division B and C 72-hour batteries remain intact	4.36E-08	9.78E-04		Flooding-induced CDF of 4.26E-11 was not used to calculate total CDF

Table 56-3 (Sheet 6 of 6)

AT-POWER FLOODING-INDUCED CORE DAMAGE FREQUENCY QUANTIFICATION SUMMARY RESULTS

Flooding Scenario	Flooding-Induced Initiating Event	Accident Mitigating System Damage	Flooding-Induced IEV Frequency	Conditional Core Damage Probability	Flooding-Induced Core Damage Frequency	Comments
12. Annex Building 82'-6" & 66'-6" RCA Portion • Rupture of CVS, FPS or RNS piping	Transient with main feedwater available event	Damage to the non-safety-related systems: Normal residual heat removal and chemical and volume control system	8.34E-04	2.58E-09	2.15E-12	
13. Turbine 100'-0" General Area • Rupture of TCS	Loss of component cooling/ service water event	Damage to the following non-safety-related systems: Component cooling water system; condensate system, non-class 1E ac ECS EC411; main and startup feedwater system and service water system	2.00E-03	8.96E-08	1.79E-10	
14. Turbine 100'-0" General Area • Rupture of HDS	Loss of component cooling/ service water event	Damage to the following non-safety-related systems: Component cooling water system; condensate system, non-class 1E ac ECS EC411; main and startup feedwater system and service water system	2.00E-03	8.96E-08	1.79E-10	
					8.82E-10	

Table 56-4

POWER UPGRADE DIFFERENCE BETWEEN AP1000 AND AP600

Flooding Scenario	Flooding-Induced IEV Frequency	Conditional Core Damage Probability	Flooding-Induced Core Damage Frequency	Percent of Total	Power Upgrade from AP600 to AP1000
1. Turbine 100'-0" General Area • Rupture of expansion joint on CWS	2.00E-03	8.96E-08	1.79E-10	20.31%	
2. Turbine 117'-6" General Area • Rupture of CDS, FPS, or FWS piping	1.38E-03	8.97E-08	1.24E-10	14.03%	2.13E-10
3. Turbine 135'-3" General Area • Rupture of CDS, FPS, or FWS piping	1.47E-03	9.43E-08	1.39E-10	15.71%	2.38E-10
4. Turbine 135'-3" North 4160 volt Switchgear Room • Rupture of CDS, FPS, or FWS piping	3.72E-05	6.67E-08	2.48E-12	0.28%	4.27E-12
5. Diesel Generator Building • Rupture of FPS piping	3.72E-05	2.84E-09	1.06E-13	0.01%	
6. Circulating Water Pumphouse • Rupture of CWS piping	3.72E-05	1.11E-08	4.13E-13	0.05%	
7. Turbine 100'-0" General Area • Rupture of CCS, FPS, or SWS piping	1.79E-04	8.77E-08	1.57E-11	1.78%	
8. Turbine 100'-0" General Area • Rupture of FWS, or FPS piping	2.46E-04	7.02E-08	1.73E-11	1.96%	2.97E-11
9. Turbine 100'-0" General Area • Rupture of CDS, or FPS piping	1.34E-04	1.11E-08	1.49E-12	0.17%	
10. Annex Building 117'-6" AC Switchgear • Rupture of FPS piping	1.49E-05	2.60E-09	3.87E-14	0.00%	
11. Annex Building 135'-3" North Air Handling Area • Rupture of 8" fire main extension	4.36E-08	9.78E-04	4.26E-11	4.83%	
12. Annex Building 82'-6" & 66'-6" RCA Portion • Rupture of CVS, FPS or RNS piping	8.34E-04	2.58E-09	2.15E-12	0.24%	
13. Turbine 100'-0" General Area • Rupture of expansion joint on CWS	2.00E-03	8.96E-08	1.79E-10	20.31%	
14. Turbine 100'-0" General Area • Rupture of expansion joint on CWS	2.00E-03	8.96E-08	1.79E-10	20.31%	
Total			8.82E-10	100.00%	1.09E-09

Table 56-5

SHUTDOWN FLOODING PRA

Scenario No.	Initiating Event Frequency	Conditional Core Damage Probability (CCDP)	Core Damage Frequency	Percentage Contribution	Initiating Event	Initiating Event CDP Modified
1	6.11E-05	4.43E-07	2.71E-11	0.84	IEV-CCWND	
2	1.24E-05	1.18E-04	1.46E-09	45.41	IEV-CCWD	
3	1.07E-06	4.43E-07	4.74E-13	0.01	IEV-RNSND	
4	2.18E-07	1.18E-03	2.57E-10	7.98	IEV-RNSD	Factor of 10
5	3.14E-09	4.43E-05	1.39E-13	0.00	IEV-RNSND	Factor of 100
6	6.39E-10	1.18E-02	7.53E-12	0.23	IEV-RNSD	Factor of 100
7	6.00E-05	4.43E-07	2.66E-11	0.83	IEV-RNSND	
8	1.22E-05	1.18E-04	1.44E-09	44.68	IEV-RNSD	
Sum =	1.47E-04		3.22E-09	100.00		

Note:
The conditional core damage probabilities are obtained from the AP1000 PRA Shutdown Risk Evaluation – Level 1 Analysis (see Table 56-6).

Table 56-6

SHUTDOWN INITIATING EVENT CCDPs

Initiating Event	Initiating Event Frequency	Conditional Core Damage Probability	Core Damage Frequency	Percentage Contribution	System Condition	Initiating Event Description
IEV-CCWD	7.16E-04	1.178E-04	8.431E-08	68.5	DRAINED	Loss of CCS/SWS with RCS drained initiating event occurs
IEV-LOSPD	5.28E-03	3.293E-06	1.739E-08	14.13	DRAINED	Loss of offsite power initiating event occurs with RCS drained
IEV-RNSD	9.69E-05	1.178E-04	1.141E-08	9.27	DRAINED	Loss of RNS with RCS drained initiating event occurs
IEV-RCSOD	5.28E-06	7.102E-04	3.750E-09	3.05	DRAINED	Over draining of RCS during drain down to mid-loop initiating event
IEV-LOCA24ND	1.73E-05	1.173E-04	2.029E-09	1.65		LOCA/RNS-V024 opens initiating event occurs with RCS filled
IEV-CCWND	3.99E-03	4.434E-07	1.769E-09	1.44		Loss of CCS/SWS with RCS filled initiating event occurs
IEV-LOCA24D	1.15E-05	1.177E-04	1.354E-09	1.1	DRAINED	LOCA/RNS-V024 opens initiating event occurs with RCS drained
IEV-LOSPND	1.82E-02	2.804E-08	5.103E-10	0.41		Loss of offsite power initiating event occurs with RCS filled
IEV-RNSND	1.02E-03	4.432E-07	4.521E-10	0.37		Loss of RNS with RCS filled initiating event occurs
IEV-LOCAPRND	1.61E-05	7.236E-06	1.165E-10	0.09		LOCA/RNS pipe rupture with RCS filled initiating event occurs
Sum =	2.94E-02		1.231E-07	100		

the DAS panel despite the distance between these two components, it is very unlikely that the operating team will not evacuate the MCR before the fire propagates. The operating team switches off the DAS panel while on route to the remote workstation, the power is removed from the panel, and the possibility of spurious actuation of ADS valves is averted.

Note: The protection against spurious actuation is the same for in-containment refueling water storage tank (IRWST) injection, Containment recirculation/IRWST dump to containment, and for normal residual heat removal system (RNS) isolation.

In conclusion, any significant spurious actuation of ADS valves is not credited due to a fire in the MCR.

57.4.1.3 Spurious Actuation of ADS Valves in the Plant (except the containment and the MCR)

I. Spurious Actuation of ADS Valves Due To a Fire in One 1E Division of Power and Control

Stage 4 Valves

As described in Attachment 57D, spurious actuation is not credited due to a fire in the sensor cables. This is because the fire must affect two divisions and the spurious signals must be in a valid impedance range. It also requires several spurious signals, first to actuate the core makeup tanks (CMTs) and then the low level signals and so on. This means a probability of under 0.06 x 0.06 x 0.06 x 0.06.

The sequence to get a spurious actuation of one ADS Stage 4 valve from a fire in one power and control division cable from protection and safety monitoring system (PMS) to squib valve controller cabinet is very specific. The probability should be very low. It is assumed that the arm circuit must be spuriously actuated then spuriously deactivated then the firing circuit must be spuriously actuated. The probability of spurious actuation of one ADS Stage 4 valve is then conservatively assumed to be 0.06 x 0.06 x 0.06.

Spurious actuation of one ADS Stage 4 valve due to a fire in manual actuation cables requires spurious actuation of two circuits. The probability is assumed to be 0.06 x 0.06.

Note: Division A is separated into 2 areas, 1202 AF 04 (Division A Electrical Equipment/Battery Room/I&C Room) and 1242 AF 02 (Division A Penetration Area). For this division, spurious actuation of Stage 4, induced by damages to manual control's cables is applied only to area 1242 AF 02.

ADS Stages 1, 2, 3 Valves

Spurious actuation of two ADS Stages 1, 2 and/or 3 valves is needed to get a spurious LOCA. The probability is assumed to be 0.06 x 0.06.

II. Spurious Actuation of ADS Valves Due to a Fire in Areas Other than Division Rooms

Spurious actuation is not credited due to fire in sensor cables, because this fire must affect two divisions and the spurious signals must be in a valid impedance range. It also requires several spurious signals, first to actuate the CMTs, then the low-level signals and so on. That means a probability less than 0.6 x 0.6 x 0.6 x 0.6.

ADS Stage 4 Valves

The only way to get a spurious actuation of ADS valves is from a fire in the DAS manual actuation cables. As for power & control division cables from the PMS to the squib valve controller cabinet, the sequence in hot shorts to get a spurious actuation is very specific and the probability should be very low. There are four pairs of cables that run from the MCR to the non-1E Penetration Room (1230 AF 02) passing through the corridor 1200 AF 03. The probability of spurious actuation of one Stage 4 is conservatively assumed to be 0.06 x 0.06 x 0.06.

ADS Stages 1, 2, 3 Valves

There is no possibility of a spurious actuation of ADS Stage 1, 2 or 3 valves.

57.4.1.4 Other Spurious Actuation

As described in the fire hazards analysis presented in the AP1000 DCD, the only other possibility of spurious actuation concerns the opening of the reactor vessel head vent valves. This action may lead to a LOCA scenario. However, because the risk of spurious actuation of the ADS Stages 1, 2 or 3 systematically takes into account that the 1E-electrical cables are damaged, the risk of a LOCA caused by the reactor vessel head vent is already covered.

57.4.2 Propagation Model

57.4.2.1 Outside the Containment

According to the FIVE methodology assumptions, propagation is not credited in case of a combustible loading under 20,000 Btu/ft^2.

Fire doors, piping or cable penetrations, and ventilation ducts are major fire propagation pathways. To assign a failure probability for any given fire barrier, generic failure data pertaining to the fire barrier elements and relevant plant-specific data (for example, number of doors) have to be known. The generic failure data can be obtained from many sources including NUREG/CR-4840 (Reference 4), which is presented in Table 57-5.

The barrier-specific failure probability can be obtained by determining the total number of each element in the barrier, multiplying by the corresponding failure probability, and summing the contributions from different elements. However, according to the assumptions made in AP600 and also applicable to AP1000, the total failure probability of a barrier (independent of the type of element and number of elements in each barrier) is assumed to be 0.01. This is considered to

be a realistic value since, as presented in Table 57-5, failure probability of a barrier is dominated by the fire door failure probability. It is also a conservative value for fire barriers without doors.

Unlike early fire door designs, which contribute to the NUREG/CR-4840 data, the AP1000 fire doors are designed to have alarms that annunciate in the control room if they were to be left open. Thus, for the AP1000 design, the probability of a fire door being left open, facilitating fire propagation is expected to be less than 7.40E-3.

However, in some cases, after a specific examination (showing, for example, there is no penetration, no door in the fire barrier), it may be assumed that there is no possibility of propagation through a fire barrier.

A fire barrier is not credited in case of a highly combustible loading (>80,000 Btu/ft^2) and if the automatic fire suppression system fails.

57.4.2.2 In the Containment

The combustible loading in the containment zones are generally very low. The design philosophy is to avoid propagation by having a certain distance between combustible materials. In consequence, it is assumed:

- No propagation from one zone to another zone in case of combustible loading under 20,000 Btu.
- A propagation with a probability of 0.01, from the two zones that have a combustible loading above 20,000 Btu to all the adjacent areas, is similar to area propagation outside the containment for the zones with a combustible loading above 20,000 Btu/ft^2. It is based on the design that includes distances between the different combustible loadings to avoid the propagation.
- All the components in the zone fail.

Because the last assumption may be too conservative, also studied in more detail were the components that would fail or not fail for the following zones: 1100 AF 11300B and 1100 AF 11500.

57.4.3 Fire Suppression Model

Automatic fire suppression failure probabilities are based on the values given by the FIVE methodology. Table 57-6 gives the unavailability probabilities for automatic fire suppression systems. No credit is taken for manual fire suppression.

57.4.4 Operation Actions

Human actions on controlling a fire are not usually credited. However, in comparison to the AP600 study, two human actions have been introduced to reflect the design of the AP1000.

One containment fire zone (1100 AF 11300B) has an automatic fire suppression system that requires, during at-power operations, to have a fire water supply valve external to the Containment to be manually opened prior to initiating the fire suppression system. The probability of failure is estimated at 0.03 (see Attachment 57B).

The design of the 1E-division areas is such that it allows switching off the power in case of a fire, to avoid a spurious actuation of ADS valves, before the fire propagates in the area. This value is also estimated at 0.03 (see Attachment 57B).

Actuation of ADS Stage 4 valves manually by DAS, in some scenarios, has been implicitly assigned a lower value than that used in the base AP1000 PRA. This subject is discussed in Attachment 57A.

[This page intentionally blank]

As a sensitivity study, the manual fire suppression is evaluated and credited. This sensitivity case leads to a more representative result. In operating plants, in most cases fires are manually extinguished before severe consequences can develop.

57.4.5 Development of Fire Scenarios

For each fire area, one or more fire scenarios are developed based on the following:

- Safety related and non-safety related equipment failures,
- Existence or lack of automatic fire suppression,
- Fire barriers and possibility of fire propagation beyond the fire area,
- and, the possibility of hot shorts that may lead to spurious ADS actuation.

In general, in the AP1000 internal fire analysis, four scenarios were considered for each fire area when no automatic suppression exists. Two of the scenarios deal with the consequences of fires that could be confined in the area, and two scenarios consider the consequences of fires propagating outside the area (if propagation had been found to be credible). In each set of propagating and non-propagating scenarios, in turn, the potential consequences of different cable failure modes (open and short) were evaluated. In summary, for each fire area, the following scenarios were considered:

- Scenario 1 – Fire is confined in the area and disables all the equipment located in the area (only open circuit failure modes were considered).

- Scenario 2 – Fire is confined in the area, disables all the equipment in the area, and causes safety significant hot short events.

- Scenario 3 – Fire propagates outside the area (if propagation was found to be credible) and disables all the equipment in the fire area and in adjacent fire area where the fire propagated.

- Scenario 4 – Fire propagates outside the area, disables all the equipment in the fire area and in the adjacent fire area where the fire propagated, and causes safety significant hot short events.

Note: For some areas, more scenarios are used to avoid introducing too many conservatisms in the Core Damage Probability evaluation. Particularly, for the Scenarios 2 and 4, a difference is made between spurious actuation of Stage 1, 2, 3 and Stage 4.

Based on the equipment located in each area and the fire propagation potential, one or more of the above scenarios were dismissed from further considerations. For example, for fire area 1200 AF 01, only the first and third above listed scenarios were considered to merit further analysis. That is, based on the equipment and cabling located in the area, a fire-induced hot short in the area was not considered to be safety significant. Additionally, fire propagation was considered to all fire areas with interconnecting pathway to the 1200 AF 01 fire area. However, only the consequences of fires propagating to an area with the potential to cause the most severe damage were found to merit further consideration.

those shutdown modes when the protection provided by the safety-related system is not required. Further, maintenance of nonsafety systems, such as the normal residual heat removal system, component cooling water system, and service water system, is performed at power to avoid adversely affecting shutdown risk. These contribute to the extremely low shutdown core damage and the small release frequency.

59.6 Results from Internal Flooding, Internal Fire, and Seismic Margin Analyses

59.6.1 Results of Internal Flooding Assessment

A scoping internal flooding analysis was performed based on AP1000 design information, with conservative assumptions or engineering judgement used for simplifying the analysis.

The AP1000 design philosophy of minimizing the number of potential flooding sources in safety-related areas, along with the physical separation of redundant safety-related components and systems from each other and from nonsafety-related components, minimizes the consequences of internal flooding. The core damage frequencies from flooding events at power is not an appreciable contributor to the overall AP1000 core damage frequency. The internal flooding-induced core damage frequencies are estimated to be 8.8E-10 events per year for power operations.

The internal flooding analysis conservatively assumes that flooding of nonsafety-related equipment results in system failure of the affected system. As shown in AP600 PRA, this results in a higher flooding-induced core damage frequency at shutdown than at power, because of the use of the nonsafety-related normal residual heat removal system as the primary means of decay heat removal at shutdown.

The top five at-power flooding scenarios comprise 91 percent of the at-power flooding-induced core damage frequency. Each of these scenarios relate to large pipe breaks in the turbine building with an initiating event frequency in the range of 1.4 - 2.0E-03/year, leading to a loss of CCS/SWS event. Each scenario has a CDF of 1.2 - 1.8E-10/year.

Internal flooding events during shutdown operations are also evaluated. A quantitative internal flooding PRA of AP1000 design performed to estimate plant CDF and LRF for at-power and during low-power and shutdown events provided the following results:

	Plant CDF	Plant LRF
Internal Flooding During At-Power Events	8.82E-10/yr	7.14E-11/yr
Internal Flooding During Low-Power and Shutdown Events	3.22E-09/yr	5.37E-10/yr

The minimization of potential flooding sources in the safety-related areas, in addition to the physical separation of redundant safety-related components and systems from each other and from nonsafety-related components, reduces the consequences of internal flooding. The core damage and large release frequencies arising from flooding events during shutdown operations are not appreciable contributors to overall AP1000 risk.

59.6.2 Results of Internal Fire Assessment

The total at-power, fire-induced core damage frequency is 5.61E-08 per reactor year. The estimated LRF is 4.54E-09/yr. Results of the AP1000 fire PRA analysis are summarized below.

The estimated core damage frequency from main control room fires at power is insignificant (less than 3.18E-12 per year). This low contribution is a result of the following:

- The ignition frequency is low because of the use of low-voltage 48v 10 mA dc cables in the control room. These low-voltage cables do not produce enough energy to heat the cables, thus ignition is not probable.
- Redundancy in control room operations is available within the control room itself; that is, if control room evacuation is not required, there is at least one other means available within the control room to shut down and control the plant.

[This page intentionally blank]

- If control room evacuation is necessary, the remote shutdown workstation provides complete redundancy in terms of control for safe shutdown functions.

- Loss of control of one division of power or for a whole system is not risk-significant. In addition, the passive systems are designed to operate without the need for operator interaction. Therefore, operator actions that might be disrupted by the fire scenario are backup actions, and are not significant for AP1000.

The results of the internal fire evaluation indicate that the plant's system and layout promote a low fire-induced core damage frequency compared with existing plants. Also, the results indicate that, when nonsafety-related systems are not credited and containment is treated as a special case, the fire-induced core damage frequency profile is relatively flat (i.e., no fire area is significantly more important than others).

The results from the AP1000 fire analysis confirm that the inherent design characteristics of the AP1000 also provide an effective barrier against fire hazards. This is true even within the pessimistic assumptions used throughout the study.

Conservatisms employed in the AP1000 fire analysis included the following:

- In order to minimize potential uncertainty in the results arising from the lack of as-built equipment location and cable routing information, a bounding approach to quantification was taken in accordance with the reference methodology.

- A fire originating from any ignition source in an area is assumed to disable all equipment located in the fire area. The historical evidence indicates that most fires are localized fires with limited severity.

- An assumed total at-power fire initiating event frequency corresponding to about one fire with significant consequences every 4 reactor years, well in excess of current plant experience and of that anticipated for AP1000, was assumed.

- Manual fire suppression is not credited to limit the extent of damage in an area nor to prevent fire propagation to an adjoining area. Historical evidence indicates that the majority of suppressed fires were manually suppressed with little or no additional damage.

- The assumption was made that a single hot short could result in spurious automatic depressurization system actuation.

- The estimation of containment fire frequency, not normally included in fire risk assessments, was done by making a conservative interpretation of the limited available data.

Because the approach taken in performing the internal fire analysis makes various conservative assumptions and is bounding, the results of uncertainty, sensitivity, or importance analyses would be biased. Therefore, these analyses were not performed based on

types of accident sequences: interfacing systems loss-of-coolant accidents and steam generator tube ruptures.

An interfacing systems loss-of-coolant accident is the failure of valves that separate the high pressure reactor coolant system with a lower pressure interfacing system, which extends outside the containment pressure boundary. The failure of the valve causes the reactor coolant system to pressurize the interfacing system beyond its ultimate capacity and can result in a loss-of-coolant accident outside the containment. Reactor coolant is lost outside the containment, providing a pathway for the direct release of fission products to the environment. In AP1000, systems connected to the reactor coolant system are designed with higher design pressure, which reduces the likelihood of a pipe rupture in the event of the failure of the interfacing valves. This results in a very low interfacing systems loss-of-coolant-accident contribution to core damage to containment bypass.

Steam generator tube ruptures release coolant from the reactor coolant system to the secondary system. The AP1000 has multiple and diverse automatically actuated systems to reduce the reactor coolant system pressure and mitigate the steam generator tube rupture. The passive residual heat removal subsystem is actuated automatically on the S-signal and effectively reduces the reactor coolant system pressure to stop the break flow. If the passive residual heat removal does not stop the loss of coolant, the secondary relief valve can open to keep the secondary system pressure below the opening pressure of the steam generator safety valve. If the loss of reactor coolant continues, the RCS automatic depressurization system will actuate and depressurize the system. No operator actions are required to mitigate the accident, and the secondary system remains sealed against releases to the environment after the relief valve or its block valve are closed.

To create a containment bypass release pathway from a steam generator tube rupture, the accident scenario must include multiple system failures such that the steam generator tube rupture is not mitigated, and the secondary system pressure increases enough to open a safety valve. The safety valve must fail to reseat, thereby providing a containment bypass pathway for the loss of coolant and for the possible release of fission products to the environment.

Multiple, diverse systems act to mitigate steam generator tube rupture. Therefore, the likelihood of a steam generator tube rupture progressing to containment bypass has been significantly reduced in AP1000.

59.9.5.3 Passive Containment Cooling

The passive containment cooling system provides protection to the containment pressure boundary by removing the decay and chemical heat that slowly pressurize the containment. The heat is transferred to the environment through the steel pressure boundary. The heat transfer on the outside of the steel shell is enhanced by an annular flow path, which creates a convective air flow across the shell and by the evaporation of water that is directed onto the top of the containment in the event of an accident. The evaporative heat transfer prevents the containment from pressurizing above the design conditions during design basis accidents.

In some postulated multiple-failure accident scenarios, the water flow may fail. The heat removal is limited to convection heat transfer to the air flow and radiation to the annulus

baffle. With no water film on the containment shell to provide evaporative cooling, the containment pressurizes above the design pressure to remove decay heat. Containment failure within 24 hours is highly unlikely.

59.9.5.4 High-Pressure Core Melt Scenarios

The automatic depressurization system and the passive residual heat removal heat exchanger provide reliable and diverse reactor coolant system depressurization, which significantly reduces the likelihood of high pressure core damage. High-pressure core damage sequences have the potential to fail steam generator tubes and create a containment bypass release, or to cause severe accident phenomena at the time of vessel failure which may threaten the containment pressure boundary. Reducing the reactor coolant system pressure during a severe accident significantly lowers the likelihood of phenomena that may induce large fission product releases early in the accident sequence.

59.9.5.5 In-Vessel Retention of Molten Core Debris

The AP1000 reactor vessel and containment configuration has features that enhance the design's ability to maintain molten core debris in the reactor vessel. The AP1000 automatic depressurization system provides reliable pressure reduction in the reactor coolant system to reduce the stresses on the vessel wall. The reactor vessel lower head has no vessel penetrations, thus eliminating penetration failure as a potential vessel failure mode. The containment configuration directs water to the reactor cavity and allows the in-containment refueling water storage tank water to be drained into the cavity to submerge the vessel to cool the external surface of the lower head. Cooling the vessel and reducing the stresses prevents the creep rupture failure of the vessel wall. The reactor vessel reflective insulation has been designed with provisions to allow water inside the insulation panel to cool the vessel surface, and with vents to allow steam to exit the insulation without failing the insulation support structures. The insulation is designed so that it promotes the cooling of the external surface of the vessel.

Preventing the relocation of molten core debris to the containment eliminates the occurrence of several severe accident phenomena, such as ex-vessel fuel-coolant interactions and core-concrete interaction, which may threaten the containment integrity. Through the prevention of core debris relocation to the containment, the AP1000 design significantly reduces the likelihood of containment failure.

59.9.5.6 Combustible Gases Generation and Burning

In severe accident sequences, high temperature metal oxidation, particularly zirconium, results in the rapid generation of hydrogen and possibly carbon monoxide. The first combustible gas release occurs in the accident sequence during core uncovery when the oxidation of the zircaloy cladding by passing steam generates hydrogen. A second release may occur if the vessel fails and ex-vessel debris degrades the concrete basemat. Steam and carbon dioxide are liberated from the concrete and are reduced to hydrogen and carbon monoxide as they pass through the molten metal in the debris. These gases are highly combustible and in high concentrations in the containment may lead to detonable mixtures.

Table 59-14

TYPICAL SYSTEM FAILURE PROBABILITIES, SHOWING HIGHER RELIABILITIES FOR SAFETY SYSTEMS

Failure System/Function	Probability	Fault Tree Name	
CMT Valve Signal	5.7E-07	CMT-IC11	(one train; auto and manual actuation)
PRHR Valve Signal	1.1E-06	RHR-IC01	(one train; auto and manual actuation)
Passive Cont. Cool.	1.8E-06	PCT	
Reactor Trip by PMS	1.2E-05	RTPMS	(including operator actions)
Accumulators	6.9E-05	AC2AB	
IRWST Inj.	6.9E-05	IW2AB	
ADS	9.3E-05	ADS	(including operator actions)
Passive PRHR	2.0E-04	PRT	
Core Makeup Tanks	1.1E-04	CM2SL	
125 vdc 1E Bus	3.1E-04	IDADS1	(one bus only)
DC Bus (Non-1E)	3.4E-04	ED1DS1	(one bus only)
RC Pump Trip	5.9E-04	RCT	
Hydrogen Control	1.0E-01	VLH	
Chilled Water	1.4E-03	VWH	
Containment Isol.	1.6E-03	CIC	
Reactor Trip by DAS	1.7E-03	DAS	(including operator action; excluding MGSET failure))
6900 vac Bus	3.2E-03	ECES1	(one bus only)
CVS	3.4E-03	CVS1	
480 vac Bus	5.9E-03	ECEK11	(one bus only)
Service Water	6.2E-03	SWT	
Comp. Cooling Water	6.3E-03	CCT	
Diesel Generators	1.0E-02	DGEN	
Startup Feedwater	1.7E-02	SFWT	
Compressed Air	1.3E-02	CAIR	
Condenser	2.4E-02	CDS	
Main Feedwater	2.8E-02	FWT	(including condenser)
RNS	9.1E-02	RNR	
Hydrogen Control	1.0E-01	VLH	

Table 59-15

SUMMARY OF AP1000 PRA RESULTS

Events	Core Damage Frequency (per year)		Large Release Frequency (per year)	
	At-Power	Shutdown	At-Power	Shutdown
Internal Events	2.41E-07	1.23E-07	1.95E-08	2.05E-08
Internal Flood	8.82E-10	3.22E-09	7.14E-11	5.37E-10
Internal Fire	5.61E-08	8.5E-08(1)	4.54E-09	1.43E-08
Sum =	2.97E-07	2.11E-07	2.41E-08	3.53E-08

Note:
1. Internal fire during shutdown is evaluated quantitatively as a response to an NRC question and is not reported elsewhere in this document.