Copy with Steve Long's notes

Root Cause Analysis of the Reactor Pressure Vessel Head Degradation at the Davis-Besse Nuclear Power Station

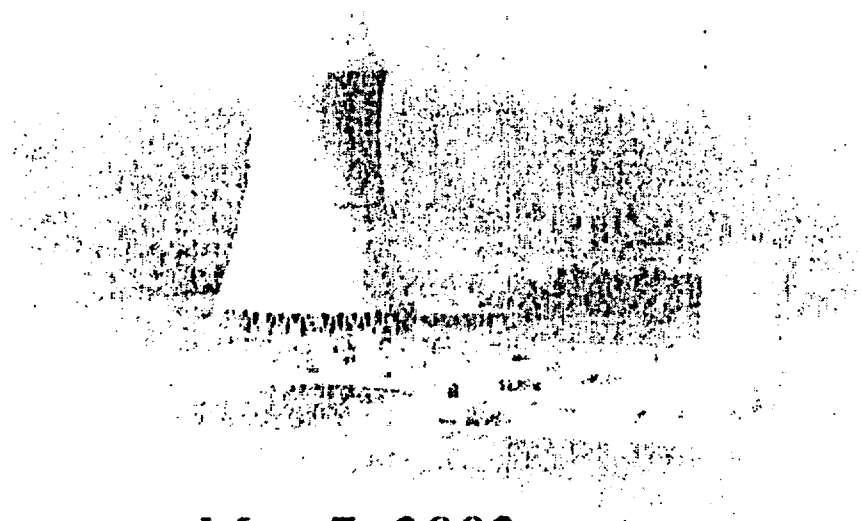

May 7, 2002

FENOC

Information in this record was deleted in accordance with the Freedom of Information Act, exemptions 5
FOIA- 2003-0015

G16

Agenda

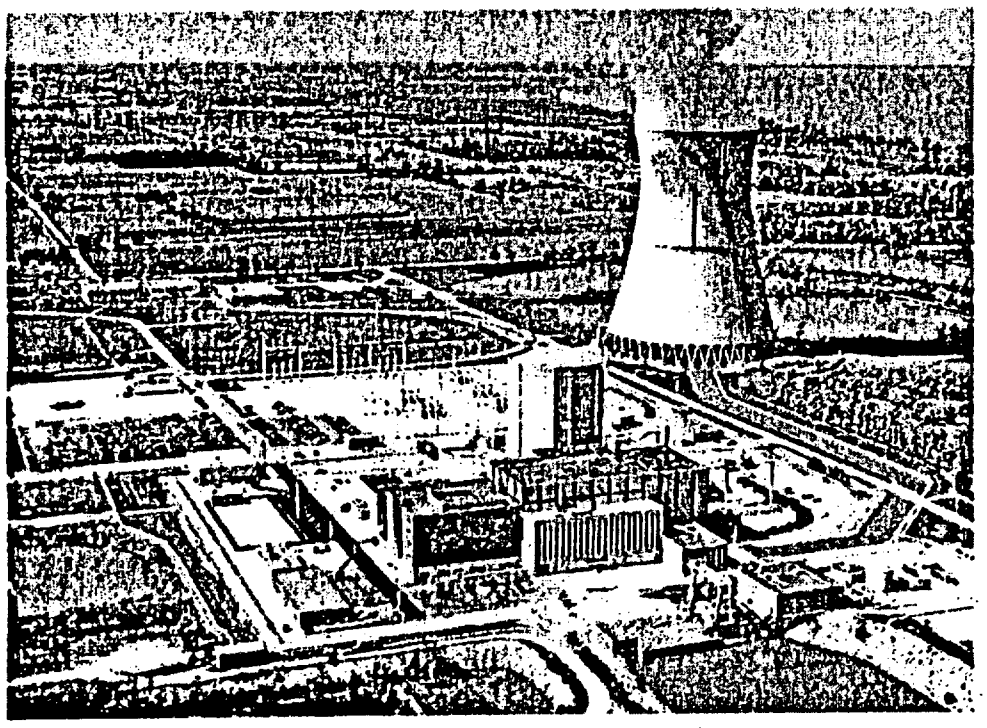

- Introduction - John Wood
- Discovery of RPV Head Degradation - Mark McLaughlin
- Root Cause Investigation - Steve Loehlein
- Concluding Remarks - John Wood

Root Cause Summary

Inadequate inspection of the RPV closure head prevented early detection of nozzle leakage, resulting in prolonged boric acid corrosion and significant degradation.

Discovery of RPV Head Degradation

Mark McLaughlin

Field Activities Team Leader

FENOC

RPV Head Configuration

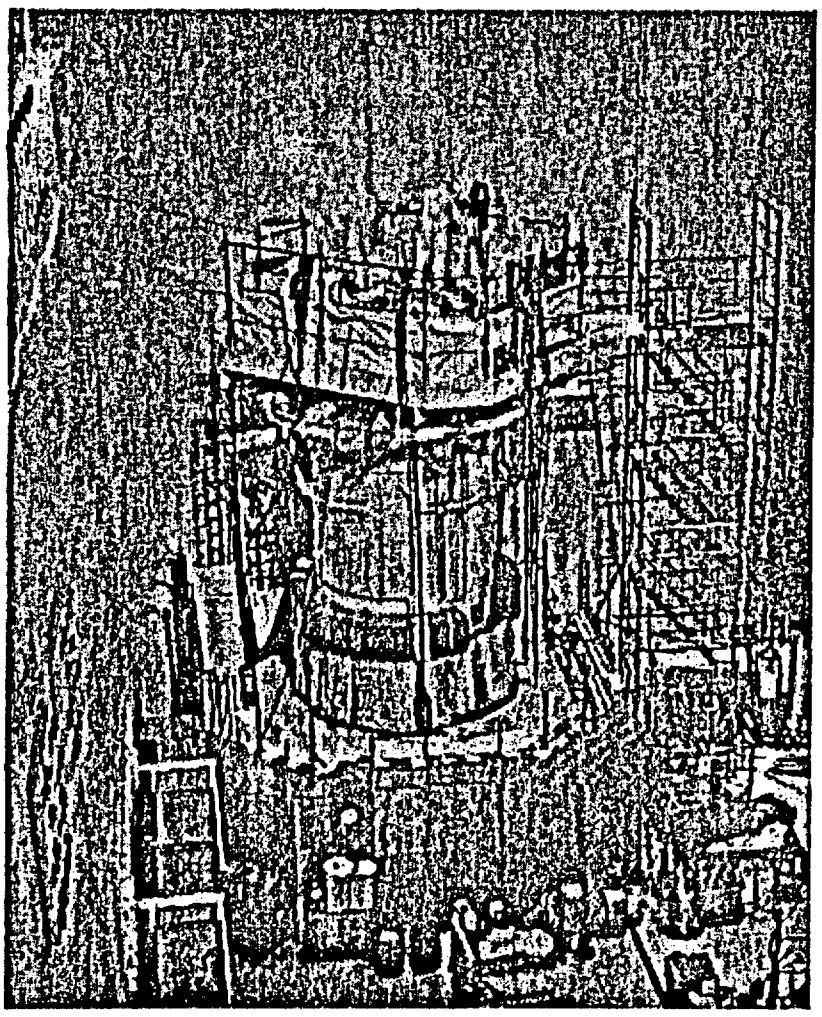

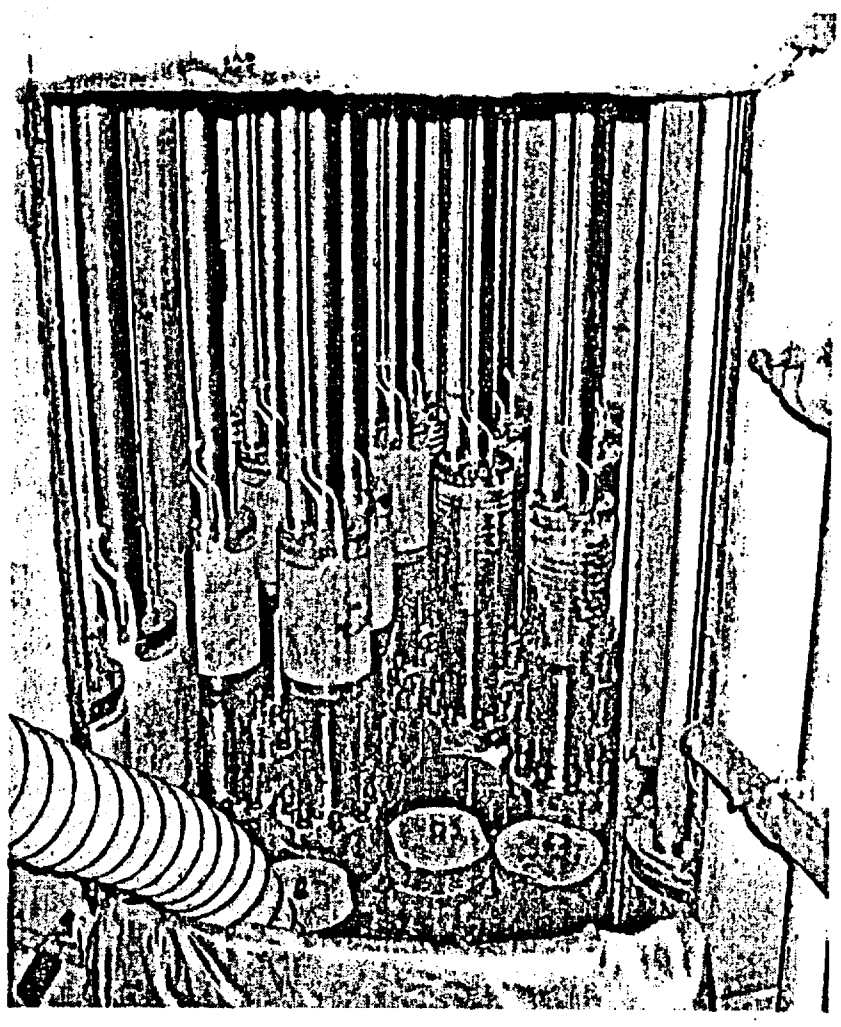

RPV Head Configuration

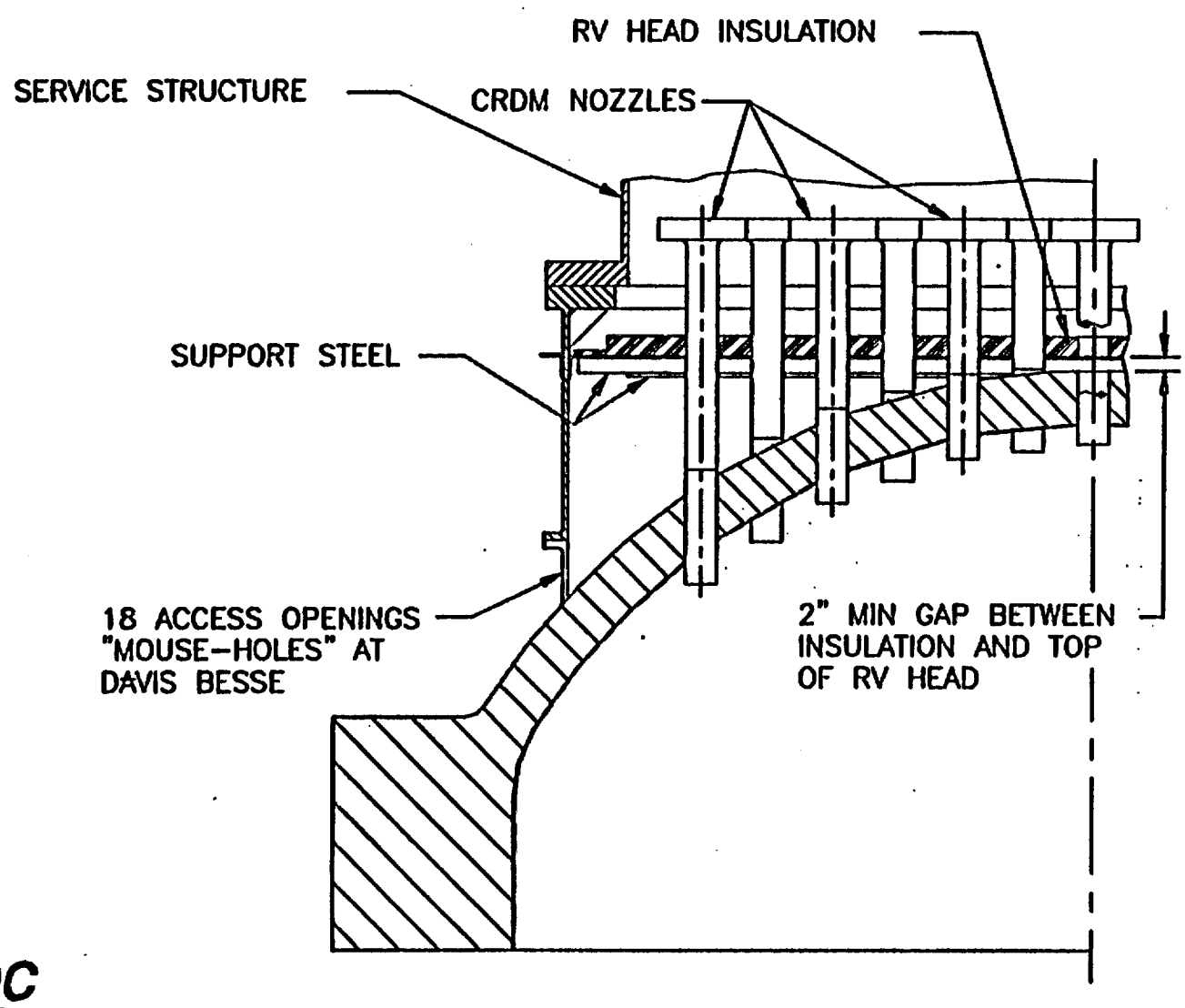

FENOC

Access Openings

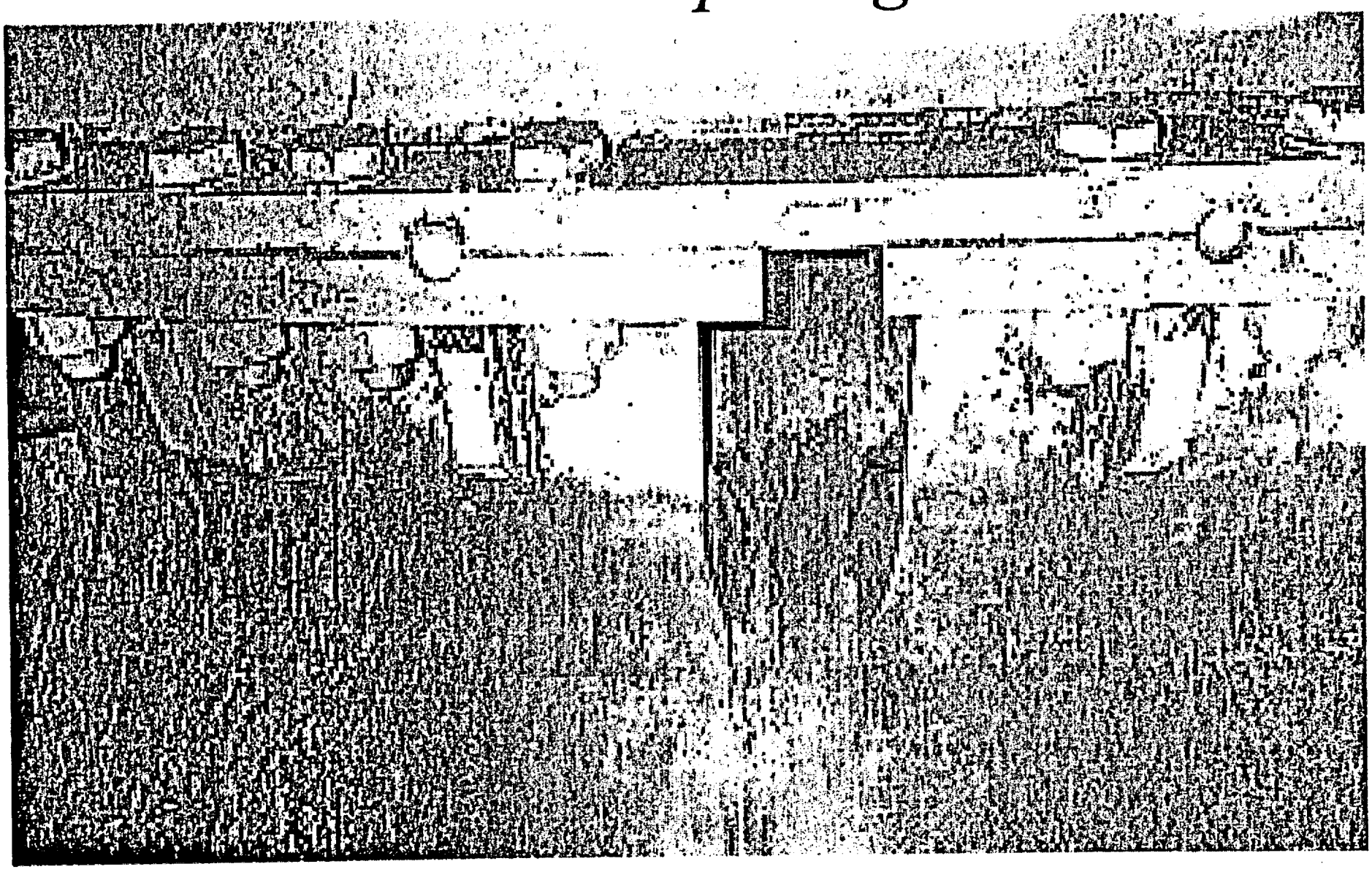

Control Rod Drive Nozzle

Typical Control Rod Drive Nozzle
(Babcock & Wilcox)

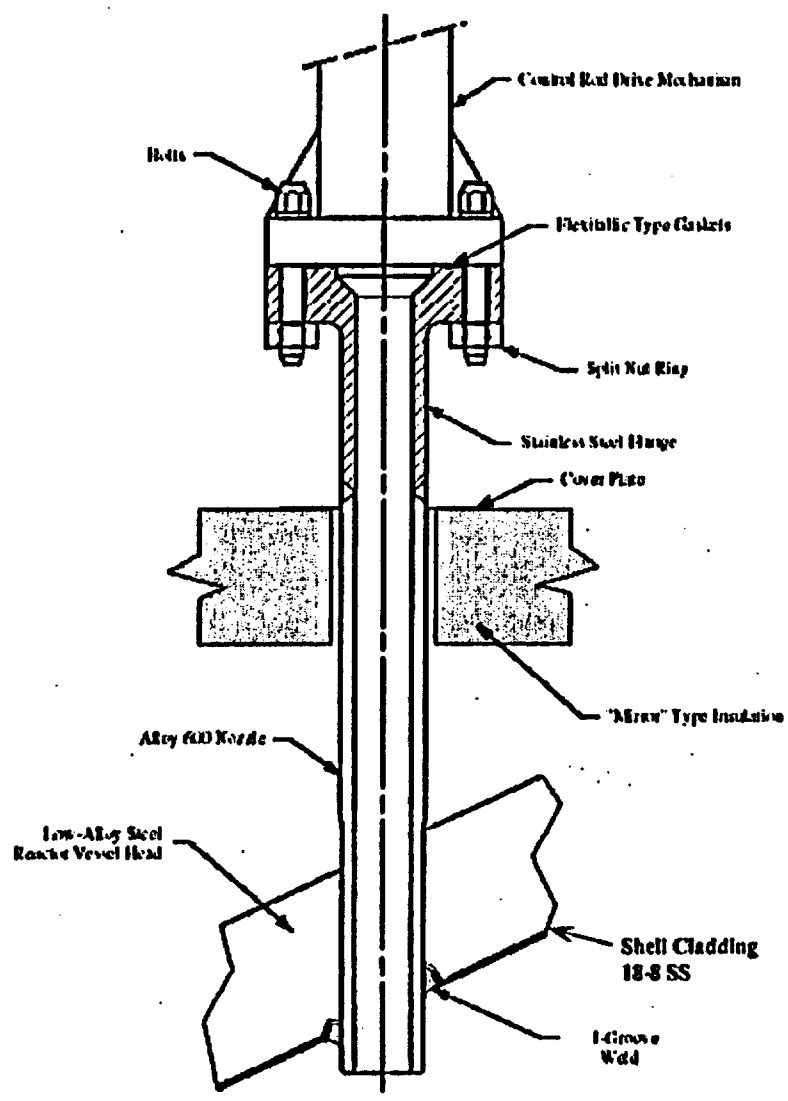

FENOC

Discovery Steps

- February 16 13 RFO (refueling outage) starts
- February 24 Visual examination starts
  - Restraint on plant restart due to boron on head
- February 26 Ultrasonic (UT) examinations started
- February 27 Flaw found on nozzle 3
  - Restraint on plant restart due to flaw on nozzle
- March 5 UT examinations completed
  - Nozzle 2 & 3 confirmed leak paths and backwall anomaly
- March 8 Nozzle 3 cavity confirmed and reported to NRC
  - Initial Root Cause Team formed

UT Examination Results

Nozzle #	Summary of Results
1*	9 Axial Flaws, 2 through-wall (TW)
2*	8 Axial Flaws, 1 Circumferential Flaw, 6 TW
3*	4 Axial Flaws, 2 TW
5*	1 Axial Flaw
46	No Flaw Indication
47	1 Axial Flaw
58	No Recordable Indications

* Heat number M3935 material

FENOC

Facts of Discovery

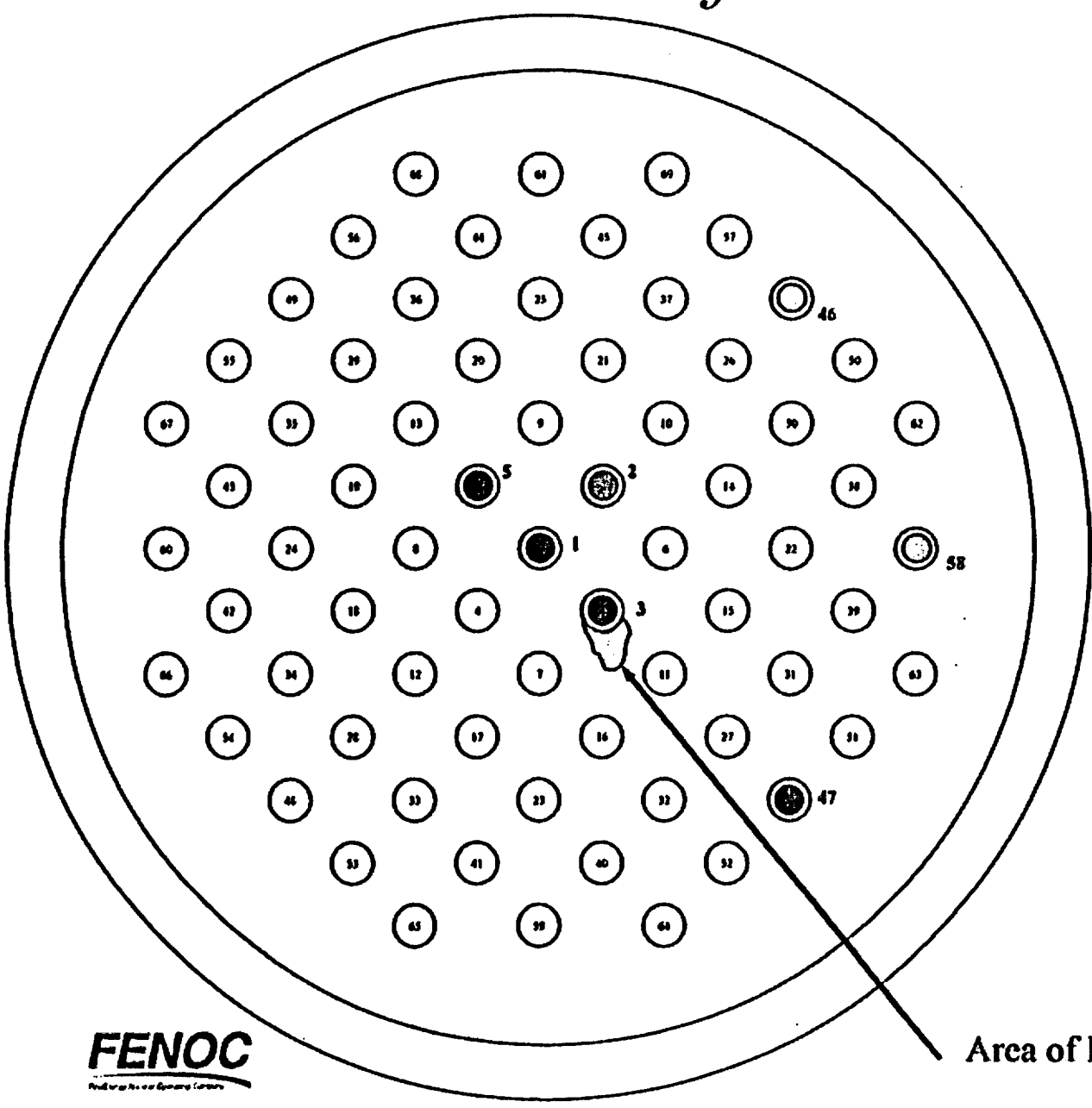

Nozzle with Axial Indication -

Nozzle with Axial and Circumferential Indication –

No flaw indication - ○

Area of Degradation

Nozzle 2 Corrosion Profile

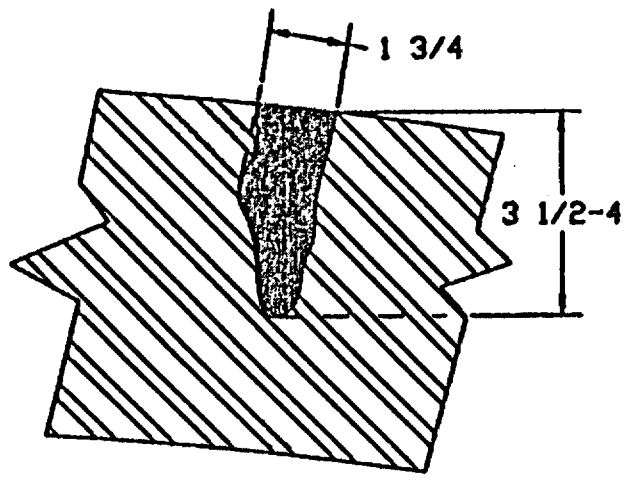

A-A

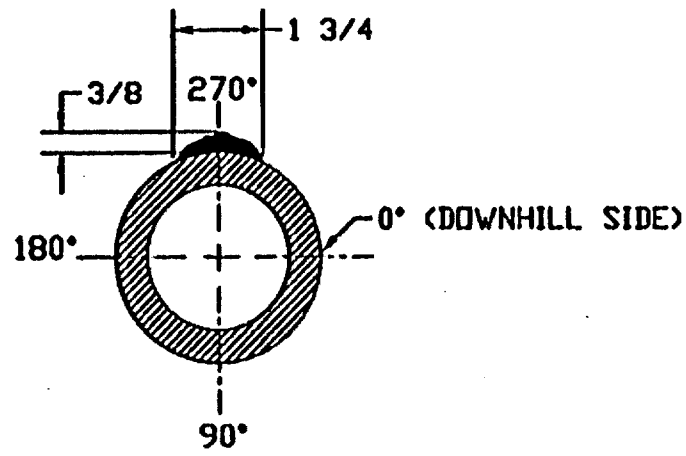

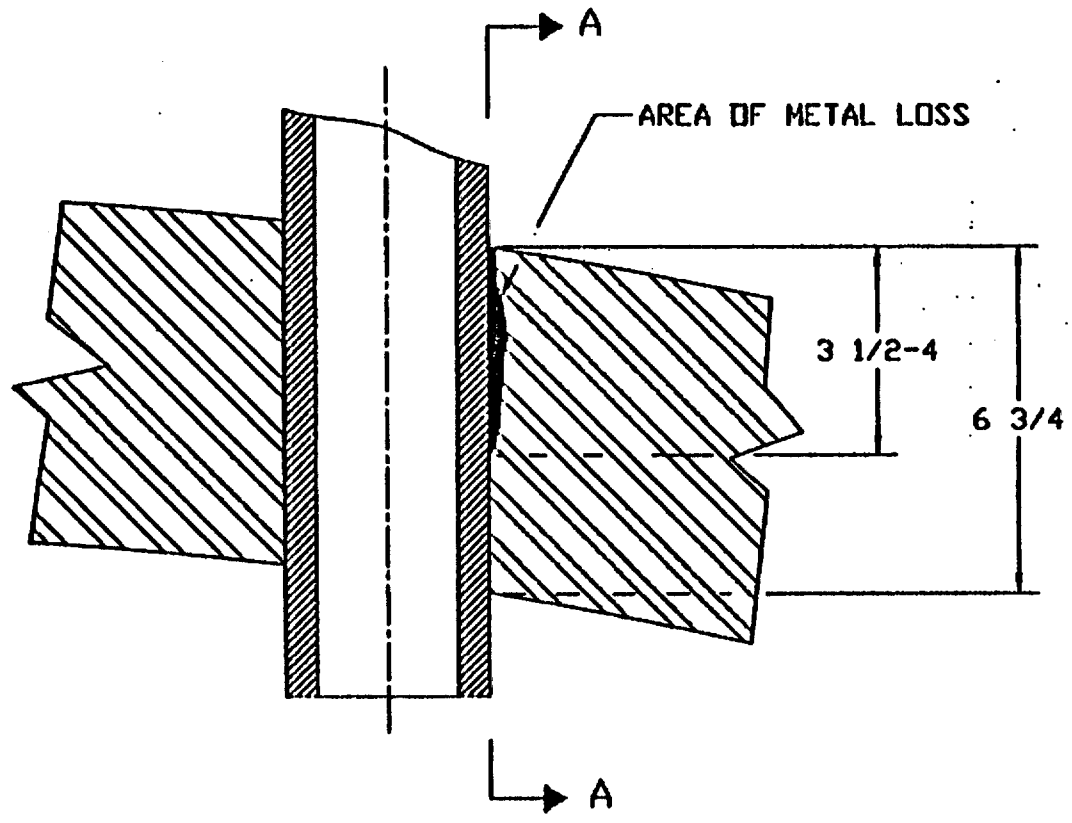

FENOC

Nozzle 3 Cavity

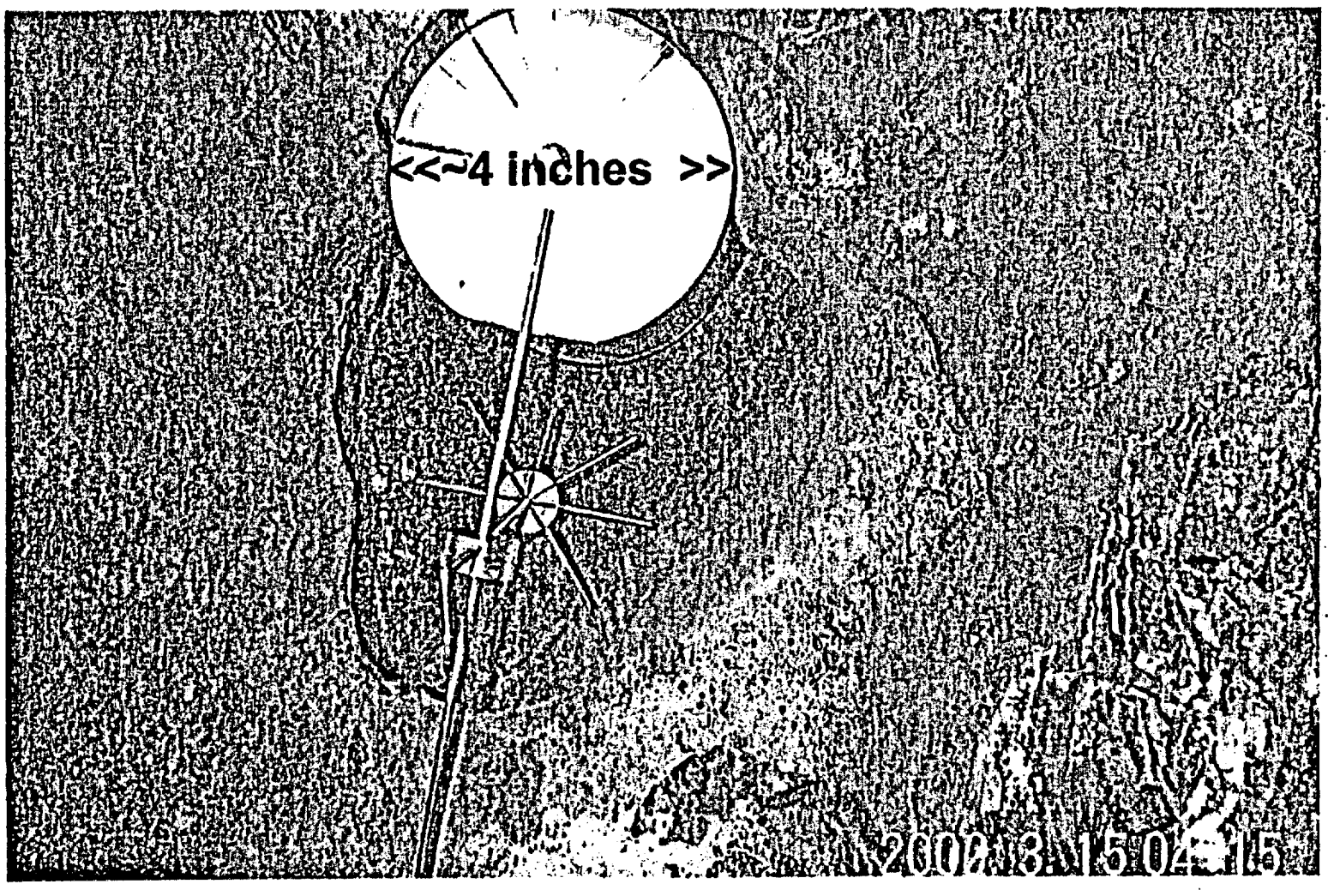

Root Cause Investigation

Steve Loehlein

Root Cause Investigation Team Leader

Root Cause Investigation Team

- Team included FENOC staff
  - Steve Loehlein, (Beaver Valley),Team Lead - BS, PE
  - Chuck Ackerman, (Davis-Besse) - BS
  - Ted Lang, (Davis-Besse) - MS, PE
  - Todd Pleune, (Davis-Besse) - PhD
  - Neil Morrison, (Beaver Valley) - BS

Root Cause Investigation Team

- Team augmented by industry experts from FirstEnergy, Framatome ANP, Dominion Engineering, and EPRI
  - Mark Bridavsky, FirstEnergy, Beta Labs - Failure Analysis Expert - PhD
  - Stephen Hunt, Dominion Engineering, Corrosion Expert - PE
  - Steve Fyfitch, Framatome ANP, Metallurgical Expert - MS
  - Christine King, EPRI, Material Reliability Program Manager

Key Questions

- Was there a new mechanism that caused this degradation?
- Was there adequate guidance/knowledge available to have prevented the degradation to the RPV closure head?

Key Conclusions

- The degradation to the RPV closure head was caused by Primary Water Stress Corrosion Cracking (PWSCC) of the Control Rod Drive (CRD) nozzle which led to leaks that were undetected allowing corrosion to occur
- The existing guidance/knowledge is adequate for understanding how to prevent RPV closure head degradation from any CRD nozzle leaks

Root Cause Analysis

- Purpose and Scope
- Root Cause Investigation
  - Data Gathering & Analysis
  - Timeline of Key Events
  - Crack Initiation, Leakage, and Conclusions
  - Corrosion Rates
- Causes

FENOC

Purpose and Scope of Investigation

- Determine root and contributing causes for RPV closure head degradation experienced at CRD nozzles 2 and 3
- Perform a prompt investigation to provide the stakeholders with potential impact and insights

Data Gathering

- Relevant data gathered
  - Condition Reports
  - System Engineer's System Performance Books
  - Photographs of degraded areas
  - Inspection results of degraded areas
  - Plant procedures and other station documents
  - Personnel interviews
  - Reference Documents (NRC, Vendor, INPO, EPRI)
  - Videotapes

Data Analysis

- Data sorted in chronological order to create a Sequence of Relevant Events matrix
- Timeline of Key Events created
- Events and Causal Factors Chart developed

Timeline of Key Events

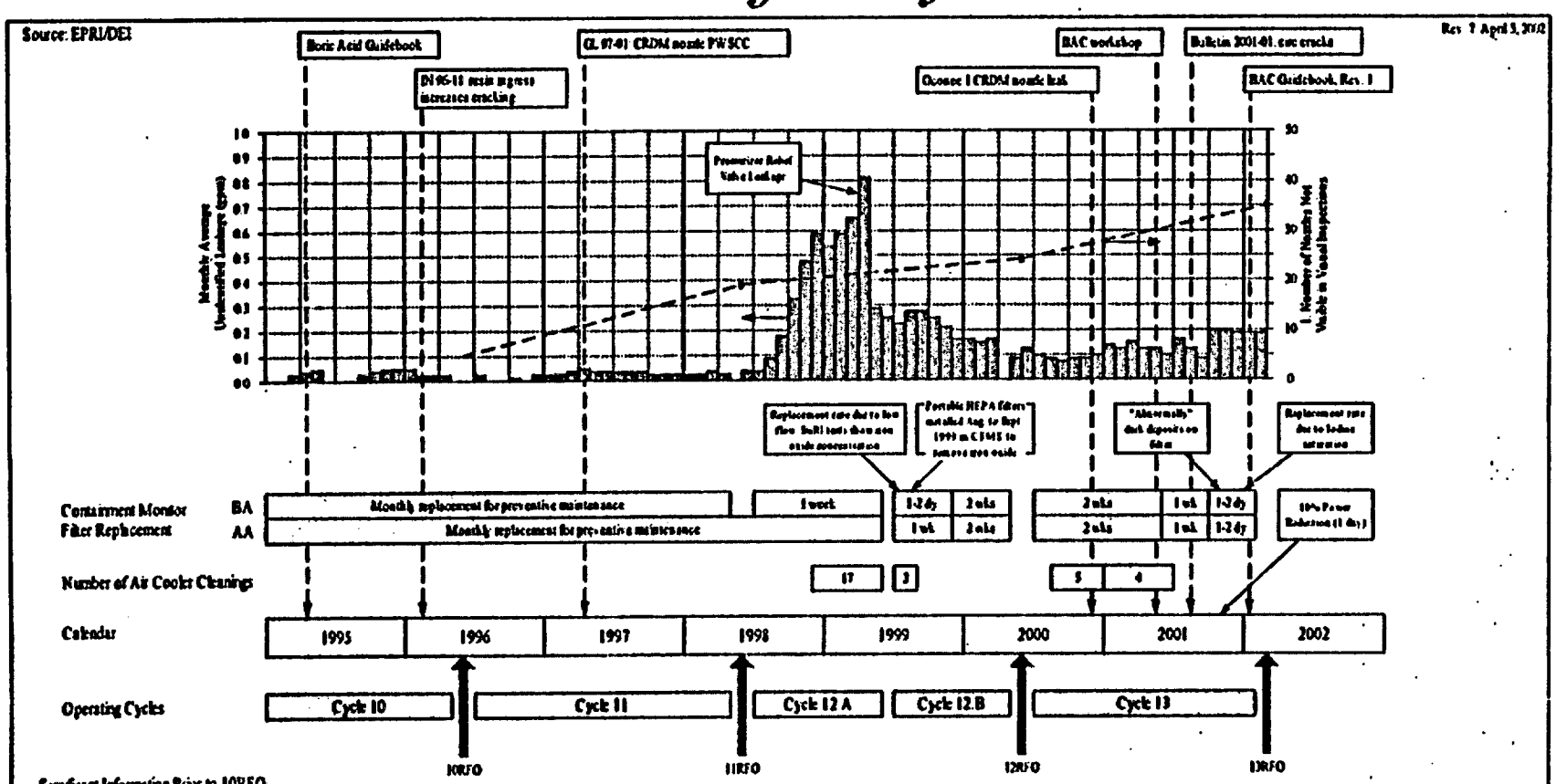

Figure 26. Timeline of Key Events Related to Reactor Vessel Head Boric Acid Corrosion

FENOC

PWSCC of Alloy 600 Materials

- Alloy 600 materials known to be susceptible to primary water stress corrosion cracking (PWSCC)
  - Both wrought and weld (Alloy 82/182 materials)
- Three main factors:
  - Susceptible material (composition, heat treatment)
  - High tensile stress (operational and residual)
  - Aggressive environment (primary water at high temperature)

Davis-Besse Control Rod Drive Nozzles

- Cracked CRD nozzles are Alloy 600 material with Alloy 82/182 J-groove welds
- Heat treatment of nozzles met code requirements (1600-1700 °F vs >1850 °F) [redacted]
- Nozzles 1 through 5 are from heat M3935
- Heat M3935 has experienced more leaks in B&W plants than other heats
- High residual tensile stress present adjacent to J-groove weld
- Higher operating temperature (605°F vs 601°F)
- No counterbore on nozzle penetrations
- Interference fit between nozzle and vessel by design

Conclusions Regarding Identified Cracking

- Cracking mechanism is PWSCC
  - Flaw characteristics found at Davis-Besse are similar to other plants with confirmed PWSCC
  - No factors indicating sulfide-induced intergranular stress corrosion cracking (IGSCC) due to chemistry transients
  - No other cracking mechanism deemed credible

Estimated Crack Propagation Timeframe

- Longest through-wall cracks estimated to have initiated in 1990 (+/- 3 years)
- Control rod drive nozzle thickness is 0.62 inch
- Estimated time for flaw to propagate through-wall is 4-6 years
- Consistent with proposed EPRI Material Reliability Program crack growth rate curve

Leakage From Cracked Nozzles

- Through-wall cracking in nozzle or J-groove weld leads to leaks in annulus region
- Leakage rate is a function of crack length above J-groove weld and degree of cracking through the weld
- Leakage rate increases significantly as crack lengthens above the J-groove weld due to increase in crack width
- Previous industry observations indicates very low leakage rates

Davis-Besse
Leakage Rate from Cracked Nozzle

- Davis-Besse axial cracks above weld were longer than reported from other plants (1.1 inches for nozzle 2 and 1.2 inches for nozzle 3)
- Analytical leakage predictions yield wide range of results (.025 to >1 gpm) depending on method and assumed geometry used
- Estimated leak rate based on boric acid deposits and unidentified leakage are in the range of 0.04 to 0.2 gpm

Nozzle 3 Crack Finite Element Model

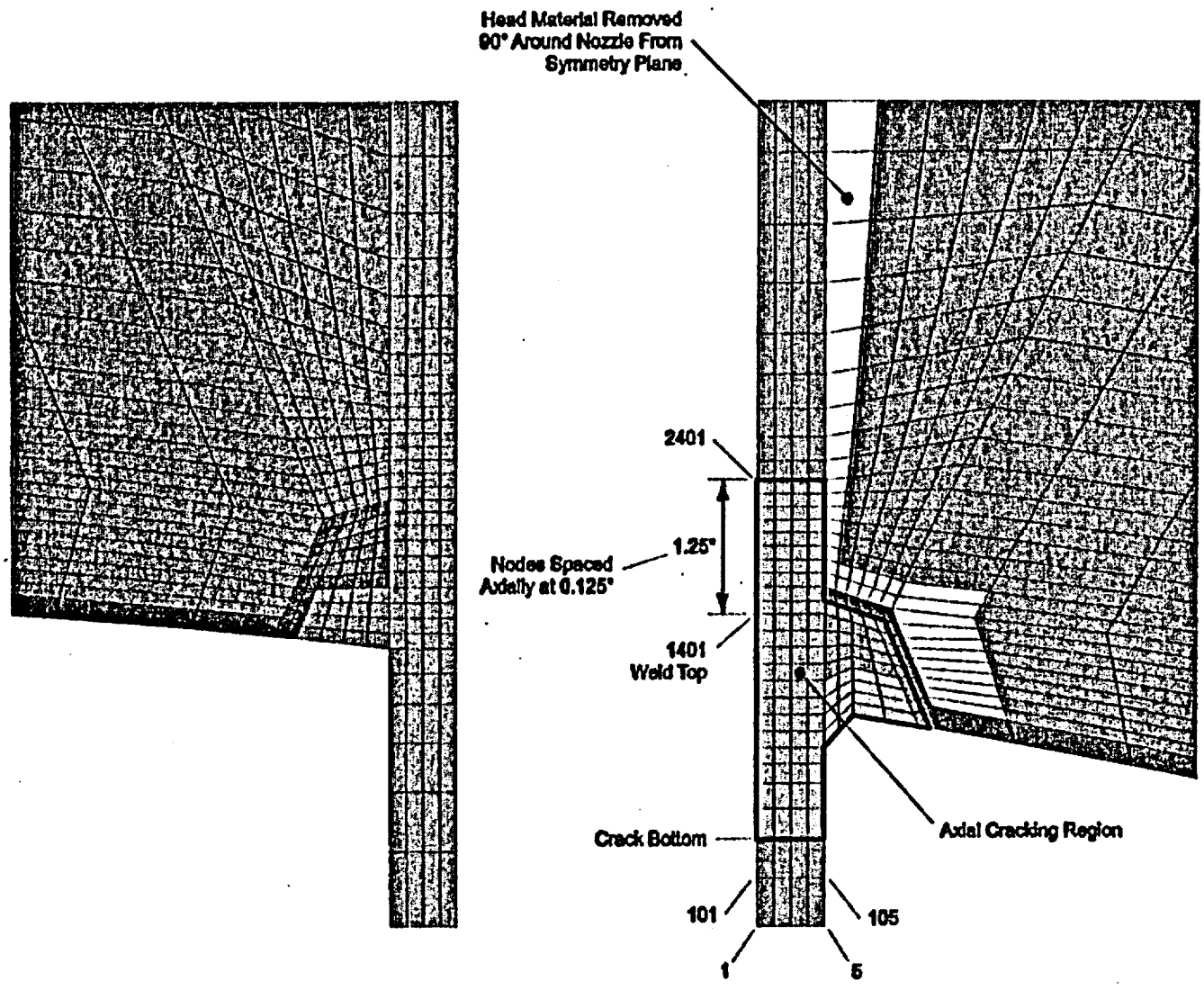

FENOC

Analytically Predicted Leak Rates

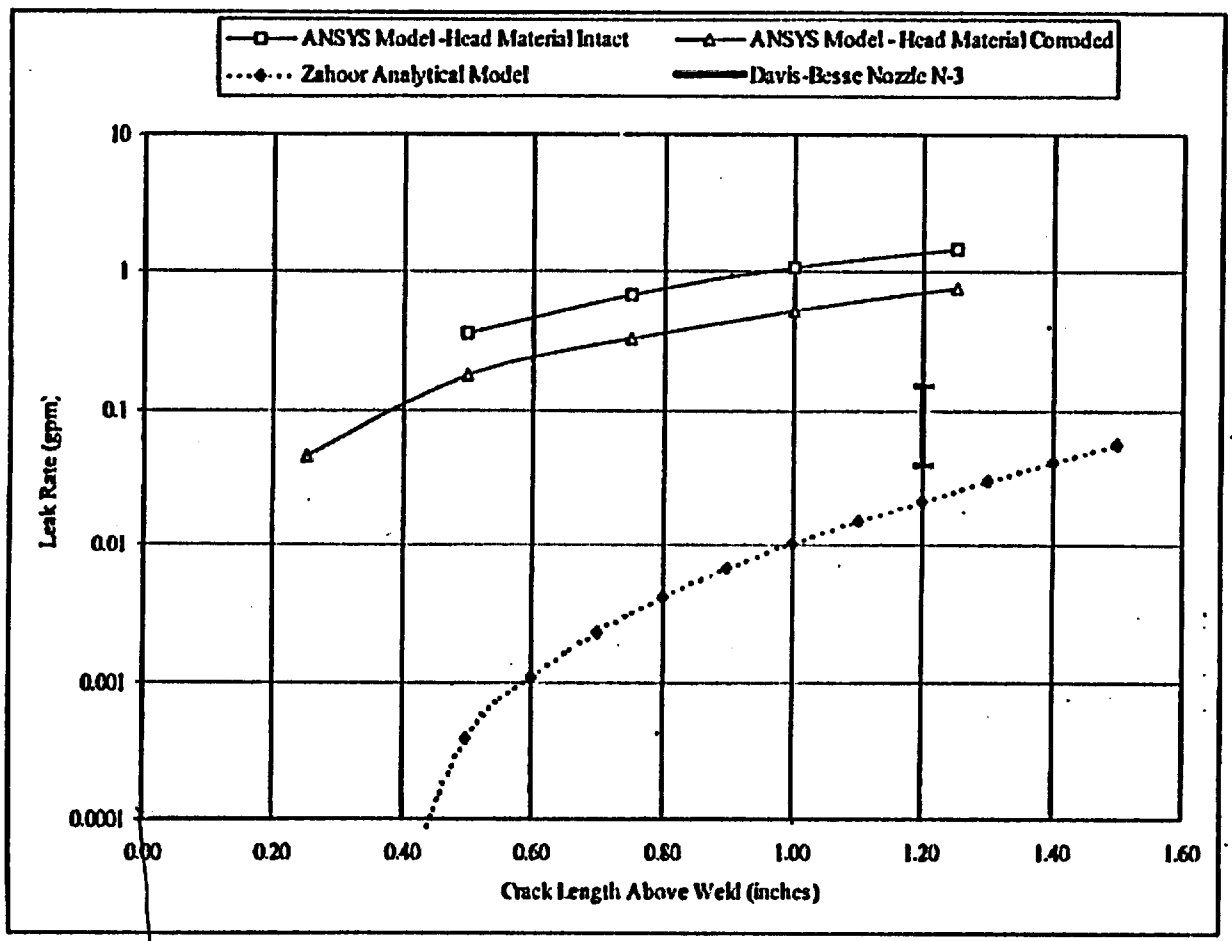

Leak Rate versus Crack Length

.000001

[redacted]

FENOC

Leakage Rate Conclusions

Estimated leakage rate from nozzle 3 crack is consistent with analytical predictions

Source of Corrosion

- Degradation at nozzle 2 and 3 is due to boric acid corrosion
- Boric acid corrosion is a known mechanism capable of producing such significant degradation
- There is a history of boric acid corrosion incidents on RPV heads in the industry

Degradation Sequence

Stage 1 - Crack Initiation Progression
Stage 2 - Minor Weepage / Latency Period
Stage 3 - Deep Annulus Corrosive Attack
Stage 4 - General Boric Acid Corrosion

Stage 1
Crack Initiation Progression

- Nozzle 3 cracks resulted from PWSCC
- Cracks grew at rate consistent with industry data
- RCS leakage miniscule

Stage 2

Minor Weepage/Latency Period

- Leakage entered annulus between Alloy 600 nozzle and low alloy steel RPV closure head
- Fit allowed capillary flow path
- Latency period could involve several mechanisms (e.g., steam cutting, flow accelerated corrosion, galvanic corrosion, and crevice corrosion)
- Annular gap increased due to localized corrosion resulting in leakage flow (residual and dry steam) reaching surface
- Leak rate controlled by number of cracks and size of cracks (length and width)

Stage 3 [redacted]

Deep Annulus Corrosive Attack

- Oxygen penetration in annulus increased due to decreasing velocity and differential pressure in annulus
- Preferential corrosion occurred in the vicinity of crack (consistent with EPRI-6 test)
- Exiting steam mass flow from annulus region not sufficient to wet surrounding areas
- Nozzle 2 progressed through this stage [redacted]

FENOC

Stage 4

General Boric Acid Corrosion

- Corrosion progression limited by crack growth rate and leakage through crack
- Annulus flooded with moist steam
- Boric acid accumulates on head
- Increased leakage provides localized cooling of head allowing greater wetted area
- Affected area governed by thermodynamics and material properties (e.g., viscosity, density, slope)
- General corrosion of oxygenated surface

FENOC

[redacted]

Corrosion Rates From Industry Testing

EPRI and industry testing (effect of boric acid on low alloy steel) demonstrates corrosion rates of 0.6 to 5.0 inches per year

- Test was performed using deaerated, high-temperature water (600°F)
- Orientation, geometry and materials simulated RPV head nozzles
- Flow rates of 0.01 and 0.10 gpm used in test

[redacted]

Davis-Besse
Estimated Reactor Vessel Closure Head Corrosion Rates

- 4 years of stage 4 corrosion
- Maximum radial progression ~7 inches
- Average rate ~2 inches per year
- Lateral direction corrosion rate ~1/2 that of axial direction
- Consistent with EPRI Boric Acid Corrosion Guidebook

Probable Timeline

- 1990 (+/- 3yrs) Nozzle 3 cracking initiated
- 1994-1996 Nozzle 3 cracking propagates through-wall
- 1998 and 2000 Nozzle leak not identified
- 2002 Corrosion discovered at nozzle 3, minor degradation at nozzle 2

Root Cause Summary

Inadequate inspection of the RPV closure head prevented early detection of nozzle leakage, resulting in prolonged boric acid corrosion and significant degradation.

Root Cause Confirmation

- Phases 1 and 2
  - Samples contain iron oxide
  - Chemical form of boric acid
- Phase 3
  - Rule out IGSCC
  - Characterization of nozzle 3 cavity

Root Cause Confirmation

- Sample Phase 1
  - Corrosion products/boric acid deposits from top of head
  - Deposits scraped from CRD nozzle 3 below the flange
- Sample Phase 2
  - Corrosion products/boric acid deposits from nozzle 2 removal
- Sample Phase 3
  - Nozzle 3 and nozzle 3 corrosion area
  - Nozzle 2
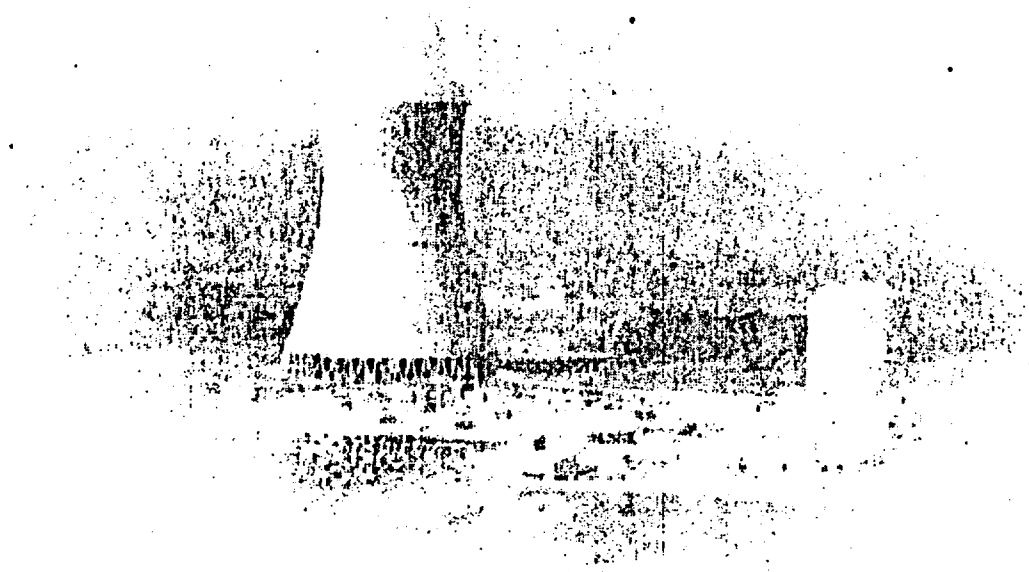
Concluding Remarks