NMC
Committed to Nuclear Excellence

Prairie Island Nuclear Generating Plant
Operated by Nuclear Management Company, LLC

L-PI-03-030
10CFR50.55a

April 4, 2003

U S Nuclear Regulatory Commission
ATTN: Document Control Desk
Washington, DC 20555

PRAIRIE ISLAND NUCLEAR GENERATING PLANT
DOCKET NOS. 50-282 AND 50-306
LICENSE NOS. DPR-42 AND DPR-60
UNIT 2 STEAM GENERATOR (#22) AND PRESSURIZER FLAW EVALUATIONS

During the Unit 2 refueling outage in February-March 2002, ultrasonic examinations of steam generator #22 and the pressurizer were performed in accordance with American Society of Mechanical Engineers (ASME) Boiler and Pressure Vessel Code Section XI. The third interval plan for Prairie Island was written to conform examination of Class 1, 2, and 3 components to the 1989 edition, no addenda, of ASME Section XI.

For steam generator #22, third period, third interval examinations were done to satisfy the follow-up requirements according to IWB-2420 for flaws identified during the first period, third interval and submitted for NRC review on May 6, 1997 and during the second period, third interval and submitted for NRC review on May 13, 1999. During the follow-up examinations, sixteen flaws identified in the tubesheet to channel head weld region exceeded the allowable flaw size when evaluated against the standards provided in ASME Section XI, IWB-3500. Accordingly, we performed analytical evaluations of these flaws per ASME Section XI, IWB-3610. These flaws were found acceptable per these analyses. Attached for your review are the results of these evaluations.

For the pressurizer, examinations were done to satisfy the base examination requirements for the third period of the third interval. During the examination, one indication was identified in the bottom head to shell weld region which exceeded the allowable flaw size when evaluated against the standards provided in ASME Section XI, IWB-3500. Accordingly, we performed an analytical evaluation of this flaw per ASME Section XI, IWB-3610. This flaw was found acceptable per this analysis. Attached for your review are the results of this evaluation.

The procedure used for these evaluations is contained in WCAP-14166, which was approved by the NRC by letter dated September 6, 1995, addressed to Mr. Roger O. Anderson, Northern States Power Company.

1717 Wakonade Drive East • Welch, Minnesota 55089-9642
Telephone: 651.388.1121

A047

This letter contains no new commitments and no revisions to existing commitments.

Please contact Jack Leveille (651-388-1121) if you have any questions related to this letter.

Scott Northard for

Joseph M. Solymossy
Site Vice President, Prairie Island Nuclear Generating Plant

CC Regional Administrator, USNRC, Region III
Project Manager, Prairie Island Nuclear Generating Plant, USNRC, NRR
NRC Resident Inspector – Prairie Island Nuclear Generating Plant

Attachments:
1. UT Vessel Examination, Outage No: PI2RF2002, Report No: 2002U010
2. UT Vessel Examination, Outage No: PI2RF2002, Report No: 2002U021

ATTACHMENT 1

NUCLEAR MANAGEMENT COMPANY, LLC
PRAIRIE ISLAND NUCLEAR GENERATING PLANT, UNIT 2
DOCKET NO. 50-306 LICENSE NO. DPR-60

LETTER NO. L-PI-03-030

UT Vessel Examination, Outage No: PI2RF2002, Report No: 2002U010

121 pages follow

REPORT# _____

UT Vessel Examination

Site/Unit:	NMC / PI2	Procedure:	ISI-UT-3	Outage No.:	PI2RF2002
Summary No.:	502618	Procedure Revision/FC:	9 / ---	Report No.:	2002U010
Workscope:	ISI	Work Order No.:	0106946	Page:	1 of 7

Code: 1989 Code Cat.: B-B Location: SG 22

Drawing No.: 2-ISI- 37B Description: Tube Sheet to Head

System ID: SG

Component ID: W-A Size/Length: 426" Thickness/Diameter: 5.50" / 135.67"

Limitations: Welded 2" x 2" pads and insulation rings. Start Time: * Finish Time: *

Examination Surface: Inside ☐ Outside ☑ Surface Condition: Ground Flush

Lo Location: Centerline of Hot Leg Wo Location: Centerline of Weld Couplant: Sonotrace 40 Batch No.. #00143

Temp. Tool Mfg.: Telatemp Serial No.: NSP 179 Surface Temp.: 87 °F

Cal. Sheet No.: 2002CA005, 2002CA006, 2002CA010

Angle Used	0	45	45T	60	60T	
Scanning dB	37.0	53.0	53.0	64.9	64.9	

Indication(s): Yes ☑ No ☐ Scan Coverage: Upstream ☑ Downstream ☑ CW ☑ CCW ☑

Comments:

See previous datasheets for scan limitations. * 0 Degree and 45 degree exam performed on 2/05/2002, 1300 to 1600. 60 Degree exam performed on 2/06/2002, 1245 to 1640.

Results: NAD ☐ IND ☑ GEO ☐

Percent Of Coverage Obtained > 90%: Yes Reviewed Previous Data: Yes

Examiner Level II Thomas, Travis	Signature Travis Thomas	Date 2/6/2002	Reviewer Clay, Sean P.	Signature Lv III	Date 2-15-02
Examiner Level II Knott, Brian	Signature Brian O. Knott	Date 2/6/2002	Site Review Wren, Jerry P.	Signature Jerry P. Wren	Date 2-15-02
Other Level N/A N/A	Signature	Date	ANII Review Clow, Ron	Signature	Date 2/21/02

REPORT# _____

Ultrasonic Indication Report

Site/Unit:	NMC / PI2	Procedure:	ISI-UT-3	Outage No.:	PI2RF2002
Summary No.:	502618	Procedure Revision/FC:	9 / ---	Report No.:	2002U010
Workscope:	ISI	Work Order No.:	0106946	Page:	2 of 7

Search Unit Angle: 45 & 60 Degree °

Wo Location: Centerline of Weld

Lo Location: Centerline of Hot Leg

- ○ Piping Welds
- ◉ Ferritic Vessels ≥ 2"T
- ○ Other _____

MP	Metal Path	Wmax	Distance From Wo To S.U. At Maximum Response
RBR	Remaining Back Reflection	W1	Distance From Wo At 20% Of Max (Forward)
L	Distance From Datum	W2	Distance From Wo At 20% Of Max (Forward)

Comments: None

Scan #	Indication No.	% Of DAC	W Max W	W Max MP	Forward Of Max W1	Forward Of Max MP	Backward Of Max W2	Backward Of Max MP	L1 Of Max	L Max	L2 Of Max	RBR Amp.	Remarks
													45 DEGREE SCAN
4	1	28%	95.0	1.918	94.2	1.413	95.7	2.372	.75	1.0	1.2	N/A	Skewed towards head side approximately 20 degrees.
4	2	45%	111.1	3.633	110.6	3.178	112.1	4.291	.4	.9	1.2	N/A	Skewed towards head side approximately 20 degrees.
4	3	80%	179.0	6.368	178.3	6.064	179.3	6.756	.4	.5	.95	N/A	Tube Sheet Side
3	4	55%	212.0	4.688	205.4	4.240	204.03	5.090	2.3	2.9	3.6	N/A	Head Side
3	5	50%	235.5	4.442	236.4	3.939	234.8	4.949	2.4	3.0	3.5	N/A	Head Side
3	6	68%	329.9	3.888	330.9	2.827	328.9	4.344	2.4	2.6	3.6	N/A	Head Side
4	7	26%	351.5	2.120	351.1	1.918	351.9	2.474	1.5	2.3	2.5	N/A	Head Side
3	8	85%	360.05	4.894	361.0	4.591	359.5	5.505	2.2	2.4	3.0	N/A	Skewed towards head side approximately 20 degrees.

Examiner Level II Thomas, Travis /	Signature Travis Thomas	Date 2/6/2002	Reviewer Clay, Sean P. /	Signature Lv III	Date 2-15-02
Examiner Level II Knott, Brian /	Signature Brian A. Knott	Date 2/6/2002	Site Review Wren, Jerry P. /	Signature	Date 2-16-02
Other Level N/A N/A /	Signature	Date	ANII Review Clow, Ron /	Signature	Date 2/21/02

REPORT# _____

Supplemental Report

Report No.: 2002U010

Page: 3 of 7

Summary No.: 502618

Examiner:	Thomas, Travis	Level:	II	Reviewer:	Clay, Sean P.	Date:	2-15-02
Examiner:	Knott, Brian	Level:	II	Site Review:	Wren, Jerry P.	Date:	2-16-02
Other:	N/A	Level:	N/A	ANII Review:	Clow, Ron	Date:	2/21/02

Comments. **See previous data sheets 97-0136R2, 97-0135R1 and 97-0136R2 for scan limitations.**

Sketch or Photo: G:\DDEAL50\PI2RFO2002\SUPPLEMENTAL UT\2002u010_1.bmp

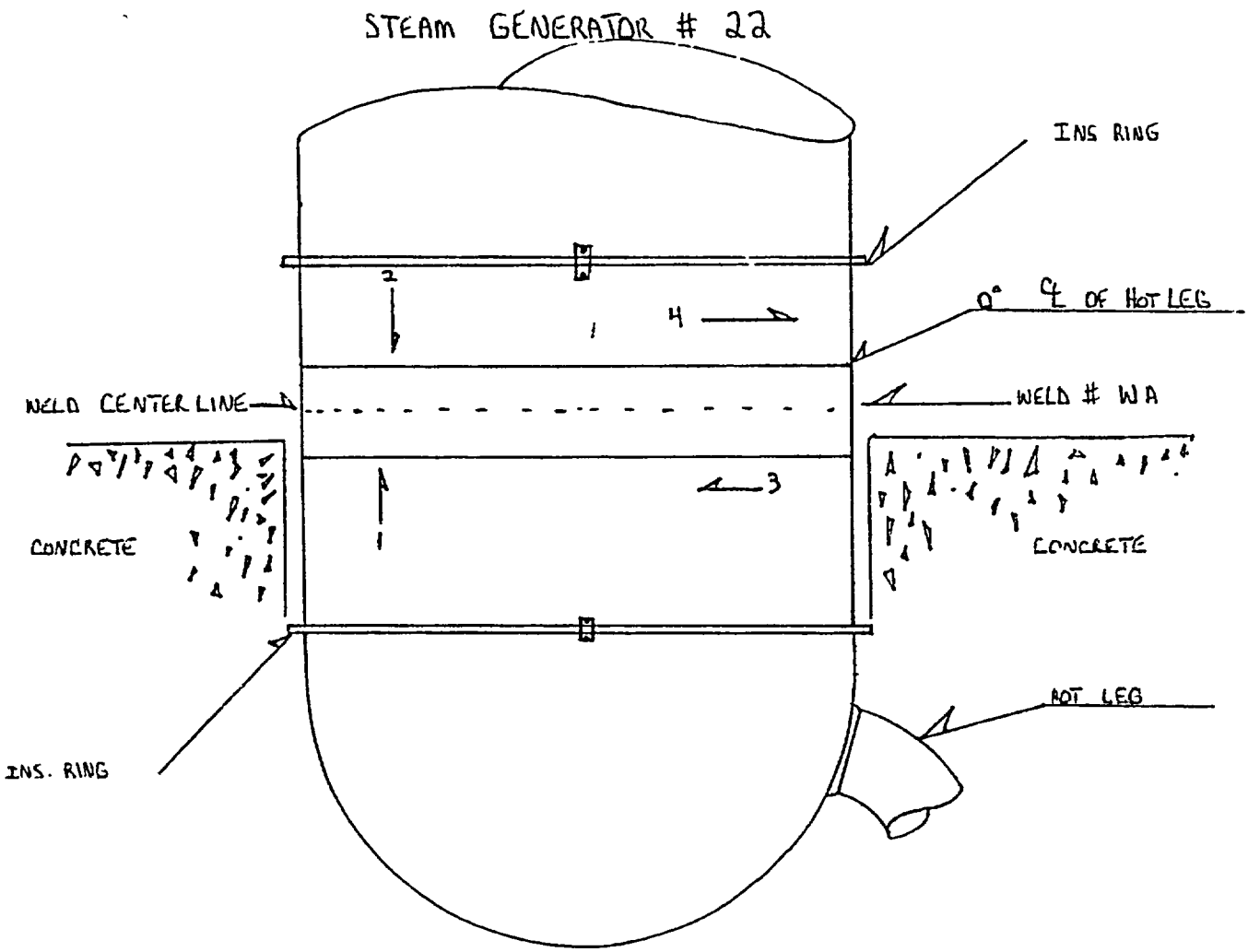

REPORT# _____

Determination of Percent Coverage for UT Examinations - Vessels

Site/Unit:	NMC / PI2	Procedure:	ISI-UT-3	Outage No.:	PI2RF2002
Summary No.:	502618	Procedure Revision/FC:	9 / ---	Report No.:	2002U010
Workscope:	ISI	Work Order No.:	0106946	Page:	4 of 7

0 deg Planar

Scan 100.000 % Length X 95.600 % volume of length / 100 = 95.600 % total for 0 deg

45 deg

Scan 1 100.000 % Length X 98.400 % volume of length / 100 = 98.400 % total for Scan 1

Scan 2 100.000 % Length X 97.600 % volume of length / 100 = 97.600 % total for Scan 2

Scan 3 100.000 % Length X 100.000 % volume of length / 100 = 100.000 % total for Scan 3

Scan 4 100.000 % Length X 100.000 % volume of length / 100 = 100.000 % total for Scan 4

Add totals and divide by # scans = 99.000 % total for 45 deg

Other deg 60

Scan 1 100.000 % Length X 98.400 % volume of length / 100 = 98.400 % total for Scan 1

Scan 2 100.000 % Length X 86.700 % volume of length / 100 = 86.700 % total for Scan 2

Scan 3 100.000 % Length X 100.000 % volume of length / 100 = 100.000 % total for Scan 3

Scan 4 100.000 % Length X 100.000 % volume of length / 100 = 100.000 % total for Scan 4

Add totals and divide by # scans = 96.275 % total for 60 deg

Percent complete coverage

Add totals for each angle and scan required and divide by # of angles to determine;

96.958 % Total for complete exam

Note:

Supplemental coverage may be achieved by use of other angles / methods. When used, the coverage for volume not obtained with angles as noted above shall be calculated and added to the total to provide the percent total for the complete examination.

Site Field Supervisor: Jerry Wren Date: 2-16-02

REPORT# _____

ISI Flaw Sizing Worksheet

Site/Unit:	NMC / PI2	Procedure:	ISI-UT-3	Outage No.:	PI2RF2002
Summary No.:	502618	Procedure Revision/FC:	9 / ---	Report No.:	2002U010
Workscope:	ISI	Work Order No.:	0106946	Page:	5 of 7

1) Flaw Number: See Attached
2) Item Number: B2.40
3) ISI Interval: 3rd Interval — ○ OK Reviewer _____
4) Code Edition & Addenda: 89 no addenda — ○ OK Reviewer _____
5) Method: UT
6) Flaw Sketch (See Below) — ○ OK Reviewer _____

Flaw View

7) Calculations ○ OK Reviewer _____

Show determination of Surface or Subsurface
See Attached Sheets for Indications 45 Deg. 1 through 13 and 60 Deg. 1 through 13.

Show determination of type of "a" to use
See Attached Sheets for Indications 45 Deg. 1 through 13 and 60 Deg. 1 through 13.

8) ISI-FE-1 Paragraph 7.0 - "Rounding-off Method" was used ○ Yes Preparer _____ ○ OK Reviewer _____

9) Code Flaw Dimensions ○ OK Reviewer _____
"l" = _____ "a" = _____ "t *nominal*" = _____ "t *measured*" = _____ "s" = _____ "w" = _____

10) Flaw Type ○ OK Reviewer _____ Subsurface Planar (UT/RT)

11) Flaw Characterization Figure ○ OK Reviewer _____ _____

12) Flaw Characterization Figure Number _____

13) Was IWA-3300 Flaw Characterization followed? ◉ Yes ○ No If no, why?

14) The correct Code Edition and Addenda was available and used. ○ Yes Preparer _____ ○ OK Reviewer _____

15) Prepared by and date
Sean P. Clay _____ _____
The results are correct and the methodology used is in accordance with applicable codes, standards, specifications and procedures.

16) Review by and date
Jerry P. Wren _____ _____
The review assures that the results are correct and the methodology used is in accordance with applicable codes, standards, specifications and procedures.

REPORT# _____

ISI Flaw Disposition Worksheet

Site/Unit:	NMC / PI2	Procedure:	ISI-UT-3	Outage No.:	PI2RF2002
Summary No :	502618	Procedure Revision/FC:	9 / ---	Report No.:	2002U010 SR
Workscope:	ISI	Work Order No.:	0106946	Page:	6 of 87

2-1502

1) Flaw Number	***	3) ISI Interval	3rd Interval	○ OK Reviewer	_____
2) Item Number	B2.40	4) Code Edition & Addenda	89 no addenda	○ OK Reviewer	_____
		5) Acceptance Standard	_____	○ OK Reviewer	_____
		6) Calculations (See Below)		○ OK Reviewer	_____

***** See attached sheets for flaw dispositions on 45 deg. Indications 1 through 13 and 60 deg. 1 through 13.**

7) Results ○ OK Reviewer _____

a/l = _____ Code allowable a/t% = _____ Calculated a/t% = _____ Laminar flaw surface area: (0.75 l w) = _____

8) Table used for analysis ○ OK Reviewer _____ _____

9) Was linear interpolation used? ◉ Yes ○ No If no, why?

_____

10) Was IWA-3200 Significant Digits For Limiting Values followed? ◉ Yes ○ No If no, why?

_____

11) The correct Code Edition and Addenda was available and used. ○ Yes Preparer _____ ○ OK Reviewer _____

12) Statement of acceptability or rejectability with basis. ○ OK Reviewer _____ ◉ Accept ○ Reject

- ○ (a/t) Code allowable > (a/t) calculated
- ○ OEM flaw evaluation handbook (see attached analysis)
- ○ (a/t) Code allowable < (a/t) calculated

13) Prepared by and date

_____ _____

The results are correct and the methodology used is in accordance with applicable codes, standards, specifications and procedures.

14) Engineering review by and date

_____ _____

This review assures that the results are correct and the methodology used is in accordance with applicable codes, standards, specifications and procedures

15) Approved by and date

_____ _____

This approval assures that all involved with this flaw sizing and flaw disposition were aware of the necessity that the results and the methodology are correct and in accordance with applicable codes, standards, specifications and procedures.

Ultrasonic Indication Report Continuation

Site/Unit:	NMC / PI2	Procedure:	ISI-UT-3	Outage No.:	PI2RF2002
Summary No.:	502618	Procedure Revision/FC:	9 / ---	Report No.:	2002U010
Workscope:	ISI	Work Order No.:	0106946	Page:	7 of 7

Scan #	Indication No.	% Of DAC	W Max W	W Max MP	Forward Of Max W1	Forward Of Max MP	Backward Of Max W2	Backward Of Max MP	L1 Of Max	L Max	L2 Of Max	RBR Amp.	Remarks
3	9	28%	364.6	2.976	364.9	2.776	364.4	3.178	1.5	1.7	1.9	N/A	Skewed towards head side approximately 20 degrees.
3	10	25%	365.0	1.967	365.4	1.816	364.4	2.372	1.0	1.3	1.8	N/A	Head Side
4	11	28%	389.3	7.079	389.0	6.860	389.8	7.434	3.3	3.6	4.2	N/A	Head Side
3	12	30%	390.0	5.903	390.5	5.605	387.5	6.786	1.7	2.5	2.7	N/A	Head Side
3	13	60%	388.0	7.222	388.4	7.023	387.5	7.725	2.4	2.5	3.5	N/A	Skewed towards head side approximately 20 degrees.
2	14	100%+	8.3	7.932	6.9	7.864	10.5	9.850	*	*	*	N/A	* Tube sheet geometry 360 degrees intermittent.
													60 DEGREE SCAN
4	1	118%	95.75	2.16	95.00	1.75	96.07	3.08	1.9	2.2	2.7	N/A	
4	2	40%	118.0	5.07	117.7	4.58	119.1	5.41	3.0	3.3	3.8	N/A	
3	3	38%	139.2	6.74	140.2	5.91	138.0	7.65	.2	0.0	.2	N/A	
3	4	68%	136.5	5.08	137.2	4.50	136.2	5.41	3.6	4.0	4.5	N/A	
4	5	40%	213.5	2.83	213.0	2.33	214.7	3.99	2.2	2.4	3.2	N/A	
4	6	25%	308.4	4.49	307.7	3.99	309.5	5.50	2.1	2.3	2.9	N/A	
3	7	31%	328.0	5.24	328.5	4.74	327.1	5.80	2.3	2.5	3.2	N/A	
3	8	25%	344.1	7.08	346.1	6.66	342.0	8.99	1.8	2.0	2.2	N/A	
3	9	92%	2.90	6.74	2.10	5.66	4.00	7.57	364.5	365.2	365.8	N/A	
4	10	45%	364.4	4.25	363.8	3.83	364.9	4.83	.9	1.3	1.9	N/A	
4	11	65%	390.5	9.24	390.1	9.04	390.9	9.83	1.8	2.2	2.4	N/A	
3	12	53%	385.0	10.65	385.4	10.31	384.07	10.97	2.0	2.2	2.4	N/A	
4	13	50%	395.6	1.75	394.5	.99	396.0	2.41	.08	1.1	1.3	N/A	
4	14	25%	387.6	6.66	*	*	*	*	*	1.0	*	N/A	* Spot Indication

Examiner	Level II	Signature	Date	Reviewer		Signature	Date
Thomas, Travis	/	Travis Thomas	2/6/2002	Clay, Sean P.	/	Lv III	2-15-02
Examiner	Level II	Signature	Date	Site Review		Signature	Date
Knott, Brian	/	Brian A. Knott	2/6/2002	Wren, Jerry P.	/	Jerry P. Wren	2-16-02
Other	Level N/A	Signature	Date	ANII Review		Signature	Date
N/A	/			Clow, Ron	/		2/21/02

ISI Flaw Sizing Worksheet

Site/Unit:	NMC / PI2	Procedure:	ISI-UT-3	Outage No.:	PI2RF2002
Summary No.:	502618	Procedure Revision/FC:	9 / ---	Report No.:	2002U010
Workscope:	ISI	Work Order No.:	0106946	Page:	___ of ___

1) Flaw Number 1 45°
2) Item Number B2 40
3) ISI Interval 3rd Interval ⊗ OK Reviewer SPW
4) Code Edition & Addenda 89 no addenda ⊗ OK Reviewer SPW
5) Method UT
6) Flaw Sketch (See Below) ⊗ OK Reviewer SPW

Flaw View

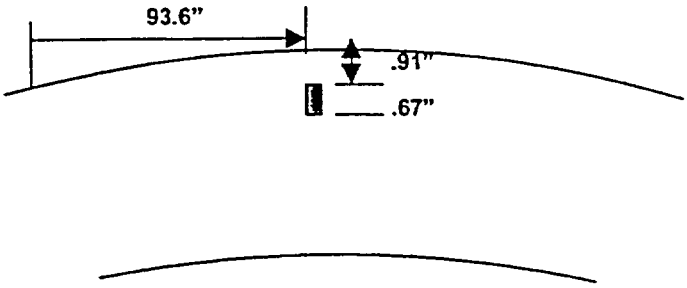

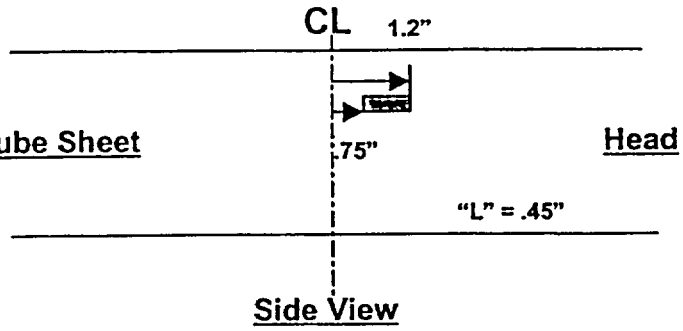

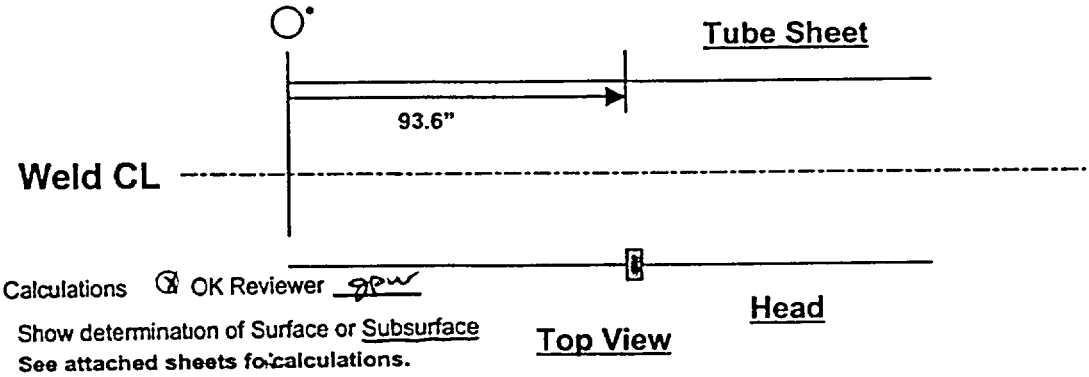

7) Calculations ⊗ OK Reviewer SPW

Show determination of Surface or Subsurface
See attached sheets for calculations.

Show determination of type of "a" to use
See attached sheets for calculations.

8) ISI-FE-1 Paragraph ~~2.0~~ 6.1 - "Rounding-off Method" was used ⊙ Yes Preparer SPC ⊗ OK Reviewer SPW
9) Code Flaw Dimensions ⊗ OK Reviewer SPW
"l" = .70" "a" = .35" "t *nominal*" = N/A "t *measured*" = 5.5 "s" = .90 "w" = N/A
10) Flaw Type ⊗ OK Reviewer SPW Subsurface Planar (UT/RT)
11) Flaw Characterization Figure ⊗ OK Reviewer SPW IWA-3320-1
12) Flaw Characterization Figure Number FLAW #3
13) Was IWA-3300 Flaw Characterization followed? ⊙ Yes ○ No If no, why?

14) The correct Code Edition and Addenda was available and used. ⊙ Yes Preparer SPC ⊗ OK Reviewer SPW

15) Prepared by and date
SPAN P. CLAY 2-10-02
The results are correct and the methodology used is in accordance with applicable codes, standards, specifications and procedures.

16) Review by and date SPW
The review assures that the results are correct and the methodology used is in accordance with applicable codes, standards, specifications and procedures.

NMC

ISI Flaw Disposition Worksheet

Site/Unit: NMC1 PI2 | Procedure: ISI-UT-3 | Outage No: P12 RF 2002
Summary No.: 502618 | Procedure Revision/FC: 9 1 | Report No: 20024010
Workscope: ISI | Work Order No.: 0106946 | Page: ____ of ____

1) Flaw Number #1
2) Item Number B-B B2.40
3) ISI Interval 3rd.
4) Code Edition & Addenda 1989 No addenda
5) Acceptance Standard IWB-3510
6) Calculations (See Below)

✓ OK Reviewer KJL
✓ OK Reviewer KJL
✓ OK Reviewer KJL
✓ OK Reviewer KJL

$\ell = .70$ $t = 5.5''$
$a = .35''$ $S = .90$

Flaw is subsurface. $a/\ell = \frac{.35}{.70} = .50$ FROM TABLE IWB-3510-1

$a/t\%_{allow} = 7.6\%$ subsurface flaw $\gamma = 1$ $a/t\%_{allow} = 7.6\%$

$a/t_{actual} = \frac{.35''}{5.5''} = .064$ $a/t\%_{act} = 6.4\%$

$a/t\%_{allowed} > a/t\%_{actual}$ $7.6\% > 6.4\%$

7) Results ✓ OK Reviewer KJL
a/l = .50 Code allowable a/t% = 7.6% Calculated a/t% = 6.4% Laminar flaw surface area: (0.75 | w) = N/A
8) Table used for analysis ✓ OK Reviewer KJL IWB-3510-1
9) Was linear interpolation used? ○ Yes ● No If no, why?
DIRECT FROM TABLE.
10) Was IWA-3200 Significant Digits For Limiting Values followed? ● Yes ○ No If no, why?

11) The correct Code Edition and Addenda was available and used. ● Yes Preparer DSW ✓ OK Reviewer KJL
12) Statement of acceptability or rejectability with basis. ✓ OK Reviewer KJL ● Accept ○ Reject
- ● (a/t) Code allowable > (a/t) calculated
- ○ OEM flaw evaluation handbook (see attached analysis)
- ○ (a/t) Code allowable < (a/t) calculated

13) Prepared by and date Daniel A Whitt 2-11-2001
The results are correct and the methodology used is in accordance with applicable codes, standards, specifications and procedures.

14) Engineering review by and date Ken LeGoff 2-13-02
This review assures that the results are correct and the methodology used is in accordance with applicable codes, standards, specifications and procedures.

15) Approved by and date Maria Vik 2/13/2002
This approval assures that all involved with this flaw sizing and flaw disposition were aware of the necessity that the results and the methodology are correct and in accordance with applicable codes, standards, specifications and procedures.

Flaw Sizing Calculations Using Metal Path for Vessel Welds > 2"

For surface and subsurface single planar flaws oriented in plane normal to pressure retaining surface

ASME SECT XI 1989 W/ NO ADDENDA SPC INITIAL TO VERIFY

ISI Report # 2002U010 Evaluation Performed By: S. Clay Date: 02/10/02
Flaw # #1 Reviewed By: J. Wren Date: 02/10/02

Length
Length of the flaw "*l*" is determined by finding the difference between L1 and L2 for perpendicular scans, W1 and W2 for parallel scans.
L and W values are from page 2 of the UT report.
l = .75" (L2) - 1.20" (L1) = -.45" inches.

Thickness
Thickness of the component at the location of the flaw, using UT or nom wall (circle one).
This value is from page 1 of the UT report.
"t" = 5.50 inches

Calibration
The measured angle in the calibration block was 46° degrees

Calculations using metal path From page 2 of the UT report, Scan # 4
The flaw exhibited 20% DAC at 1.413 and 2.372 inches MP. Max amplitude is 1.918 inches MP with the transducer exit point at 1.0 inches from the centerline of the weld and 95.0 inches from the 0" reference. (Use of 20% DAC vs. 50% max amp for indications > 100% DAC is conservative.)

*) Determine correction factor due to curvature.
Radius = 67.94" (R). Surface distance to max amp point = 1.38" (C). C/R = .0203 TAN.
INV TAN = 1.164 . COS = .999 . (R / COS) – R = .068" correction factor.

1) Determine the upper depth of the flaw from the exam surface.
1.413" (metal path at 20% upper) * COS of the measured angle 46° = .981" - .068" correction factor = .913 inches depth.

2) Determine the lower depth of the flaw from the exam surface.
2.372" (metal path at 20% lower) * COS of the measured angle 46° = 1.648" - .068" correction factor = 1.580 inches depth.

3) Determine the depth of the flaw from the exam surface at the maximum amplitude point.
1.918" (metal path at maximum amplitude point) * COS of the measured angle 46° = 1.332" - .068" correction factor = 1.264 inches depth.

4) Determine the distance from 0" reference to the maximum amplitude point of the flaw.
1.918" (metal path at maximum amplitude point) squared = 3.679 (a^2)
1.332" (depth at maximum amplitude point, before correction) squared = 1.77 (b^2)
$\sqrt{a^2 - b^2}$ = 1.380 inches of surface distance to the flaw from the transducer exit point.
95.0 (Lmax) + or – 1.38" (surf dist) = 93.62 inches from 0" reference.
(+ or – based on scan direction)

5) Determine S by picking the smaller of the following;
S = .913" (result of 1) = distance between exam surface and the upper flaw tip
>> OR <<
S = 5.50" (part "t") – 1.580" (result of 2) = 3.920" distance between the side opposite exam surface and the lower flaw tip

6) Determine 2d in though wall thickness.
1.580" (from step 2) – .913" (from step 1) = .667 inches.

REPORT# _____

Flaw Sizing Calculations Using Metal Path for Vessel Welds > 2"

For surface and subsurface single planar flaws oriented in plane normal to pressure retaining surface

Determination of surface or subsurface

0.4d = (2d / 2) * 0.4 = **.133"**

Compare to S (from step 5)

If S is less than 0.4d, the flaw is **surface**. a = 2d + S = **N/A** inches.

If S is greater than or equal to 0.4a the flaw is **sub-surface**. a = 2a / 2 = **.334** inches.

l = **.70"** (for a/*l* > 0.5, *l* = 2a) t = **5.5"** (part thickness)

a = **.35"** (surf or sub surf, circle one) S = **.90"**

ISI Flaw Sizing Worksheet

REPORT# _____

Site/Unit:	NMC / PI2	Procedure.	ISI-UT-3	Outage No.:	PI2RF2002
Summary No.:	502618	Procedure Revision/FC:	9 / ---	Report No.:	2002U010
Workscope:	ISI	Work Order No.:	0106946	Page:	___ of ___

1) Flaw Number #2 45°
2) Item Number B2.40
3) ISI Interval 3rd Interval ⊗ OK Reviewer SPW
4) Code Edition & Addenda 89 no addenda ⊗ OK Reviewer SPW
5) Method UT
6) Flaw Sketch (See Below) ⊗ OK Reviewer SPW

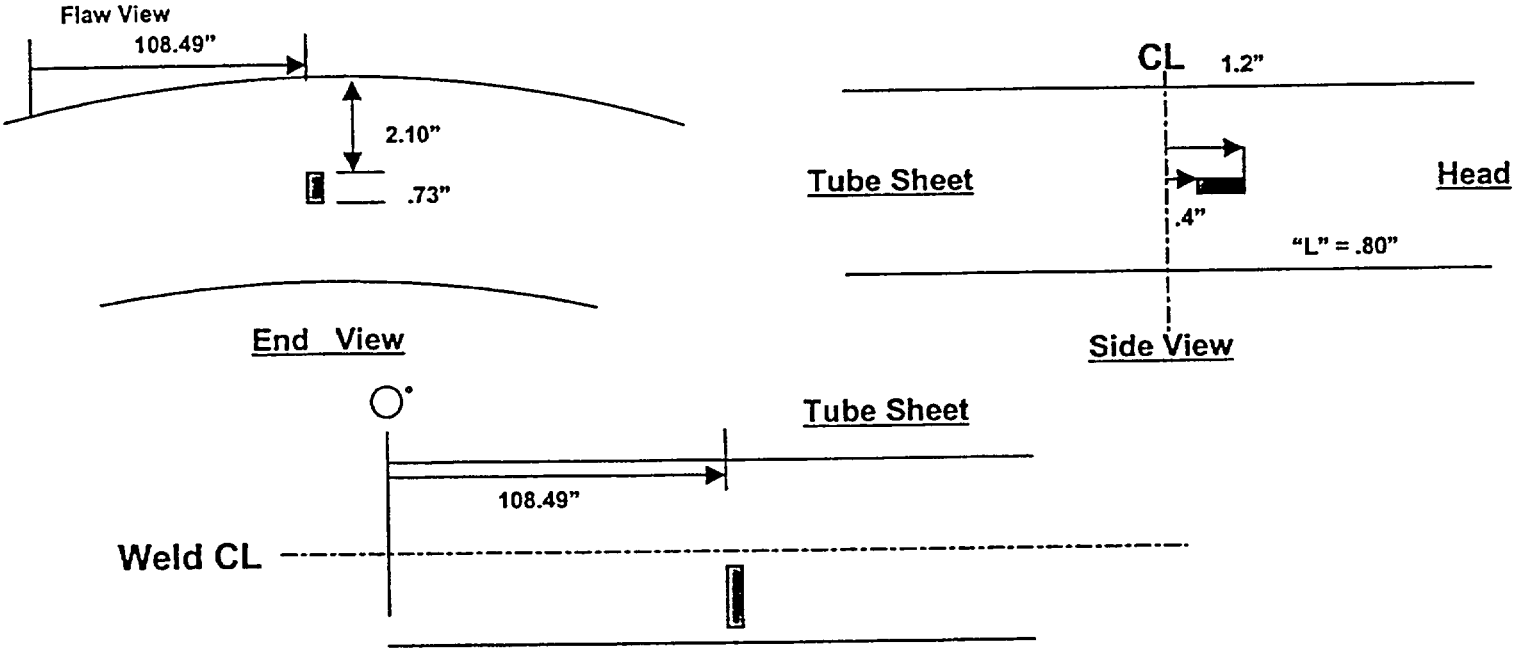

7) Calculations ⊗ OK Reviewer SPW

Show determination of Surface or Subsurface
See attached sheets fo calculations.

Show determination of type of "a" to use
See attached sheets fo calculations.

8) ISI-FE-1 Paragraph ~~7.0~~ 6.1 - "Rounding-off Method" was used ⊙ Yes Preparer SPC ⊗ OK Reviewer SPW
9) Code Flaw Dimensions ⊗ OK Reviewer SPW
"l" = .80" "a" = .40" "t *nominal*" = N/A "t *measured*" = 5.5 "s" = 2.1" "w" = N/A
10) Flaw Type ⊗ OK Reviewer SPW Subsurface Planar (UT/RT)
11) Flaw Characterization Figure ⊗ OK Reviewer SPW IWA-3320-1
12) Flaw Characterization Figure Number FLAW # 1
13) Was IWA-3300 Flaw Characterization followed? ⊙ Yes ○ No If no, why?

14) The correct Code Edition and Addenda was available and used. ⊙ Yes Preparer SPC ⊗ OK Reviewer SPW

15) Prepared by and date
Sean P. Clay 2-10-02
The results are correct and the methodology used is in accordance with applicable codes, standards, specifications and procedures.

16) Review by and date
2-19-02
The review assures that the results are correct and the methodology used is in accordance with applicable codes, standards, specifications and procedures.

ISI Flaw Disposition Worksheet

REPORT# _____

Site/Unit: NMC 1 PI 2 | Procedure: ISI-UT-3 | Outage No.: PI2RF2002
Summary No.: 502618 | Procedure Revision/FC: 9 1 | Report No.: 2002 4010
Workscope: ISI | Work Order No.: 0106946 | Page: ____ of ____

1) Flaw Number #2
2) Item Number B-B B2.40
3) ISI Interval 3rd.
4) Code Edition & Addenda 1989 No addenda
5) Acceptance Standard IWB-3510
6) Calculations (See Below)

OK Reviewer KSK
OK Reviewer KSK
OK Reviewer KSK
OK Reviewer KSK

$l = .80$ $t = 5.50''$
$a = .40$ $s = 2.1''$
Subsurface Flaw

$a/l = \frac{.40}{.80} = .50$ $a/t\%_{allow} = 76Y$ $Y = 1$
$= 7.6\%$ From TABLE IWB 3510-1

$a/t_{actual} = \frac{.40}{5.50} = .073$

$a/t\%_{actual} = 7.3\%$

$a/t\%_{allowed} > a/t\%_{actual}$ $76\% > 7.3\%$

7) Results OK Reviewer KSK
a/l = .50 Code allowable a/t% = 7.6 Calculated a/t% = 7.3 Laminar flaw surface area: (0.75 | w) = NA
8) Table used for analysis OK Reviewer KSK IWB-3510-1
9) Was linear interpolation used? ○ Yes ● No If no, why?
DIRECT FROM TABLE.
10) Was IWA-3200 Significant Digits For Limiting Values followed? ● Yes ○ No If no, why?

11) The correct Code Edition and Addenda was available and used. ● Yes Preparer [illegible] OK Reviewer KSK
12) Statement of acceptability or rejectability with basis. OK Reviewer KSK ● Accept ○ Reject
- ● (a/t) Code allowable > (a/t) calculated
- ○ OEM flaw evaluation handbook (see attached analysis)
- ○ (a/t) Code allowable < (a/t) calculated

13) Prepared by and date [signature] 2-11-2002
The results are correct and the methodology used is in accordance with applicable codes, standards, specifications and procedures.

14) Engineering review by and date [signature] 2-13-02
This review assures that the results are correct and the methodology used is in accordance with applicable codes, standards, specifications and procedures.

15) Approved by and date [signature] 2/13/02
This approval assures that all involved with this flaw sizing and flaw disposition were aware of the necessity that the results and the methodology are correct and in accordance with applicable codes, standards, specifications and procedures.

Flaw Sizing Calculations Using Metal Path for Vessel Welds > 2"

For surface and subsurface single planar flaws oriented in plane normal to pressure retaining surface

ASME SECT XI 1989 W/ NO ADDENDA SPC INITIAL TO VERIFY

ISI Report # 2002U010 Evaluation Performed By: S. Clay Date: 02/10/02
Flaw # #2 Reviewed By: J. Wren Date: 2-10-02

Length
Length of the flaw "ℓ" is determined by finding the difference between L1 and L2 for perpendicular scans, W1 and W2 for parallel scans.
L and W values are from page 2 of the UT report.
ℓ = .40" (L2) - 1.20" (L1) = -.80" inches.

Thickness
Thickness of the component at the location of the flaw, using UT or nom wall (circle one).
This value is from page 1 of the UT report.
"t" = 5.50 inches

Calibration
The measured angle in the calibration block was 46° degrees

Calculations using metal path From page 2 of the UT report, Scan # 4
The flaw exhibited 20% DAC at 3.178 and 4.291 inches MP. Max amplitude is 3.633 inches MP with the transducer exit point at 0.9 inches from the centerline of the weld and 111.1 inches from the 0" reference. (Use of 20% DAC vs. 50% max amp for indications > 100% DAC is conservative.)

*) Determine correction factor due to curvature.
Radius = 67.94" (R). Surface distance to max amp point = 2.613" (C). C/R = .038 TAN.
INV TAN = 2.176 . COS = .999 . (R / COS) – R = .068" correction factor.

1) Determine the upper depth of the flaw from the exam surface.
3.178" (metal path at 20% upper) * COS of the measured angle 46° = 2.208" - .068" correction factor = 2.140 inches depth.

2) Determine the lower depth of the flaw from the exam surface.
4.291" (metal path at 20% lower) * COS of the measured angle 46° = 2.981" - .068" correction factor = 2.913 inches depth.

3) Determine the depth of the flaw from the exam surface at the maximum amplitude point.
3.633" (metal path at maximum amplitude point) * COS of the measured angle 46° = 2.524" - .068" correction factor = 2.456 inches depth.

4) Determine the distance from 0" reference to the maximum amplitude point of the flaw.
3.633" (metal path at maximum amplitude point) squared = 13.199 (a^2)
2.524" (depth at maximum amplitude point, before correction) squared = 6.371 (b^2)
$\sqrt{a^2 - b^2}$ = 2.613 inches of surface distance to the flaw from the transducer exit point.
111.1 (Lmax) + or – 2.613" (surf dist) = 108.487 inches from 0" reference.
(+ or – based on scan direction)

5) Determine S by picking the smaller of the following;
S = 2.140" (result of 1) = distance between exam surface and the upper flaw tip
>> OR <<
S = 5.5 (part "t") – 2.913 (result of 2) = 2.587 distance between the side opposite exam surface and the lower flaw tip

6) Determine 2d in though wall thickness.
2.913" (from step 2) – 2.140" (from step 1) = .773 inches.

REPORT# _____

Flaw Sizing Calculations Using Metal Path for Vessel Welds > 2"

For surface and subsurface single planar flaws oriented in plane normal to pressure retaining surface

Determination of surface or subsurface

0.4d = (2d / 2) * 0.4 = **.155"**

Compare to S (from step 5)

If S is less than 0.4d, the flaw is **surface**. a = 2d + S = **N/A** inches.

If S is greater than or equal to 0.4a the flaw is **sub-surface**. a = 2a / 2 = **.386** inches.

l = **.80"** (for a/l > 0.5, l = 2a) t = **5.50"** (part thickness)

a = **.40"** (surf or sub surf, circle one) S = **2.1"**

REPORT# _____

ISI Flaw Sizing Worksheet

Site/Unit:	NMC / PI2	Procedure:	ISI-UT-3	Outage No.:	PI2RF2002
Summary No.:	502618	Procedure Revision/FC:	9 / ---	Report No.:	2002U010
Workscope:	ISI	Work Order No.:	0106946	Page:	___ of ___

1) Flaw Number #3 45°
2) Item Number B2.40
3) ISI Interval 3rd Interval ⊗ OK Reviewer SPW
4) Code Edition & Addenda 89 no addenda ⊗ OK Reviewer SPW
5) Method UT
6) Flaw Sketch (See Below) ⊗ OK Reviewer SPW

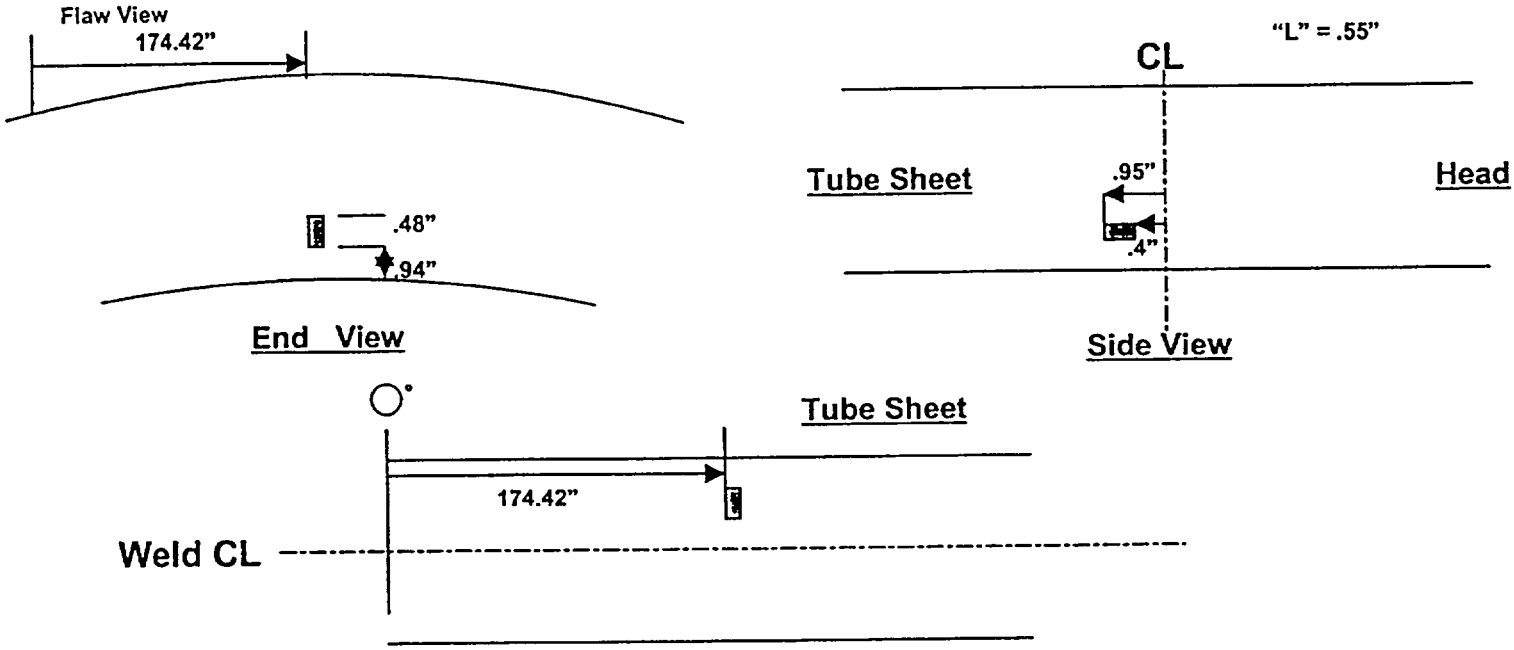

7) Calculations ⊗ OK Reviewer SPW

Show determination of Surface or Subsurface
See attached sheets fo calculations.

Show determination of type of "a" to use
See attached sheets fo calculations.

8) ISI-FE-1 Paragraph 10.1 SPC - "Rounding-off Method" was used ⊙ Yes Preparer SPC ⊗ OK Reviewer SPW

9) Code Flaw Dimensions ⊗ OK Reviewer SPW
"l" = .55" "a" = .125" "t *nominal*" = N/A "t *measured*" = 5.5 "s" = .95" "w" = N/A

10) Flaw Type ⊗ OK Reviewer SPW Subsurface Planar (UT/RT)

11) Flaw Characterization Figure ⊗ OK Reviewer SPW IWA-3320-1

12) Flaw Characterization Figure Number FLAW # 2

13) Was IWA-3300 Flaw Characterization followed? ⊙ Yes ○ No If no, why?

14) The correct Code Edition and Addenda was available and used. ⊙ Yes Preparer SPC ⊗ OK Reviewer SPW

15) Prepared by and date
SEAN P. CLAY 2-10-02
The results are correct and the methodology used is in accordance with applicable codes, standards, specifications and procedures.

16) Review by and date
2-19-02
The review assures that the results are correct and the methodology used is in accordance with applicable codes, standards, specifications and procedures.

REPORT# _____

ISI Flaw Disposition Worksheet

Site/Unit: NMC 1 PI2 | Procedure: IST-UT-3 | Outage No.: PI2RF2002
Summary No.: 502618 | Procedure Revision/FC. 9 1 | Report No.: 2002 U010
Workscope: IST | Work Order No.: 0106946 | Page: ___ of ___

1) Flaw Number #3 | 3) ISI Interval 3rd. | ☑ OK Reviewer KSL
2) Item Number B-B B2.40 | 4) Code Edition & Addenda 1989 No. addendum. | ☑ OK Reviewer KSL
5) Acceptance Standard IWB-3510 | ☑ OK Reviewer KSL
6) Calculations (See Below) | ☑ OK Reviewer KSL

$\ell = .55$ $t = 5.50''$
$a = .25$ $S = .95''$

Flaw is sub surface $a/\ell = \frac{.25}{.55} = .45$ $a/t\%_{allow} = 6.7\%$ $\psi = 1$ from TABLE 3510 1

$\psi = S/a = 3.8 \therefore \psi = 1$

$a/t\%_{actual} = \frac{.25}{5.50} \times 100 = 4.5\%$

$a/t\%_{allowed} > a/t\%_{act}$ $6.7\% > 4.5\%$

7) Results ☑ OK Reviewer KSL
a/l = .45 Code allowable a/t% = 6.7 Calculated a/t% = 4.5 Laminar flaw surface area: (0.75 | w) = N/A
8) Table used for analysis ☑ OK Reviewer KSL IWB-3510-1
9) Was linear interpolation used? ○ Yes ● No If no, why?
DIRECT FROM TABLE.
10) Was IWA-3200 Significant Digits For Limiting Values followed? ● Yes ○ No If no, why?

11) The correct Code Edition and Addenda was available and used. ● Yes Preparer DKW ☑ OK Reviewer KSL
12) Statement of acceptability or rejectability with basis. ☑ OK Reviewer KSL ● Accept ○ Reject
- ● (a/t) Code allowable > (a/t) calculated
- ○ OEM flaw evaluation handbook (see attached analysis)
- ○ (a/t) Code allowable < (a/t) calculated

13) Prepared by and date Daniel K Wilcox 2-11-2002
The results are correct and the methodology used is in accordance with applicable codes, standards, specifications and procedures.

14) Engineering review by and date [signature] 2-13-02
This review assures that the results are correct and the methodology used is in accordance with applicable codes, standards, specifications and procedures.

15) Approved by and date Mone VK 2/13/02
This approval assures that all involved with this flaw sizing and flaw disposition were aware of the necessity that the results and the methodology are correct and in accordance with applicable codes, standards, specifications and procedures.

Flaw Sizing Calculations Using Metal Path for Vessel Welds > 2"

For surface and subsurface single planar flaws oriented in plane normal to pressure retaining surface

ASME SECT XI 1989 W/ NO ADDENDA SPC INITIAL TO VERIFY

ISI Report # 2002U010 Evaluation Performed By: S. Clay Date: 02/10/02
Flaw # #3 Reviewed By: J. Wren Date: 02/10/02

Length

Length of the flaw "ℓ" is determined by finding the difference between L1 and L2 for perpendicular scans, W1 and W2 for parallel scans.
L and W values are from page 2 of the UT report.
ℓ = .40" (L2) - 0.95" (L1) = -.55" inches.

Thickness

Thickness of the component at the location of the flaw, using UT or nom wall (circle one).
This value is from page 1 of the UT report.
"t" = 5.50 inches

Calibration

The measured angle in the calibration block was 46° degrees

Calculations using metal path From page 2 of the UT report, Scan # 4

The flaw exhibited 20% DAC at 6.064 and 6.756 inches MP. Max amplitude is 6.368 inches MP with the transducer exit point at 0.5 inches from the centerline of the weld and 179.0 inches from the 0" reference. (Use of 20% DAC vs. 50% max amp for indications > 100% DAC is conservative.)

*) Determine correction factor due to curvature.
Radius = 67.94" (R). Surface distance to max amp point = 4.581" (C). C/R = .0674 TAN.
INV TAN = 3.857 . COS = .998 . (R / COS) – R = .136" correction factor.

1) Determine the upper depth of the flaw from the exam surface.
6.064" (metal path at 20% upper) * COS of the measured angle 46° = 4.212" - .136" correction factor = 4.076 inches depth.

2) Determine the lower depth of the flaw from the exam surface.
6.756" (metal path at 20% lower) * COS of the measured angle 46° = 4.693" - .136" correction factor = 4.557 inches depth.

3) Determine the depth of the flaw from the exam surface at the maximum amplitude point.
6.368" (metal path at maximum amplitude point) * COS of the measured angle 46° = 4.424" - .136" correction factor = 4.288 inches depth.

4) Determine the distance from 0" reference to the maximum amplitude point of the flaw.
6.368" (metal path at maximum amplitude point) squared = 40.551 (a^2)
4.424" (depth at maximum amplitude point, before correction) squared = 19.572 (b^2)
$\sqrt{a^2 - b^2}$ = 4.580 inches of surface distance to the flaw from the transducer exit point.
179.0 (Lmax) + or – 4.580" (surf dist) = 174.420 inches from 0" reference.
(+ or – based on scan direction)

5) Determine S by picking the smaller of the following;
S = 4.076" (result of 1) = distance between exam surface and the upper flaw tip
>> OR <<
S = 5.50 (part "t") – 4.557 (result of 2) = .943" distance between the side opposite exam surface and the lower flaw tip

6) Determine 2d in though wall thickness.
4.557" (from step 2) – 4.076" (from step 1) = .481 inches.

REPORT# _____

Flaw Sizing Calculations Using Metal Path for Vessel Welds > 2"

For surface and subsurface single planar flaws oriented in plane normal to pressure retaining surface

Determination of surface or subsurface

0.4d = (2d / 2) * 0.4 = .096"

Compare to S (from step 5)

If S is less than 0.4d, the flaw is **surface.** a = 2d + S = N/A inches.

If S is greater than or equal to 0.4a the flaw is **sub-surface.** a = 2a / 2 = .241 inches.

l = .55" (for a/l > 0.5, l = 2a) t = 5.50" (part thickness)

a = .25" (surf or sub surf, circle one) S = .95"

ISI Flaw Sizing Worksheet

Site/Unit:	NMC / PI2	Procedure:	ISI-UT-3	Outage No.:	PI2RF2002
Summary No :	502618	Procedure Revision/FC:	9 / —	Report No.:	2002U010
Workscope:	ISI	Work Order No.:	0106946	Page:	of

1) Flaw Number #4 45
2) Item Number B2.40
3) ISI Interval 3rd Interval ⊗ OK Reviewer SPW
4) Code Edition & Addenda 89 no addenda ⊗ OK Reviewer SPW
5) Method UT
6) Flaw Sketch (See Below) ⊗ OK Reviewer SPW

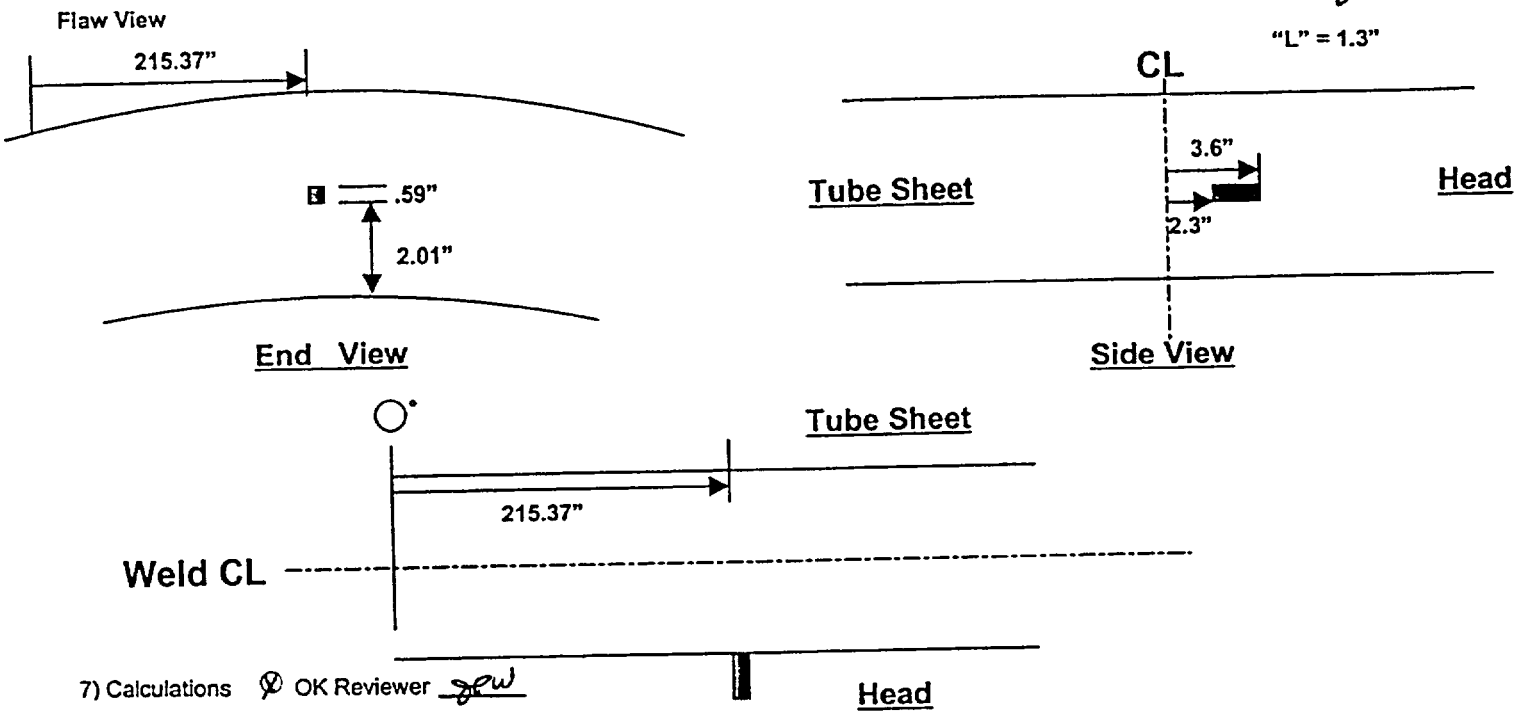

7) Calculations ⊗ OK Reviewer SPW

Show determination of Surface or Subsurface
See attached sheets fo calculations.

Show determination of type of "a" to use
See attached sheets fo calculations.

8) ISI-FE-1 Paragraph ~~2.0~~ 6.1 - "Rounding-off Method" was used ⊙ Yes Preparer SPC ⊗ OK Reviewer SPW SPC
9) Code Flaw Dimensions ⊗ OK Reviewer SPW
"l" = 1.3" "a" = .30" "t *nominal*" = N/A "t *measured*" = 5.5 "s" = 2.0" "w" = N/A
10) Flaw Type ⊗ OK Reviewer SPW Subsurface Planar (UT/RT)
11) Flaw Characterization Figure ⊗ OK Reviewer SPW IWA-3320-1
12) Flaw Characterization Figure Number FLAW # 2
13) Was IWA-3300 Flaw Characterization followed? ⊙ Yes ○ No If no, why?

14) The correct Code Edition and Addenda was available and used. ⊙ Yes Preparer SPC ⊗ OK Reviewer SPW

15) Prepared by and date Sean P. Clay 02-10-02
The results are correct and the methodology used is in accordance with applicable codes, standards, specifications and procedures

16) Review by and date 2-19-02
The review assures that the results are correct and the methodology used is in accordance with applicable codes, standards, specifications and procedures.

REPORT# _____

ISI Flaw Disposition Worksheet

Site/Unit. NMC 1 PI2 | Procedure: ISI-UT-3 | Outage No.: PI2RF2002
Summary No.: 502618 | Procedure Revision/FC: 9 1 – | Report No.: 20024010
Workscope: ISI | Work Order No.: 0106946 | Page: ____ of ____

1) Flaw Number #4
2) Item Number B-B B2.40
3) ISI Interval 3rd. ☑ OK Reviewer KSL
4) Code Edition & Addenda 1989 No Addenda ☑ OK Reviewer KSL
5) Acceptance Standard IWB-3510 ☑ OK Reviewer KSL
6) Calculations (See Below) ☑ OK Reviewer KSL

$l = 1.3''$ $t = 5.50''$
$a = .30''$ $S = 2.0''$
Flaw is subsurface.

$a/l = \frac{.30''}{1.3''} = .23$

From Table IWB-3510-1

$a/t_{actual} \times 100 = a/t\%_{actual} = \frac{.30''}{5.50''} = 5.5\%$

$a/t\%_{allow} @ 0.20 = 3.3\%$ $a/t\%_{allow} @ 0.25 = 3.8\%$

$y_1 = S/a = \frac{2.0}{.30} = 6.6$ $\therefore y = 1$

$a/t\%_{allow @ .23} = \frac{(3.8-3.3)(.23-.20)}{.25-0.20} + 3.3$

$= \frac{.5}{.05}(.03) + 3.3 = 3.6\% = a/t\%_{allow @ .23}$

$a/t\%_{allow @ .23} < a/t\%_{actual}$ NOT Acceptable by code Table, use OEM Flaw evaluation Handbook

7) Results ☑ OK Reviewer KSL
a/l = .23 Code allowable a/t% = 3.6 Calculated a/t% = 5.5 Laminar flaw surface area: (0.75 | w) = N/A
8) Table used for analysis ☑ OK Reviewer KSL IWB-3510-1
9) Was linear interpolation used? ◉ Yes ○ No If no, why?

10) Was IWA-3200 Significant Digits For Limiting Values followed? ◉ Yes ○ No If no, why?

11) The correct Code Edition and Addenda was available and used. ◉ Yes Preparer DSW ☑ OK Reviewer KSL
12) Statement of acceptability or rejectability with basis. ☑ OK Reviewer KSL ◉ Accept ○ Reject
- ○ (a/t) Code allowable > (a/t) calculated
- ● OEM flaw evaluation handbook (see attached analysis)
- ● (a/t) Code allowable < (a/t) calculated

FLAW is Acceptable per WCAP 14166, Section ~~A-15~~ or Page ~~A-15-16~~ A2-7. A-2

13) Prepared by and date Donald W Wilson 2-12-2002
The results are correct and the methodology used is in accordance with applicable codes, standards, specifications and procedures.

14) Engineering review by and date [signature] 2-14-02
This review assures that the results are correct and the methodology used is in accordance with applicable codes, standards, specifications and procedures.

15) Approved by and date Monica Vila 2/14/02
This approval assures that all involved with this flaw sizing and flaw disposition were aware of the necessity that the results and the methodology are correct and in accordance with applicable codes, standards, specifications and procedures.

PI 2 RFO 2002
Summary #502618
W.O. 0106946
Report 2002 U010
Flaw #4

a = .30"
t = 5.50"
s = 2.0"

Flaw is subsurface

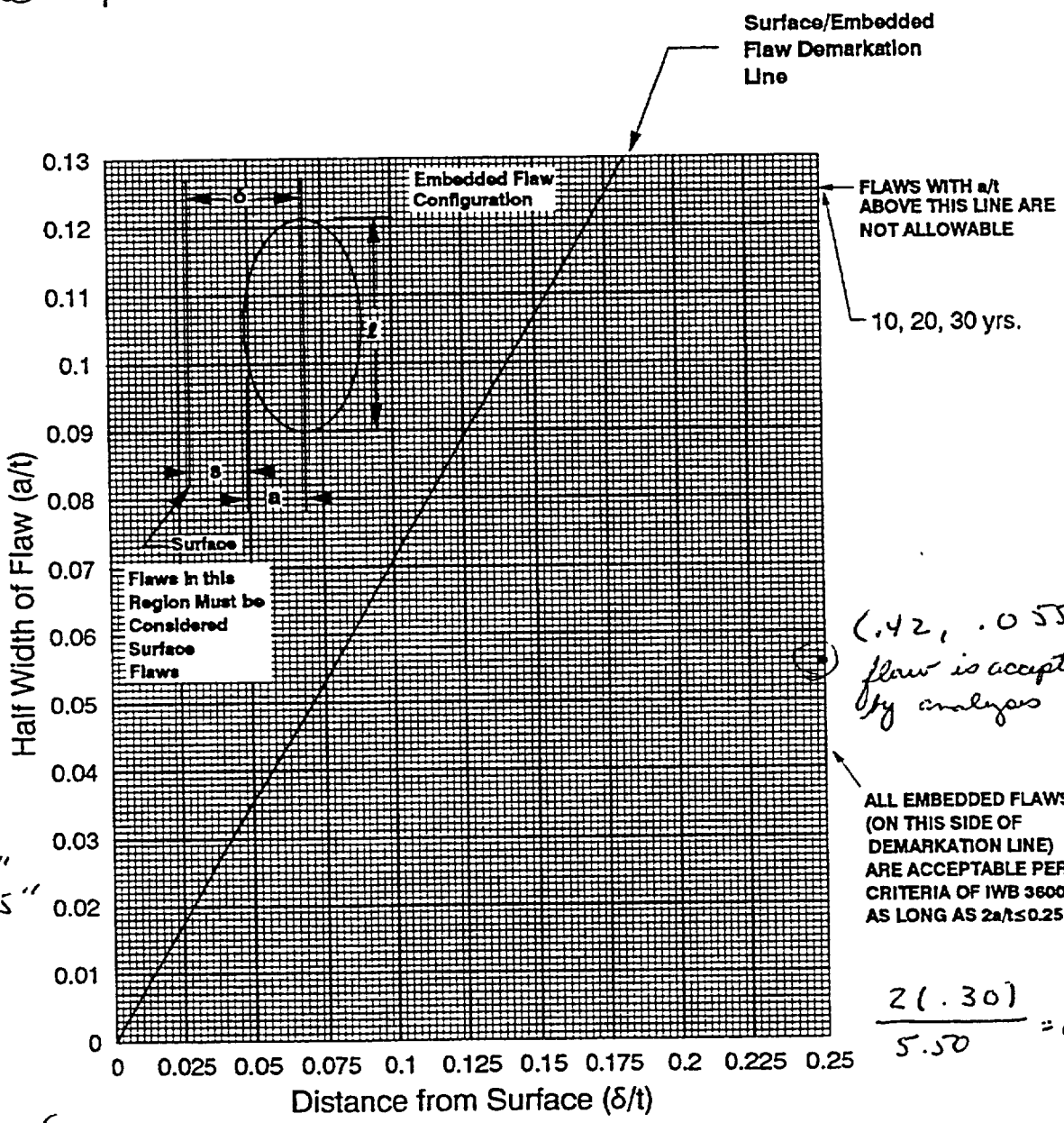

(.42, .055) flaw is acceptable by analysis

$a/t = \frac{.30''}{5.50''} = .055''$

$\frac{2(.30)}{5.50} = 0.11 = \frac{2(a)}{t}$

$\frac{\delta}{t} = \frac{s+a}{t} = \frac{2.0'' + .30}{5.50} = \frac{2.3''}{5.50} = .418 \approx .42$

Prepared by [signature] 2-14-02

Figure A-2.4 Flaw Evaluation Chart for the Tubesheet-Channel Head Junction for Prairie Island Units 1 and 2

X	Inside Surface		Surface Flaw	X	Longitudinal Flaw
X	Outside Surface	X	Embedded Flaw	X	Circumferential Flaw

Flaw Sizing Calculations Using Metal Path for Vessel Welds > 2"

For surface and subsurface single planar flaws oriented in plane normal to pressure retaining surface

ASME SECT XI 1989 W/ NO ADDENDA SPC INITIAL TO VERIFY

ISI Report # 2002U010 Evaluation Performed By: S. Clay Date: 02/10/02
Flaw # #4 Reviewed By: J. Wren Date: 02/12/02

Length
Length of the flaw "ℓ" is determined by finding the difference between L1 and L2 for perpendicular scans, W1 and W2 for parallel scans.
L and W values are from page 2 of the UT report.
ℓ = 2.3" (L2) - 3.6" (L1) = -1.3" inches.

Thickness
Thickness of the component at the location of the flaw, using UT or nom wall (circle one).
This value is from page 1 of the UT report.
"t" = 5.50 inches

Calibration
The measured angle in the calibration block was 46° degrees

Calculations using metal path From page 2 of the UT report, Scan # 3
The flaw exhibited 20% DAC at 4.240 and 5.090 inches MP. Max amplitude is 4.688 inches MP with the transducer exit point at 2.90 inches from the centerline of the weld and 212.00 inches from the 0" reference. (Use of 20% DAC vs. 50% max amp for indications > 100% DAC is conservative.)

*) Determine correction factor due to curvature.
Radius = 67.94" (R). Surface distance to max amp point = 3.372" (C). C/R = .048 TAN.
INV TAN = 2.744 . COS = .999 . (R / COS) – R = .068" correction factor.

1) Determine the upper depth of the flaw from the exam surface.
4.240" (metal path at 20% upper) * COS of the measured angle 46° = 2.945" - .068" correction factor = 2.877 inches depth.

2) Determine the lower depth of the flaw from the exam surface.
5.090" (metal path at 20% lower) * COS of the measured angle 46° = 3.536" - .068" correction factor = 3.468 inches depth.

3) Determine the depth of the flaw from the exam surface at the maximum amplitude point.
4.688" (metal path at maximum amplitude point) * COS of the measured angle 46° = 3.257" - .068" correction factor = 3.189 inches depth.

4) Determine the distance from 0" reference to the maximum amplitude point of the flaw.
4.688" (metal path at maximum amplitude point) squared = 21.977 (a^2)
3.257" (depth at maximum amplitude point, before correction) squared = 10.608 (b^2)
$\sqrt{a^2 - b^2}$ = 3.372 inches of surface distance to the flaw from the transducer exit point.
212.0 (Lmax) + or – 3.372" (surf dist) = 215.372 inches from 0" reference.
(+ or – based on scan direction)

5) Determine S by picking the smaller of the following;
S = 2.877" (result of 1) = distance between exam surface and the upper flaw tip
>> OR <<
S = 5.50 (part "t") – 3.486 (result of 2) = 2.014" distance between the side opposite exam surface and the lower flaw tip

6) Determine 2d in though wall thickness.
3.468" (from step 2) – 2.877" (from step 1) = .591 inches.

Flaw Sizing Calculations Using Metal Path for Vessel Welds > 2"

For surface and subsurface single planar flaws oriented in plane normal to pressure retaining surface

Determination of surface or subsurface

0.4d = (2d / 2) * 0.4 = **.118"**

Compare to S (from step 5)

If S is less than 0.4d, the flaw is **surface.** a = 2d + S = **N/A** inches.

If S is greater than or equal to 0.4a the flaw is **sub-surface.** a = 2a / 2 = **.296** inches.

l = **1.3"** (for a/l > 0.5, l = 2a)

a = **.30"** (surf or sub surf, circle one)

t = **5.50"** (part thickness)

S = **2.0"**

PAGE 24 of 121

REPORT# _____

ISI Flaw Sizing Worksheet

Site/Unit:	NMC / PI2	Procedure:	ISI-UT-3	Outage No.:	PI2RF2002
Summary No.:	502618	Procedure Revision/FC:	9 / —	Report No.:	2002U010
Workscope:	ISI	Work Order No.:	0106946	Page:	___ of ___

1) Flaw Number 45° #5
2) Item Number B2.40
3) ISI Interval 3rd Interval ⊗ OK Reviewer SPW
4) Code Edition & Addenda 89 no addenda ⊗ OK Reviewer SPW
5) Method UT
6) Flaw Sketch (See Below) ⊗ OK Reviewer SPW

Flaw View

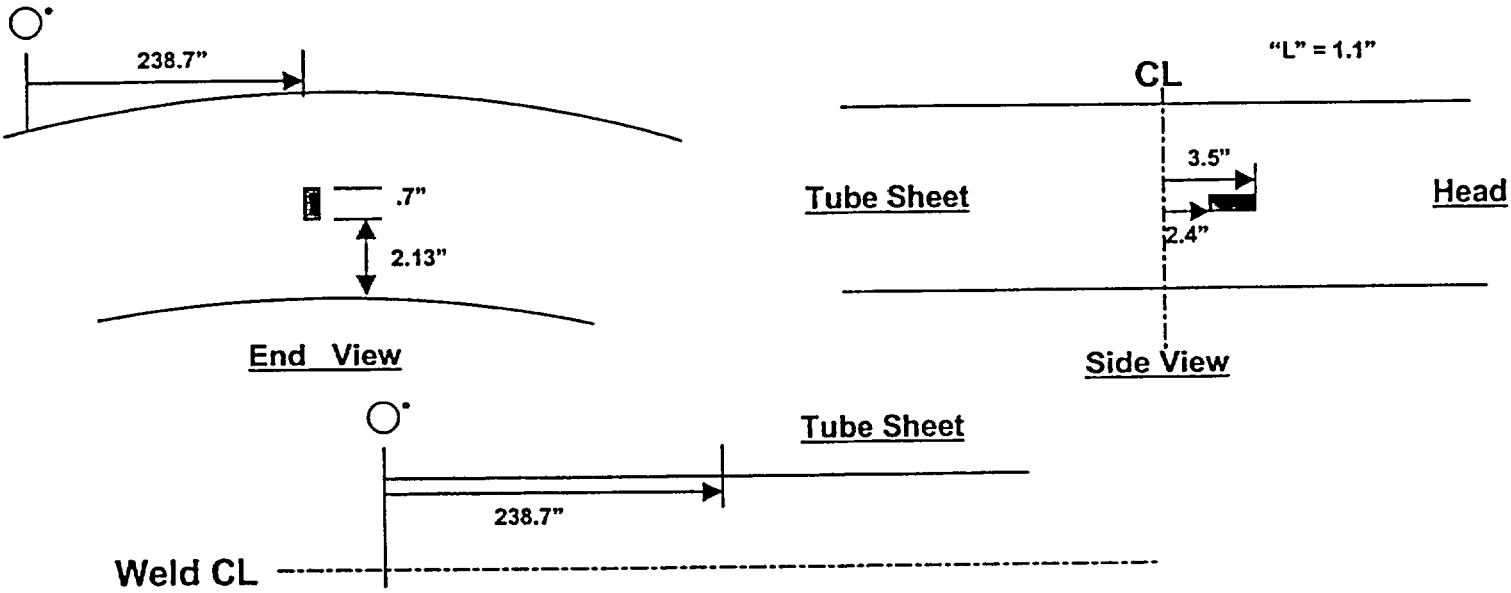

7) Calculations ⊗ OK Reviewer SPW

Show determination of Surface or Subsurface
See attached sheets fo calculations.

Head

Top View

Show determination of type of "a" to use
See attached sheets fo calculations.

8) ISI-FE-1 Paragraph ~~7.0~~ 6.1 - "Rounding-off Method" was used ⊙ Yes Preparer SPC ⊗ OK Reviewer SPW
9) Code Flaw Dimensions ⊗ OK Reviewer SPW
"l" = 1.1" "a" = .35" "t *nominal*" = N/A "t *measured*" = 5.5 "s" = 2.1" "w" = N/A
10) Flaw Type ⊗ OK Reviewer SPW Subsurface Planar (UT/RT)
11) Flaw Characterization Figure ⊗ OK Reviewer SPW IWA-3320-1
12) Flaw Characterization Figure Number FLAW #2
13) Was IWA-3300 Flaw Characterization followed? ⊙ Yes ○ No If no, why?

14) The correct Code Edition and Addenda was available and used. ⊙ Yes Preparer SPC ⊗ OK Reviewer SPW

15) Prepared by and date Sean P. Clay 2-10-02
The results are correct and the methodology used is in accordance with applicable codes, standards, specifications and procedures.

16) Review by and date 2-19-02
The review assures that the results are correct and the methodology used is in accordance with applicable codes, standards, specifications and procedures.

REPORT# _____

ISI Flaw Disposition Worksheet

Site/Unit: NMC 1 P12 | Procedure: ISI-UT-3 | Outage No.: P12RF2002
Summary No.: 502618 | Procedure Revision/FC: 9 1 - | Report No.: 20024010
Workscope: ISI | Work Order No.: 0106946 | Page: ____ of ____

1) Flaw Number #5 | 3) ISI Interval 3 | OK Reviewer KSL
2) Item Number B-B B2.40 | 4) Code Edition & Addenda 1989 No Addenda | OK Reviewer KSL
5) Acceptance Standard IWB-3510 | OK Reviewer KSL
6) Calculations (See Below) | OK Reviewer KSL

Flaw is subsurface

$\ell = 1.1''$ $t = 5.50''$

$a = .35''$ $S = 2.1''$

$a/\ell = \frac{.35''}{1.1''} = .32$

$a/t_{actual} \times 100\% = \frac{.35''}{5.50''} = 6.4\%$

$S/a = \frac{2.1}{.35} = 6$ ∴ $\gamma = 1$

$a/t\%_{allowed @ .30} = 4.4\gamma$ $a/t\%_{@ .35} = 5.1\gamma$

$a/t\%_{allowed @ .32} = \frac{(5.1-4.4)(.32-.30)}{.35-.30} + 4.4 = 4.68\%$

$a/t\%_{actual} = 6.4\%$ $a/t_{allowed} = 4.68\%$ $a/t\%_{actual} > a/t\%_{allow}$ TABLE IWB 3510-1

FLAW NOT ACCEPTABLE BY TABLE 3510-1, ANALYSIS CONTINUE USING WCAP 14166 FLAW EVALUATION HANDBOOK.

7) Results OK Reviewer KSL

a/l = .32 Code allowable a/t% = 4.68 Calculated a/t% = 6.4 Laminar flaw surface area: (0.75 | w) = NA

8) Table used for analysis OK Reviewer KSL IWB-3510-1

9) Was linear interpolation used? (●) Yes ( ) No If no, why?

10) Was IWA-3200 Significant Digits For Limiting Values followed? (●) Yes ( ) No If no, why?

11) The correct Code Edition and Addenda was available and used. (●) Yes Preparer DSW OK Reviewer KSL

12) Statement of acceptability or rejectability with basis. OK Reviewer KSL (●) Accept ( ) Reject

( ) (a/t) Code allowable > (a/t) calculated
(●) OEM flaw evaluation handbook (see attached analysis)
(●) (a/t) Code allowable < (a/t) calculated

FLAW Acceptable IAW WCAP 14166, Section ~~A15~~ A-2 KSL PAGE ~~A15-6~~ KSL A2-7.

13) Prepared by and date [signature] 2-14-2002

The results are correct and the methodology used is in accordance with applicable codes, standards, specifications and procedures.

14) Engineering review by and date [signature] 2-14-02

This review assures that the results are correct and the methodology used is in accordance with applicable codes, standards, specifications and procedures.

15) Approved by and date [signature] 2/14/02

This approval assures that all involved with this flaw sizing and flaw disposition were aware of the necessity that the results and the methodology are correct and in accordance with applicable codes, standards, specifications and procedures.

Outage No PI 2 ~~RFO2002~~ RF2002 KSA
Summary #502618
Work Order 0106946
Report 20020010 FLAW #5

Flaw is subsurface

a = .35" S = 2.1"
t = 5.5" δ = S + a = 2.1" + .35" = 2.45"

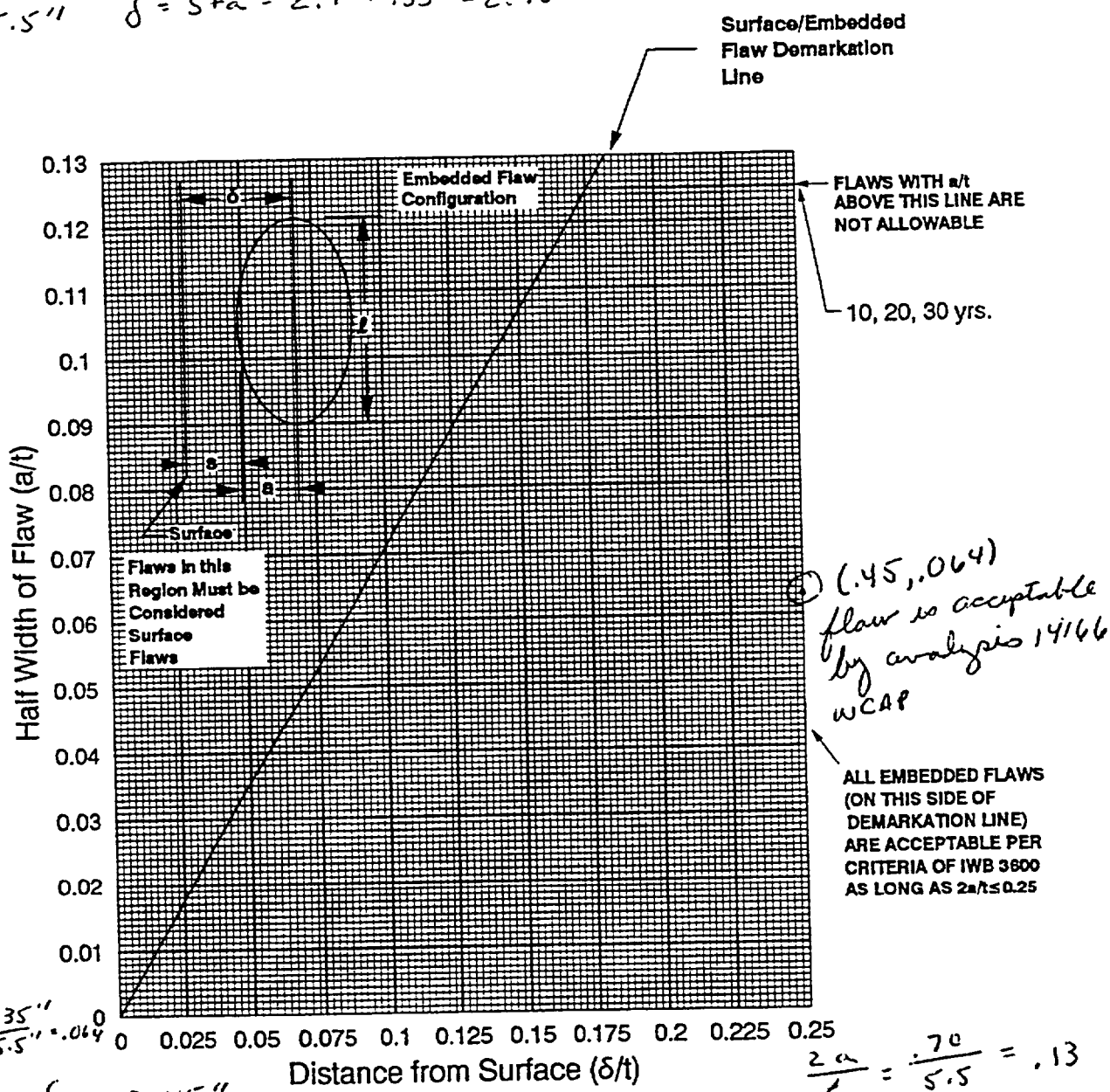

a/t = .35"/5.5" = .064

δ/t = 2.45"/5.5" = .45

2a/t = .70/5.5 = .13

Prepared By: [signature]

Figure A-2.4 Flaw Evaluation Chart for the Tubesheet-Channel Head Junction for Prairie Island Units 1 and 2

2-14-02

X	Inside Surface	___	Surface Flaw	X	Longitudinal Flaw
X	Outside Surface	X	Embedded Flaw	X	Circumferential Flaw

Flaw Sizing Calculations Using Metal Path for Vessel Welds > 2"

For surface and subsurface single planar flaws oriented in plane normal to pressure retaining surface

ASME SECT XI 1989 W/ NO ADDENDA SPC INITIAL TO VERIFY

ISI Report # 2002U010 Evaluation Performed By. S. Clay Date: 02/10/02
Flaw # #5 Reviewed By: J. Wren Date: 02/13/02

Length
Length of the flaw "ℓ" is determined by finding the difference between L1 and L2 for perpendicular scans, W1 and W2 for parallel scans.
L and W values are from page 2 of the UT report.
ℓ = 2.4" (L2) - 3.5" (L1) = -1.1" inches.

Thickness
Thickness of the component at the location of the flaw, using UT or nom wall (circle one).
This value is from page 1 of the UT report.
"t" = 5.50 inches

Calibration
The measured angle in the calibration block was 46° degrees

Calculations using metal path From page 2 of the UT report, Scan # 3
The flaw exhibited 20% DAC at 3.939 and 4.949 inches MP. Max amplitude is 4.442 inches MP with the transducer exit point at 3.0 inches from the centerline of the weld and 235.50 inches from the 0" reference. (Use of 20% DAC vs. 50% max amp for indications > 100% DAC is conservative.)

*) Determine correction factor due to curvature.
Radius = 67.94" (R). Surface distance to max amp point = 3.195" (C). C/R = .047 TAN.
INV TAN = 2.693 . COS = .999 . (R / COS) – R = .068" correction factor.

1) Determine the upper depth of the flaw from the exam surface.
3.939" (metal path at 20% upper) * COS of the measured angle 46° = 2.736" - .068" correction factor = 2.668 inches depth.

2) Determine the lower depth of the flaw from the exam surface.
4.949" (metal path at 20% lower) * COS of the measured angle 46° = 3.438" - .068" correction factor = 3.370 inches depth.

3) Determine the depth of the flaw from the exam surface at the maximum amplitude point.
4.442" (metal path at maximum amplitude point) * COS of the measured angle 46° = 3.086" - .068" correction factor = 3.018 inches depth.

4) Determine the distance from 0" reference to the maximum amplitude point of the flaw.
4.442" (metal path at maximum amplitude point) squared = 19.731 (a^2)
3.086" (depth at maximum amplitude point, before correction) squared = 9.523 (b^2)
$\sqrt{a^2 - b^2}$ = 3.195 inches of surface distance to the flaw from the transducer exit point.
235.5 (Lmax) + or – 3.195" (surf dist) = 238.695 inches from 0" reference.
(+ or – based on scan direction)

5) Determine S by picking the smaller of the following;
S = 2.668" (result of 1) = distance between exam surface and the upper flaw tip
>> OR <<
S = 5.50 (part "t") – 3.370 (result of 2) = 2.130" distance between the side opposite exam surface and the lower flaw tip

6) Determine 2d in though wall thickness.
3.370" (from step 2) – 2.668" (from step 1) = .702 inches.

Flaw Sizing Calculations Using Metal Path for Vessel Welds > 2"

For surface and subsurface single planar flaws oriented in plane normal to pressure retaining surface

Determination of surface or subsurface

0.4d = (2d / 2) * 0.4 = .140"

Compare to S (from step 5)

If S is less than 0.4d, the flaw is **surface**. a = 2d + S = N/A inches.

If S is greater than or equal to 0.4a the flaw is **sub-surface**. a = 2a / 2 = .351 inches.

l = 1.1" (for a/l > 0.5, l = 2a)

t = 5.50" (part thickness)

a = .35" (surf or sub surf circle one)

S = 2.1"

RECORD _____

REPORT# _____

ISI Flaw Sizing Worksheet

Site/Unit:	NMC / PI2	Procedure:	ISI-UT-3	Outage No.:	PI2RF2002
Summary No.:	502618	Procedure Revision/FC:	9 / ---	Report No.:	2002U010
Workscope:	ISI	Work Order No.:	0106946	Page:	___ of ___

1) Flaw Number #6 45°
2) Item Number B2 40
3) ISI Interval 3rd Interval ⊗ OK Reviewer gpw
4) Code Edition & Addenda 89 no addenda ⊗ OK Reviewer gpw
5) Method UT
6) Flaw Sketch (See Below) ⊗ OK Reviewer gpw

Flaw View

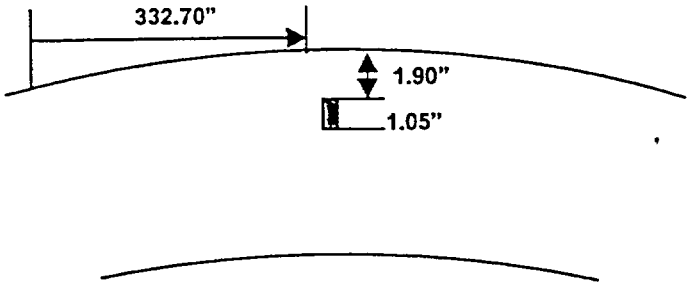

End View

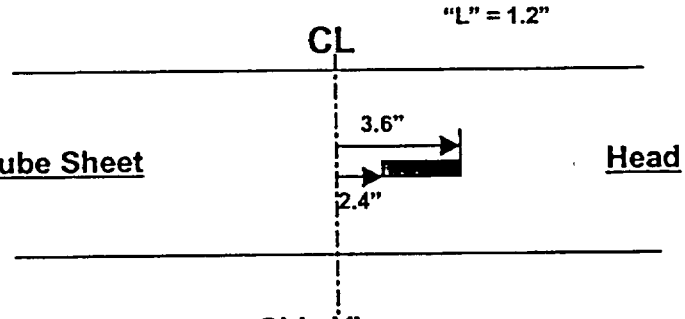

Side View

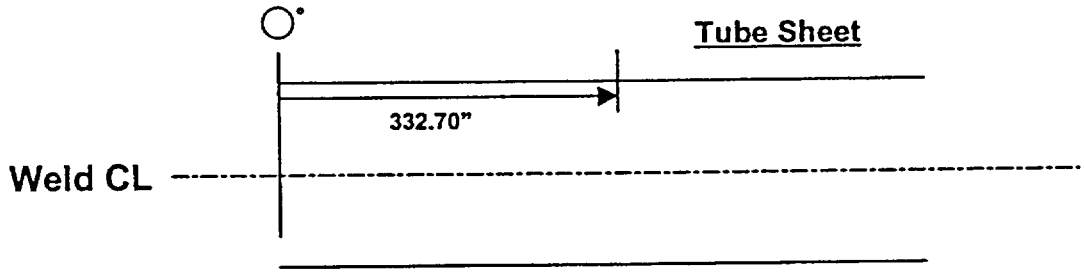

Top View

7) Calculations ⊗ OK Reviewer gpw

Show determination of Surface or Subsurface
See attached sheets fo calculations.

Show determination of type of "a" to use
See attached sheets fo calculations.

8) ISI-FE-1 Paragraph ~~7.0~~ 6.1 SPC "Rounding-off Method" was used ⊙ Yes Preparer SPC ⊗ OK Reviewer gpw

9) Code Flaw Dimensions ⊗ OK Reviewer gpw
"l" = 1.2" "a" = .55" "t *nominal*" = N/A "t *measured*" = 5.5 "s" = 1.9" "w" = N/A

10) Flaw Type ⊗ OK Reviewer gpw Subsurface Planar (UT/RT)

11) Flaw Characterization Figure ⊗ OK Reviewer gpw IWA-3320-1

12) Flaw Characterization Figure Number FLAW #1

13) Was IWA-3300 Flaw Characterization followed? ⊙ Yes ○ No If no, why?

14) The correct Code Edition and Addenda was available and used. ⊙ Yes Preparer SPC ⊗ OK Reviewer gpw

15) Prepared by and date
Sean P. Clay 2-10-02
The results are correct and the methodology used is in accordance with applicable codes, standards, specifications and procedures.

16) Review by and date
Gary P. Wu 2-19-02
The review assures that the results are correct and the methodology used is in accordance with applicable codes, standards, specifications and procedures.

REPORT # _____

ISI Flaw Disposition Worksheet

Site/Unit: NMC 1 PI2 | Procedure: ISI-UT-3 | Outage No: PI2RF2002
Summary No.: 502618 | Procedure Revision/FC: 9 1 | Report No.: 20024010
Workscope: ISI | Work Order No.: 0106946 | Page: ____ of ____

1) Flaw Number #6
2) Item Number B-B B2.40
3) ISI Interval 3rd.
4) Code Edition & Addenda 1989 No Addenda
5) Acceptance Standard IWB-3510
6) Calculations (See Below)

✓ OK Reviewer KSL
✓ OK Reviewer KSL
✓ OK Reviewer KSL
✓ OK Reviewer KSL

FLAW IS SUBSURFACE

$a = .55''$ $t = 5.50$
$l = 12''$ $S = 19''$

$a/t_{actual} \times 100\% = \frac{.55''}{5.50''} = 10\%$

$Y = S/a = \frac{19''}{.55} = 3.45$

$\therefore Y = 1$

$a/l = \frac{.55''}{12.0} = .46$

$a/t\%_{allowed} = 6.7Y$ @.45 $a/t\%_{allowed} = 7.6Y$ @.50 TABLE IWB 3510-1

$a/t\%_{allowed} @.46 = \frac{7.6 - 6.7}{.50 - .45}(.46 - .45) + 6.7 = \cancel{6.88}\ 6.9\%$ KSL 2-14-02

$a/t\%_{allow} = 6.88\%$ $a/t\%_{actual} = 10.0\%$ FLAW IS NOT Acceptable per TABLE IWB 3510-1 CONTINUE FLAW ANALYSIS PER WCAP 14166 - FLAW EVALUATION Handbook

7) Results ✓ OK Reviewer KSL
a/l = .46 Code allowable a/t% = 6.88 Calculated a/t% = 10.0 Laminar flaw surface area: (0 75 | w) = NA
8) Table used for analysis ✓ OK Reviewer KSL IWB-3510-1
9) Was linear interpolation used? ● Yes ○ No If no, why?

10) Was IWA-3200 Significant Digits For Limiting Values followed? ● Yes ○ No If no, why?

11) The correct Code Edition and Addenda was available and used. ● Yes Preparer [signature] ✓ OK Reviewer KSL
12) Statement of acceptability or rejectability with basis. ✓ OK Reviewer KSL ● Accept ○ Reject
○ (a/t) Code allowable > (a/t) calculated
● OEM flaw evaluation handbook (see attached analysis) FLAW acceptable by WCAP 14166 See ~~A15~~ A-2 Page ~~A15-1~~ A2-7
● (a/t) Code allowable < (a/t) calculated

13) Prepared by and date [signature] 2-14-2002
The results are correct and the methodology used is in accordance with applicable codes, standards, specifications and procedures.

14) Engineering review by and date [signature] 2-14-02
This review assures that the results are correct and the methodology used is in accordance with applicable codes, standards, specifications and procedures.

15) Approved by and date [signature] 2/18/02
This approval assures that all involved with this flaw sizing and flaw disposition were aware of the necessity that the results and the methodology are correct and in accordance with applicable codes, standards, specifications and procedures.

Outage No PI 2 ~~RFO 2002~~ RF 2002 KK
Summary # 502618
W.O.# 0106946
FLAW #6
a = .55"
t = 5.50"

FLAW IS SURFACE

s = 1.9"
δ = s + a = 1.9" + .55" = 2.45"

REPORT# _____

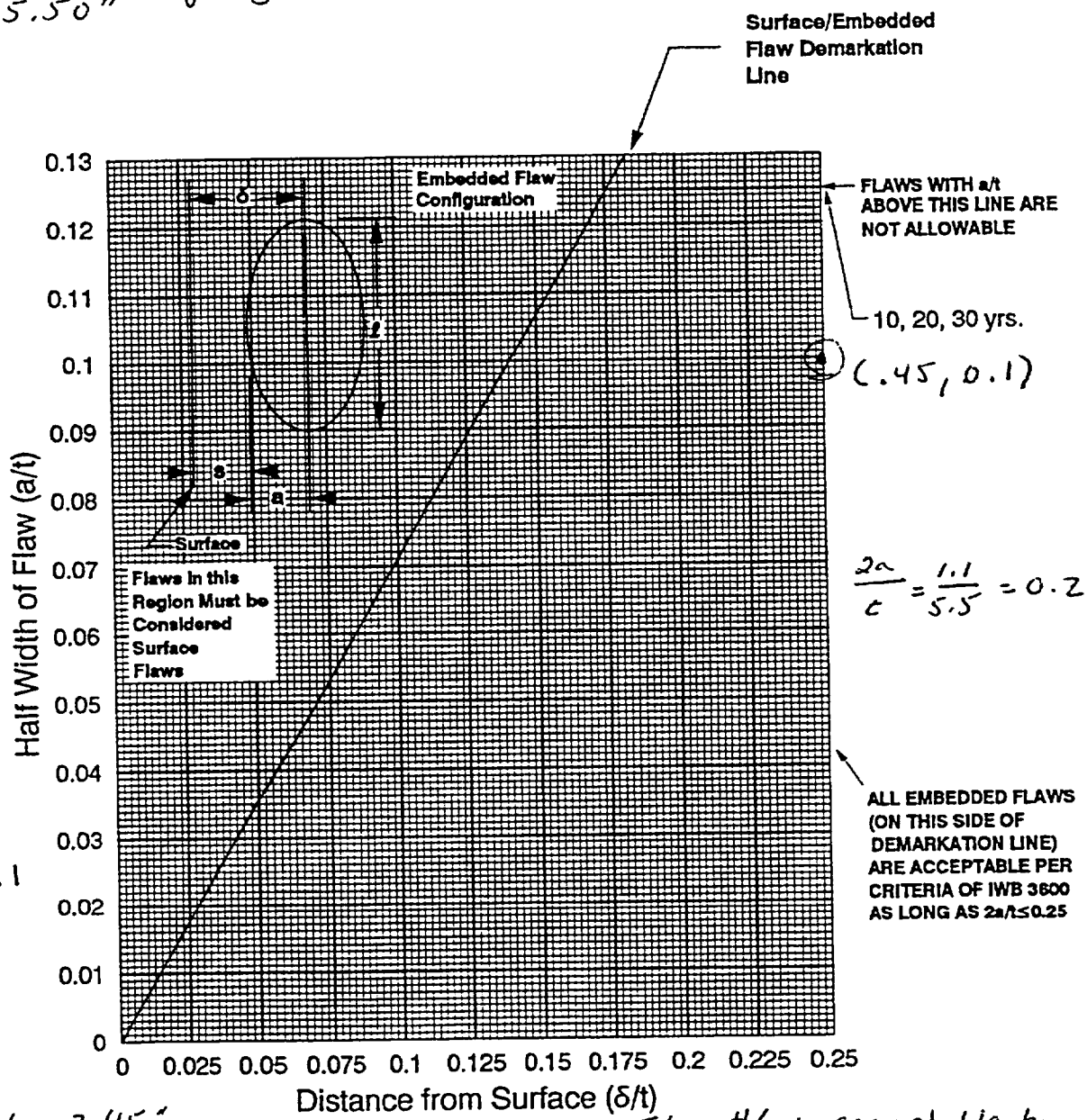

$\frac{2a}{t} = \frac{1.1}{5.5} = 0.2$

$a/t = \frac{.55}{5.5} = .1$

$\delta/t = \frac{2.45"}{5.5"} = .45$

Flaw #6 is acceptable by analysis WCAP 14166 Section A-2 Page A2 7

Figure A-2.4 Flaw Evaluation Chart for the Tubesheet-Channel Head Junction for Prairie Island Units 1 and 2

X	Inside Surface	___	Surface Flaw	X	Longitudinal Flaw
X	Outside Surface	X	Embedded Flaw	X	Circumferential Flaw

Prepared By [signature]

KAL 2-14-02

Flaw Sizing Calculations Using Metal Path for Vessel Welds > 2"

For surface and subsurface single planar flaws oriented in plane normal to pressure retaining surface

ASME SECT XI 1989 W/ NO ADDENDA SPC INITIAL TO VERIFY

ISI Report # 2002U010 Evaluation Performed By: S. Clay Date: 02/10/02
Flaw # #6 Reviewed By: J. Wren Date: 02/13/02

Length
Length of the flaw "*l*" is determined by finding the difference between L1 and L2 for perpendicular scans, W1 and W2 for parallel scans.
L and W values are from page 2 of the UT report.
l = 2.4" (L2) - 3.6" (L1) = -1.2" inches.

Thickness
Thickness of the component at the location of the flaw, using UT or nom wall (circle one).
This value is from page 1 of the UT report
"t" = 5.50 inches

Calibration
The measured angle in the calibration block was 46° degrees

Calculations using metal path From page 2 of the UT report, Scan # 3
The flaw exhibited 20% DAC at 2.827 and 4.344 inches MP. Max amplitude is 3.888 inches MP with the transducer exit point at 2.60 inches from the centerline of the weld and 329.90 inches from the 0" reference. (Use of 20% DAC vs. 50% max amp for indications > 100% DAC is conservative.)

*) Determine correction factor due to curvature.
Radius = 67.94" (R). Surface distance to max amp point = 2.797" (C). C/R = .041 TAN.
INV TAN = 2.357 . COS = .999 . (R / COS) – R = .068" correction factor.

1) Determine the upper depth of the flaw from the exam surface.
2.827" (metal path at 20% upper) * COS of the measured angle 46° = 1.964" - .068" correction factor = 1.896 inches depth.

2) Determine the lower depth of the flaw from the exam surface.
4.344" (metal path at 20% lower) * COS of the measured angle 46° = 3.018" - .068" correction factor = 2.950 inches depth.

3) Determine the depth of the flaw from the exam surface at the maximum amplitude point.
3.888" (metal path at maximum amplitude point) * COS of the measured angle 46° = 2.701" - .068" correction factor = 2.633 inches depth.

4) Determine the distance from 0" reference to the maximum amplitude point of the flaw.
3.888" (metal path at maximum amplitude point) squared = 15.117 (a^2)
2.701" (depth at maximum amplitude point, before correction) squared = 7.295 (b^2)
$\sqrt{a^2 - b^2}$ = 2.797 inches of surface distance to the flaw from the transducer exit point.
329.90 (Lmax) + or – 2.797" (surf dist) = 332.697 inches from 0" reference.
(+ or – based on scan direction)

5) Determine S by picking the smaller of the following;
S = 1.896" (result of 1) = distance between exam surface and the upper flaw tip
>> OR <<
S = 5.50 (part "t") – 2.950 (result of 2) = 2.550" distance, between the side opposite exam surface and the lower flaw tip

6) Determine 2d in though wall thickness.
2.950" (from step 2) – 1.896" (from step 1) = 1.054 inches.

PERCENT _____

Flaw Sizing Calculations Using Metal Path for Vessel Welds > 2"

For surface and subsurface single planar flaws oriented in plane normal to pressure retaining surface

Determination of surface or subsurface

0.4d = (2d / 2) * 0.4 = **.211"**

Compare to S (from step 5)

If S is less than 0.4d, the flaw is **surface**. a = 2d + S = **N/A** inches.

If S is greater than or equal to 0.4a the flaw is **sub-surface**. a = 2a / 2 = **.527** inches.

l = **1.2"** (for a/l > 0.5, l = 2a)

t = **5.50"** (part thickness)

a = **.55"** (surf or sub surf circle one)

S = **1.9"**

Revision _____

ISI Flaw Sizing Worksheet

Site/Unit:	NMC / PI2	Procedure:	ISI-UT-3	Outage No.:	PI2RF2002
Summary No.:	502618	Procedure Revision/FC:	9 / —	Report No.:	2002U010
Workscope:	ISI	Work Order No :	0106946	Page:	of

1) Flaw Number #7 45°
2) Item Number B2.40
3) ISI Interval 3rd Interval — OK Reviewer
4) Code Edition & Addenda 89 no addenda — OK Reviewer
5) Method UT
6) Flaw Sketch (See Below) — OK Reviewer

Flaw View

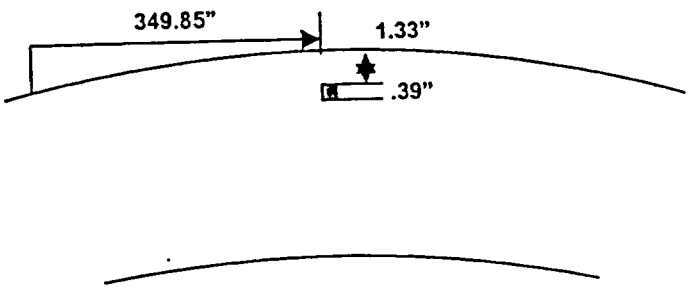

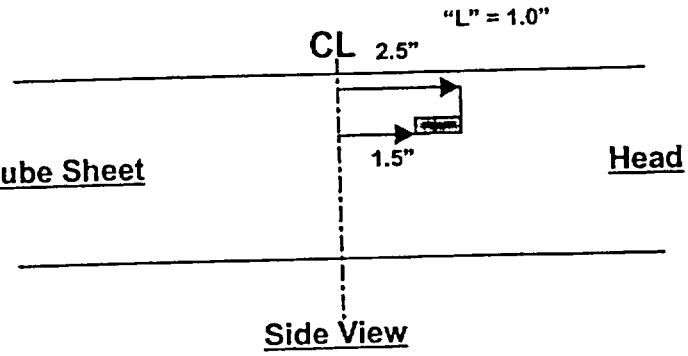

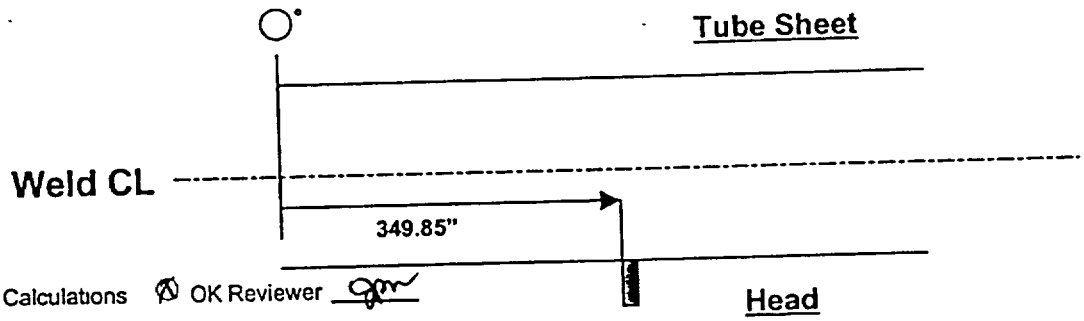

7) Calculations — OK Reviewer

Show determination of Surface or Subsurface
See attached sheets fo calculations.

Show determination of type of "a" to use
See attached sheets fo calculations.

8) ISI-FE-1 Paragraph ~~2.0~~ 6.1 SPC - "Rounding-off Method" was used — Yes Preparer SPC — OK Reviewer
9) Code Flaw Dimensions — OK Reviewer
"l" = 1.0" "a" = .20" "t *nominal*" = N/A "t *measured*" = 5.5 "s" = 1.3" "w" = N/A
10) Flaw Type — OK Reviewer — Subsurface Planar (UT/RT)
11) Flaw Characterization Figure — OK Reviewer — IWA-3320-1
12) Flaw Characterization Figure Number FLAW #1
13) Was IWA-3300 Flaw Characterization followed? Yes No If no, why?

14) The correct Code Edition and Addenda was available and used. Yes Preparer SPC — OK Reviewer

15) Prepared by and date Sean P. Clay 2-10-02
The results are correct and the methodology used is in accordance with applicable codes, standards, specifications and procedures.

16) Review by and date 2-19-02
The review assures that the results are correct and the methodology used is in accordance with applicable codes, standards, specifications and procedures.

ISI Flaw Disposition Worksheet

Site/Unit: NMC/PI2 | Procedure: ISI-UT-3 | Outage No.: PIRF2002
Summary No.: 502618 | Procedure Revision/FC: 9 / | Report No.: 20020010
Workscope: ISI | Work Order No.: 0106946 | Page: ___ of ___

1) Flaw Number #7 | 3) ISI Interval 3rd | OK Reviewer DSW
2) Item Number B-B B2.40 | 4) Code Edition & Addenda 1989 No Addenda | OK Reviewer DSW
FLAW IS SUBSURFACE | 5) Acceptance Standard IWB-3510 | OK Reviewer DSW
6) Calculations (See Below) | OK Reviewer DSW

$l = 1.0''$ $t = 5.50''$
$a = .20''$ $S = 1.3''$
$a/l = \frac{.20''}{1.0''}$ $a/t = \frac{.20''}{5.50} \times 100\% = 3.6\%$ $Y = S/a = \frac{1.3''}{.20''} = 6.5''$ $\therefore Y = 1$

$a/t_{allowed} = 3.3Y$ TABLE IWB 3510-1

$a/t_{allowed} = 3.3\%$ $a/t_{actual} = 3.6\%$

FLAW is not acceptable per TABLE IWB-3510-1.
Continue FLAW ANALYSIS per WCAP 14166 - KSH FLAW EVALUATION HANDBOOK.

7) Results OK Reviewer DSW
a/l = .20 Code allowable a/t% = 3.3% Calculated a/t% = 3.6% Laminar flaw surface area: (0.75 | w) = NA
8) Table used for analysis OK Reviewer DSW IWB-3510-1
9) Was linear interpolation used? ○ Yes ☑ No If no, why?
ON TABLE
10) Was IWA-3200 Significant Digits For Limiting Values followed? ☑ Yes ○ No If no, why?

11) The correct Code Edition and Addenda was available and used. ☑ Yes Preparer KSA OK Reviewer DSW
12) Statement of acceptability or rejectability with basis. OK Reviewer DSW ☑ Accept ○ Reject
○ (a/t) Code allowable > (a/t) calculated
● OEM flaw evaluation handbook (see attached analysis)
● (a/t) Code allowable < (a/t) calculated

FLAW IS Acceptable by WCAP 14166 Section A-2 Page A2-7.

13) Prepared by and date
Kam Lohl 2-14-02
The results are correct and the methodology used is in accordance with applicable codes, standards, specifications and procedures.

14) Engineering review by and date
Daniel Schlueter 2-14-02
This review assures that the results are correct and the methodology used is in accordance with applicable codes, standards, specifications and procedures.

15) Approved by and date
Monica Vila 2/18/02
This approval assures that all involved with this flaw sizing and flaw disposition were aware of the necessity that the results and the methodology are correct and in accordance with applicable codes, standards, specifications and procedures.

PI2 RF2002
Summary #502618
WO# 0106946
FLAW #7

FLAW IS SUBSURFACE

37 121

$a = .20''$ $t = 5.50''$
$\ell = 1.0''$ $s = 1.3''$
$\delta = s + a = 1.3 + .20 = 1.5''$

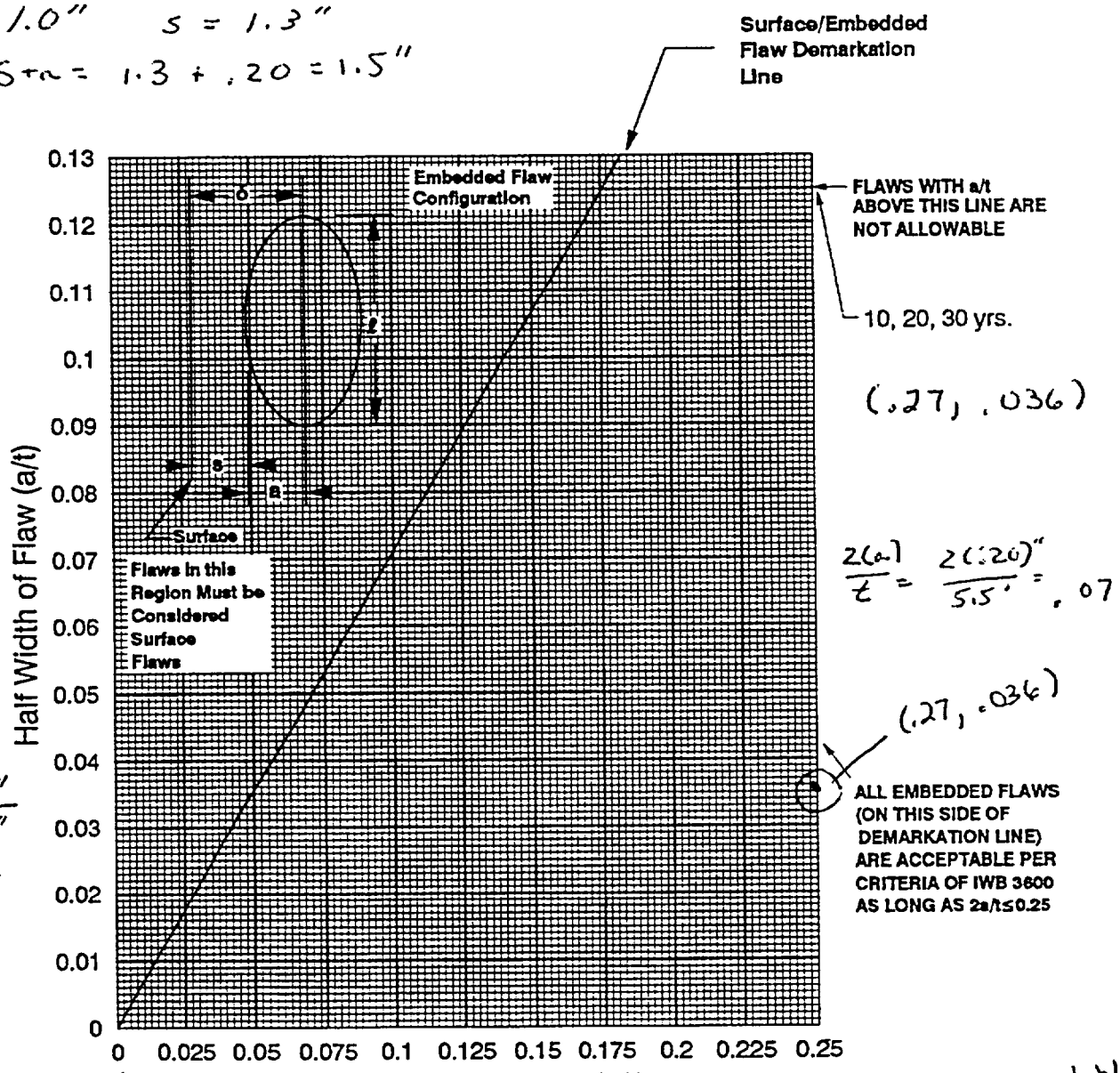

$\frac{2(a)}{t} = \frac{2(.20)''}{5.5''} = .07$

$a/t = \frac{.20''}{5.5''} = .036$

$\delta/t = \frac{1.5''}{5.5} = .27$

FLAW #7 is acceptable per WCAP 14166, Section A-2 Page A2-7.

Figure A-2.4 Flaw Evaluation Chart for the Tubesheet-Channel Head Junction for Prairie Island Units 1 and 2

X	Inside Surface	___	Surface Flaw	X	Longitudinal Flaw
X	Outside Surface	X	Embedded Flaw	X	Circumferential Flaw

Prepared By: Ken L. Gall 2-14-02
D.S. Wilkins 2-14-02

Flaw Sizing Calculations Using Metal Path for Vessel Welds > 2"

For surface and subsurface single planar flaws oriented in plane normal to pressure retaining surface

ASME SECT XI 1989 W/ NO ADDENDA SPC INITIAL TO VERIFY

ISI Report # 2002U010 Evaluation Performed By: S. Clay Date: 02/10/02
Flaw # #7 Reviewed By. J. Wren Date: 02/13/02

Length
Length of the flaw "ℓ" is determined by finding the difference between L1 and L2 for perpendicular scans, W1 and W2 for parallel scans.
L and W values are from page 2 of the UT report.
ℓ = 1.5" (L2) - 2.5" (L1) = -1.0" inches.

Thickness
Thickness of the component at the location of the flaw, using UT or nom wall (circle one).
This value is from page 1 of the UT report.
"t" = 5.50 inches

Calibration
The measured angle in the calibration block was 46° degrees

Calculations using metal path From page 2 of the UT report, Scan # 4
The flaw exhibited 20% DAC at 1.918 and 2.474 inches MP. Max amplitude is 2.120 inches MP with the transducer exit point at 2.30 inches from the centerline of the weld and 351.50 inches from the 0" reference. (Use of 20% DAC vs. 50% max amp for indications > 100% DAC is conservative.)

*) Determine correction factor due to curvature.
Radius = 67.94" (R). Surface distance to max amp point = 1.525" (C). C/R = .022 TAN.
INV TAN = 1.286 . COS = 1.000 . (R / COS) – R = .000" correction factor.

1) Determine the upper depth of the flaw from the exam surface.
1.918" (metal path at 20% upper) * COS of the measured angle 46° = 1.332" - .000" correction factor = 1.332 inches depth.

2) Determine the lower depth of the flaw from the exam surface.
2.474" (metal path at 20% lower) * COS of the measured angle 46° = 1.719" - .000" correction factor = 1.719 inches depth.

3) Determine the depth of the flaw from the exam surface at the maximum amplitude point.
2.120" (metal path at maximum amplitude point) * COS of the measured angle 46° = 1.473" - .000" correction factor = 1.473 inches depth.

4) Determine the distance from 0" reference to the maximum amplitude point of the flaw.
2.120" (metal path at maximum amplitude point) squared = 4.494 (a^2)
1.332" (depth at maximum amplitude point, before correction) squared = 1.774 (b^2)
$\sqrt{a^2 - b^2}$ = 1.649 inches of surface distance to the flaw from the transducer exit point.
351.50 (Lmax) + or – 1.649" (surf dist) = 349.851 inches from 0" reference.
(+ or – based on scan direction)

5) Determine S by picking the smaller of the following;
S = 1.332" (result of 1) = distance between exam surface and the upper flaw tip
>> OR <<
S = 5.50 (part "t") – 1.719 (result of 2) = 3.781" distance between the side opposite exam surface and the lower flaw tip

6) Determine 2d in though wall thickness.
1.719" (from step 2) – 1.332" (from step 1) = .387 inches.

Flaw Sizing Calculations Using Metal Path for Vessel Welds > 2"

For surface and subsurface single planar flaws oriented in plane normal to pressure retaining surface

Determination of surface or subsurface

0.4d = (2d / 2) * 0.4 = .077"

Compare to S (from step 5)

If S is less than 0.4d, the flaw is **surface**. a = 2d + S = N/A inches.

If S is greater than or equal to 0.4a the flaw is **sub-surface** a = 2a / 2 = .194 inches.

l = 1.0" (for a/l > 0.5, l = 2a) t = 5.50" (part thickness)

a = .20" (surf or sub surf, circle one) S = 1.3"

39 121

ISI Flaw Sizing Worksheet

Site/Unit:	NMC / PI2	Procedure:	ISI-UT-3	Outage No.:	PI2RF2002
Summary No.:	502618	Procedure Revision/FC:	9 / ---	Report No.:	2002U010
Workscope:	ISI	Work Order No :	0106946	Page:	of

1) Flaw Number 8 45°
2) Item Number B2.40
3) ISI Interval 3rd Interval — OK Reviewer JPW
4) Code Edition & Addenda 89 no addenda — OK Reviewer JPW
5) Method UT
6) Flaw Sketch (See Below) — OK Reviewer JPW

Flaw View

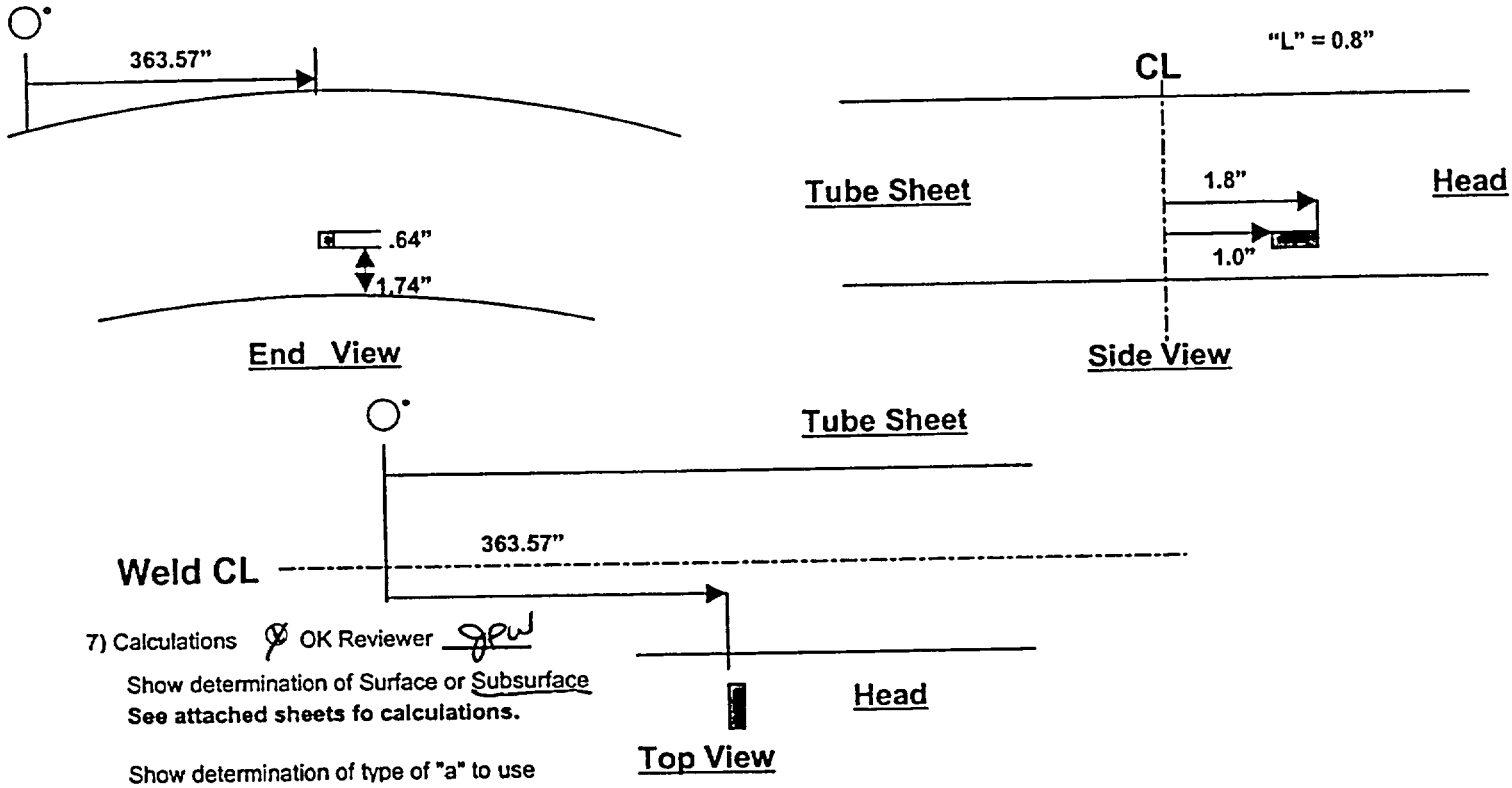

7) Calculations OK Reviewer JPW

Show determination of Surface or Subsurface
See attached sheets fo calculations.

Show determination of type of "a" to use
See attached sheets fo calculations.

8) ISI-FE-1 Paragraph ~~2.0~~ 6.1 SPC - "Rounding-off Method" was used ⦿ Yes Preparer SPC OK Reviewer JPW

9) Code Flaw Dimensions OK Reviewer JPW

"l" = .80" "a" = .30" "t *nominal*" = N/A "t *measured*" = 5.5 "s" = 1.7" "w" = N/A

10) Flaw Type OK Reviewer JPW Subsurface Planar (UT/RT)

11) Flaw Charactenzation Figure OK Reviewer JPW IWA-3320-1

12) Flaw Characterization Figure Number FLAW #2

13) Was IWA-3300 Flaw Characterization followed? ⦿ Yes ○ No If no, why?

14) The correct Code Edition and Addenda was available and used. ⦿ Yes Preparer SPC OK Reviewer JPW

15) Prepared by and date Sean P. Clay 2-10-02

The results are correct and the methodology used is in accordance with applicable codes, standards, specifications and procedures.

16) Review by and date 2-19-02

The review assures that the results are correct and the methodology used is in accordance with applicable codes, standards, specifications and procedures.

41 121

ISI Flaw Disposition Worksheet

NMC

Site/Unit:	NMC / PI2	Procedure:	ISI-UT-3	Outage No.:	PI2RF2002
Summary No.:	502618	Procedure Revision/FC:	9 /	Report No.:	2002U010
Workscope:	ISI	Work Order No.:	0106946	Page:	___ of ___

1) Flaw Number #8
2) Item Number B-B B2.40
3) ISI Interval 3rd
4) Code Edition & Addenda 1989 No Addenda
5) Acceptance Standard IWB-3510
6) Calculations (See Below)

OK Reviewer DSW
OK Reviewer DSW
OK Reviewer DSW
OK Reviewer DSW

FLAW IS SUBSURFACE

$l = .80''$ $t = 5.50''$

$a = .30''$ $S = 1.7''$

$a/l = \frac{.30''}{.80''} = .38$

$a/t_{actual} \times 100\% = \frac{.30''}{5.5''} \times 100\% = 5.5\%$ $Y = S/a = \frac{1.7}{.30} = 5.67$ $\therefore Y = 1$

FROM TABLE IWB-3510-1

0.35	5.1Y	
0.38	X	
0.40	5.8Y	

$\frac{0.38 - 0.35}{0.40 - 0.35} = \frac{X - 5.1Y}{5.8Y - 5.1Y}$

$.03(.7Y) = .05X - .255Y$

$.021Y + .255Y = .05X$

$X = 5.52\%$

$X = a/t_{allowed}\% = 5.52\%$

$a/t_{actual} = 5.5\%$

7) Results OK Reviewer DSW

a/l = .38 Code allowable a/t% = 5.52% Calculated a/t% = 5.5% Laminar flaw surface area: (0.75 | w) = N/A

8) Table used for analysis OK Reviewer DSW IWB-3510-1

9) Was linear interpolation used? ☑ Yes ○ No If no, why?

10) Was IWA-3200 Significant Digits For Limiting Values followed? ☑ Yes ○ No If no, why?

11) The correct Code Edition and Addenda was available and used. ☑ Yes Preparer KJL OK Reviewer DSW

12) Statement of acceptability or rejectability with basis. OK Reviewer DSW ● Accept ○ Reject

- ☑ (a/t) Code allowable > (a/t) calculated
- ○ OEM flaw evaluation handbook (see attached analysis)
- ○ (a/t) Code allowable < (a/t) calculated

13) Prepared by and date Karen L. Lee 2-14-02

The results are correct and the methodology used is in accordance with applicable codes, standards, specifications and procedures.

14) Engineering review by and date Daniel S. Whitten 2-14-2002

This review assures that the results are correct and the methodology used is in accordance with applicable codes, standards, specifications and procedures.

15) Approved by and date Monica Uh 2/18/02

This approval assures that all involved with this flaw sizing and flaw disposition were aware of the necessity that the results and the methodology are correct and in accordance with applicable codes, standards, specifications and procedures.

Flaw Sizing Calculations Using Metal Path for Vessel Welds > 2"

For surface and subsurface single planar flaws oriented in plane normal to pressure retaining surface

ASME SECT XI 1989 W/ NO ADDENDA SPC INITIAL TO VERIFY

ISI Report # 2002U010 Evaluation Performed By: S. Clay Date: 02/10/02
Flaw # #8 Reviewed By: J. Wren Date: 02/10/02

Length
Length of the flaw "*l*" is determined by finding the difference between L1 and L2 for perpendicular scans, W1 and W2 for parallel scans.
L and W values are from page 2 of the UT report.
l = 2.2" (L2) - 3.0" (L1) = - 0.8" inches.

Thickness
Thickness of the component at the location of the flaw, using UT or nom wall (circle one).
This value is from page 1 of the UT report.
"t" = 5.50 inches

Calibration
The measured angle in the calibration block was 46° degrees

Calculations using metal path From page 2 of the UT report, Scan # 3
The flaw exhibited 20% DAC at 4.591 and 5.505 inches MP. Max amplitude is 4.894 inches MP with the transducer exit point at 2.40 inches from the centerline of the weld and 360.05 inches from the 0" reference. (Use of 20% DAC vs. 50% max amp for indications > 100% DAC is conservative.)

*) Determine correction factor due to curvature.
Radius = 67.94" (R). Surface distance to max amp point = 3.520" (C). C/R = .052 TAN.
INV TAN = 2.966 . COS = .999 . (R / COS) – R = ..068" correction factor.

1) Determine the upper depth of the flaw from the exam surface.
4.591" (metal path at 20% upper) * COS of the measured angle 46° = 3.189" - .068" correction factor = 3.121 inches depth.

2) Determine the lower depth of the flaw from the exam surface
5.505" (metal path at 20% lower) * COS of the measured angle 46° = 3.824" - .068" correction factor = 3.756 inches depth.

3) Determine the depth of the flaw from the exam surface at the maximum amplitude point.
4.894" (metal path at maximum amplitude point) * COS of the measured angle 46° = 3.400" - .068" correction factor = 3.332 inches depth.

4) Determine the distance from 0" reference to the maximum amplitude point of the flaw.
4.894" (metal path at maximum amplitude point) squared = 23.951 (a^2)
3.400" (depth at maximum amplitude point, before correction) squared = 11.560 (b^2)
$\sqrt{a^2 - b^2}$ = 3.520 inches of surface distance to the flaw from the transducer exit point.
360.05 (Lmax) + or – 3.520" (surf dist) = 363.570 inches from 0" reference.
(+ or – based on scan direction)

5) Determine S by picking the smaller of the following;
S = 3.121" (result of 1) = distance between exam surface and the upper flaw tip
>> OR <<
S = 5.50 (part "t") – 3.756 (result of 2) = 1.744" distance between the side opposite exam surface and the lower flaw tip

6) Determine 2d in though wall thickness.
3.756" (from step 2) – 3.121" (from step 1) = .635 inches.

Flaw Sizing Calculations Using Metal Path for Vessel Welds > 2"

For surface and subsurface single planar flaws oriented in plane normal to pressure retaining surface

Determination of surface or subsurface

0.4d = (2d / 2) * 0.4 = .127"

Compare to S (from step 5)

If S is less than 0.4d, the flaw is **surface**. a = 2d + S = N/A inches.

If S is greater than or equal to 0.4a the flaw is **sub-surface**. a = 2a / 2 = .318 inches.

l = .80" (for a/*l* > 0.5, *l* = 2a)

a = .30" (surf or sub surf, circle one)

t = 5.50" (part thickness)

S = 1.7"

43 121

REPORT# _____

ISI Flaw Sizing Worksheet

Site/Unit.	NMC / PI2	Procedure:	ISI-UT-3	Outage No.:	PI2RF2002
Summary No :	502618	Procedure Revision/FC:	9 / ---	Report No.:	2002U010
Workscope:	ISI	Work Order No.:	0106946	Page:	___ of ___

1) Flaw Number: 9 AND 10
2) Item Number: B2.40
3) ISI Interval: 3rd Interval — ⊗ OK Reviewer SPW
4) Code Edition & Addenda: 89 no addenda — ⊗ OK Reviewer SPW
5) Method: UT
6) Flaw Sketch (See Below) — ⊗ OK Reviewer SPW

Flaw View

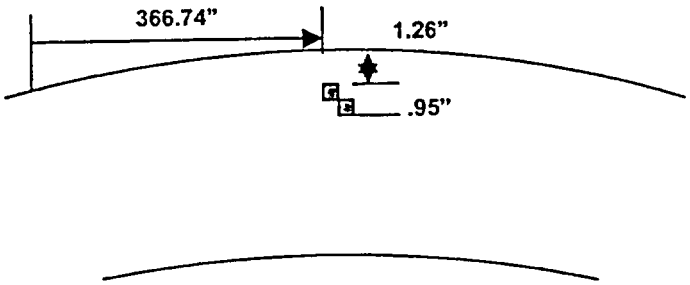

End View

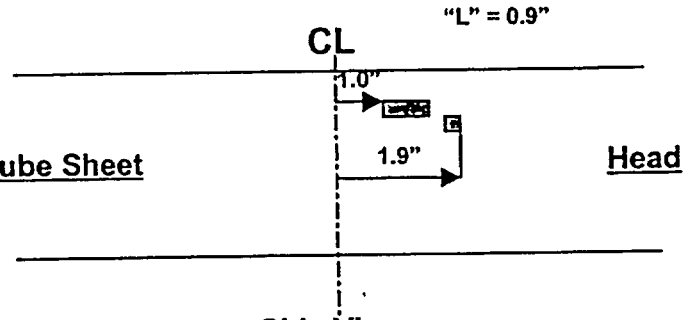

Side View

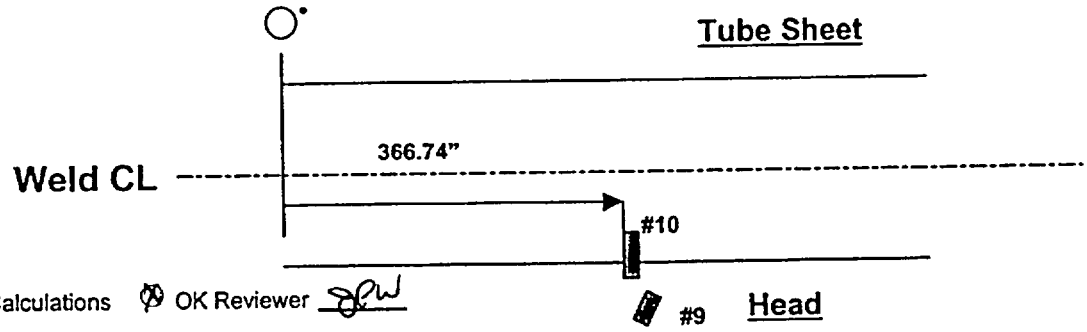

Top View

7) Calculations ⊗ OK Reviewer SPW

Show determination of Surface or Subsurface
See attached sheets fo calculations.

Show determination of type of "a" to use
See attached sheets fo calculations.

8) ISI-FE-1 Paragraph ~~2.0~~ 6.1 "Rounding-off Method" was used ⊙ Yes Preparer SPC ⊗ OK Reviewer SPW

9) Code Flaw Dimensions ⊗ OK Reviewer SPW

"l" = .9" "a" = .45" "t *nominal*" = N/A "t *measured*" = 5.5 "s" = 1.3" "w" = N/A

10) Flaw Type ⊗ OK Reviewer SPW Subsurface Planar (UT/RT)

11) Flaw Characterization Figure ⊗ OK Reviewer SPW IWA-3320-1

12) Flaw Characterization Figure Number FLAW # 1

13) Was IWA-3300 Flaw Characterization followed? ⊙ Yes ○ No If no, why?

14) The correct Code Edition and Addenda was available and used. ⊙ Yes Preparer SPC ⊗ OK Reviewer SPW

15) Prepared by and date Sean P. Clay 2-10-02

The results are correct and the methodology used is in accordance with applicable codes, standards, specifications and procedures.

16) Review by and date 2-19-02

The review assures that the results are correct and the methodology used is in accordance with applicable codes, standards, specifications and procedures.

ISI Flaw Disposition Worksheet

Site/Unit: NMC 1 PIZ
Procedure: ISI-UT-3
Outage No.: PIZ RF 2002
Summary No.: 502618
Procedure Revision/FC: 9 1
Report No.: 2002U010
Workscope: ISI
Work Order No.: 0106946
Page: ____ of ____

1) Flaw Number #9 & #10
2) Item Number B-B B2.40
3) ISI Interval 3rd — OK Reviewer DSW
4) Code Edition & Addenda 1989 No Addenda — OK Reviewer DSW
5) Acceptance Standard IWB-3510 — OK Reviewer DSW
6) Calculations (See Below) — OK Reviewer DSW

FLAW IS SUBSURFACE

$l = .9''$ $t = 5.50''$
$a = .45''$ $S = 1.3''$
$a/l = \frac{.45''}{.9''} = .5''$ $a/t_{actual} \times 100\% = \frac{.45''}{5.5''} \times 100\% = 8.2\%$ $Y = S/a = \frac{1.3''}{.45''} = 2.9 \therefore Y = 1$

FROM TABLE IWB 3510-1 $a/t_{allowed} = 7.6Y$ @ .50

$a/t_{allowed} = 7.6\%$ $a/t_{actual} = 8.2\%$

Flaw is not acceptable per IWB TABLE IWB 3510-1.
Continue analysis per WCAP 14166 - FLAW EVALUATION HANDBOOK

7) Results — OK Reviewer DSW
a/l = .5" Code allowable a/t% = 7.6% Calculated a/t% = 8.2% Laminar flaw surface area: (0.75 | w) = N/A
8) Table used for analysis — OK Reviewer DSW IWB-3510-1
9) Was linear interpolation used? ○ Yes ● No If no, why?
ON TABLE.
10) Was IWA-3200 Significant Digits For Limiting Values followed? ● Yes ○ No If no, why?

11) The correct Code Edition and Addenda was available and used. ● Yes Preparer [signature] ○ OK Reviewer DSW
12) Statement of acceptability or rejectability with basis. ● OK Reviewer DSW ● Accept ○ Reject
○ (a/t) Code allowable > (a/t) calculated
● OEM flaw evaluation handbook (see attached analysis)
● (a/t) Code allowable < (a/t) calculated

FLAW #9 & #10 are acceptable per WCAP 14166 Section A-2 Page. A2-7.

13) Prepared by and date [signature] 2-14-02
The results are correct and the methodology used is in accordance with applicable codes, standards, specifications and procedures.

14) Engineering review by and date [signature] 2-14-2002
This review assures that the results are correct and the methodology used is in accordance with applicable codes, standards, specifications and procedures.

15) Approved by and date [signature] 2/18/02
This approval assures that all involved with this flaw sizing and flaw disposition were aware of the necessity that the results and the methodology are correct and in accordance with applicable codes, standards, specifications and procedures.

Outage # - PI2RF2002
Summary # 502618
FLAW # 9 & #10
a = .45" t = 5.50"
ℓ = .9" S = 1.3"
δ = S+a = 1.3" + .45" = 1.75"

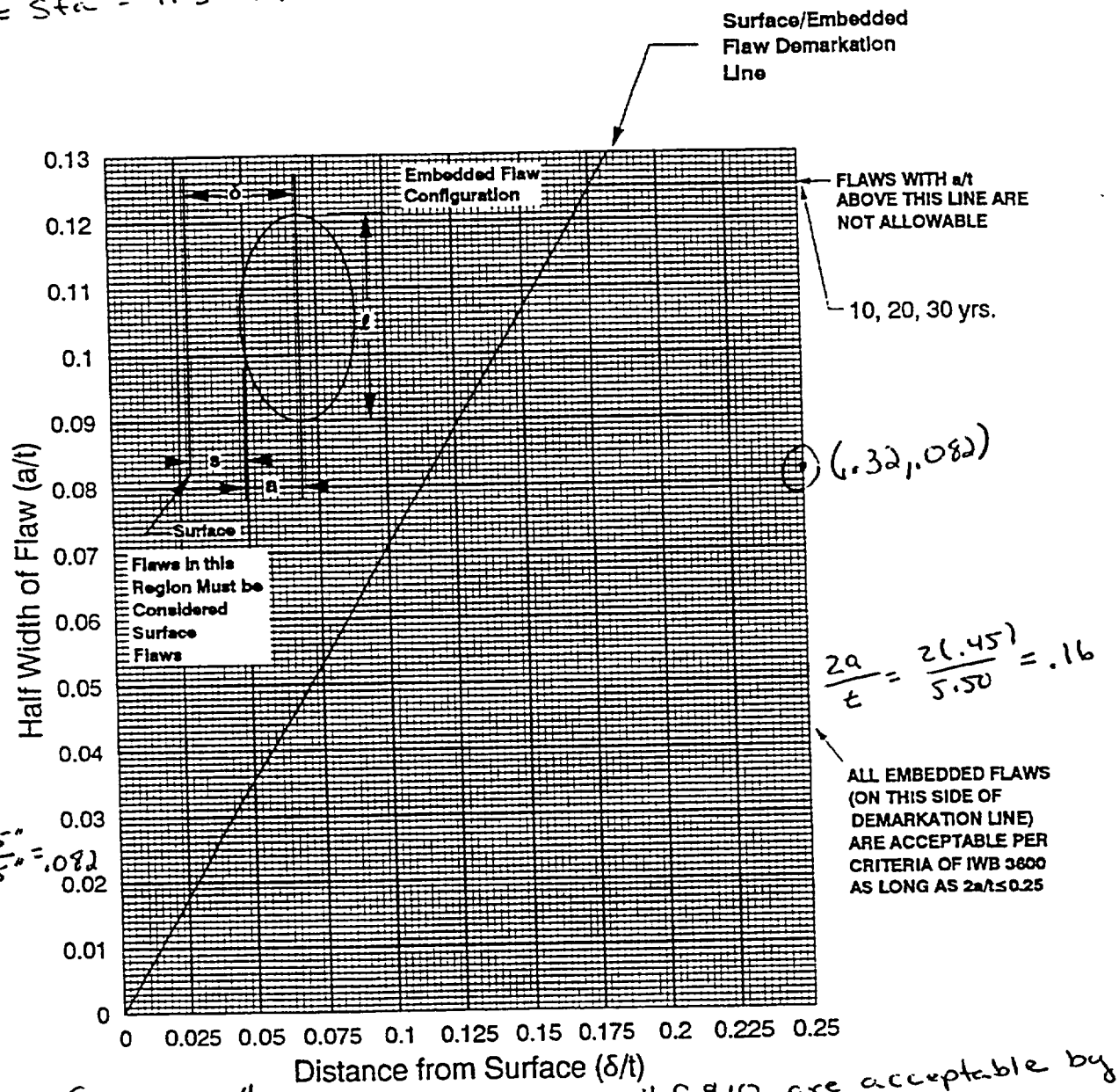

$\frac{2a}{t} = \frac{2(.45)}{5.50} = .16$

$a/t = \frac{.45"}{5.5"} = .082$

$\delta/t = \frac{1.75"}{5.5"} = .32$

FLAWS # 9 & 10 are acceptable by analysis per WCAP 14166 Section A-2 Page A2-7.

Figure A-2.4 Flaw Evaluation Chart for the Tubesheet-Channel Head Junction for Prairie Island Units 1 and 2

X	Inside Surface		Surface Flaw	X	Longitudinal Flaw
X	Outside Surface	X	Embedded Flaw	X	Circumferential Flaw

Prepared By: [signature] 2-14-02

Flaw Sizing Calculations Using Metal Path for Vessel Welds > 2"

For surface and subsurface single planar flaws oriented in plane normal to pressure retaining surface

ASME SECT XI 1989 W/ NO ADDENDA SPC INITIAL TO VERIFY

ISI Report # 2002U010 Evaluation Performed By: S. Clay Date: 02/10/02
Flaw # #9 & #10 Reviewed By: J. Wren Date: 02/13/02

Length
Length of the flaw "l" is determined by finding the difference between L1 and L2 for perpendicular scans, W1 and W2 for parallel scans.
L and W values are from page 2 of the UT report.
l = 1.0" (L2) - 1.9" (L1) = -.9 inches.

Thickness
Thickness of the component at the location of the flaw, using UT or nom wall (circle one).
This value is from page 1 of the UT report.
"t" = 5.50 inches

Calibration
The measured angle in the calibration block was 46° degrees

Calculations using metal path From page ~~3~~ 5 of the UT report, Scan # 3
The flaw exhibited 20% DAC at 1.816 and 3.178 inches MP. Max amplitude is 2.976 inches MP with the transducer exit point at 1.70 inches from the centerline of the weld and 364.60 inches from the 0" reference. (Use of 20% DAC vs. 50% max amp for indications > 100% DAC is conservative.)

*) Determine correction factor due to curvature.
Radius = 67.94" (R). Surface distance to max amp point = 2.141" (C). C/R = .032 TAN.
INV TAN = 1.805 . COS = 1.000 . (R / COS) – R = .000" correction factor.

1) Determine the upper depth of the flaw from the exam surface.
1.816" (metal path at 20% upper) * COS of the measured angle 46° = 1.261" - .000" correction factor = 1.261 inches depth.

2) Determine the lower depth of the flaw from the exam surface.
3.178" (metal path at 20% lower) * COS of the measured angle 46° = 2.208" - .000" correction factor = 2.208 inches depth.

3) Determine the depth of the flaw from the exam surface at the maximum amplitude point.
2.976" (metal path at maximum amplitude point) * COS of the measured angle 46° = 2.067" - .000" correction factor = 2.067 inches depth.

4) Determine the distance from 0" reference to the maximum amplitude point of the flaw.
2.976" (metal path at maximum amplitude point) squared = 8.857 (a^2)
2.067" (depth at maximum amplitude point, before correction) squared = 4.274 (b^2)
$\sqrt{a^2 - b^2}$ = 2.141 inches of surface distance to the flaw from the transducer exit point.
364.60 (Lmax) + or – 2.141" (surf dist) = 366.741 inches from 0" reference.
(+ or – based on scan direction)

5) Determine S by picking the smaller of the following;
S = 1.261" (result of 1) = distance between exam surface and the upper flaw tip
>> OR <<
S = 5.50 (part "t") – 2.208 (result of 2) = 3.292" distance between the side opposite exam surface and the lower flaw tip

6) Determine 2d in though wall thickness.
2.208" (from step 2) – 1.261" (from step 1) = .947 inches.

Flaw Sizing Calculations Using Metal Path for Vessel Welds > 2"

For surface and subsurface single planar flaws oriented in plane normal to pressure retaining surface

Determination of surface or subsurface

0.4d = (2d / 2) * 0.4 = **.189"**

Compare to S (from step 5)

If S is less than 0.4d, the flaw is **surface.** a = 2d + S = **N/A** inches.

If S is greater than or equal to 0.4a the flaw is **sub-surface.** a = 2a / 2 = **.474** inches.

l = **.9"** (for a/*l* > 0.5, *l* = 2a) t = **5.50"** (part thickness)

a = **.45"** (surf or sub surf, circle one) S = **1.3"**

48 121

ISI Flaw Sizing Worksheet

Site/Unit:	NMC / PI2	Procedure:	ISI-UT-3	Outage No.:	PI2RF2002
Summary No.:	502618	Procedure Revision/FC:	9 / --	Report No.:	2002U010
Workscope:	ISI	Work Order No.:	0106946	Page:	of

1) Flaw Number # 11 45°
2) Item Number B2.40
3) ISI Interval 3rd Interval ☒ OK Reviewer JPW
4) Code Edition & Addenda 89 no addenda ☒ OK Reviewer JPW
5) Method UT
6) Flaw Sketch (See Below) ☒ OK Reviewer JPW

Flaw View

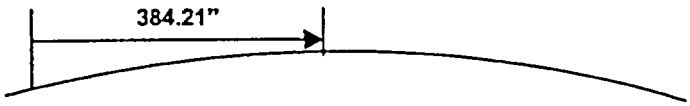

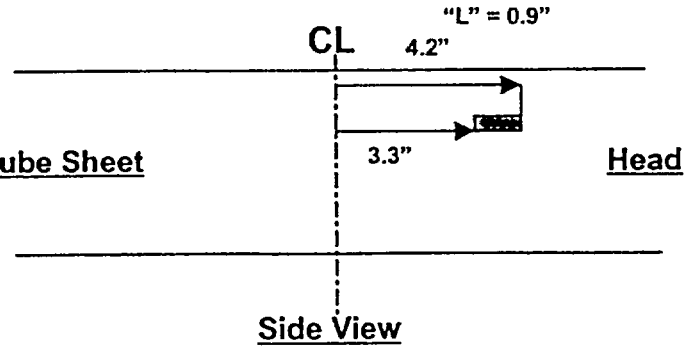

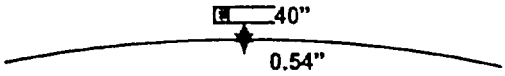

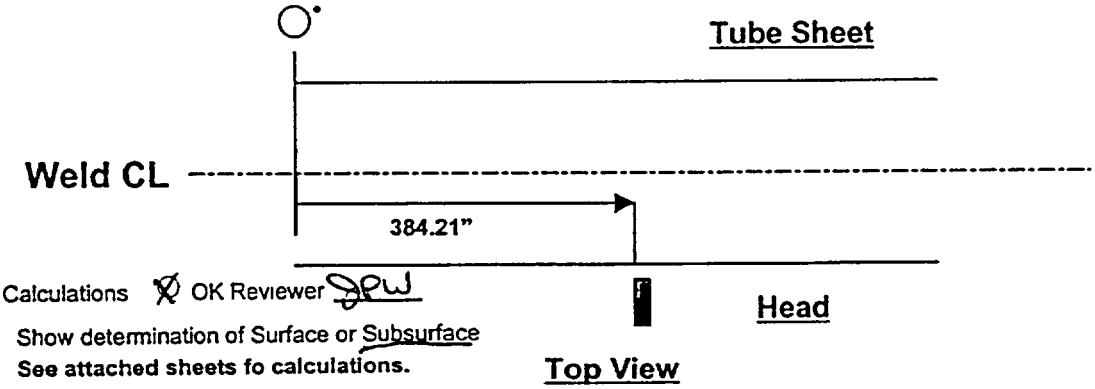

7) Calculations ☒ OK Reviewer JPW

Show determination of Surface or Subsurface
See attached sheets fo calculations.

Show determination of type of "a" to use
See attached sheets fo calculations.

8) ISI-FE-1 Paragraph ~~7.0~~ 6.1 SPC - "Rounding-off Method" was used ⊙ Yes Preparer SPC ☒ OK Reviewer JPW

9) Code Flaw Dimensions ☒ OK Reviewer JPW

"l" = .90" "a" = .20" "t *nominal*" = N/A "t *measured*" = 5.5 "s" = .55" "w" = N/A

10) Flaw Type ☒ OK Reviewer JPW Subsurface Planar (UT/RT)

11) Flaw Characterization Figure ☒ OK Reviewer JPW IWA-3320-1

12) Flaw Characterization Figure Number FLAW # 2

13) Was IWA-3300 Flaw Characterization followed? ⊙ Yes ○ No If no, why?

14) The correct Code Edition and Addenda was available and used. ⊙ Yes Preparer SPC ☒ OK Reviewer JPW

15) Prepared by and date SEAN P. CLAY 2-11-02

The results are correct and the methodology used is in accordance with applicable codes, standards, specifications and procedures.

16) Review by and date 2-19-02

The review assures that the results are correct and the methodology used is in accordance with applicable codes, standards, specifications and procedures.

50 121

ISI Flaw Disposition Worksheet

Site/Unit: NMC1 PI2 | Procedure: ISI-UT-3 | Outage No.: PI2 RF2002
Summary No.: 502618 | Procedure Revision/FC: 9 1 | Report No.: 2002 U010
Workscope: ISI | Work Order No.: 01 06946 | Page: ____ of ____

1) Flaw Number 11 | 3) ISI Interval 3rd | OK Reviewer DSW
2) Item Number B-B B2.40 | 4) Code Edition & Addenda 1989 No Addenda | OK Reviewer DSW
5) Acceptance Standard IWB-3510 | OK Reviewer DSW
6) Calculations (See Below) | OK Reviewer DSW

Flaw is Subsurface
$\ell = .90''$ $t = 5.50''$
$a = .20''$ $S = .55''$

$a/\ell = \frac{.20''}{.90''} = .22$

$a/t_{actual} \times 100\% = .20''/5.50'' = .036 \times 100\% = 3.6\%$

$Y = S/a = \frac{.55''}{.20''} = 2.75 \therefore Y = 1$

$a/t_{allowed}$

Per Table IWB-3510-1

0.20	3.3Y
0.22	X
0.25	3.8Y

$\frac{0.22 - 0.20}{0.25 - 0.20} = \frac{X - 3.3Y}{3.8Y - 3.3Y}$

$\frac{0.02}{0.05} = \frac{X - 3.3Y}{.5Y}$

$.4(.5Y) = X - 3.3Y$

$3.3Y + .2Y = X = a/t_{allowed} \rightarrow 3.5\%$

FLAW IS NOT ACCEPTABLE PER IWB TABLE IWB-3510-1 CONTINUE FLAW EVALUATION Analysis PER WCAP 14166 - FLAW EVALUATION HANDBOOK

7) Results OK Reviewer DSW
a/l = .22 | Code allowable a/t% = 3.5% | Calculated a/t% = 3.6% | Laminar flaw surface area: (0.75 | w) = N/A
8) Table used for analysis OK Reviewer DSW IWB-3510-1
9) Was linear interpolation used? ☑ Yes ○ No If no, why?

10) Was IWA-3200 Significant Digits For Limiting Values followed? ☑ Yes ○ No If no, why?

11) The correct Code Edition and Addenda was available and used. ☑ Yes Preparer KLL OK Reviewer DSW
12) Statement of acceptability or rejectability with basis. OK Reviewer DSW ☑ Accept ○ Reject
○ (a/t) Code allowable > (a/t) calculated
OEM flaw evaluation handbook (see attached analysis)
(a/t) Code allowable < (a/t) calculated

FLAW #11 is acceptable by analysis WCAP 14166 Section A-2 Page A2-7

13) Prepared by and date Karen L. Lal 2-14-02
The results are correct and the methodology used is in accordance with applicable codes, standards, specifications and procedures.

14) Engineering review by and date Daniel A. Whitaker 2-14-2002
This review assures that the results are correct and the methodology used is in accordance with applicable codes, standards, specifications and procedures.

15) Approved by and date Thomas Vik 2/18/02
This approval assures that all involved with this flaw sizing and flaw disposition were aware of the necessity that the results and the methodology are correct and in accordance with applicable codes, standards, specifications and procedures.

Outage # PI2RF2002
Summary # 502618
WO # 0106946
FLAW # 11
FLAW IS SUBSURFACE
a = .20" t = 5.50"
l = .90" S = .55
δ = S + a = .55 + .20 = .75

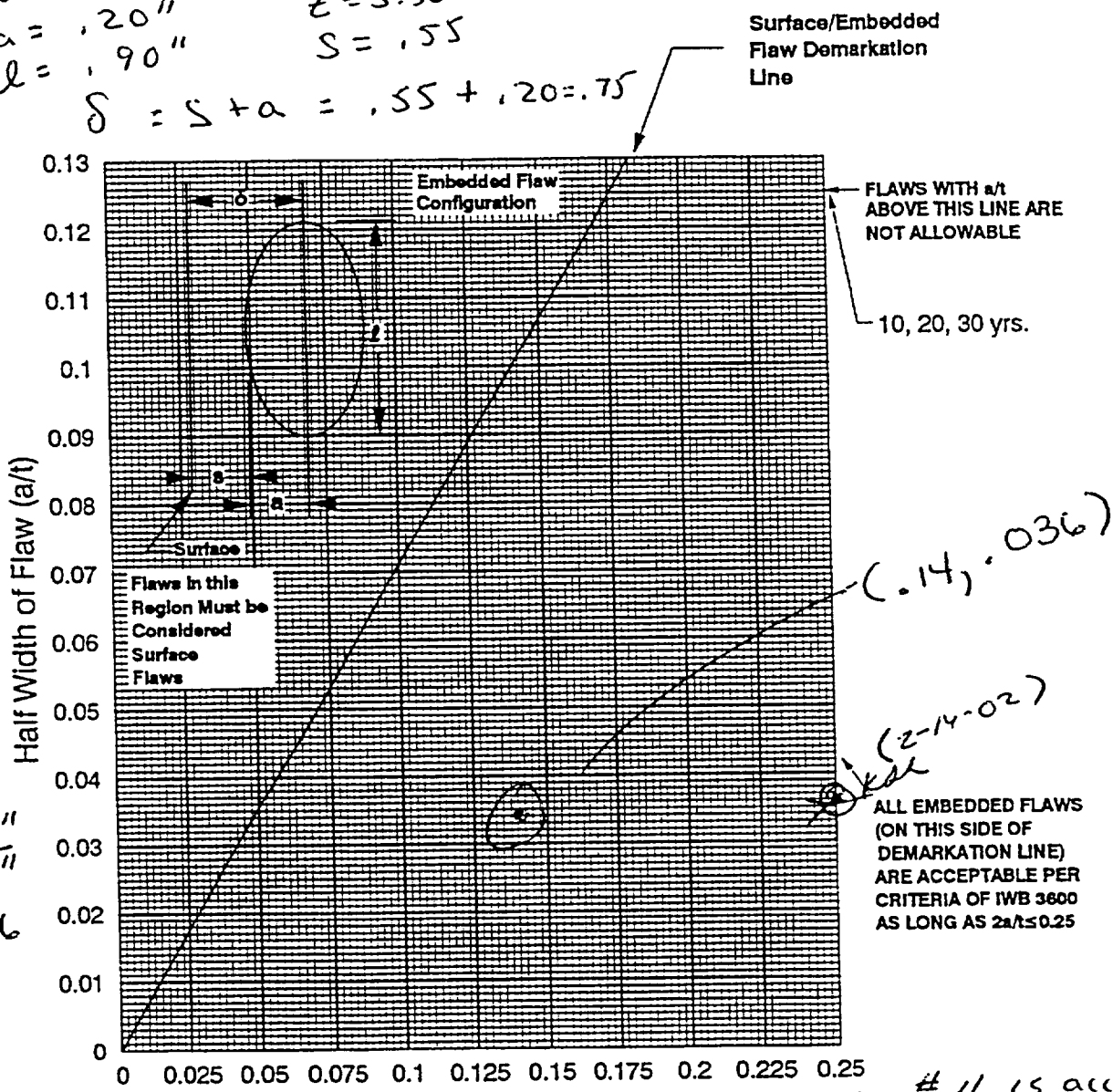

a/t = .20" / 5.50" = .036

δ/t = .75" / 5.50" = .14

FLAW # 11 is acceptable by analysis WCAP 14166 Section A-2 Page A2-7.

Figure A-2.4 Flaw Evaluation Chart for the Tubesheet-Channel Head Junction for Prairie Island Units 1 and 2

X	Inside Surface		Surface Flaw	X	Longitudinal Flaw
X	Outside Surface	X	Embedded Flaw	X	Circumferential Flaw

Prepared By: [illegible] 2-14-02

Flaw Sizing Calculations Using Metal Path for Vessel Welds > 2"

For surface and subsurface single planar flaws oriented in plane normal to pressure retaining surface

ASME SECT XI 1989 W/ NO ADDENDA SPC INITIAL TO VERIFY

ISI Report # 2002U010 Evaluation Performed By: S. Clay Date: 02/11/02
Flaw # #11 Reviewed By: J. Wren Date: 02/13/02

Length
Length of the flaw "l" is determined by finding the difference between L1 and L2 for perpendicular scans, W1 and W2 for parallel scans.
L and W values are from page 2 of the UT report.
l = 3.3" (L2) - 4.2" (L1) = - 0.9" inches.

Thickness
Thickness of the component at the location of the flaw, using UT or nom wall (circle one).
This value is from page 1 of the UT report.
"t" = 5.50 inches

Calibration
The measured angle in the calibration block was 46° degrees

Calculations using metal path From page ~~3~~ 5 of the UT report, Scan # 4 JW 2-14-02
The flaw exhibited 20% DAC at 6.860 and 7.434 inches MP. Max amplitude is 7.079 inches MP with the transducer exit point at 3.60 inches from the centerline of the weld and 389.30 inches from the 0" reference. (Use of 20% DAC vs. 50% max amp for indications > 100% DAC is conservative.)

*) Determine correction factor due to curvature.
Radius = 67.94" (R). Surface distance to max amp point = 5.092" (C). C/R = .075 TAN.
INV TAN = 4.286 . COS = .997 . (R / COS) – R = .204" correction factor.

1) Determine the upper depth of the flaw from the exam surface.
6.860" (metal path at 20% upper) * COS of the measured angle 46° = 4.765" - .204" correction factor = 4.561 inches depth.

2) Determine the lower depth of the flaw from the exam surface.
7.434" (metal path at 20% lower) * COS of the measured angle 46° = 5.164" - .204" correction factor = 4.960 inches depth.

3) Determine the depth of the flaw from the exam surface at the maximum amplitude point.
7.079" (metal path at maximum amplitude point) * COS of the measured angle 46° = 4.917" - .204" correction factor = 4.713 inches depth.

4) Determine the distance from 0" reference to the maximum amplitude point of the flaw.
7.079" (metal path at maximum amplitude point) squared = 50.112 (a^2)
4.917" (depth at maximum amplitude point, before correction) squared = 24.177 (b^2)
$\sqrt{a^2 - b^2}$ = 5.093 inches of surface distance to the flaw from the transducer exit point.
389.30 (Lmax) + or – 5.093" (surf dist) = 384.207 inches from 0" reference.
(+ or – based on scan direction)

5) Determine S by picking the smaller of the following;
S = 4.561" (result of 1) = distance between exam surface and the upper flaw tip
>> OR <<
S = 5.50 (part "t") – 4.960 (result of 2) = 0.540" distance between the side opposite exam surface and the lower flaw tip

6) Determine 2d in though wall thickness.
4.960" (from step 2) – 4.561" (from step 1) = .399 inches.

52 121

Flaw Sizing Calculations Using Metal Path for Vessel Welds > 2"

For surface and subsurface single planar flaws oriented in plane normal to pressure retaining surface

Determination of surface or subsurface

0.4d = (2d / 2) * 0.4 = .080"

Compare to S (from step 5)

If S is less than 0.4d, the flaw is **surface**. a = 2d + S = N/A inches.

If S is greater than or equal to 0.4a the flaw is **sub-surface**. a = 2a / 2 = .200 inches.

l = .90" (for $a/l > 0.5$, $l = 2a$) t_l = 5.50" (part thickness)

a = .20" (surf or sub surf, circle one) S = .55"

53 121

ISI Flaw Sizing Worksheet

Site/Unit:	NMC / PI2	Procedure:	ISI-UT-3	Outage No.:	PI2RF2002
Summary No.:	502618	Procedure Revision/FC:	9 / ---	Report No.:	2002U010
Workscope:	ISI	Work Order No.:	0106946	Page:	___ of ___

1) Flaw Number #12 45°
2) Item Number B2.40
3) ISI Interval 3rd Interval ☒ OK Reviewer JPW
4) Code Edition & Addenda 89 no addenda ☒ OK Reviewer JPW
5) Method UT
6) Flaw Sketch (See Below) ☒ OK Reviewer JPW

Flaw View

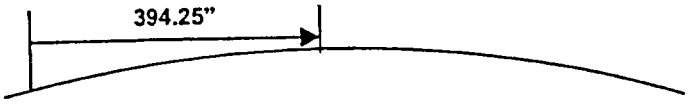

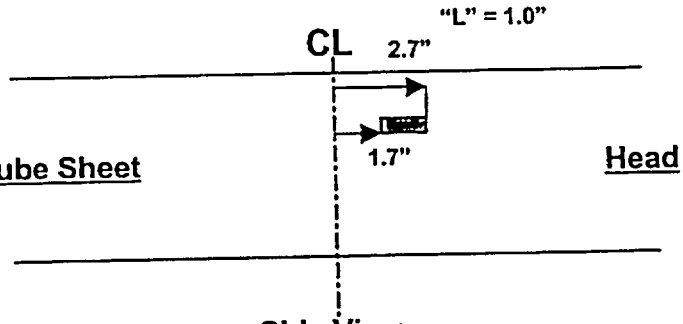

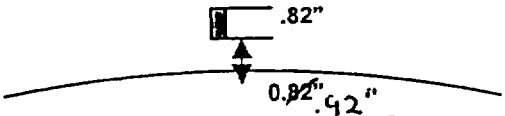

End View SPC 2/11/02

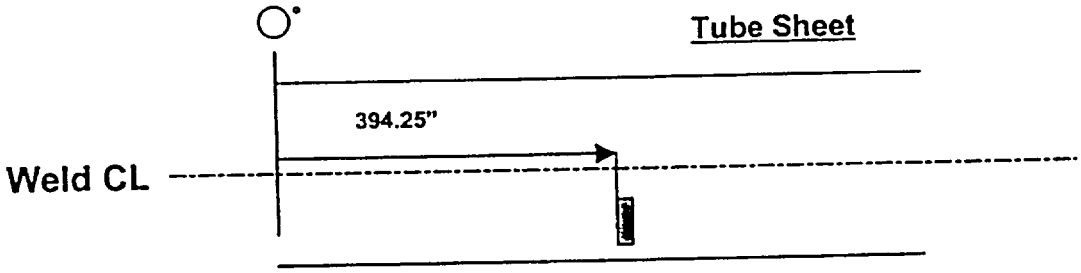

Top View

7) Calculations ☒ OK Reviewer JPW

Show determination of Surface or Subsurface
See attached sheets fo calculations.

Show determination of type of "a" to use
See attached sheets fo calculations.

8) ISI-FE-1 Paragraph ~~7.0~~ 6.1 SPC - "Rounding-off Method" was used ⊙ Yes Preparer SPC ☒ OK Reviewer JPW

9) Code Flaw Dimensions ☒ OK Reviewer JPW
"l" = 1.0" "a" = .40" "t *nominal*" = N/A "t *measured*" = 5.5 "s" = .90" "w" = N/A

10) Flaw Type ☒ OK Reviewer JPW Subsurface Planar (UT/RT)

11) Flaw Characterization Figure ☒ OK Reviewer JPW IWA-3320-1

12) Flaw Characterization Figure Number FLAW #2

13) Was IWA-3300 Flaw Characterization followed? ⊙ Yes ○ No If no, why?

14) The correct Code Edition and Addenda was available and used. ⊙ Yes Preparer SPC ☒ OK Reviewer JPW

15) Prepared by and date Sean P. Clay 2-11-02
The results are correct and the methodology used is in accordance with applicable codes, standards, specifications and procedures.

16) Review by and date Jay P. Wu 2-19-02
The review assures that the results are correct and the methodology used is in accordance with applicable codes, standards, specifications and procedures.

ISI Flaw Disposition Worksheet

NMC

Site/Unit: NMC1 PI2 | Procedure: ISI-UT-3 | Outage No.: PI2RF2002
Summary No.: 502618 | Procedure Revision/FC: 9 1 | Report No.: 2002U010
Workscope: ISI | Work Order No.: 0106946 | Page: ____ of ____

1) Flaw Number #12 | 3) ISI Interval 3rd | OK Reviewer DSW
2) Item Number B-B B2.40 | 4) Code Edition & Addenda 1989 No Addendum | OK Reviewer DSW
FLAW IS SUBSURFACE | 5) Acceptance Standard IWB-3510 | OK Reviewer DSW
$\ell = 1.0''$ $t = 5.5''$ | 6) Calculations (See Below) | OK Reviewer DSW
$a = .40''$ $S = .90''$

$a/\ell = \frac{.40''}{1.0''} = .40$ $a/t_{actual} \times 100\% = \frac{.40''}{5.50''} \times 100\% = 7.3\%$ $Y = S/a = \frac{.9''}{.40''} = 2.25$

$\therefore Y = 1$

$a/t_{allowed} = 5.8Y = 5.8$ per TABLE IWB 3510-1

$a/t\%_{allow} = 5.8\%$ $a/t\%_{actual} = 7.3\%$

FLAW IS UNACCEPTABLE PER TABLE IWB-3510-1. CONTINUE FLAW ANALYSIS PER WCAP 14166 - FLAW EVALUATION HANDBOOK.

7) Results OK Reviewer DSW
a/l = .40 Code allowable a/t% = 5.8% Calculated a/t% = 7.3% Laminar flaw surface area: (0.75 | w) = N/A
8) Table used for analysis OK Reviewer DSW IWB 3510-1
9) Was linear interpolation used? ○ Yes ☑ No If no, why?
ON TABLE
10) Was IWA-3200 Significant Digits For Limiting Values followed? ☑ Yes ○ No If no, why?

11) The correct Code Edition and Addenda was available and used. ☑ Yes Preparer KJR OK Reviewer DSW
12) Statement of acceptability or rejectability with basis. OK Reviewer DSW ☑ Accept ○ Reject
○ (a/t) Code allowable > (a/t) calculated
☑ OEM flaw evaluation handbook (see attached analysis)
☑ (a/t) Code allowable < (a/t) calculated

FLAW ACCEPTABLE by WCAP 14166 Sec A-2 page A2-7.

13) Prepared by and date [signature] 2-14-02
The results are correct and the methodology used is in accordance with applicable codes, standards, specifications and procedures.

14) Engineering review by and date [signature] 02-14-2002
This review assures that the results are correct and the methodology used is in accordance with applicable codes, standards, specifications and procedures.

15) Approved by and date [signature] 2/18/02
This approval assures that all involved with this flaw sizing and flaw disposition were aware of the necessity that the results and the methodology are correct and in accordance with applicable codes, standards, specifications and procedures.

Outage No PI2 RF2002
Summary No #502618
W.O.# 0106946
$\ell = 1.0''$ $t = 5.5''$
$a = .40''$ $S = .90''$

FLAW IS SUBSURFACE

$\delta = S + a = .90'' + .40'' = 1.30''$

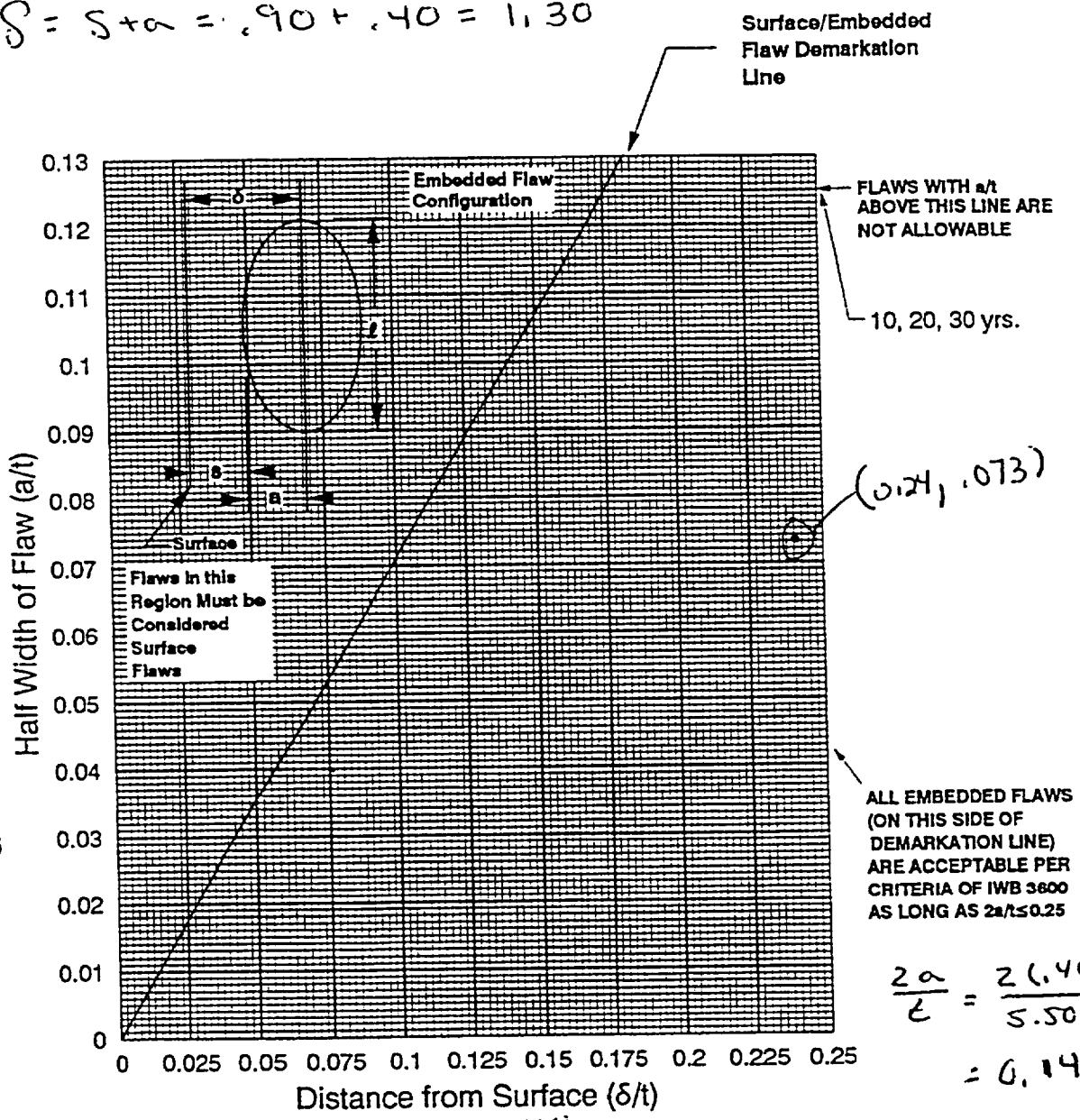

$a/t = \frac{.40''}{5.5''} = .073$

$\frac{2a}{t} = \frac{2(.40)}{5.50} = 0.14$

$\delta/t = \frac{1.30''}{5.50''} = \cancel{0.18}$ KLL 2-14-02 $= 0.24$

Figure A-2.4 Flaw Evaluation Chart for the Tubesheet-Channel Head Junction for Prairie Island Units 1 and 2

X	Inside Surface	___	Surface Flaw	X	Longitudinal Flaw
X	Outside Surface	X	Embedded Flaw	X	Circumferential Flaw

Prepared By: Ken Lobell 2-14-02
DSW

Flaw Sizing Calculations Using Metal Path for Vessel Welds > 2"

For surface and subsurface single planar flaws oriented in plane normal to pressure retaining surface

ASME SECT XI 1989 W/ NO ADDENDA SPC INITIAL TO VERIFY

ISI Report # 2002U010 Evaluation Performed By: S. Clay Date: 02/11/02
Flaw # #12 Reviewed By: J. Wren Date: 02/13/02

Length
Length of the flaw "ℓ" is determined by finding the difference between L1 and L2 for perpendicular scans, W1 and W2 for parallel scans.
L and W values are from page 2 of the UT report.
ℓ = 1.7" (L2) - 2.7" (L1) = - 1.0" inches.

Thickness
Thickness of the component at the location of the flaw, using UT or nom wall (circle one).
This value is from page 1 of the UT report.
"t" = 5.50 inches

Calibration
The measured angle in the calibration block was 46° degrees

Calculations using metal path From page ~~3~~ 5 of the UT report, Scan # 3
The flaw exhibited 20% DAC at 5.605 and 6.786 inches MP. Max amplitude is 5.903 inches MP with the transducer exit point at 2.5 inches from the centerline of the weld and 390.00 inches from the 0" reference. (Use of 20% DAC vs. 50% max amp for indications > 100% DAC is conservative.)

*) Determine correction factor due to curvature.
Radius = 67.94" (R). Surface distance to max amp point = 4.246" (C). C/R = .063 TAN.
INV TAN = 3.576 . COS = .998 . (R / COS) – R = .136" correction factor.

1) Determine the upper depth of the flaw from the exam surface.
5.605" (metal path at 20% upper) * COS of the measured angle 46° = 3.894" - .136" correction factor = 3.758 inches depth.

2) Determine the lower depth of the flaw from the exam surface.
6.786" (metal path at 20% lower) * COS of the measured angle 46° = 4.714" - .136" correction factor = 4.578 inches depth.

3) Determine the depth of the flaw from the exam surface at the maximum amplitude point.
5.903" (metal path at maximum amplitude point) * COS of the measured angle 46° = 4.101" - .136" correction factor = 3.965 inches depth.

4) Determine the distance from 0" reference to the maximum amplitude point of the flaw.
5.903" (metal path at maximum amplitude point) squared = 34.845 (a^2)
4.101" (depth at maximum amplitude point, before correction) squared = 16.818 (b^2)
$\sqrt{a^2 - b^2}$ = 4.246 inches of surface distance to the flaw from the transducer exit point.
390.00 (Lmax) + or – 4.246" (surf dist) = 394.246 inches from 0" reference.
(+ or – based on scan direction)

5) Determine S by picking the smaller of the following;
S = 3.758" (result of 1) = distance between exam surface and the upper flaw tip
>> OR <<
S = 5.50 (part "t") – 4.578 (result of 2) = 0.922" distance between the side opposite exam surface and the lower flaw tip

6) Determine 2d in though wall thickness.
4.578" (from step 2) – 3.758" (from step 1) = .820 inches.

Flaw Sizing Calculations Using Metal Path for Vessel Welds > 2"

For surface and subsurface single planar flaws oriented in plane normal to pressure retaining surface

Determination of surface or subsurface

0.4d = (2d / 2) * 0.4 = **.164"**

Compare to S (from step 5)

If S is less than 0.4d, the flaw is **surface.** a = 2d + S = **N/A** inches.

If S is greater than or equal to 0.4a the flaw is **sub-surface.** a = 2a / 2 = **.410** inches.

l = **1.0"** (for a/l > 0.5, l = 2a)

t = **5.5"** (part thickness)

a = **.40"** (surf or sub surf, circle one)

S_1 = **.90"**

58 121

ISI Flaw Sizing Worksheet

Site/Unit:	NMC / PI2	Procedure:	ISI-UT-3	Outage No.:	PI2RF2002
Summary No.:	502618	Procedure Revision/FC:	9 / ---	Report No.:	2002U010
Workscope:	ISI	Work Order No :	0106946	Page:	___ of ___

1) Flaw Number #13 45°
2) Item Number B2.40
3) ISI Interval 3rd Interval — OK Reviewer
4) Code Edition & Addenda 89 no addenda — OK Reviewer
5) Method UT
6) Flaw Sketch (See Below) — OK Reviewer

Flaw View

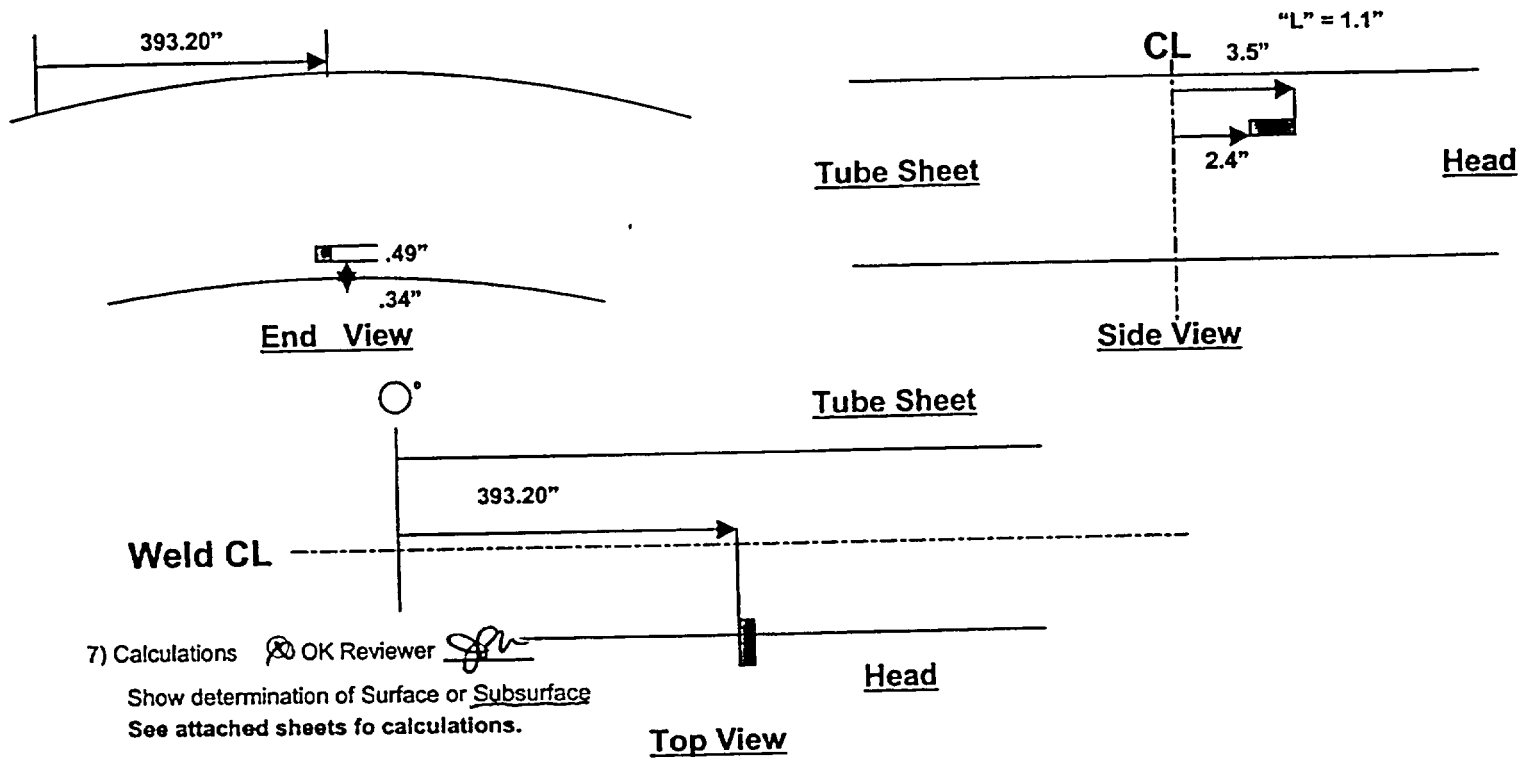

7) Calculations OK Reviewer

Show determination of Surface or Subsurface
See attached sheets fo calculations.

Show determination of type of "a" to use
See attached sheets fo calculations.

8) ISI-FE-1 Paragraph 6.1 SPC - "Rounding-off Method" was used ⊙ Yes Preparer SPC OK Reviewer
9) Code Flaw Dimensions OK Reviewer
"l" = 1.1" "a" = .25" "t *nominal*" = N/A "t *measured*" = 5.5 "s" = .35" "w" = N/A
10) Flaw Type OK Reviewer Subsurface Planar (UT/RT)
11) Flaw Characterization Figure OK Reviewer IWA-3320-1
12) Flaw Characterization Figure Number FLAW #2
13) Was IWA-3300 Flaw Characterization followed? ⊙ Yes ○ No If no, why?

14) The correct Code Edition and Addenda was available and used. ⊙ Yes Preparer SPC OK Reviewer

15) Prepared by and date Sean P. Clay 2-11-02
The results are correct and the methodology used is in accordance with applicable codes, standards, specifications and procedures.

16) Review by and date 2-14-02
The review assures that the results are correct and the methodology used is in accordance with applicable codes, standards, specifications and procedures.

REPORT# _____

ISI Flaw Disposition Worksheet

Site/Unit: NMC 1 PI 2 | Procedure: ISI-UT-3 | Outage No.: PI2RF2002

Summary No.: 50261B | Procedure Revision/FC: 9 1 | Report No.: 20024010

Workscope: ISI | Work Order No.: 01069946 | Page: ____ of ____

1) Flaw Number #13 | 3) ISI Interval 3rd. | ☑ OK Reviewer KJ2

2) Item Number B-B B2.40 | 4) Code Edition & Addenda 1989 No Addendas | ☑ OK Reviewer KJ2

5) Acceptance Standard IWB-3510 | ☑ OK Reviewer KJ2

6) Calculations (See Below) | ☑ OK Reviewer KJ2

FLAW is subsurface.

$\ell = 1.1''$ $t = 5.5$

$a = .25''$ $S = .35$

$a/\ell = \frac{.25''}{1.1''} = .23$

$a/t\% = \frac{.25''}{5.5''} \times 100 = 4.55\%$

$y = S/a = \frac{.35}{.25} = 1.4$

$\therefore y = 1$

$a/t\%_{allow} = 3.3$ @ .20

$a/t\%_{allow} = 3.8\%$ @ .25

$a/t\%_{allow} = \frac{3.8-3.3}{(.25-.20)}(.23-.20) + 3.3 = 3.6\%$ @ .23

$a/t\%_{actual} = 4.55\%$ $a/t\%_{allow} = 3.6$ @ .23

FLAW is NOT acceptable IAW TABLE IWB-3510-1, continue analysis using WCAP-14166.

7) Results ☑ OK Reviewer KJ2

a/l = .23 Code allowable a/t% = 3.6 Calculated a/t% = 4.55 Laminar flaw surface area: (0.75 | w) = NA

8) Table used for analysis ☑ OK Reviewer KJ2 IWB-3510-1

9) Was linear interpolation used? ● Yes ○ No If no, why?

10) Was IWA-3200 Significant Digits For Limiting Values followed? ● Yes ○ No If no, why?

11) The correct Code Edition and Addenda was available and used. ● Yes Preparer DSW ☑ OK Reviewer KJ2

12) Statement of acceptability or rejectability with basis. ☑ OK Reviewer KJ2 ● Accept ○ Reject

- ○ (a/t) Code allowable > (a/t) calculated
- ● OEM flaw evaluation handbook (see attached analysis)
- ● (a/t) Code allowable < (a/t) calculated

FLAW #13 is acceptable IAW WCAP-14166 Section A2 page A2-7

13) Prepared by and date Daniel S. Wheeler 2-14-2002

The results are correct and the methodology used is in accordance with applicable codes, standards, specifications and procedures.

14) Engineering review by and date [signature] 2-14-02

This review assures that the results are correct and the methodology used is in accordance with applicable codes, standards, specifications and procedures.

15) Approved by and date Thomas Vik 2/14/02

This approval assures that all involved with this flaw sizing and flaw disposition were aware of the necessity that the results and the methodology are correct and in accordance with applicable codes, standards, specifications and procedures.

OUTAGE PI2RF2002
Summary # 502618
W.O. # 0106946
Report # 20024010
$a = .25''$ $t = 5.5$
$\ell = 1.1''$ $S = .35$

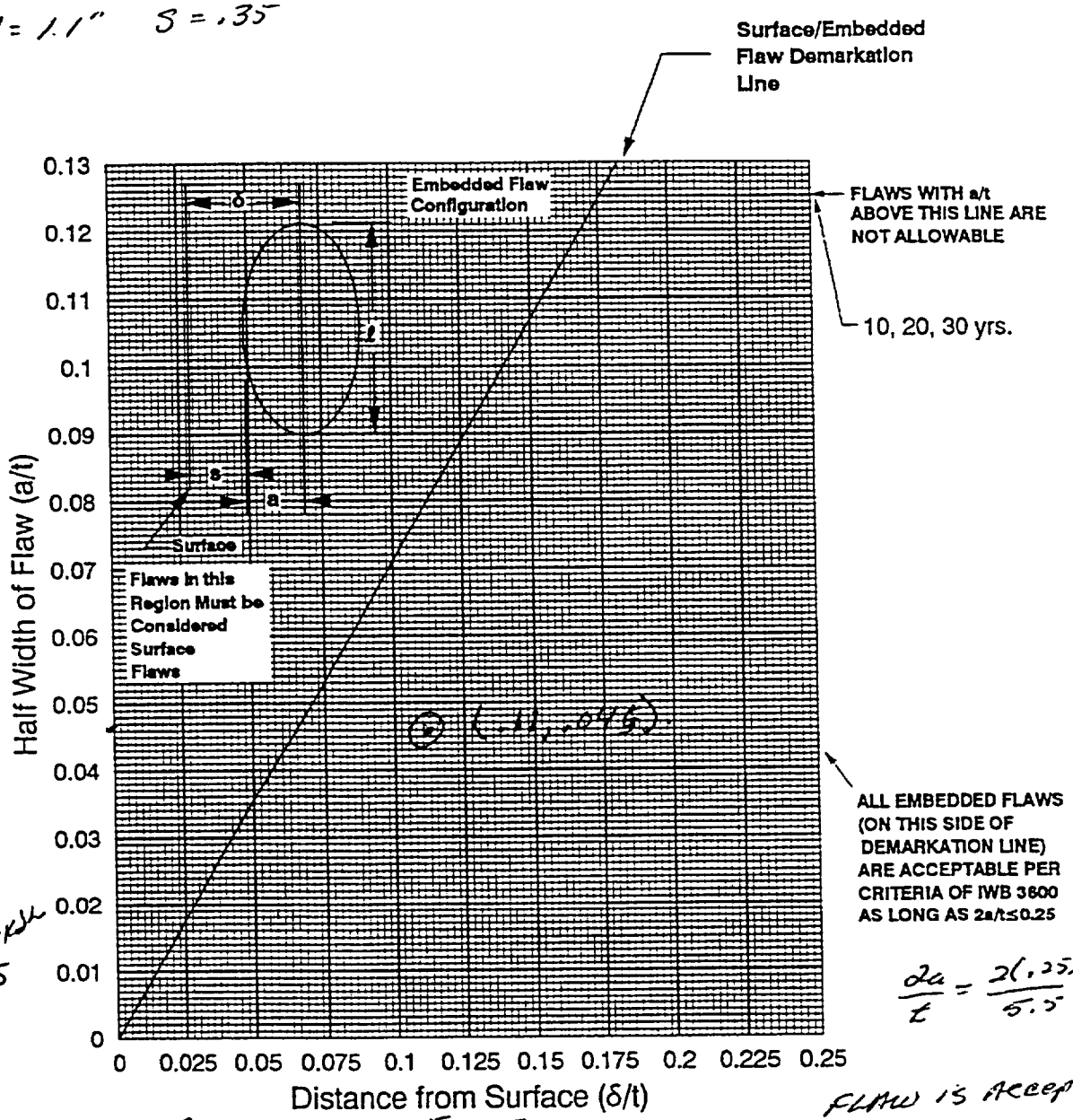

$a/t = \frac{.25''}{5.5''} = .045$

$\frac{2a}{t} = \frac{2(.25)}{5.5} = .09$

FLAW IS ACCEPTABLE

$\frac{\delta}{t} = \frac{S+a}{t} = \frac{.35+.25}{5.5} = \frac{.60}{5.5} = .11$

Prepared by D. Sullivan 2/14/2002

Figure A-2.4 Flaw Evaluation Chart for the Tubesheet-Channel Head Junction for Prairie Island Units 1 and 2

X	Inside Surface	___	Surface Flaw	X	Longitudinal Flaw
X	Outside Surface	X	Embedded Flaw	X	Circumferential Flaw

Flaw Sizing Calculations Using Metal Path for Vessel Welds > 2"

For surface and subsurface single planar flaws oriented in plane normal to pressure retaining surface

ASME SECT XI 1989 W/ NO ADDENDA SPC INITIAL TO VERIFY

ISI Report # 2002U010 Evaluation Performed By: S. Clay Date: 02/11/02
Flaw # #13 Reviewed By: J. Wren Date: 02/13/02

Length

Length of the flaw "*l*" is determined by finding the difference between L1 and L2 for perpendicular scans, W1 and W2 for parallel scans.
L and W values are from page 2 of the UT report.
l = 2.4" (L2) - 3.5" (L1) = - 1.1" inches.

Thickness

Thickness of the component at the location of the flaw, using UT or nom wall (circle one).
This value is from page 1 of the UT report.
"t" = 5.50 inches

Calibration

The measured angle in the calibration block was 46° degrees

Calculations using metal path From page ~~3~~ 5 of the UT report, Scan # 3
The flaw exhibited 20% DAC at 7.023 and 7.725 inches MP. Max amplitude is 7.222 inches MP with the transducer exit point at 2.5 inches from the centerline of the weld and 388.00 inches from the 0" reference. (Use of 20% DAC vs. 50% max amp for indications > 100% DAC is conservative.)

*) Determine correction factor due to curvature.
Radius = 67.94" (R). Surface distance to max amp point = 5.195" (C). C/R = .076 TAN.
INV TAN = 4.373 . COS = .997 . (R / COS) – R = .204" correction factor.

1) Determine the upper depth of the flaw from the exam surface.
7.023" (metal path at 20% upper) * COS of the measured angle 46° = 4.879" - .204" correction factor = 4.675 inches depth.

2) Determine the lower depth of the flaw from the exam surface.
7.725" (metal path at 20% lower) * COS of the measured angle 46° = 5.366" - .204" correction factor = 5.162 inches depth.

3) Determine the depth of the flaw from the exam surface at the maximum amplitude point.
7.222" (metal path at maximum amplitude point) * COS of the measured angle 46° = 5.017" - .204" correction factor = 4.813 inches depth.

4) Determine the distance from 0" reference to the maximum amplitude point of the flaw.
7.222" (metal path at maximum amplitude point) squared = 52.157 (a^2)
5.107" (depth at maximum amplitude point, before correction) squared = 25.170 (b^2)
$\sqrt{a^2 - b^2}$ = 5.195 inches of surface distance to the flaw from the transducer exit point.
388.00 (Lmax) + or – 5.195" (surf dist) = 393.195 inches from 0" reference.
(+ or – based on scan direction)

5) Determine S by picking the smaller of the following;
S = 4.675" (result of 1) = distance between exam surface and the upper flaw tip
>> OR <<
S = 5.50 (part "t") – 5.162 (result of 2) = 0.338" distance between the side opposite exam surface and the lower flaw tip

6) Determine 2d in though wall thickness.
5.162" (from step 2) – 4.675" (from step 1) = .487 inches.

RECORD# _____

Flaw Sizing Calculations Using Metal Path for Vessel Welds > 2"

For surface and subsurface single planar flaws oriented in plane normal to pressure retaining surface

Determination of surface or subsurface

0.4d = (2d / 2) * 0.4 = **.097"**

Compare to S (from step 5)

If S is less than 0.4d, the flaw is **surface.** a = 2d + S = **N/A** inches.

If S is greater than or equal to 0.4a the flaw is **sub-surface.** a = 2a / 2 = **.244** inches.

l = **1.1"** (for a/*l* > 0.5, *l* = 2a) t = **5.5"** (part thickness)

a = **.25"** (surf or sub surf, circle one) S = **.35"**

63 121

REPORT # _____

ISI Flaw Sizing Worksheet

Site/Unit:	NMC / PI2	Procedure:	ISI-UT-3	Outage No.:	PI2RF2002
Summary No.:	502618	Procedure Revision/FC:	9 / ---	Report No.:	2002U010
Workscope:	ISI	Work Order No.:	0106946	Page:	___ of ___

1) Flaw Number: 60° #1
2) Item Number: B2.40
3) ISI Interval: 3rd Interval — OK Reviewer JPW
4) Code Edition & Addenda: 89 no addenda — OK Reviewer JPW
5) Method: UT
6) Flaw Sketch (See Below) — OK Reviewer JPW

Flaw View

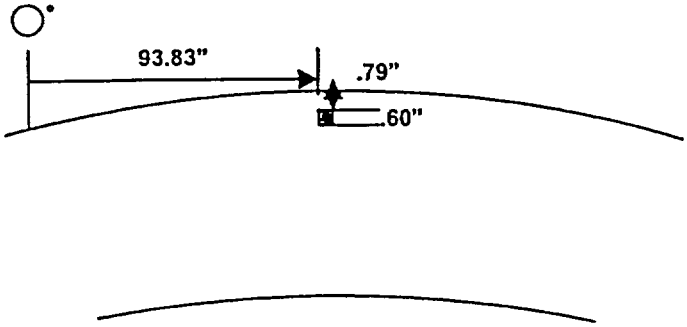

End View

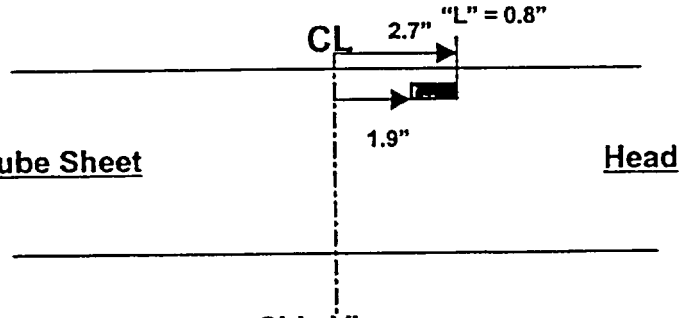

Side View

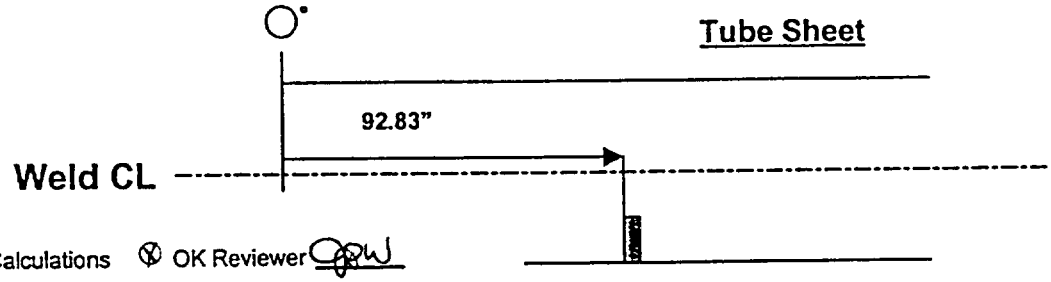

Top View

7) Calculations — OK Reviewer JPW

Show determination of Surface or Subsurface
See attached sheets fo calculations.

Show determination of type of "a" to use
See attached sheets fo calculations.

8) ISI-FE-1 Paragraph ~~7.0~~ 6.1 SPC "Rounding-off Method" was used — Yes — Preparer SPC — OK Reviewer JPW

9) Code Flaw Dimensions — OK Reviewer JPW

"l" = .80" "a" = .30" "t *nominal*" = N/A "t *measured*" = 5 5 "s" = .80" "w" = N/A

10) Flaw Type — OK Reviewer JPW — Subsurface Planar (UT/RT)

11) Flaw Characterization Figure — OK Reviewer JPW — IWA-3320-1

12) Flaw Characterization Figure Number: FLAW # 1

13) Was IWA-3300 Flaw Characterization followed? — Yes — No — If no, why?

14) The correct Code Edition and Addenda was available and used. — Yes — Preparer SPC — OK Reviewer JPW

15) Prepared by and date: Sean P. Clay 2-11-02

The results are correct and the methodology used is in accordance with applicable codes, standards, specifications and procedures.

16) Review by and date: 2-19-02

The review assures that the results are correct and the methodology used is in accordance with applicable codes, standards, specifications and procedures.

NMC

ISI Flaw Disposition Worksheet

Site/Unit: NMC 1 PI2 | Procedure: ISI-UT-3 | Outage No.: PI2RF2002
Summary No.: 502618 | Procedure Revision/FC: 9 1 | Report No.: 20020010
Workscope: ISI | Work Order No.: 0166946 | Page: ____ of ____

1) Flaw Number 60° #1 | 3) ISI Interval 3rd. | OK Reviewer KSL
2) Item Number B-B B2.40 | 4) Code Edition & Addenda 1989 No Addenda | OK Reviewer KSL
FLAW is subsurface | 5) Acceptance Standard IWB-3510 | OK Reviewer KSL
6) Calculations (See Below) | OK Reviewer KSL

$l = .80''$ · $t = 5.5''$
$a = .30''$ $S = .80''$

$a/t_{actual} \times 100\% = \frac{.30''}{5.50''} \times 100 = 5.5\%$

$Y = S/a = \frac{.80}{.30} = 2.6$

$a/l = \frac{.30''}{.80''} = .38$

FROM TABLE 3510-1

$\therefore Y = 1$

$a/t\%_{allowed} @ .35 = 5.1\%$ $a/t\%_{allow} @ .40 = 5.8\%$

$a/t_{allowed} @ .38 = \frac{5.8-5.1}{.40-.35}(.38-.35) + 5.1 = \frac{.7}{.05}(.03) + 5.1 = 5.52$

$a/t_{allowed} @ .38 = 5.5$ $a/t\%_{actual} = a/t\%_{allowed}$

FLAW is acceptable by IWB-3510 Table 3510-1

7) Results ☺ OK Reviewer KSL
a/l = .38 Code allowable a/t% = 5.5 Calculated a/t% = 5.5 Laminar flaw surface area: (0.75 | w) = NA
8) Table used for analysis ● OK Reviewer KSL IWB 3510-1
9) Was linear interpolation used? ● Yes ○ No If no, why?

10) Was IWA-3200 Significant Digits For Limiting Values followed? ● Yes ○ No If no, why?

11) The correct Code Edition and Addenda was available and used. ● Yes Preparer [illegible] ● OK Reviewer KSL
12) Statement of acceptability or rejectability with basis. ● OK Reviewer KSL ● Accept ○ Reject
- ● (a/t) Code allowable ≥ (a/t) calculated
- ○ OEM flaw evaluation handbook (see attached analysis)
- ○ (a/t) Code allowable < (a/t) calculated

13) Prepared by and date [signature] 2-14-2002
The results are correct and the methodology used is in accordance with applicable codes, standards, specifications and procedures.

14) Engineering review by and date [signature] 2-14-02
This review assures that the results are correct and the methodology used is in accordance with applicable codes, standards, specifications and procedures.

15) Approved by and date [signature] 2/16/02
This approval assures that all involved with this flaw sizing and flaw disposition were aware of the necessity that the results and the methodology are correct and in accordance with applicable codes, standards, specifications and procedures.

Flaw Sizing Calculations Using Metal Path for Vessel Welds > 2"

For surface and subsurface single planar flaws oriented in plane normal to pressure retaining surface

ASME SECT XI 1989 W/ NO ADDENDA SPC INITIAL TO VERIFY

ISI Report # 2002U010 Evaluation Performed By: S. Clay Date: 02/11/02
Flaw # 60°#1 Reviewed By: J. Wren Date: 02/14/02

Length
Length of the flaw "ℓ" is determined by finding the difference between L1 and L2 for perpendicular scans, W1 and W2 for parallel scans.
L and W values are from page 5 of the UT report.
ℓ = 1.9" (L2) - 2.7" (L1) = - 0.8" inches.

Thickness
Thickness of the component at the location of the flaw, using UT or nom wall (circle one).
This value is from page 1 of the UT report.
"t" = 5.50 inches

Calibration
The measured angle in the calibration block was 63° degrees

Calculations using metal path From page 5 of the UT report, Scan # 4
The flaw exhibited 20% DAC at 1.750 and 3.080 inches MP. Max amplitude is 2.160 inches MP with the transducer exit point at 2.2 inches from the centerline of the weld and 95.75 inches from the 0" reference. (Use of 20% DAC vs. 50% max amp for indications > 100% DAC is conservative.)

*) Determine correction factor due to curvature.
Radius = 67.94" (R). Surface distance to max amp point = 1.925" (C). C/R = .028 TAN.
INV TAN = 1.623 . COS = 1.000 . (R / COS) – R = .000" correction factor.

1) Determine the upper depth of the flaw from the exam surface.
1.750" (metal path at 20% upper) * COS of the measured angle 63° = .794" - .000" correction factor = .794 inches depth.

2) Determine the lower depth of the flaw from the exam surface.
3.080" (metal path at 20% lower) * COS of the measured angle 63° = 1.398" - .000" correction factor = 1.398 inches depth.

3) Determine the depth of the flaw from the exam surface at the maximum amplitude point.
2.160" (metal path at maximum amplitude point) * COS of the measured angle 63° = .981" - .000" correction factor = .981 inches depth.

4) Determine the distance from 0" reference to the maximum amplitude point of the flaw.
2.160" (metal path at maximum amplitude point) squared = 4.666 (a^2)
.981" (depth at maximum amplitude point, before correction) squared = .962 (b^2)
$\sqrt{a^2 - b^2}$ = 1.924 inches of surface distance to the flaw from the transducer exit point.
95.75 (Lmax) + or – 1.924" (surf dist) = 93.826 inches from 0" reference.
(+ or – based on scan direction)

5) Determine S by picking the smaller of the following;
S = .794" (result of 1) = distance between exam surface and the upper flaw tip
>> OR <<
S = 5.50 (part "t") – 1.398 (result of 2) = 4.102" distance between the side opposite exam surface and the lower flaw tip

6) Determine 2d in though wall thickness.
1.398" (from step 2) – .794" (from step 1) = .604 inches.

66 = 121

Flaw Sizing Calculations Using Metal Path for Vessel Welds > 2"

For surface and subsurface single planar flaws oriented in plane normal to pressure retaining surface

Determination of surface or subsurface

0.4d = (2d / 2) * 0.4 = **.121"**

Compare to S (from step 5)

If S is less than 0.4d, the flaw is **surface.** a = 2d + S = **N/A** inches.

If S is greater than or equal to 0.4a the flaw is **sub-surface.** a = 2a / 2 = **.302** inches.

l = **.80"** (for a/*l* > 0.5, *l* = 2a) t = **5.5"** (part thickness)

a = **.30"** (surf or sub surf, circle one) S = **.80"**

67 121

ISI Flaw Sizing Worksheet

Site/Unit:	NMC / PI2	Procedure:	ISI-UT-3	Outage No.:	PI2RF2002
Summary No.:	502618	Procedure Revision/FC:	9 / ---	Report No.:	2002U010
Workscope:	ISI	Work Order No.:	0106946	Page:	of

1) Flaw Number #2 60°
2) Item Number B2.40
3) ISI Interval 3rd Interval ☒ OK Reviewer
4) Code Edition & Addenda 89 no addenda ☒ OK Reviewer
5) Method UT
6) Flaw Sketch (See Below) ☒ OK Reviewer

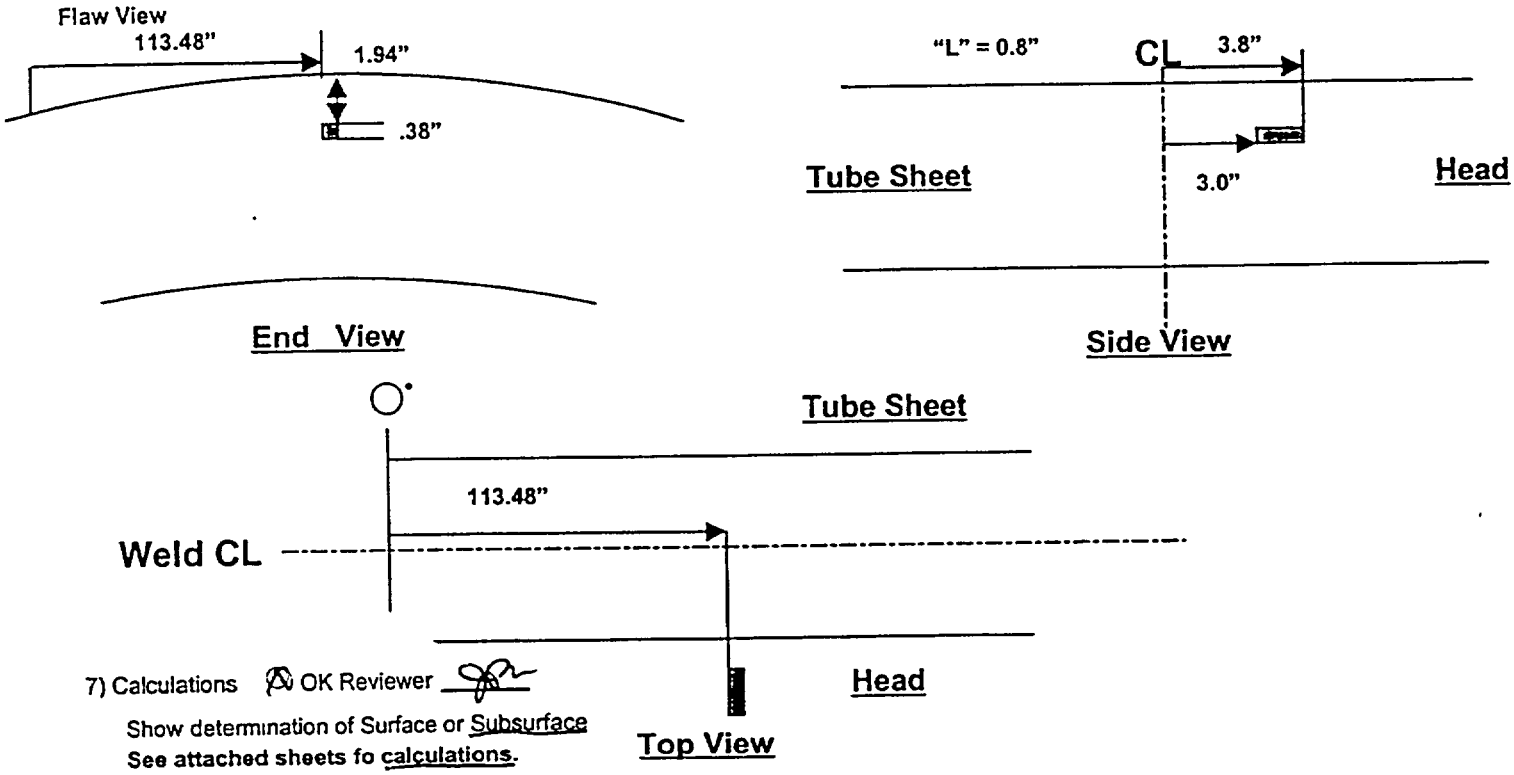

7) Calculations ☒ OK Reviewer

Show determination of Surface or Subsurface
See attached sheets fo calculations.

Show determination of type of "a" to use
See attached sheets fo calculations.

8) ISI-FE-1 Paragraph ~~7.0~~ 6.1 SPC - "Rounding-off Method" was used ◉ Yes Preparer SPC ☒ OK Reviewer

9) Code Flaw Dimensions ☒ OK Reviewer

"l" = .80" "a" = .20" "t *nominal*" = N/A "t *measured*" = 5.5 "s" = 1.9" "w" = N/A

10) Flaw Type ☒ OK Reviewer Subsurface Planar (UT/RT)

11) Flaw Characterization Figure ☒ OK Reviewer IWA-3320-1

12) Flaw Characterization Figure Number FLAW #1

13) Was IWA-3300 Flaw Characterization followed? ◉ Yes ○ No If no, why?

14) The correct Code Edition and Addenda was available and used. ◉ Yes Preparer SPC ☒ OK Reviewer

15) Prepared by and date
SEAN P. CLAY 2-12-02
The results are correct and the methodology used is in accordance with applicable codes, standards, specifications and procedures.

16) Review by and date 2-19-02
The review assures that the results are correct and the methodology used is in accordance with applicable codes, standards, specifications and procedures.

REPORT# _____

ISI Flaw Disposition Worksheet

NMC

Site/Unit: NMC PI2 | Procedure: ISI-UT-3 | Outage No.: P12RF2002
Summary No.: 502618 | Procedure Revision/FC: 9 1 | Report No.: 20024010
Workscope: ISI | Work Order No.: 01069946 | Page: ____ of ____

1) Flaw Number 60° #2 | 3) ISI Interval 3rd | OK Reviewer DSW
2) Item Number B-B B2.40 | 4) Code Edition & Addenda 1989 No Addenda | OK Reviewer DSW
FLAW IS SUBSURFACE | 5) Acceptance Standard IWB-3510 | OK Reviewer DSW
6) Calculations (See Below) | OK Reviewer DSW

$a = .20''$ $t = 5.5''$
$\ell = .80''$ $S = 1.9''$

$a/\ell = \frac{.20''}{.80''} = .25$

$a/t_{actual} \times 100\% = \frac{.20''}{5.5''} \times 100\% = 3.63\%$

$Y = S/a = \frac{1.9''}{.20''} = 9.5$
$\therefore Y = 1$

FROM TABLE IWB-3510-1 $a/t\%_{allowable} = 3.8Y = 3.8\%$

7) Results OK Reviewer DSW
a/l = .25 Code allowable a/t% = 3.8% Calculated a/t% = 3.63% Laminar flaw surface area: (0.75 | w) = N/A
8) Table used for analysis ○ OK Reviewer ____ TABLE IWB-3510-10
9) Was linear interpolation used? ○ Yes ● No If no, why?
ON TABLE
10) Was IWA-3200 Significant Digits For Limiting Values followed? ● Yes ○ No If no, why?

11) The correct Code Edition and Addenda was available and used. ● Yes Preparer KSK ● OK Reviewer DSW
12) Statement of acceptability or rejectability with basis. ● OK Reviewer DSW ● Accept ○ Reject
- ● (a/t) Code allowable > (a/t) calculated
- ○ OEM flaw evaluation handbook (see attached analysis)
- ○ (a/t) Code allowable < (a/t) calculated

13) Prepared by and date [signature] 2-14-02
The results are correct and the methodology used is in accordance with applicable codes, standards, specifications and procedures.

14) Engineering review by and date [signature] 2-14-2002
This review assures that the results are correct and the methodology used is in accordance with applicable codes, standards, specifications and procedures.

15) Approved by and date [signature] 2/18/02
This approval assures that all involved with this flaw sizing and flaw disposition were aware of the necessity that the results and the methodology are correct and in accordance with applicable codes, standards, specifications and procedures.

Flaw Sizing Calculations Using Metal Path for Vessel Welds > 2"

For surface and subsurface single planar flaws oriented in plane normal to pressure retaining surface

ASME SECT XI 1989 W/ NO ADDENDA SPC INITIAL TO VERIFY

ISI Report # 2002U010 Evaluation Performed By: S. Clay Date: 02/12/02
Flaw # 60°#2 Reviewed By: J. Wren Date: 02/12/02

Length
Length of the flaw "l" is determined by finding the difference between L1 and L2 for perpendicular scans, W1 and W2 for parallel scans.
L and W values are from page 5 of the UT report.
l = 3.0" (L2) - 3.8" (L1) = - 0.8" inches.

Thickness
Thickness of the component at the location of the flaw, using UT or nom wall (circle one).
This value is from page 1 of the UT report.
"t" = 5.50 inches

Calibration
The measured angle in the calibration block was 63° degrees

Calculations using metal path From page 5 of the UT report, Scan # 4
The flaw exhibited 20% DAC at 4.580 and 5.410 inches MP. Max amplitude is 5.070 inches MP with the transducer exit point at 3.3 inches from the centerline of the weld and 118.00 inches from the 0" reference. (Use of 20% DAC vs. 50% max amp for indications > 100% DAC is conservative.)

*) Determine correction factor due to curvature.
Radius = 67.94" (R). Surface distance to max amp point = 4.517" (C). C/R = .066 TAN.
INV TAN = 3.804 . COS = .998 . (R / COS) – R = .136" correction factor.

1) Determine the upper depth of the flaw from the exam surface.
4.580" (metal path at 20% upper) * COS of the measured angle 63° = 2.079" - .136" correction factor = 1.943 inches depth.

2) Determine the lower depth of the flaw from the exam surface.
5.410" (metal path at 20% lower) * COS of the measured angle 63° = 2.456" - .136" correction factor = 2.320 inches depth.

3) Determine the depth of the flaw from the exam surface at the maximum amplitude point.
5.070" (metal path at maximum amplitude point) * COS of the measured angle 63° = 2.302" - .136" correction factor = 2.166 inches depth.

4) Determine the distance from 0" reference to the maximum amplitude point of the flaw.
5.070" (metal path at maximum amplitude point) squared = 25.705 (a^2)
2.302" (depth at maximum amplitude point, before correction) squared = 5.299 (b^2)
$\sqrt{a^2 - b^2}$ = 4.517 inches of surface distance to the flaw from the transducer exit point.
118.00 (Lmax) + or – 4.517" (surf dist) = 113.483 inches from 0" reference.
(+ or – based on scan direction)

5) Determine S by picking the smaller of the following;
S = 1.943" (result of 1) = distance between exam surface and the upper flaw tip
>> OR <<
S = 5.50 (part "t") – 2.320 (result of 2) = 3.180" distance between the side opposite exam surface and the lower flaw tip

6) Determine 2d in though wall thickness.
2.320" (from step 2) – 1.943" (from step 1) = .377 inches.

Flaw Sizing Calculations Using Metal Path for Vessel Welds > 2"

For surface and subsurface single planar flaws oriented in plane normal to pressure retaining surface

Determination of surface or subsurface

0.4d = (2d / 2) * 0.4 = .076"

Compare to S (from step 5)

If S is less than 0.4d, the flaw is **surface**. a = 2d + S = N/A inches.

If S is greater than or equal to 0.4a the flaw is **sub-surface**. a = 2a / 2 = .189 inches.

ℓ = .80" (for a/ℓ > 0.5, ℓ = 2a)

t = 5.5" (part thickness)

a = .20" (surf or sub surf, circle one)

S = 1.9"

71 121

NMC

ISI Flaw Sizing Worksheet

Site/Unit:	NMC / PI2	Procedure:	ISI-UT-3	Outage No.:	PI2RF2002
Summary No.:	502618	Procedure Revision/FC:	9 / —	Report No.:	2002U010
Workscope:	ISI	Work Order No.:	0106946	Page:	___ of ___

1) Flaw Number #3 60°
2) Item Number B2.40
3) ISI Interval 3rd Interval ☒ OK Reviewer JPW
4) Code Edition & Addenda 89 no addenda ☒ OK Reviewer JPW
5) Method UT
6) Flaw Sketch (See Below) ☒ OK Reviewer JPW

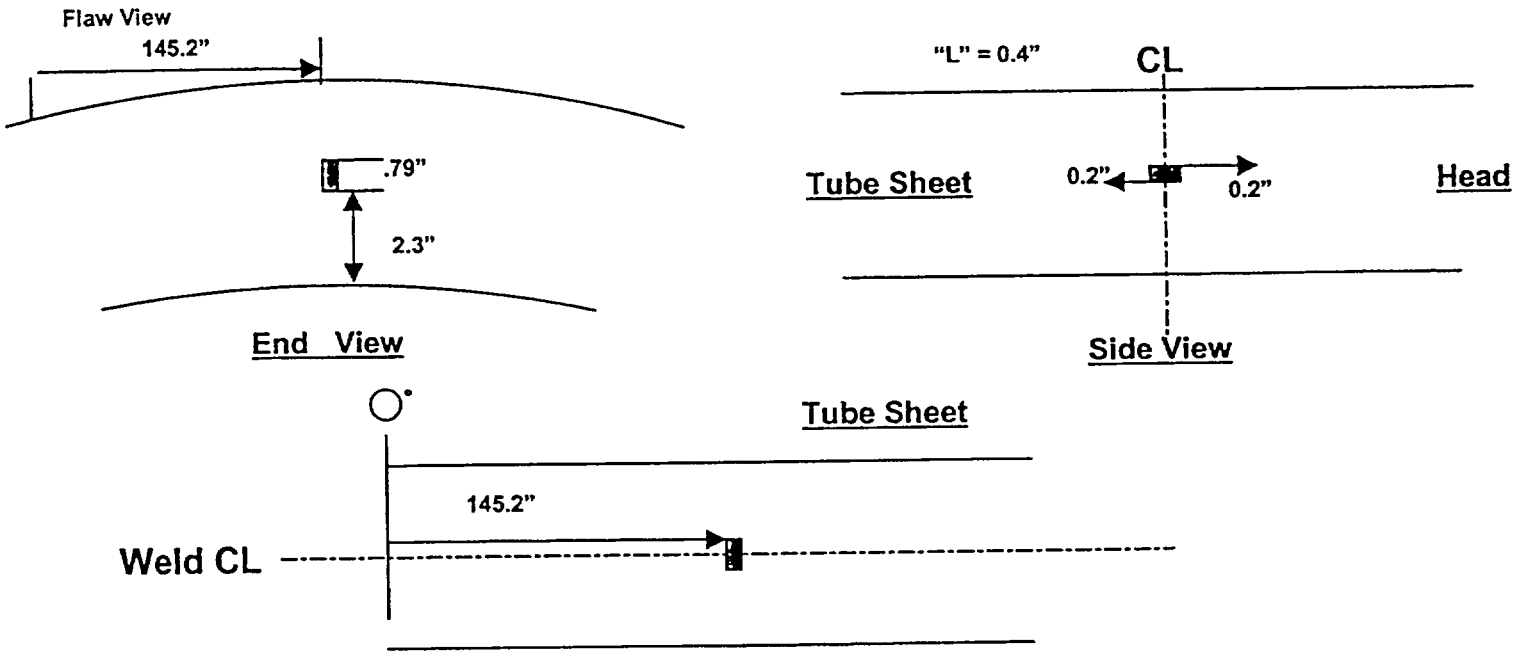

7) Calculations ☒ OK Reviewer JPW

Show determination of Surface or Subsurface
See attached sheets fo calculations.

Show determination of type of "a" to use
See attached sheets fo calculations.

8) ISI-FE-1 Paragraph ~~7.0~~ 6.1 SPC - "Rounding-off Method" was used ⊙ Yes Preparer SPC ☒ OK Reviewer JPW

9) Code Flaw Dimensions ☒ OK Reviewer JPW
"l" = .80" "a" = .40" "t *nominal*" = N/A "t *measured*" = 5.5 "s" = 2.3" "w" = N/A

10) Flaw Type ☒ OK Reviewer JPW Subsurface Planar (UT/RT)

11) Flaw Characterization Figure ☒ OK Reviewer JPW IWA-3320-1

12) Flaw Charactenzation Figure Number FLAW # 2

13) Was IWA-3300 Flaw Charactenzation followed? ⊙ Yes ○ No If no, why?

14) The correct Code Edition and Addenda was available and used. ⊙ Yes Preparer SPC ☒ OK Reviewer JPW

15) Prepared by and date SEAN P. CLAY 2-12-02

The results are correct and the methodology used is in accordance with applicable codes, standards, specifications and procedures.

16) Review by and date 2-19-02

The review assures that the results are correct and the methodology used is in accordance with applicable codes, standards, specifications and procedures.

ISI Flaw Disposition Worksheet

Site/Unit: ~~PI2~~ NMC / PI 2 | Procedure: ISI-UT-3 | Outage No: PI2RF2002
Summary No.: 502618 | Procedure Revision/FC: 9 1 | Report No: 20026010
Workscope: ISI | Work Order No.: 01069416 | Page: ____ of ____

1) Flaw Number 60° #3
2) Item Number B-B 82.40
3) ISI Interval 3rd.
4) Code Edition & Addenda 1989 No Addenda
5) Acceptance Standard IWB-3510
6) Calculations (See Below)

✓ OK Reviewer KSL
✓ OK Reviewer KSL
✓ OK Reviewer KSL
✓ OK Reviewer KSL

FLAW is SUBSURFACE.

$a = .40''$ $t = 5.5''$

$l = .80''$ $S = 2.3''$

$a/l = \frac{.40''}{.80''} = .50$

$a/t_{act} \times 100\% = \frac{.40}{5.50} \times 100 = 7.3\%$

$a/t_{allow} = 7.6\%$ @ .50 Table IWB 3510-1

$Y = S/a = \frac{2.3}{.4} = 5.75$

$\therefore Y = 1$

7) Results ◉ OK Reviewer KSL
a/l = .50 Code allowable a/t% = 7.6 Calculated a/t% = 7.3 Laminar flaw surface area: (0.75 | w) = NA
8) Table used for analysis ◉ OK Reviewer KSL IWB-3510-1
9) Was linear interpolation used? ○ Yes ◉ No If no, why?
ON TABLE
10) Was IWA-3200 Significant Digits For Limiting Values followed? ◉ Yes ○ No If no, why?

11) The correct Code Edition and Addenda was available and used. ◉ Yes Preparer DSW ◉ OK Reviewer KSL
12) Statement of acceptability or rejectability with basis. ◉ OK Reviewer KSL ◉ Accept ○ Reject
- ◉ (a/t) Code allowable > (a/t) calculated
- ○ OEM flaw evaluation handbook (see attached analysis)
- ○ (a/t) Code allowable < (a/t) calculated

13) Prepared by and date Daniel A. Whitford 2-14-2002.
The results are correct and the methodology used is in accordance with applicable codes, standards, specifications and procedures.

14) Engineering review by and date KS Rudolph 2-14-02
This review assures that the results are correct and the methodology used is in accordance with applicable codes, standards, specifications and procedures.

15) Approved by and date Monica Vile 2/18/02
This approval assures that all involved with this flaw sizing and flaw disposition were aware of the necessity that the results and the methodology are correct and in accordance with applicable codes, standards, specifications and procedures.

Flaw Sizing Calculations Using Metal Path for Vessel Welds > 2"

For surface and subsurface single planar flaws oriented in plane normal to pressure retaining surface

ASME SECT XI 1989 W/ NO ADDENDA SPC INITIAL TO VERIFY

ISI Report # 2002U010 Evaluation Performed By: S. Clay Date: 02/12/02
Flaw # 60°#3 Reviewed By: J. Wren Date: 2-13-02

Length
Length of the flaw "ℓ" is determined by finding the difference between L1 and L2 for perpendicular scans, W1 and W2 for parallel scans.
L and W values are from page 5 of the UT report.
ℓ = - 0.2" (L2) - + 0.2" (L1) = - 0.4" inches.

Thickness
Thickness of the component at the location of the flaw, using UT or nom wall (circle one).
This value is from page 1 of the UT report.
"t" = 5.50 inches

Calibration
The measured angle in the calibration block was 63° degrees

Calculations using metal path From page 5 of the UT report, Scan # 3
The flaw exhibited 20% DAC at 5.910 and 7.650 inches MP. Max amplitude is 6.740 inches MP with the transducer exit point at 0.0 inches from the centerline of the weld and 139.20 inches from the 0" reference. (Use of 20% DAC vs. 50% max amp for indications > 100% DAC is conservative.)

*) Determine correction factor due to curvature.
Radius = 67.94" (R). Surface distance to max amp point = 6.005" (C). C/R = .088 TAN.
INV TAN = 5.029 . COS = .996 . (R / COS) – R = .273 correction factor.

1) Determine the upper depth of the flaw from the exam surface.
5.910" (metal path at 20% upper) * COS of the measured angle 63° = 2.683" - .273 correction factor = 2.410 inches depth.

2) Determine the lower depth of the flaw from the exam surface.
7.650" (metal path at 20% lower) * COS of the measured angle 63° = 3.473" - .273" correction factor = 3.200 inches depth.

3) Determine the depth of the flaw from the exam surface at the maximum amplitude point.
6.740" (metal path at maximum amplitude point) * COS of the measured angle 63° = 3.060" - .273" correction factor = 2.787 inches depth.

4) Determine the distance from 0" reference to the maximum amplitude point of the flaw.
6.740" (metal path at maximum amplitude point) squared = 45.428 (a^2)
3.060" (depth at maximum amplitude point, before correction) squared = 9.364 (b^2)
$\sqrt{a^2 - b^2}$ = 6.005 inches of surface distance to the flaw from the transducer exit point.
139.20 (Lmax) + or – 6.005" (surf dist) = 145.205 inches from 0" reference.
(+ or – based on scan direction)

5) Determine S by picking the smaller of the following;
S = 2.410" (result of 1) = distance between exam surface and the upper flaw tip
>> OR <<
S = 5.50 (part "t") – 3.200 (result of 2) = 2.300" distance between the side opposite exam surface and the lower flaw tip

6) Determine 2d in though wall thickness.
3.200" (from step 2) – 2.410" (from step 1) = .790 inches.

Flaw Sizing Calculations Using Metal Path for Vessel Welds > 2"

For surface and subsurface single planar flaws oriented in plane normal to pressure retaining surface

Determination of surface or subsurface

0.4d = (2d / 2) * 0.4 = **.158"**

Compare to S (from step 5)

If S is less than 0.4d, the flaw is **surface.** a = 2d + S = **N/A** inches.

If S is greater than or equal to 0.4a the flaw is **sub-surface.** a = 2a / 2 = **.395** inches.

ℓ = **.80"** (for a/ℓ > 0.5, ℓ = 2a)

a = **.40"** (surf or sub surf circle one)

t = **5.5"** (part thickness)

S = **2.3"**

ISI Flaw Sizing Worksheet

Site/Unit:	NMC / PI2	Procedure:	ISI-UT-3	Outage No.:	PI2RF2002
Summary No.:	502618	Procedure Revision/FC:	9 / —	Report No.:	2002U010
Workscope:	ISI	Work Order No.:	0106946	Page:	___ of ___

1) Flaw Number #4 60°
2) Item Number B2 40
3) ISI Interval 3rd Interval — OK Reviewer SPW
4) Code Edition & Addenda 89 no addenda — OK Reviewer SPW
5) Method UT
6) Flaw Sketch (See Below) — OK Reviewer SPW

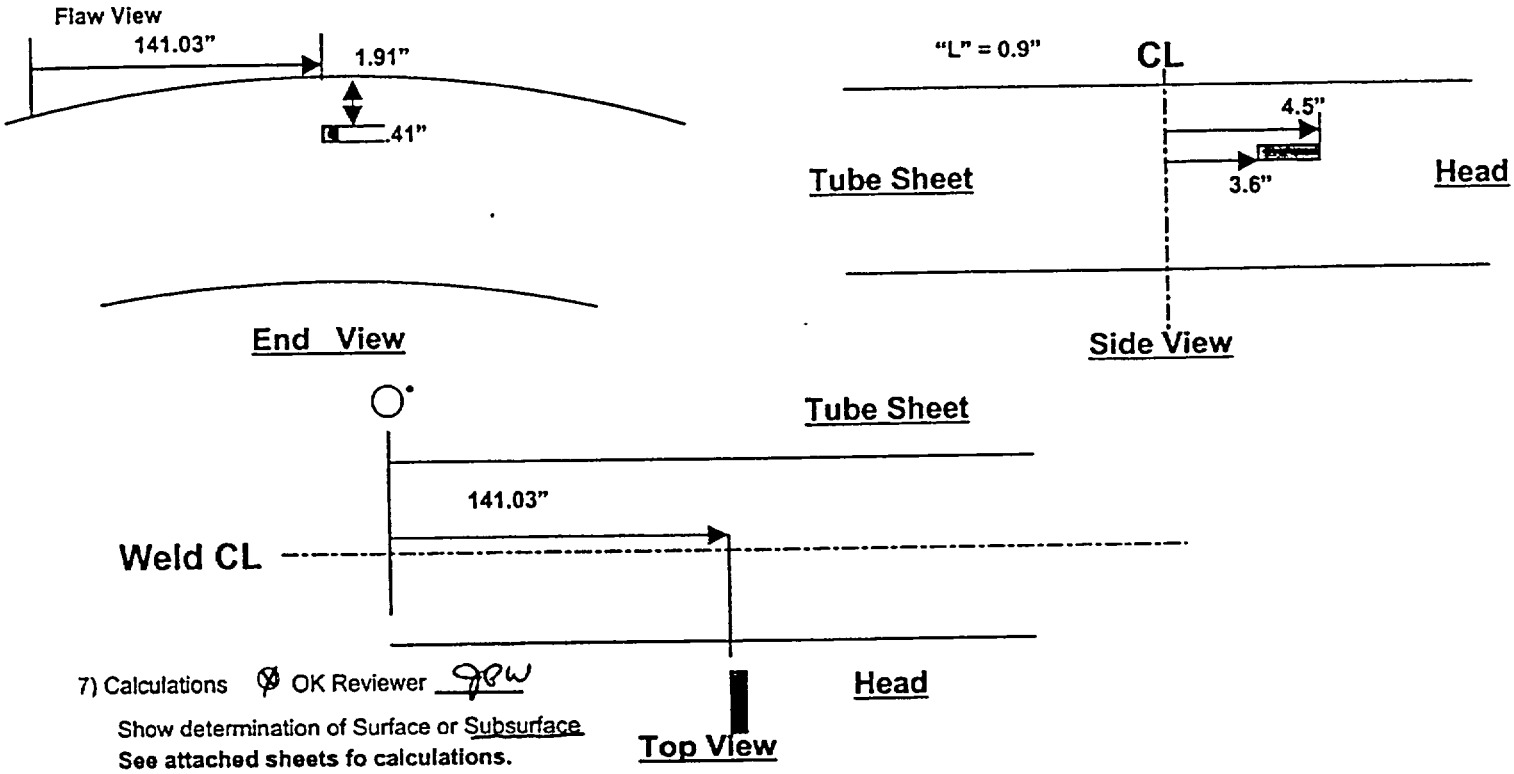

7) Calculations — OK Reviewer SPW

Show determination of Surface or Subsurface
See attached sheets fo calculations.

Show determination of type of "a" to use
See attached sheets fo calculations.

8) ISI-FE-1 Paragraph ~~7.0~~ 6.1 SPC - "Rounding-off Method" was used — Yes Preparer SPC — OK Reviewer SPW

9) Code Flaw Dimensions — OK Reviewer SPW
"l" = .90" "a" = .20" "t *nominal*" = N/A "t *measured*" = 5.5 "s" = 1.9" "w" = N/A

10) Flaw Type — OK Reviewer SPW — Subsurface Planar (UT/RT)

11) Flaw Characterization Figure — OK Reviewer SPW — IWA-3320-1

12) Flaw Characterization Figure Number FLAW # 1

13) Was IWA-3300 Flaw Characterization followed? — Yes — No — If no, why?

14) The correct Code Edition and Addenda was available and used. — Yes Preparer SPC — OK Reviewer SPW

15) Prepared by and date SEAN P. CLAY 2-12-02

The results are correct and the methodology used is in accordance with applicable codes, standards, specifications and procedures.

16) Review by and date 2-19-02

The review assures that the results are correct and the methodology used is in accordance with applicable codes, standards, specifications and procedures.

ISI Flaw Disposition Worksheet

NMC

Site/Unit: NMC1 PI2 | Procedure: ISI-UT-3 | Outage No.: PI2RF2002
Summary No.: 502618 | Procedure Revision/FC: 9 1 | Report No.: 20024010
Workscope: ISI | Work Order No.: 0106946 | Page: ____ of ____

1) Flaw Number 60° #4 | 3) ISI Interval 3rd | OK Reviewer DSW
2) Item Number B-B B2.40 | 4) Code Edition & Addenda 1989 No Addenda | OK Reviewer DSW
5) Acceptance Standard IWB-3510 | OK Reviewer DSW
6) Calculations (See Below) | OK Reviewer DSW

FLAW IS SUBSURFACE

$\ell = .90''$ $t = 5.5''$

$a = .20''$ $S = 1.9''$

$a/\ell = \frac{.20''}{.90''} = .22$

$a/t_{actual} \times 100\% = \frac{.20}{5.50} \times 100\% = 3.6\%$

$Y = S/a = \frac{1.9''}{.20''} = 9.5$ $\therefore Y = 1$

FROM TABLE IWB-3510-1

$X = a/t$ allowable

.20	3.3Y ~~2.9Y~~
.22	X
.25	3.8Y

$\frac{.22-.20}{.25-.20}(3.8Y-3.3Y) = X-3.3Y$

$.4(.5Y) = X-3.3Y$

$3.3Y+.2Y = X$

$3.5Y = a/t$ allowable

7) Results OK Reviewer DSW

a/l = .22 Code allowable a/t% = 3.5% Calculated a/t% = 3.6% Laminar flaw surface area: (0.75 | w) = NA

8) Table used for analysis OK Reviewer DSW IWB-3510-1

9) Was linear interpolation used? Yes No If no, why?

10) Was IWA-3200 Significant Digits For Limiting Values followed? Yes No If no, why?

11) The correct Code Edition and Addenda was available and used. Yes Preparer KB OK Reviewer DSW

12) Statement of acceptability or rejectability with basis. OK Reviewer DSW Accept Reject

- ○ (a/t) Code allowable > (a/t) calculated
- OEM flaw evaluation handbook (see attached analysis)
- (a/t) Code allowable < (a/t) calculated

FLAW #60° #4 is Acceptable by WCAP 14166 Sec A-2 Page A2-7

13) Prepared by and date 2-14-02

The results are correct and the methodology used is in accordance with applicable codes, standards, specifications and procedures.

14) Engineering review by and date 2-14-2002

This review assures that the results are correct and the methodology used is in accordance with applicable codes, standards, specifications and procedures.

15) Approved by and date 2/14/02

This approval assures that all involved with this flaw sizing and flaw disposition were aware of the necessity that the results and the methodology are correct and in accordance with applicable codes, standards, specifications and procedures.

Outage # PI2 RF2002
Summary # 502618
WO # 0106946
FLAW # 60° #4
$\ell = .70''$ $S = 1.9''$
$a = .20''$ $t = 5.5''$

FLAW IS SUBSURFACE

78 .. 121

$\delta = S + a = 1.9'' + .20'' = 2.1''$

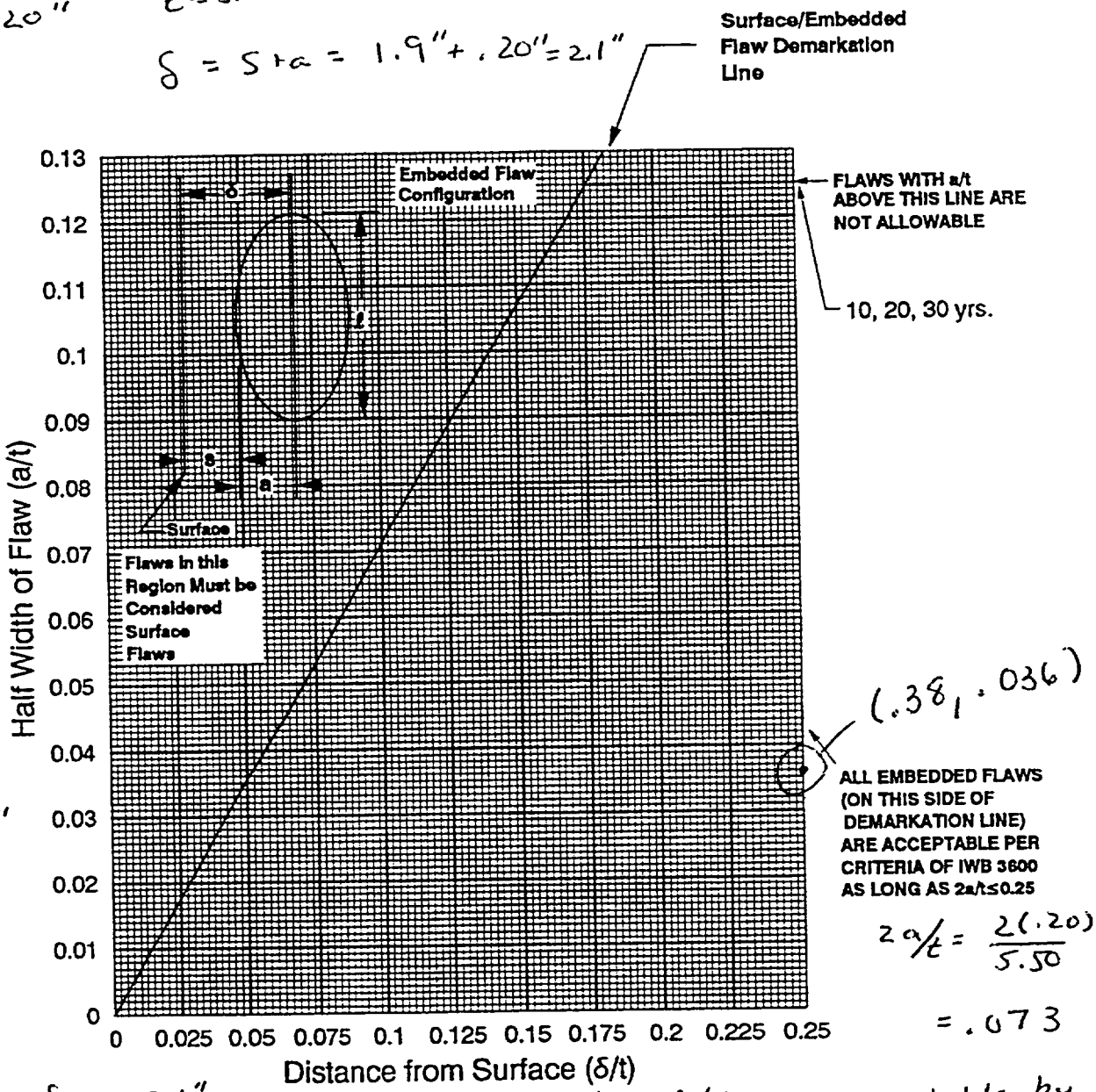

$a/t = \frac{.20''}{5.5''} = .036$

$2a/t = \frac{2(.20)}{5.50} = .073$

$\delta/t = \frac{2.1''}{5.5''} = .38$

FLAW # 60° #4 is acceptable by analysis WCAP 14166 Section A-2 Page A2-7.

Figure A-2.4 Flaw Evaluation Chart for the Tubesheet-Channel Head Junction for Prairie Island Units 1 and 2

X	Inside Surface		Surface Flaw	X	Longitudinal Flaw
X	Outside Surface	X	Embedded Flaw	X	Circumferential Flaw

Prepared By KSHGrb
2-14-02
DSW

Flaw Sizing Calculations Using Metal Path for Vessel Welds > 2"

For surface and subsurface single planar flaws oriented in plane normal to pressure retaining surface

ASME SECT XI 1989 W/ NO ADDENDA SPC INITIAL TO VERIFY

ISI Report # 2002U010 Evaluation Performed By: S. Clay Date: 02/12/02
Flaw # 60°#4 Reviewed By: J. Wren Date: 2-14-02

Length
Length of the flaw "ℓ" is determined by finding the difference between L1 and L2 for perpendicular scans, W1 and W2 for parallel scans.
L and W values are from page 5 of the UT report.
ℓ = 3.6 (L2) - 4.5 (L1) = - 0.9" inches.

Thickness
Thickness of the component at the location of the flaw, using UT or nom wall (circle one).
This value is from page 1 of the UT report.
"t" = 5.50 inches

Calibration
The measured angle in the calibration block was 63° degrees

Calculations using metal path From page 5 of the UT report, Scan # 3
The flaw exhibited 20% DAC at 4.500 and 5.410 inches MP. Max amplitude is 5.080 inches MP with the transducer exit point at 4.0 inches from the centerline of the weld and 136.50 inches from the 0" reference. (Use of 20% DAC vs. 50% max amp for indications > 100% DAC is conservative.)

*) Determine correction factor due to curvature.
Radius = 67.94" (R). Surface distance to max amp point = 4.526" (C). C/R = .067 TAN.
INV TAN = 3.833 . COS = .998 . (R / COS) – R = .136 correction factor.

1) Determine the upper depth of the flaw from the exam surface.
4.500" (metal path at 20% upper) * COS of the measured angle 63° = 2.043" - .136 correction factor = 1.907 inches depth.

2) Determine the lower depth of the flaw from the exam surface.
5.410" (metal path at 20% lower) * COS of the measured angle 63° = 2.456" - .136" correction factor = 2.320 inches depth.

3) Determine the depth of the flaw from the exam surface at the maximum amplitude point.
5.080" (metal path at maximum amplitude point) * COS of the measured angle 63° = 2.306" - .136" correction factor = 2.170 inches depth.

4) Determine the distance from 0" reference to the maximum amplitude point of the flaw.
5.080" (metal path at maximum amplitude point) squared = 25.806 (a^2)
2.306" (depth at maximum amplitude point, before correction) squared = 5.317 (b^2)
$\sqrt{a^2 - b^2}$ = 4.526 inches of surface distance to the flaw from the transducer exit point.
136.50 (Lmax) + or – 4.526" (surf dist) = 141.026 inches from 0" reference.
(+ or – based on scan direction)

5) Determine S by picking the smaller of the following;
S = 1.907" (result of 1) = distance between exam surface and the upper flaw tip
>> OR <<
S = 5.50 (part "t") – 2.320 (result of 2) = 3.180" distance between the side opposite exam surface and the lower flaw tip

6) Determine 2d in though wall thickness.
2.320" (from step 2) – 1.907" (from step 1) = .413 inches.

Flaw Sizing Calculations Using Metal Path for Vessel Welds > 2"

For surface and subsurface single planar flaws oriented in plane normal to pressure retaining surface

Determination of surface or subsurface

0.4d = (2d / 2) * 0.4 = .083"

Compare to S (from step 5)

If S is less than 0.4d, the flaw is **surface**. a = 2d + S = N/A inches.

If S is greater than or equal to 0.4a the flaw is **sub-surface**. a = 2a / 2 = .207 inches.

l = .90" (for a/l > 0.5, l = 2a) t = 5.5" (part thickness)

a = .20" (surf or sub surf circle one) S = 1.9"

80 121

ISI Flaw Sizing Worksheet

Site/Unit:	NMC / PI2	Procedure:	ISI-UT-3	Outage No.:	PI2RF2002
Summary No :	502618	Procedure Revision/FC:	9 / ---	Report No.:	2002U010
Workscope:	ISI	Work Order No.:	0106946	Page:	___ of ___

1) Flaw Number #5 60°
2) Item Number B2.40
3) ISI Interval 3rd Interval — OK Reviewer
4) Code Edition & Addenda 89 no addenda — OK Reviewer
5) Method UT
6) Flaw Sketch (See Below) — OK Reviewer

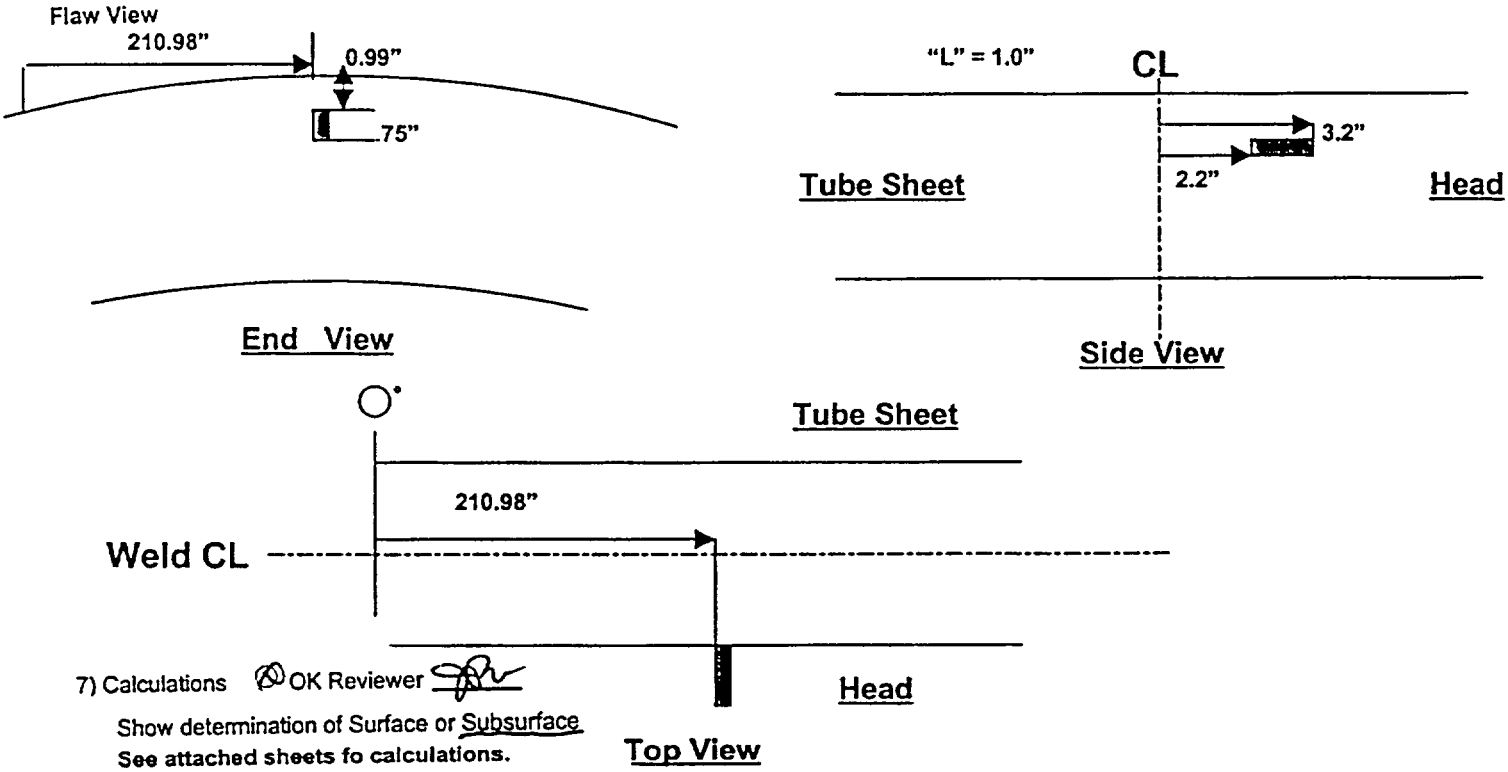

7) Calculations OK Reviewer
Show determination of Surface or Subsurface
See attached sheets fo calculations.

Show determination of type of "a" to use
See attached sheets fo calculations.

8) ISI-FE-1 Paragraph ~~7.0~~ 6.1 SPC - "Rounding-off Method" was used ◉ Yes Preparer SPC OK Reviewer
9) Code Flaw Dimensions OK Reviewer
"l" = 1.0" "a" = .40" "t *nominal*" = N/A "t *measured*" = 5.5 "s" = 1.0" "w" = N/A
10) Flaw Type OK Reviewer Subsurface Planar (UT/RT)
11) Flaw Characterization Figure OK Reviewer IWA-3320-1
12) Flaw Characterization Figure Number FLAW # 1
13) Was IWA-3300 Flaw Characterization followed? ◉ Yes ○ No If no, why?

14) The correct Code Edition and Addenda was available and used. ◉ Yes Preparer SPC OK Reviewer

15) Prepared by and date SEAN P. CLAY 2-12-02
The results are correct and the methodology used is in accordance with applicable codes, standards, specifications and procedures.

16) Review by and date 2-19-02
The review assures that the results are correct and the methodology used is in accordance with applicable codes, standards, specifications and procedures.

82 121

ISI Flaw Disposition Worksheet

NMC

Site/Unit: NMC 1 PI2 | Procedure: ISI-UT-3 | Outage No.: PI2RF2002
Summary No.: 502618 | Procedure Revision/FC: 9 1 | Report No.: 20024010
Workscope: ISI | Work Order No.: 0106946 | Page: ___ of ___

1) Flaw Number 60° #5
2) Item Number B-B B2.40
3) ISI Interval 3rd.
4) Code Edition & Addenda 1989 No. Addenda
5) Acceptance Standard IWB-3510
6) Calculations (See Below)

☑ OK Reviewer KSH
☑ OK Reviewer KSH
☑ OK Reviewer KSH
☑ OK Reviewer KSH

a = FLAW is SUBSURFACE.

$a = .40''$ $t = 5.5''$

$l = 1.0$ $s = 1.0''$

$a/l = \frac{.40}{1.0} = .40$

$a/t_{actual} \times 100\% = \frac{.40}{5.5} \times 100 = 7.3\%$

$a/t_{allowed}$ @ .40 $= 5.8\%$

$\gamma = s/a = \frac{1.0}{.40} = 2.5$

$\therefore \gamma = 1$

FLAW is NOT acceptable by TABLE IWB-3510-1 continue FLAW analysis using WCAP-14166.

7) Results ◉ OK Reviewer KSH
a/l = .40 Code allowable a/t% = 5.8 Calculated a/t% = 7.3 Laminar flaw surface area: (0.75 | w) = NA
8) Table used for analysis ◉ OK Reviewer KSH IWB-3510-1
9) Was linear interpolation used? ○ Yes ◉ No If no, why?
ON TABLE
10) Was IWA-3200 Significant Digits For Limiting Values followed? ◉ Yes ○ No If no, why?

11) The correct Code Edition and Addenda was available and used. ◉ Yes Preparer DSW ◉ OK Reviewer KSH
12) Statement of acceptability or rejectability with basis. ◉ OK Reviewer KSH ◉ Accept ○ Reject
○ (a/t) Code allowable > (a/t) calculated
◉ OEM flaw evaluation handbook (see attached analysis)
◉ (a/t) Code allowable < (a/t) calculated

FLAW is acceptable IAW WCAP 14166 - Section A2 Page A2-7.

13) Prepared by and date [signature] 2-14-2002
The results are correct and the methodology used is in accordance with applicable codes, standards, specifications and procedures.

14) Engineering review by and date [signature] 2-14-02
This review assures that the results are correct and the methodology used is in accordance with applicable codes, standards, specifications and procedures.

15) Approved by and date [signature] 2/18/02
This approval assures that all involved with this flaw sizing and flaw disposition were aware of the necessity that the results and the methodology are correct and in accordance with applicable codes, standards, specifications and procedures.

Outage PI2RF2002
Summary # 502618
WO. 0106946.
Report # 2002 4010
FLAW 60° #5
a = .40 t = 5.5
ℓ = 1.0 δ = 1.10

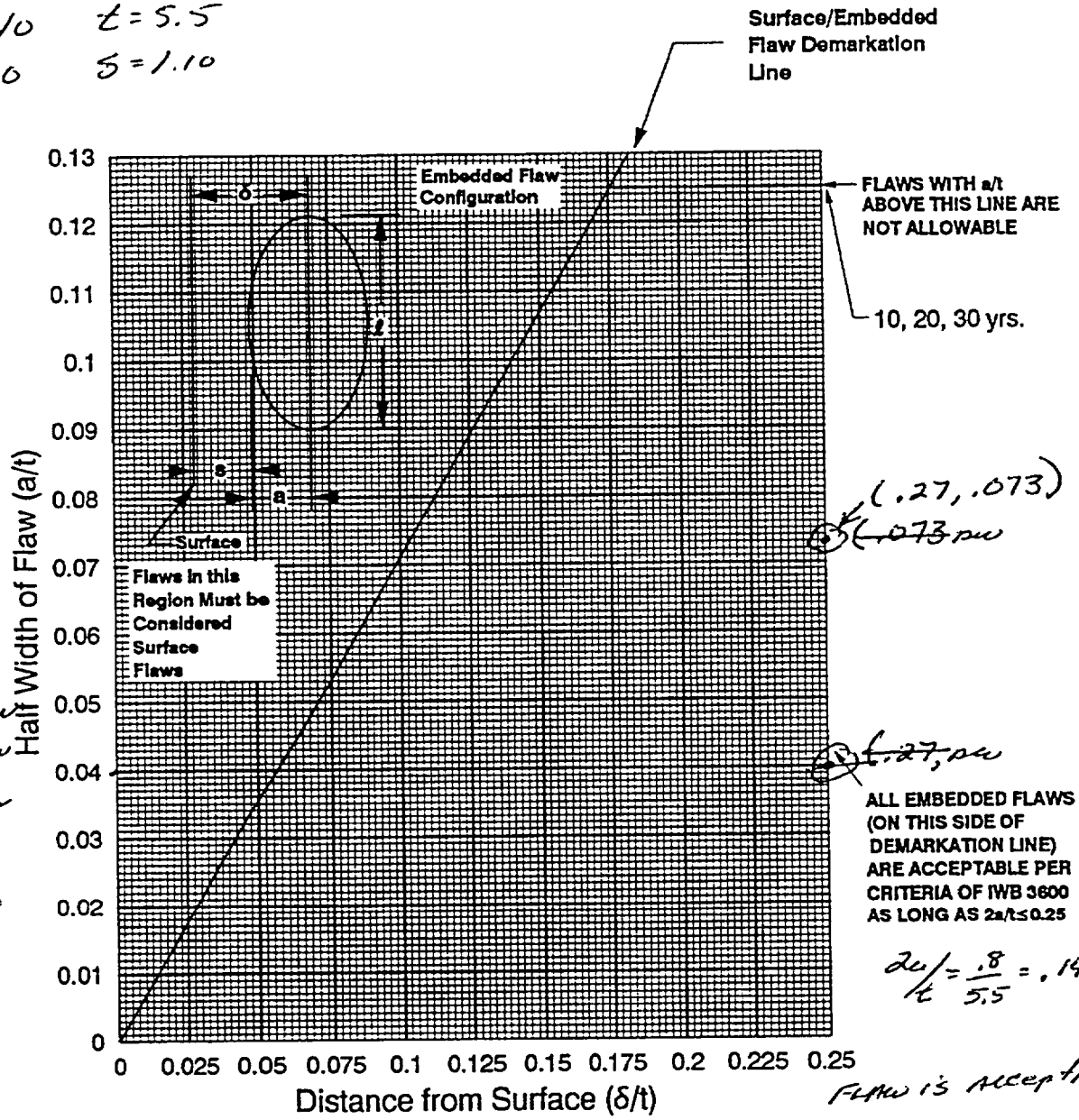

~~a/t = .40 pu / 1.0 pu~~
~~= .40 pu~~

a/t = .40 / 5.50
= .073

2a/t = .8 / 5.5 = .145 ok.

FLAW is acceptable

$$\delta/t = \frac{\delta + a}{t} = \frac{1.10 + .40}{5.50} = \frac{1.50}{5.50} = .27$$

Prepared by DSWhite 2-14-2002

Figure A-2.4 Flaw Evaluation Chart for the Tubesheet-Channel Head Junction for Prairie Island Units 1 and 2

L. Jh 2-14-02

X	Inside Surface	___	Surface Flaw	X	Longitudinal Flaw
X	Outside Surface	X	Embedded Flaw	X	Circumferential Flaw

Flaw Sizing Calculations Using Metal Path for Vessel Welds > 2"

For surface and subsurface single planar flaws oriented in plane normal to pressure retaining surface

ASME SECT XI 1989 W/ NO ADDENDA SPC INITIAL TO VERIFY

ISI Report # 2002U010 Evaluation Performed By: S. Clay Date: 02/12/02
Flaw # 60°#5 Reviewed By: J. Wren Date: 2-14-02

Length
Length of the flaw "*l*" is determined by finding the difference between L1 and L2 for perpendicular scans, W1 and W2 for parallel scans.
L and W values are from page 5 of the UT report.
l = -2.2 (L2) - 3.2 (L1) = - 1.0" inches.

Thickness
Thickness of the component at the location of the flaw, using UT or nom wall (circle one).
This value is from page 1 of the UT report.
"t" = 5.50 inches

Calibration
The measured angle in the calibration block was 63° degrees

Calculations using metal path From page 5 of the UT report, Scan # 4
The flaw exhibited 20% DAC at 2.330 and 3.990 inches MP. Max amplitude is 2.830 inches MP with the transducer exit point at 2.4 inches from the centerline of the weld and 213.50 inches from the 0" reference. (Use of 20% DAC vs. 50% max amp for indications > 100% DAC is conservative.)

*) Determine correction factor due to curvature.
Radius = 67.94" (R). Surface distance to max amp point = 2.522" (C). C/R = .037 TAN.
INV TAN = 2.119 . COS = .999 . (R / COS) – R = .068 correction factor.

1) Determine the upper depth of the flaw from the exam surface.
2.330" (metal path at 20% upper) * COS of the measured angle 63° = 1.058" - .068 correction factor = 0.990 inches depth.

2) Determine the lower depth of the flaw from the exam surface.
3.990" (metal path at 20% lower) * COS of the measured angle 63° = 1.811" - .068" correction factor = 1.743 inches depth.

3) Determine the depth of the flaw from the exam surface at the maximum amplitude point.
2.830" (metal path at maximum amplitude point) * COS of the measured angle 63° = 1.285" - .068" correction factor = 1.217 inches depth.

4) Determine the distance from 0" reference to the maximum amplitude point of the flaw.
2.830" (metal path at maximum amplitude point) squared = 8.009 (a^2)
1.285" (depth at maximum amplitude point, before correction) squared = 1.651 (b^2)
$\sqrt{a^2 - b^2}$ = 2.522 inches of surface distance to the flaw from the transducer exit point.
213.50 (Lmax) + or – 2.522" (surf dist) = 210.978 inches from 0" reference.
(+ or – based on scan direction)

5) Determine S by picking the smaller of the following;
S = 0.990" (result of 1) = distance between exam surface and the upper flaw tip
>> OR <<
S = 5.50 (part "t") – 1.743 (result of 2) = 3.757" distance between the side opposite exam surface and the lower flaw tip

6) Determine 2d in though wall thickness.
1.743" (from step 2) – 0.990" (from step 1) = .753 inches.

Flaw Sizing Calculations Using Metal Path for Vessel Welds > 2"

For surface and subsurface single planar flaws oriented in plane normal to pressure retaining surface

Determination of surface or subsurface

0.4d = (2d / 2) * 0.4 = **.151"**

Compare to S (from step 5)

If S is less than 0.4d, the flaw is **surface**. a = 2d + S = **N/A** inches.

If S is greater than or equal to 0.4a the flaw is **sub-surface**. a = 2a / 2 = **.377** inches.

l = **1.0"** (for a/l > 0.5, l = 2a) t = **5.5"** (part thickness)

a = **.40"** (surf or sub surf, circle one) S = **1.0"**

85 .. 121

86 121

ISI Flaw Sizing Worksheet

Site/Unit:	NMC / PI2	Procedure:	ISI-UT-3	Outage No.:	PI2RF2002
Summary No.:	502618	Procedure Revision/FC:	9 / --	Report No.:	2002U010
Workscope:	ISI	Work Order No.:	0106946	Page:	___ of ___

1) Flaw Number #6 60°
2) Item Number B2.40
3) ISI Interval 3rd Interval ⊗ OK Reviewer
4) Code Edition & Addenda 89 no addenda ⊗ OK Reviewer
5) Method UT
6) Flaw Sketch (See Below) ⊗ OK Reviewer

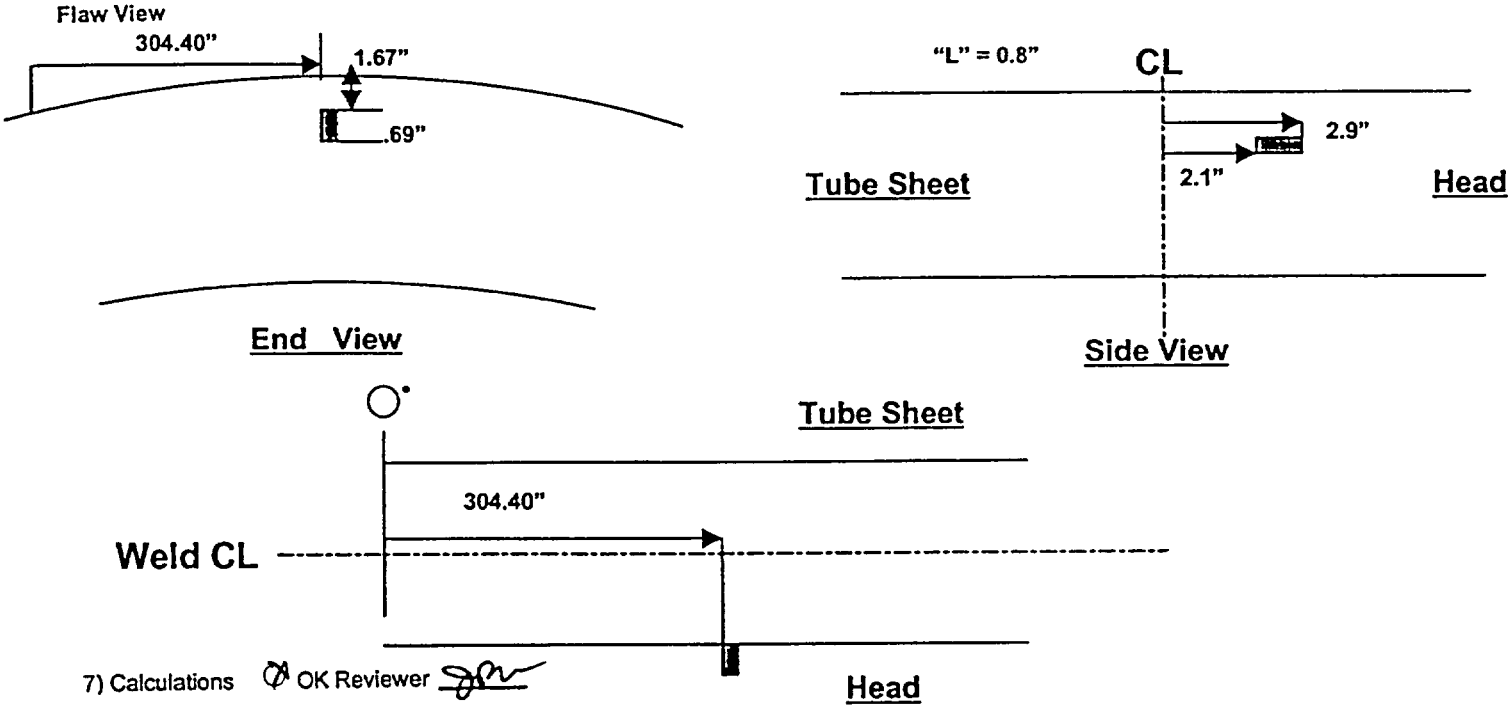

7) Calculations ⊗ OK Reviewer

Show determination of Surface or Subsurface
See attached sheets fo calculations.

Show determination of type of "a" to use
See attached sheets fo calculations.

8) ISI-FE-1 Paragraph ~~7.0~~ 6.1 SPC - "Rounding-off Method" was used ⊙ Yes Preparer SPC ⊗ OK Reviewer
9) Code Flaw Dimensions ⊗ OK Reviewer
"l" = .80" "a" = .35" "t *nominal*" = N/A "t *measured*" = 5.5 "s" = 1.6" "w" = N/A
10) Flaw Type ⊗ OK Reviewer Subsurface Planar (UT/RT)
11) Flaw Characterization Figure ⊗ OK Reviewer IWA-3320-1
12) Flaw Characterization Figure Number Flaw #1
13) Was IWA-3300 Flaw Characterization followed? ⊙ Yes ○ No If no, why?

14) The correct Code Edition and Addenda was available and used. ⊙ Yes Preparer SPC ⊗ OK Reviewer

15) Prepared by and date Sean P. Clay 2-14-02
The results are correct and the methodology used is in accordance with applicable codes, standards, specifications and procedures.

16) Review by and date 2-19-02
The review assures that the results are correct and the methodology used is in accordance with applicable codes, standards, specifications and procedures.

ISI Flaw Disposition Worksheet

Site/Unit: NMC 1 PI 2 | Procedure: ISI-UT-3 | Outage No.: PI2RF2002
Summary No.: 502618 | Procedure Revision/FC: 9 1 | Report No.: 20024016
Workscope: ISI | Work Order No.: 6106946 | Page: ___ of ___

1) Flaw Number 60° #6
2) Item Number B-B B2.40
3) ISI Interval 3rd.
4) Code Edition & Addenda 1985 No Addenda
5) Acceptance Standard IWB-3510
6) Calculations (See Below)

○ OK Reviewer ___
○ OK Reviewer ___
○ OK Reviewer ___
○ OK Reviewer ___

FLAW is subsurface,

$a = .35''$ $t = 5.5''$

$\ell = .80''$ $S = 16''$

$a/t_{actual} \times 100\% = \frac{.35''}{5.5''} \times 100 = 6.36\%$

$\gamma = S/a = \frac{16}{.35} = 4.57$

$\therefore \gamma = 1$

$a/\ell = \frac{.35''}{.80''} = .44$

$a/t\%_{allowed} @.45 = 6.7\%$ $a/t\%_{allowed} @.40 = 5.8\%$

$a/t\%_{allowed} @.44 = \frac{6.7-5.8}{.45-.40}(.44-.40) + 5.8 = \frac{.9}{.05}(.04) + 5.8$

$a/t\%_{allowed} @.44 = 6.5\%$

7) Results ● OK Reviewer KSL

a/l = .44 Code allowable a/t% = 6.5 Calculated a/t% = 6.36 Laminar flaw surface area: (0.75 | w) = NA

8) Table used for analysis ● OK Reviewer KSL IWB-3510-1

9) Was linear interpolation used? ● Yes ○ No If no, why?

10) Was IWA-3200 Significant Digits For Limiting Values followed? ● Yes ○ No If no, why?

11) The correct Code Edition and Addenda was available and used. ● Yes Preparer [signature] ● OK Reviewer KSL

12) Statement of acceptability or rejectability with basis. ● OK Reviewer KSL ● Accept ○ Reject

- ● (a/t) Code allowable > (a/t) calculated
- ○ OEM flaw evaluation handbook (see attached analysis)
- ○ (a/t) Code allowable < (a/t) calculated

13) Prepared by and date [signature] 2-14-2002

The results are correct and the methodology used is in accordance with applicable codes, standards, specifications and procedures.

14) Engineering review by and date [signature] 2-14-02

This review assures that the results are correct and the methodology used is in accordance with applicable codes, standards, specifications and procedures.

15) Approved by and date [signature] 2/18/02

This approval assures that all involved with this flaw sizing and flaw disposition were aware of the necessity that the results and the methodology are correct and in accordance with applicable codes, standards, specifications and procedures.

Flaw Sizing Calculations Using Metal Path for Vessel Welds > 2"

For surface and subsurface single planar flaws oriented in plane normal to pressure retaining surface

ASME SECT XI 1989 W/ NO ADDENDA SPC INITIAL TO VERIFY

ISI Report # 2002U010 Evaluation Performed By: S. Clay Date: 02/14/02
Flaw # 60°#6 Reviewed By: J. Wren Date: 2-14-02

Length
Length of the flaw "ℓ" is determined by finding the difference between L1 and L2 for perpendicular scans, W1 and W2 for parallel scans.
L and W values are from page 5 of the UT report.
ℓ = -2.1 (L2) - 2.9 (L1) = - 0.8" inches.

Thickness
Thickness of the component at the location of the flaw, using UT or nom wall (circle one).
This value is from page 1 of the UT report.
"t" = 5.50 inches

Calibration
The measured angle in the calibration block was 63° degrees

Calculations using metal path From page 5 of the UT report, Scan # 4
The flaw exhibited 20% DAC at 3.990 and 5.500 inches MP. Max amplitude is 4.490 inches MP with the transducer exit point at 2.3 inches from the centerline of the weld and 308.40 inches from the 0" reference. (Use of 20% DAC vs. 50% max amp for indications > 100% DAC is conservative.)

*) Determine correction factor due to curvature.
Radius = 67.94" (R). Surface distance to max amp point = 4.001" (C). C/R = .059 TAN.
INV TAN = 3.377 . COS = .998 . (R / COS) – R = .136 correction factor.

1) Determine the upper depth of the flaw from the exam surface.
3.990" (metal path at 20% upper) * COS of the measured angle 63° = 1.811" - .136 correction factor = 1.675 inches depth.

2) Determine the lower depth of the flaw from the exam surface.
5.500" (metal path at 20% lower) * COS of the measured angle 63° = 2.497" - .136" correction factor = 2.361 inches depth.

3) Determine the depth of the flaw from the exam surface at the maximum amplitude point.
4.490" (metal path at maximum amplitude point) * COS of the measured angle 63° = 2.038" - .136" correction factor = 1.902 inches depth.

4) Determine the distance from 0" reference to the maximum amplitude point of the flaw.
4.490" (metal path at maximum amplitude point) squared = 20.160 (a^2)
2.038" (depth at maximum amplitude point, before correction) squared = 4.153 (b^2)
$\sqrt{a^2 - b^2}$ = 4.001 inches of surface distance to the flaw from the transducer exit point.
308.40 (Lmax) + or – 4.001" (surf dist) = 304.399 inches from 0" reference.
(+ or – based on scan direction)

5) Determine S by picking the smaller of the following;
S = 1.675" (result of 1) = distance between exam surface and the upper flaw tip
>> OR <<
S = 5.50 (part "t") – 2.361 (result of 2) = 3.139" distance between the side opposite exam surface and the lower flaw tip

6) Determine 2d in though wall thickness.
2.361" (from step 2) – 1.675" (from step 1) = .686 inches.

Flaw Sizing Calculations Using Metal Path for Vessel Welds > 2"

For surface and subsurface single planar flaws oriented in plane normal to pressure retaining surface

Determination of surface or subsurface

0.4d = (2d / 2) * 0.4 = **.137"**

Compare to S (from step 5)

If S is less than 0.4d, the flaw is **surface**. a = 2d + S = **N/A** inches.

If S is greater than or equal to 0.4a the flaw is **sub-surface**. a = 2a / 2 = **.343** inches.

ℓ = **0.8"** (for a/ℓ > 0.5, ℓ = 2a) t = **5.5"** (part thickness)

a = **.35"** (surf or sub surf circle one) S = **1.6"**

89 121

90 . 121

ISI Flaw Sizing Worksheet

Site/Unit:	NMC / PI2	Procedure:	ISI-UT-3	Outage No.:	PI2RF2002
Summary No.:	502618	Procedure Revision/FC:	9 / —	Report No.:	2002U010
Workscope:	ISI	Work Order No.:	0106946	Page:	of

1) Flaw Number #7 60°
2) Item Number B2.40
3) ISI Interval 3rd Interval — OK Reviewer
4) Code Edition & Addenda 89 no addenda — OK Reviewer
5) Method UT
6) Flaw Sketch (See Below) — OK Reviewer

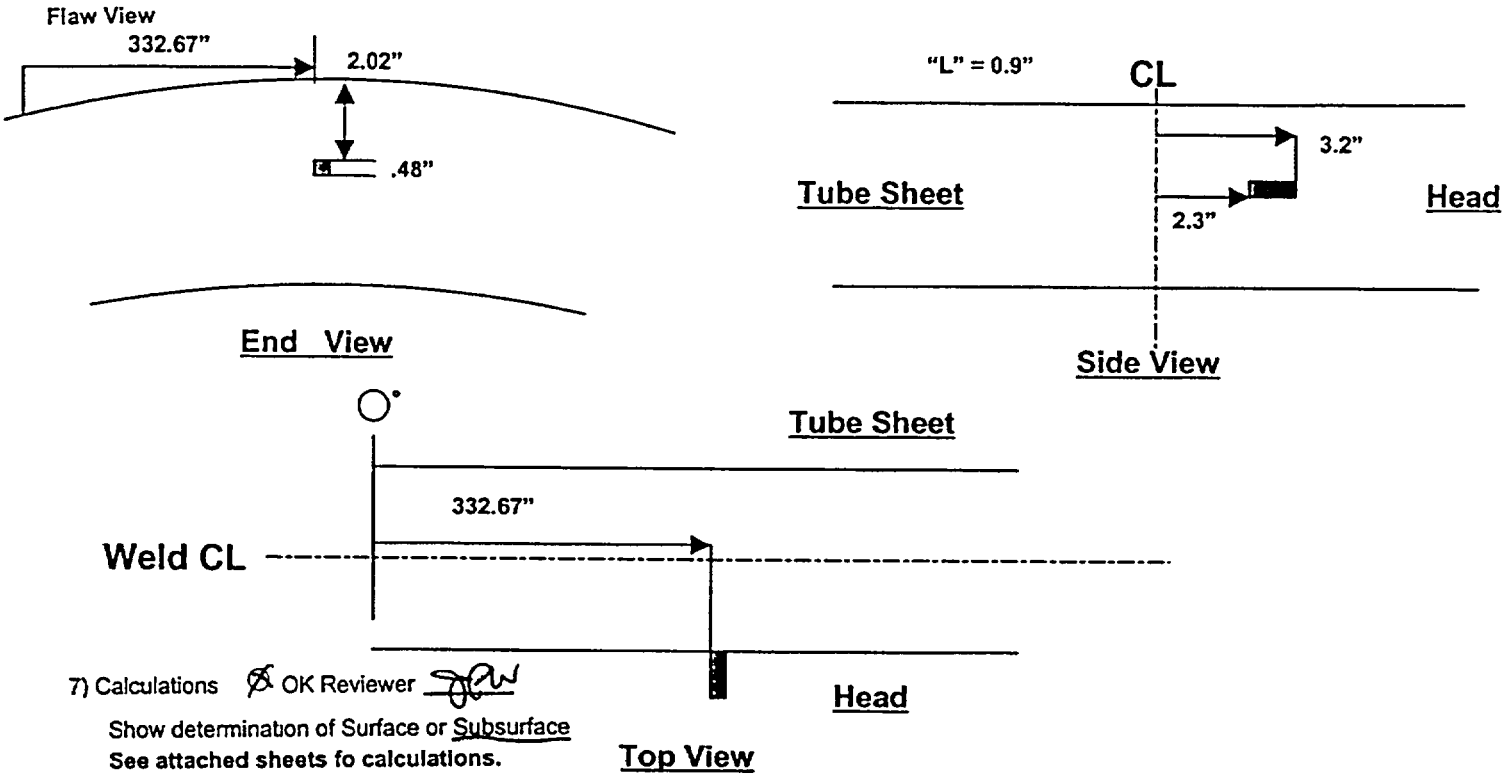

7) Calculations OK Reviewer

Show determination of Surface or Subsurface
See attached sheets fo calculations.

Show determination of type of "a" to use
See attached sheets fo calculations.

8) ISI-FE-1 Paragraph ~~7.0~~ 6.1 SPC - "Rounding-off Method" was used ◉ Yes Preparer SPC OK Reviewer

9) Code Flaw Dimensions OK Reviewer

"l" = .90" "a" = .25" "t *nominal*" = N/A "t *measured*" = 5.5 "s" = 2.0" "w" = N/A

10) Flaw Type OK Reviewer Subsurface Planar (UT/RT)

11) Flaw Characterization Figure OK Reviewer IWA-3320-1

12) Flaw Characterization Figure Number FLAW # 1

13) Was IWA-3300 Flaw Characterization followed? ◉ Yes ○ No If no, why?

14) The correct Code Edition and Addenda was available and used. ◉ Yes Preparer SPC OK Reviewer

15) Prepared by and date Sean P. CLAY 2-14-02

The results are correct and the methodology used is in accordance with applicable codes, standards, specifications and procedures.

16) Review by and date 2-19-02

The review assures that the results are correct and the methodology used is in accordance with applicable codes, standards, specifications and procedures.

91 121

ISI Flaw Disposition Worksheet

NMC

Site/Unit: NMC1 PI2 | Procedure: ISI-UT-3 | Outage No.: PI2RF2002
Summary No.: 502618 | Procedure Revision/FC: 9 1 | Report No.: 20020010
Workscope: ISI | Work Order No.: 0106946 | Page: ____ of ____

1) Flaw Number 60° #7 | 3) ISI Interval 3rd | OK Reviewer KJL
2) Item Number B-B B2.40 | 4) Code Edition & Addenda 1989 No Addenda | OK Reviewer KJL
FLAW is Subsurface | 5) Acceptance Standard IWB-3510 | OK Reviewer KJL
$\ell = 0.9''$ $t = 5.5''$ | 6) Calculations (See Below) | OK Reviewer KJL
$a = .25''$ $S = 2.0''$

$a/\ell = \frac{.25''}{0.9''} = .28$ $a/t_{actual} \times 100\% = \frac{.25''}{5.5''} \times 100\% = 4.5\%$ $Y = S/a = \frac{2.0''}{.25''} = 8$ $\therefore Y = 1$

FROM TABLE IWB 3510-1

0.25	3.8Y	
0.28	X	
0.30	4.4Y	

$$\frac{(0.28-0.25)(4.4Y-3.8Y)}{0.30-0.25} = X - 3.8Y$$

$$\frac{0.03}{0.05}(4.4Y-3.8Y) = X - 3.8Y$$

$$.36Y + 3.8Y = X$$

$$4.16\% = a/t_{allowable}$$

7) Results OK Reviewer KJL
a/l = .28 Code allowable a/t% = 4.16% Calculated a/t% = 4.5% Laminar flaw surface area: (0.75 | w) = N/A
8) Table used for analysis ○ OK Reviewer ____ IWB-3510-1
9) Was linear interpolation used? ● Yes ○ No If no, why?

10) Was IWA-3200 Significant Digits For Limiting Values followed? ● Yes ○ No If no, why?

11) The correct Code Edition and Addenda was available and used. ● Yes Preparer KJL ● OK Reviewer ____
12) Statement of acceptability or rejectability with basis. ○ OK Reviewer ____ ● Accept ○ Reject
○ (a/t) Code allowable > (a/t) calculated
● OEM flaw evaluation handbook (see attached analysis)
● (a/t) Code allowable < (a/t) calculated

FLAW IS Acceptable by WCAP 14166 Sec A-2 Page A2-7

13) Prepared by and date ____ 2-14-02
The results are correct and the methodology used is in accordance with applicable codes, standards, specifications and procedures.

14) Engineering review by and date ____ 2-14-2002
This review assures that the results are correct and the methodology used is in accordance with applicable codes, standards, specifications and procedures.

15) Approved by and date ____ 2/18/02
This approval assures that all involved with this flaw sizing and flaw disposition were aware of the necessity that the results and the methodology are correct and in accordance with applicable codes, standards, specifications and procedures.

Outage # P12RF2002
Summary # 502618
WO # 0106946
Flaw # 60° #7

FLAW IS SUBSURFACE

92 - 121

$\ell = 0.9''$ $t = 5.5''$
$a = .25''$ $s = 2.0''$
$\delta = s + a = 2.0'' + .25'' = 2.25''$

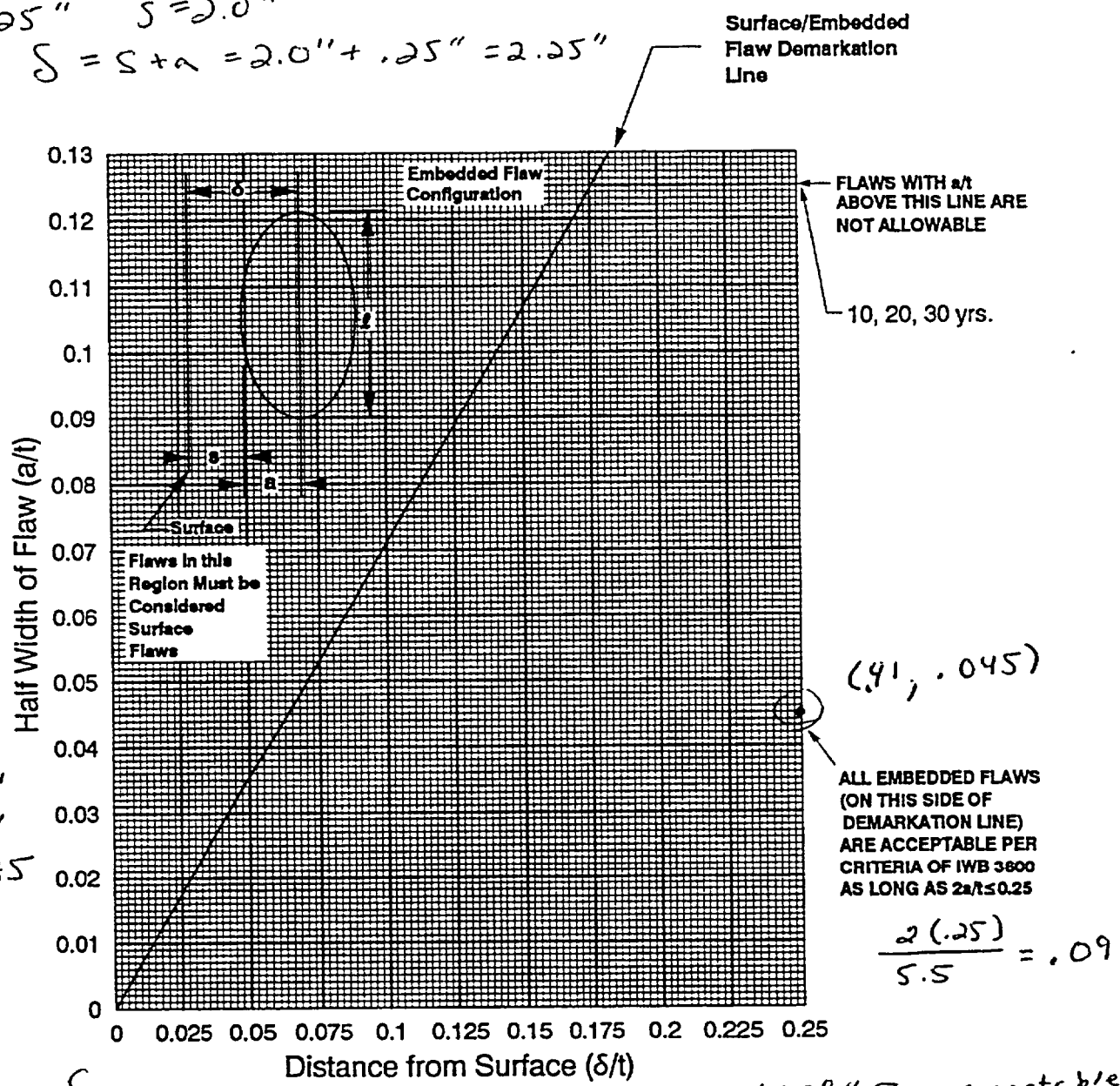

$a/t = \frac{.25''}{5.5''} = .045$

$\frac{2(.25)}{5.5} = .09$

$\delta/t = \frac{2.25''}{5.5''} = .41$

FLAW #60° #7 is acceptable by WCAP analysis WCAP 14166 Sec. A-2 Page A2-7

Figure A-2.4 Flaw Evaluation Chart for the Tubesheet-Channel Head Junction for Prairie Island Units 1 and 2

X	Inside Surface	___	Surface Flaw	X	Longitudinal Flaw
X	Outside Surface	X	Embedded Flaw	X	Circumferential Flaw

Prepared By - K. [illegible]
2-14-02
Date

Flaw Sizing Calculations Using Metal Path for Vessel Welds > 2"

For surface and subsurface single planar flaws oriented in plane normal to pressure retaining surface

ASME SECT XI 1989 W/ NO ADDENDA SPC INITIAL TO VERIFY

ISI Report # 2002U010 Evaluation Performed By: S. Clay Date: 02/14/02
Flaw # 60°#7 Reviewed By: J. Wren Date: 2/14/02

Length
Length of the flaw "ℓ" is determined by finding the difference between L1 and L2 for perpendicular scans, W1 and W2 for parallel scans.
L and W values are from page 5 of the UT report.
ℓ = -2.3 (L2) - 3.2 (L1) = - 0.9" inches.

Thickness
Thickness of the component at the location of the flaw, using UT or nom wall (circle one).
This value is from page 1 of the UT report.
"t" = 5.50 inches

Calibration
The measured angle in the calibration block was 63° degrees

Calculations using metal path From page 5 of the UT report, Scan # 3
The flaw exhibited 20% DAC at 4.740 and 5.800 inches MP. Max amplitude is 5.240 inches MP with the transducer exit point at 2.5 inches from the centerline of the weld and 328.00 inches from the 0" reference. (Use of 20% DAC vs. 50% max amp for indications > 100% DAC is conservative.)

*) Determine correction factor due to curvature.
Radius = 67.94" (R). Surface distance to max amp point = 4.669" (C). C/R = .069 TAN.
INV TAN = 3.947 . COS = .998 . (R / COS) – R = .136 correction factor.

1) Determine the upper depth of the flaw from the exam surface.
4.740" (metal path at 20% upper) * COS of the measured angle 63° = 2.152" - .136 correction factor = 2.016 inches depth.

2) Determine the lower depth of the flaw from the exam surface.
5.800" (metal path at 20% lower) * COS of the measured angle 63° = 2.633" - .136" correction factor = 2.497 inches depth.

3) Determine the depth of the flaw from the exam surface at the maximum amplitude point.
5.240" (metal path at maximum amplitude point) * COS of the measured angle 63° = 2.379" - .136" correction factor = 2.243 inches depth.

4) Determine the distance from 0" reference to the maximum amplitude point of the flaw.
5.240" (metal path at maximum amplitude point) squared = 27.458 (a^2)
2.379" (depth at maximum amplitude point, before correction) squared = 5.660 (b^2)
$\sqrt{a^2 - b^2}$ = 4.669 inches of surface distance to the flaw from the transducer exit point.
328.00 (Lmax) + or – 4.827" (surf dist) = 332.669 inches from 0" reference.
(+ or – based on scan direction)

5) Determine S by picking the smaller of the following;
S = 2.016" (result of 1) = distance between exam surface and the upper flaw tip
>> OR <<
S = 5.50 (part "t") – 2.497 (result of 2) = 3.003" distance between the side opposite exam surface and the lower flaw tip

6) Determine 2d in though wall thickness.
2.497" (from step 2) – 2.016" (from step 1) = .481 inches.

Flaw Sizing Calculations Using Metal Path for Vessel Welds > 2"

For surface and subsurface single planar flaws oriented in plane normal to pressure retaining surface

Determination of surface or subsurface

0.4d = (2d / 2) * 0.4 = **.096"**

Compare to S (from step 5)

If S is less than 0.4d, the flaw is **surface.** a = 2d + S = **N/A** inches

If S is greater than or equal to 0.4a the flaw is **sub-surface.** a = 2a / 2 = **.241** inches.

l = **0.9"** (for a/l > 0.5, l = 2a)

t = **5.5"** (part thickness)

a = **.25"** (surf or sub surf circle one)

S = **2.0"**

94 121

95 121

ISI Flaw Sizing Worksheet

Site/Unit:	NMC / PI2	Procedure:	ISI-UT-3	Outage No.:	PI2RF2002
Summary No.:	502618	Procedure Revision/FC:	9 / —	Report No.:	2002U010
Workscope:	ISI	Work Order No.:	0106946	Page:	of

1) Flaw Number #8 60°
2) Item Number B2.40
3) ISI Interval 3rd Interval — OK Reviewer
4) Code Edition & Addenda 89 no addenda — OK Reviewer
5) Method UT
6) Flaw Sketch (See Below) — OK Reviewer

Flaw View

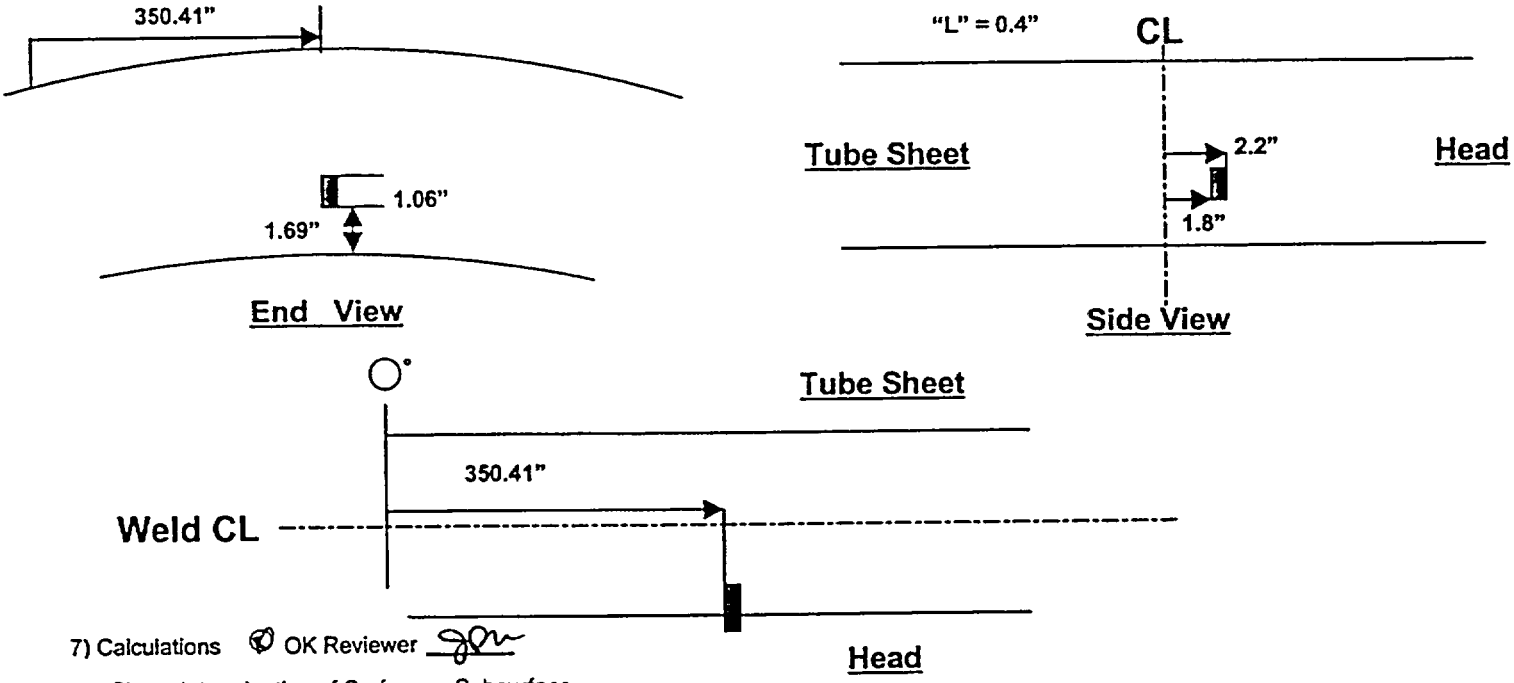

7) Calculations OK Reviewer

Show determination of Surface or Subsurface
See attached sheets fo calculations.

Show determination of type of "a" to use
See attached sheets fo calculations.

8) ISI-FE-1 Paragraph ~~7.0~~ 6.1 SPC - "Rounding-off Method" was used ⊙ Yes Preparer SPC OK Reviewer
9) Code Flaw Dimensions OK Reviewer
"l" = 1.1" "a" = .55" "t *nominal*" = N/A "t *measured*" = 5.5 "s" = 1.7" "w" = N/A
10) Flaw Type OK Reviewer Subsurface Planar (UT/RT)
11) Flaw Characterization Figure OK Reviewer IWA-3320-1
12) Flaw Characterization Figure Number FLAW #3
13) Was IWA-3300 Flaw Characterization followed? ⊙ Yes ○ No If no, why?

14) The correct Code Edition and Addenda was available and used. ⊙ Yes Preparer SPC OK Reviewer

15) Prepared by and date
SEAN P. CLAY 2-14-02
The results are correct and the methodology used is in accordance with applicable codes, standards, specifications and procedures.

16) Review by and date 2-19-02
The review assures that the results are correct and the methodology used is in accordance with applicable codes, standards, specifications and procedures.

96 121

ISI Flaw Disposition Worksheet

NMC

Site/Unit: NMC PI2 | Procedure: ISI-UT-3 | Outage No.: P12RF2002
Summary No.: 502618 | Procedure Revision/FC: 9 1 | Report No.: 2002U010
Workscope: ISI | Work Order No.: 01 06946 | Page: ___ of ___

1) Flaw Number 60° #8 | 3) ISI Interval 3rd | OK Reviewer DSW
2) Item Number B-B B2.40 | 4) Code Edition & Addenda 1989 No Addenda | OK Reviewer DSW
5) Acceptance Standard IWB-3510 | OK Reviewer DSW
6) Calculations (See Below) | OK Reviewer DSW

FLAW IS SUBSURFACE
$t = 5.5''$
$\ell = 1.1''$
$a = .55''$ $S = 1.7''$
$a/\ell = \frac{.55''}{1.1''} = .5$
$a/t_{actual} \times 100\% = \frac{.55''}{5.5''} \times 100\% = 10\%$
$Y = \frac{1.7''}{.55''} = S/a = 3.1 \therefore Y = 1$
FROM TABLE IWB-3510-1
$a/t\%_{allowed} = 7.6Y = 7.6\%$ @ .50

FLAW IS NOT ACCEPTABLE per Table IWB-3510-1. Continue FLAW ANALYSIS PER WCAP 14166 - FLAW EVALUATION HANDBOOK

7) Results OK Reviewer DSW
a/l = .5 Code allowable a/t% = 7.6% Calculated a/t% = 10.0% Laminar flaw surface area: (0.75 l w) = N/A
8) Table used for analysis OK Reviewer DSW IWB-3510-1
9) Was linear interpolation used? ○ Yes ● No If no, why?
ON TABLE
10) Was IWA-3200 Significant Digits For Limiting Values followed? ● Yes ○ No If no, why?

11) The correct Code Edition and Addenda was available and used. ● Yes Preparer KJZ ● OK Reviewer KJZ
12) Statement of acceptability or rejectability with basis. ● OK Reviewer DSW ● Accept ○ Reject
○ (a/t) Code allowable > (a/t) calculated
● OEM flaw evaluation handbook (see attached analysis)
● (a/t) Code allowable < (a/t) calculated

FLAW ACCEPTABLE BY WCAP ~~14166~~ 14166 SECA-2 PAGE A2-7.

13) Prepared by and date
Loren Leth 2-15-02
The results are correct and the methodology used is in accordance with applicable codes, standards, specifications and procedures.

14) Engineering review by and date
Daniel A Whitson 2-15-2002
This review assures that the results are correct and the methodology used is in accordance with applicable codes, standards, specifications and procedures.

15) Approved by and date
Monica Vik 2/18/02
This approval assures that all involved with this flaw sizing and flaw disposition were aware of the necessity that the results and the methodology are correct and in accordance with applicable codes, standards, specifications and procedures.

Outage NO. PI2 RF 2002
Summary # 502618
WO# 0106946
FLAW # 60° #8
$\ell = 1.1''$ $t = 5.5''$
$a = .55''$ $S = 1.7''$

FLAW IS SUBSURFACE

$\delta = S + a = 1.7'' + .55'' = 2.25''$

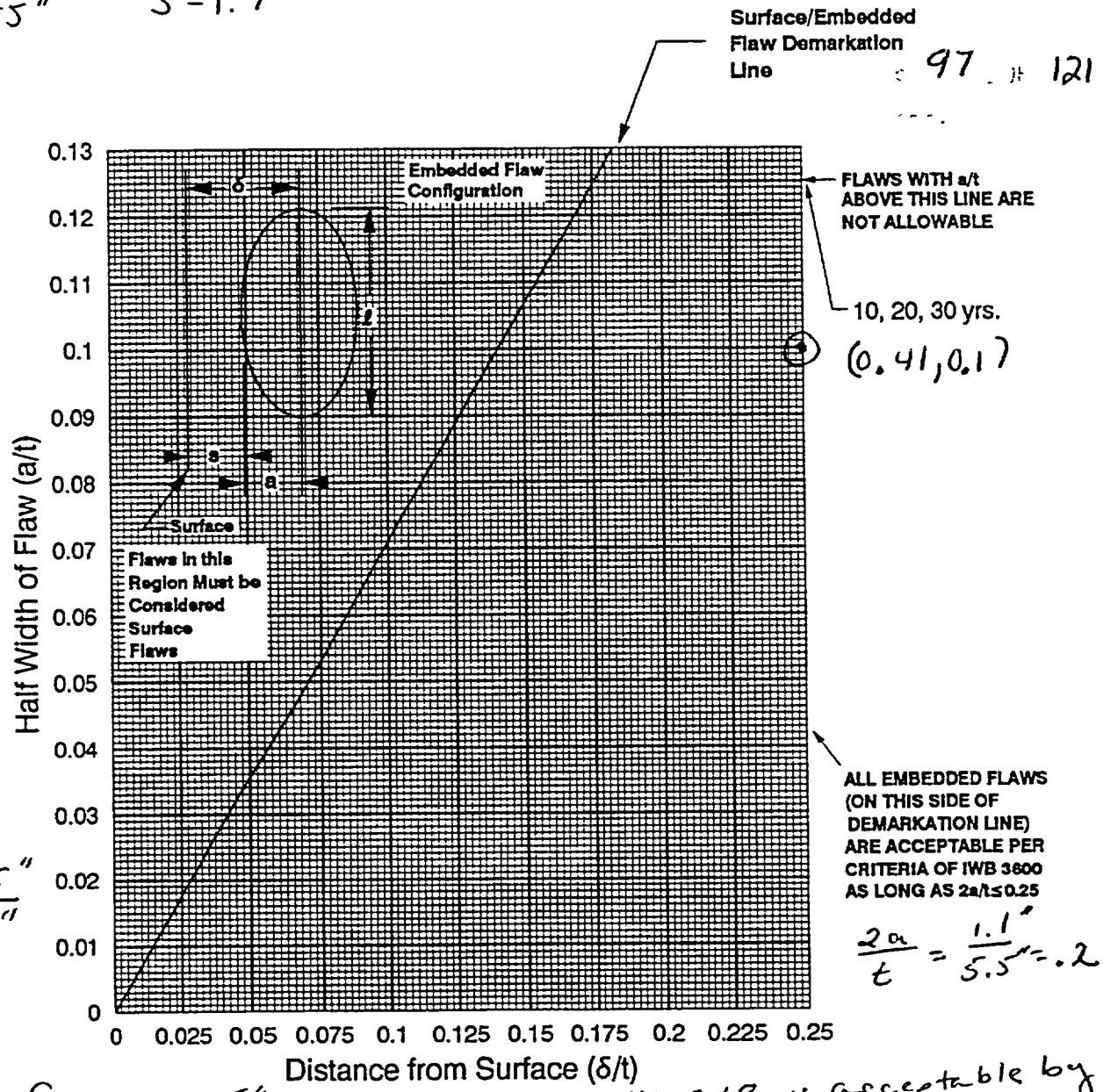

$a/t = \frac{.55''}{5.5''} = .1$

$\frac{2a}{t} = \frac{1.1''}{5.5''} = .2$

$\delta/t = \frac{2.25''}{5.5''} = 0.41$

FLAW #60° #8 is acceptable by analysis WCAP 14166 Section A-2 Page A2-7.

Figure A-2.4 Flaw Evaluation Chart for the Tubesheet-Channel Head Junction for Prairie Island Units 1 and 2

X	Inside Surface		Surface Flaw	X	Longitudinal Flaw
X	Outside Surface	X	Embedded Flaw	X	Circumferential Flaw

Prepared By [illegible]
2-15-92
[illegible]

Flaw Sizing Calculations Using Metal Path for Vessel Welds > 2"

For surface and subsurface single planar flaws oriented in plane normal to pressure retaining surface

ASME SECT XI 1989 W/ NO ADDENDA SPC INITIAL TO VERIFY

ISI Report # 2002U010 Evaluation Performed By: S. Clay Date: 02/14/02
Flaw # 60°#8 Reviewed By: J. Wren Date: 2-14-02

Length
Length of the flaw "*l*" is determined by finding the difference between L1 and L2 for perpendicular scans, W1 and W2 for parallel scans.
L and W values are from page 5 of the UT report.
l = -1.8 (L2) - 2.2 (L1) = - 0.4" inches.

Thickness
Thickness of the component at the location of the flaw, using UT or nom wall (circle one).
This value is from page 1 of the UT report.
"t" = 5.50 inches

Calibration
The measured angle in the calibration block was 63° degrees

Calculations using metal path From page 5 of the UT report, Scan # 3
The flaw exhibited 20% DAC at 6.660 and 8.990 inches MP. Max amplitude is 7.080 inches MP with the transducer exit point at 2.0 inches from the centerline of the weld and 344.10 inches from the 0" reference. (Use of 20% DAC vs. 50% max amp for indications > 100% DAC is conservative.)

*) Determine correction factor due to curvature.
Radius = 67.94" (R). Surface distance to max amp point = 6.308" (C). C/R = .093 TAN.
INV TAN = 5.313 . COS = .996 . (R / COS) – R = .273 correction factor.

1) Determine the upper depth of the flaw from the exam surface.
6.660" (metal path at 20% upper) * COS of the measured angle 63° = 3.024" - .273 correction factor = 2.751 inches depth.

2) Determine the lower depth of the flaw from the exam surface.
8.990" (metal path at 20% lower) * COS of the measured angle 63° = 4.081" - .273" correction factor = 3.808 inches depth.

3) Determine the depth of the flaw from the exam surface at the maximum amplitude point.
7.080" (metal path at maximum amplitude point) * COS of the measured angle 63° = 3.214" - .273" correction factor = 2.941 inches depth.

4) Determine the distance from 0" reference to the maximum amplitude point of the flaw.
7.080" (metal path at maximum amplitude point) squared = 50.126 (a^2)
3.214" (depth at maximum amplitude point, before correction) squared = 10.330 (b^2)
$\sqrt{a^2 - b^2}$ = 6.308 inches of surface distance to the flaw from the transducer exit point.
344.10 (Lmax) + or – 6.308" (surf dist) = 350.408 inches from 0" reference.
(+ or – based on scan direction)

5) Determine S by picking the smaller of the following;
S = 2.751" (result of 1) = distance between exam surface and the upper flaw tip
>> OR <<
S = 5.50 (part "t") – 3.808 (result of 2) = 1.692" distance between the side opposite exam surface and the lower flaw tip

6) Determine 2d in though wall thickness.
3.808" (from step 2) – 2.751" (from step 1) = 1.057 inches.

Flaw Sizing Calculations Using Metal Path for Vessel Welds > 2"

For surface and subsurface single planar flaws oriented in plane normal to pressure retaining surface

Determination of surface or subsurface

0.4d = (2d / 2) * 0.4 = **.212"**

Compare to S (from step 5)

If S is less than 0.4d, the flaw is **surface**. a = 2d + S = **N/A** inches.

If S is greater than or equal to 0.4a the flaw is **sub-surface**. a = 2a / 2 = **.529** inches.

l = **1.1"** (for a/*l* > 0.5, *l* = 2a) t = **5.5"** (part thickness)

a = **.55"** (surf or sub surf, circle one) S = **1.7"**

ISI Flaw Sizing Worksheet

Site/Unit:	NMC / PI2	Procedure:	ISI-UT-3	Outage No.:	PI2RF2002
Summary No.:	502618	Procedure Revision/FC:	9 / —	Report No.:	2002U010
Workscope:	ISI	Work Order No.:	0106946	Page. ___ of ___	

1) Flaw Number #9 60°
2) Item Number B2.40
3) ISI Interval 3rd Interval — OK Reviewer
4) Code Edition & Addenda 89 no addenda — OK Reviewer
5) Method UT
6) Flaw Sketch (See Below) — OK Reviewer

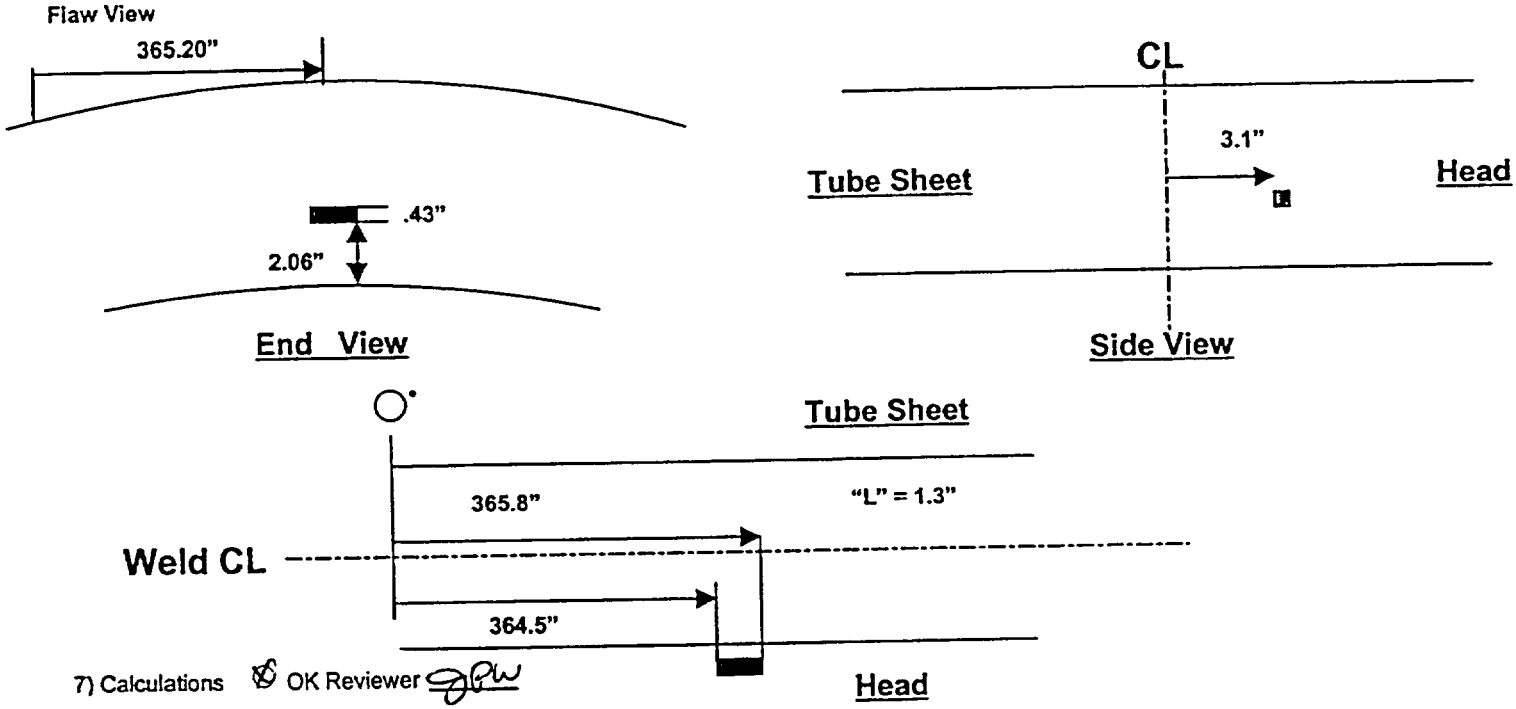

7) Calculations — OK Reviewer

Show determination of Surface or Subsurface
See attached sheets fo calculations.

Show determination of type of "a" to use
See attached sheets fo calculations.

8) ISI-FE-1 Paragraph ~~7.0~~ 6.1 SPC "Rounding-off Method" was used — Yes Preparer SPC — OK Reviewer

9) Code Flaw Dimensions — OK Reviewer

"l" = 1.3" "a" = .45" "t *nominal*" = N/A "t *measured*" = 5.5 "s" = 2.0" "w" = N/A

10) Flaw Type — OK Reviewer — Subsurface Planar (UT/RT)

11) Flaw Characterization Figure — OK Reviewer — IWA-3320-1

12) Flaw Characterization Figure Number FLAW # 2

13) Was IWA-3300 Flaw Characterization followed? Yes No If no, why?

14) The correct Code Edition and Addenda was available and used. Yes Preparer SPC — OK Reviewer

15) Prepared by and date Sean P. Clay 2-14-02

The results are correct and the methodology used is in accordance with applicable codes, standards, specifications and procedures.

16) Review by and date 2-19-02

The review assures that the results are correct and the methodology used is in accordance with applicable codes, standards, specifications and procedures.

NMC

ISI Flaw Disposition Worksheet

Site/Unit: NMC 1 PI2 | Procedure: ISI-UT-3 | Outage No.: PI2 RF2002
Summary No.: 502618 | Procedure Revision/FC: 9 1 | Report No.: 2002U010
Workscope: ISI | Work Order No.: 0106946 | Page: ____ of ____

1) Flaw Number 60° # 9
2) Item Number B-B B2.40
3) ISI Interval 3rd — OK Reviewer
4) Code Edition & Addenda 1989 No Addenda — OK Reviewer
5) Acceptance Standard IWB-3510 — OK Reviewer
6) Calculations (See Below) — OK Reviewer

FLAW IS SUBSURFACE
$l = 1.3''$ $t = 5.5''$
$a = .45''$ $S = 2.0''$
$a/l = \frac{.45''}{1.3''} = 0.35$
$a/t_{actual} \times 100\% = \frac{.45''}{5.5''} \times 100\% = 8.2\%$
$Y = S/a = \frac{2.0''}{.45''} = 4.4$
$\therefore Y = 1$
FROM TABLE IWB 3510-1
$a/t_{allowable}\ \% = 5.1Y = 5.1\%$

FLAW IS NOT ACCEPTABLE PER TABLE IWB 3510-1 CONTINUE FLAW ANALYSIS PER WCAP 14166-FLAW EVALUATION HANDBOOK.

7) Results — OK Reviewer
a/l = 0.35 Code allowable a/t% = 5.1 Calculated a/t% = 8.2 Laminar flaw surface area (0.75 l w) = N/A
8) Table used for analysis — OK Reviewer IWB 3510-1
9) Was linear interpolation used? ○ Yes ● No If no, why?
ON TABLE
10) Was IWA-3200 Significant Digits For Limiting Values followed? ● Yes ○ No If no, why?

11) The correct Code Edition and Addenda was available and used. ● Yes Preparer KJ — OK Reviewer
12) Statement of acceptability or rejectability with basis. — OK Reviewer — ● Accept ○ Reject
○ (a/t) Code allowable > (a/t) calculated
● OEM flaw evaluation handbook (see attached analysis)
● (a/t) Code allowable < (a/t) calculated

FLAW ACCEPTABLE BY WCAP-14166 Sec. A-2 Page A2-7

13) Prepared by and date Karen L. [illegible] 2-15-02
The results are correct and the methodology used is in accordance with applicable codes, standards, specifications and procedures.

14) Engineering review by and date [illegible] 2-15-2002
This review assures that the results are correct and the methodology used is in accordance with applicable codes, standards, specifications and procedures.

15) Approved by and date Monica [illegible] 2/10/02
This approval assures that all involved with this flaw sizing and flaw disposition were aware of the necessity that the results and the methodology are correct and in accordance with applicable codes, standards, specifications and procedures.

Outage No PI2 RF2002
Summary # 502618
WO # 0106946 FLAW IS SUBSURFACE
FLAW #60°#9

$\ell = 1.3''$ $t = 5.5''$
$a = .45''$ $S = 2.0''$

$\delta = S + a = 2.0'' + .45''$
$= 2.45''$

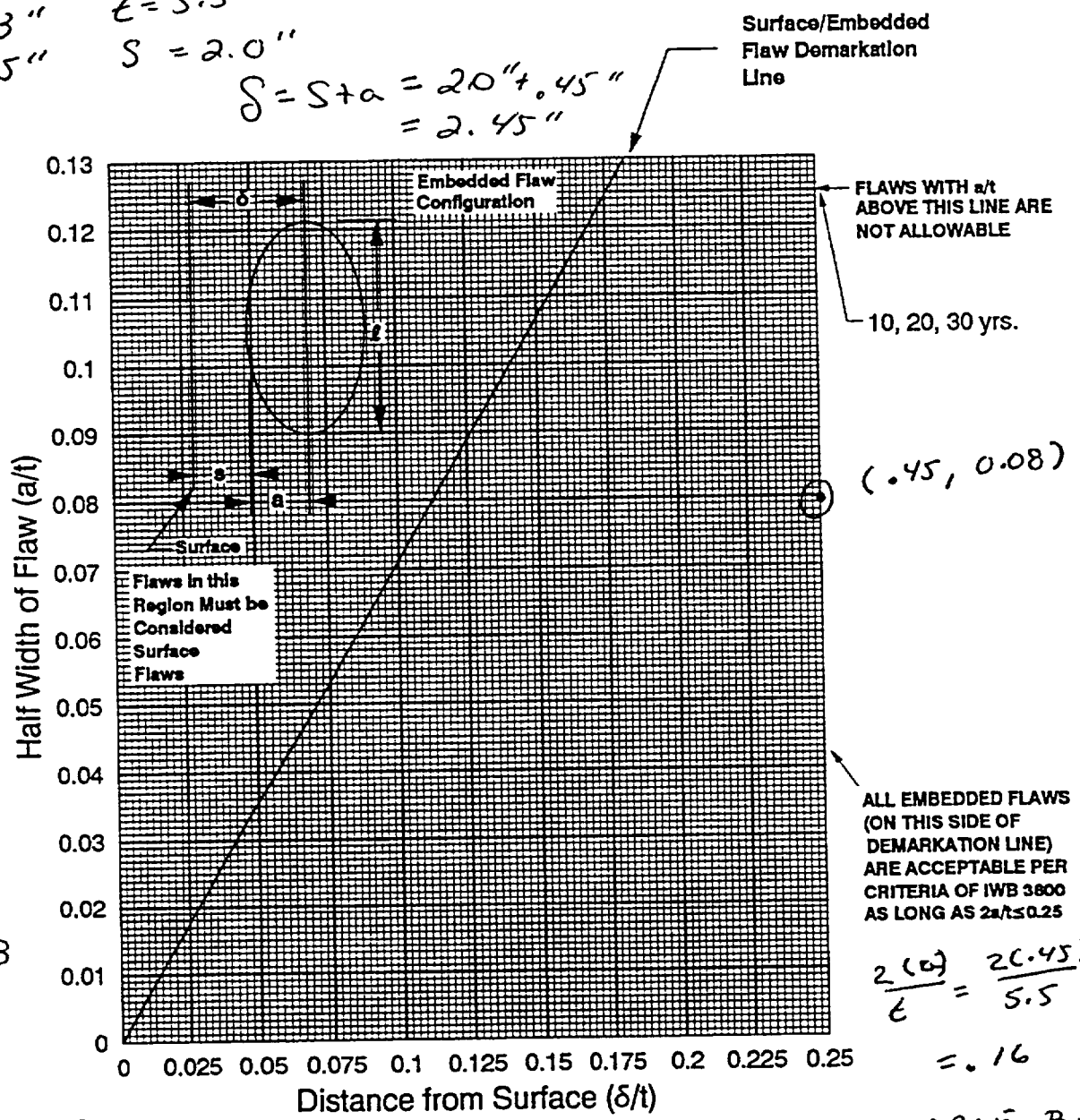

$a/t = \frac{.45}{5.5}$
$= 0.08$

$\frac{2(a)}{t} = \frac{2(.45)}{5.5}$
$= .16$

$\delta/t = \frac{2.45''}{5.50''} = .45$

FLAW IS ACCEPTABLE By analysis WCAP 14166 Sec A-2 Page A2-7

Figure A-2.4 Flaw Evaluation Chart for the Tubesheet-Channel Head Junction for Prairie Island Units 1 and 2

X	Inside Surface	___	Surface Flaw	X	Longitudinal Flaw
X	Outside Surface	X	Embedded Flaw	X	Circumferential Flaw

Prepared By: K [illegible] 2-15-02 DEW

Flaw Sizing Calculations Using Metal Path for Vessel Welds > 2"

For surface and subsurface single planar flaws oriented in plane normal to pressure retaining surface

ASME SECT XI 1989 W/ NO ADDENDA SPC INITIAL TO VERIFY

ISI Report # 2002U010 Evaluation Performed By: Sean Clay Date: 2/14/02
Flaw # 60°#9 Reviewed By: Jerry Wren Date: 2-14-02

Length
Length of the flaw "ℓ" is determined by finding the difference between L1 and L2 for perpendicular scans, W1 and W2 for parallel scans.
L and W values are from page 5 of the UT report.
ℓ = 365.8" (L2) - 364.5" (L1) = 1.30 inches.

Thickness
Thickness of the component at the location of the flaw, using UT or nom wall (circle one).
This value is from page 1 of the UT report.
"t" = 5.50 inches

Calibration
The measured angle in the calibration block was 63 degrees

Calculations using metal path From page 5 of the UT report, Scan # 2
The flaw exhibited 20% DAC at 5.660 and 7.570 inches MP. Max amplitude is 6.740 inches MP with the transducer exit point at 2.90 inches (W) from the centerline of the weld and 365.20 inches (L) from the 0" reference. (Use of 20% DAC vs. 50% max amp for indications > 100% DAC is conservative.)

1) Determine the upper depth of the flaw from the exam surface.
5.660 (metal path at 20% upper) * COS of the measured angle 63° = 2.570 inches depth.

2) Determine the lower depth of the flaw from the exam surface.
7.570 (metal path at 20% lower) * COS of the measured angle 63° = 3.437 inches depth.

3) Determine the depth of the flaw from the exam surface at the maximum amplitude point.
6.740 (metal path at maximum amplitude point) * COS of the measured angle 63° = 3.060 inches depth.

4) Determine the distance from the center line of the weld to the maximum amplitude point of the flaw.
6.740 (metal path at maximum amplitude point) squared = 45.428 (a^2)
3.060 (depth at maximum amplitude point) squared = 9.364 (b^2)
$\sqrt{a^2 - b^2}$ = 6.005 inches of surface distance to the flaw from the transducer exit point.
2.900 (Wmax) – 6.005 (surf dist) = -3.105 inches to the centerline of the weld.

5) Determine S by picking the smaller of the following;
S = 2.570 (result of 1) = distance between exam surface and the upper flaw tip
>> OR <<
S = 5.50 (part "t") – 3.437 (result of 2) = 2.063 distance between the side opposite exam surface and the lower flaw tip

6) Determine 2d in though wall thickness.
3.437 (from step 2) – 2.570 (from step 1) = .867 inches.

Determination of surface or subsurface
0.4d = (2d / 2) * 0.4 = .173
Compare to S (from step 5)
If S is less than 0.4d, the flaw is **surface**. a = 2d + S = N/A inches.
If S is greater than or equal to 0.4a the flaw is **sub-surface**. a = 2a / 2 = .433 inches.

ℓ = 1.3 (for a/ℓ > 0.5, ℓ = 2a) t = 5.5 (part thickness)
a = .45 (surf or sub sub, circle one) S = 2.0

103 121

ISI Flaw Sizing Worksheet

Site/Unit:	NMC / PI2	Procedure:	ISI-UT-3	Outage No.:	PI2RF2002
Summary No.:	502618	Procedure Revision/FC:	9 / —	Report No.:	2002U010
Workscope:	ISI	Work Order No.:	0106946	Page:	___ of ___

1) Flaw Number #10 60°
2) Item Number B2.40
3) ISI Interval 3rd Interval ⊗ OK Reviewer JPW
4) Code Edition & Addenda 89 no addenda ⊗ OK Reviewer JPW
5) Method UT
6) Flaw Sketch (See Below) ⊗ OK Reviewer JPW

Flaw View

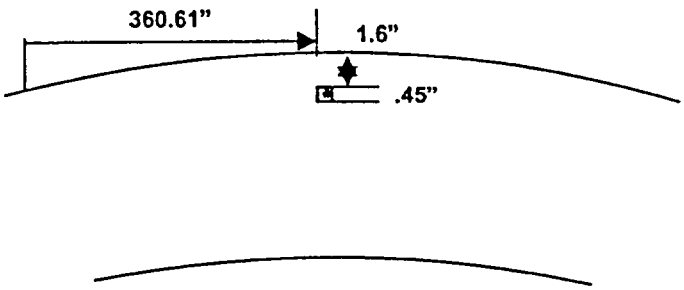

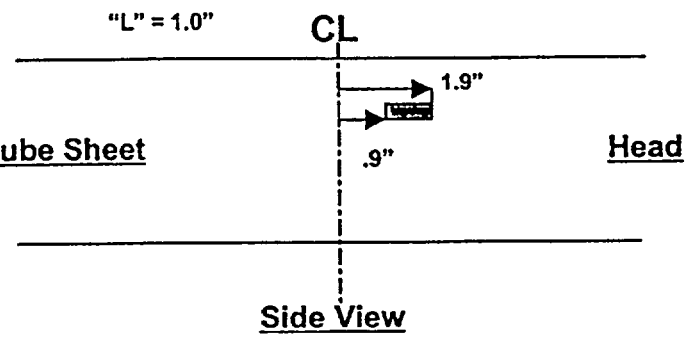

End View

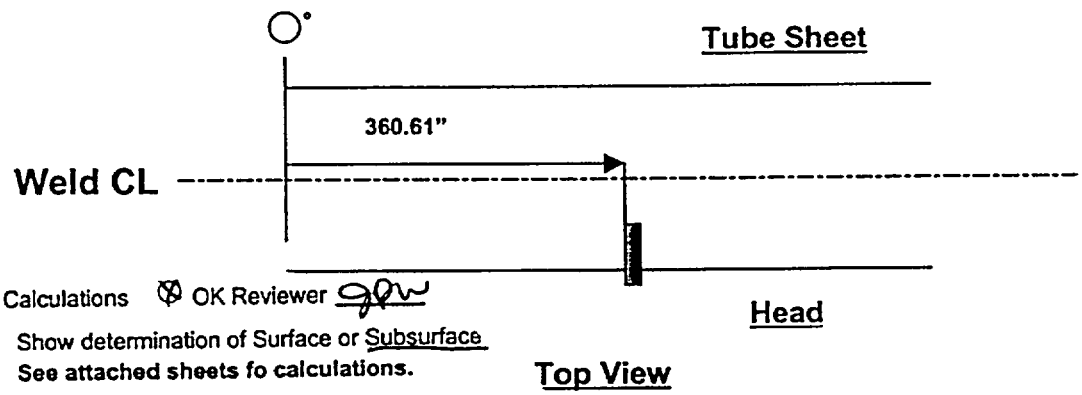

7) Calculations ⊗ OK Reviewer JPW

Show determination of Surface or Subsurface
See attached sheets fo calculations.

Show determination of type of "a" to use
See attached sheets fo calculations.

8) ISI-FE-1 Paragraph ~~7.0~~ 6.1 "Rounding-off Method" was used ⊙ Yes Preparer SPC ⊗ OK Reviewer JPW

9) Code Flaw Dimensions ⊗ OK Reviewer JPW
"l" = 1.0" "a" = .25" "t *nominal*" = N/A "t *measured*" = 5.5 "s" = 1.6" "w" = N/A

10) Flaw Type ⊗ OK Reviewer JPW Subsurface Planar (UT/RT)

11) Flaw Characterization Figure ⊗ OK Reviewer JPW IWA-3320-1

12) Flaw Characterization Figure Number FLAW # 1

13) Was IWA-3300 Flaw Characterization followed? ⊙ Yes ○ No If no, why?

14) The correct Code Edition and Addenda was available and used. ⊙ Yes Preparer SPC ⊗ OK Reviewer JPW

15) Prepared by and date SEAN P. CLAY 2-14-02
The results are correct and the methodology used is in accordance with applicable codes, standards, specifications and procedures.

16) Review by and date 2-18-02
The review assures that the results are correct and the methodology used is in accordance with applicable codes, standards, specifications and procedures.

ISI Flaw Disposition Worksheet

Site/Unit: NMC1 PS2 | Procedure: ISI-UT-3 | Outage No.: PF2RF2002
Summary No.: 502618 | Procedure Revision/FC: 9 / 1 | Report No.: 2002U010
Workscope: ISI | Work Order No.: 0106946 | Page: ____ of ____

1) Flaw Number 60° #10 | 3) ISI Interval 3rd | OK Reviewer DSW
2) Item Number B-B B2.40 | 4) Code Edition & Addenda 1989 No Addenda | OK Reviewer DSW
5) Acceptance Standard IWB-3510 | OK Reviewer DSW
6) Calculations (See Below) | OK Reviewer DSW

FLAW IS SUBSURFACE

$l = 1.0''$ $t = 5.5''$
$a = .25''$ $S = 1.6''$

$a/l = \frac{.25''}{1.0''} = .25''$

$a/t\ \%_{actual} \times 100\% = \frac{.25''}{5.5''} \times 100\% = 4.5\%$ $Y = S/a = \frac{1.6''}{.25''} = 6.4$

$\therefore Y = 1$

$a/t\ \%_{allowed} = 3.8Y = 3.8\%$ From TABLE IWB-3510-1

$a/t\ \%_{allow} = 3.8\%$ $a/t\ \%_{actual} = 4.5\%$

FLAW IS NOT ACCEPTABLE PER TABLE IWB-3510-1. CONTINUE FLAW ANALYSIS PER WCAP 14166 - FLAW EVALUATION HANDBOOK.

7) Results OK Reviewer DSW
a/l = .25'' Code allowable a/t% = 3.8% Calculated a/t% = 4.5% Laminar flaw surface area: (0.75 | w) = NA
8) Table used for analysis OK Reviewer DSW IWB-3510-1
9) Was linear interpolation used? ○ Yes ● No If no, why?
ON TABLE
10) Was IWA-3200 Significant Digits For Limiting Values followed? ● Yes ○ No If no, why?

11) The correct Code Edition and Addenda was available and used. ● Yes Preparer KSH OK Reviewer DSW
12) Statement of acceptability or rejectability with basis. OK Reviewer DSW ● Accept ○ Reject
○ (a/t) Code allowable > (a/t) calculated
● OEM flaw evaluation handbook (see attached analysis)
● (a/t) Code allowable < (a/t) calculated

FLAW ACCEPTABLE BY WCAP 14166 Sec A-2 Page A2-7

13) Prepared by and date
Ken Schell 2-15-02
The results are correct and the methodology used is in accordance with applicable codes, standards, specifications and procedures.

14) Engineering review by and date
Daniel A Whitset 2-15-2002
This review assures that the results are correct and the methodology used is in accordance with applicable codes, standards, specifications and procedures.

15) Approved by and date
Monica Vik 2/18/02
This approval assures that all involved with this flaw sizing and flaw disposition were aware of the necessity that the results and the methodology are correct and in accordance with applicable codes, standards, specifications and procedures.

Outage No PI2 RF2002
Summary # 502618 FLAW IS SUBSURFACE
WO # 0106946 106 121
FLAW # 60° #10
$\ell = 1.0''$ $t = 5.5''$
$a = 0.25''$ $S = 1.6''$

$\delta = S + a = 1.6'' + .25''$
$= 1.85''$

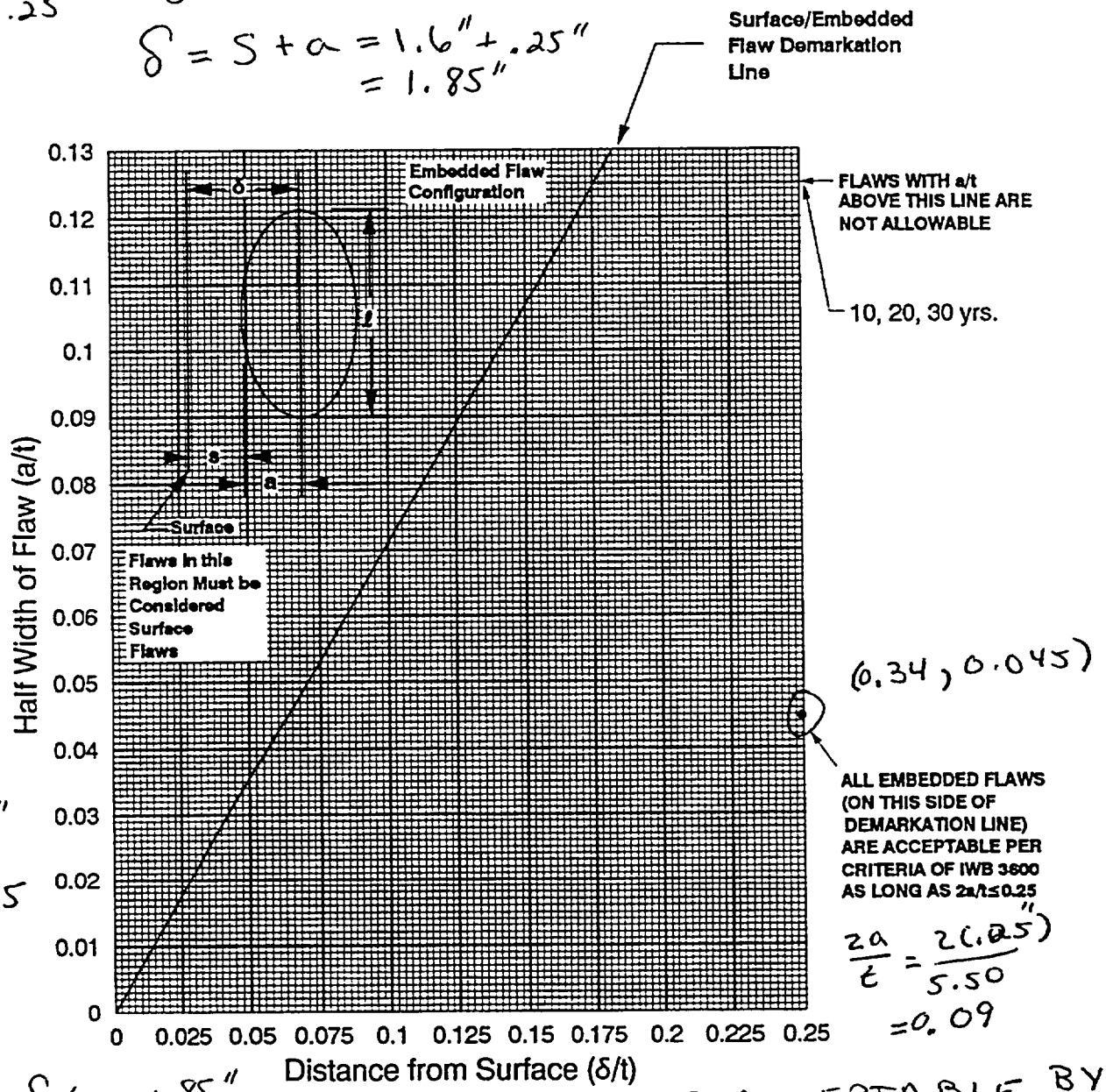

(0.34, 0.045)

$a/t = \frac{0.25''}{5.5''} = 0.045$

$\frac{2a}{t} = \frac{2(.25'')}{5.50} = 0.09$

$\delta/t = \frac{1.85''}{5.50''} = 0.34$

FLAW IS ACCEPTABLE BY ANALSIS WCAP 14166 Section A-2 Page A2-7

Figure A-2.4 Flaw Evaluation Chart for the Tubesheet-Channel Head Junction for Prairie Island Units 1 and 2

X	Inside Surface		Surface Flaw	X	Longitudinal Flaw
X	Outside Surface	X	Embedded Flaw	X	Circumferential Flaw

Prepared By: KSL 2/15/02 KSL

Flaw Sizing Calculations Using Metal Path for Vessel Welds > 2"

For surface and subsurface single planar flaws oriented in plane normal to pressure retaining surface

ASME SECT XI 1989 W/ NO ADDENDA SPC INITIAL TO VERIFY

ISI Report # 2002U010 Evaluation Performed By: S. Clay Date: 02/14/02
Flaw # 60°#10 Reviewed By: J. Wren Date: 2-14-02

Length
Length of the flaw "*l*" is determined by finding the difference between L1 and L2 for perpendicular scans, W1 and W2 for parallel scans.
L and W values are from page 5 of the UT report.
l = -0.9 (L2) - 1.9 (L1) = - 1.0" inches.

Thickness
Thickness of the component at the location of the flaw, using UT or nom wall (circle one).
This value is from page 1 of the UT report.
"t" = 5.50 inches

Calibration
The measured angle in the calibration block was 63° degrees

Calculations using metal path From page 5 of the UT report, Scan # 4
The flaw exhibited 20% DAC at 3.830 and 4.830 inches MP. Max amplitude is 4.250 inches MP with the transducer exit point at 1.3 inches from the centerline of the weld and 364.40 inches from the 0" reference. (Use of 20% DAC vs. 50% max amp for indications > 100% DAC is conservative.)

*) Determine correction factor due to curvature.
Radius = 67.94" (R). Surface distance to max amp point = 3.787" (C). C/R = .056 TAN.
INV TAN = 3.205 . COS = .998 . (R / COS) – R = .136 correction factor.

1) Determine the upper depth of the flaw from the exam surface.
3.830" (metal path at 20% upper) * COS of the measured angle 63° = 1.739" - .136 correction factor = 1.603 inches depth.

2) Determine the lower depth of the flaw from the exam surface.
4.830" (metal path at 20% lower) * COS of the measured angle 63° = 2.193" - .136" correction factor = 2.057 inches depth.

3) Determine the depth of the flaw from the exam surface at the maximum amplitude point.
4.250" (metal path at maximum amplitude point) * COS of the measured angle 63° = 1.929" - .136" correction factor = 1.793 inches depth.

4) Determine the distance from 0" reference to the maximum amplitude point of the flaw.
4.250" (metal path at maximum amplitude point) squared = 18.062 (a^2)
1.929" (depth at maximum amplitude point, before correction) squared = 3.721 (b^2)
$\sqrt{a^2 - b^2}$ = 3.787 inches of surface distance to the flaw from the transducer exit point.
364.40 (Lmax) + or – 3.787" (surf dist) = 360.613 inches from 0" reference.
(+ or – based on scan direction)

5) Determine S by picking the smaller of the following;
S = 1.603" (result of 1) = distance between exam surface and the upper flaw tip
>> OR <<
S = 5.50 (part "t") – 2.057 (result of 2) = 3.443" distance between the side opposite exam surface and the lower flaw tip

6) Determine 2d in though wall thickness.
2.057" (from step 2) – 1.603" (from step 1) = .454 inches.

Flaw Sizing Calculations Using Metal Path for Vessel Welds > 2"

For surface and subsurface single planar flaws oriented in plane normal to pressure retaining surface

Determination of surface or subsurface

0.4d = (2d / 2) * 0.4 = **.091"**

Compare to S (from step 5)

If S is less than 0.4d, the flaw is **surface**. a = 2d + S = **N/A** inches.

If S is greater than or equal to 0.4a the flaw is **sub-surface**. a = 2a / 2 = **.227** inches.

l = **1.0"** (for a/*l* > 0.5, *l* = 2a) t = **5.5"** (part thickness)

a = **.25"** (surf or sub surf, circle one) S = **1.6"**

108 . 121

109 121

ISI Flaw Sizing Worksheet

Site/Unit:	NMC / PI2	Procedure:	ISI-UT-3	Outage No.:	PI2RF2002
Summary No.:	502618	Procedure Revision/FC:	9 / ---	Report No.:	2002U010
Workscope:	ISI	Work Order No.:	0106946	Page:	___ of ___

1) Flaw Number #11 60°
2) Item Number B2.40
3) ISI Interval 3rd Interval ⊗ OK Reviewer
4) Code Edition & Addenda 89 no addenda ⊗ OK Reviewer
5) Method UT
6) Flaw Sketch (See Below) ⊗ OK Reviewer

Flaw View

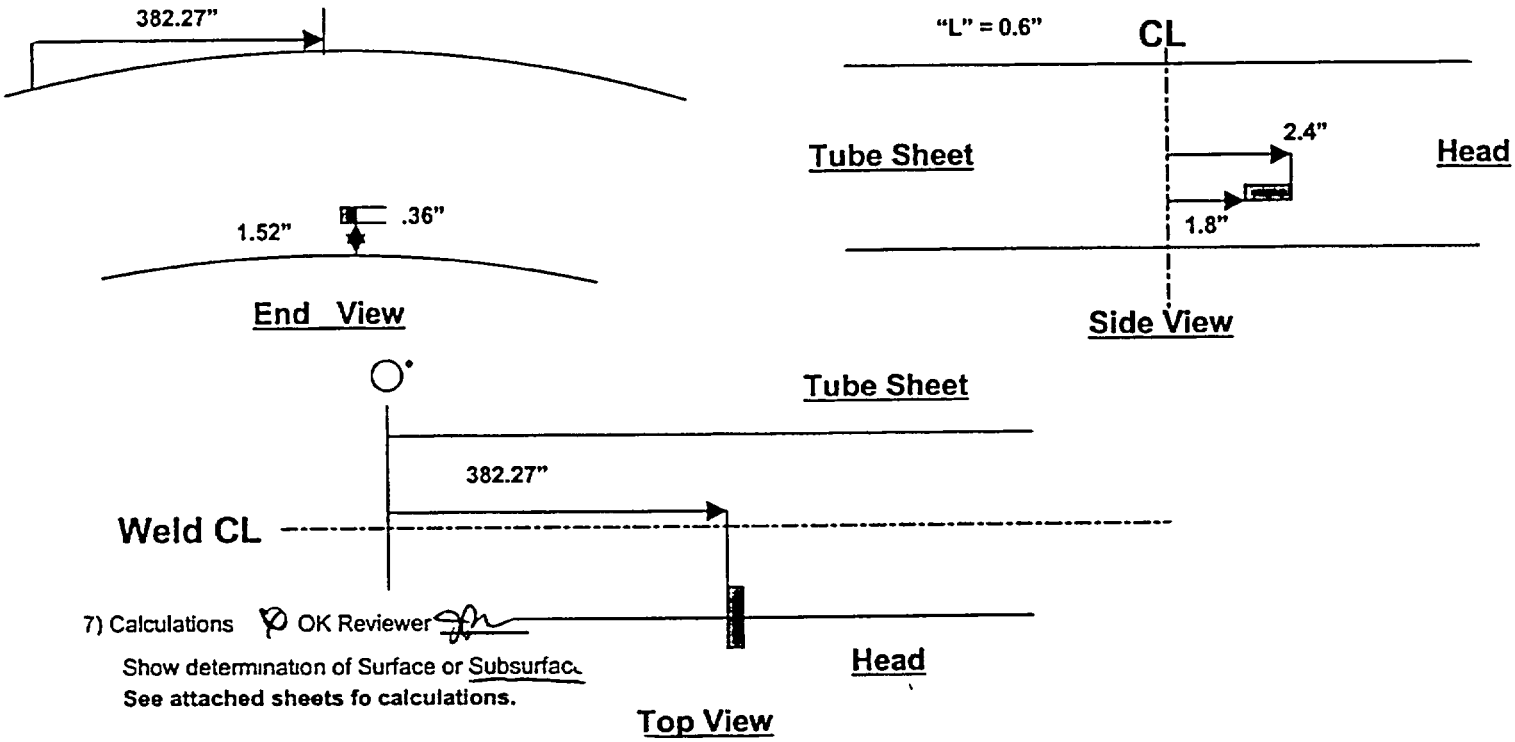

7) Calculations ⊗ OK Reviewer

Show determination of Surface or Subsurface
See attached sheets fo calculations.

Show determination of type of "a" to use
See attached sheets fo calculations.

8) ISI-FE-1 Paragraph 4.1 5.2 "Rounding-off Method" was used ⊙ Yes Preparer SPC ⊗ OK Reviewer SPW

9) Code Flaw Dimensions ⊗ OK Reviewer SPW

"l" = .60" "a" = .20" "t *nominal*" = N/A "t *measured*" = 5.5 "s" = 1.5" "w" = N/A

10) Flaw Type ⊗ OK Reviewer SPW Subsurface Planar (UT/RT)

11) Flaw Characterization Figure ⊗ OK Reviewer SPW IWA-3320-1

12) Flaw Characterization Figure Number FLAW #2

13) Was IWA-3300 Flaw Characterization followed? ⊙ Yes ○ No If no, why?

14) The correct Code Edition and Addenda was available and used. ⊙ Yes Preparer SPC ⊗ OK Reviewer SPW

15) Prepared by and date Sean P. Clay 2-14-02

The results are correct and the methodology used is in accordance with applicable codes, standards, specifications and procedures.

16) Review by and date Jerry P. Wh 2-19-02

The review assures that the results are correct and the methodology used is in accordance with applicable codes, standards, specifications and procedures.

NMC

ISI Flaw Disposition Worksheet

Site/Unit: NMC1 PI2 | Procedure: ISI-UT-3 | Outage No.: PI2 RF2002
Summary No.: 502618 | Procedure Revision/FC: 9 1 | Report No.: 20020010
Workscope: ISI | Work Order No.: 0106946 | Page: ___ of ___

1) Flaw Number #60° #11 | 3) ISI Interval: 3RD | OK Reviewer [illegible]
2) Item Number B-B B2.40 | 4) Code Edition & Addenda: 1989 No Addenda | OK Reviewer [illegible]
FLAW IS SUBSURFACE | 5) Acceptance Standard: IWB-3510 | OK Reviewer [illegible]
6) Calculations (See Below) | OK Reviewer [illegible]

$\ell = .60''$ $t = 5.5''$
$a = .20''$ $S = 1.5''$

$a/\ell = \frac{.20''}{.60''} = 0.33$ $a/t_{actual} \times 100\% = \frac{.20''}{5.5''} \times 100\% = 3.6\%$ $Y = S/a = \frac{1.5''}{.20''} = 7.5''$

$\therefore Y = 1''$

FROM TABLE IWB-3510-1

0.30	4.4Y	
0.33	X = a/t % allowed	
0.35	5.1Y	

$\frac{(0.33-0.30)}{(0.35-0.30)}(5.1Y-4.4Y) = X - 4.4Y$

$\frac{0.03}{0.05}(.7Y) + 4.4Y = X$

$4.82Y = a/t_{\%\ allowed} = 4.82\%$

7) Results OK Reviewer [illegible]
a/l = 0.33 Code allowable a/t% = 4.82% Calculated a/t% = 3.6% Laminar flaw surface area: (0.75 l w) = N/A
8) Table used for analysis OK Reviewer [illegible] IWB-3510-1
9) Was linear interpolation used? Yes No If no, why?

10) Was IWA-3200 Significant Digits For Limiting Values followed? Yes No If no, why?

11) The correct Code Edition and Addenda was available and used. Yes Preparer [illegible] OK Reviewer [illegible]
12) Statement of acceptability or rejectability with basis. OK Reviewer [illegible] Accept Reject
- (a/t) Code allowable > (a/t) calculated
- OEM flaw evaluation handbook (see attached analysis)
- (a/t) Code allowable < (a/t) calculated

13) Prepared by and date [illegible] 2-15-02
The results are correct and the methodology used is in accordance with applicable codes, standards, specifications and procedures.

14) Engineering review by and date [illegible] 2-15-2002
This review assures that the results are correct and the methodology used is in accordance with applicable codes, standards, specifications and procedures.

15) Approved by and date Monica [illegible] 2/18/02
This approval assures that all involved with this flaw sizing and flaw disposition were aware of the necessity that the results and the methodology are correct and in accordance with applicable codes, standards, specifications and procedures.

Flaw Sizing Calculations Using Metal Path for Vessel Welds > 2"

For surface and subsurface single planar flaws oriented in plane normal to pressure retaining surface

ASME SECT XI 1989 W/ NO ADDENDA SPC INITIAL TO VERIFY

ISI Report # 2002U010 Evaluation Performed By: S. Clay Date: 02/14/02
Flaw # 60°#11 Reviewed By: J. Wren Date: 2-14-02

Length
Length of the flaw "*l*" is determined by finding the difference between L1 and L2 for perpendicular scans, W1 and W2 for parallel scans.
L and W values are from page 5 of the UT report.
l = -1.8 (L2) - 2.4 (L1) = - 0.6" inches.

Thickness
Thickness of the component at the location of the flaw, using UT or nom wall (circle one).
This value is from page 1 of the UT report.
"t" = 5.50 inches

Calibration
The measured angle in the calibration block was 63° degrees

Calculations using metal path From page 5 of the UT report, Scan # 4
The flaw exhibited 20% DAC at 9.040 and 9.830 inches MP. Max amplitude is 9.240 inches MP with the transducer exit point at 2.2 inches from the centerline of the weld and 390.50 inches from the 0" reference. (Use of 20% DAC vs. 50% max amp for indications > 100% DAC is conservative.)

*) Determine correction factor due to curvature.
Radius = 67.94" (R). Surface distance to max amp point = 8.233" (C). C/R = .121 TAN.
INV TAN = 6.899 . COS = .993 . (R / COS) – R = .479 correction factor.

1) Determine the upper depth of the flaw from the exam surface.
9.040" (metal path at 20% upper) * COS of the measured angle 63° = 4.104" - .479" correction factor = 3.625 inches depth.

2) Determine the lower depth of the flaw from the exam surface.
9.830" (metal path at 20% lower) * COS of the measured angle 63° = 4.463" - .479" correction factor = 3.984 inches depth

3) Determine the depth of the flaw from the exam surface at the maximum amplitude point.
9.240" (metal path at maximum amplitude point) * COS of the measured angle 63° = 4.195" - .479" correction factor = 3.716 inches depth.

4) Determine the distance from 0" reference to the maximum amplitude point of the flaw.
9.240" (metal path at maximum amplitude point) squared = 85.378 (a^2)
4.195" (depth at maximum amplitude point, before correction) squared = 17.598 (b^2)
$\sqrt{a^2 - b^2}$ = 8.233 inches of surface distance to the flaw from the transducer exit point.
390.50 (Lmax) + or – 8.233" (surf dist) = 382.267 inches from 0" reference.
(+ or – based on scan direction)

5) Determine S by picking the smaller of the following;
S = 3.625" (result of 1) = distance between exam surface and the upper flaw tip
>> OR <<
S = 5.50 (part "t") – 3.984 (result of 2) = 1.516" distance between the side opposite exam surface and the lower flaw tip

6) Determine 2d in though wall thickness.
3.984" (from step 2) – 3.625" (from step 1) = .359 inches.

111 121

Flaw Sizing Calculations Using Metal Path for Vessel Welds > 2"

For surface and subsurface single planar flaws oriented in plane normal to pressure retaining surface

Determination of surface or subsurface

0.4d = (2d / 2) * 0.4 = .072"

Compare to S (from step 5)

If S is less than 0.4d, the flaw is **surface**. a = 2d + S = N/A inches.

If S is greater than or equal to 0.4a the flaw is **sub-surface**. a = 2a / 2 = .179 inches.

l = .60" (for a/l > 0.5, l = 2a) t = 5.5" (part thickness)

a = .20" (surf or sub surf, circle one) S = 1.5"

113 121

ISI Flaw Sizing Worksheet

Site/Unit:	NMC / PI2	Procedure:	ISI-UT-3	Outage No.:	PI2RF2002
Summary No.:	502618	Procedure Revision/FC:	9 / —	Report No.:	2002U010
Workscope:	ISI	Work Order No.:	0106946	Page:	___ of ___

1) Flaw Number #12 60°
2) Item Number B2.40
3) ISI Interval 3rd Interval — OK Reviewer
4) Code Edition & Addenda 89 no addenda — OK Reviewer
5) Method UT
6) Flaw Sketch (See Below) — OK Reviewer

Flaw View

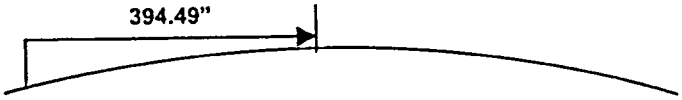

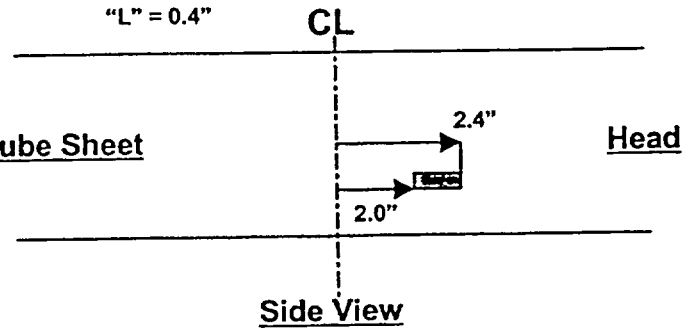

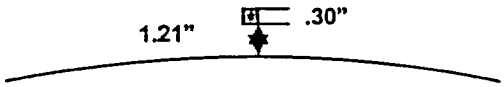

End View

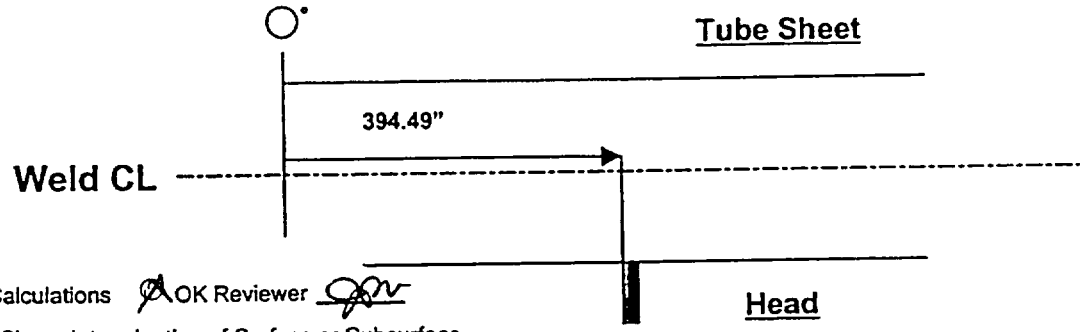

Top View

7) Calculations — OK Reviewer

Show determination of Surface or Subsurface
See attached sheets fo calculations.

Show determination of type of "a" to use
See attached sheets fo calculations.

8) ISI-FE-1 Paragraph ~~7.0~~ 6.1 SPC - "Rounding-off Method" was used — Yes Preparer SPC — OK Reviewer

9) Code Flaw Dimensions — OK Reviewer

"l" = .40" "a" = .15" "t *nominal*" = N/A "t *measured*" = 5.5 "s" = 1.2" "w" = N/A

10) Flaw Type — OK Reviewer — Subsurface Planar (UT/RT)

11) Flaw Characterization Figure — OK Reviewer — IWA-3320-1

12) Flaw Characterization Figure Number FLAW # 2

13) Was IWA-3300 Flaw Characterization followed? Yes No If no, why?

14) The correct Code Edition and Addenda was available and used. Yes Preparer SPC — OK Reviewer

15) Prepared by and date Sean P. Clay 2-14-02

The results are correct and the methodology used is in accordance with applicable codes, standards, specifications and procedures.

16) Review by and date 2-19-02

The review assures that the results are correct and the methodology used is in accordance with applicable codes, standards, specifications and procedures.

NMC

ISI Flaw Disposition Worksheet

Site/Unit: NMC 1 PI2 | Procedure: ISI-UT-3 | Outage No.: PI2RF2002
Summary No.: 502618 | Procedure Revision/FC: 9 1 | Report No.: 20024010
Workscope: ISI | Work Order No.: 0106946 | Page: ____ of ____

1) Flaw Number 60° #12 | 3) ISI Interval 3rd | OK Reviewer DSW
2) Item Number B-B B2.40 | 4) Code Edition & Addenda 1989 No Addenda | OK Reviewer DSW
5) Acceptance Standard IWB-3570 | OK Reviewer DSW
6) Calculations (See Below) | OK Reviewer DSW

FLAW IS SUBSURFACE

$l = .40''$ $t = 5.5''$
$a = .15''$ $S = 1.2''$

$a/t_{actual} \times 100\% = \frac{.15''}{5.5''} \times 100\% = 2.7\%$

$Y = S/a = \frac{1.2''}{.15''} = 8$
$\therefore Y = 1$

$a/l = \frac{.15''}{.40''} = .38$

FROM TABLE IWB-3510-1

0.35	5.1Y
0.38	X
0.40	5.8Y

$\frac{(0.38-0.35)}{(0.40-0.35)}(5.8Y-5.1Y) = X - 5.1Y$

$\frac{(0.03)}{(0.05)}(0.7Y) + 5.1Y = X = a/t\ \%\ allowed$

$5.52\% = a/t\ \%\ allowed$

7) Results OK Reviewer DSW
a/l = .38 Code allowable a/t% = 5.52% Calculated a/t% = 2.7% Laminar flaw surface area: (0.75 l w) = N/A
8) Table used for analysis OK Reviewer DSW IWB-3510-1
9) Was linear interpolation used? Yes No If no, why?

10) Was IWA-3200 Significant Digits For Limiting Values followed? Yes No If no, why?

11) The correct Code Edition and Addenda was available and used. Yes Preparer KJL OK Reviewer DSW
12) Statement of acceptability or rejectability with basis. OK Reviewer DSW Accept Reject
- (a/t) Code allowable > (a/t) calculated
- OEM flaw evaluation handbook (see attached analysis)
- (a/t) Code allowable < (a/t) calculated

13) Prepared by and date Karen LeGault 2-15-02
The results are correct and the methodology used is in accordance with applicable codes, standards, specifications and procedures.

14) Engineering review by and date Daniel Southwick 2-15-2002
This review assures that the results are correct and the methodology used is in accordance with applicable codes, standards, specifications and procedures.

15) Approved by and date Monica Vik 2/18/02
This approval assures that all involved with this flaw sizing and flaw disposition were aware of the necessity that the results and the methodology are correct and in accordance with applicable codes, standards, specifications and procedures.

Flaw Sizing Calculations Using Metal Path for Vessel Welds > 2"

For surface and subsurface single planar flaws oriented in plane normal to pressure retaining surface

ASME SECT XI 1989 W/ NO ADDENDA SPC INITIAL TO VERIFY

ISI Report # 2002U010 Evaluation Performed By: S. Clay Date: 02/14/02
Flaw # 60°#12 Reviewed By: J. Wren Date: 2-14-02

Length

Length of the flaw "*l*" is determined by finding the difference between L1 and L2 for perpendicular scans, W1 and W2 for parallel scans.
L and W values are from page 5 of the UT report.
l = -2.0 (L2) - 2.4 (L1) = - 0.4" inches.

Thickness

Thickness of the component at the location of the flaw, using UT or nom wall (circle one).
This value is from page 1 of the UT report.
"t" = 5.50 inches

Calibration

The measured angle in the calibration block was 63° degrees

Calculations using metal path From page 5 of the UT report, Scan # 3

The flaw exhibited 20% DAC at 10.310 and 10.970 inches MP. Max amplitude is 10.650 inches MP with the transducer exit point at 2.2 inches from the centerline of the weld and 385.00 inches from the 0" reference. (Use of 20% DAC vs. 50% max amp for indications > 100% DAC is conservative.)

*) Determine correction factor due to curvature.
Radius = 67.94" (R). Surface distance to max amp point = 9.489" (C). C/R = .140 TAN.
INV TAN = 7.970 . COS = .990 . (R / COS) – R = .686 correction factor.

1) Determine the upper depth of the flaw from the exam surface.
10.310" (metal path at 20% upper) * COS of the measured angle 63° = 4.681" - .686" correction factor = 3.995 inches depth.

2) Determine the lower depth of the flaw from the exam surface.
10.970" (metal path at 20% lower) * COS of the measured angle 63° = 4.980" - .686" correction factor = 4.294 inches depth.

3) Determine the depth of the flaw from the exam surface at the maximum amplitude point.
10.650" (metal path at maximum amplitude point) * COS of the measured angle 63° = 4.835" - .686" correction factor = 4.149 inches depth.

4) Determine the distance from 0" reference to the maximum amplitude point of the flaw.
10.650" (metal path at maximum amplitude point) squared = 113.422 (a^2)
4.835" (depth at maximum amplitude point, before correction) squared = 23.377 (b^2)
$\sqrt{a^2 - b^2}$ = 9.489 inches of surface distance to the flaw from the transducer exit point.
385.00 (Lmax) + or – 9.489" (surf dist) = 394.489 inches from 0" reference.
(+ or – based on scan direction)

5) Determine S by picking the smaller of the following;
S = 3.995" (result of 1) = distance between exam surface and the upper flaw tip
>> OR <<
S = 5.50 (part "t") – 4.294 (result of 2) = 1.206" distance between the side opposite exam surface and the lower flaw tip

6) Determine 2d in though wall thickness.
4.294" (from step 2) – 3.995" (from step 1) = .299 inches.

Flaw Sizing Calculations Using Metal Path for Vessel Welds > 2"

For surface and subsurface single planar flaws oriented in plane normal to pressure retaining surface

Determination of surface or subsurface

0.4d = (2d / 2) * 0.4 = .060"

Compare to S (from step 5)

If S is less than 0.4d, the flaw is **surface**. a = 2d + S = N/A inches.

If S is greater than or equal to 0.4a the flaw is **sub-surface**. a = 2a / 2 = .149 inches.

l = .40" (for a/l > 0.5, l = 2a) t = 5.5" (part thickness)

a = .15" (surf or sub surf, circle one) S = 1.2"

116 121

117 121

ISI Flaw Sizing Worksheet

Site/Unit:	NMC / PI2	Procedure:	ISI-UT-3	Outage No.:	PI2RF2002
Summary No.:	502618	Procedure Revision/FC:	9 / ---	Report No.:	2002U010
Workscope:	ISI	Work Order No.:	0106946	Page:	___ of ___

1) Flaw Number #13 60°
2) Item Number B2.40
3) ISI Interval 3rd Interval — OK Reviewer
4) Code Edition & Addenda 89 no addenda — OK Reviewer
5) Method UT
6) Flaw Sketch (See Below) — OK Reviewer

Flaw View

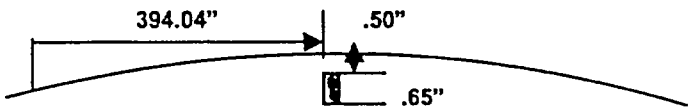

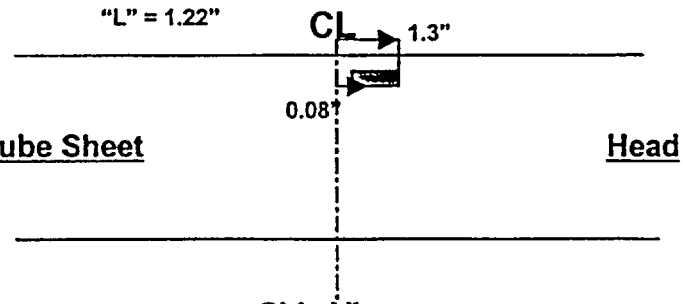

End View

Side View

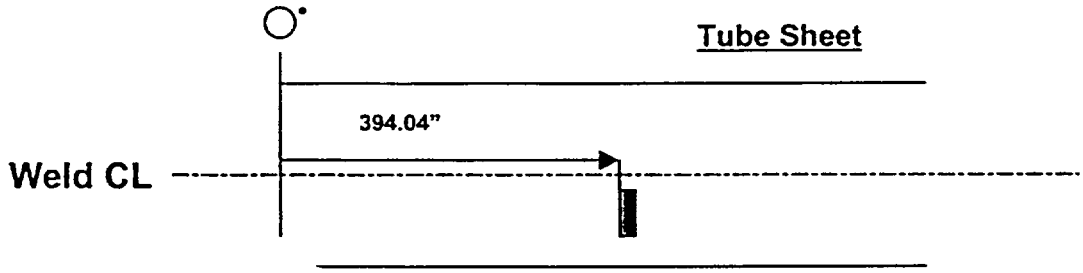

Top View

7) Calculations — OK Reviewer

Show determination of Surface or Subsurface
See attached sheets fo calculations.

Show determination of type of "a" to use
See attached sheets fo calculations.

8) ISI-FE-1 Paragraph 6.1 SPC - "Rounding-off Method" was used — Yes Preparer SPC — OK Reviewer
9) Code Flaw Dimensions — OK Reviewer
"l" = 1.2" "a" = .30" "t *nominal*" = N/A "t *measured*" = 5.5 "s" = .45" "w" = N/A
10) Flaw Type — OK Reviewer — Subsurface Planar (UT/RT)
11) Flaw Characterization Figure — OK Reviewer — IWA-3320-1
12) Flaw Characterization Figure Number FLAW #1
13) Was IWA-3300 Flaw Characterization followed? Yes No If no, why?

14) The correct Code Edition and Addenda was available and used. Yes Preparer SPC — OK Reviewer

15) Prepared by and date SEAN P. CLAY 2-14-02

The results are correct and the methodology used is in accordance with applicable codes, standards, specifications and procedures.

16) Review by and date 2-19-02

The review assures that the results are correct and the methodology used is in accordance with applicable codes, standards, specifications and procedures.

NMC

ISI Flaw Disposition Worksheet

Site/Unit: NMC1 PI2 | Procedure: ISI-UT-3 | Outage No.: PI2RF2002
Summary No.: 502618 | Procedure Revision/FC: 9 1 | Report No.: 2002U010
Workscope: ISI | Work Order No.: 0106946 | Page: ___ of ___

1) Flaw Number 60° #13 | 3) ISI Interval 3 Rd | OK Reviewer DW
2) Item Number B-B B2.40 | 4) Code Edition & Addenda 1989 No Addenda | OK Reviewer DW
FLAW IS SUBSURFACE | 5) Acceptance Standard IWB-3510 | OK Reviewer DW
6) Calculations (See Below) | OK Reviewer DW

$l = 1.2''$ $t = 5.5''$
$a = .30''$ $S = .45''$
$a/l = \frac{.30''}{1.2''} = 0.25$

$a/t \times 100\% = \frac{.30''}{5.5''} \times 100\% = 5.5\%$ actual

$Y = S/a = \frac{.45''}{.30''} = 1.5$
$\therefore Y = 1$

FROM TABLE IWB-3510-1 $a/t_{allowed}\% = 3.8Y$
$= 3.8\%$

$a/t_{allow} = 3.8\%$ $a/t_{actual}\% = 5.5$

FLAW IS NOT ACCEPTABLE PER TABLE IWB-3510-1. CONTINUE FLAW ANALYSIS PER WCAP 14166 - FLAW EVALUATION HANDBOOK.

7) Results OK Reviewer DW
a/l = 0.25 Code allowable a/t% = 3.8% Calculated a/t% = 5.5% Laminar flaw surface area: (0.75 | w) = N/A
8) Table used for analysis OK Reviewer DW IWB-3510-1
9) Was linear interpolation used? ○ Yes ● No If no, why?
ON TABLE
10) Was IWA-3200 Significant Digits For Limiting Values followed? ● Yes ○ No If no, why?

11) The correct Code Edition and Addenda was available and used. ● Yes Preparer KSL OK Reviewer DW
12) Statement of acceptability or rejectability with basis. OK Reviewer DW ● Accept ○ Reject
○ (a/t) Code allowable > (a/t) calculated
● OEM flaw evaluation handbook (see attached analysis)
● (a/t) Code allowable < (a/t) calculated

FLAW ACCEPTABLE BY WCAP 14166 Sec A-2 Page A2-7.

13) Prepared by and date Karen Schlicht 2-15-02
The results are correct and the methodology used is in accordance with applicable codes, standards, specifications and procedures.

14) Engineering review by and date [illegible] 2-19-2002
This review assures that the results are correct and the methodology used is in accordance with applicable codes, standards, specifications and procedures.

15) Approved by and date Monica [illegible] 2/18/02
This approval assures that all involved with this flaw sizing and flaw disposition were aware of the necessity that the results and the methodology are correct and in accordance with applicable codes, standards, specifications and procedures.

OUTAGE NO. PI2RF2002
SUMMARY # 502618
WO # 0106946
FLAW # 60° # 13

FLAW IS SUBSURFACE

119 . 121

a = 0.30" s = 0.45"
ℓ = 1.2" t = 5.5"

δ = s + a = 0.45" + 0.30"
= 0.75"

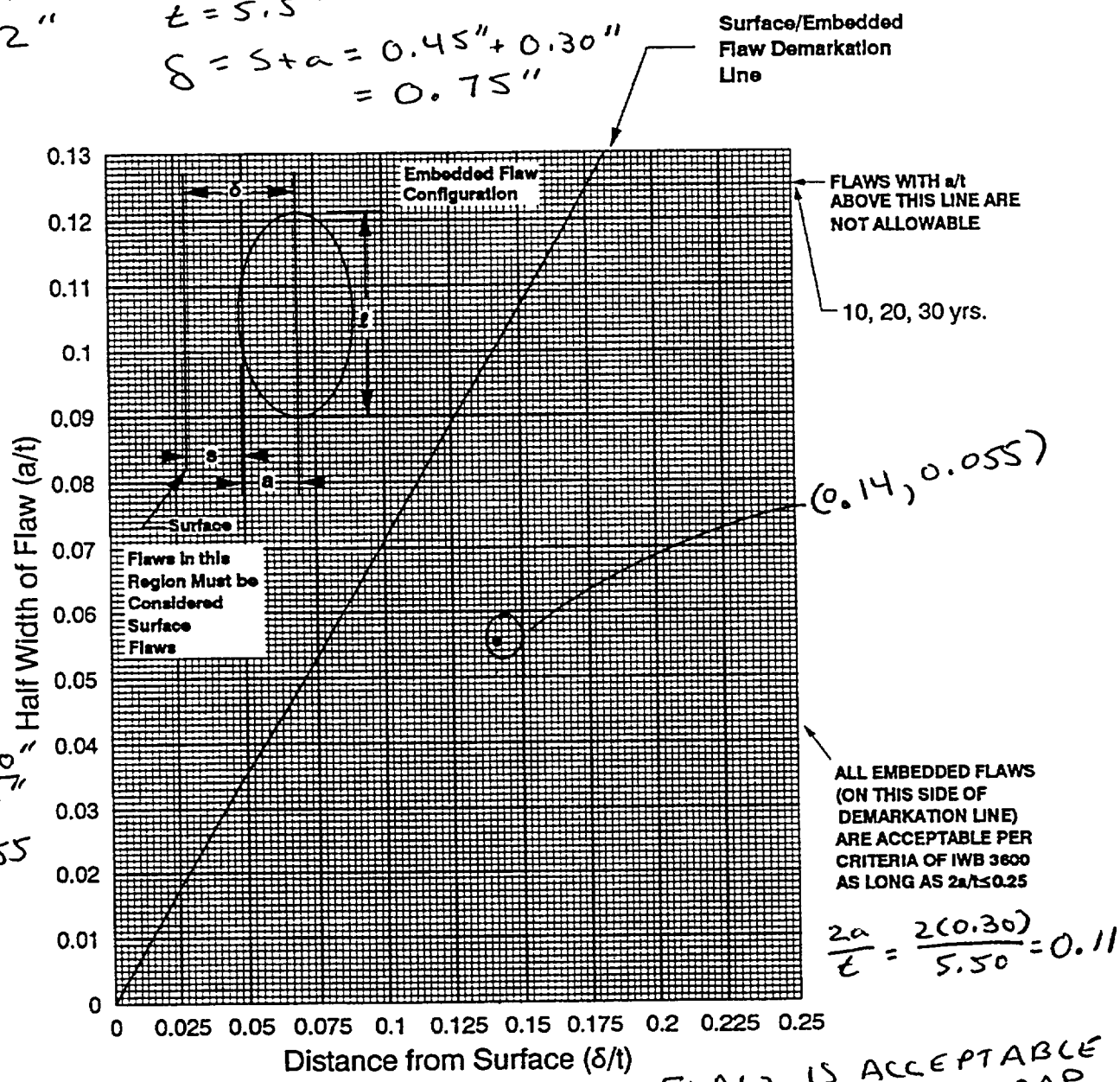

$a/t = \frac{0.30''}{5.50''} = 0.055$

$\frac{2a}{t} = \frac{2(0.30)}{5.50} = 0.11$

$\delta/t = \frac{0.75''}{5.50''} = 0.14$

FLAW IS ACCEPTABLE BY ANALYSIS WCAP 14166 Sec. A-2 Page A2-7

Figure A-2.4 Flaw Evaluation Chart for the Tubesheet-Channel Head Junction for Prairie Island Units 1 and 2

X	Inside Surface	___	Surface Flaw	X	Longitudinal Flaw
X	Outside Surface	X	Embedded Flaw	X	Circumferential Flaw

Prepared By: [illegible] 2-15-02 DEW

Flaw Sizing Calculations Using Metal Path for Vessel Welds > 2"

For surface and subsurface single planar flaws oriented in plane normal to pressure retaining surface

ASME SECT XI 1989 W/ NO ADDENDA SPC INITIAL TO VERIFY

ISI Report # 2002U010 Evaluation Performed By: S. Clay Date: 02/14/02
Flaw # 60°#13 Reviewed By: J. Wren Date: 2-4-02
LVIII

Length
Length of the flaw "ℓ" is determined by finding the difference between L1 and L2 for perpendicular scans, W1 and W2 for parallel scans.
L and W values are from page 5 of the UT report.
ℓ = - 0.08 (L2) - 1.3 (L1) = - 1.22" inches.

Thickness
Thickness of the component at the location of the flaw, using UT or nom wall (circle one).
This value is from page 1 of the UT report.
"t" = 5.50 inches

Calibration
The measured angle in the calibration block was 63° degrees

Calculations using metal path From page 5 of the UT report, Scan # 4
The flaw exhibited 20% DAC at .990 and 2.410 inches MP. Max amplitude is 1.750 inches MP with the transducer exit point at 1.1 inches from the centerline of the weld and 395.60 inches from the 0" reference. (Use of 20% DAC vs. 50% max amp for indications > 100% DAC is conservative.)

*) Determine correction factor due to curvature.
Radius = 67.94" (R). Surface distance to max amp point = 1.559" (C). C/R = .023 TAN.
INV TAN = 1.318 . COS = 1.000 . (R / COS) – R = .000 correction factor.

1) Determine the upper depth of the flaw from the exam surface.
0.990" (metal path at 20% upper) * COS of the measured angle 63° = 0.449" - .000" correction factor = 0.449 inches depth.

2) Determine the lower depth of the flaw from the exam surface.
2.410" (metal path at 20% lower) * COS of the measured angle 63° = 1.094" - .000" correction factor = 1.094 inches depth.

3) Determine the depth of the flaw from the exam surface at the maximum amplitude point.
1.750" (metal path at maximum amplitude point) * COS of the measured angle 63° = 0.794" - .000" correction factor = 0.794 inches depth.

4) Determine the distance from 0" reference to the maximum amplitude point of the flaw.
1.750" (metal path at maximum amplitude point) squared = 3.062 (a^2)
0.794" (depth at maximum amplitude point, before correction) squared = .630 (b^2)
$\sqrt{a^2 - b^2}$ = 1.559 inches of surface distance to the flaw from the transducer exit point.
395.60 (Lmax) + or – 1.559" (surf dist) = 394.041 inches from 0" reference.
(+ or – based on scan direction)

5) Determine S by picking the smaller of the following;
S = 0.449" (result of 1) = distance between exam surface and the upper flaw tip
>> OR <<
S = 5.50 (part "t") – 1.094 (result of 2) = 4.406" distance between the side opposite exam surface and the lower flaw tip

6) Determine 2d in though wall thickness.
1.094" (from step 2) – 0.449" (from step 1) = .645 inches.

120 - 121

Flaw Sizing Calculations Using Metal Path for Vessel Welds > 2"

For surface and subsurface single planar flaws oriented in plane normal to pressure retaining surface

Determination of surface or subsurface

0.4d = (2d / 2) * 0.4 = **.129"**

Compare to S (from step 5)

If S is less than 0.4d, the flaw is **surface**. a = 2d + S = **N/A** inches.

If S is greater than or equal to 0.4a the flaw is **sub-surface**. a = 2a / 2 = **.322** inches.

l = **1.2"** (for a/l > 0.5, l = 2a) t = **5.5"** (part thickness)

a = **.30"** (surf or sub surf, circle one) S = **.45"**

121 121

ATTACHMENT 2

NUCLEAR MANAGEMENT COMPANY, LLC
PRAIRIE ISLAND NUCLEAR GENERATING PLANT, UNIT 2
DOCKET NO. 50-306 LICENSE NO. DPR-60

LETTER NO. L-PI-03-030

UT Vessel Examination, Outage No: PI2RF2002, Report No: 2002U021

10 pages follow

UT Vessel Examination

Site/Unit: NMC / PI2
Procedure: ISI-UT-3
Outage No.: PI2RF2002
Summary No.: 501558
Procedure Revision/FC: 9 / ---
Report No.: 2002U021
Workscope: ISI
Work Order No.: 0106946
Page: 1 of ~~7~~ 10 2-21-02

Code: 1989
Code Cat: B-B
Location: Containment
Drawing No.: 2-ISI-36
Description: Bottom Head to Shell
System ID: RC
Component ID: W-3
Size/Length: 2.5" / 24'
Thickness/Diameter: 5.585" / 7' 6"
Limitations: See Comments.
Start Time: 1300
Finish Time: 1642

Examination Surface: Inside ☐ Outside ☑
Surface Condition: Ground Flush
Lo Location: Centerline of Manway
Wo Location: Centerline of Weld
Couplant: Sonotrace 40
Batch No.: #00143
Temp. Tool Mfg.: Telatemp
Serial No.: NSP 178
Surface Temp.: 90 °F
Cal. Sheet No.: 2002CA037, 2002CA038, 2002CA039

Angle Used	0	45	45T	60	60T	
Scanning dB	37.0	52.0	52.0	62.5	62.5	

Indication(s): Yes ☑ No ☐
Scan Coverage: Upstream ☑ Downstream ☑ CW ☑ CCW ☑

Comments

2.5" x 2.5" Pads at 18' 3" to 18' 2.8". Two (2) 1" instrumentation lines at 17' 10.5" and 20' 1.3". - See attached 45 degree data for ID Geometry.

EXAMINED 16' to 24'

Results: NAD ☐ IND ☑ GEO ☑ BAK 2/12/02

Percent Of Coverage Obtained > 90%: Yes
Reviewed Previous Data: Yes

Examiner Knott, Brian	Level II	Signature Brian D. Knott	Date 2/10/2002	Reviewer Clay, Sean P.	Signature L. III	Date 2-13-02
Examiner Thomas, Travis	Level II	Signature	Date 2/10/2002	Site Review Wren, Jerry P.	Signature	Date 2-21-02
Other N/A	Level N/A	Signature	Date	ANII Review Clow, Ron	Signature	Date 2/21/02

Supplemental Report

Report No.: 2002U021

Page: 2 of ~~7~~ 10 2-21-02

Summary No.: 501558

Examiner:	Knott, Brian	Level:	II	Reviewer:	Clay, Sean P.	Date:	2-13-02
Examiner:	Thomas, Travis	Level:	II	Site Review:	Wren, Jerry P.	Date:	2-21-02
Other:	N/A	Level:	N/A	ANII Review:	Clow, Ron	Date:	2/21/02

Comments: None

Sketch or Photo: G:\IDDEAL50\PI2RFO2002\SUPPLEMENTAL UT\2002u021_1 bmp

PRESSURIZER
WELD # W-3 INDICATION PLOT SHEET

60° 1/4 T BEAM SPREADS

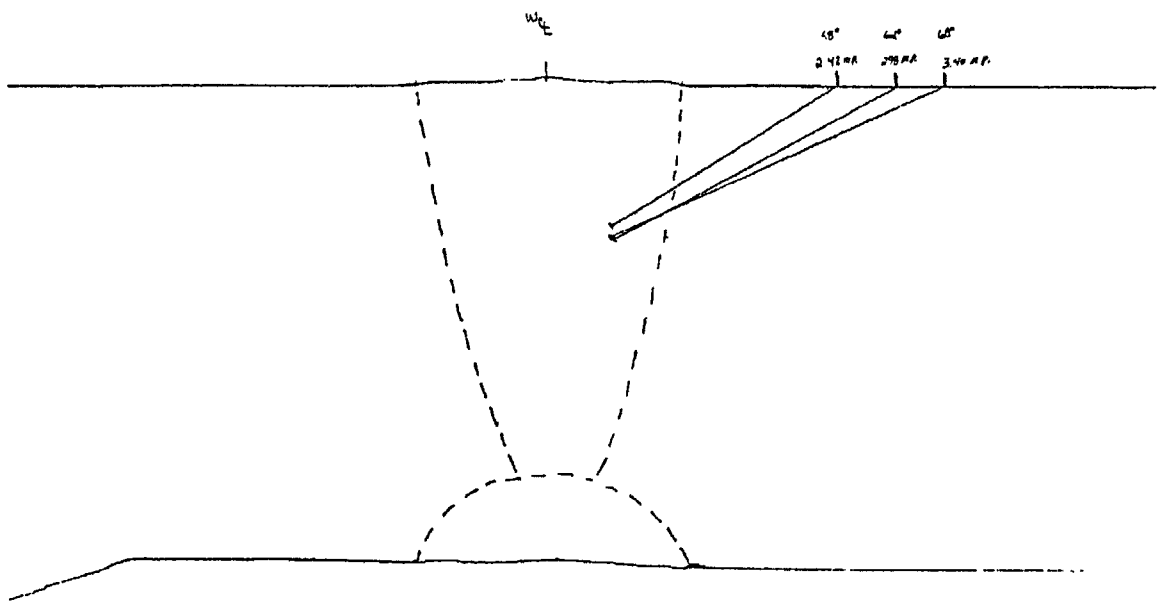

Ultrasonic Indication Report

Site/Unit:	NMC / PI2	Procedure:	ISI-UT-3	Outage No :	PI2RF2002
Summary No.:	501558	Procedure Revision/FC:	9 / —	Report No.:	2002U021
Workscope:	ISI	Work Order No.:	0106946	Page:	3 of 710

Search Unit Angle: 45 & 60 °

Wo Location: Centerline of Weld

Lo Location: Centerline of Manway

- ○ Piping Welds
- ◉ Ferritic Vessels ≥ 2"T
- ○ Other N/A

MP	Metal Path	Wmax	Distance From Wo To S U. At Maximum Response
RBR	Remaining Back Reflection	W1	Distance From Wo At Of Max (Forward)
L	Distance From Datum	W2	Distance From Wo At Of Max (Forward)

Comments: None

Scan #	Indication No	% Of DAC	W Max W	W Max MP	Forward Of Max W1	Forward Of Max MP	Backward Of Max W2	Backward Of Max MP	L1 Of Max	L Max	L2 Of Max	RBR Amp	Remarks
2	1	40%	4.08	6.165	3.8	6.033	4.5	6.449	17.05	171.1	171.8		45 Degree - ID geometry intermittently from 16' to 24'
													at varying lower amplitudes.
2	1	30%	3.25	2.981	2.7	2.426	3.7	3.4	270.2	270.6	271.0		60 Degree - See attached indication plot sheet.

Examiner Level II Knott, Brian	Signature Brian A. Knott	Date 2/10/2002	Reviewer Clay, Sean P. / L.III
Signature 2-13-02	Date		
Examiner Level II Thomas, Travis	Signature Travis Thomas	Date 2/10/2002	Site Review Wren, Jerry P.
Signature Jerry P. Wren	Date 2-21-02		
Other Level N/A N/A	Signature	Date	ANII Review Clow, Ron
Signature	Date 2/21/02		

Determination of Percent Coverage for UT Examinations - Vessels

Site/Unit:	NMC / PI2	Procedure:	ISI-UT-3	Outage No:	PI2RF2002
Summary No.:	501558	Procedure Revision/FC:	9 / ---	Report No:	2002U021
Workscope:	ISI	Work Order No:	0106946	Page:	4 of 10

0 deg Planar

Scan 100.000 % Length X 94.500 % volume of length / 100 = 94.500 % total for 0 deg

45 deg

Scan 1 100.000 % Length X 93.700 % volume of length / 100 = 93.700 % total for Scan 1

Scan 2 100.000 % Length X 91.300 % volume of length / 100 = 91.300 % total for Scan 2

Scan 3 100.000 % Length X 94.500 % volume of length / 100 = 94.500 % total for Scan 3

Scan 4 100 000 % Length X 94.500 % volume of length / 100 = 94 500 % total for Scan 4

Add totals and divide by # scans = 93.500 % total for 45 deg

Other deg 60

Scan 1 100.000 % Length X 97.700 % volume of length / 100 = 97.700 % total for Scan 1

Scan 2 100.000 % Length X 96.900 % volume of length / 100 = 96.900 % total for Scan 2

Scan 3 100.000 % Length X 94.500 % volume of length / 100 = 94.500 % total for Scan 3

Scan 4 100.000 % Length X 94.500 % volume of length / 100 = 94.500 % total for Scan 4

Add totals and divide by # scans = 95.900 % total for 60 deg

Percent complete coverage

Add totals for each angle and scan required and divide by # of angles to determine;

94.633 % Total for complete exam

Note:

Supplemental coverage may be achieved by use of other angles / methods When used, the coverage for volume not obtained with angles as noted above shall be calculated and added to the total to provide the percent total for the complete examination.

Site Field Supervisor: [signature] Date: 2-21-02

Limitation Record

Site/Unit:	NMC / PI2	Procedure:	ISI-UT-3	Outage No.:	PI2RF2002
Summary No.:	501558	Procedure Revision/FC:	9 / ---	Report No.:	2002U021
Workscope:	ISI	Work Order No.:	0106946	Page:	5 of 7-10

Description of Limitation:

2.5" x 2.5" Pads at 18'.3" to 18' 2.8". Two (2) 1" instrumentation lines at 17' 10.5" and 20' 1.3".

Sketch of Limitation: G.\IDDEAL50\PI2RFO2002\SUPPLEMENTAL UT\2002u021_2 bmp

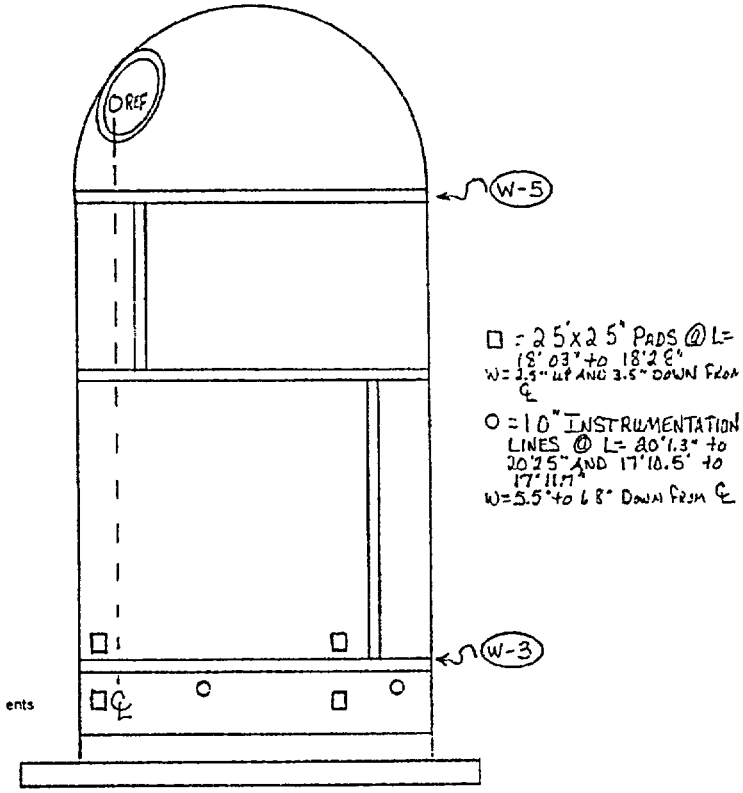

Limitations removal requirements:

N/A

Radiation field: **N/A**

Examiner Level II **Knott, Brian**	Signature Brian A. Knott	Date 2/10/2002	Reviewer **Clay, Sean P.**	Signature	Date 2-13-02
Examiner Level II **Thomas, Travis**	Signature	Date 2/10/2002	Site Review **Wren, Jerry P.**	Signature Jerry P. Wren	Date 2-21-02
Other Level N/A **N/A**	Signature	Date	ANII Review **Clow, Ron**	Signature	Date 2/21/02

ISI Flaw Sizing Worksheet

Site/Unit:	NMC / PI2	Procedure:	ISI-UT-3	Outage No.:	PI2RF2002
Summary No.:	501558	Procedure Revision/FC:	9 / ---	Report No.:	2002U021
Workscope:	ISI	Work Order No.:	0106946	Page:	6 of 7/10 JPW 2-21-02

1) Flaw Number 1
2) Item Number B2 11
3) ISI Interval 3rd Interval ⦿ OK Reviewer JPW
4) Code Edition & Addenda 89 no addenda ⦿ OK Reviewer JPW
5) Method UT
6) Flaw Sketch (See Below) ⦿ OK Reviewer JPW

Flaw View G:\IDDEAL50\PI2RFO2002\Flaw Srzing UT\2001u021-60-1 JPG

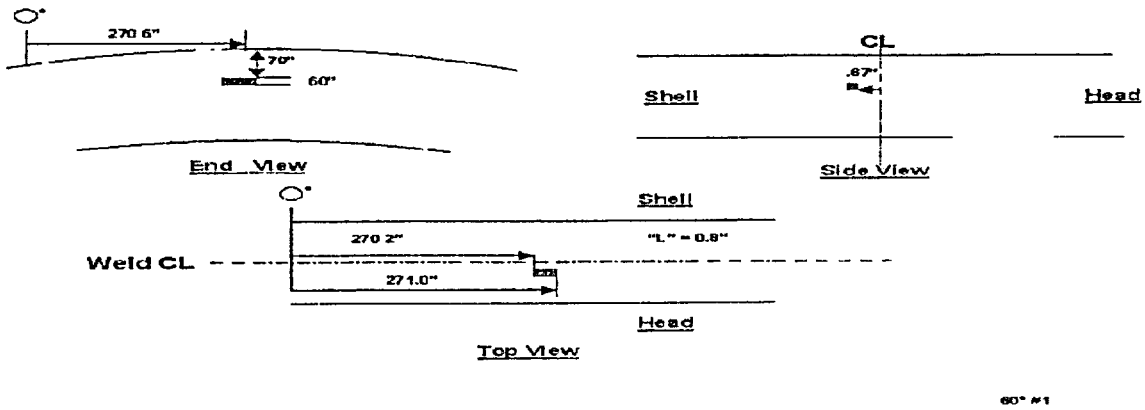

7) Calculations ⦿ OK Reviewer JPW

Show determination of Surface or Subsurface
See attached calculation sheet.

Show determination of type of "a" to use
See attached calculation sheet.

8) ISI-FE-1 Paragraph 7.0 - "Rounding-off Method" was used ⦿ Yes Preparer SPC ⦿ OK Reviewer JPW

9) Code Flaw Dimensions ⦿ OK Reviewer JPW

"l" = .80" "a" = .25" "t *nominal*" = N/A "t *measured*" = 4.5" "s" = 1.2" "w" = N/A

10) Flaw Type ⦿ OK Reviewer JPW Subsurface Planar (UT/RT)

11) Flaw Characterization Figure ⦿ OK Reviewer JPW IWA-3320-1

12) Flaw Characterization Figure Number Flaw 1

13) Was IWA-3300 Flaw Characterization followed? ⦿ Yes ○ No If no, why?

14) The correct Code Edition and Addenda was available and used ⦿ Yes Preparer SPC ⦿ OK Reviewer JPW

15) Prepared by and date
Sean P. Clay 2-14-02
The results are correct and the methodology used is in accordance with applicable codes, standards, specifications and procedures.

16) Review by and date
Jerry P. Wren 2-21-02
The review assures that the results are correct and the methodology used is in accordance with applicable codes, standards, specifications and procedures.

ISI Flaw Disposition Worksheet

Site/Unit:	NMC / PI2	Procedure.	ISI-UT-3	Outage No.:	PI2RF2002
Summary No :	501558	Procedure Revision/FC	9 / ---	Report No.	2002U021
Workscope:	ISI	Work Order No.:	0106946	Page:	7 of 7

1) Flaw Number 1

2) Item Number B-B/B2.11

3) ISI Interval 3rd Interval ⦿ OK Reviewer _____

4) Code Edition & Addenda 89 no addenda ⦿ OK Reviewer _____

5) Acceptance Standard IWB-3510 ⦿ OK Reviewer _____

6) Calculations (See Below) ⦿ OK Reviewer _____

See attached worksheet for calculations and signatures.

7) Results ⦿ OK Reviewer _____

a/l = .31 Code allowable a/t% = 4.5 Calculated a/t% = 5 6 Laminar flaw surface area (0 75 | w) = N/A

8) Table used for analysis ⦿ OK Reviewer _____ IWB-3510-1

9) Was linear interpolation used? ⦿ Yes ○ No If no, why?

10) Was IWA-3200 Significant Digits For Limiting Values followed? ⦿ Yes ○ No If no, why?

11) The correct Code Edition and Addenda was available and used. ⦿ Yes Preparer _____ ⦿ OK Reviewer _____

12) Statement of acceptability or rejectability with basis. ⦿ OK Reviewer _____ ⦿ Accept ○ Reject

○ (a/t) Code allowable > (a/t) calculated

⦿ OEM flaw evaluation handbook (see attached analysis)

⦿ (a/t) Code allowable < (a/t) calculated

13) Prepared by and date

Daniel S. Whitcomb 2/15/2002

The results are correct and the methodology used is in accordance with applicable codes, standards, specifications and procedures

14) Engineering review by and date

Karen LeGoullon 2/15/2002

This review assures that the results are correct and the methodology used is in accordance with applicable codes, standards, specifications and procedures

15) Approved by and date

Monica Vik 2/18/2002

This approval assures that all involved with this flaw sizing and flaw disposition were aware of the necessity that the results and the methodology are correct and in accordance with applicable codes, standards, specifications and procedures

Flaw Sizing Calculations Using Metal Path for Vessel Welds > 2"

For surface and subsurface single planar flaws oriented in plane normal to pressure retaining surface

ASME SECT XI 1989 W/ NO ADDENDA SP **INITIAL TO VERIFY**

ISI Report # 2002U021 Evaluation Performed By: Jerry Wren Date: 2-14-02
Flaw # 1 Reviewed By: Sean Clay Date: 2-14-02

Length

Length of the flaw "*l*" is determined by finding the difference between L1 and L2 for perpendicular scans, W1 and W2 for parallel scans

L and W values are from page 3 of the UT report.

l = 271 (L2) - 270.2 (L1) = .8 inches.

Thickness

Thickness of the component at the location of the flaw, using UT or nom wall (circle one).

This value is from page 2 of the UT report.

"t" = 4.5 inches

Calibration

The measured angle in the calibration block was 60 degrees

Calculations using metal path From page 3 of the UT report, Scan # 2

The flaw exhibited 20% DAC at 2.426 and 3.4 inches MP. Max amplitude is 2.981 inches MP with the transducer exit point at 3.25 inches (W) from the centerline of the weld and 270.6 inches (L) from the 0" reference. (Use of 20% DAC vs. 50% max amp for indications > 100% DAC is conservative.)

1) Determine the upper depth of the flaw from the exam surface.
   2.426 (metal path at 20% upper) * COS of the measured angle .5 = 1.213 inches depth.

2) Determine the lower depth of the flaw from the exam surface.
   3.4 (metal path at 20% lower) * COS of the measured angle .5 = 1.7 inches depth.

3) Determine the depth of the flaw from the exam surface at the maximum amplitude point.
   2.981 (metal path at maximum amplitude point) * COS of the measured angle .5 = 1.490 inches depth.

4) Determine the distance from the center line of the weld to the maximum amplitude point of the flaw
   2.981 (metal path at maximum amplitude point) squared = 8.886 (a^2)
   1.490 (depth at maximum amplitude point) squared = 2.222 (b^2)
   $\sqrt{a^2 - b^2}$ = 2.581 inches of surface distance to the flaw from the transducer exit point.
   3.25 (Wmax) – 2.581 (surf dist) = .669 inches to the centerline of the weld.

5) Determine S by picking the smaller of the following;
   S = 1.213 (result of 1) = distance between exam surface and the upper flaw tip
   >> OR <<
   S = 4.5 (part "t") – 1.7 (result of 2) = 2.8 distance between the side opposite exam surface and the lower flaw tip

6) Determine 2d in though wall thickness.
   1.7 (from step 2) – 1.213 (from step 1) = .487 inches.

Determination of surface or subsurface

0.4d = (2d / 2) * 0.4 = .097

Compare to S (from step 5)

If S is less than 0.4d, the flaw is **surface**. a = 2d + S = N/A inches.

If S is greater than or equal to 0.4a the flaw is **sub-surface**. a = 2a / 2 = .243 inches.

l = .80 (for a/*l* > 0.5, *l* = 2a) t = 4.5 (part thickness)

a = .25 (surf or sub surf, circle one) S = 1.2

ISI Flaw Disposition Worksheet

NMC

Site/Unit: NMC 1 PI2 | Procedure: ISI-UT-3 | Outage No.: PI2RF2002
Summary No.: 501558 | Procedure Revision/FC: 9 1 | Report No.: 20024021
Workscope: ISI | Work Order No: 0106946 | Page: 9 of 10

1) Flaw Number #1 | 3) ISI Interval 3rd. | OK Reviewer KJL
2) Item Number B-B B2.11 | 4) Code Edition & Addenda 1989 No Addenda | OK Reviewer DEW KJL
FLAW IS SUBSURFACE. | 5) Acceptance Standard IWB-3510 | OK Reviewer DEW KJL
6) Calculations (See Below) | OK Reviewer DEW KJL

$\ell = .80''$ $t = 4.5$
$a = .25''$ $S = 1.2$

$a/\ell = \frac{.25''}{.80''} = .31$

$a/t\%_{actual} = \frac{.25''}{4.5''} \times 100 = 5.6\%$

$Y = S/a = \frac{1.2}{.25} = 4.8$

$\therefore Y = 4.8 \therefore Y = 1$

$a/t\%_{allow} @ .30 = 4.4$ $a/t\%_{allow} @ .35 = 5.1\%$

$a/t_{allow} @ .31 = \frac{(5.1-4.4)(.31-.30)}{.35-.30} + 4.4 = 4.5\%$.

FLAW NOT acceptable by IWB-3510-1
CONTINUE ANALYSIS USING WCAP-14166
- FLAW EVALUATION HANDBOOK.

7) Results OK Reviewer DEW
a/l = .31 Code allowable a/t% = 4.5 Calculated a/t% = 5.6 Laminar flaw surface area (0.75 | w) = N/A
8) Table used for analysis OK Reviewer KJL IWB-3510-1
9) Was linear interpolation used? Yes No If no, why?

10) Was IWA-3200 Significant Digits For Limiting Values followed? Yes No If no, why?

11) The correct Code Edition and Addenda was available and used. Yes Preparer DEW OK Reviewer KJL
12) Statement of acceptability or rejectability with basis. OK Reviewer KJL Accept Reject
- (a/t) Code allowable > (a/t) calculated
- OEM flaw evaluation handbook (see attached analysis)
- (a/t) Code allowable < (a/t) calculated

FLAW is acceptable per WCAP-14166 per Section A15 page A15-6.

13) Prepared by and date
Daniel A. Wheeler 2-15-2002
The results are correct and the methodology used is in accordance with applicable codes, standards, specifications and procedures.

14) Engineering review by and date
Karen Lesh 2-15-02
This review assures that the results are correct and the methodology used is in accordance with applicable codes, standards, specifications and procedures.

15) Approved by and date
Monica Uk 2/19/02
This approval assures that all involved with this flaw sizing and flaw disposition were aware of the necessity that the results and the methodology are correct and in accordance with applicable codes, standards, specifications and procedures.

Outage No. PI2RF2002
Summary 501558
Report # 20024021
FLAW #1
W.O. 0106946.

$a = .25$ $\ell = .80''$
$t = 4.5$
$s = 1.2$

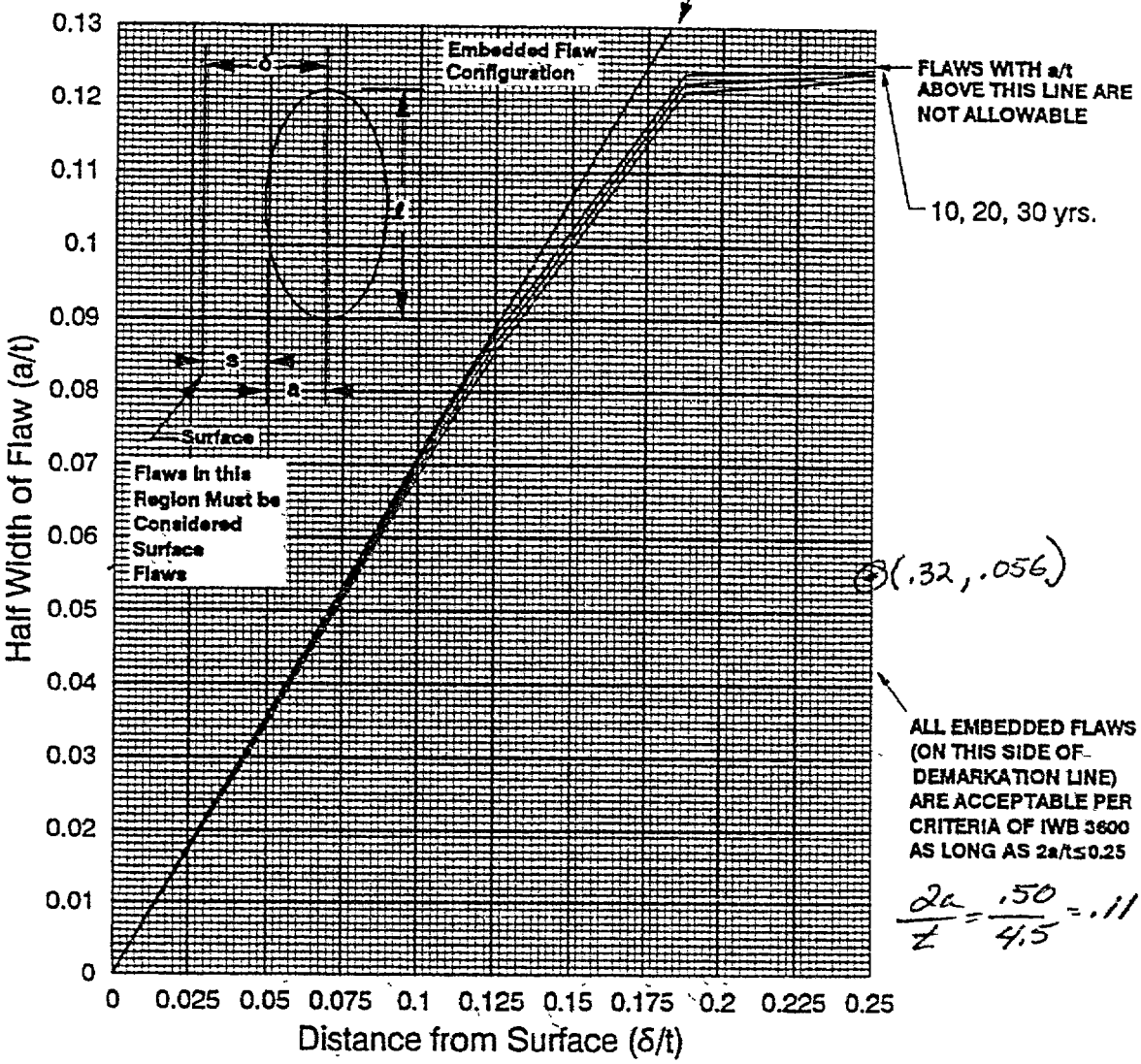

$a/t = \frac{.25}{4.5} = .056$

$\frac{2a}{t} = \frac{.50}{4.5} = .11$

$$\delta/t = \frac{s+a}{t} = \frac{1.2+.25}{4.5} = \frac{1.45}{4.5} \simeq .32$$

FLAW is acceptable per WCAP 14166. Subj A15
Prepared by [illegible]
2-15-02

Figure A-15.4 Flaw Evaluation Chart for the Lower Shell Circumferential Welds of the Pressurizer

X Inside Surface	___ Surface Flaw	___ Longitudinal Flaw
X Outside Surface	X Embedded Flaw	X Circumferential Flaw