APPENDIX B.15

CRITICALITY SAFETY ANALYSES FOR SQUARE TUBE STORAGE BASKETS AT THE MORRIS OPERATION

MAY 1987

NUCLEAR FUELS & ENGINEERING SERVICES DEPARTMENT
San Jose, California

March 13, 1987

PSD-87-035

cc: P. F. Billig
B. F. Judson M/C 620
J. B. Kesmon M. O.
R. S. Vij

TO: A. W. Fanning

FROM: D. F. Casey

SUBJECT: MORRIS OPERATION - CONSOLIDATED FUEL CONFIGURATION - ELIMINATION OF ONE INCH DIAMETER FLOW HOLES.

Ref:
1) WA - ZZD141770 Rev. 0, "T/H Analysis of M.O. Sq. Tube Baskets"
2) MDE-109-0986, "Consolidated Spent Fuel Configuration at Morris Operation, Thermal Hydraulic Analysis", P. F. Billig, October 1986.

In the Reference 1 work agreement, it was requested that a study be conducted to determine if the one inch diameter flow holes in the bottom, middle and top plates, between the basket tubes, could be eliminated. The study was to be based on prior results documented in Reference 2.

An evaluation of the work requested in the work agreement, indicated there were insufficient hours and schedule time to conduct a detailed analytical study incorporating the model changes required to answer the question of elimination of the flow holes. However, by reviewing the previous results (Reference 2), it was determined that there was sufficient backup information for making the following changes.

1) On Base Plate (Dwg No. C6221) at each canister location, reduce number of one inch diameter holes from four to one. This results in eliminating twenty seven one inch diameter holes in the base plate. The design shall assure the entry of water into the bottom of a loaded cannister.

   The prior analysis (Reference 2) took no credit for flow internal to the fuel element assembly, the holes at the bottom were only there to insure water was admitted to the fuel element pin area and to insure there was proper drainage from the fuel element.

2) In Reference 2, the requirement was made that a one-inch diameter hole be provided in the intermediate and top guide plates between every basket tube. This requirement may be modified so that in place of each hole, two slots are provided as shown in Figure 1.

The use of two slots will still provide the Reference 2 desired flow path while reducing the fabrication costs for the plates.

D. F. Casey

Verified by: R. Muralidharan

/slg

GENERAL ELECTRIC CO.

Nuclear Energy Business Operations

ENGINEERING CALCULATION SHEET

PSD-87-035

NUMBER _____ DATE 3-4-87

SUBJECT _____ BY D.F CASEY SHEET ____ OF ____

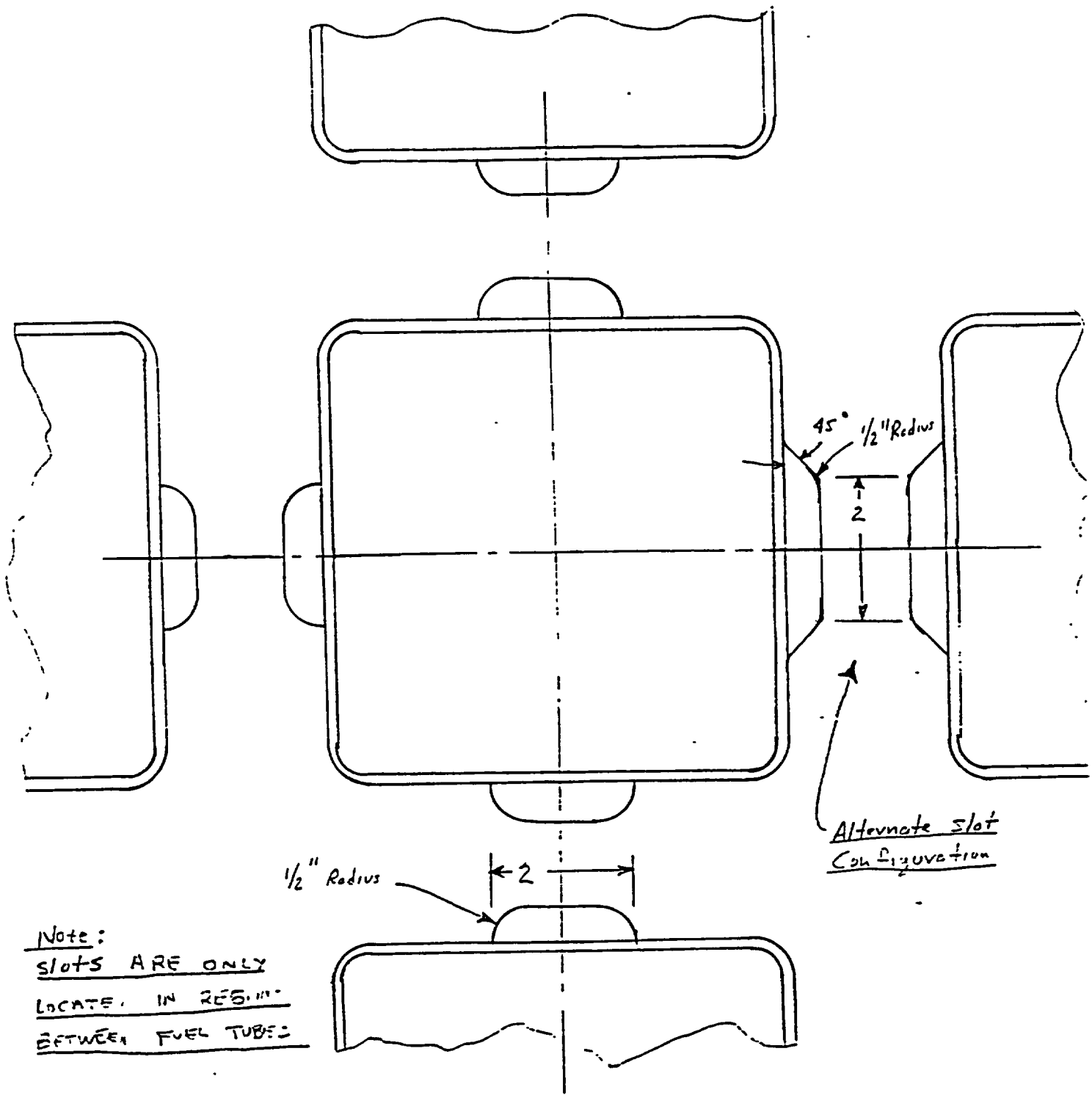

Note:
slots ARE ONLY LOCATED IN RESIN BETWEEN FUEL TUBES

FIGURE 1

RECOMMENDED COOLANT slot PATTERN – CONSOLIDATED FUEL CONFIGURATI

GENERAL ELECTRIC

WORK AUTHORIZATION	WA SERVICES MAR 16 1987 RECEIVED	WA SERVICES MAR 16 1987 ISSUED	WA NO. 22X371770 REV. NO. 0 SUPP. NO. — SHEET 1 OF 3

☐ PLANNING (EST. FUNDING DATE _____) ☒ FUNDING

SUBJECT: T/H ANALYSIS OF M.O. SQ. TUBE BASKETS		PROJECT/PROGRAM NAME: FUEL STORAGE	PROJ/PROG "P" NO: PHM32
		AUTHORIZED DOC	JOB TYPE: ~~03~~ 10
		AUTHORIZED FUNDING: 150 MHRS	JOB ORDER NO.: RA410
ORIGINATOR: A.W. FANNING	DATE 2/26/87, COMP 858, M/C 620, EXT 53756	PASR NUMBER: ~~EAD 14~~ EAX37	
COMMERCIAL RESPONSIBILITY: A.W. FANNING A.W. Fanning	DATE 2/26/87, COMP 858, M/C 620, EXT 53756	TECHNICAL RESPONSIBILITY: D.F. CASEY	DATE 3-5-87, COMP 668, M/C 736, EXT 4401

SPECIFIC OBJECTIVES, OVERALL SCOPE, SCHEDULE

THE OBJECTIVE OF THIS WA IS TO AUTHORIZE A THERMAL HYDRAULIC ANALYSIS OF PROPOSED BWR FUEL BASKETS AT GE'S MORRIS OPERATION. THIS W.A. SUPPLEMENTS WORK PREVIOUSLY PERFORMED UNDER W.A. LGD150905 (TASK 7).

THE SCOPE OF WORK IS AS FOLLOWS:

- DETERMINE THE EFFECT ON PRIOR RESULTS* OF ELIMINATING THE 1"Ø FLOW HOLES IN THE BOTTOM, MIDDLE, AND TOP PLATES (ONLY THE HOLES BETWEEN BASKET TUBES).

* SEE PAUL BILLIG LETTER TO BURT JUDSON, DATED 10/3/86, ENGINEERING REPORT MDE-109-0986, & DRF F22-00004.

3/12/87

RESOURCE SUMMARY	LABOR HRS.	S/C HRS.	COMP NBU	LABOR $	S/C $	COMP $	T&L $	DIR MTL $	GRAPH $	OTHER $	TOTAL $
PERFORMER ESTIMATE											

DISTRIBUTION (NAME AND M/C)

B.F. JUDSON – 620
J.D. KESMAN – MORRIS OPERATION

ADDITIONAL SIGNATURES	DATE	COMP	M/C
Ram S Vij	3/5/87	668	736

NEO 945 A (REV. 10/85)

GENERAL ELECTRIC

WORK AUTHORIZATION	RESOURCE AND SCHEDULE PLAN	WA NO. ZZX371770 REV. NO. 0 SUPP. NO. 1 SHEET 2 OF 2

TASK NO.	ACTIVITY DESCRIPTION (30 CHARACTERS MAXIMUM)	JOB ORDER NUMBER	PERF COMP	SPECIFIC OUTPUT	TASK SCHEDULE FISCAL WEEK START	COMPLETION REQ'D.	COMPLETION COMMIT	ACT TYP	INIT (PRINT)	WPSS TASK CODE	RESOURCE ESTIMATE * CAT	RESOURCES
1	PERFORM ANALYSIS	RA410	668	ENGIN-EERING FILE ENTRY	8709	8712	8712	R	DFC			20
2	VERIFY ANALYSIS	RA410	668	ENGIN-EERING FILE ENTRY	8711	8712	8712		DFC			8
3	DOCUMENT RESULTS	RA410	668	LETTER REPORT		8713	8713		DFC			8

* RESOURCE CATEGORIES

EH - LABOR HOURS
SE - SUBCONTRACT EXT. $
ME - SUBCONTRACT EXT. HRS
SI - SUBCONTRACT INT. $
MI - SUBCONTRACT INT. HRS.
CP - COMPUTER $
CN - COMPUTER NBU
TL - TRAVEL & LIVING
GR - GRAPHICS
DM - DIRECT MATERIALS
OT - OTHER COSTS

GENERAL ELECTRIC CO.
Nuclear Energy Business Operations
ENGINEERING CALCULATION SHEET

NUMBER _____ DATE 2-25-87
SUBJECT _____ BY AWF SHEET ____ OF ____

CHANGES FROM BILLIG'S ANALYSIS

1. DELETE 1" HOLES BTWN TUBES IN BOTTOM, MIDDLE, & TOP PLATES.

2. INCLUDE EFFECT OF 2"Φ LATCH ROD HOLES? (PARTIALLY OBSCURED BY LATCH MECHANISMS)

3. CONSIDER ONLY 1 MIDPLANE GUIDE PLATE

GENERAL ELECTRIC

NUCLEAR ENERGY BUSINESS OPERATIONS
GENERAL ELECTRIC COMPANY • 175 CURTNER AVENUE • SAN JOSE, CALIFORNIA 95125

RDE 02-0187
CLASS II
DRF A00-02877

CRITICALITY SAFETY ANALYSES FOR SQUARE TUBE STORAGE BASKETS AT THE MORRIS OPERATION

MAY, 1987

PREPARED BY: P. van Diemen

P. van Diemen, Senior Engineer
Reactor System Design

VERIFIED BY: R. K. Stitt

R. K. Stitt, Senior Engineer
Spent Fuel Technology

APPROVED BY: W. A. Pitt

W. A. Pitt, Manager
Reactor System Design

APPROVED BY: N. J. Biglieri

N. J. Biglieri, Manager
Reactor Design Engineering

DISCLAIMER OF RESPONSIBILITY

This document was prepared by or for the General Electric Company. Neither the General Electric Company nor any of the contributors to this document:

A. Makes any warranty or representation, express or implied, with respect to the accuracy, completeness, or usefulness of the information contained in this document, or that the use of any information disclosed in this document may not infringe privately owned rights; or

B. Assumes any responsibility for liability or damage of any kind which may result from the use of any information disclosed in this document.

CONTENTS

Page

ABSTRACT vi

1. INTRODUCTION 1-1

2. FUEL BUNDLE STORAGE CRITICALITY ANALYSES 2-1
   2.1 Basis and Assumptions 2-2
   2.2 Method of Calculation 2-2
   2.3 Results 2-2
      2.3.1 Comparison to 1975 Analyses 2-4
      2.3.2 7X7 Fuel Bundle Storage 2-6
      2.3.3 8X8 Fuel Bundle Storage 2-8
   2.4 Application of Results 2-9
   2.5 Conclusions 2-9

3. FUEL ROD STORAGE CRITICALITY ANALYSES 3-1
   3.1 Basis and Assumptions 3-2
   3.2 Method of Calculation 3-2
   3.3 Results 3-4
      3.3.1 7X7 Rod Type Storage 3-4
      3.3.2 8X8 Rod Type Storage 3-8
   3.4 Application of Results 3-9
   3.5 Conclusions 3-10

4. REFERENCES 4-1

APPENDIX A: MERIT MONTE CARLO PROGRAM A-1

APPENDIX B: 95/95 STATISTICS B-1

TABLES

Table	Title	Page
2-1	Summary of Results for Fuel Bundle Storage	2-3
2-2	Merit Geometry Model Input (Benchmark Calculation)	2-5
2-3	Benchmark Comparison to 1975 Results	2-6
2-4	Storage Cell Pitch Variations	2-7
3-1	Fuel Rod Storage Parameters	3-3
3-2	7X7 Rod Storage Results	3-5
3-3	8X8 Rod Storage Results	3-6
3-4	Optimum 7X7 Rod Storage Results	3-8
3-5	Optimum 8X8 Rod Storage Results	3-9
B-1	Example of Combining Uncertainties	B-3

ILLUSTRATIONS

Figure	Title	Page
2-1	Merit Geometry Model of Storage Basket	2-11
2-2	K-infinity as a Function of Storage Cell Pitch	2-12
2-3	Storage Basket with Eccentric Bundle Positioning	2-13
3-1	MERIT Model for Single Storage Cell Geometry	3-11
3-2	K-infinity versus 7X7 Fuel Rods per Canister	3-12
3-3	MERIT Model for Morris Basket with Rod Storage	3-13
3-4	K-infinity versus 8X8 Fuel Rods per Canister	3-14

ABSTRACT

A new BWR spent fuel storage basket is being designed for the Morris operation using square storage cells at an 8.875 inch pitch. The current storage baskets contain round storage cells at an 8.625 inch pitch. Criticality safety analyses were performed to demonstrate that k-effective is maintained less than 0.95 with the new square cell geometry. The analyses includes storage of 7X7 and 8X8 UO_2 fuel bundles, as well as containers packed with fuel rods obtained from either 7X7 or 8X8 fuel bundles. The rod storage system would be the result of fuel rod consolidation for improved utilization of the Morris basins. The criticality safety analyses were performed with the General Electric MERIT Monte Carlo neutron transport computer program using ENDF/B-IV cross sections.

1. INTRODUCTION

General Electric (GE) plans to modify the design of the spent fuel storage baskets used to store BWR fuel at the Morris operation. The objective of the new design is to accommodate the storage of canisters containing fuel rods in addition to the normal fuel bundle storage.

The purpose of this report is to evaluate the criticality safety of the newly designed Morris spent fuel storage baskets. All of the criticality analyses for this report were performed with the General Electric MERIT Monte Carlo neutron transport computer program using ENDF/B-IV cross sections.

The current configuration of the spent fuel storage basket is a 3 x 3 square array of 8 inch Schedule 10 stainless steel pipes. The center to center spacing of the pipes is 8.625 inches. Each pipe is capable of storing one BWR fuel bundle. The criticality analyses for this configuration was performed by Battelle-Northwest in 1975 (Reference 4-1).

In order to improve the storage system at Morris, fuel rod consolidation is being evaluated. Special square canisters have been designed which allow the storage of fuel rods from two fuel bundles. The fuel rods can be from either 7X7 or 8X8 fuel bundles. The storage baskets were redesigned with square storage tubes having a center to center nominal spacing of 8.875 inches.

The use of square storage tubes enhances the Morris storage system by accommodating either normal BWR fuel bundles or canisters containing fuel rods. Criticality safety analyses supporting the new square tube storage design with either fuel bundles or fuel rod configurations is the subject of this report.

Section 2

FUEL BUNDLE STORAGE CRITICALITY ANALYSES

2.1 Basis and Assumptions

The Morris fuel storage baskets each contain a 3 x 3 array of storage cells totally immersed in unborated water. The storage array is maintained subcritical by controlling the storage cell spacing and the allowable fuel configuration. There are no strong neutron poisons used, hence the storage array is maintained subcritical by overmoderation. The requirement of the storage array is to maintain k-effective less than or equal to 0.95 under all normal and abnormal storage conditions, including all calculational biases and uncertainties. All calculations are performed as an infinite two-dimensional array of storage baskets. As a result, there is no credit taken for neutron leakage.

2.2 Method of Calculation

The criticality safety analyses were performed with the General Electric MERIT Monte Carlo neutron transport computer program. The cross sections were obtained from the ENDF/B-IV library. A general description of the MERIT program and the benchmark qualifications are contained in Appendix A. Each MERIT Monte Carlo calculation was executed for 55,000 neutron histories. Since each calculation was initiated with a uniform neutron source distribution, the first 5,000 neutron histories were discarded. The resulting k-infinity was calculated based on the remaining 50,000 neutron histories.

2.3 Results

The following subsections contain a description of the criticality safety analyses for fuel bundle storage. A summary of the calculated k-infinity results is contained in Table 2-1.

Table 2-1 Summary of Results for Fuel Bundle Storage

CASE*	Deg C	k-infinity (± 1σ)	(upper 95/95)
1. 8.625 in Pitch	20	0.7681 ± 0.0036	0.7860
2. 8.500 in Pitch	20	0.7679 ± 0.0029	0.7844
3. 8.875 in Pitch	20	0.7627 ± 0.0027	0.7788
4. 9.125 in Pitch	20	0.7768 ± 0.0030	0.7894
5. 8.500 in Pitch (Eccentric Bundles)	20	0.7892 ± 0.0027	0.8053
6. 8.500 in Pitch (Eccentric Bundles)	100	0.8199 ± 0.0025	0.8356
7. 8.500 in Pitch (8X8 Fuel Bundles)	20	0.7585 ± 0.0030	0.7752

* All fuel bundles are 7X7 except as noted. The fuel enrichment was 3.42 wt.% U-235.

2.3.1 Comparison to 1975 Analyses

The 1975 criticality analyses (Reference 4-1) for the storage baskets with round tubes were performed with the KENO II computer program using ENDF/B-III cross sections. A benchmark calculation was performed to determine the accuracy of the 1975 results when compared to the MERIT computer program with ENDF/B-IV cross sections.

The benchmark calculation was performed with the highest enrichment 7X7 fuel bundle contained in the 1975 report. The enrichment was 3.42 wt.% Uranium-235 with no burnable poisons. The analyses was performed with a water temperature of 20 degrees Centigrade. The nominal fuel bundle center to center spacing within a storage basket was 8.8625 inches. The geometry model for the benchmark calculation contained the proposed square tube configuration. Both the original round tube and the square tube designs consist of type 304 stainless steel. Since the square tube contains 20% less stainless steel than the round tube, the calculation will result in a conservatively higher k-infinity. The inputs to the geometry model for the benchmark calculation are contained in Table 2-2. The geometry model is illustrated in Figure 2-1. The results of the benchmark comparison are contained in Table 2-3.

The MERIT k-infinity includes a critical benchmark bias correction discussed in Appendix A. Since the MERIT k-infinity is lower with 20% less stainless steel, the KENO II results are conservatively high by approximately 0.01 delta k-infinity. As a result, the 1975 analyses remains valid for fuel bundle storage at a nominal cell pitch of 8.625 inches with either the round or the square storage tube designs.

Table 2-2 MERIT Geometry Model Inputs
(Benchmark Calculation)

Parameter	Value
Fuel Basket Pitch (inch)	26.25 (minimum)
Storage Tube I.D. (inch)	6.125
Storage Tube Wall (inch)	0.125
Storage Tube Pitch (inch)	8.625
Storage Tube Material	304 Stainless Steel*
Fuel Bundle Rod Array	7X7
Fuel Rod O.D. (inch)	0.563
Fuel Rod I.D. (inch)	0.499
Fuel Pellet O.D. (inch)	0.487
Fuel Rod Pitch (inch)	0.738
Pellet U-235 Enrichment (wt.%)	3.42
UO_2 Density (gm/cc)	10.96
Water Rods	None
Burnable Poisons	None
Rod Enrichment Distribution	Uniform

* Stainless Steel Composition used was 8 wt.% Ni, 18 wt.% Cr, 74 wt.% Fe.

Table 2-3 Benchmark Comparison to 1975 Results

Computer Program	X-Section Library	k-infinity (± 1σ)
KENO II	ENDF/B-III	0.781 ± 0.007
MERIT	ENDF/B-IV	0.768 ± 0.004

2.3.2 7X7 Fuel Bundle Storage

The following sensitivity calculations were performed using the 7X7 fuel bundle described in Table 2-2. The fuel and moderator temperature is 20 degrees Centigrade unless otherwise specified.

2.3.2.1 Fuel Bundle Pitch

The nominal fuel bundle storage cell pitch, within a storage basket, was initially reduced from 8.625 to 8.50 inches and then later increased to 8.875 inches. Analyses were performed to determine the sensitivity of k-infinity to storage cell pitch. The geometry model used for the analyses is illustrated in Figure 2-1. The geometry model consists of one eighth of a storage basket with mirror reflector boundaries. The results are contained in Table 2-4 and illustrated in Figure 2-2.

The storage tube pitch did not significantly change k-infinity between 8.500 and 8.875 inches because of the fixed basket dimensions. When the storage tube pitch is decreased, the 9 storage tube locations within a basket become more neutronically coupled while becoming decoupled from the adjacent baskets. Conversely, an increase in pitch decreases neutronic coupling of the storage tubes within a basket and increases the neutronic coupling between adjacent baskets. At a nominal storage tube pitch of 8.75 inches the pitch within a storage

basket is equal to the pitch between the outer row of storage tubes of adjacent baskets. As a result, the minimum k-infinity will occur at the proximity of an 8.75 inch storage cell pitch. The k-infinity increased at the storage tube spacing of 9.125 inches since this results in an 8.00 inch pitch between the outer row of adjacent baskets. Based on the shape of the k-infinity curve illustrated in Figure 2-2, the storage array k-infinity is approximately constant between 8.50 and 9.00 inches, to within 0.01 delta k-infinity.

Table 2-4 Storage Cell Pitch Variations

Nominal Pitch (inches)	k-infinity (± 1σ)
8.500	0.7679 ± 0.0029
8.625	0.7681 ± 0.0036
8.875	0.7627 ± 0.0027
9.125	0.7768 ± 0.0030

The following sensitivity calculations were performed with a nominal storage tube pitch of 8.50 inches.

2.3.2.2 Eccentric Positioning

The storage baskets were analyzed assuming the fuel bundles were in a tight packed array by positioning the fuel bundles within their storage tubes as close to the center of the cell as possible. The geometry of the eccentric bundle array is illustrated in Figure 2-3. The nominal center to center spacing of the storage tubes was 8.50 inches. The resulting k-infinity increased by 0.021 delta-k when compared to the base case with centered fuel bundles.

2.3.2.3 Moderator Temperature

The storage baskets were also analyzed assuming the maximum allowable moderator temperature of 100 degrees Centigrade. Since the storage array is over-moderated, the minimum moderator density (i.e., maximum temperature) will result in the maximum k-infinity. No boiling (i.e., voiding) was assumed. In addition, the calculational model also assumed the more reactive configuration of eccentric bundle positioning described in Subsection 2.3.2.2. The combined effect of increased temperature and eccentric bundle positioning, resulted in a 0.052 delta k-infinity change relative to the base case with centered fuel bundles at 20 degrees Centigrade. This combination of eccentric fuel bundle positioning and increased moderator temperature represents the worst case abnormal storage condition. The maximum k-infinity at a 95% probability with a 95% confidence level was calculated to be 0.8356.

2.3.3 8X8 Fuel Bundle Storage

The criticality safety analyses performed in 1975 (Reference 4-1) were performed for 7X7 fuel bundle storage. Since then, the 8X8 fuel bundle has replaced the 7X7 fuel bundle in BWR application. The outside dimension of the square array of rods has remained the same for the 7X7 and 8X8 fuel bundle. Therefore, the only significant geometry change is the quantity and distribution of the Uranium dioxide within the fuel bundle. A comparison calculation was performed using a typical 8X8 fuel bundle geometry. The dimensions of the 8X8 fuel bundle are contained in Table 2-3. The bundle average enrichment was maintained the same as that used in the 7X7 bundle analyses (i.e., 3.42 wt.% Uranium-235). The fuel storage k-infinity was 0.010 delta k-infinity less than with the 7X7 fuel bundle with the same average enrichment.

2.4 Application of Results

The maximum k-infinity of an as-built fuel bundle is a function of bundle geometry, bundle enrichment, rod enrichment distribution, burnable poison concentration, void history and exposure. The maximum exposure dependent k-infinity of an as-built fuel bundle, either 7X7 or 8X8, calculated in the uncontrolled reactor core geometry, has historically remained below 1.26 (Reference 4-2). This value is limited by the core excess reactivity and the control strength of the control rods. The k-infinity of the 3.42 wt.% U-235 7X7 or 8X8 fuel bundle used in the criticality analyses, in the uncontrolled reactor core geometry, is approximately equal to 1.35. Therefore, the results of the criticality analyses for bundle storage is applicable to all 7X7 and 8X8 fuel designs built to date, at all fuel exposures. Variations in the 7X7 and 8X8 fuel bundle designs, e.g., fuel rod diameter, cladding thickness and fuel rod enrichment distributions, are all parameters which are included in the fuel bundle k-infinity determination.

2.5 Conclusions

The criticality safety analyses for the Morris fuel storage baskets were conservatively analyzed with a limiting 7X7 and 8X8 design basis fuel bundle. These fuel bundles were conservative because they were very high enrichment (i.e., 3.42 wt.% U-235) with no burnable poisons and no exposure. As a result, the k-infinities for these fuel bundles in the uncontrolled reactor core geometry are greater than that of any as-built fuel bundle, at all exposures. This includes all design variations (e.g., rod and pellet diameters, etc.) of the 7X7 and 8X8 fuel bundles which have been introduced to date. The worst case abnormal storage condition resulted in a maximum k-infinity equal to 0.836, which is considerably less than the allowable limit of 0.95 k-effective. The analyses were performed with the proposed

square tube storage cells, however, the results and conclusions, can also be applied to the current round tube storage cell design. The round tube design conservatively contains more stainless steel structure to absorb neutrons. The current round tube storage cell design is also more restrictive in the movement of the stored fuel bundle. As a result, the eccentric bundle position analyses will have a smaller k-infinity increase than for the proposed square tube storage cell design.

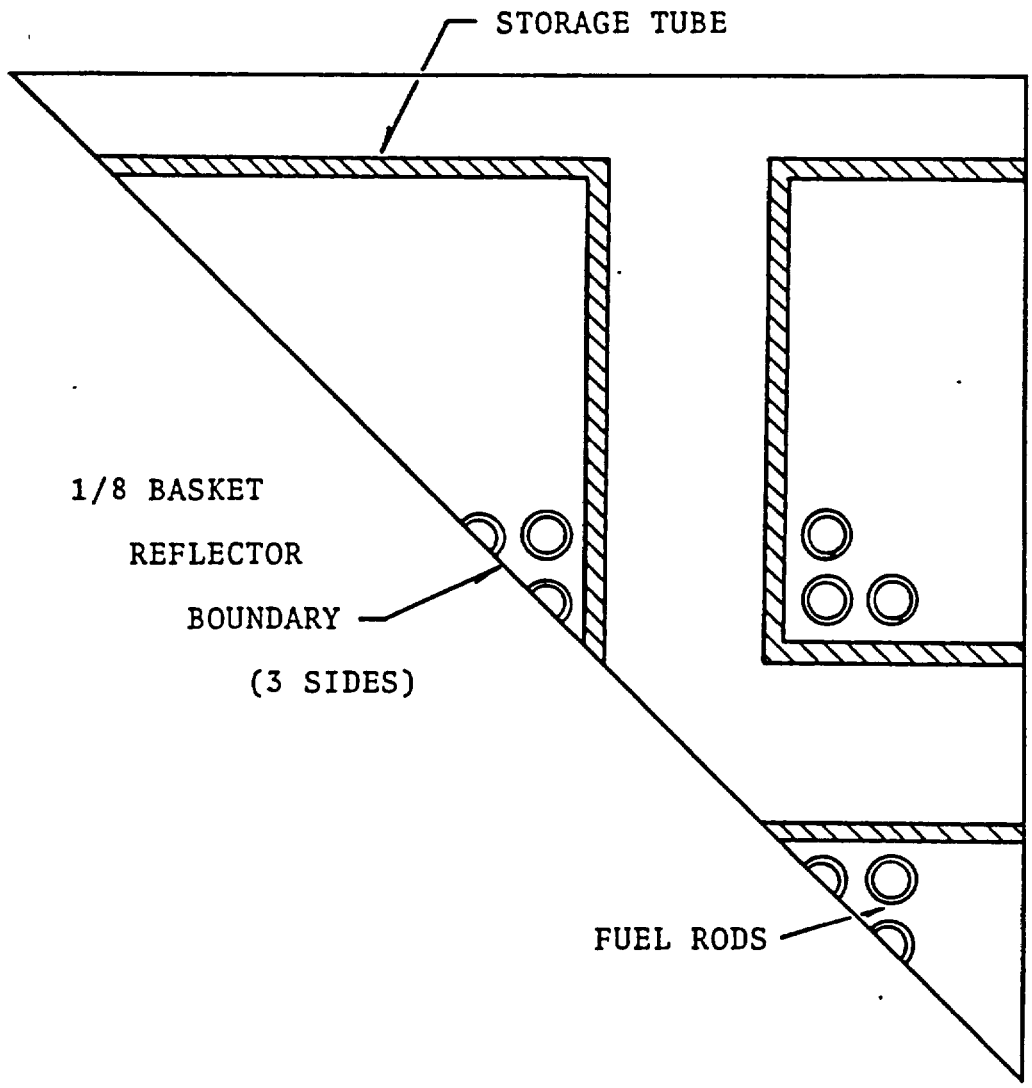

Figure 2-1 MERIT Geometry Model of Storage Basket

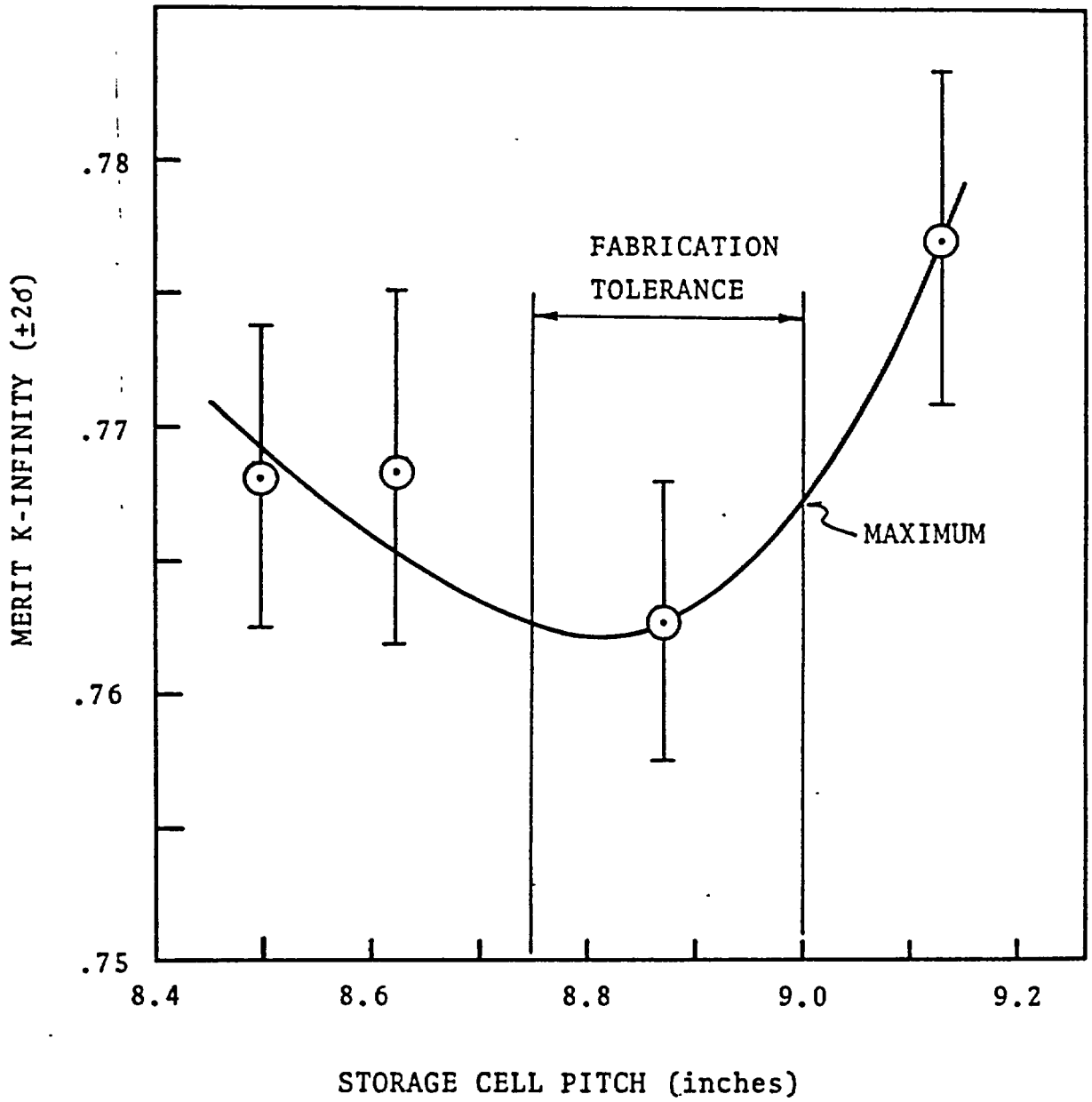

Figure 2-2 K-infinity as a Function of Storage Cell Pitch

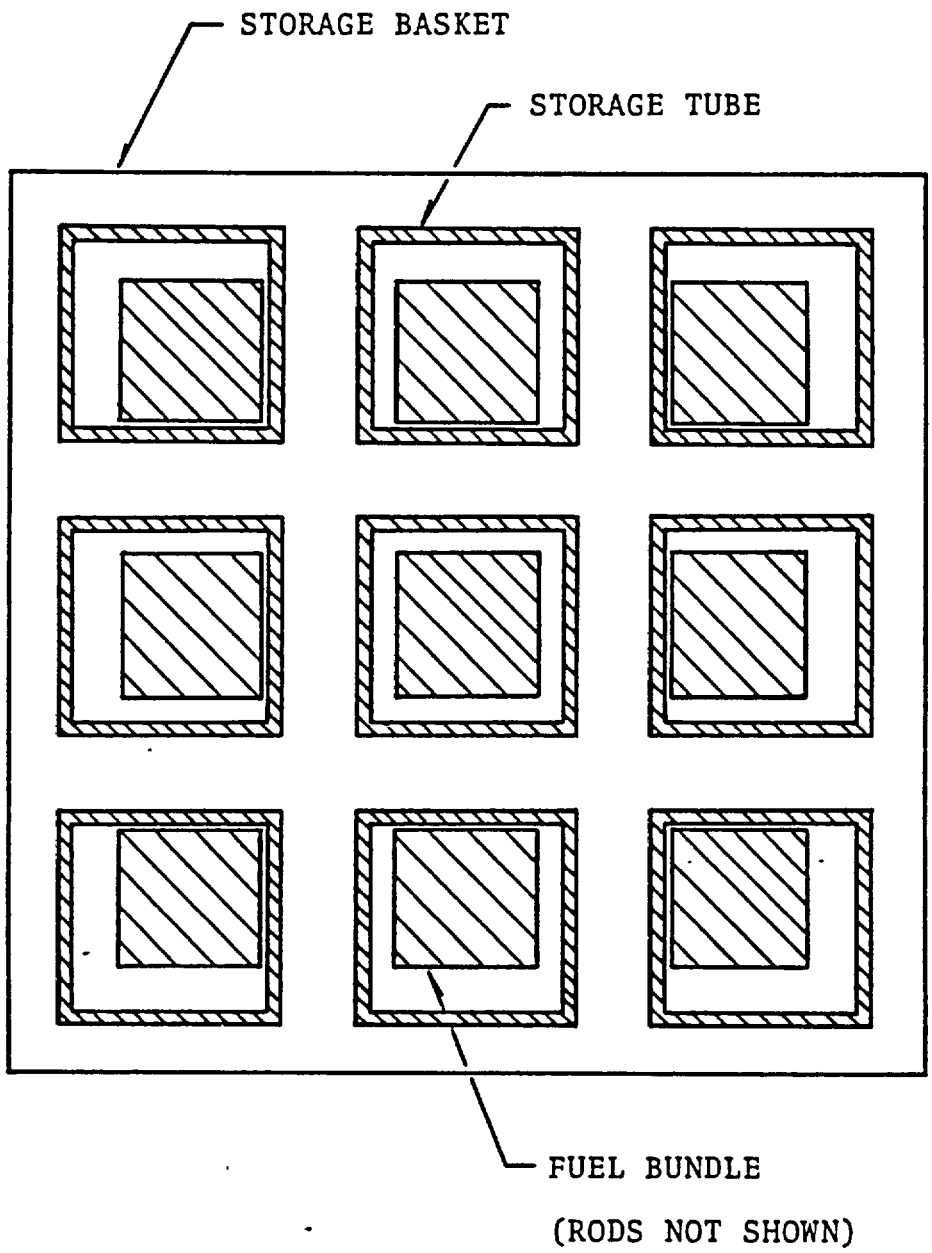

Figure 2-3 Storage Basket with Eccentric Bundle Positioning

Section 3

FUEL ROD STORAGE CRITICALITY ANALYSES

3.1 Basis and Assumptions

The Morris spent fuel storage baskets each contain a 3 x 3 array of storage cells totally immersed in unborated water. The individual storage cells are square tubes on a nominal 8.875 inch center to center spacing. Each tube can store a single canister containing the fuel rods from either two 7X7 or two 8X8 fuel bundles. A canister can also be partially filled with fuel rods. The dimensions of the storage tubes and canisters are contained in Table 3-1. The storage array is maintained subcritical by controlling the storage cell spacing. There are no strong neutron poisons used, hence the storage array is maintained subcritical by overmoderation. The requirement of the storage array is to maintain k-effective less than or equal to 0.95 under all normal and abnormal storage conditions, including all calculational biases and uncertainties. All calculations are performed as an infinite two-dimensional storage array. As a result, there is no credit taken for neutron leakage.

A fuel bundle normally consists of fuel rods with different enrichments throughout the lattice in order to maintain a flat local power distribution during burnup. Once a fuel bundle is disassembled it is conceivable that all of the high enrichment rod types could be stored together resulting in a high k-infinity storage configuration. Therefore, in order to bound all canister loading possibilities, the following analyses assumes that the fuel rods are unirradiated, with no burnable poisons, and containing the maximum rod enrichment fabricated by General Electric. The highest enrichment for a General Electric 7X7 fuel rod is 3.03 wt.% U-235. The highest enrichment for a General Electric 8X8 fuel rod is 3.95 wt.% U-235.

3.2 Method of Calculation

The criticality safety analyses were performed with the

Table 3-1 Fuel Rod Storage Parameters

Parameter	Value
Fuel Basket Pitch (inch)	26.25 (minimum)
Storage Tube I.D. (inch)	6.125
Storage Tube Wall (inch)	0.117 (minimum)
Storage Tube Pitch (inch)	9.000
Storage Tube Material	304 Stainless Steel*
Rod Canister O.D. (inch)	6.00
Rod Canister Wall (inch)	0.054 (minimum)
Rod Canister Material	304 Stainless Steel*
7X7 Rod Types:	
Fuel Rod O.D. (inch)	0.563
Fuel Rod I.D. (inch)	0.499
Fuel Pellet O.D. (inch)	0.487
U-325 wt.%	3.20
UO_2 Density (gm/cc)	10.96
8X8 Rod Types:	
Fuel Rod O.D. (inch)	0.493
Fuel Rod I.D. (inch)	0.425
Fuel Pellet O.D. (inch)	0.416
U-235 wt.%	3.95
UO_2 Density (gm/cc)	10.96

* Stainless Steel Composition used was 8 wt.% Ni, 18 wt.% Cr, 74 wt.% Fe.

General Electric MERIT Monte Carlo neutron transport computer program. The cross sections were from the ENDF/B-IV library. A general description of the MERIT program and the benchmark qualifications are contained in Appendix A. Each MERIT Monte Carlo calculation was executed for 55,000 neutron histories. Since each calculation was initiated with a uniform neutron source distribution, the first 5,000 neutron histories were discarded. The resulting k-infinity was calculated based on the later 50,000 neutron histories.

3.3 Results

The following subsections contain the descriptions of the criticality safety analyses for the storage of canisters containing fuel rods. The analyses are divided into storage of fuel rods from 7X7 fuel bundles and 8X8 fuel bundles. A summary of the calculated k-infinities, with an optimum number of fuel rods per canister, are contained in Tables 3-2 and 3-3.

3.3.1 7X7 Rod Storage

To further provide conservatism, the analyses were performed with 3.20 wt.% U-235, using the Uranium dioxide theoretical density. This increase conservatively bounds the as-built fuel rod enrichments including any uncertainties for enrichment tolerance.

3.3.1.1 Optimum Rod Array

The optimum number of fuel rods per canister was determined for the 7X7 rod types. The geometry model was simplified to a single cell with reflector boundaries, as illustrated in Figure 3-1. With this model, all canisters are on an equal center to center spacing. The fuel rods within a canister were assumed to be uniformly distributed on a square pitch and occupying the

Table 3-2 7X7 Rod Storage Results

Canister Pitch (inch)	Rods per Canister	k-infinity (± 1σ)
8.50	49	.8575 ± .0031
"	64	.8740 ± .0030
"	81	.8568 ± .0028
8.875	49	.8127 ± .0029
"	64	.8198 ± .0030
"	81	.8128 ± .0023
"	100	.7809 ± .0025

Table 3-3 8X8 Rod Storage Results

Canister Pitch (inch)	Rods per Canister	k-infinity (± 1σ)
8.50	64	.8979 ± .0031
"	81	.9087 ± .0029
"	100	.9044 ± .0024
8.875	64	.8623 ± .0032
"	81	.8694 ± .0028
"	100	.8546 ± .0027
"	121	.8315 ± .0023

maximum area available within the canister. By maximizing the fuel rod pitch within the canister, the distance between adjacent canisters is reduced, resulting in the maximum calculated k-infinity. The k-infinity was calculated at 20 degrees Centigrade, for 49, 64, 81 and 100 rods per canister. The calculations were performed with a pitch of 8.50 and 8.875 inches. The resulting k-infinities are contained in Table 3-2 and illustrated in Figure 3-2. Note that the maximum k-infinity occurs at approximately 64 rods per canister, and is independent of the storage pitch. The shape of the k-infinity curve appears to be more peaked at the maximum value for the upper curve.

3.3.1.2 Maximum k-infinity

The maximum k-infinity for the storage baskets containing canisters filled with fuel rods from a 7X7 fuel bundle was determined by using the MERIT geometry model shown in Figure 3-3. The storage tube wall thickness and the canister wall thickness were both assumed to be a minimum. This is conservative since the mass of stainless steel, a neutron absorber, is reduced. The storage tube pitch was assumed to be 9.00 inches. This represents the maximum pitch including allowance for assembly tolerances. The nominal storage pitch is 8.875 inches. The maximum pitch was selected since this resulted in the maximum k-infinity for fuel bundle storage (Subsection 2.3.2.1). The fuel bundle storage k-infinity was slightly higher at 9.00 inches than it was at 8.75 inches (Figure 2-2).

The fuel rods in the canister are assumed to be spaced as far apart as possible, thereby removing any space for displacing of the array. This eliminates the need to analyze for eccentric positioning of the rod array. The nominal gap between the outside of the canister and the inside of the storage tube is only .0625 inch. Therefore, displacement for the purpose of calculating the effect on k-infinity are considered negligible.

The k-infinity with the optimum rod array was calculated at 20 degrees and at 100 degrees Centigrade. The maximum temperature is considered the worst case abnormal condition for this analyses. The results are shown in Table 3-4. The maximum k-infinity is less than the requirement to maintain k-effective less than 0.95.

Table 3-4 Optimum 7X7 Rod Storage Results

Temperature (^{o}C)	k-infinity (± 1σ)	Upper (95/95)
20	0.8492 ± 0.0025	0.8649
100	0.8861 ± 0.0033	0.9034

3.3.2 8X8 Rod Storage

The 8X8 rod type used in the criticality safety analyses was assumed to be 4.0 wt.% U-235, at the Uranium dioxide theoretical density. This enrichment conservatively bounds the as-built fuel rod enrichments including any allowance for fabrication tolerances.

3.3.2.1 Optimum Rod Array

The optimum number of fuel rods per canister were determined for the 8X8 rod types. The geometry model and analyses performed were analogous to those described in Subsection 3.3.1.1. The calculated k-infinity as a function of the number of fuel rods per canister is contained in Table 3-3 and illustrated in Figure 3-3. Since the fuel rods from an 8X8 fuel bundle are smaller

than from a 7X7 fuel bundle, the arrays contain more fuel rods. As a result, the optimum array of 8X8 fuel rod types was approximately 81 rods per canister compared to 64 for 7X7 fuel rod types.

3.3.2.2 Maximum k-infinity

The maximum k-infinity was calculated using the optimum rod array of 81 fuel rods per canister. The analyses was performed at 20 degrees and at 100 degrees Centigrade. The maximum temperature is considered the worst case abnormal condition for this geometry. The results are shown in Table 3-5. The maximum k-infinity meets the requirement to maintain k-effective less 0.95.

Table 3-5 Optimum 8X8 Rod Storage Results

Temperature (^{o}C)	k-infinity ($\pm$ 1σ)	Upper (95/95)
20	0.8969 $\pm$ 0.0026	0.9128
100	0.9217 $\pm$ 0.0033	0.9390

3.4 Application of Results

The results of the criticality safety analyses demonstrate that the storage of loose rods in sealed canisters meet the requirements to maintain k-effective less than or equal to 0.95. The analyses were performed very conservatively with the highest enrichment rod types, with no depletion, and stored in an optimum array. The results are applicable for any 7X7 and 8X8 rod types

fabricated by General Electric.

3.5 Conclusions

The storage of 7X7 and 8X8 fuel rod types of any quantity per storage container meet the requirement to maintain k-effective less than 0.95. The fuel rods can be from any fuel bundle fabricated by General Electric, at any exposure. The maximum calculated k-effective under abnormal storage conditions was equal to 0.903 for 7X7 rod types and 0.939 for 8X8 rod types at a 95% probability with a 95% confidence level.

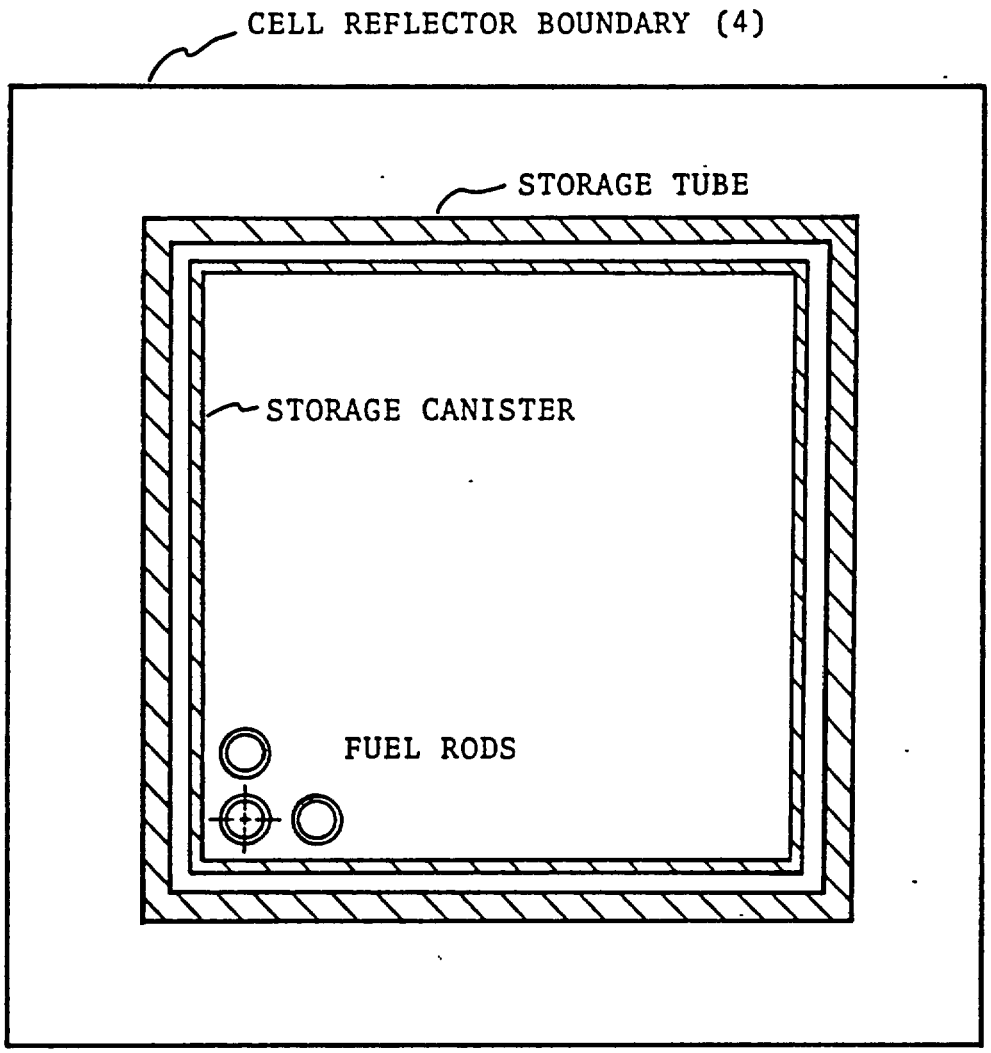

Figure 3-1 MERIT Model for Single Storage Cell Geometry

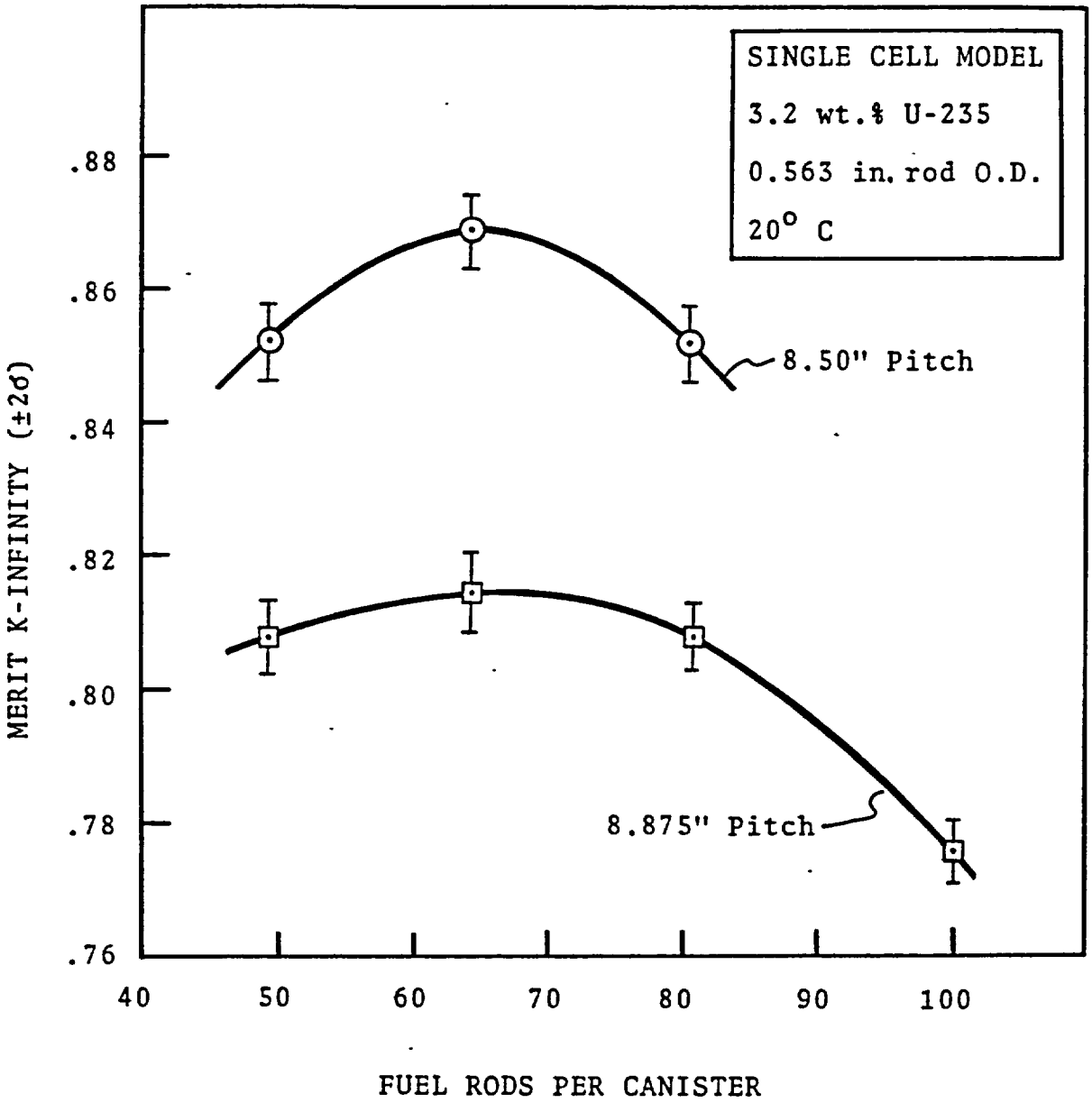

Figure 3-2 k-infinity as a function of 7X7 Fuel Rods Canister

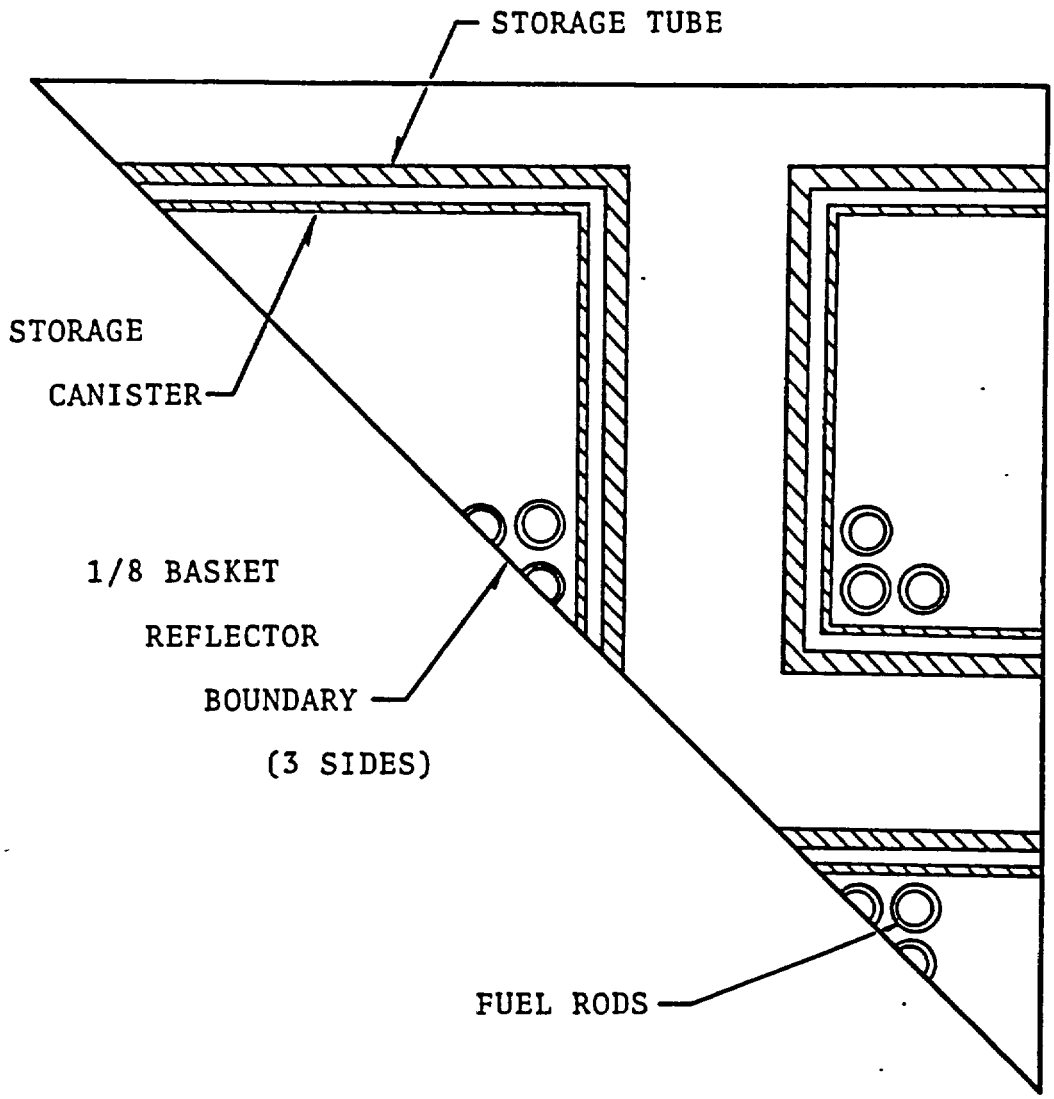

Figure 3-3 MERIT Model for Morris Basket with Rod Storage Canisters

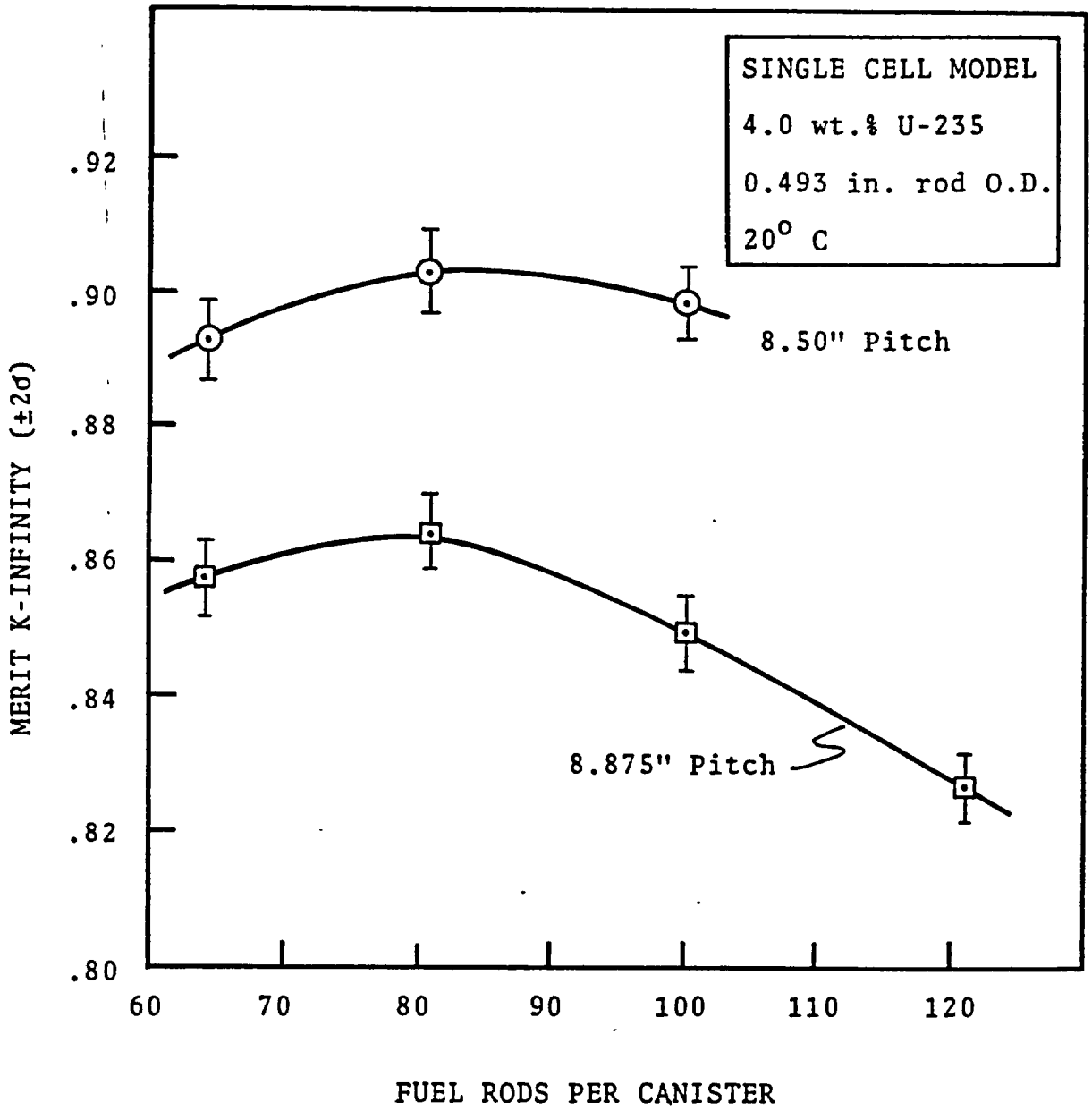

Figure 3-4 k-infinity as a Function of 8X8 Rods per Canister

4.0 REFERENCES

4-1 Battelle-Northwest report to R.G. Barnes, Criticality Safety Basis for the MFRP Project-1 Fuel Bundle Storage Baskets, May 1975.

4-2 General Electric Standard Application for Reactor Fuel, NEDE-24011-P-A, Latest NRC approved revision.

Appendix A

MERIT Monte Carlo Program

The MERIT program is a Monte Carlo program for solving the linear neutron transport equation as a fixed source or an eigenvalue problem in three space dimensions. This program is an improved version of the BMC Code (Reference 1). The cross sections in MERIT are processed from the ENDF/B library in the multigroup and resonance parameter formats (Reference 2). Thermal scattering in water is represented by the Haywood kernel obtained from the ENDF/B library. The MERIT program utilizes 190 full spectrum cross section energy groups. The types of reactions considered in MERIT are fission, elastic, inelastic and (n,2n) reactions. Absorptions are implicitly treated by applying the non-absorption probability to neutron weights on each collision.

The MERIT program has been thoroughly verified for programming, sampling procedures, particle tracking, random number generation, fission source distribution, statistical evaluation, resonance cross section evaluation, edits and other functions of the program. The overall performance of MERIT and the cross section data were evaluated by comparison against critical experiments which include:

1. Cross Section Evaluation Working Group (CSEWG) thermal reactor benchmark problems: TRX-1,TRX-2,ORNL-1,ORNL-2

2. Babcock and Wilcox Small Lattice Facility

3. Jersey Central Gamma Scan Experiments

4. BWR Gadolinia Critical Experiments

5. Battelle Critical Experiments with Fixed Neutron Poisons

6. Nippon Atomic Industrial Group (NAIG) Critical Experiments with BWR Control Rods

The analyses of these benchmark calculations indicate that the MERIT program underpredicts k-effective by approximately 0.5% for thermal reactor criticals when using ENDF/B-IV cross sections. The CSEWG evaluation of the ENDF/B-IV data concluded that the experiment is underpredicted by 0.5% for the high moderator-to-fuel ratio in water moderated uranium lattices (Reference 3). The MERIT results confirm the biases supporting the CSEWG conclusions (Reference 4).

References:

1. D. H. Thomas and T. M. Traver, "BMC-I: The Battelle Monte Carlo Code", BNWL-1433, June 1970

2. "Data Formats and Procedures for the ENDF Neutron Cross Section Library", BNL-50274(T-601), ENDF 102, Vol. 1, October 1970

3. E. M. Bohn et.al. (Ed), "Benchmark Testing of ENDF/B-IV", ENDF-230, Vol. I, March 1976

4. C. M. Kang and E. C. Hansen, "ENDF/B-IV Benchmark Analyses With Full Spectrum Three Dimensional Monte Carlo Models," paper presented in November 1977 at the winter San Francisco meeting of the American Nuclear Society, Vol. 22, p. 891.

Appendix B

95/95% Statistics

In order to establish the maximum calculated k-infinity, including all calculational biases and uncertainties, the guidelines contained in ANSI/ANS-57.7-1981, "Design Criteria for an Independent Spent Fuel Storage Installation (Water Pool Type)", was used. The maximum calculated k-infinity is equal to the following:

$$k(max) = k_{mc} + dk_{cb} + dk_{bu} + dk_{exp} + dk_{mcu}$$

where:

k_{mc} = Monte Carlo calculated k-infinity
dk_{cb} = Critical Benchmark Bias
dk_{bu} = Uncertainty in Critical Benchmark Bias
dk_{exp} = Uncertainty in Experiments
dk_{mcu} = Uncertainty in Monte Carlo calculation

The arithmetic mean eigenvalue for the 15 critical benchmark calculations performed with MERIT was 0.9949 ± 0.0022 (1σ) (Appendix A). The resulting critical benchmark bias is then 0.0051 delta-k. All of the k-infinity values contained in this report include the critical benchmark bias since this represents the best estimate k-infinity value for comparison to other methods of analyses.

The one sided 95/95% tolerance limit for the uncertainty in the Merit critical benchmark bias (dk_{bu}) is 2.566 sigma (1σ) for n = 15, or 0.0056.

The absolute value for the uncertainty in the benchmark experiments (dk_{exp}) was estimated to be 0.0030 at 1σ. This value

was reported as the maximum uncertainty in reproducing a critical experiment. The resulting one sided 95/95% tolerance limit is 1.645 sigma or 0.0049 delta-k.

Each of the Monte Carlo calculations were based on 50 batches of 1000 neutron histories. As a result, the one sided 95/95% limit of the uncertainty is equal to 2.065 σ, for n = 50. The value of σ is the uncertainty for the individual Monte Carlo calculation.

The uncertainty in the critical experiments is primarily in the measurement system, while the uncertainty in the critical benchmark bias is due to a combination of the measurement system and the neutron cross sections. As a result, the two uncertainties are not totally independent and are therefore combined linearly. The total linear combination of the one sided 95/95% tolerance limit on the uncertainty in the critical benchmark bias and the one sided 95/95% tolerance limit on the uncertainty in the benchmark experiments is 0.0105 delta-k. The linear addition of the 95/95% upper limit on the individual case uncertainty will result in the maximum calculated case k-infinity with 95/95% probability and confidence. An example of the statistical combination of the uncertainties and biased for Case 6 in Table 2-1 is shown in Table B-1.

Table B-1 Example of Combining Uncertainties
(Case 6 from Table 2-1)

Merit Monte Carlo k-infinity	.8148	
Calculational Convergence		± 0.0025 (1σ)
Critical Benchmark Bias	+ .0051	
Normal Reported k-infinity	.8199	± 0.0025 (1σ)
Benchmark Bias Uncertainty (95/95%)	.0056	
Experiment Uncertainty (95/95%)	.0049	
Calculational Convergence (95/95%)*	.0052	
Geometry Model Bias and Uncertainty	none	
Upper 95/95% k-infinity	.8356	

---

* 2.065 X .0025 = .0052

DISTRIBUTION

Name	M/C
N. J. Biglieri	771
B. F. Judson (2)	620
C. E. King	620
W. A. Pitt	735
R. K. Stitt	620 ✓
P. van Diemen	735
J. E. van Hoomissen	620
R. G. Damm	MOI
T. E. Ingels	MOI
J. D. Kesman	MOI
E. E. Voiland	MOI
J. B. Moegling	TVA

APPENDIX B.16

MORRIS SQUARE TUBE BASKET
STRESS REPORT

JUNE 1987

XL-T24-870062

MORRIS SQUARE TUBE BASKET STRESS REPORT

REVISION 0

R. J. Hill
W. H. Whitling

June 1987

TABLE OF CONTENTS

	PAGE
1. INTRODUCTION	2
2. DESIGN CRITERIA	2
2.1 Seismic Response Spectra	3
2.2 Allowable Stresses	5
2.3 Loads	6
3. DESIGN DESCRIPTION	7
3.1 Heavy BWR Baskets (Consolidated Fuel)	7
3.2 Light BWR Baskets (Standard Fuel)	7
3.3 Grid Structure	7
4. STRUCTURAL ANALYSIS	9
4.1 Heavy Basket Analysis Modelling & Analysis	9
4.2 Light Basket Modelling & Analysis	9
4.3 Grid Modelling & Analysis	17
4.4 Latch Analysis	30
4.5 Pit Gate Guard Analysis	34
4.6 Canister Lifting Device	34
5. CONCLUSIONS	34
6. REFERENCES	35
7. APPENDICES	
A1 Lifting Bail	A1-1
A2 Structural Properties	A2-1
A3 Pit Gate Guard Analysis	A3-1
A4 Consolidated Rod Canister	A4-1

1. INTRODUCTION

This report analyzes the square tube basket design shown in figure 2. These baskets will store either standard BWR fuel, or consolidated BWR fuel. Since the consolidated fuel analysis will envelope the standard BWR, that will be the only case analyzed.

There is a limit to the amount of consolidated fuel that can be stored without overloading the grid support system. This limit is 103 heavy (consolidated fuel) baskets and 312 light (regular fuel) baskets in the arrangement shown for these numbers in Figure 8.

This analysis uses BWR baskets of total weight 7625 lbs to be in the 312 light positions on the grid.

Any use of PWR baskets with standard fuel would not affect the conclusions of this report.

2. DESIGN CRITERIA

Only the relevant criteria affecting the feasibility of the increased loading schemes are listed here.

2.1. Seismic Response Spectra

The horizontal and vertical design response spectra curves are shown in Figure 1 and digitized for input into the response Spectra analysis, as shown in Table 1. The safe shutdown earthquake (SSE) is based on 5% damping and is considered as a factored loading condition as defined by the American Institute of Steel Construction (AISC) see Reference 5). The operating base earthquake (OBE) is defined as being half the SSE for rigid body motion and is considered as a normal operating condition by the AISC.

TABLE 1

	SSE		OBE	
FREQUENCY CPS	HORIZONTAL	VERTICAL	HORIZONTAL	VERTICAL
0.10	.01	.01	.0	.0
0.25	.10	.08	.04	.04
0.50	.18	.15	.11	.08
1.00	.35	.22	.20	.13
2.50	.68	.53	.43	.35
3.50	.65	.65	.41	.43
9.00	.58	.50	.35	.30
33.00	.20	.20	.10	.10
1000.	.20	.20	.10	.10

Figure 1

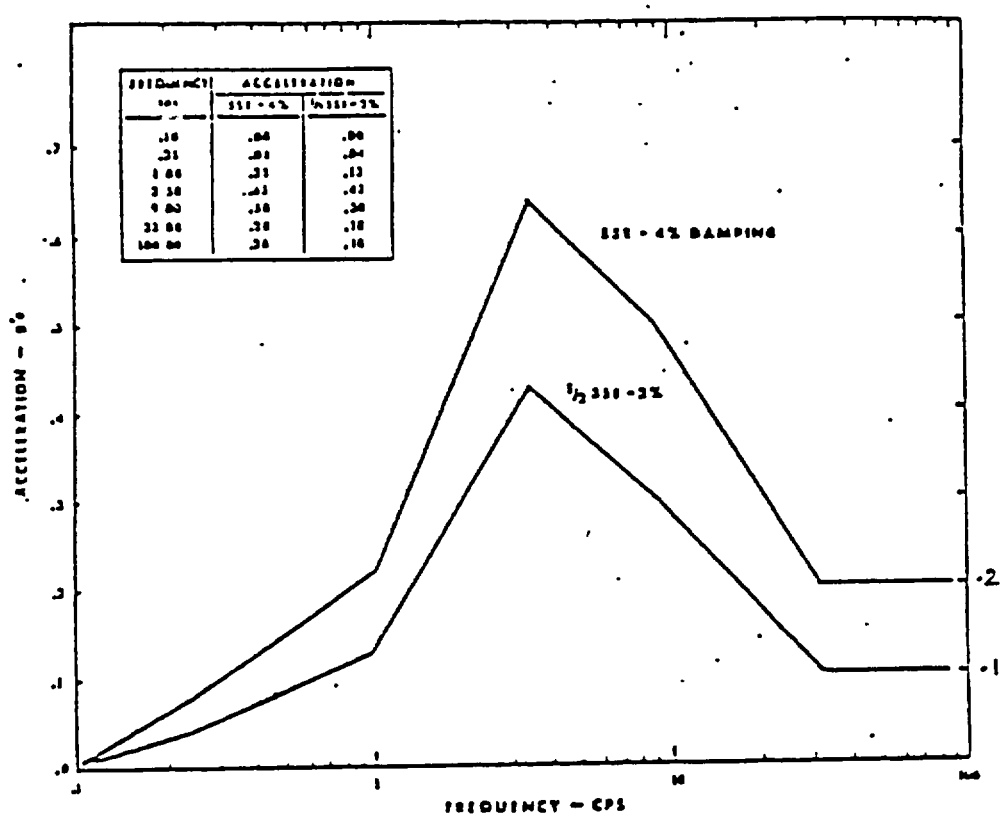

VERTICAL DESIGN RESPONSE SPECTRA FOR NUCLEAR POWER PLANTS

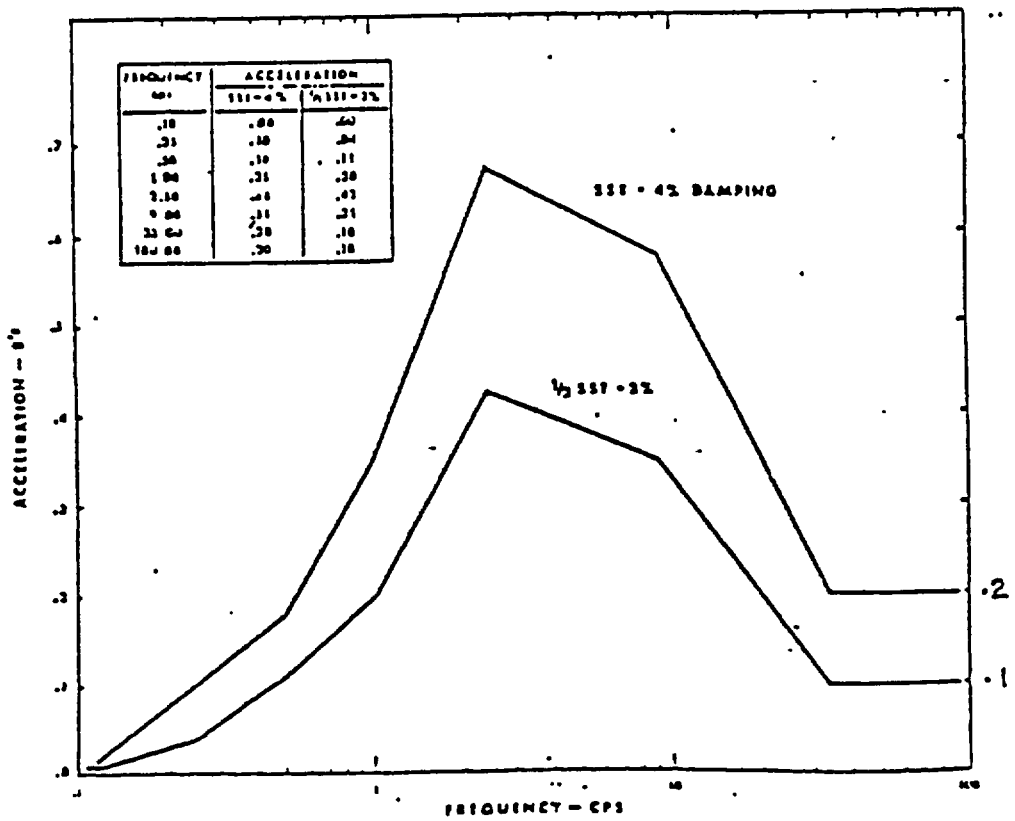

HORIZONTAL DESIGN RESPONSE SPECTRA FOR NUCLEAR POWER PLANTS

2.2 Allowable Stresses

All the material of construction is 304 stainless steel of various product forms. The yield strength for all is taken as 35ksi. The design rules and allowable stresses are based on Section 5 of Reference 4, Specification for Fabrication of Steel Buildings.

For normal service conditions (including the OBE) the allowable Stresses from Pf I of Reference 4, Section 5, are:

Tension → Ft = 0.6σy	= 0.6 (35) = 21	ksi
Near pinholes etc.	F_t = .45(35) = 16	ksi
Shear	F_v = .4 (35) = 14	ksi
Bending	F_b = .66(35) = 23.1	ksi
Bearing	F_{br}= .9 (35) = 32	ksi

For factored loads PtII of Reference 4, Section 5, allows an increase in allowable stresses to reflect the possibility of the material exceeding yield in bending providing that equilibrium is not jeopardized. This has been interpreted as a 50% increase in allowable stresses i.e. for the membrane stresses limit, this is extended from 0.6σy to 0.9σy.

Tension	F_t = 1.5 (21) = 31.5	ksi
Near pinholes	F_t = 1.5 (16) = 24	ksi
Shear	F_v = 1.5 (14) = 21	ksi
Bending	F_b = 1.5 (23.1) = 34.7	ksi
Bearing	F_{br}= 1.5 (32) = 48	ksi

For combined membrane (σm) and bending stresses (σb) the interaction limit must be satisfied

$$\frac{\sigma m}{F_t} + \frac{\sigma b}{F_b} \leq 0$$ For buckling limits-- See Pg 28

For components in the direct lifting load path

F_t = 1/5 σ_y = 7 ksi

F_v = 2/3 F_t = 4.7 ksi

2.3 Loads

The dry weight of the consolidated baskets is 13,790 lbs. as follows:

Fuel & cladding = 2 (605)	= 1210 lbs.	See Appendix
Basket tube	= 155.4 lbs.	pg. A2-3
Fuel canister	= 100 lbs.	
	1465.4 lbs.	
Bottom plate $(25.87^2 \frac{(5)}{(8)}(.29))$	= 121.3 lbs.	
Stiffening plates $(4x4x24.145 \frac{1}{4}x.29)$	= 28.0 lbs.	See Figure 2
Miscellaneous plates, diagonal stiffeners, base attachments for a total basket weight of 2000 lbs.	= 452.1 lbs. - approximated	

Total wt. = 9x1465.4+121.3+28.0+452.1= 13,790 lbs.

(NOTE: The wt. used in the dynamics analysis is adjusted to include entrained water, hydromass and bouancy effects. These are different for vertical and horizontal motions. See Appendix A2).

The dry weight of the standard basket with fuel is 7625 lbs. (See Appendix A2).

3. DESIGN DESCRIPTION

3.1 Consolidated Fuel (Heavy) Baskets

The drawings used were:

C6221
17988-E - Rev. 1
17973-D - Rev. 1
17992-D - Rev. 1
17993-D - Rev. 3
17988-E - Rev. 1
17994-B - Rev. 1

3.2 Standard Fuel (Light) Baskets.

The drawings used were:

17988-D	Rev. 6
18114-D	Rev. 3

3.3. Grid Structure

The drawings used were:

17977-D	Rev. 4
18063-D	Rev. 4 Sheets 1 & 2
18107-D	Rev. 2
18109-D	Rev. 5 Sheet 1

Figure 2

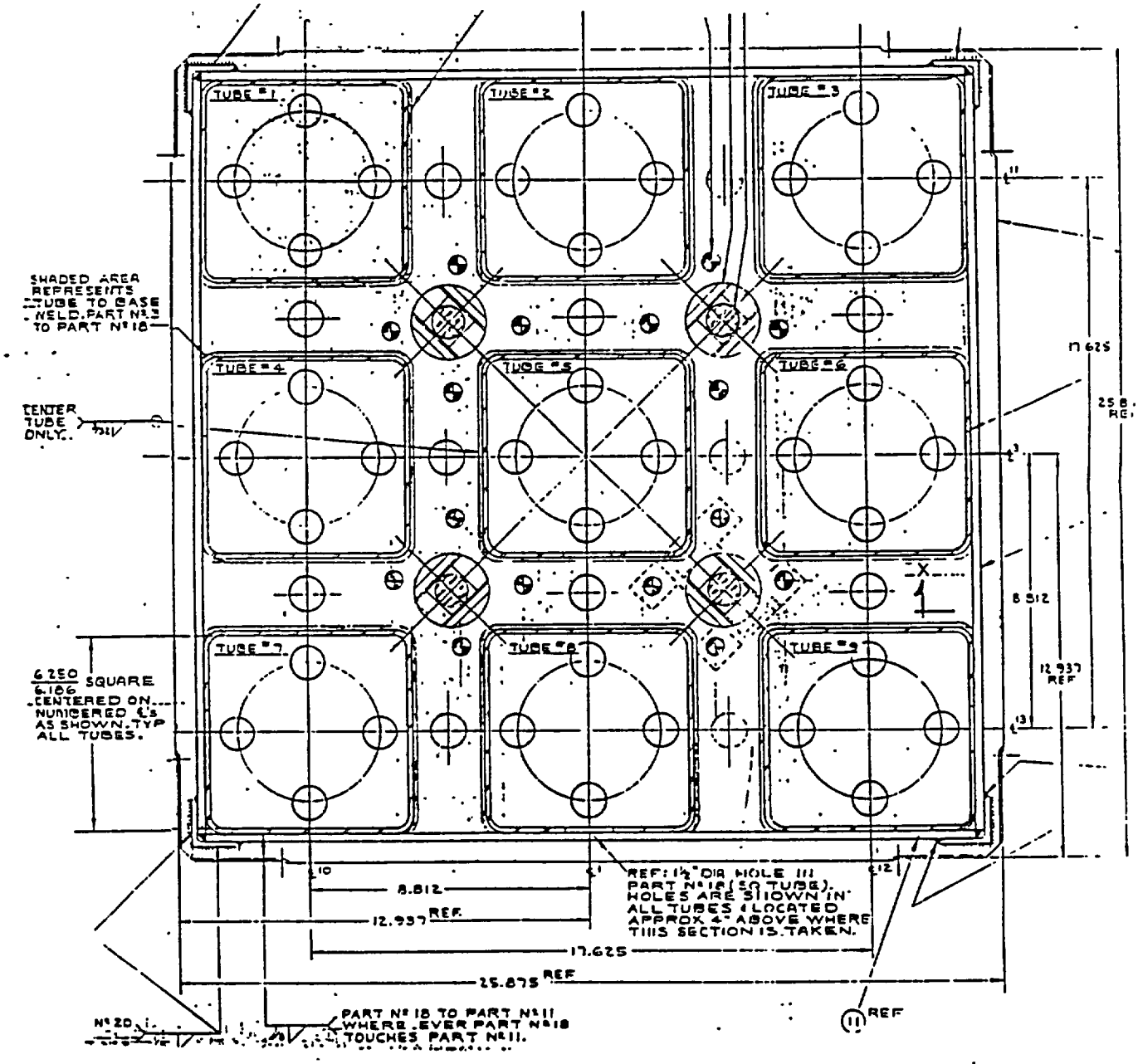

Extracted from DWG # CG221-17993-L REV 3

4. STRUCTURAL ANALYSIS

4.1 Heavy Basket Modelling and Analysis*

The basket is modelled as a collection of beams and shell elements. These are shown in Figures 3 and 4. The stiffness and density value for these elements are given in Appendix A2.

A response spectra analysis was done using the ANSYS finite element computer code with the stiffnesses and weights given in Appendix A2 as base line. The stiffness of the grid attachment is several orders of magnitude higher than the basket support plate and therefore a decoupled analysis of the basket is justified. The significant mode shapes were animated on the Textronix machine and showed that horizontal motion induced bending was the predominant mode shape as expected. The lowest significant frequency for the design was 4.7 hz.

4.2 Light Basket Modelling and analysis

The basket is modelled again as a collection of beams and shell elements as shown in Figures 5 and 6. The stiffness and density values are also given in Appendix A2, based on a basket dryweight of 7625 lbs. The analysis of this basket shows that the critical area shifts from the base plate (with the plate beneath the tubes acting as a rigid plate) to the tubes themselves acting as cantilevers. The lowest significant frequency for the light basket design is 11.2 hz. thereby increasing the loads on the grid from the PWR basket analysis where the lowest natural frequency was 17.3 hz.

*These heavy baskets are an updated version of those analyzed in Ref. 7.

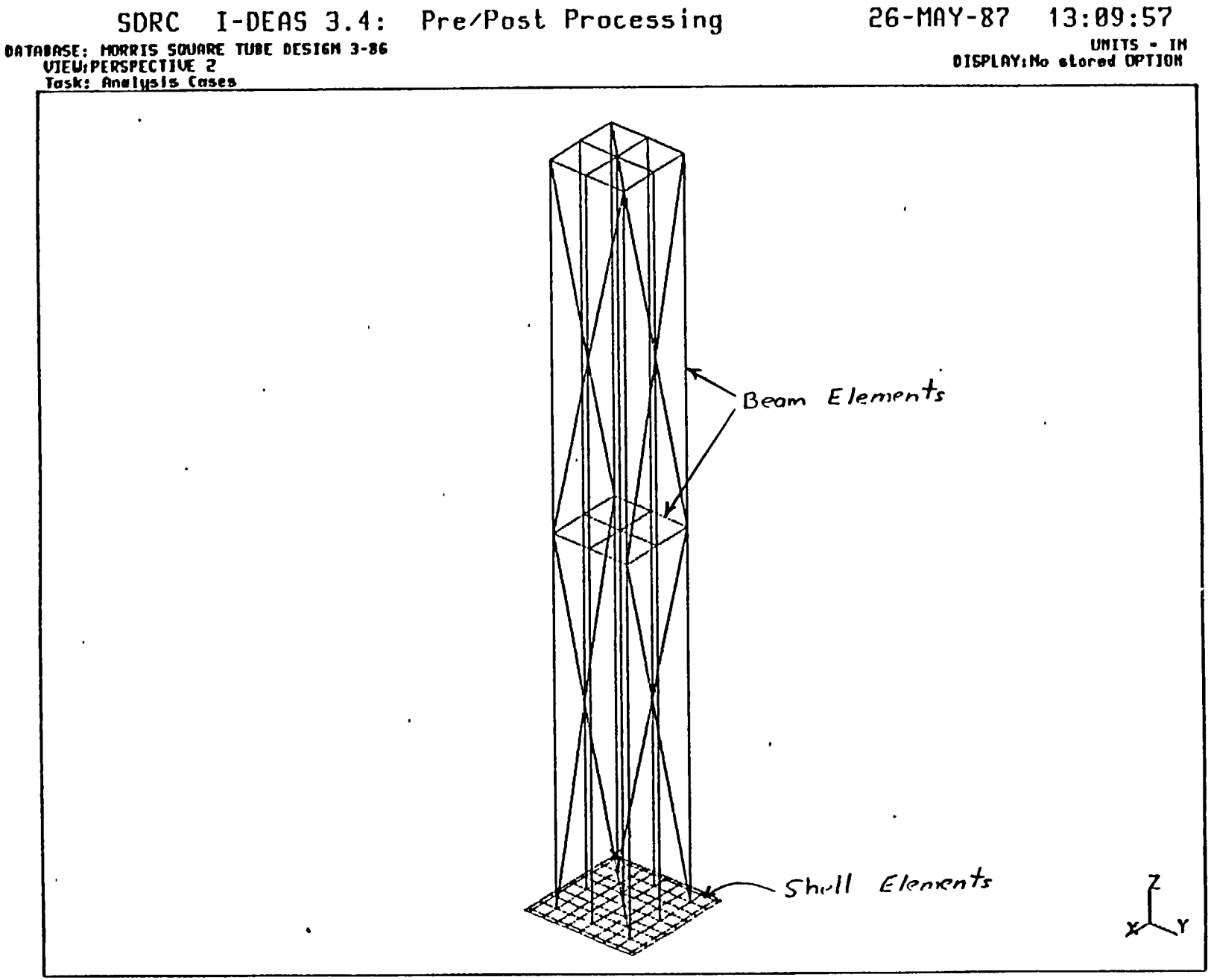

Figure 3

HEAVY BASKET MODEL

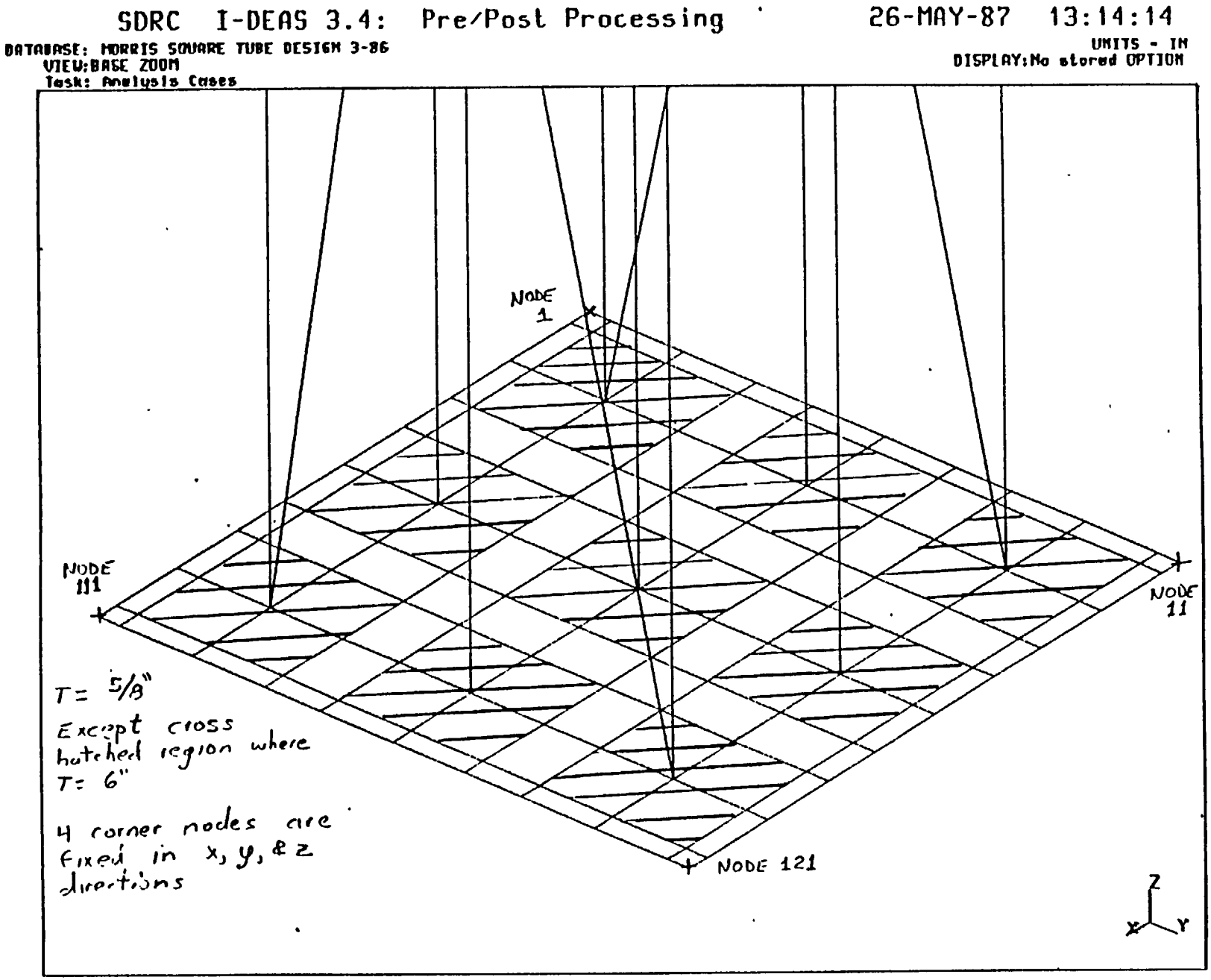

Figure 4

HEAVY BASKET MODEL

SDRC I-DEAS 3.4: Pre/Post Processing 12-NOV-86 09:21:29

DATABASE: MORRIS BWR BASKET 7625 LBS
VIEW:FULL MODEL
Task: Model Preparation

UNITS - IN
DISPLAY:No stored OPTION

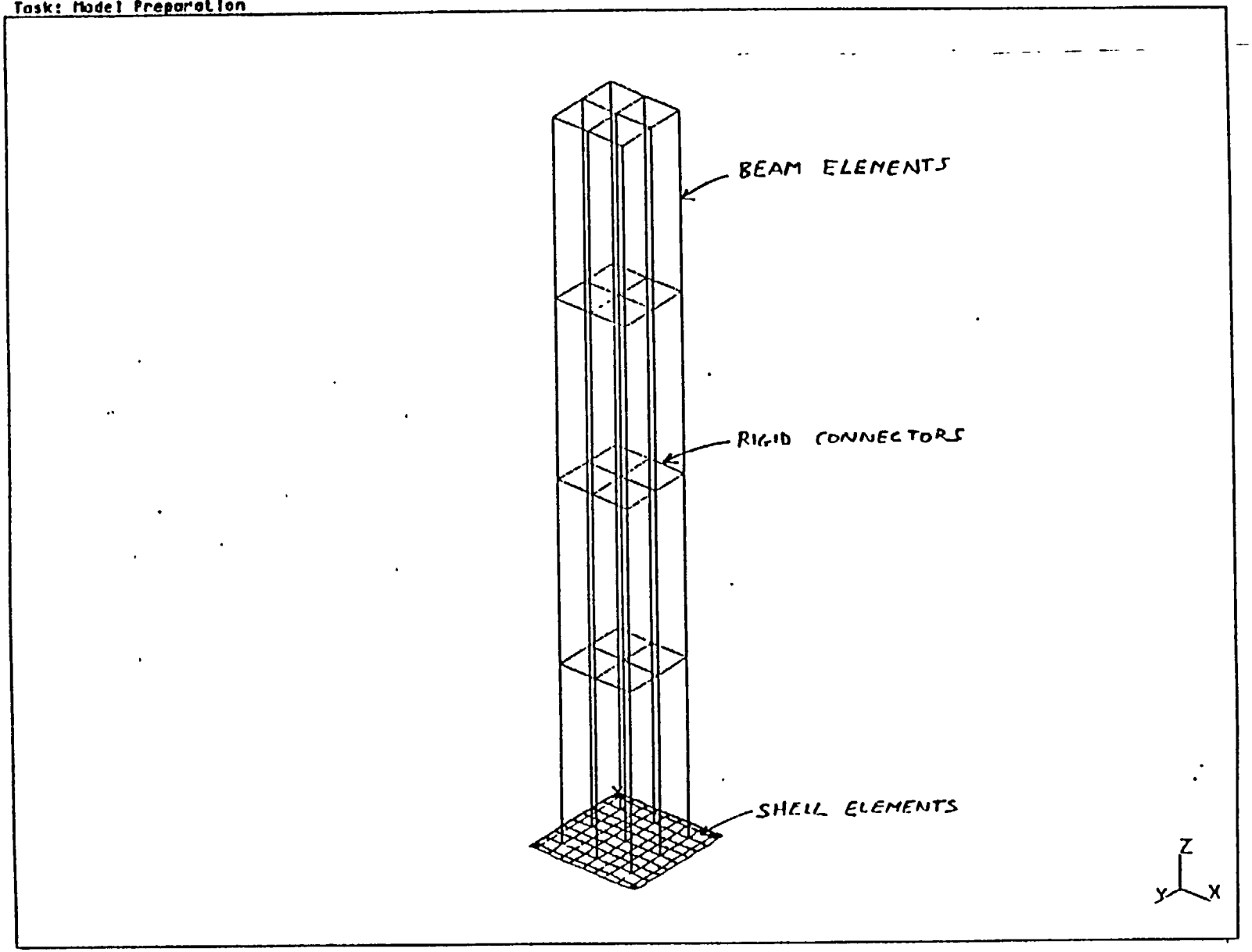

LIGHT BASKET MODEL

Figure 5

SDRC I-DEAS 3.4: Pre/Post Processing 11-NOV-86 15:36:55

DATABASE: MORRIS BWR BASKET 7625 LBS
VIEW:FULL MODEL BASE ZOOM
Task: Model Preparation

UNITS - IN
DISPLAY:No stored OPTION

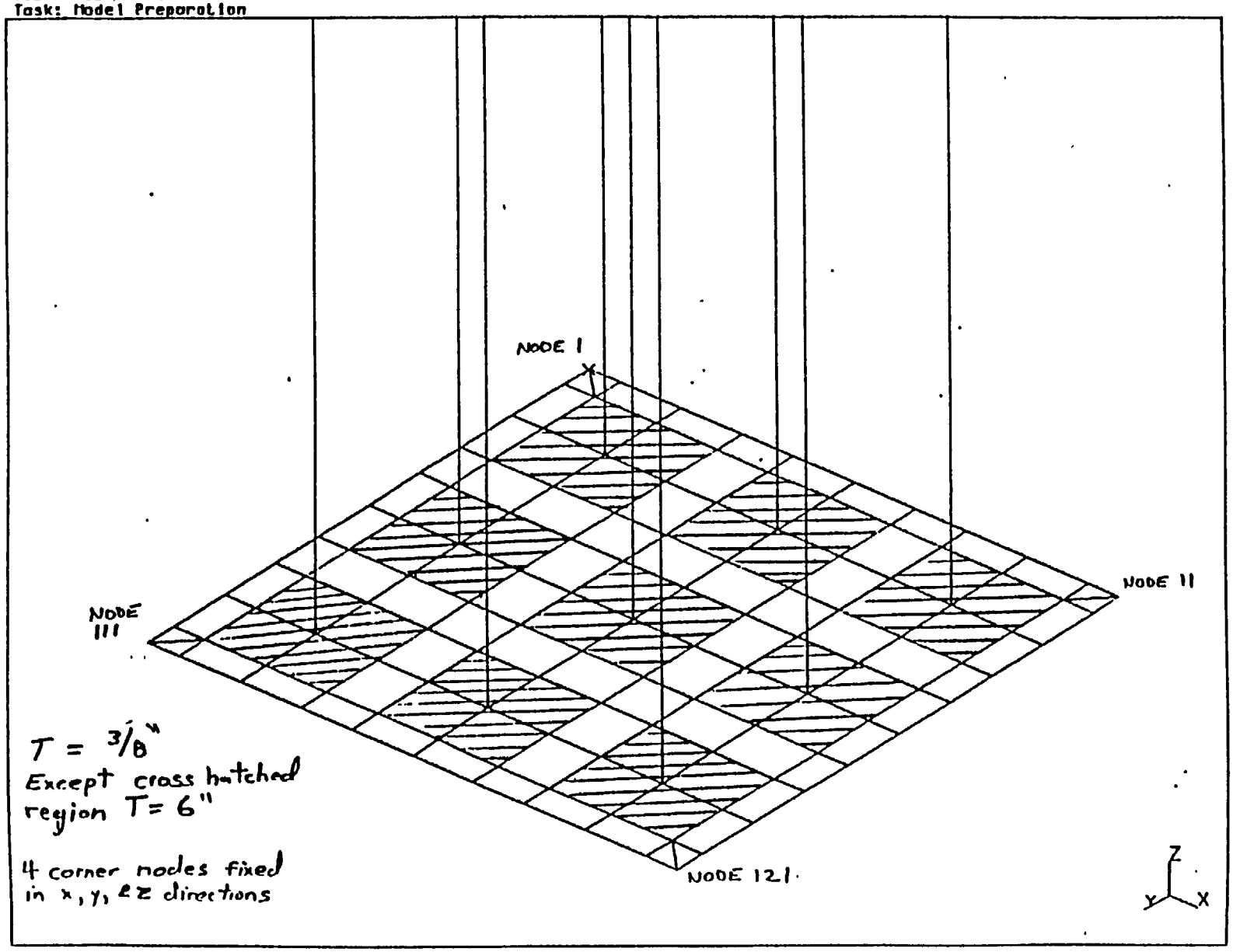

Figure 6

LIGHT BASKET MODEL

TABLE 3

RESULTS FOR LIGHT BASKETS

MODE	FREQ.
1	11.2 Hz
2	11.2 Hz
7	105.1 Hz

BASKET WEIGHT = 7625 lbs

DEAD WEIGHT = SUBMERGED WEIGHT
= DRY WEIGHT - DISPLACED WATER
= (7625) - (93.4)(9) = 6784 lbs

DEAD WEIGHT PER POST = (6784)/4 = 1696 lb

MODE # *	EARTHQUAKE DIRECTION	FORCES IN LBS. MODE 1/ F_x	F_y	F_z	MODE 2/ F_x	F_y	F_z	TOTAL F_x	F_y	F_z
1	X	504	528	5155	233	37	1288	737	565	6443
	Y	730	764	7460	161	26	891	891	790	8351
	Z	—	1	407				—	1	407
TOTAL (SRSS)								1156	971	10555
F_H								1510		
11	X	26	162	940	761	724	7351	787	886	8291
	Y	38	234	1360	526	500	5081	564	734	6441
	Z	—	—	409				—	—	409
TOTAL (SRSS)								968	1150	10507
F_H								1503		
111	X	26	163	943	761	728	1480	836	891	8423
	Y	38	236	1365	526	503	5171	564	739	8536
	Z	2	1	423				2	1	423
TOTAL (SRSS)								1008	1158	12000
F_H								1535		
121	X	504	529	5152	233	40	1421	737	569	6573
	Y	729	765	7456	161	28	983	890	793	8439
	Z	—	1	408				—	1	408
TOTAL (SRSS)								1156	976	10705
F_H								1513		

* SEE FIGURE 3

AVERAGE F_H = 1515 lbs AVERAGE F_V = 10942 ± 1696 lbs
= 12638 lbs (DOWN)
= 9246 lbs (UP)

TABLE 4

RESULTS FOR HEAVY BASKETS

MODE	FREQ
1	4.73
2	4.74
6	3.41

BASKET WEIGHT = 13790 lbs
DEAD WEIGHT = SUBMERGED WEIGHT
= DRY WEIGHT - DISPLACED WATER
= (13790) - (169.2)(9) = 12267 lbs

DEAD WEIGHT PER POST = (12267)/4 = 3067 lbs

MODE # *	EARTHQUAKE DIRECTION	MODE 1/6 F_x	MODE 1/6 F_y	MODE 1/6 F_z	MODE 2/ F_x	MODE 2/ F_y	MODE 2/ F_z	TOTAL F_x	TOTAL F_y	TOTAL F_z
		FORCES IN LBS.								
I	X				1201	699	11846	1201	699	11846
	Y	706	1219	12825				706	1219	12825
	Z	2	6.	430				2	6	430
TOTAL (SRSS)								1393	1405	17464
F_H								1977		
II	X				1279	707	11887	1279	707	11887
	Y	704	1133	12786				704	1133	12786
	Z	5	1	463				5	1	463
TOTAL (SRSS)								1460	1135	17464
F_H								1849		
III	X				1848	1263	12729	1848	1263	13729
	Y	1229	1799	12757				1229	1799	12757
	Z	4	13	487				4	13	487
TOTAL (SRSS)								2219	2198	18747
F_H								3123		
121	X				1728	1242	13688	1728	1242	13688
	Y	1256	1908	12799				1256	1908	12799
	Z	9	5	478				9	5	478
TOTAL (SRSS)								2136	2277	18746
F_H								3122		

* SEE FIGURE 3

AVERAGE F_H = 2518 lbs AVERAGE F_V = 18105 ± 3067 lbs
= 21172 lbs (DOWN)
= 15038 lbs (UP)

4.1 and 4.2 Results

The corner nodes of the basket model interface with the support grid; therefore, it is necessary to evaluate the reaction loads at these locations for input to the grid analysis. These results are shown in Tables 3 and 4. Summarizing the results from Tables 3 and 4 the loads on each corner are given in Table 5.

TABLE 5

BASKET WEIGHT Lbs	HORIZONTAL FORCE Lbs	MAX DOWNWARD FORCE Lbs	MAX UPWARD FORCE Lbs
7,625	1,515	12,638	9,246
13,790	2,518	21,172	15,038

These loads are input to the grid analysis. The internal stress levels in the basket were checked and found to be acceptable.

Tube to Base Plate Weld

The maximum horizontal force on the tube to base plate weld is ≃ 925 lbs.* The 3/32 weld is on at least 3 sides of the tube. The weld stress therefore is

$$\tau = \frac{925}{(3/32)(3)(.707)(6.5)} = .7 \text{ ksi} < 21 \text{ ksi}$$

*From computer output; heavy basket seismic, Element 111, Node 97, F_H = 652 lbs for x and y shakes therefore F_{total} = 922 lbs.

4.2 Grid Structure Analysis

4.2.1 Grid Modelling

Two segments of the support grid system were modelled as shown in Figure 7 for analysis using ANSYS. The section properties were as follows: (Dwg. 18107-D Rev. 2)

(1) Vertical support columns

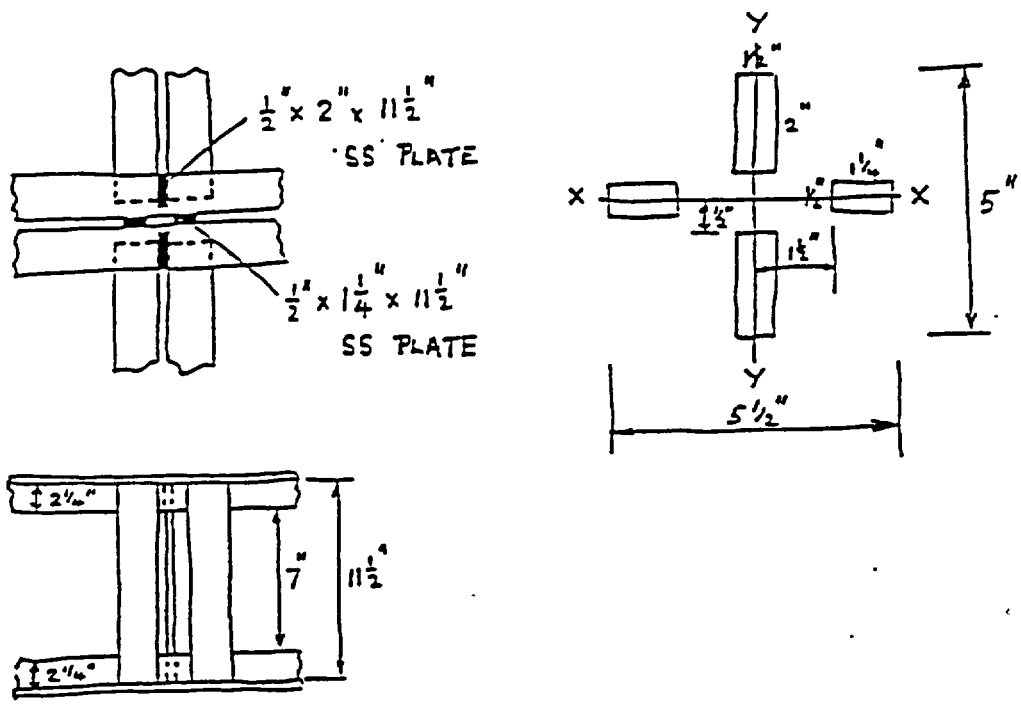

Area = 2(2x1/2) + 2(1-1/4x1/2) = 3.25 in^2

For full shear continuity (this was checked as a valid assumption using a test case ANSYS run)

$$I_{xx} = \left[\frac{\frac{1}{2}(2)^3}{12} + \frac{1}{2}(2)\,1.5^2 \right] x\,2 = 5.17\ in^4$$

$$I_{yy} = \left[\frac{\frac{1}{2}\left(1\frac{1}{4}\right)^3}{12} + \frac{1}{2}\left(1\frac{1}{4}\right)\left(1.5 + .625\right)^2 \right] x\,2 = 5.81\ in^4$$

A strut of length 12" was used in the grid model with constant properties A = 3.25 and I = 5.2. This is conservative.

(2) Diagonal struts

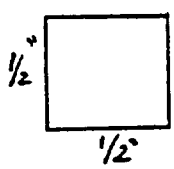

1/2"x1/2" SQ. SS BAR Area = 0.25 in^2

$$I = \frac{\frac{1}{2}\left(\frac{1}{2}\right)^3}{12} = .00521\ in^4$$

(3) Corner support posts

These are short and stiff. The properties were assumed as follows

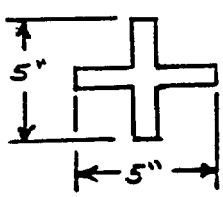

A = 9.0 in^2

I = 10.76 in^4

(4) Horizontal struts

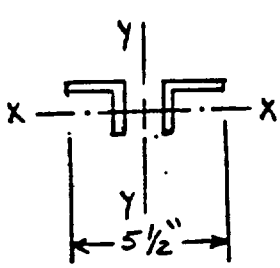

2 → 2-1/2"x2-1/2"x1/4" SS ANGLE

A = 2.375 in^2

I_{xx} = 1.406

I_{yy} = 3.628

SDRC__I-DEAS 2.5B: Model Creation 3-APR-86 16:24:20

MORRIS GRID ANALYSIS

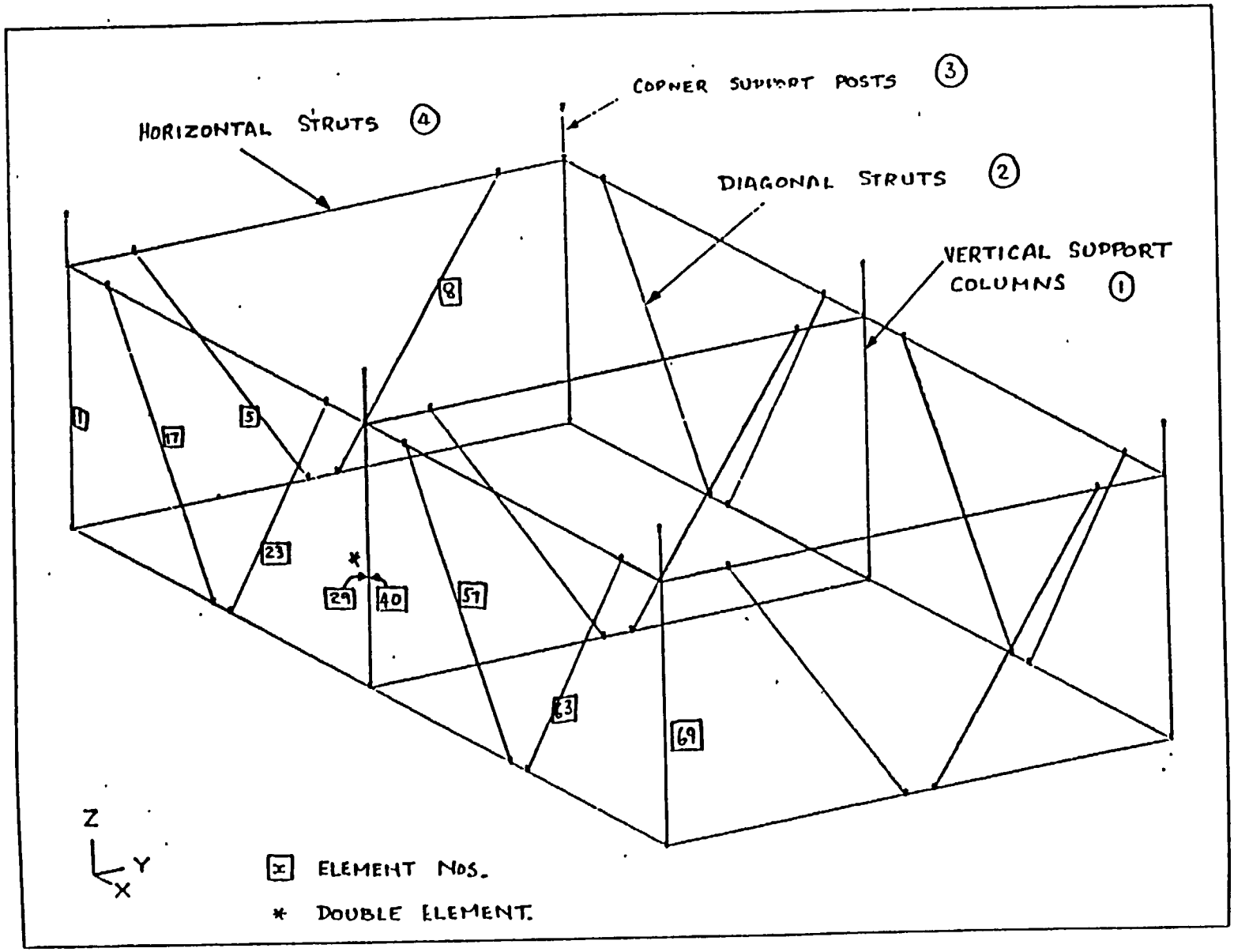

Figure 7
GRID MODEL

4.2.2. Grid Analysis

The horizontal and vertical forces given in Table 5 were applied to the grid system in combinations depending upon the earthquake directions (assuming the baskets act independently on the grid - conservative) and the combinations of basket weights. Basket weight combinations are required to give a realistic limit to the grid capacity since heavy baskets will be mixed with lighter baskets in any realistic storage arrangement.

The analysis assumes that 3 light baskets and 1 heavy basket are arranged as shown in Figure 8. On this basis 3 earthquake directions were considered to give 3 cases for each basket weight. These cases are shown in Figure 9.

The resulting stresses in the members for each of these cases and weights are shown in Table 6 for the vertical columns of the grid. The results for the diagonal struts are given in Table 8 and the results in the vertical columns in the edge of the grid for an accumulation of 18 sliding grid sections in Table 7.

The grid analysis assumes that the lower side in contact with the pool liner does not slide, i.e., in the finite element analysis the lower grid nodes are considered fixed, except for the sliding analysis of Table 7.

For sliding to occur

$$\frac{W}{g}a_H > F \qquad \text{friction force}$$

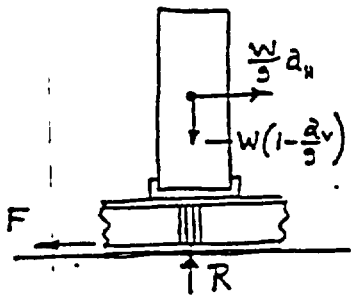

Now $F = \mu R$ when sliding is about to occur

$$R = W\left(1 - \frac{a_v}{g}\right)$$

$$\therefore \frac{W}{g}a_H > \mu W\left(1-\frac{a_v}{g}\right)$$

Where a_v = vertical acceleration
a_h = horizontal acceleration

$$\therefore \text{if} \quad \mu < \frac{a_H/g}{(1-a_v/g)}$$

then sliding could occur

(See pg 25)

VERTICAL COLUMN STRESSES (SSE)

BASKET TYPE *	RUN #	CASE #	ELEMENT # 1			ELEMENT # 29			ELEMENT # 40			PT II $\frac{\sigma_m}{F_a} + \sum \frac{\sigma_b}{F_b}$
			σ_m psi	σ_b psi	$\sigma_m+\sigma_b$ psi	σ_m psi	σ_b psi	$\sigma_m+\sigma_b$ psi	σ_m psi	σ_b psi	$\sigma_m+\sigma_b$ psi	
4L	1	A	10501	4092		14489	6360		14489	6360		
		B	11768	5277		1974	3307		1974	3307		
		C	14840	8552	23392	10541	2068		10541	2068		.65
3L 1H	2	A	12143	4757		16937	7417		16937	7417		
		B	13619	6131		2374	3854		2374	3854		
		C	17346	9072	26418	12190	2391		12190	2391		.74

TABLE 6

*Basket Types L - Light W = 7625 lbs.
H - Heavy W = 13790 lbs.

σ_m = Direct stress in colum -psi
σ_b = Maximum bending stress -psi
PT II of AISC allows $\sigma_b > \sigma_y$ for factored (SSE) loads.

$$\sigma_m \leqslant 0.9\ \sigma_y = 0.9 \times 35 = 31.5 \text{ ksi}$$
$$\sigma_b \leqslant 1.5\ (.9\sigma_y) = 47.3 \text{ ksi} \quad \text{PT II}$$

$$\frac{\sigma_m}{31.5} + \frac{\sigma_b}{47.3} \leqslant 1 \qquad \text{Pt II}$$

Figure 8

FUEL BASKET LOADING ARRANGEMENTS
IN BASINS 1 & 2 AT THE MORRIS OPERATION

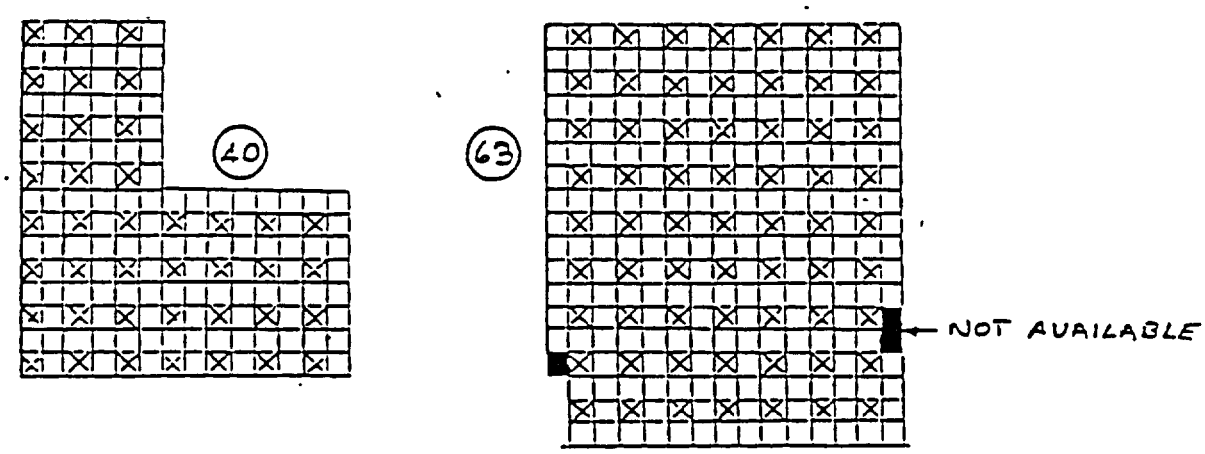

103 HEAVY BASKETS @ 13790 lbs
312 LIGHT BASKETS @ 7625 lbs

EARTHQUAKE COMBINATIONS APPLIED
TO SUPPORT GRID

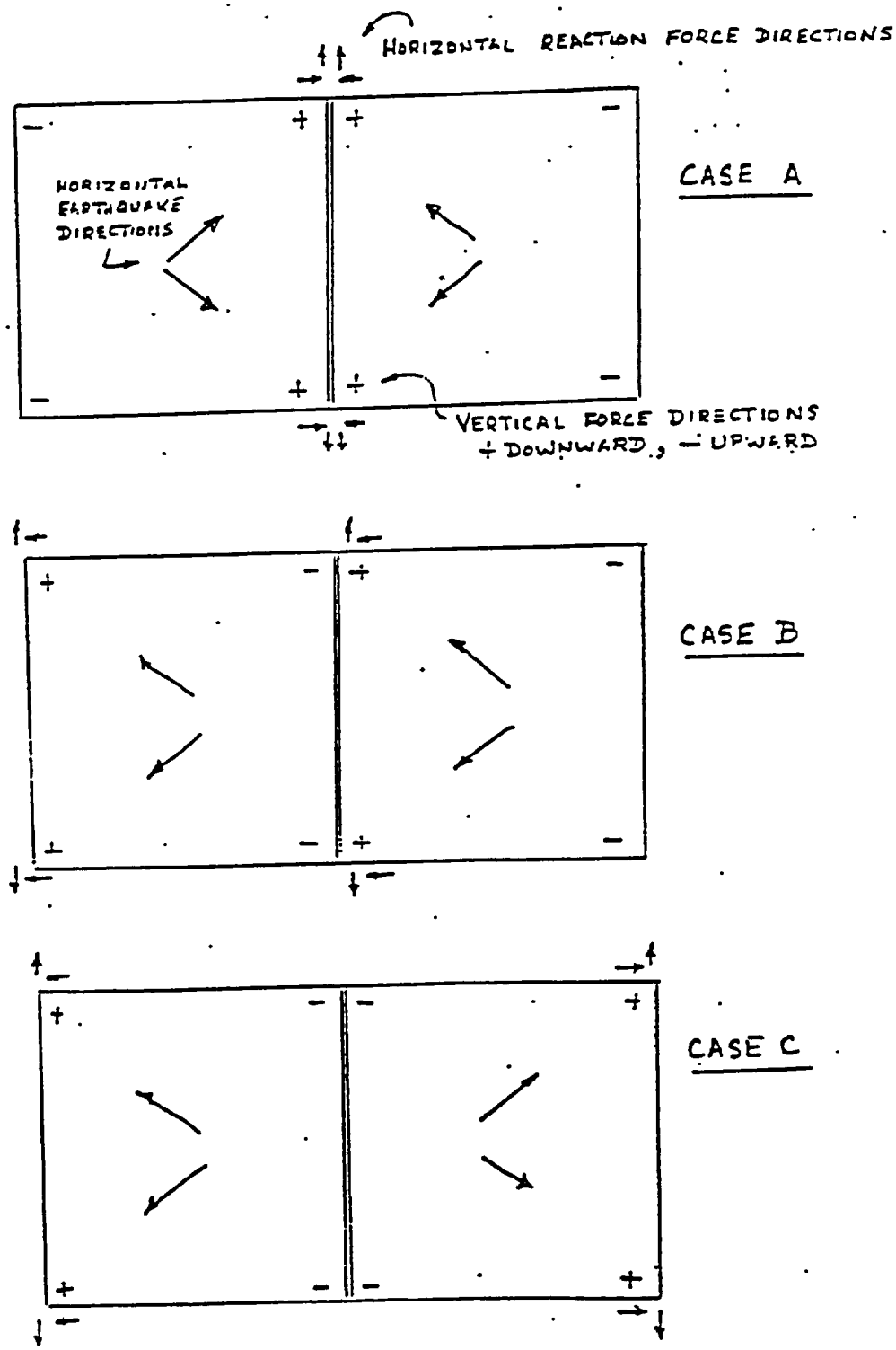

Figure 9

In the frequency range 5 to 12 hz $a_H = 0.60g$

$a_V = 0.2g$

$$\mu < \frac{.6}{.8} = .75$$

For wet steel on steel this is possible; therefore, the stresses in a "sliding" rack system were evaluated in order to check the cumulative effect of horizontal forces transmitted to the edge of the rack assembly. Two ANSYS runs were done with the following input:

Run #3

Horizontal force on basket support posts F_X = 1515 lbs.

Forces due to the vertical earthquake

ΣF_Z = 407 + 409 + 423 + 408 = 1647 lbs.

W = 7625 lbs. therefore R = 7625 -1647 = 5978 lbs.

} from TABLE 3

Assume the friction coefficient wet steel on steel μ=0.4

then μR = 0.4 (5978) = 2391 lbs.

Therefore the net horizontal force = 2 (1515) -2391 = 639 lbs.

For 18 rack assemblies, 16 of these horizontal forces are applied to the 2 rack model.

Therefore horizontal force applied to each post = $16 \times \frac{1515}{2}$ = 5112 lbs

Therefore F_X=2556 lbs. applied to top and bottom of rack.

These cumulative horizontal forces are combined with the overturing forces (non-cumulative) F_Z of Table 3.

Run #4

F_X = 2518 lbs.

ΣF_Z = 1858 lbs.

} Table 4

W = 13790 lbs. Therefore R = 13790 -1858 = 11932 lbs.

μR = .4 (11932) = 4773 lbs.

F_H = 2 (2518) - 4773 = 263 lbs.

F_X = 16 x 5424/2 = 2104 lbs. therefore

F_X = 1052 lbs. top and bottom

The results of the grid column stresses for these 2 runs 3, 4 are shown in Table 10.

The interaction limits for struts under factored loading conditions are taken from Section 2.4, Reference 5, Part 2 of Part 5. (See this reference for nomenclature.)

$P_{cr} = 1.7\ A\ F_a'$ $\quad A = 1/2 \times 1/2 = 0.25\ in^2$ & $\sigma_{cr} = F_a$

therefore

$\sigma_{cr} = 1.7\ F_a'$ $\quad$ Now $F_a' = 16.07$ ksi therefore $F_a = 27.3$ ksi

$F_b = 47.3$ ksi

The interaction limit for direct and bending stresses is

$$\frac{P}{P_{cr}} + \frac{C_m M}{\left(1 - \frac{P}{P_e}\right) M_m} \leq 1$$

which converts to

$$\frac{\sigma_m}{F_a} + \frac{C_m \sigma_b}{\left(1 - \frac{\sigma_m}{\sigma_e}\right) F_b} \leq 1$$

Cm = 0.06 para 1.6.1 See 5 Ref. 5

$$P_e = \frac{23}{12} A F_e'$$

$$F_e' = \frac{12 \pi^2 E}{23 \left(\frac{K \ell_b}{r_b}\right)^2}$$

VERTICAL COLUMN STRESSES (SSE)
IN EDGE GRID WITH ACCUMULATION
OF 18 SLIDING GRID SECTIONS

BASKET WEIGHT	RUN #	CASE #	ELEMENT # 69			$\frac{\sigma_m}{F_a} + \frac{\sigma_b}{F_b}$	
			σ_m	σ_b	$\sigma_m + \sigma_b$		
7625	3	C	15046	6955	22001	.62	$\leq .65$
3@ 7625 1@ 13790	3 & 4	C	17594	8083	25677	.73	$\leq .74$ ↑ FROM TABLE 6

LIMIT: $\frac{\sigma_m}{31.5} + \frac{\sigma_b}{47.3} \leq 1.0$ Pt II

TABLE 7

Since the interaction limits for a non-sliding base (Table 6) are higher than for the sliding grid the sliding grid will not be considered as the limiting condition.

The stresses in the diagonal struts are also examined for possible limits on basket weights. The results are contained in Table 8.

For K = 1.0 $\quad l_b = 10'' \quad r_b = .144''$

$$F_e' = \frac{12\,\pi^2\,28\,10^6}{23\,(69.4)^2} = 30{,}020 \text{ psi}$$

$$\therefore P_e = \frac{23}{12}(.25)\,30020 = 14385 \text{ psi}$$

$$\& \ \sigma_e = \frac{P_e}{A} = \frac{14385}{.25} = 57.5 \text{ ksi}$$

$$\therefore \frac{\sigma_m}{27.3} + \frac{0.6\,\sigma_b}{\left(1 - \frac{\sigma_m}{57.5}\right)47.3} \leq 1.0$$

This is the interaction equation.

From Table 8 For Run #1

$\sigma_m = 8213$ psi $\qquad \sigma_b = 1705$ psi

$$\frac{8213}{27300} + \frac{0.6\,(1705)}{\left(1 - \frac{8213}{57300}\right)47300} = .33 \leq 10 \ \therefore \text{OK!}$$

For Run #2

$\sigma_m = 13714$ psi $\qquad \sigma_b = 2826$ psi

$$\frac{13714}{27300} + \frac{0.6\,(2826)}{\left(1 - \frac{13714}{57300}\right)47300} = .55 \leq 1.0 \ \therefore \text{OK!}$$

STRESSES IN DIAGONAL STRUTS
(SSE)

The elements were reviewed and Element #57 was determined to have the maximum stress levels.

RUN #	CASE #	σ_m psi	σ_b psi	$\sigma_m + \sigma_b$ psi	$\frac{P}{P_{cr}} + \frac{C_m M}{\left(1-\frac{P}{P_e}\right) M_m} \leq 1$ *
1	A	6763	449	7212	
	B	8213	1705	9918	.33
	C	5203	249	5452	
2	A	11262	743	12005	
	B	13714	2826	16540	.55
	C	8533	407	8940	

* SEE PAGE 26

TABLE 8

Effective length of struts $\ell = 10''$

For a $\frac{1}{2}'' \times \frac{1}{2}''$ square section $r = .144''$

$\therefore \frac{K\ell}{r} = 69.4$ with $K = 1.0$. for secondary members.

$\therefore F_a' = 16.5$ KSI for $\sigma_y = 36$ KSI $\therefore F_a' = 16.5\left(\frac{35}{36}\right) = 16.07$ KSI Ref 5 Table 1-36 Section 5.

$\Sigma\sigma = \sigma_m + \overbrace{\sigma_{bx} + \sigma_{by}}^{\sigma_b}$ = combined stress from ANSYS

$\therefore \sigma_b = \Sigma\sigma - \sigma_m$ = total bending in corners of bar.

Since the interaction limits for the struts are less than those for the support columns, the columns will be the limiting member for basket weights.

The horizontal members are stressed lower than the diagonal struts and therefore these results are not recorded. The maximum horizontal force transmitted to the outer wall bracing can be accepted by the bracing components with a high margin of safety.

Summary:

The limiting components for basket loading are the vertical support columns under SSE loading.

The weight limits are:

103 heavy baskets at 13790 lbs.
312 light baskets at 7625 lbs. in the limiting arrangement as shown in Figure 8.

4.3 LATCH ANALYSIS

For components in the lifting load path

$F_t = 1/5\ \sigma_y = 1/5\ (35) = 7$ ksi tension

$F_y = 2/3\ F_t = 4.7$ ksi shear

Clevis: Dwg. C6221 - 17998-C

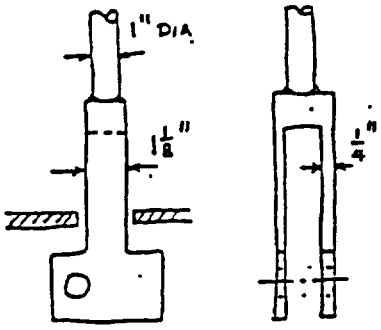

Rod: $A = \frac{\pi}{4}(1)^2 = .785 \text{ in}^2$

$$\sigma_R = \frac{13990}{.785}(1/4) = 4455 \text{ psi}$$

$< 7000 \therefore$ OK

Side straps:

$$A = 1\tfrac{1}{8} \times 1/4 \times 2 = .5625 \text{ in}^2$$

$$\sigma_S = \frac{13990}{.5625}(1/4) = 6218 \text{ psi}$$

$< 7000 \therefore$ OK

Add 200 lbs. to basket weight for entrained water

Basket baseplate:

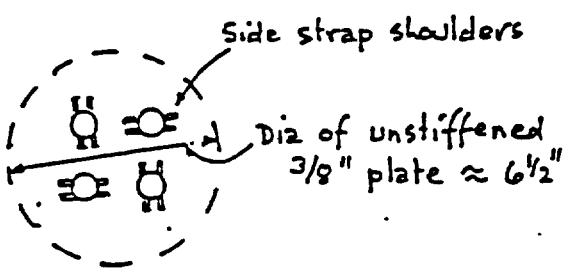

Assume load is centralized

W = 13790 lbs.

Approximate shear area

$= \pi\ (6.5)\ 3/8 = 7.66 \text{ in}^2$

Therefore shear stress

$\tau = 13790/7.66 = 1.83 \text{ ksi} < 4.7 \text{ ksi}$

therefore OK.

Latch bar: Dwg. C6221-17988-E Rev. 0

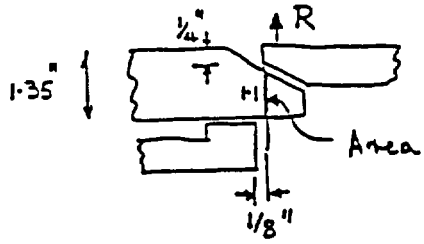

$A = 1.1 \times 1 = 1.1 \text{ in}^2$

Shear stress $\tau = \frac{R}{1.1} = .909\ R$

The maximum uplift force from the basket analysis, see Table 5, is 15038 lbs

Therefore max = .909 (15038)
= 13.7 ksi <21 ksi
therefore OK.

Bending moment

M = 1/8 R

$$\sigma_b = \frac{M}{I} y = \frac{1}{8} R \frac{(t/2)\,12}{(1)\,t^3} = \frac{R}{8}\frac{6}{t^2} = \frac{15038\,(6)}{8\,(1.1)^2} = 9.3 \text{ ksi} < 34.7 \text{ ksi} \therefore \text{OK}$$

Combined bending and shear

$$\tau_{max} = \sqrt{\frac{\sigma_b}{2}^2 + \tau^2} = \sqrt{\frac{9.3^2}{2} + 13.7^2} = 15.2 \text{ KSI} < 21 \text{ KSI} \therefore \text{OK}$$

Grid corner pocket: Dwg 17977-D

A = (.917x.5 -.125x.343/2.)x2-0.874 in^2

Weld area

$$= \underbrace{(.68 \times 2 + 1.5) \times 1/4}_{\text{GROOVE}} + \underbrace{2 \times 3/4 \times 1/4 \times .707}_{\text{FILLET}}$$

$$= .715 + .265 = 0.98 \text{ in}^2$$

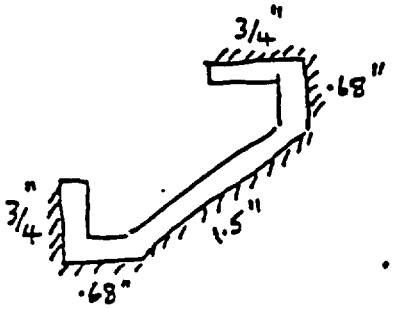

From the basket analysis - max horizontal force H = 2518 lb

$\therefore$ horizontal shear $\tau = 2518/.98 = 2.6$ ksi < 21 $\therefore$ ok

Tensile stress $\sigma = 15038/.98 = 15.3$ ksi < 31.5 $\therefore$ ok

Outer guide: Dwg. C6221-17988-E

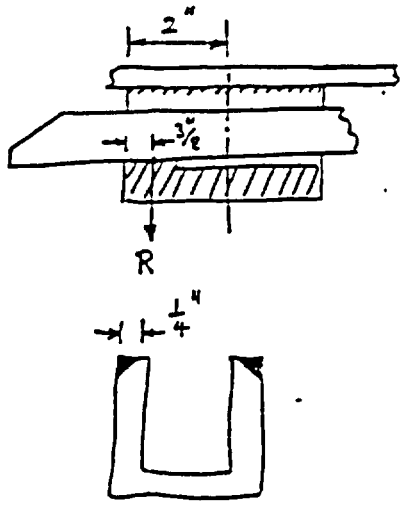

Bending moment on guide

$$M = (2 - .375)R = 1.625R$$

Weld area = 4x1/4x2 = 2.0 in^2 (groove)

$$I = bh^3/12 = 2(1/4)(4)^3/12 = 2.67\ in^4$$

$$Z = \frac{I}{h/2} = 2.67/2 = 1.335\ in^3$$

Direct stress on weld $\sigma_m = R/2.0$

$$\sigma_m = 15038/2.0 = 7.5\ ksi < 31.5\ ksi \therefore ok$$

Bending stress ; —— $\sigma_b = \frac{M}{Z} = \frac{1.625(15038)}{1.335} = 18.3\ ksi < 34.7\ ksi \therefore ok$

Interaction ; —— $\frac{\sigma_m}{31.5} + \frac{\sigma_b}{34.7} \leq 1.0$

$$\therefore \frac{7.5}{31.5} + \frac{18.3}{34.7} = .77 < 1.0 \therefore OK$$

Lifting bails: BWR baskets - See Appendix A1

4.5 Pit Gate Guard Analysis (See Appendix A3)

4.6 Canister Lifting Device (See Appendix A4)

5. CONCLUSIONS

103 heavy baskets weighing 13790 lbs. and 312 light baskets weighing 7625 lbs. can be installed on the Morris grid in basins 1 and 2 in the limiting arrangement shown in Figure 8. This is based on AISC limits for the factored loading of the SSE.

The lifting bails are capable of lifting the 13790 lbs basket.

6. REFERENCES

1. "BWR Spent Fuel Storage Option," J. D. Kesman and E. E. Voiland to J. E. Van Hoomissen (Sept. 4, 1985).

2. "Engineering Requirements for Consolidation of BWR Fuel at the Morris Operation," J. D. Kesman to C. King (Nov. 7, 1985).

3. "Feasibility of Increased Fuel Storage Loads at the General Electric Morris Operation," R. J. Hill, W. H. Whitling, April 1986 XL-610-86090.

4. Telecopy Transmission 9/15/86 R. J. Hill/W. H. Whitling to J. D. Kesman, Morris Operation (See Appendix 1 of this Report).

5. American Institute of Steel Construction (AISC) Handbook. 7th Edition (1970).

6. Private Communication, W. C. Wheadon to W. H. Whitling (March 1986).

7. "Feasibility of Increased Fuel Storage Loads at the General Electric Morris Operation," R. J. Hill, W. H. Whitling, November 1986, XL-610-86336.

COMPUTATION/RECORD SHEET

PREPARED BY: R. Hall	GENERAL ELECTRIC	PAGE NO. A1-1
CHECKED BY: [illegible]	NUCLEAR SYSTEMS TECHNOLOGY OPERATION	
DATE: 4/7/87	TITLE: LIFTING BAIL	

LIFTING BAIL – DWG # C6221-18114-D REV 0
LIFTING ROD DWG # C6221-17999-B REV 0

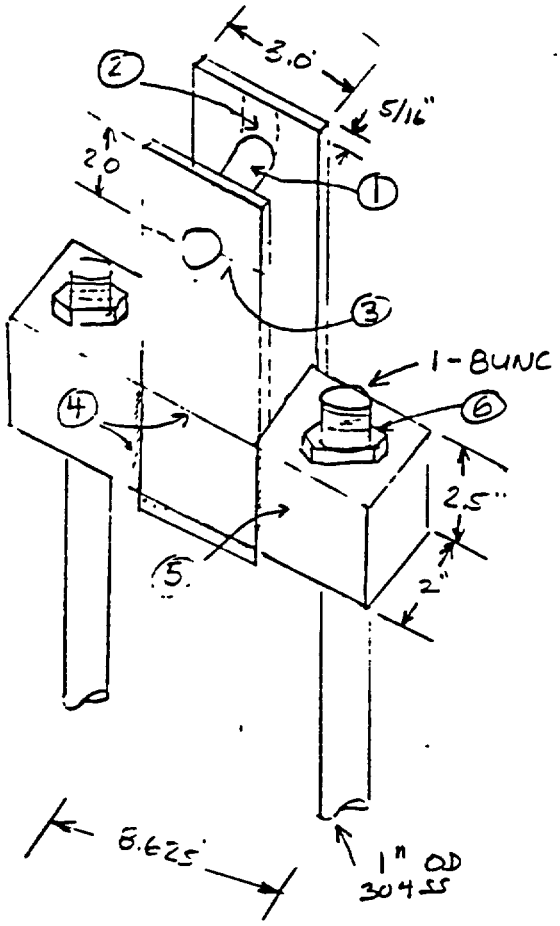

THERE ARE 6 LOCATIONS TO ANALYZE.

W = 7000 lbs (see below)

(1) THE PIN 1" OD 17-4 PH COND H-1100 OR H-1150, R32-36

AREA OF PIN = $\frac{\pi}{4}(1)^2 2 = 1.571$ in²

$\tau = \frac{7000}{1.571} = 4456$ psi

(2) TEAR OUT AREA

$= (2.0)(5/16)(4) = 2.5$ in²

$\tau = \frac{7000}{2.5} = 2800$ psi

(3) TENSILE AREA - MINIMUM AT HOLE

AREA $= (2)(3-1)(5/16) = 1.25$

$\sigma = \frac{7000}{1.25} = 5600$ psi

(4) WELD AREA

$= [(4)(3)(.25) + (.25+.312)(4)(2.5)]$ 707

$= 6.09$ in²

$\tau = \frac{7000}{6.09} = 1149$ psi

THERE A 2 BAILS FOR EACH BASKET SO THE WEIGHT LIFTED IF 7000 lbs EACH (14,000 lbs TOTAL BASKET WEIGHT)

(6) 1-8UNC THREADED ROD

$A_T = .606$

$\sigma = \frac{3500}{.606} = 5776$ psi

(5) BENDING MOMENT

$= \frac{7000}{2}\left(\frac{8.625}{2}\right) = 15094$ in-lbs

$I = \frac{bh^3}{12} = \frac{2(2.5)^3}{12} = 2.60$

$\sigma = \frac{15094(1.25)}{2.26} = 8348$ psi

COMPUTATION/RECORD SHEET

PREPARED BY:	GENERAL ELECTRIC	PAGE NO:
CHECKED BY:	NUCLEAR SYSTEMS TECHNOLOGY OPERATION	
DATE: 4/7/87	TITLE: LIFTING BAIL	

STRESS LIMITS

FOR COMPONENTS IN THE LIFTING LOAD PATH

$F_t = 1/5\ \sigma_y$

$F_y = 2/3\ F_t = 2/15\ \sigma_y$

FOR THE 304 SS COMPONENT

$F_t = 1/5\ (35{,}000) = 7{,}000$ psi Tension

$F_y = 2/3 \cdot 7000) = 4{,}700$ psi Shear

FOR THE 17-4 PH PIN

$\sigma_y = 105{,}000$ psi (FOR H-1150 HEAT TREATMENT)

$F_t = 1/5\ 105{,}000 = 21{,}000$ psi Tension

$F_y = 2/3\ 21{,}000) = 14{,}000$ psi Shear

STRESS SUMMARY

AREA	1	2	4	3	5	6
STRESS	4456	2800	1149	5600	8348	5776
ALLOWABLE	14000	4700	4700	7000	10500	7000
MARGIN	.32	.60	.24	.80	.80	.83

ALL MARGINS ARE $\leq$ 1.0 THEREFORE ALL AREAS ARE OK!

COMPUTATION/RECORD SHEET

PREPARED BY: R J Hall	GENERAL ELECTRIC NUCLEAR SYSTEMS TECHNOLOGY OPERATION	PAGE NO: A2-1
CHECKED BY: [illegible]		
DATE: 6/12/87	TITLE:	

STRUCTURAL PROPERTIES

SQUARE TUBE (BEAM PROPERTIES) DWG # C6221-17994-B REV. 1

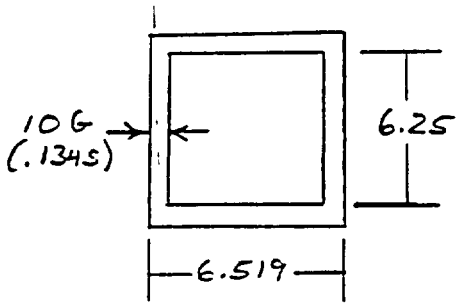

$A = 6.519^2 - 6.25^2 = 3.435 \text{ IN}^2$

$I = \frac{6.519^4 - 6.25^4}{12} = 23.35 \text{ IN}^4$

FOR A HOLLOW RECTANGLE $(a \times b, t, t_1)$ (ROARK 4th ED) TABLE II,

TORSIONAL MODULUS $J = \frac{2tt_1(a-t_1)^2(b-t_1)^2}{at + bt_1 - t^2 - t_1^2}$

FOR A HOLLOW SQUARE
$A = b$ & $t = t_1$ $\therefore$ $J = t(a-t)^3$

$\therefore J = .1345(6.519 - .1345)^3 = 35.0 \text{ IN}^4$

GUIDE PLATE (BEAM PROPERTIES) DWG # C6221-17988-E REV. 1

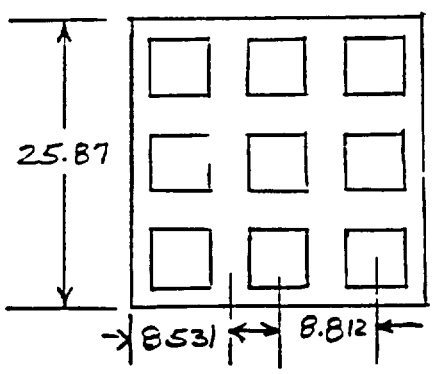

AT THE MIDHEIGHT AND TOP OF THE BASKET, THERE ARE 3/16" THICK GUIDE PLATES. THESE ARE REPRESENTED AS AS BEAMS RUNNING FROM THE CENTER TO CENTER.

$A = (8.627)(.1875) = 1.60 \text{ IN}^2$

$I_x = 8.627\frac{(.1875)^3}{12} = .0047 \text{ IN}^4$

$I_y = .1875\frac{(8.627)^3}{12} = 9.70 \text{ IN}^4$

$J = \frac{\pi}{32}(.1875)^4 = .000121 \text{ IN}^4$

BOTTOM PLATE (SHELL ELEMENT)

THIS IS REPRESENT BY SHELL ELEMENTS OF THICKNESS

$T = 5/8"$ OUTSIDE OF THE SQUARE TUBES

$T = 6"$ UNDERNEATH THE SQUARE TUBES. THIS IS A ARBITARY VALUE INDICATING A RIGID PLATE UNDER THE TUBES.

COMPUTATION/RECORD SHEET

PREPARED BY:	GENERAL ELECTRIC	PAGE NO:
CHECKED BY:	NUCLEAR SYSTEMS TECHNOLOGY OPERATION	
DATE: 5/12/87	TITLE:	

STIFFENING PLATES FOR BOTTOM PLATE (BEAM ELEMENTS)
DWG # C6221-17993-D PART # 11

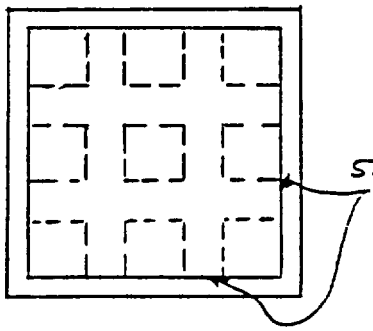

THE PLATES ARE 4" x 1/4"

AREA = 4 x 1/4 = 1 IN²

$$I_{yy} = \frac{1/4\,(4)^3}{12} = 1.333 \text{ in}^4$$

$$I_{zz} = \frac{4\,(1/4)^3}{12} = .005 \text{ in}^4$$

$$J \approx \frac{\pi}{32}\,(1/4)^4 = .0039 \text{ in}^4$$

DIAGONAL BRACING (BEAM ELEMENTS)
DWG # C6221-17983E PART # 13

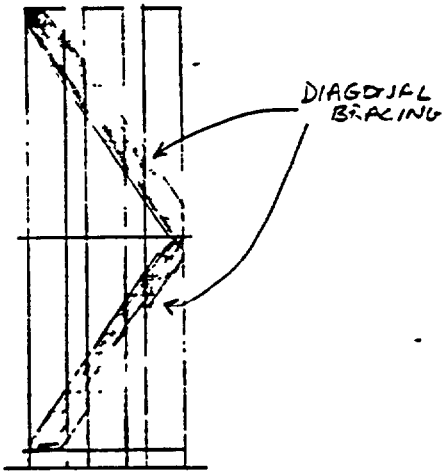

THE PLATES ARE 4" x 3/16"

AREA = 4 x 3/16 = .75 IN²

$$I_{yy} = \frac{4\,(3/16)^3}{12} = .0021973 \text{ in}^4$$

$$I_{zz} = \frac{3/16\,(4)^3}{12} = 1.0 \text{ in}^4$$

$$J \approx \frac{\pi}{32}\,(3/16)^4 = .0001213 \text{ in}^4$$

COMPUTATION/RECORD SHEET

PREPARED BY:	GENERAL ELECTRIC	PAGE NO:
CHECKED BY:	NUCLEAR SYSTEMS TECHNOLOGY OPERATION	
DATE: 5/14/87	TITLE:	

WEIGHT OF CONSOLIDATED BWR FUEL (2:1 CONSOLIDATION)

TOTAL WEIGHT OF FUEL AND CLADDING = 605 lbs
WEIGHT OF CANISTER = 100 lbs } FROM A FAX 9/18/86

FOR A 100 lb CANISTER THE THICKNESS WOULD BE:

$$100 = .29 \frac{\pi}{4}\left[6.125^2 - (6.125 - 2t)^2\right] 156 = 35.521\,(24.5t - 4t^2)$$

$$\therefore\ t^2 - 6.125t + .7036 = 0 \rightarrow t = \frac{6.125}{2} \pm \frac{1}{2}\sqrt{6.125^2 - 4 \cdot .7036}$$

$$t = .117''$$

THE CONSOLIDATED FUEL ASSEMBLY WILL CONSIST OF ONLY OF THE FUEL + CLADDING + THE CANISTER

CONSOLIDATED FUEL ASSEMBLY WEIGHT = 2(605) + 100 = 1310 lbs
WEIGHT OF SQUARE BASKET TUBE = 3.435 (156)(.20) = 155.4 lbs
VOLUME OF CONSOL. FUEL = $\frac{\pi}{4}(.563)^2 156(2)(7)(7)$ = 3805.9 in³
VOLUME OF CANISTER = 100/.29 = 344.8 in³
VOLUME OF SQUARE BASKET TUBE = 3.435(156) = 535.9 in³

TOTAL VOLUME = 3805.9 + 344.8 + 535.9 = 4686.6 in³
WEIGHT OF DISPLACED WATER = 4686.6 (62.4)/1728 = 169.2 lbs
SUBMERGED WEIGHT OF FUEL + CAN + BASKET = 1310 − 169.2 + 155.4 = 1296.2 lbs

ENTRAINED WATER (ADDED MASS)

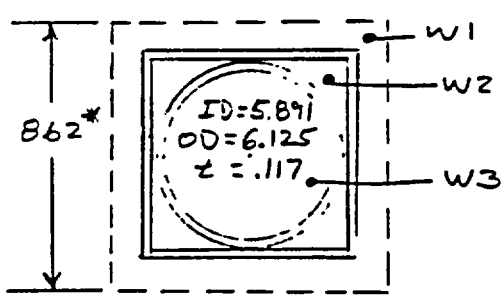

THERE ARE 3 CONTRIBUTIONS TO THE ADDED MASS

W1 = WATER ENTRAINED BETWEEN THE SQUARE CHANNELS (HORIZONTAL MOTION ONLY)
W2 = WATER BETWEEN CANISTER OD & THE INSIDE OF SQUARE CHANNEL
W3 = WATER ENTRAINED WITHIN CONSOLIDATED FUEL

AREA OF FUEL
$= \frac{3805.9}{156} = 24.4$ in³

$$W1 = \rho_w A_1 \ell = \frac{62.4}{1728}\left[8.62 - 6.519^2\right] 156 = 179.18$$

* 25.87/3 = 8.62 AVERAGE SPACEING

COMPUTATION/RECORD SHEET

PREPARED BY:	GENERAL ELECTRIC	PAGE NO:
CHECKED BY:	NUCLEAR SYSTEMS TECHNOLOGY OPERATION	
DATE: 5/14/87	TITLE:	

$$W2 = \frac{62.4}{1728}\left[6.25^2 - \frac{\pi}{4}6.125^2\right]156 = 54.07 \text{ lbs}$$

$$W3 = \frac{62.4}{1728}\left[\frac{\pi}{4}5.891^2 - 24.4\right]156 = 16.1 \text{ lbs}$$

TOTAL ADDED MASS (HORIZONTAL MOTION)
$= 179.18 + 54.07 + 16.1 = 249.35$ lbs

THE AREA OF THE BEAM USED TO REPRESENT THE FUEL BASKET TUBES IS THE AREA OF THE SQUARE BASKET TUBE – 3.435 IN^2. THIS GIVES THE CORRECT STIFFNESS. THE BEAM DENSITY THEN IS:

$$\rho_H = (1296.2 + 249.35)/[(3.435)(156)] = 2.884 \text{ lbs}/in^3$$
$$= .007464 \text{ lb-sec}^2/in^4$$

FOR THE VERTICAL MOTION W_1 IS EXCLUDED FROM THE MASS:

$$\rho_V = (1276.2 + 54.07 + 16.1)/[(3.435)(156)] = 2.550 \text{ lb}/in^3$$
$$= .00660 \text{ lb-sec}^2/in^4$$

COMPUTATION/RECORD SHEET

PREPARED BY: R L Hill	GENERAL ELECTRIC	PAGE NO: A2-5
CHECKED BY: W.H Whitelip	NUCLEAR SYSTEMS TECHNOLOGY OPERATION	
DATE: 8/27/86	TITLE: STANDARD BWR FUEL WT	

STANDARD BWR BASKET $w = 7625$ lbs

PIPE = 8" sch 10S (8 5/8" OD .148 WALL)

OD = 8.625"

ID = 8.329"

AREA $= \frac{\pi}{4}(8.625^2 - 8.329^2) = 3.94\ in^2$

$I = \frac{\pi}{64}(8.625^4 - 8.329^4) = 35.41\ in^4$

$J = 2I = 70.82\ in^4$

WEIGHTS

STANDARD BWR FUEL = 625 lbs

WEIGHT OF FUEL AND CLADDING ONLY = 605 lbs

WEIGHT OF CHANNELS ETC = 625 − 605 = 20 lbs

VOL = 20/.29 = 69 in³

BASKET = 3.94 in² (156) .29 = 178.25 lbs

TOTAL WEIGHT = 625 + 178.25 = 803.25 lbs

VOLUME OF FUEL = $\pi/4\,(.563)^2\,156\,(49) = 1903\ in^3$

TOTAL VOLUME = 1903 + 3.94 (156) + 69 = 2586.6 in³

DISPLACED WATER WEIGHT = 2586.6 (62.4) / 1728

= 93.4 lbs

ENTRAINED WATER VOLUME

$= \frac{\pi}{4}(8.329)^2(156) - (1903 + 69) = 6527.6\ IN^3$

WEIGHT OF WATER $= \frac{6527.6\,(62.4)}{1728} = 235.7$ lbs

ADDED WATER MASS BETWEEN CONTAINERS

VOLUME = 26.5 x 26.5 x 156 = 109551 IN³ TOTAL

WATER VOLUME = $109551 - \left(\frac{\pi}{4}(8.625)^2\,156\right)9$

= 27520.5 in³

WEIGHT = 27520.5 (62.4) / 1728 = 993.80 lbs

COMPUTATION/RECORD SHEET

PREPARED BY: R. Hill	GENERAL ELECTRIC	PAGE NO: A2-6
CHECKED BY: W.H. Whitlow	NUCLEAR SYSTEMS TECHNOLOGY OPERATION	
DATE: 8/27/86	TITLE:	

TOTAL WEIGHT OF FUEL TUBE FOR MODEL

$= 625 + 178.25 - 93.4 + 235.7 + \frac{993.8}{9} = 1056$ lbs

TOTAL WEIGHT $= 9(1056) = 9504$ lbs

DENSITY FOR MODEL $= \frac{9504 \text{ lbs}}{9(2.94)(156)} = 1.72$ lbs/in^3

$= 4.446 \times 10^{-3} \frac{\text{lb} \cdot \text{sec}^2}{\text{in}^4}$

TOTAL WEIGHT FOR VERTICAL MODEL

$= 625 + 178.25 - 93.4 + 235.7 = 945.55$ lbs

TOTAL WEIGHT $= 8510$ lbs

DENSITY FOR MODEL $= \frac{8510}{9(3.94)156} = 1.538$ lb/in^3

$= .003981$ lb sec^2/in^4

APPENDIX 3

PIT GATE GUARD ANALYSIS.

COMPUTATION/RECORD SHEET

PREPARED BY: W.H.WHITLING	GENERAL ELECTRIC	PAGE NO: A3-1
CHECKED BY: R.H.Hill	NUCLEAR SYSTEMS TECHNOLOGY OPERATION	APPENDIX 3
DATE: 10/28/86	TITLE: Cask Unloading Basin Doorway Guard	

EVALUATE THE DOORWAY GUARD TO SHOW THAT A DROPPED BASKET THAT TILTS TOWARDS THE UNLOADING PIT WILL BE BROUGHT TO REST AFTER IMPACT WITH THE GUARD.

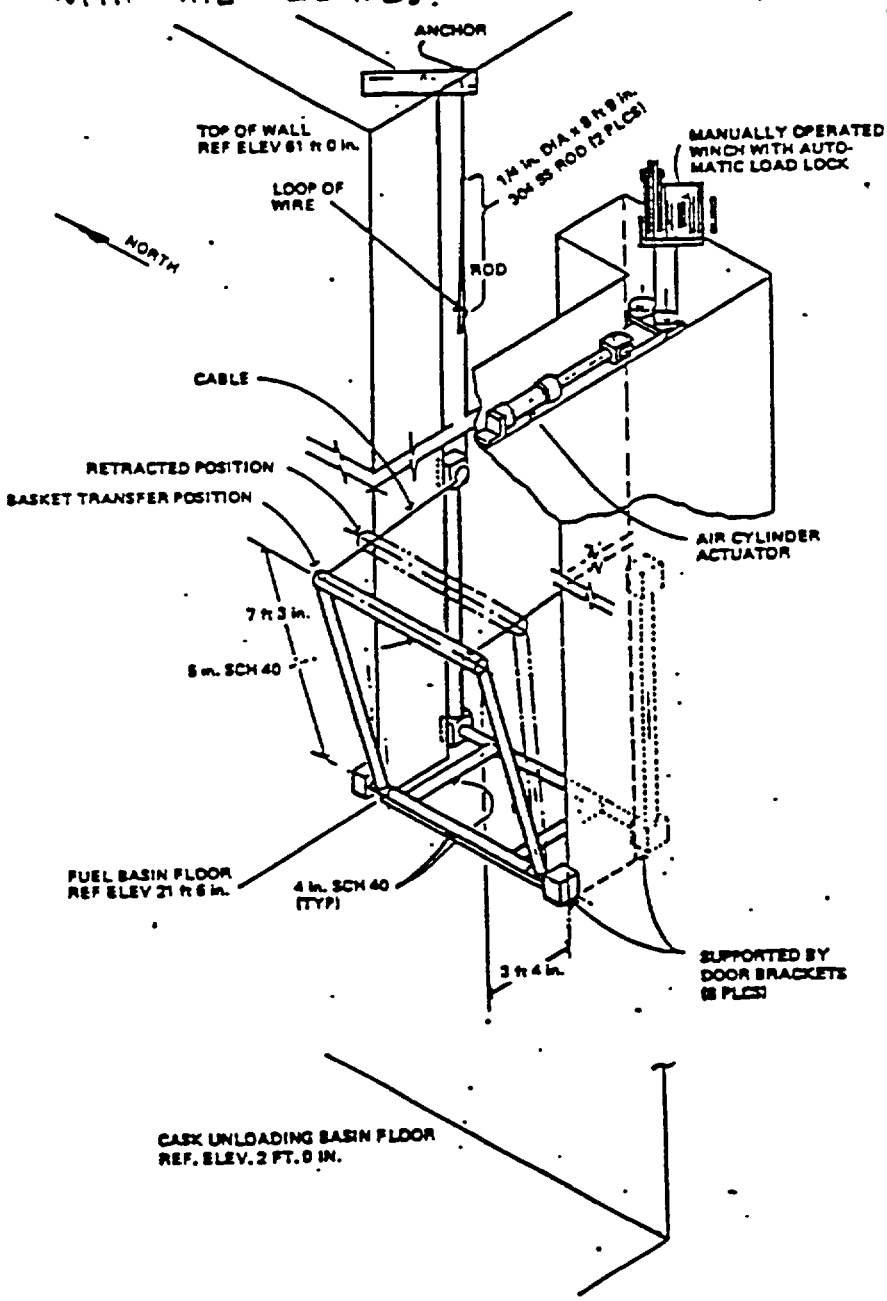

COMPUTATION/RECORD SHEET

PREPARED BY: W.H. WHITLINGER	GENERAL ELECTRIC	PAGE NO: A3-2
CHECKED BY: [illegible]	NUCLEAR SYSTEMS TECHNOLOGY OPERATION	
DATE: 10/28/86	TITLE: DOORWAY GUARD.	

A = POSITION OF GUARD SUFFICIENT FOR A VERTICAL LIFT OF BASKET FROM THE UNLOADING PIT

B = POSITION OF GUARD WHEN CABLE HAS STRETCHED THE SS ROD TO 40% STRAIN i.e. $.4(105) = 42''$

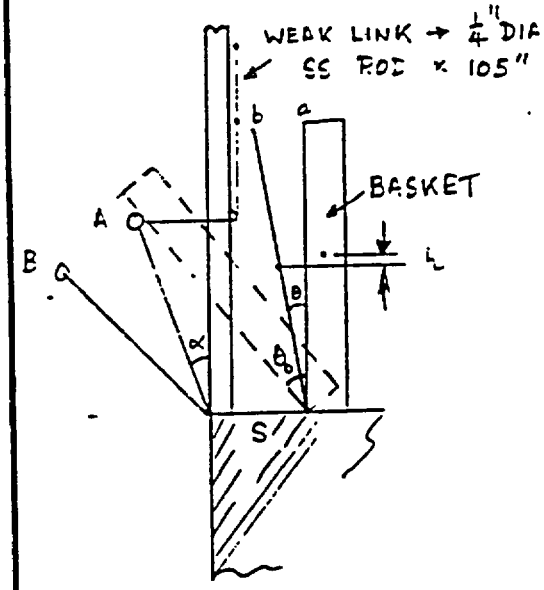

Assume the basket is dropped in a position S from the edge of the doorway such that the basket can rotate through $\theta_0°$ before impacting the guard in position A.

θ is the intermediate position from a to b.

During this interval the angular velocity goes from $\omega_a = 0$ to ω_b.

The potential energy $\Delta PE = Wh$ W = basket wt lbs.

Kinetic energy $\Delta KE = \frac{1}{2} I (\omega_b^2 - \omega_a^2)$ $I = \frac{W}{g} k^2$ k = rad of gyr.

Assume the basket is a beam rotating about its end

$$k^2 = \frac{\ell^2}{3} + \frac{r^2}{4}$$

ℓ = length of basket"
r = "radius" of basket

Drag energy $\Delta DE = FD \cdot \delta$

Drag force $FD = \sum A \frac{C_D}{2} \frac{\rho}{g} v_m^2$ where v_m = mean velocity a to b $= r_m \omega_m = r_m \left(\frac{\omega_b + \omega_a}{2}\right)$

Consider the basket in 4 segments

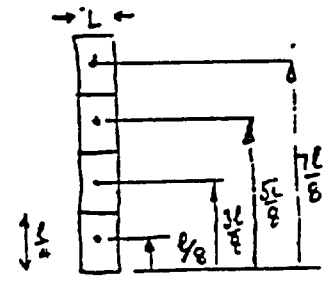

$$FD_1 = A_1 \frac{C_D}{2} \frac{\rho}{g} \left(\frac{\ell}{8}\right)^2 \frac{\omega_b^2}{4} \quad \text{where } A_1 = \frac{\ell}{4} \cdot L$$

$$= \frac{C_D}{2} \frac{\rho}{g} \frac{\ell \cdot L}{4} \frac{\ell^2}{64} \frac{\omega_b^2}{4}$$

∴ Drag energy on 1st element

$$DE_1 = FD_1 \cdot \delta_1 \quad \text{where } \delta_1 = r_1 \theta = \frac{\ell}{8} \theta$$

COMPUTATION/RECORD SHEET

PREPARED BY: W N WHITLING	GENERAL ELECTRIC	PAGE NO. A3-3
CHECKED BY: R L [illegible]	NUCLEAR SYSTEMS TECHNOLOGY OPERATION	
DATE: 10/29/86	TITLE: DOCKWAY GUARD	

$$\therefore DE_1 = \frac{C_D}{2}\rho_s \frac{\ell L}{4}\left(\frac{\ell}{8}\right)^2\left(\frac{\omega_b}{2}\right)^2\left(\frac{\ell}{8}\right)\theta = \frac{C_D}{2}\rho_s\frac{(\ell L)}{16}\left(\frac{\ell}{8}\right)^3\omega_b^2\theta$$

$$\therefore \text{Total } DE = \frac{C_D}{2}\rho_s\frac{\ell L}{16}\omega_b^2\theta\left[\left(\frac{\ell}{8}\right)^3+\left(\frac{3\ell}{8}\right)^3+\left(\frac{5\ell}{8}\right)^3+\left(\frac{7\ell}{8}\right)^3\right] = \frac{C_D}{2}\rho_s\frac{\ell^4 L}{16}\omega_b^2\theta\left[\frac{1^3+3^3+5^3+7^3}{8^3}\right]$$

$\therefore$ if $C_D = 2$ and $L = 26''$

$$DE = .97(26)\ell^4\frac{\rho}{16g}\theta\,\omega_b^2 = \lambda\theta\,\omega_b^2 \quad \text{where } \lambda = .97(26)\ell^4\frac{\rho}{16g}$$

The energy balance gives

$$\Delta PE = \Delta KE + DE$$

$$Wh = \tfrac{1}{2}I(\omega_b^2-\omega_a^2) + \lambda\theta(\omega_b+\omega_a)^2 \qquad \omega_a = 0,\quad h = \tfrac{\ell}{2}(1-\cos\theta)$$

$$\therefore W\tfrac{\ell}{2}(1-\cos\theta) = \tfrac{1}{2}I(\omega_b)^2 + \lambda\theta(\omega_b)^2 = \omega_b^2(\tfrac{1}{2}I+\lambda\theta)$$

$$\therefore \omega_b^2 = W\tfrac{\ell}{2}(1-\cos\theta)\Big/(\tfrac{1}{2}I+\lambda\theta)$$

Numerically :-

For $W = 14000$ lbs : $\ell = 156''$: a to b $\theta = 21°$ From a to b

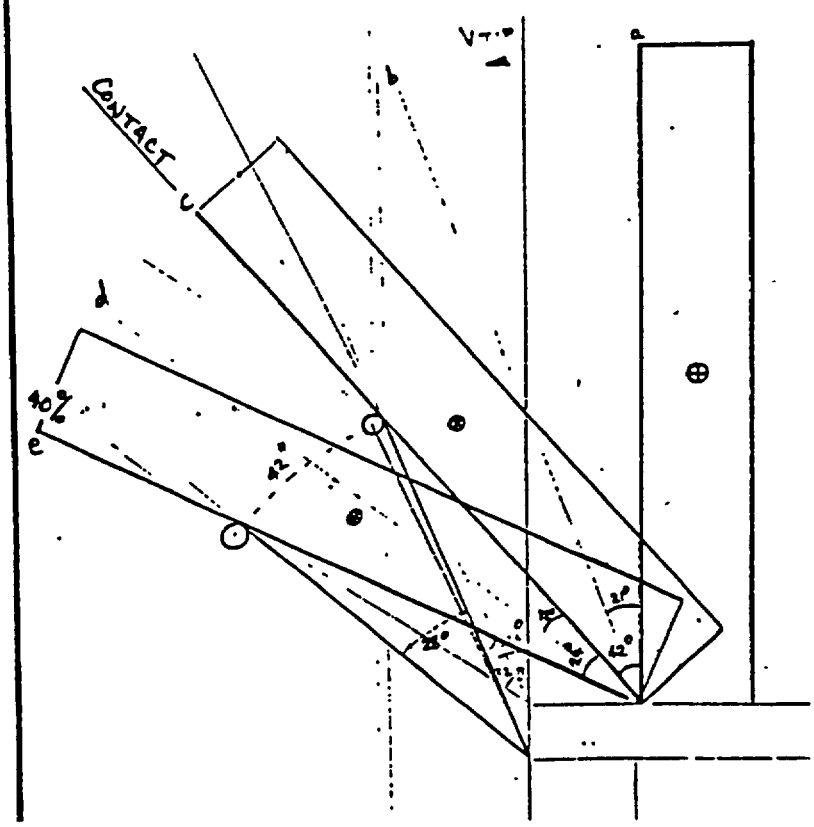

$$\Delta PE = 14000\left(\frac{156}{2}\right)(1-\cos 21)$$
$$= 72530 \text{ lb in}$$

$$I = \frac{W}{g}k^2 = \frac{W}{g}\left(\frac{\ell^2}{3}+\frac{r^2}{4}\right)$$
$$= \frac{14000}{386.4}\left(\frac{156^2}{3}+\frac{13^2}{4}\right) = .2954\,10^6 \text{ lb in sec}^2$$

$$\therefore \Delta KE = \tfrac{1}{2}(.2954)10^6\,\omega_b^2$$
$$= .1477\,10^6\,\omega_b^2$$

$$DE = .97(26)\frac{(156)^4}{1728}\frac{62.4}{16(386.4)}\left(\frac{21\pi}{180}\right)\omega_b^2$$
$$= .03197\,10^6\,\omega_b^2$$

$$\therefore 72530 = (.1477\,10^6 + .03197\,10^6)\omega_b^2$$

$$\therefore \omega_b = .6354 \text{ rads/sec}$$

$$V_{TIP} = 156(.6354) = 8.26 \text{ ft/sec}$$

COMPUTATION/RECORD SHEET

PREPARED BY: W.H. WHITING	GENERAL ELECTRIC	PAGE NO: A3-4
CHECKED BY: R.H. [illegible]	NUCLEAR SYSTEMS TECHNOLOGY OPERATION	
DATE: 10/29/86	TITLE: DOORWAY GUARD	

From b to c $\theta \rightarrow 21^\circ$ to 42°

$$\Delta PE = W\frac{\ell}{2}(\cos 21 - \cos 42) = 1.092\ 10^6(\cos 21 - \cos 42) = 207956 \text{ lb in}$$

$$\Delta KE = .1477\ 10^6(\omega_c^2 - \omega_b^2) = .1477\ 10^6\ \omega_c^2 - 59631$$

$$DE = .03196\ 10^6(\omega_c + \omega_b)^2 = .03196\ 10^6(\omega_c^2 + 1.2708\,\omega_c + .4037)$$

$$\therefore 207956 = .1477\ 10^6\ \omega_c^2 - 59631 + .03196\ 10^6\ \omega_c^2 + .0406\ 10^6\ \omega_c + .0129\ 10^6$$

$$\therefore .1797\ \cancel{10^6}\ \omega_c^2 + .0406\ \cancel{10^6}\ \omega_c - .2547\ \cancel{10^6} = 0$$

$$\omega_c^2 + .2259\,\omega_c - 1.4174 = 0$$

$$\therefore \omega_c = 1.1011 \text{ rads/sec} \qquad \omega_c^2 = 1.2123$$

$$V_{TIP} = 13(1.1011) = 14.31 \text{ ft/sec.}$$

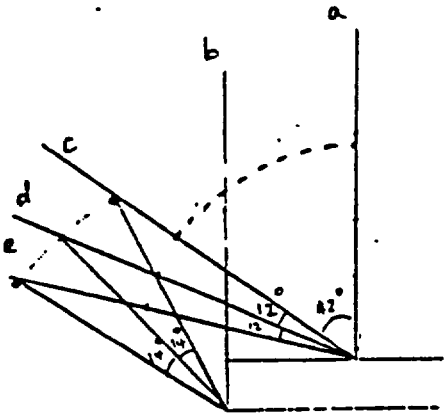

After impact c → d → e the SS rod is stretching and energy is absorbed by the rod.

Ignoring the initial elastic energy (very small) the stretch energy

$SE = F_m \Delta$ → mean force × extension

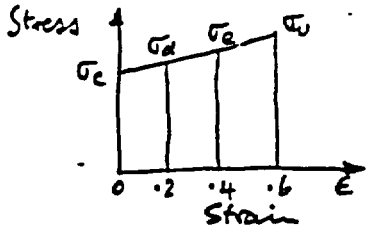

$\sigma_c = 35000$ psi

$\sigma_b = 85000$ psi ≙ 60%

$\therefore \sigma_e = 68{,}300$ psi ≙ 40%

$\sigma_d = 51650$ psi ≙ 20%

From c to d the stretch energy

$$SE = \left(\frac{\sigma_c + \sigma_d}{2}\right) A_B\,(.2)(105) \quad \text{where}$$

$$A_B = \text{bar area} = 2\left(\frac{\pi}{4}\right)\left(\frac{1}{4}\right)^2 = .09817 \text{ in}^2 \qquad L = 105''$$

$$\therefore SE = \frac{(35000 + 51650)}{2}(.09817)(.2)(105) = .0893\ 10^6 \text{ lb in}$$

From d to e the stretch energy

$$SE = \left(\frac{51650 + 68300}{2}\right)(.09817)(.2)(105) = .1237\ 10^6 \text{ lb in}$$

COMPUTATION/RECORD SHEET

PREPARED BY: W.H WHITLINE	GENERAL ELECTRIC	PAGE NO: A3-5
CHECKED BY: [illegible]	NUCLEAR SYSTEMS TECHNOLOGY OPERATION	
DATE: 10/30/86	TITLE: DOORWAY GUARD	

Energy balance $c \to d$

$$\Delta PE = 1.092\ 10^6(\cos 42 - \cos 54) = .1697\ 10^6 \text{ lb in}$$

$$\Delta KE = .1477\ 10^6(\omega_d^2 - \omega_c^2) = .1477\ 10^6\ \omega_d^2 - .1477\ 10^6\ 1.2.23$$

$$= .1477\ 10^6\ \omega_d^2 - .1791\ 10^6 \text{ lb in}$$

$$DE = .03196\ 10^6 \cdot \left(\frac{12}{21}\right)(\omega_d + \omega_c)^2$$

$$= .0183\ 10^6\ \omega_d^2 + .0403\ 10^6\ \omega_d + .0222\ 10^6 \text{ lb in}$$

$$SE = .0893\ 10^6 \text{ lb in}$$

$$\therefore .1697\ 10^6 = .1477\ 10^6\ \omega_d^2 - .1791\ 10^6 + .0183\ 10^6\ \omega_d^2 + .0403\ 10^6\ \omega_d + .0222\ 10^6 + .0893\ 10^6$$

$$\therefore \omega_d^2 + .2428\ \omega_d - 1.4295 = 0$$

$$\therefore \omega_d = 1.0804 \qquad \omega_d^2 = 1.1672$$

$V_{TIP} = 14.04$ ft/sec. ie deceleration is occurring but slowly.

From $d \to e$

$$\Delta PE = 1.092\ 10^6(\cos 64 - \cos 66) = .1977\ 10^6 \text{ lb in}$$

$$\Delta KE = .1477\ 10^6(\omega_e^2 - 1.1672) = .1477\ 10^6\ \omega_e^2 - .1724\ 10^6 \text{ lb in}$$

$$DE = .0183\ 10^6(\omega_e + 1.0804)^2 = .0183\ 10^6\ \omega_e^2 + .0395\ 10^6\ \omega_e + .0214\ 10^6$$

$$SE = .1237\ 10^6 \text{ lb in}$$

$$\therefore .1977\ 10^6 = .1477\ 10^6\ \omega_e^2 - .1724\ 10^6 + .0183\ 10^6\ \omega_e^2 + .0395\ 10^6\ \omega_e + .0214\ 10^6 + .1237\ 10^6$$

$$\therefore \omega_e^2 + .238\ \omega_e - 1.3554 = 0$$

$$\therefore \omega_e = 1.051 \text{ rads/sec}$$

$V_{TIP} = 13.7$ ft/sec

This analysis was "computerised". Program name TILT Listing is given on sheets 11 & 12. 4 cases were run

CASE A. Cask 78" from the doorway edge. $\theta = 60°$ W = 140000 lb 75000 lb

CASE B. Cask 26" " " " " $\theta = 42°$ "

CASE C. Cask 0" " " " " $\theta = 26°$ "

COMPUTATION/RECORD SHEET

PREPARED BY: W. H. WILLING	GENERAL ELECTRIC	PAGE NO: A3-6
CHECKED BY: [illegible]	NUCLEAR SYSTEMS TECHNOLOGY OPERATION	
DATE: 10/30/86	TITLE: DOORWAY GUARD	

CASE A. CAEV 78" FROM DOORWAY EDGE

$\theta_1 = 62°$ $\theta_2 = 14°$ $\theta_T = 76°$

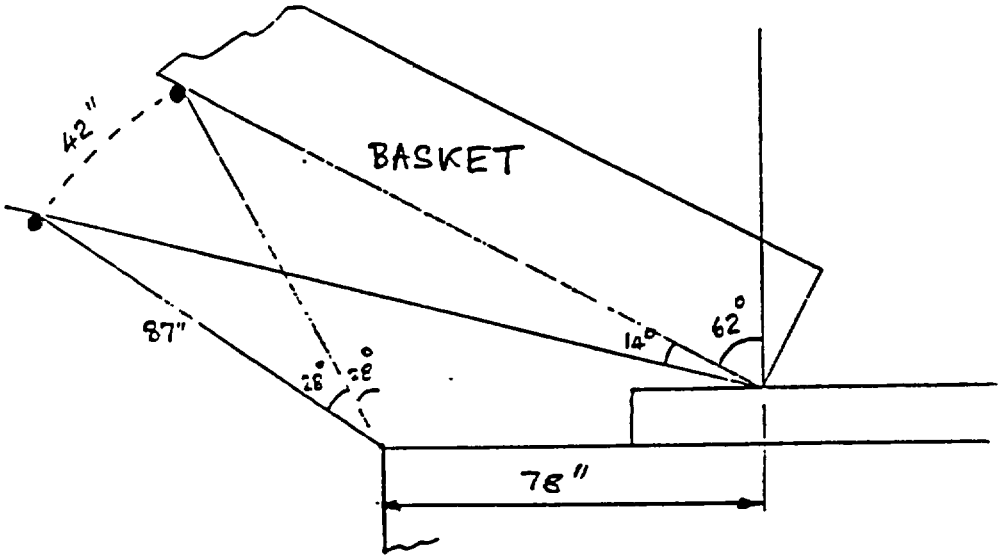

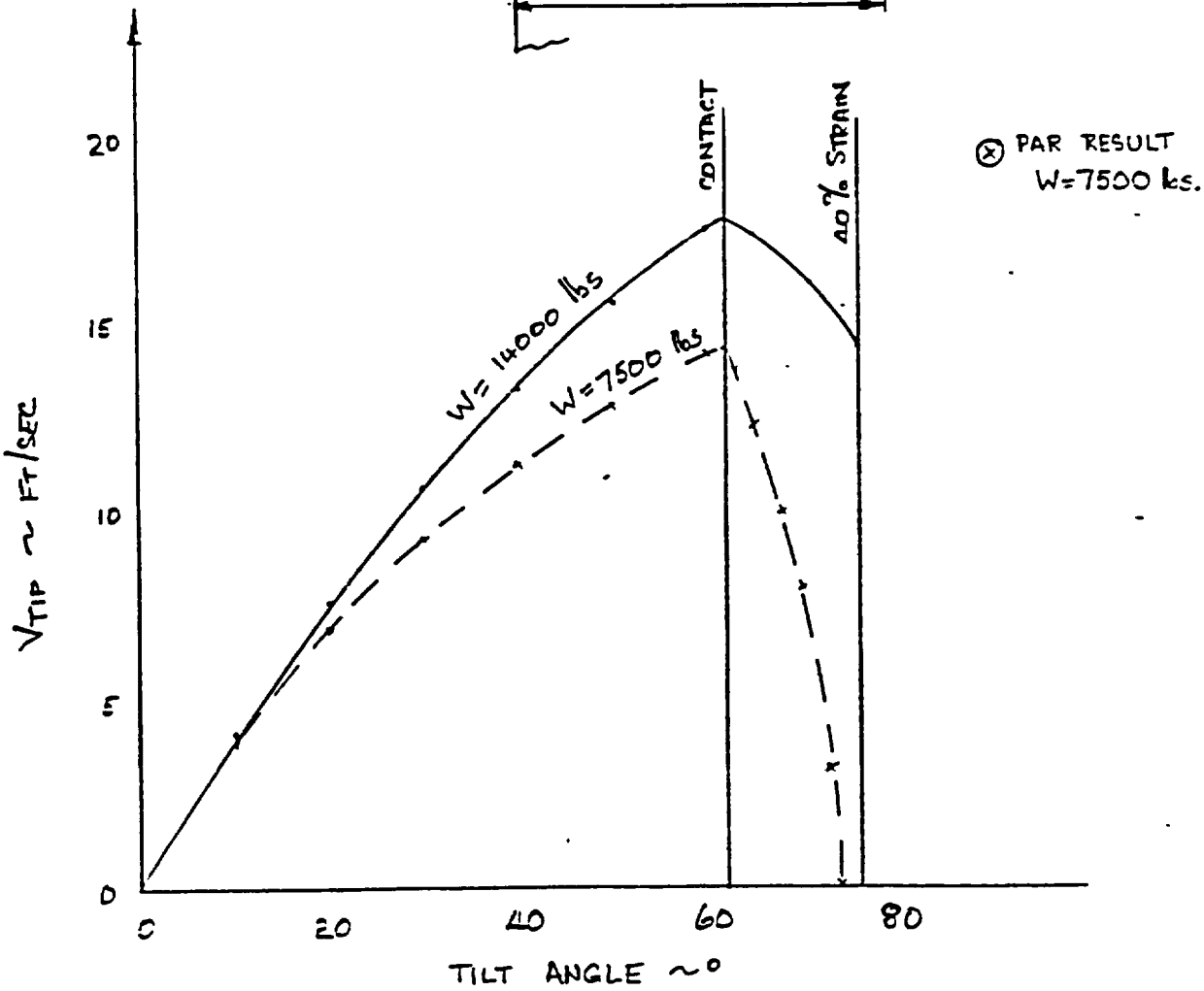

COMPUTATION/RECORD SHEET

PREPARED BY: W H WHITLINE	GENERAL ELECTRIC	PAGE NO: A3-7
CHECKED BY: [illegible]	NUCLEAR SYSTEMS TECHNOLOGY OPERATION	
DATE: 10/30/86	TITLE: DOORWAY GUARD	

CASE B CASK 26" FROM EDGE OF DOORWAY

$\theta_1 = 42°$ $\theta_2 = 22\frac{1}{2}°$ $\theta_T = 64.5°$

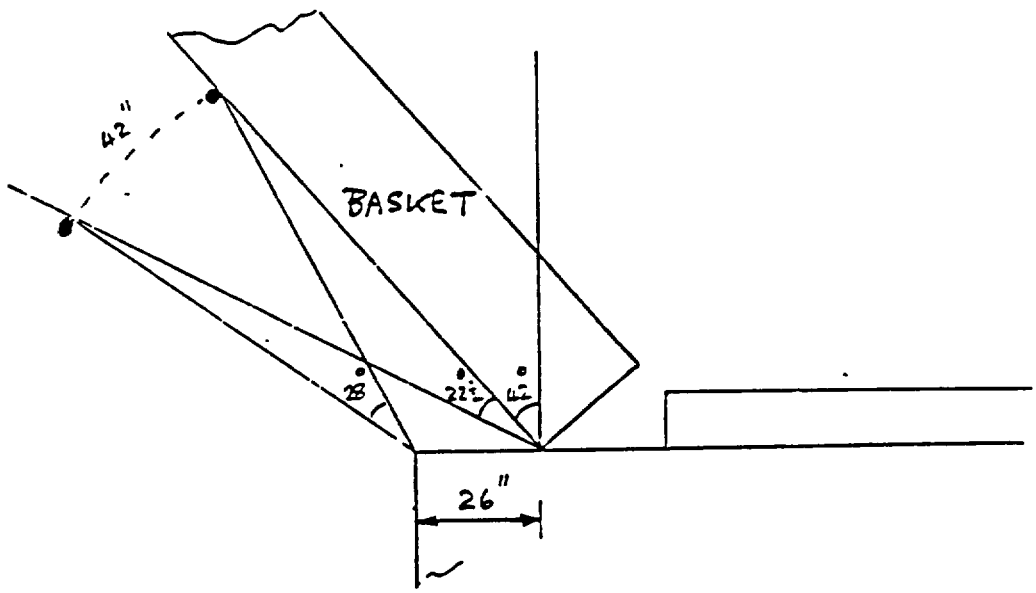

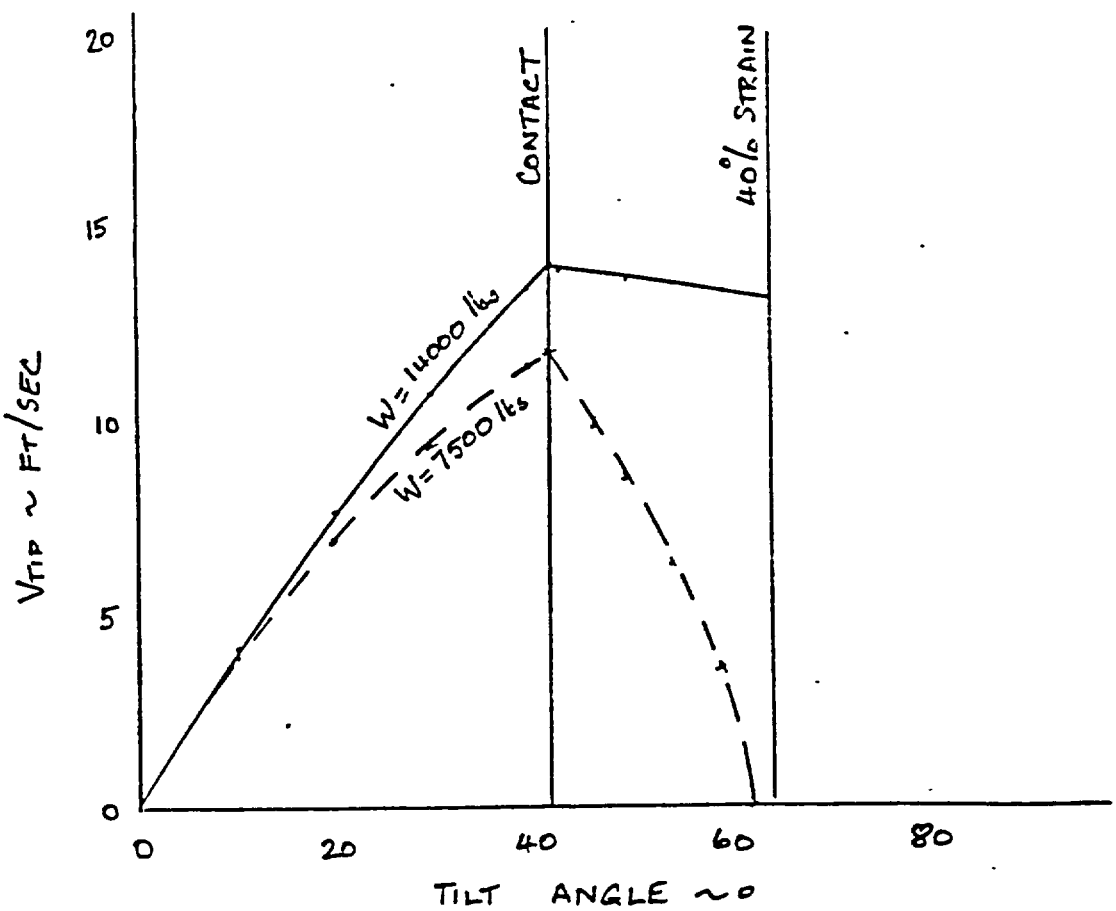

COMPUTATION/RECORD SHEET

PREPARED BY: W.H. WHITING	GENERAL ELECTRIC	PAGE NO: A3-8
CHECKED BY: F.J. Hill	NUCLEAR SYSTEMS TECHNOLOGY OPERATION	
DATE: 10/30/86	TITLE: DOORWAY GUARD	

CASE C CASK 0" FROM EDGE OF DOORWAY

$\theta_1 = 28°$ $\theta_2 = 28°$ $\theta_T = 56°$

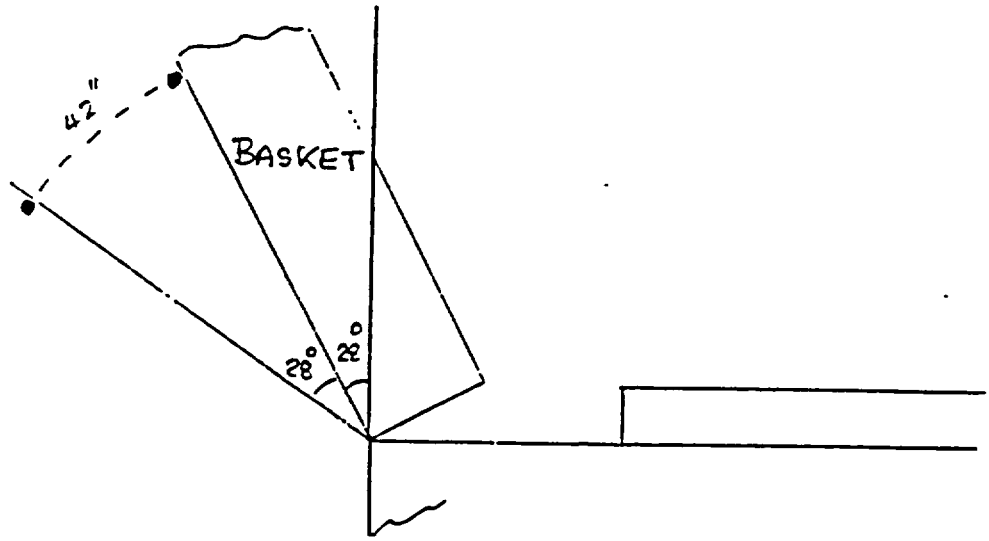

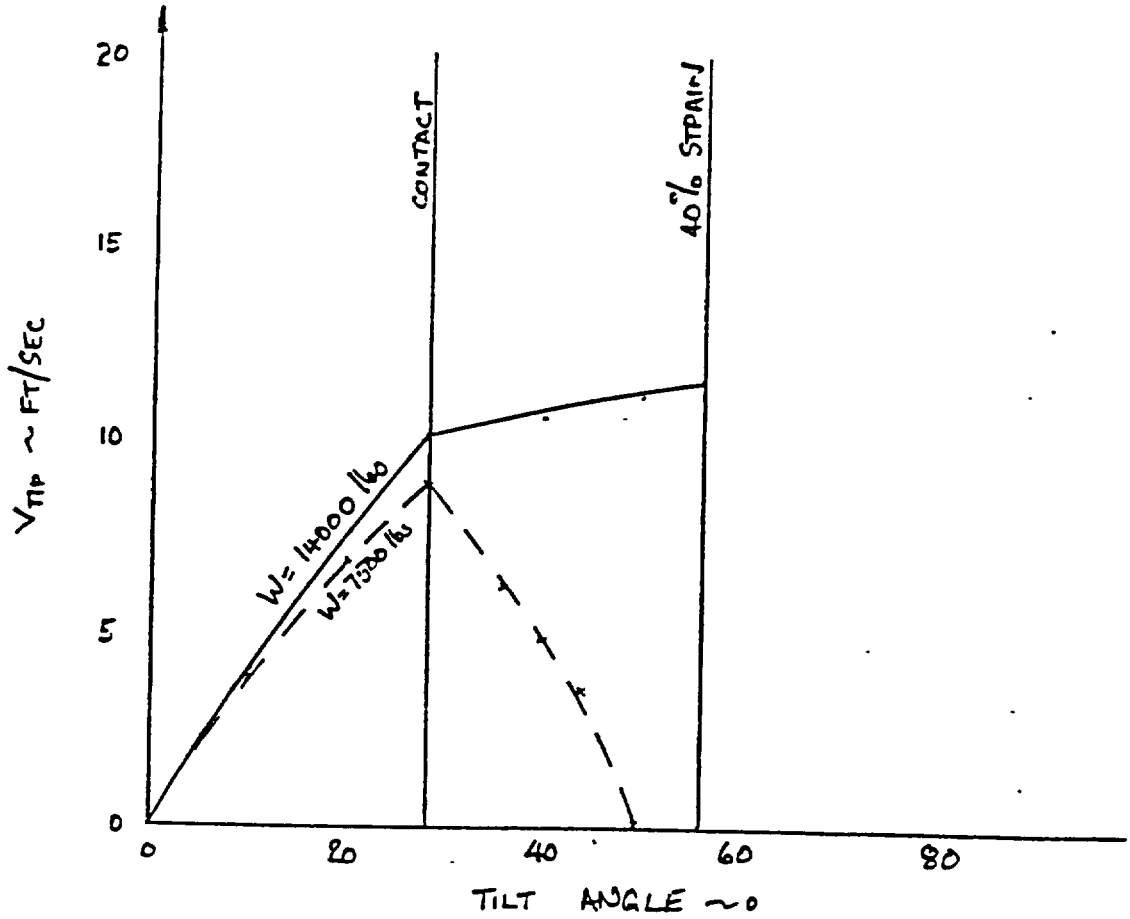

COMPUTATION/RECORD SHEET

PREPARED BY: W.H. WHITING	GENERAL ELECTRIC	PAGE NO: A3-9
CHECKED BY: R.L. H[illegible]	NUCLEAR SYSTEMS TECHNOLOGY OPERATION	
DATE: 10/30/86	TITLE: DOORWAY GUARD	

CASE D. CASK 26" FROM EDGE OF DOORWAY

$\theta_1 = 42^\circ \quad \theta_2 = 22\frac{1}{2}^\circ \quad \theta_T = 64\frac{1}{2}^\circ$

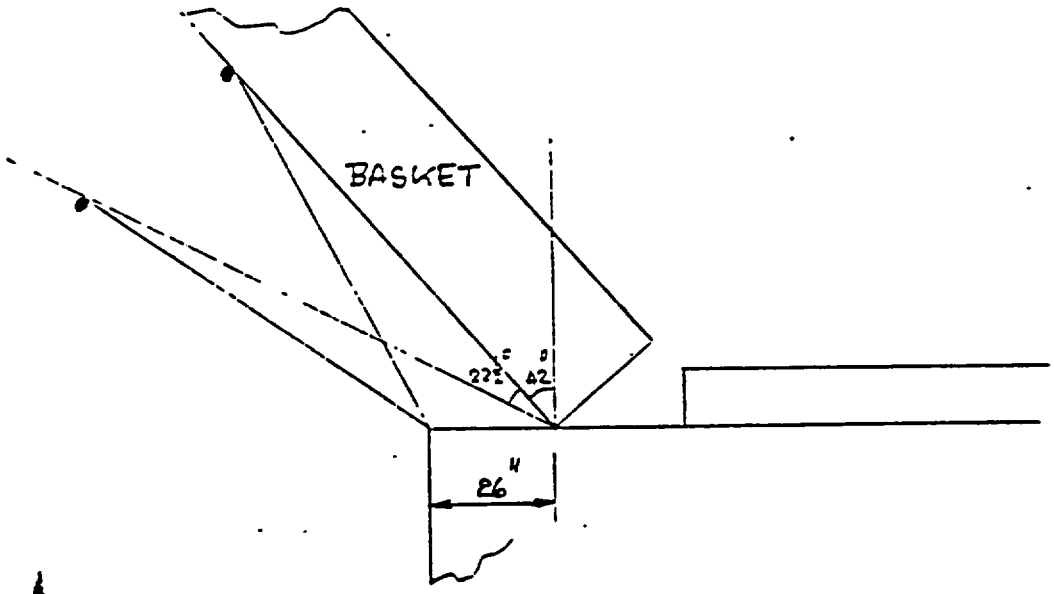

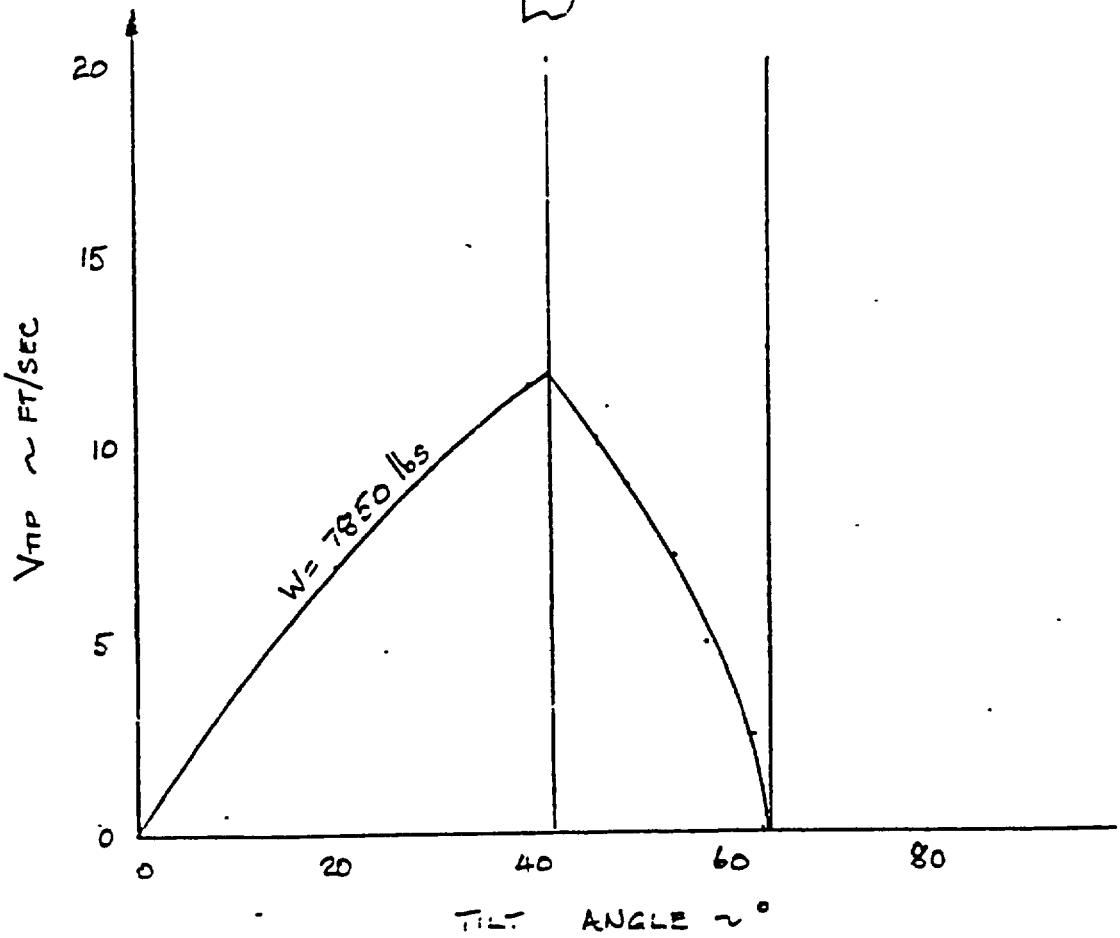

COMPUTATION/RECORD SHEET

PREPARED BY: W.H. WHITING	GENERAL ELECTRIC	PAGE NO: A3-10
CHECKED BY: R A Hill	NUCLEAR SYSTEMS TECHNOLOGY OPERATION	
DATE: 10/31/86	TITLE: DOORWAY GUARD	

CONCLUSIONS:

1/ FOR THE ORIGINAL BASKET WT. OF 7500 lbs THE DOORWAY GUARD SYSTEM IS ADEQUATELY DESIGNED TO BRING THE BASKET TO REST FOR ALL THE DROP SCENARIOS LISTED.

2/ FOR A BASKET WT OF 14000 lbs THE SYSTEM IS TOTALLY INADEQUATE IN SATISFYING THE REQUIREMENT OF STOPPING THE BASKET WITHIN THE 40% STRAIN LIMIT.
IN FACT FRACTURE OF THE SS RODS IS LIKELY FOR ALL DROP SCENARIOS.

3/ IF ADMINISTRATION CONTROLS WERE IMPLEMENTED TO LIMIT THE TILT ANGLE TO 42° (CASES B&D) THE WT. LIMIT ON THE BASKET WOULD BE 7850 lbs

4/ THERE IS NO "EASY FIX" ON THE EXISTING DESIGN TO TAKE THE 14000 lb WT. SUCH AS INCREASING THE SS ROD AREA. THIS WOULD DILUTE THE EFFECT OF THE "WEAK LINK" AND FAILURE COULD OCURR ELSEWHERE IN THE MECHANISM.

RECOMMENDATION:

REDESIGN THE GATE CONCEPT IF 14000 lb BASKETS ARE TO BE USED.

COMPUTATION/RECORD SHEET

PREPARED BY: R J HILL	GENERAL ELECTRIC	PAGE NO. A3-11
CHECKED BY: [illegible]	NUCLEAR SYSTEMS TECHNOLOGY OPERATION	
DATE: 10/30/86	TITLE: DOORWAY GUARD	

```
      PROGRAM TILT
C
C     PROGRAM TO COMPUTE THE NET KINETIC ENERGY OF A TILTING CASK
C     FOR THE MORRIS OPERATION
C
      G = 386.4
      RHO = 62.4 / 1728.
      THETAO = 0.0
      DELTA = 1.0
      ALPHA = 2.0
      WRITE (6,111)
 111  FORMAT('  INPUT THETA1, THETA2, THETA TOTAL AND WEIGHT: ')
      READ (6,*) OMEGA1, THET2, END, W
      DELTA2 = ALPHA * THET2 / 28.
      W2 = 0.0
      AL = 156.
      AI = W * 8154 / G
      W1 = 0.0
      CD = 2.0
      AROD = .0982
      AL2 = 85.
      E = 50000/.6
      SIG = 35000.
      ICONT = 1
      RADIAN = 3.141592654 / 180.
      CONDE = (.97*26.*AL**4 * RHO /(16. * G))*DELTA * RADIAN
      WRITE (6,1000)
      DO 100 I = DELTA, OMEGA1, DELTA
      THETA = I * RADIAN
      PE = W * AL * .5 *(COS(THETAO) - COS(THETA))
C
C     SOLVE FOR QUADRATIC
C
      B = (CONDE * 2. * W1)/(AI / 2. ) /
     + (1. + (CONDE /(AI/ 2.)))
      A = 1.0
      C = (((-PE + (CONDE * W1*W1)) /(AI/2.)) - (W1*W1))/
     + (1. + (CONDE /(AI/2.)))
D      WRITE (6,*) A, B, C
      W2 = (-B + (B**2 - 4. * A * C)**.5) / 2. * A
      AKE = (AI / 2.) * (W2*W2 - W1*W1)
      DE = (CONDE * ( W2 + W1)**2)
      TOTKE = TOTKE + AKE
      TOTDE = TOTDE + DE
      TOTPE = TOTPE + PE
      DEGREE = THETA/RADIAN
      IF(DEGREE.EQ.OMEGA1) GO TO 97
      IF (ICONT.NE.10) GO TO 98
      ICONT = 0
 97   WRITE (6, 1001) DEGREE, PE, AKE, DE, W2, W1
 98   ICONT = ICONT + 1
      W1 = W2
      THETAO = THETA
 100  CONTINUE
C
C
      CONDE = (.97*26.*AL**4 * RHO /(16. * G))*DELTA2 * RADIAN
      WRITE (6,1002)
      TOTSE = 0.0
      DO 200 I = OMEGA1 + ALPHA, 90, ALPHA
      THETA = THETAO + (DELTA2 * RADIAN)
```

THIS HAS A LIMITING VALUE OF 1.0

COMPUTATION/RECORD SHEET

PREPARED BY: R E HILL	GENERAL ELECTRIC	PAGE NO: A2-12
CHECKED BY: [illegible]	NUCLEAR SYSTEMS TECHNOLOGY OPERATION	
DATE: 10/30/86	TITLE: DOORWAY GUARD	

```
      PE = W * AL * .5 *(COS(THETAO) - COS(THETA))
C
C     SOLVE FOR QUADRATIC
C
D      WRITE (6,*) SIG
      SE = (SIG + (E/(210))*AL2*ALPHA*RADIAN)*
     + AROD*AL2*ALPHA*RADIAN
      TOTSE = TOTSE + SE
      TOTSTR = TOTSTR + (AL2*ALPHA*RADIAN)
      SIG = SIG + (E/(105)*(AL2*ALPHA*RADIAN))
      B = (CONDE * 2. * W1)/(AI / 2. ) /
     + (1. + (CONDE /(AI/ 2.)))
      A = 1.0
      C = (((SE - PE + (CONDE * W1*W1)) /(AI/2.)) - (W1*W1))/
     + (1. + (CONDE /(AI/2.)))
      IF (C .GE. 0.0) C = 0.0
D      WRITE (6,*) A, B, C
      W2 = (-B + (B**2 - 4. * A * C)**.5) / 2. * A
      AKE = (AI / 2.) * (W2*W2 - W1*W1)
      DE = (CONDE * ( W2 + W1)**2)
      TOTKE = TOTKE + AKE
      TOTDE = TOTDE + DE
      TOTPE = TOTPE + PE
      DEGREE = THETA/RADIAN
      WRITE (6, 1003) DEGREE, PE, AKE, DE, SE, W2, TOTSTR
      W1 = W2
      THETAO = THETA
      IF(TOTSTR.GE.42) GO TO 210
      IF (DEGREE.GT.END) GO TO 215
 200  CONTINUE
 210  WRITE (6,1004)
      WRITE (6, 1003) DEGREE, TOTPE,TOTKE,TOTDE,TOTSE,W2,TOTSTR
 215  CONTINUE
 1000 FORMAT (' THETA          PE              KE              DE'
     + '          W2        W1'/)
 1001 FORMAT (1X, F5.2, 3E15.4, 2F8.5)
 1002 FORMAT (//' THETA        PE              KE              DE'
     + '              SE        W2      DELTA'/)
 1003 FORMAT (1X, F5.2, 4E13.4, 2F8.4)
 1004 FORMAT (' TOTALS')
      END
```

COMPUTATION/RECORD SHEET

PREPARED BY: W.H. WHITLING	GENERAL ELECTRIC	PAGE NO: A4-1
CHECKED BY: R.H. Hill 12/1/86	NUCLEAR SYSTEMS TECHNOLOGY OPERATION	APPENDIX A4
DATE: 11/24/86	TITLE: CONSOLIDATED ROD CANISTER	

Material - 304 SS $\sigma_y = 35$ KSI

Limits for components in the direct load path are

Tensile $\sigma_t = \frac{1}{5}(35000) = 7000$ psi

Bending $\sigma_b = 1.5\,\sigma_t = 10{,}500$ psi

Shear $\sigma_v = \frac{2}{3}\sigma_t = 4{,}700$ psi

All dimensional details are from drawing GEN° 796E879 Sheets 1 & 2 NEBO 9/17/85 Rev A

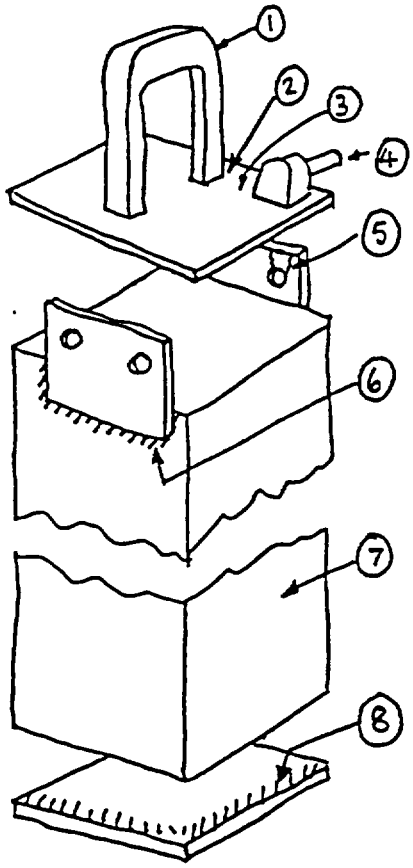

Total weight to be lifted (dry)

$W = 605 + 605 + 140 = 1350$ lbs.

(canister wt = 140 lbs)

① Lifting bar.

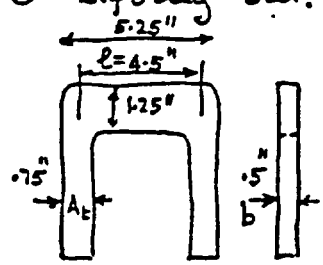

(a) Tensile area

$A_t = .75 \times .5 = .375\ in^2$

$\sigma_t = \frac{1350}{2(.375)} = 1800$ psi < 7000 psi ∴ OK!

(b) Bending

Assume the crossbeam bends due to a distributed load with its extremities pinned (this is conservative)

$Z = \frac{I}{y} = \frac{b t^3 2}{12\, t} = \frac{b t^2}{6} = \frac{.5(1.25)^2}{6} = .1302\ in^3$

$M = \frac{Wl}{8} = \frac{1350\,(4.5)}{8} = 759.4$ lb in

∴ $\sigma_b = 759.4/.1302 = 5832$ psi $< 10{,}500$ psi ∴ OK!

(c) Shear

$A_s = 1.25 \times .5 \times 2 = 1.25\ in^2$

$\sigma_v = 1350/1.25 = 1080$ psi < 4700 psi ∴ OK!

COMPUTATION/RECORD SHEET

PREPARED BY: W.H. WHITLING	GENERAL ELECTRIC	PAGE NO: A4 – 2
CHECKED BY: R J Hill 12/1/86	NUCLEAR SYSTEMS TECHNOLOGY OPERATION	
DATE: 11/25/86	TITLE:	

② Welds

$A_w = (.75 \times 2 + .5 \times 2) 2 \times \frac{1}{8} = 0.625 \text{ in}^2$

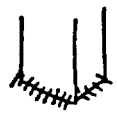

$\sigma_v = 1350/.625 = 2160 \text{ psi} < 4700 \text{ psi} \quad \therefore \text{OK!}$

③ Plate bending.

Assume a concentrated load and pinned ends

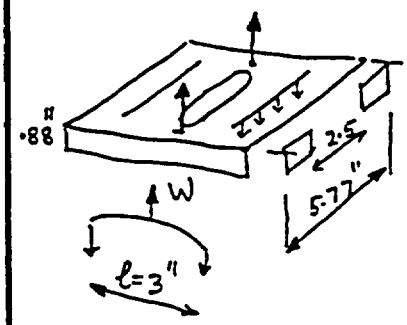

$M = \frac{Wl}{4} = 1350 \left(\frac{3}{4}\right) = 1013 \text{ lb in}$

$Z = \frac{bt^2}{6} \quad : \quad b = 5.77 - 2.5 = 3.27''$

$t = .88''$

$\therefore Z = \frac{3.27(.88)^2}{6} = .422 \text{ in}^3$

$\therefore \sigma_b = 1013/.422 = 2400 \text{ psi} < 10{,}700 \text{ psi} \quad \therefore \text{OK!}$

④ Shear on support pins $d = 1/2''$

$A_s = \frac{\pi}{4}\left(\frac{1}{2}\right)^2 4 = .7854 \text{ in}^2$

$\sigma_v = 1350/.7854 = 1719 \text{ psi}$

Assuming only 3 pins take the load

$A_s = .589 \text{ in}^2$

$\sigma_v = 1350/.589 = 2292 \text{ psi} < 4700 \text{ psi} \quad \therefore \text{OK!}$

⑤ Shear tearout on support plate. ($\frac{1}{4}$" thick)

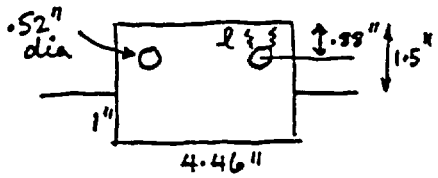

$l = .88 - .52/2 = .62''$ (minimum)

$A_s = 8(.62)\frac{1}{4} = 1.24 \text{ in}^2$

For 3 holes only $A_s = .93 \text{ in}^2$ (conservative)

$\sigma_v = 1350/.93 = 1452 \text{ psi} < 4700 \text{ psi} \quad \therefore \text{OK!}$

COMPUTATION/RECORD SHEET

PREPARED BY: W.H. WHITLING	GENERAL ELECTRIC	PAGE NO: A4 — 3
CHECKED BY: RAHill 12/1/86	NUCLEAR SYSTEMS TECHNOLOGY OPERATION	
DATE: 11/25/86	TITLE:	

⑥ Plate welds

Area $= A_W = (1+1+4.46)\,2\,(.060)\cdot.707 = .548\ in^2$

$\sigma_V = \frac{1350}{.548} = 2463\ psi < 4700\ psi \quad \therefore OK!$

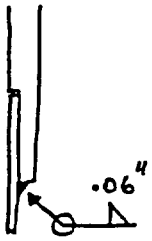

⑦ Tension in canister. (16g)

$A = 4 \times 6 \times .0598 = 1.435\ in^2$

$\sigma_t = \frac{1350}{1.435} = 941\ psi < 7000\ psi \quad \therefore OK!$

⑧ Bottom weld ($\frac{1}{2}$" plate)

$A_W = 4 \times 6 \times .060 \times .707 = 1.018\ in^2$

$\sigma_V = 1350/1.018 = 1326\ psi < 4700\ psi \quad \therefore OK!$

(Bending on ½" plate for distributed loading is small)

SUMMARY

Margin of safety $= \left(\frac{Limit}{Stress} - 1\right)$

LOCATION	STRESS PSI	LIMIT PSI	MARGIN OF SAFETY
1(a)	1800	7000	2.89
1(b)	5832	10500	.80
1(c)	1080	4700	3.35
2	2160	4700	1.18
3	2400	10500	3.38
4	2292	4700	1.05
5	1452	4700	2.24
6	2463	4700	.91
7	941	7000	6.44
8	1326	4700	2.54

The lowest margin is .8 — bending of lifting bar.

To increase this to the limit would require a wt of $1350\ \frac{10500}{5832} = 2431$ lbs.

If the canister were empty of fuel and full of water the extra wt would be

$\left(\frac{6 \times 6 \times 180}{1728}\right) 62.4 = 234$ lbs $\ll 2431$ lbs

∴ any residual water in the canister during the lift will not effect the conclusion.

CONCLUSION

ALL MARGINS ARE POSITIVE FOR A WET OR DRY LIFT.

APNDX. B.16
MORRIS SQUARE TUBE BASKET
STRESS REPORT

JUNE 1987

XL-T24-870062

MORRIS SQUARE TUBE BASKET STRESS REPORT

REVISION 0

R. J. Hill
W. H. Whitling

June 1987

TOP OF DOCUMENT

TABLE OF CONTENTS

	PAGE
1. INTRODUCTION	2
2. DESIGN CRITERIA	2
2.1 Seismic Response Spectra	3
2.2 Allowable Stresses	5
2.3 Loads	6
3. DESIGN DESCRIPTION	7
3.1 Heavy BWR Baskets (Consolidated Fuel)	7
3.2 Light BWR Baskets (Standard Fuel)	7
3.3 Grid Structure	7
4. STRUCTURAL ANALYSIS	9
4.1 Heavy Basket Analysis Modelling & Analysis	9
4.2 Light Basket Modelling & Analysis	9
4.3 Grid Modelling & Analysis	17
4.4 Latch Analysis	30
4.5 Pit Gate Guard Analysis	34
4.6 Canister Lifting Device	34
5. CONCLUSIONS	34
6. REFERENCES	35
7. APPENDICES	
A1 Lifting Bail	A1-1
A2 Structural Properties	A2-1
A3 Pit Gate Guard Analysis	A3-1
A4 Consolidated Rod Canister	A4-1

1. INTRODUCTION

This report analyzes the square tube basket design shown in figure 2. These baskets will store either standard BWR fuel, or consolidated BWR fuel. Since the consolidated fuel analysis will envelope the standard BWR, that will be the only case analyzed.

There is a limit to the amount of consolidated fuel that can be stored without overloading the grid support system. This limit is 103 heavy (consolidated fuel) baskets and 312 light (regular fuel) baskets in the arrangement shown for these numbers in Figure 8.

This analysis uses BWR baskets of total weight 7625 lbs to be in the 312 light positions on the grid.

Any use of PWR baskets with standard fuel would not affect the conclusions of this report.

2. DESIGN CRITERIA

Only the relevant criteria affecting the feasibility of the increased loading schemes are listed here.

2.1. Seismic Response Spectra

The horizontal and vertical design response spectra curves are shown in Figure 1 and digitized for input into the response Spectra analysis, as shown in Table 1. The safe shutdown earthquake (SSE) is based on 5% damping and is considered as a factored loading condition as defined by the American Institute of Steel Construction (AISC) see Reference 5). The operating base earthquake (OBE) is defined as being half the SSE for rigid body motion and is considered as a normal operating condition by the AISC.

TABLE 1

	SSE		OBE	
FREQUENCY CPS	HORIZONTAL	VERTICAL	HORIZONTAL	VERTICAL
0.10	.01	.01	.0	.0
0.25	.10	.08	.04	.04
0.50	.18	.15	.11	.08
1.00	.35	.22	.20	.13
2.50	.68	.53	.43	.35
3.50	.65	.65	.41	.43
9.00	.58	.50	.35	.30
33.00	.20	.20	.10	.10
1000.	.20	.20	.10	.10

Figure 1

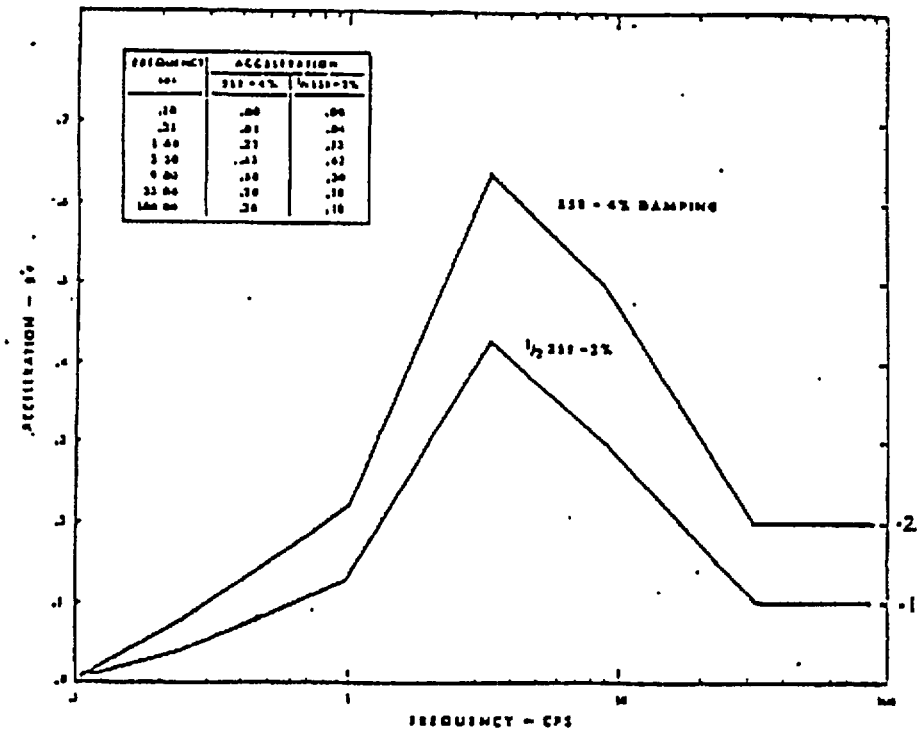

VERTICAL DESIGN RESPONSE SPECTRA FOR NUCLEAR POWER PLANTS

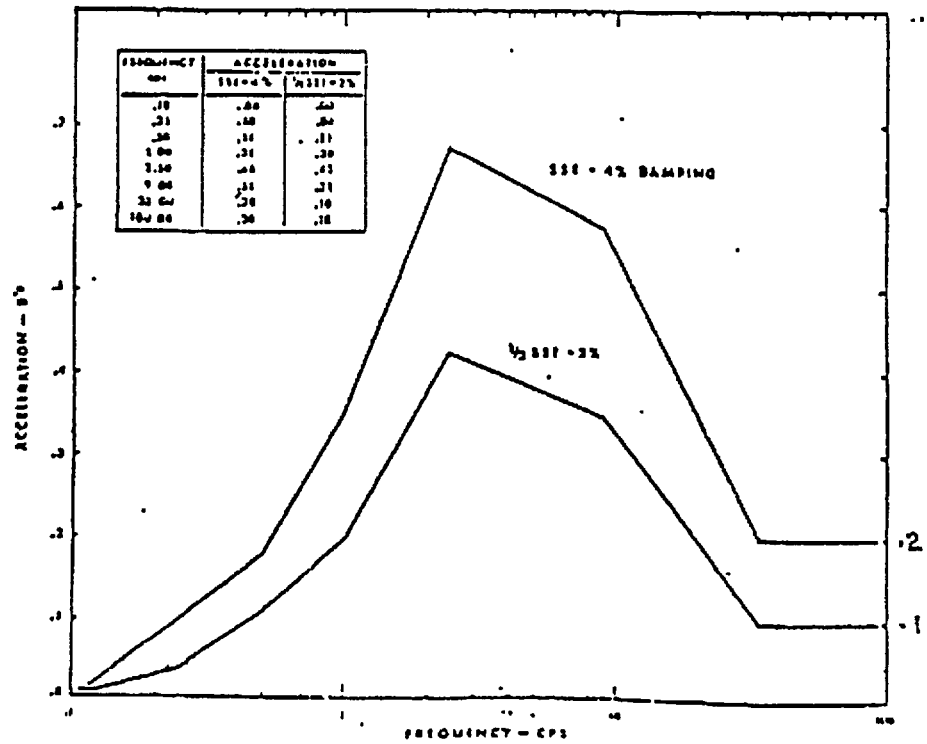

HORIZONTAL DESIGN RESPONSE SPECTRA FOR NUCLEAR POWER PLANTS

TOP OF DOCUMENT

2.2 Allowable Stresses

All the material of construction is 304 stainless steel of various product forms. The yield strength for all is taken as 35ksi. The design rules and allowable stresses are based on Section 5 of Reference 4, Specification for Fabrication of Steel Buildings.

For normal service conditions (including the OBE) the allowable Stresses from Pf I of Reference 4, Section 5, are:

Tension →	$F_t = 0.6\sigma_y$	= 0.6 (35) = 21	ksi
Near pinholes etc.	F_t =	.45(35) = 16	ksi
Shear	F_v =	.4 (35) = 14	ksi
Bending	F_b =	.66(35) = 23.1	ksi
Bearing	F_{br} =	.9 (35) = 32	ksi

For factored loads PtII of Reference 4, Section 5, allows an increase in allowable stresses to reflect the possibility of the material exceeding yield in bending providing that equilibrium is not jeopardized. This has been interpreted as a 50% increase in allowable stresses i.e. for the membrane stresses limit, this is extended from $0.6\sigma_y$ to $0.9\sigma_y$.

Tension	F_t = 1.5	(21)	= 31.5	ksi
Near pinholes	F_t = 1.5	(16)	= 24	ksi
Shear	F_v = 1.5	(14)	= 21	ksi
Bending	F_b = 1.5	(23.1)	= 34.7	ksi
Bearing	F_{br} = 1.5	(32)	= 48	ksi

For combined membrane (σm) and bending stresses (σb) the interaction limit must be satisfied

$$\frac{\sigma m}{F_t} + \frac{\sigma b}{F_b} \leq 0$$ For buckling limits-- See Pg 28

For components in the direct lifting load path

$F_t = 1/5\ \sigma_y = 7$ ksi

$F_v = 2/3\ F_t = 4.7$ ksi

TOP OF DOCUMENT

2.3 Loads

The dry weight of the consolidated baskets is 13,790 lbs. as follows:

Fuel & cladding = 2 (605)	= 1210 lbs.	See Appendix
Basket tube	= 155.4 lbs.	pg. A2-3
Fuel canister	= 100 lbs.	
	1465.4 lbs.	
Bottom plate $(25.87^2 \frac{(5)}{(8)}(.29))$	= 121.3 lbs.	
Stiffening plates $(4x4x24.145 \frac{1}{4}x.29)$	= 28.0 lbs.	See Figure 2
Miscellaneous plates, diagonal stiffeners, base attachments for a total basket weight of 2000 lbs.	= 452.1 lbs. - approximated	

Total wt. = 9x1465.4+121.3+28.0+452.1= 13,790 lbs.

(NOTE: The wt. used in the dynamics analysis is adjusted to include entrained water, hydromass and bouancy effects. These are different for vertical and horizontal motions. See Appendix A2).

The dry weight of the standard basket with fuel is 7625 lbs. (See Appendix A2).

3. DESIGN DESCRIPTION

3.1 Consolidated Fuel (Heavy) Baskets

The drawings used were:

C6221
17988-E - Rev. 1
17973-D - Rev. 1
17992-D - Rev. 1
17993-D - Rev. 3
17988-E - Rev. 1
17994-B - Rev. 1

3.2 Standard Fuel (Light) Baskets.

The drawings used were:

17988-D	Rev. 6
18114-D	Rev. 3

3.3. Grid Structure

The drawings used were:

17977-D	Rev. 4
18063-D	Rev. 4 Sheets 1 & 2
18107-D	Rev. 2
18109-D	Rev. 5 Sheet 1

TOP OF DOCUMENT

Figure 2

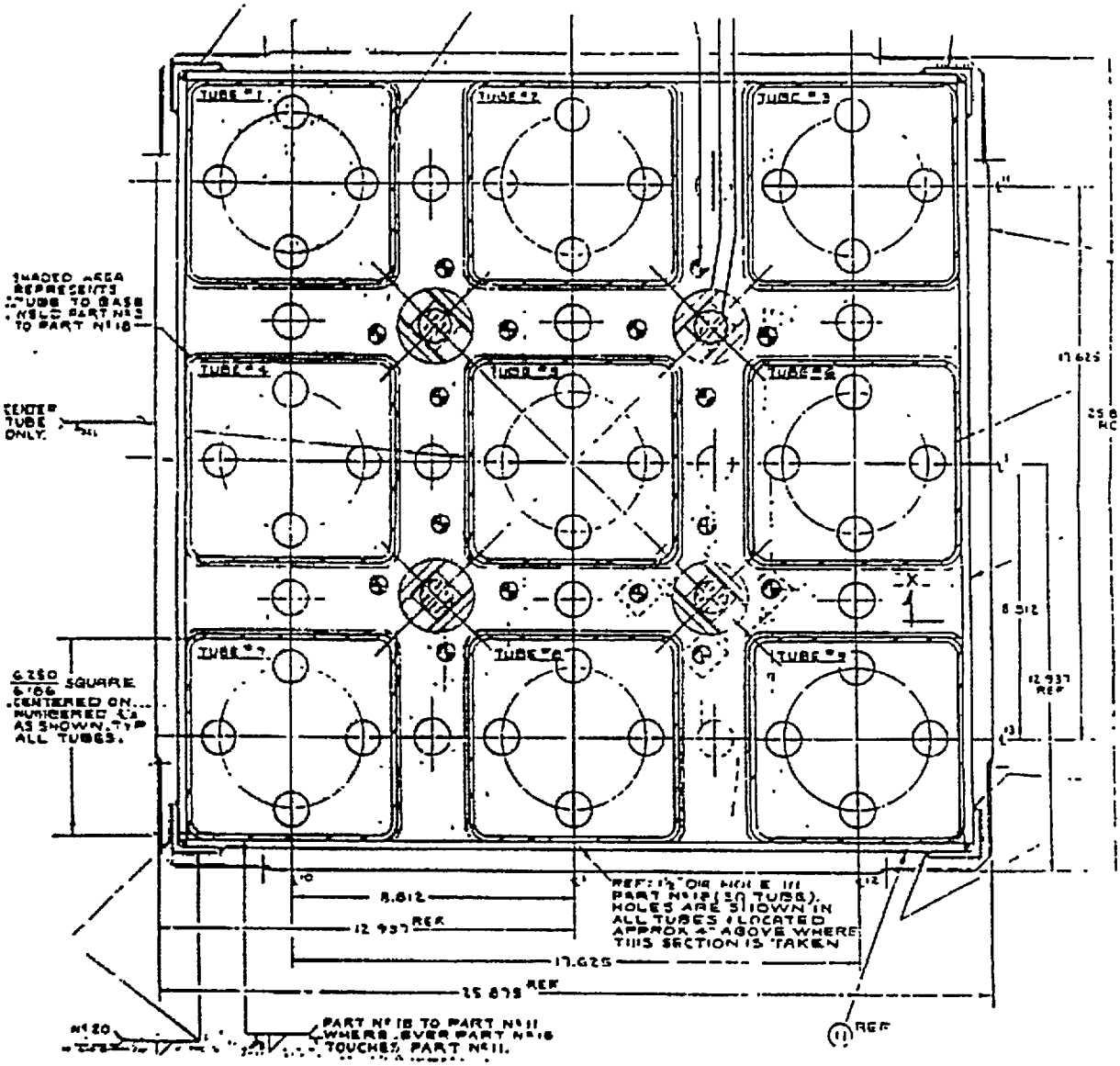

Extracted from LWG # C6221-17993-L REV.3

TOP OF DOCUMENT

4. STRUCTURAL ANALYSIS

4.1 Heavy Basket Modelling and Analysis*

The basket is modelled as a collection of beams and shell elements. These are shown in Figures 3 and 4. The stiffness and density value for these elements are given in Appendix A2.

A response spectra analysis was done using the ANSYS finite element computer code with the stiffnesses and weights given in Appendix A2 as base line. The stiffness of the grid attachment is several orders of magnitude higher than the basket support plate and therefore a decoupled analysis of the basket is justified. The significant mode shapes were animated on the Textronix machine and showed that horizontal motion induced bending was the predominant mode shape as expected. The lowest significant frequency for the design was 4.7 hz.

4.2 Light Basket Modelling and analysis

The basket is modelled again as a collection of beams and shell elements as shown in Figures 5 and 6. The stiffness and density values are also given in Appendix A2, based on a basket dryweight of 7625 lbs. The analysis of this basket shows that the critical area shifts from the base plate (with the plate beneath the tubes acting as a rigid plate) to the tubes themselves acting as cantilevers. The lowest significant frequency for the light basket design is 11.2 hz. thereby increasing the loads on the grid from the PWR basket analysis where the lowest natural frequency was 17.3 hz.

*These heavy baskets are an updated version of those analyzed in Ref. 7.

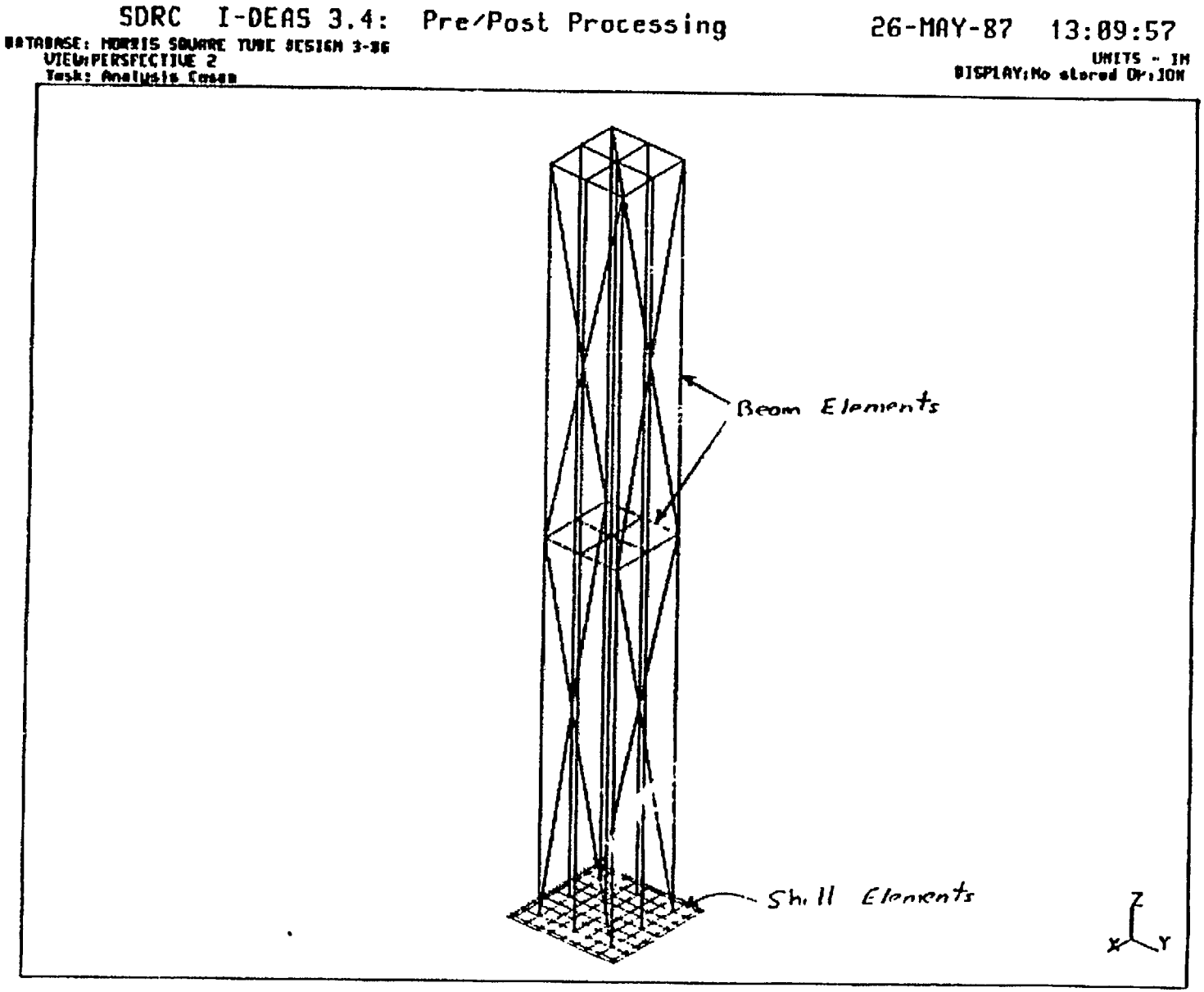

HEAVY BASKET MODEL

Figure 3

TOP OF DOCUMENT

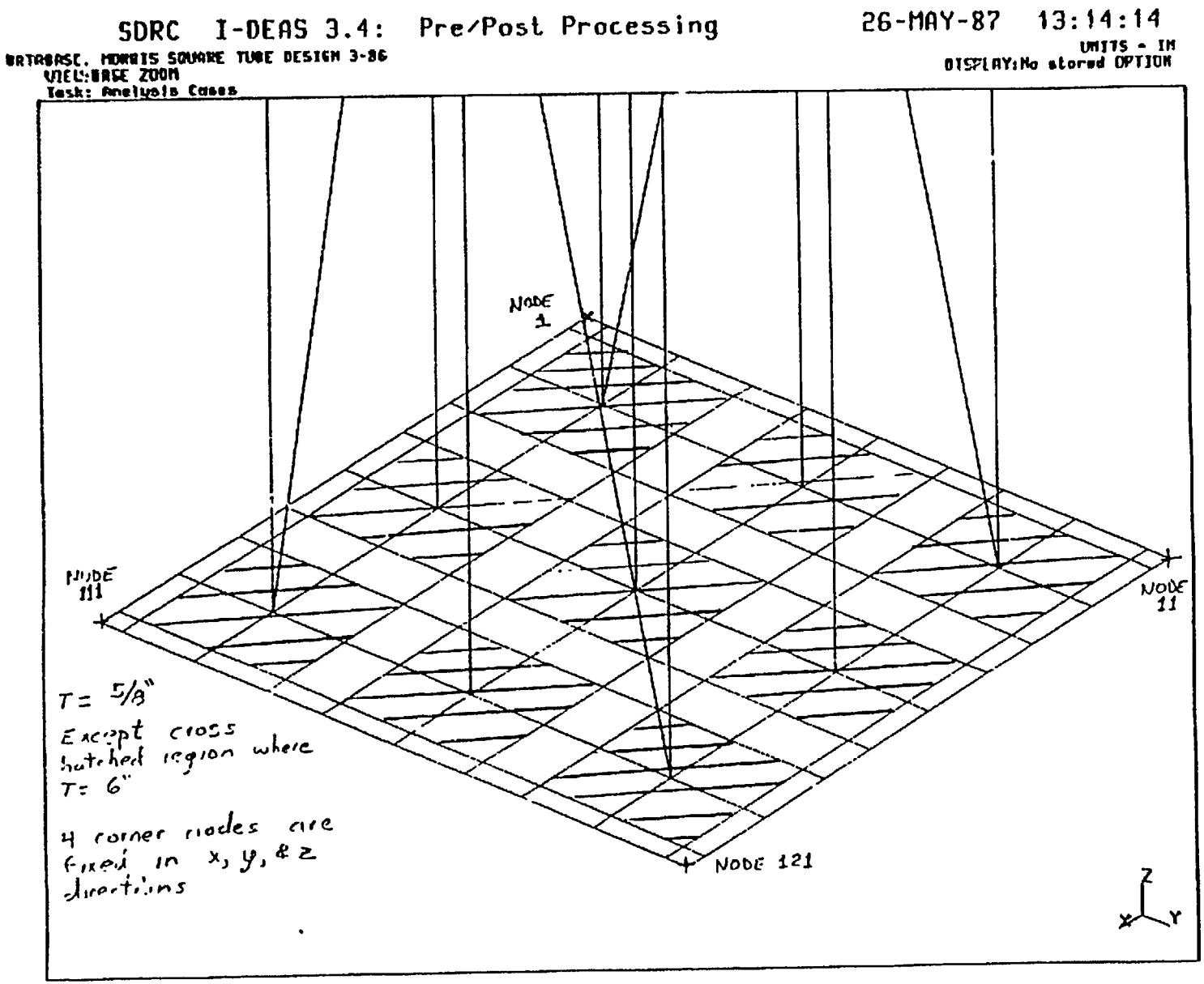

HEAVY BASKET MODEL

Figure 4

AL

SDRC I-DEAS 3.4: Pre/Post Processing 12-NOV-86 09:21:29

DATABASE: MORRIS BLW BASKET 7625 LBS
VIEW:FULL MODEL
Task: Model Preparation

UNITS - IN
DISPLAY:No stored OPTION

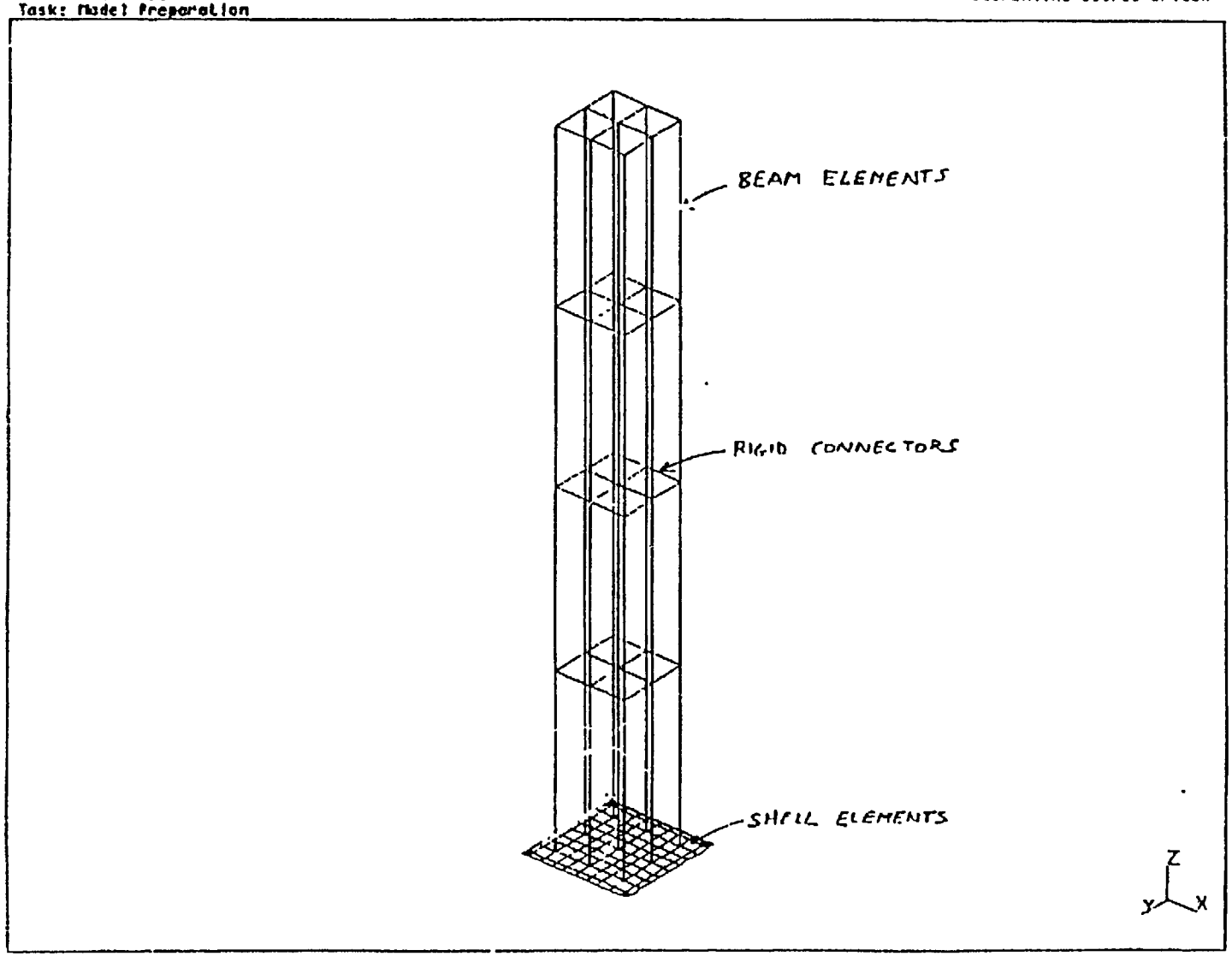

LIGHT BASKET MODEL

Figure 5

TOP OF DOCUMENT

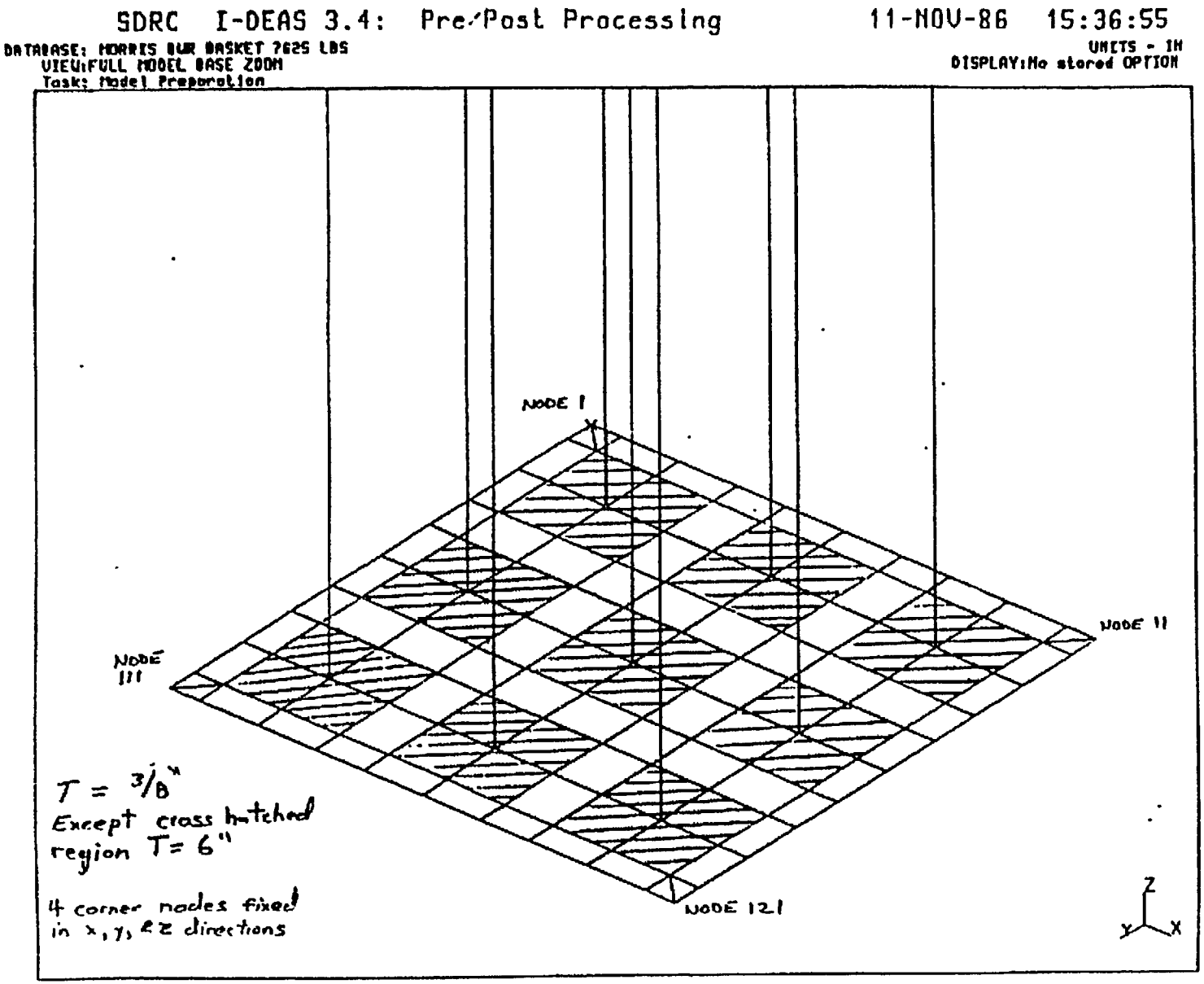

Figure 6

LIGHT BASKET MODEL

TOP OF DOCUMENT

TABLE 3

RESULTS FOR LIGHT BASKETS

MODE	FREQ
1	11.2 Hz
2	11.2 Hz
3	105.1 Hz

BASKET WEIGHT = 7625 lbs

DEAD WEIGHT = SUBMERGED WEIGHT
= DRY WEIGHT - DISPLACED WATER
= (7625) - (73.4)(9) = 6784 lbs

DEAD WEIGHT PER POST = (6784)/4 = 1696 lb

MODE *	EARTHQUAKE DIRECTION	MODE 1/ F_x	MODE 1/ F_y	MODE 1/ F_z	MODE 2/ F_x	MODE 2/ F_y	MODE 2/ F_z	TOTAL F_x	TOTAL F_y	TOTAL F_z
		FORCES IN LBS.								
1	X	504	528	5155	233	37	1286	737	565	6443
	Y	730	764	7460	161	26	891	891	790	8351
	Z	—	1	407				—	1	407
TOTAL (SRSS)								1156	971	10555
F_H								1510		
11	X	26	162	940	761	724	7351	787	886	8291
	Y	38	234	1360	526	500	5081	564	734	6441
	Z	—	—	409				—	—	409
TOTAL (SRSS)								968	1150	10607
F_H								1503		
111	X	26	163	943	761	728	7480	836	891	8423
	Y	38	236	1365	526	503	5171	564	739	8536
	Z	2	1	423				2	1	423
TOTAL (SRSS)								1008	1158	12000
F_H								1535		
121	X	504	529	5152	233	40	7021	737	569	6673
	Y	727	765	7456	161	28	983	890	773	8439
	Z	—	1	408				—	1	408
TOTAL (SRSS)								1156	976	10705
F_H								1513		

* SEE FIGURE 3

AVERAGE F_H = 1515 lbs AVERAGE F_V = 10942 ± 1696 lbs
= 12638 lbs (DOWN)
= 9246 lbs (UP)

TOP OF DOCUMENT

TABLE 4

RESULTS FOR HEAVY BASKETS

MODE	FREQ
1	4.73
2	4.74
6	37.41

BASKET WEIGHT = 13790 lbs
DEAD WEIGHT = SUBMERGED WEIGHT
= DRY WEIGHT - DISPLACED WATER
= (13790) - (167.2)(9) = 12267 lbs

DEAD WEIGHT PER POST = (12267)/4 = 3067 lbs

FORCES IN LBS.

MODE # *	EARTHQUAKE DIRECTION	MODE 1/6 F_x	MODE 1/6 F_y	MODE 1/6 F_z		MODE 2/ F_x	MODE 2/ F_y	MODE 2/ F_z		TOTAL F_x	TOTAL F_y	TOTAL F_z
1	X					1201	699	11896		1201	699	11896
	Y	706	1219	12825						706	1219	12825
	Z	2	6.	430						2	6	430
TOTAL (SRSS)										1393	1405	17464
F_H										1979		
11	X					1279	707	11887		1279	707	11887
	Y	704	1133	12786						704	1133	12786
	Z	5	1	463						5	1	463
TOTAL (SRSS)										1460	1135	17464
F_H										1847		
111	X					1848	1263	12729		1848	1263	13729
	Y	1229	1799	12757						1229	1799	12757
	Z	4	13	487						4	13	487
TOTAL (SRSS)										2217	2198	18747
F_H										3123		
121	X					1728	1242	13688		1728	1242	13688
	Y	1256	1908	12799						1256	1908	12799
	Z	9	5	470						9	5	478
TOTAL (SRSS)										2136	2277	18746
F_H										3122		

* SEE FIGURE 3

AVERAGE F_H = 2518 lbs AVERAGE F_V = 18105 ± 3067 lbs
= 21172 lbs (DOWN)
= 15038 lbs (UP)

4.1 and 4.2 Results

The corner nodes of the basket model interface with the support grid; therefore, it is necessary to evaluate the reaction loads at these locations for input to the grid analysis. These results are shown in Tables 3 and 4. Summarizing the results from Tables 3 and 4 the loads on each corner are given in Table 5.

TABLE 5

BASKET WEIGHT Lbs	HORIZONTAL FORCE Lbs	MAX DOWNWARD FORCE Lbs	MAX UPWARD FORCE Lbs
7,625	1,515	12,638	9,246
13,790	2,518	21,172	15,038

These loads are input to the grid analysis. The internal stress levels in the basket were checked and found to be acceptable.

Tube to Base Plate Weld

The maximum horizontal force on the tube to base plate weld is ≈ 925 lbs.* The 3/32 weld is on at least 3 sides of the tube. The weld stress therefore is

$$\tau = \frac{925}{(3/32)(3)(.707)(6.5)} = .7 \text{ ksi} < 21 \text{ ksi}$$

*From computer output; heavy basket seismic, Element 111, Node 97, F_H = 652 lbs for x and y shakes therefore F_{total} = 922 lbs.

4.2 Grid Structure Analysis

4.2.1 Grid Modelling

Two segments of the support grid system were modelled as shown in Figure 7 for analysis using ANSYS. The section properties were as follows: (Dwg. 18107-D Rev. 2)

(1) Vertical support columns

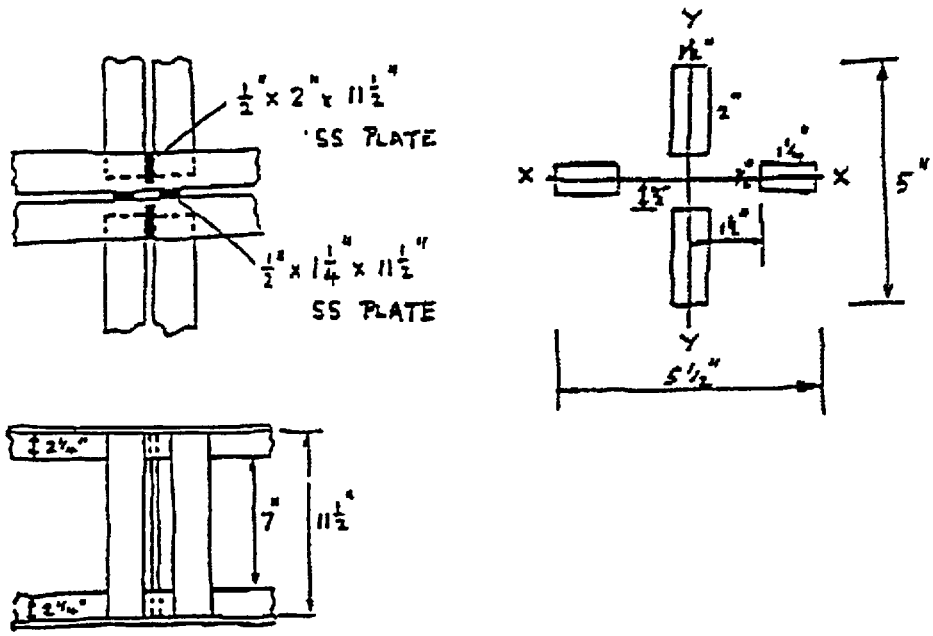

Area = 2(2x1/2) + 2(1-1/4x1/2) = 3.25 in^2
For full shear continuity (this was checked as a valid assumption using a test case ANSYS run)

$$I_{xx} = \left[\frac{\frac{1}{2}(2)^3}{12} + \frac{1}{2}(2)1.5^2\right]x2 = 5.17\ in^4$$

$$I_{yy} = \left[\frac{\frac{1}{2}(1\frac{1}{4})^3}{12} + \frac{1}{2}(1\frac{1}{4})(1.5+.625)^2\right]x2 = 5.81\ in^4$$

A strut of length
12" was used in the grid model with constant properties A = 3.25 and I = 5.2. This is conservative.

(2) Diagonal struts

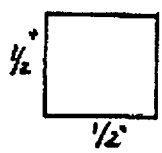

1/2"x1/2" SQ. SS BAR Area = 0.25 in^2

$$I = \frac{\frac{1}{2}\left(\frac{1}{2}\right)^3}{12} = .00521\ in^4$$

(3) Corner support posts

These are short and stiff. The properties were assumed as follows

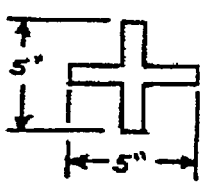

A = 9.0 in^2
I = 10.76 in^4

(4) Horizontal struts

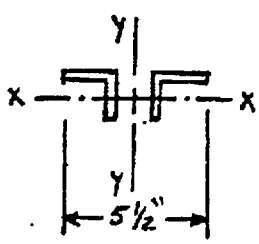

2 → 2-1/2"x2-1/2"x1/4" SS ANGLE

A = 2.375 in^2
I_{xx} = 1.406
I_{yy} = 3.628

SDRC__I-DEAS 2.5B: Model Creation 3-APR-86 16:24:20

MORRIS GRID ANALYSIS

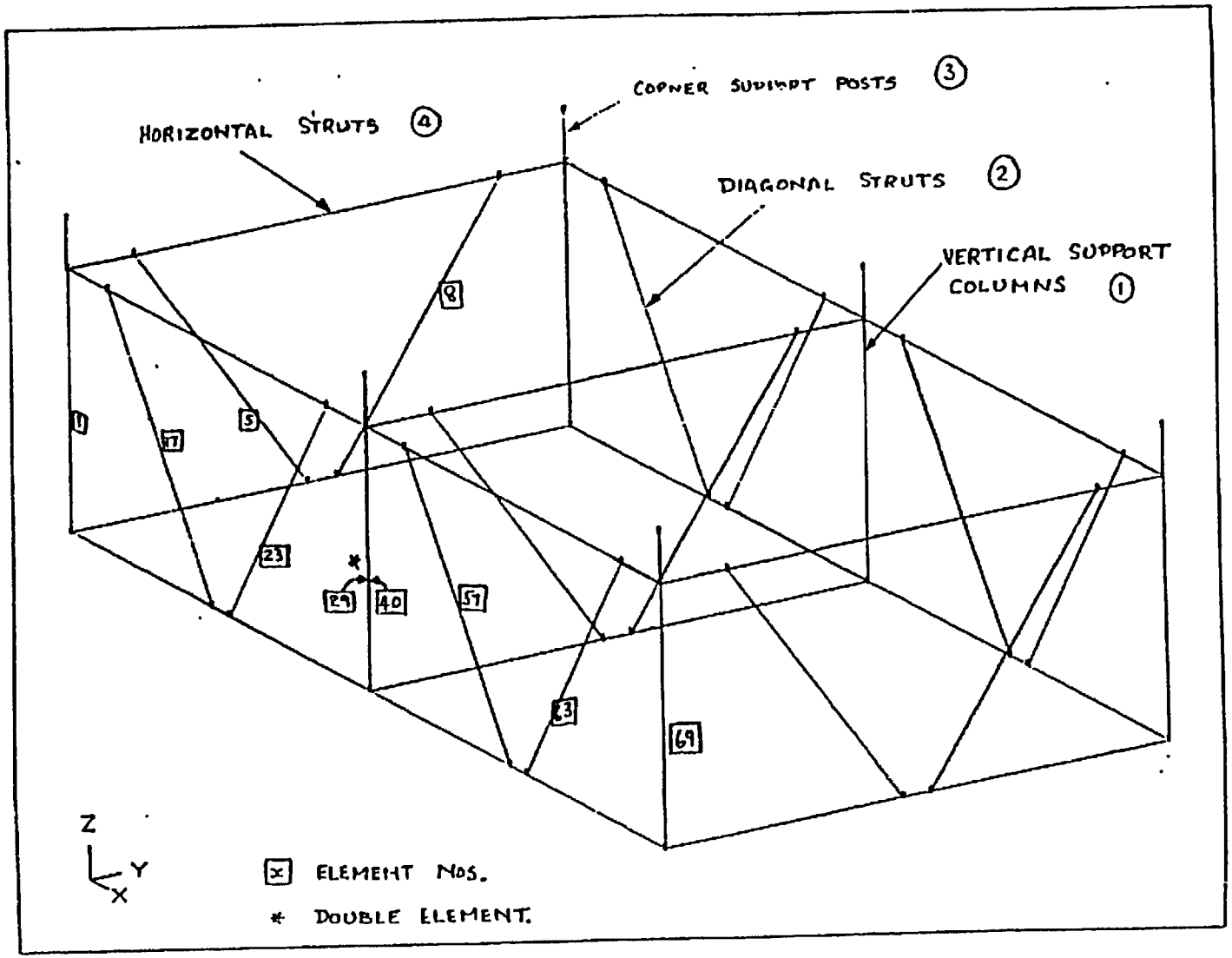

Figure 7
GRID MODEL

4.2.2. Grid Analysis

The horizontal and vertical forces given in Table 5 were applied to the grid system in combinations depending upon the earthquake directions (assuming the baskets act independently on the grid - conservative) and the combinations of basket weights. Basket weight combinations are required to give a realistic limit to the grid capacity since heavy baskets will be mixed with lighter baskets in any realistic storage arrangement.

The analysis assumes that 3 light baskets and 1 heavy basket are arranged as shown in Figure 8. On this basis 3 earthquake directions were considered to give 3 cases for each basket weight. These cases are shown in Figure 9.

The resulting stresses in the members for each of these cases and weights are shown in Table 6 for the vertical columns of the grid. The results for the diagonal struts are given in Table 8 and the results in the vertical columns in the edge of the grid for an accumulation of 18 sliding grid sections in Table 7.

The grid analysis assumes that the lower side in contact with the pool liner does not slide, i.e., in the finite element analysis the lower grid nodes are considered fixed, except for the sliding analysis of Table 7.

For sliding to occur

$$\frac{W}{g}a_H > F \qquad \text{friction force}$$

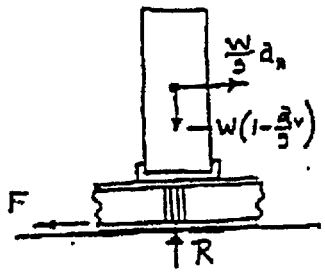

Now $F = \mu R$ when sliding is about to occur

$$R = W\left(1 - \frac{a_v}{g}\right)$$

$$\therefore \frac{W}{g}a_H > \mu W\left(1-\frac{a_v}{g}\right)$$

Where a_v = vertical acceleration
a_h = horizontal acceleration

$$\therefore \text{if} \quad \mu < \frac{a_H/g}{(1-a_v/g)}$$

then sliding could occur

(See pg 25)

VERTICAL COLUMN STRESSES (SSE)

BASKET TYPE *	RUN #	CASE #	ELEMENT # 1			ELEMENT # 29			ELEMENT # 40			PT II
			σ_m psi	σ_b psi	$\sigma_m+\sigma_b$ psi	σ_m psi	σ_b psi	$\sigma_m+\sigma_b$ psi	σ_m psi	σ_b psi	$\sigma_m+\sigma_b$ psi	$\frac{\sigma_m}{F_a} + \sum \frac{\sigma_b}{F_b}$
4L	1	A	10501	4092		14489	6360		14489	6360		
		B	11768	5277		1974	3307		1974	3307		
		C	14840	8552	23392	10541	2068		10541	2068		.65
3L 1H	2	A	12143	4957		16937	7417		16937	7417		
		B	13619	6131		2374	3854		2374	3854		
		C	17346	9072	26418	12190	2391		12190	2391		.74

TABLE 6

*Basket Types L - Light W = 7625 lbs.
H - Heavy W = 13790 lbs.

σ_m = Direct stress in colum -psi
σ_b = Maximum bending stress -psi
PT II of AISC allows $\sigma_b > \sigma_y$ for factored (SSE) loads.

$$\sigma_m \leq 0.9\ \sigma_y = 0.9 \times 35 = 31.5 \text{ ksi}$$
$$\sigma_b \leq 1.5\ (.9\sigma_y) = 47.3 \text{ ksi} \quad \text{PT II}$$

$$\frac{\sigma_m}{31.5} + \frac{\sigma_b}{47.3} \leq 1 \qquad \text{Pt II}$$

Figure 8

FUEL BASKET LOADING ARRANGEMENTS
IN BASINS 1 & 2 AT THE MORRIS OPERATION

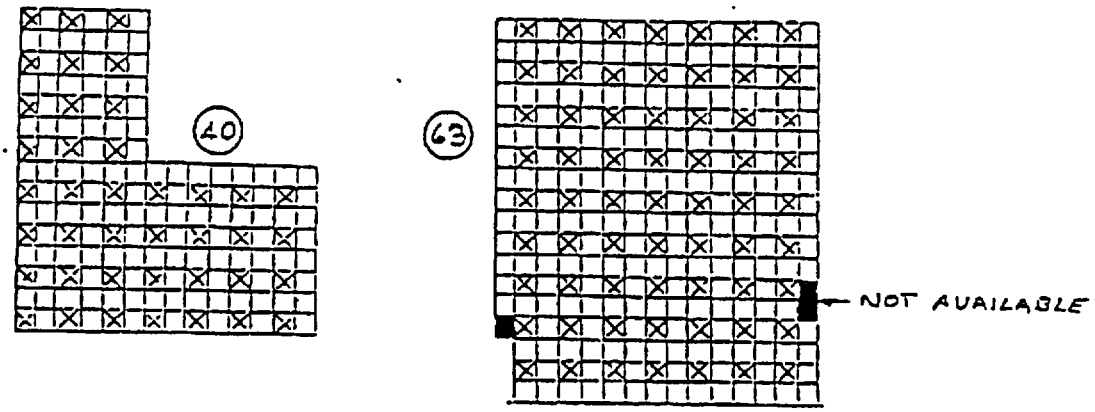

103 HEAVY BASKETS @ 13790 lbs
312 LIGHT BASKETS @ 7625 lbs

TOP OF DOCUMENT

EARTHQUAKE COMBINATIONS APPLIED
TO SUPPORT GRID

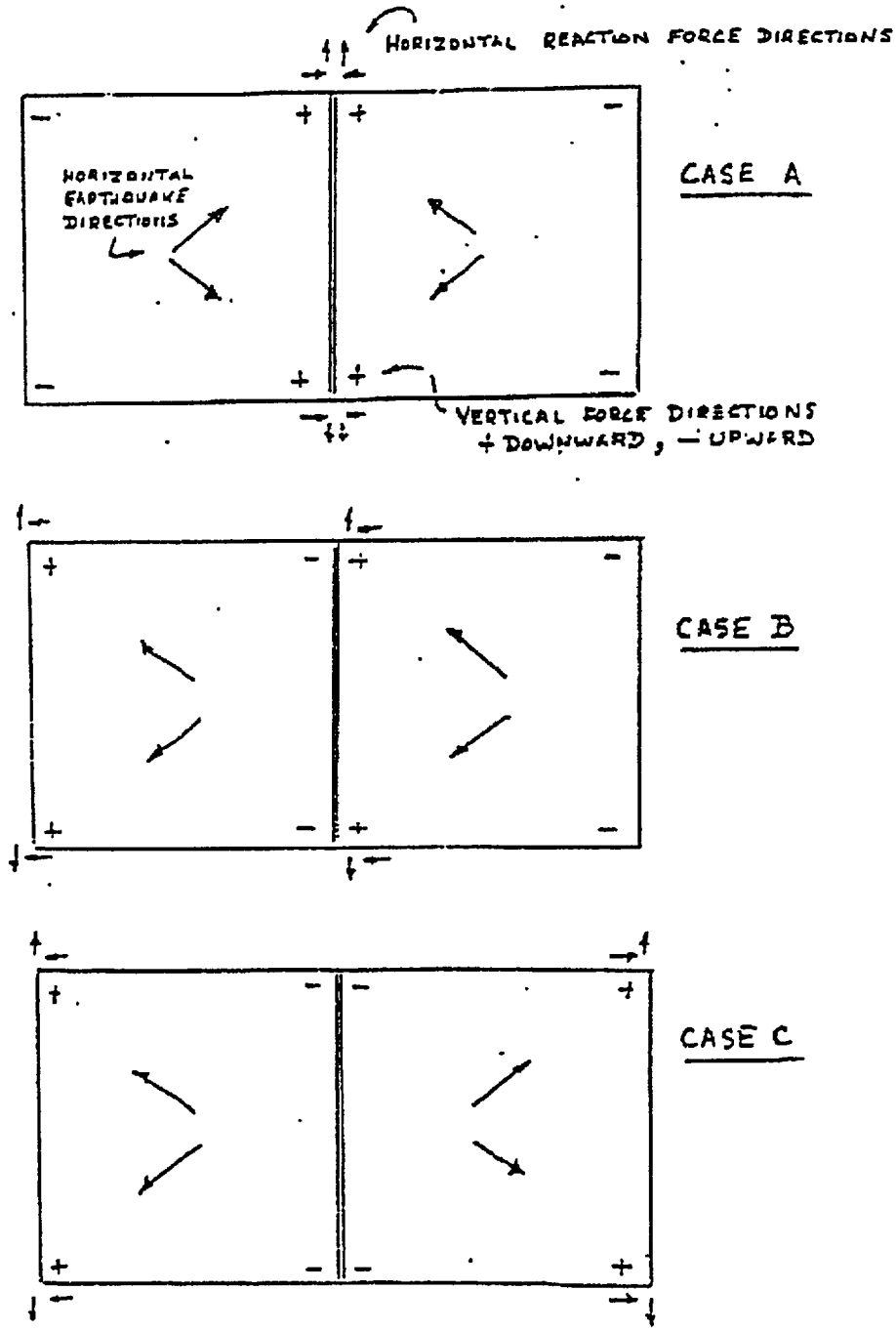

Figure 9

TOP OF DOCUMENT

In the frequency range 5 to 12 hz $a_H = 0.60g$
$a_V = 0.2g$

$$\mu < \frac{.6}{.8} = .75$$

For wet steel on steel this is possible; therefore, the stresses in a "sliding" rack system were evaluated in order to check the cumulative effect of horizontal forces transmitted to the edge of the rack assembly. Two ANSYS runs were done with the following input:

Run #3

Horizontal force on basket support posts F_X = 1515 lbs.

Forces due to the vertical earthquake

ΣF_Z = 407 + 409 + 423 + 408 = 1647 lbs.

W = 7625 lbs. therefore R = 7625 -1647 = 5978 lbs.

} from TABLE 3

Assume the friction coefficient wet steel on steel μ=0.4

then μR = 0.4 (5978) = 2391 lbs.

Therefore the net horizontal force = 2 (1515) -2391 = 639 lbs.

For 18 rack assemblies, 16 of these horizontal forces are applied to the 2 rack model.

Therefore horizontal force applied to each post = $16 \times \frac{1515}{2}$ = 5112 lbs

Therefore F_X=2556 lbs. applied to top and bottom of rack.

These cumulative horizontal forces are combined with the overturing forces (non-cumulative) F_Z of Table 3.

Run #4

F_X = 2518 lbs.
ΣF_Z = 1858 lbs. } Table 4

W = 13790 lbs. Therefore R = 13790 -1858 = 11932 lbs.

μR = .4 (11932) = 4773 lbs.

F_H = 2 (2518) - 4773 = 263 lbs.

F_X = 16 x 5424/2 = 2104 lbs. therefore

F_X = 1052 lbs. top and bottom

The results of the grid column stresses for these 2 runs 3, 4 are shown in Table 10.

The interaction limits for struts under factored loading conditions are taken from Section 2.4, Reference 5, Part 2 of Part 5. (See this reference for nomenclature.)

$P_{cr} = 1.7\ A\ F_a'$ $\quad A = 1/2 \times 1/2 = 0.25\ in^2$ & $\sigma_{cr} = F_a$

therefore

$\sigma_{cr} = 1.7\ F_a'$ $\quad$ Now $F_a' = 16.07$ ksi therefore $F_a = 27.3$ ksi

$F_b = 47.3$ ksi

The interaction limit for direct and bending stresses is

$$\frac{P}{P_{c'}} + \frac{C_m M}{\left(1 - \frac{P}{P_e}\right) M_m} \leq 1$$

which converts to

$$\frac{\sigma_m}{F_a} + \frac{C_m \sigma_b}{\left(1 - \frac{\sigma_m}{\sigma_e}\right) F_b} \leq 1$$

Cm ≈ 0.06 para 1.6.1 See 5 Ref. 5

$$P_e = \frac{23}{12} A F_e'$$

$$F_e' = \frac{12 \pi^2 E}{23 \left(\frac{k \ell_b}{r_b}\right)^2}$$

VERTICAL COLUMN STRESSES (SSE)
IN EDGE GRID WITH ACCUMULATION
OF 18 SLIDING GRID SECTIONS

BASKET WEIGHT	RUN #	CASE #	ELEMENT # 69			$\frac{\sigma_m}{F_m} + \frac{\sigma_b}{F_b}$	
			σ_m	σ_b	$\sigma_m + \sigma_b$		
7625	3	C	15046	6955	22001	.62	$\leq .65$
3@ 7625 1@ 13790	3 & 4	C	17594	8083	25677	.73	$\leq .74$

FROM TABLE 6

LIMIT: $\frac{\sigma_m}{31.5} + \frac{\sigma_b}{47.3} \leq 1.0$ Pt II

TABLE 7

Since the interaction limits for a non-sliding base (Table 6) are higher than for the sliding grid the sliding grid will not be considered as the limiting condition.

The stresses in the diagonal struts are also examined for possible limits on basket weights. The results are contained in Table 8.

For K = 1.0 $\quad l_b = 10'' \quad r_b = .144''$

$$F_e' = \frac{12\,\pi^2\,28\,10^6}{23\,(69.4)^2} = 30{,}020 \text{ psi}$$

$$\therefore P_e = \frac{23}{12}(.25)\,30020 = 14385 \text{ psi}$$

$$\& \ \sigma_e = \frac{P_e}{A} = \frac{14385}{.25} = 57.5 \text{ ksi}$$

$$\therefore \frac{\sigma_m}{27.3} + \frac{0.6\,\sigma_b}{\left(1 - \frac{\sigma_m}{57.5}\right)47.3} \leq 1.0$$

This is the interaction equation.

From Table 8 For Run #1

$\sigma_m = 8213$ psi $\qquad \sigma_b = 1705$ psi

$$\frac{8213}{27300} + \frac{0.6\,(1705)}{\left(1 - \frac{8213}{57300}\right)47300} = .33 \leq 1.0 \ \therefore \text{OK!}$$

For Run #2

$\sigma_m = 13714$ psi $\qquad \sigma_b = 2826$ psi

$$\frac{13714}{27300} + \frac{0.6\,(2826)}{\left(1 - \frac{13714}{57300}\right)47300} = .55 \leq 1.0 \ \therefore \text{OK!}$$

FOR OFFICIAL USE ONLY

STRESSES IN DIAGONAL STRUTS
(SSE)

The elements were reviewed and Element #57 was determined to have the maximum stress levels.

RUN #	CASE #	σ_m psi	σ_b psi	$\sigma_m + \sigma_b$ psi	$\frac{P}{P_c} + \frac{C_m M}{\left(1-\frac{P}{P_e}\right) M_m} \leq 1$ *
1	A	6763	449	7212	
	B	8213	1705	9918	.33
	C	5203	249	5452	
2	A	11262	743	12005	
	B	13714	2826	16540	.55
	C	8533	407	8940	

* SEE PAGE 26

TABLE 8

Effective length of struts $\ell = 10''$

For a $\frac{1}{2}'' \times \frac{1}{2}''$ square section $r = .144''$

$\therefore \frac{K\ell}{r} = 69.4$ with $K = 1.0$ for secondary members.

$\therefore F_a' = 16.5$ KSI for $\sigma_y = 36$ KSI $\therefore F_a' = 16.5\left(\frac{35}{36}\right) = 16.07$ KSI Ref 5 Table 1-36 Section 5.

$\Sigma\sigma = \sigma_m + \overbrace{\sigma_{bx} + \sigma_{by}}^{\sigma_b}$ = combined stress from ANSYS

$\therefore \sigma_b = \Sigma\sigma - \sigma_m$ = total bending in corners of bar.

Since the interaction limits for the struts are less than those for the support columns, the columns will be the limiting member for basket weights.

The horizontal members are stressed lower than the diagonal struts and therefore these results are not recorded. The maximum horizontal force transmitted to the outer wall bracing can be accepted by the bracing components with a high margin of safety.

Summary:

The limiting components for basket loading are the vertical support columns under SSE loading.

The weight limits are:

103 heavy baskets at 13790 lbs.
312 light baskets at 7625 lbs. in the limiting arrangement as shown in Figure 8.

4.3 LATCH ANALYSIS

For components in the lifting load path

$F_t = 1/5\ \sigma_y = 1/5\ (35) = 7$ ksi tension

$F_y = 2/3\ F_t = 4.7$ ksi shear

Clevis: Dwg. C6221 - 17998-C

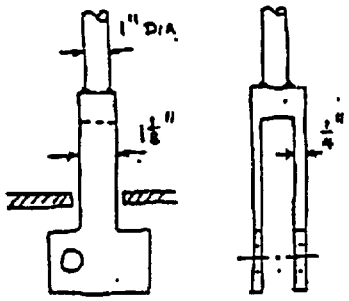

Rod: $A = \frac{\pi}{4}(1)^2 = .785 \text{ in}^2$

$\sigma_R = \frac{13990}{.785}(1/4) = 4455 \text{ psi}$

$< 7000 \therefore \text{OK}$

Side straps:

$A = 1\frac{1}{8} \times 1/4 \times 2 = .5625 \text{ in}^2$

$\sigma_S = \frac{13990}{.5625}(1/4) = 6218 \text{ psi}$

$< 7000 \therefore \text{OK}$

Add 200 lbs. to basket weight for entrained water

Basket baseplate:

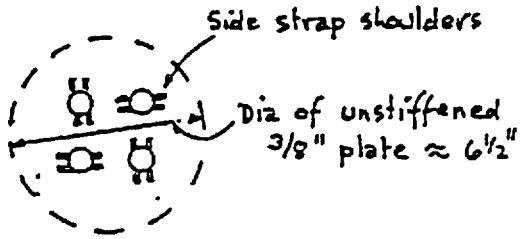

Assume load is centralized

W = 13790 lbs.

Approximate shear area

$= \pi\ (6.5)\ 3/8 = 7.66 \text{ in}^2$

Therefore shear stress

$\tau = 13790/7.66 = 1.83 \text{ ksi} < 4.7 \text{ ksi}$

therefore OK.

Latch bar: Dwg. C6221-17988-E Rev. 0

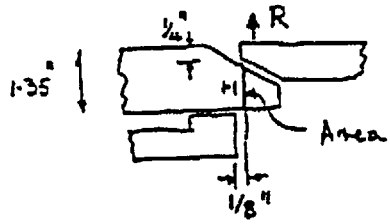

$A = 1.1 \times 1 = 1.1 \text{ in}^2$

Shear stress $\tau = \frac{R}{1.1} = .909\ R$

The maximum uplift force from the basket analysis, see Table 5, is 15038 lbs

Therefore max = .909 (15038)
= 13.7 ksi <21 ksi
therefore OK.

Bending moment

M = 1/8 R

$$\sigma_b = \frac{M}{I} y = \frac{1}{8} R \frac{(t/2)\,12}{(1)\,t^3} = \frac{R}{8}\frac{6}{t^2} = \frac{15038(6)}{8(1.1)^2} = 9.3 \text{ ksi} < 34.7 \text{ ks} \quad \therefore \text{OK}$$

Combined bending and shear

$$\tau_{max} = \sqrt{\frac{\sigma_b}{2}^2 + \tau^2} = \sqrt{\frac{9.3^2}{2} + 13.7^2} = 15.2 \text{ KSI} < 21 \text{ KSI} \therefore \text{OK}$$

Grid corner pocket: Dwg 17977-D

A = (.917x.5 -.125x.343/2.)x2-0.874 in^2

Weld area

$$= \underbrace{(.68 \times 2 + 1.5) \times 1/4}_{\text{GROOVE}} + \underbrace{2 \times 3/4 \times 1/4 \times .707}_{\text{FILLET}}$$

$$= .715 + .265 = 0.98 \text{ in}^2$$

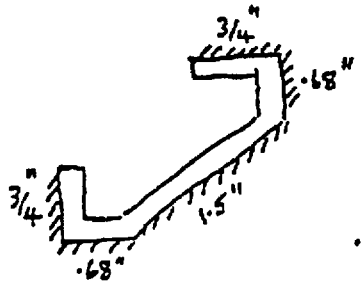

From the basket analysis - max horizontal force H = 2518

∴ horizontal shear τ = 2518/.98 = 2.6 ksi < 21 ∴

Tensile stress σ = 15038/.98 = 15.3 ksi < 31.5 ∴

Outer guide: Dwg. C6221-17988-E

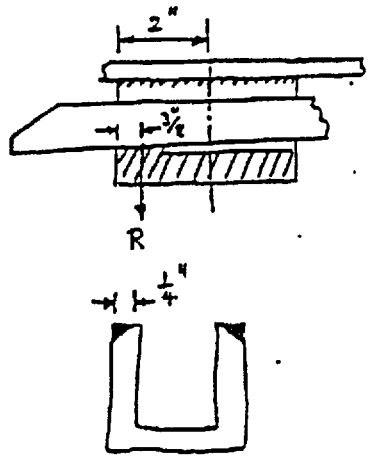

Bending moment on guide

$M = (2 - .375)R = 1.625R$

Weld area = 4x1/4x2 = 2.0 in^2 (groove)

$I = bh^3/12 = 2(1/4)(4)^3/12 = 2.67\ in^4$

$Z = \frac{I}{h/2} = 2.67/2 = 1.335\ in^3$

Direct stress on weld $\sigma_m = R/2.0$

$\sigma_m = 15038/2.0 = 7.5\ ksi < 31.5\ ksi \therefore ok$

Bending stress : —— $\sigma_b = \frac{M}{Z} = \frac{1.625(15038)}{1.335} = 18.3\ ksi < 34.7\ ksi \therefore ok$

Interaction : —— $\frac{\sigma_m}{31.5} + \frac{\sigma_b}{34.7} \leq 1.0$

$\therefore \frac{7.5}{31.5} + \frac{18.3}{34.7} = .77 < 1.0 \therefore OK$

Lifting bails: BWR baskets - See Appendix A1

4.5 Pit Gate Guard Analysis (See Appendix A3)

4.6 Canister Lifting Device (See Appendix A4)

5. CONCLUSIONS

103 heavy baskets weighing 13790 lbs. and 312 light baskets weighing 7625 lbs. can be installed on the Morris grid in basins 1 and 2 in the limiting arrangement shown in Figure 8. This is based on AISC limits for the factored loading of the SSE.

The lifting bails are capable of lifting the 13790 lbs basket.

TOP OF DOCUMENT

6. REFERENCES

1. "BWR Spent Fuel Storage Option," J. D. Kesman and E. E. Voiland to J. E. Van Hoomissen (Sept. 4, 1985).

2. "Engineering Requirements for Consolidation of BWR Fuel at the Morris Operation," J. D. Kesman to C. King (Nov. 7, 1985).

3. "Feasibility of Increased Fuel Storage Loads at the General Electric Morris Operation," R. J. Hill, W. H. Whitling, April 1986 XL-610-86090.

4. Telecopy Transmission 9/15/86 R. J. Hill/W. H. Whitling to J. D. Kesman, Morris Operation (See Appendix 1 of this Report).

5. American Institute of Steel Construction (AISC) Handbook. 7th Edition (1970).

6. Private Communication, W. C. Wheadon to W. H. Whitling (March 1986).

7. "Feasibility of Increased Fuel Storage Loads at the General Electric Morris Operation," R. J. Hill, W. H. Whitling, November 1986, XL-610-86336.

TOP OF DOCUMENT

COMPUTATION/RECORD SHEET

PREPARED BY: M. Hall	GENERAL ELECTRIC	PAGE NO: A1-1
CHECKED BY: [illegible]	NUCLEAR SYSTEMS TECHNOLOGY OPERATION	
DATE: 4/7/87	TITLE: LIFTING BAIL	

LIFTING BAIL — DWG # C6221-18114-D REV 0
LIFTING ROD DWG # C6221-17999-B REV 0

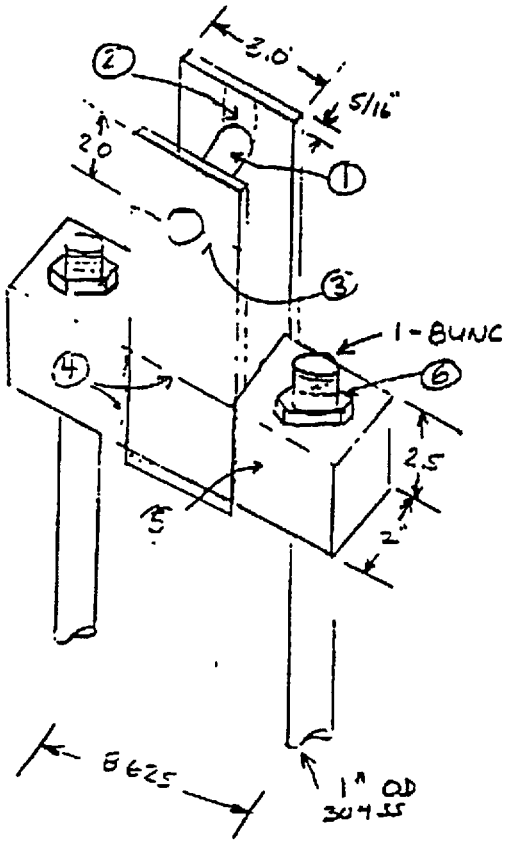

THERE ARE 6 LOCATIONS TO ANALYZE.
W = 7000 lbs (see below)

(1) THE PIN 1" OD
17-4 PH COND H-1100 OR H-1150, R32-36

AREA OF PIN = $\frac{\pi}{4}(1)^2 2 = 1.571$ in²

$\tau = \frac{7000}{1.571} = 4456$ psi

(2) TEAR OUT AREA
= 2.0 × 5/16 = 2.5 in²

$\tau = \frac{7000}{2.5} = 2800$ psi

(3) TENSILE AREA - MINIMUM AT HOLE
AREA = .25(3-1)(5/16) = 1.25

$\sigma = \frac{7000}{1.25} = 5600$ psi

(4) WELD AREA
= [(4)(3)(.25) + (.25+.312)(4)(2.5)] 707
= 6.09 in²

$\tau = \frac{7000}{6.09} = 1149$ psi

THERE ARE 2 BAILS FOR EACH BASKET SO THE WEIGHT LIFTED IS 7000 lbs EACH (14,000 lbs TOTAL BASKET WEIGHT)

(6) 1-8UNC THREADED ROD
$A_T = .606$

$\sigma = \frac{3500}{.606} = 5776$ psi

(5) BENDING MOMENT
$= \frac{7000}{2}\left(\frac{8.625}{2}\right) = 15094$ in-lb

$I = \frac{bh^3}{12} = \frac{2(2.5)^3}{12} = 2.60$

$\sigma = \frac{15094(1.25)}{2.26} = 8348$ psi

TOP OF DOCUMENT

COMPUTATION/RECORD SHEET

PREPARED BY:	GENERAL ELECTRIC	PAGE NO: A1-2
CHECKED BY:	NUCLEAR SYSTEMS TECHNOLOGY OPERATION	
DATE: 4/7/87	TITLE: LIFTING BAIL	

STRESS LIMITS

FOR COMPONENTS IN THE LIFTING LOAD PATH

$F_t = 1/5\ \sigma_y$

$F_y = 2/3\ F_t = 2/15\ \sigma_y$

FOR THE 304 SS COMPONENT

$F_t = 1/5\ (35{,}000) = 7{,}000$ psi Tension

$F_y = 2/3 \cdot 7000) = 4{,}700$ psi Shear

FOR THE 17-4 PH PIN

$\sigma_y = 105{,}000$ psi (FOR H-1150 HEAT TREATMENT)

$F_t = 1/5\ 105{,}000 = 21{,}000$ psi Tension

$F_y = 2/3\ 21{,}000 = 14{,}000$ psi Shear

STRESS SUMMARY

AREA	1	2	4	3	5	6
STRESS	4456	2900	1149	5600	8348	5776
ALLOWABLE	14000	4700	4700	7000	10500	7000
MARGIN	.32	.60	.24	.80	.80	.83

ALL MARGINS ARE ≤ 1.0 THEREFORE ALL AREAS ARE OK!

85-064-01

TOP OF DOCUMENT

COMPUTATION/RECORD SHEET

PREPARED BY: R J Hill	GENERAL ELECTRIC NUCLEAR SYSTEMS TECHNOLOGY OPERATION	PAGE NO: A2-1
CHECKED BY: [illegible]		
DATE: 6/12/87	TITLE:	

STRUCTURAL PROPERTIES

SQUARE TUBE (BEAM PROPERTIES) DWG # C6221-17994-B REV. 1

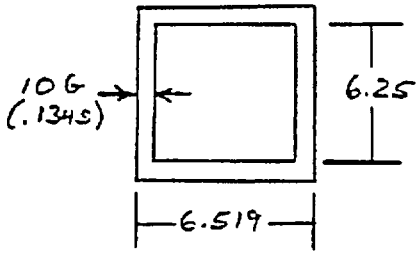

$A = 6.519^2 - 6.25^2 = 3.435 \text{ in}^2$

$I = \frac{6.519^4 - 6.25^4}{12} = 23.35 \text{ in}^4$

FOR A HOLLOW RECTANGLE ($a \times b, t, t_1$)
(ROARK 4th Ed TABLE II

TORSIONAL MODULUS $J = \frac{2tt_1(a-t_1)^2(b-t_1)^2}{at + bt_1 - t^2 - t_1^2} =$

FOR A HOLLOW SQUARE
$A = b$ & $t = t_1$ $\therefore$ $J = t(a-t)^3$

$\therefore J = .1345(6.519 - .1345)^3 = 35.0 \text{ in}^4$

GUIDE PLATE (BEAM PROPERTIES) DWG # C6221-17988-E REV. 1

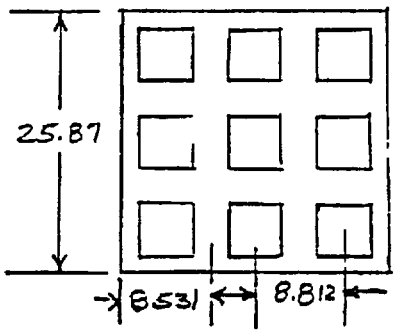

AT THE MIDHEIGHT AND TOP OF THE BASKET, THERE ARE 3/16" THICK GUIDE PLATES. THESE ARE REPRESENTED AS BEAMS RUNNING FROM THE CENTER TO CENTER.

$A = (8.627)(.1875) = 1.60 \text{ in}^2$

$I_x = 8.627\frac{(.1875)^3}{12} = .0047 \text{ in}^4$

$I_y = \frac{.1875(8.627)^3}{12} = 9.70 \text{ in}^4$

$J = \frac{\pi}{32}(.1875)^4 = .000121 \text{ in}^4$

BOTTOM PLATE (SHELL ELEMENT)

THIS IS REPRESENT BY SHELL ELEMENTS OF THICKNESS:

$T = 5/8"$ OUTSIDE OF THE SQUARE TUBES

$T = 6"$ UNDERNEATH THE SQUARE TUBES. THIS IS A ARBITARY VALUE INDICATING A RIGID PLATE UNDER THE TUBES.

TOP OF DOCUMENT

COMPUTATION/RECORD SHEET

PREPARED BY:	GENERAL ELECTRIC	PAGE NO.
CHECKED BY:	NUCLEAR SYSTEMS TECHNOLOGY OPERATION	
DATE: 5/12/87	TITLE:	

STIFFENING PLATES FOR BOTTOM PLATE (BEAM ELEMENTS)
DWG # C6221-17973-D PART # 11

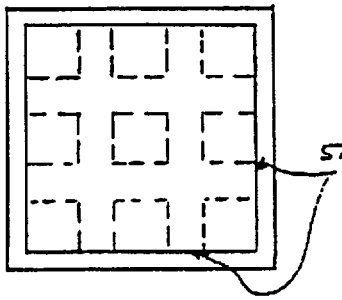

THE PLATES ARE 4" x 1/4"

AREA = 4 x 1/4 = 1 IN²

$$I_{yy} = \frac{(1/4)(4)^3}{12} = 1.333 \text{ in}^4$$

$$I_{zz} = \frac{4(1/4)^3}{12} = .005 \text{ in}^4$$

$$J \approx \frac{\pi}{32}(1/4)^4 = .0039 \text{ in}^4$$

DIAGONAL BRACING (BEAM ELEMENTS)
DWG # C6221-17983E PART # 13

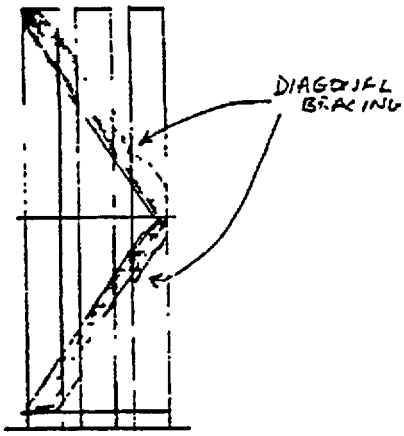

THE PLATES ARE 4" x 3/16"

AREA = 4 x 3/16 = .75 IN²

$$I_{yy} = \frac{4(3/16)^3}{12} = .0021973 \text{ in}^4$$

$$I_{zz} = \frac{3/16(4)^3}{12} = 1.0 \text{ in}^4$$

$$J \approx \frac{\pi}{32}(3/16)^4 = .0001213 \text{ in}^4$$

COMPUTATION/RECORD SHEET

PREPARED BY:	GENERAL ELECTRIC	PAGE NO.
CHECKED BY:	NUCLEAR SYSTEMS TECHNOLOGY OPERATION	
DATE: 5/14/87	TITLE:	

WEIGHT OF CONSOLIDATED BWR FUEL (2:1 CONSOLIDATION)

TOTAL WEIGHT OF FUEL AND CLADDING = 605 lbs
WEIGHT OF CANISTER = 100 lbs } FROM A FAX 9/18/86

FOR A 100 lb CANISTER THE THICKNESS WOULD BE:

$$100 = .29 \frac{\pi}{4}\left[6.125^2 - (6.125 - 2t)^2\right] 156 = 35.531\,(24.5t - 4t^2)$$

$$\therefore\ t^2 - 6.125t + .7036 = 0 \rightarrow t = \frac{6.125}{2} \pm \frac{1}{2}\sqrt{6.125^2 - .7036}$$

$$t = .117''$$

THE CONSOLIDATED FUEL ASSEMBLY WILL CONSIST OF ONE OF THE FUEL + CLADDING + THE CANISTER

CONSOLIDATED FUEL ASSEMBLY WEIGHT = 2(605) + 100 = 1310 lbs
WEIGHT OF SQUARE BASKET TUBE = 3.435 (156)(2") = 155.4 lbs
VOLUME OF CONSOL. FUEL = $\frac{\pi}{4}(.563)^2 156 \cdot 2)(7.17)$ = 3805.9 in³
VOLUME OF CANISTER = 100/.29 = 344.8 in³
VOLUME OF SQUARE BASKET TUBE = 3.435(156) = 535.9 in³

TOTAL VOLUME = 3805.9 + 344.8 + 535.9 = 4686.6 in³
WEIGHT OF DISPLACED WATER = 4686.6 (62.4)/1728 = 169.2 lbs
SUBMERGED WEIGHT OF FUEL + CAN + BASKET = 1310 − 169.2 + 155.4 = 1296.2 lbs

ENTRAINED WATER (ADDED MASS)

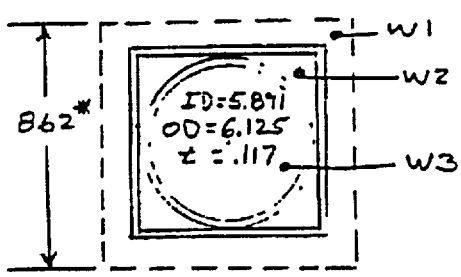

THERE ARE 3 CONTRIBUTIONS TO THE ADDED MASS

W1 = WATER ENTRAINED BETWEEN THE SQUARE CHANNELS (HORIZONTAL MOTION ONLY)
W2 = WATER BETWEEN CANISTER OD & THE INSIDE OF SQUARE CHANNEL
W3 = WATER ENTRAINED WITHIN CONSOLIDATED FUEL

AREA OF FUEL
$= \frac{3805.9}{156} = 24.4\ in^2$

$$W1 = \rho_w A_1 \ell = \frac{62.4}{1728}\left[8.62 - 6.519^2\right] 156 = 179.18$$

* 25.87/3 = 8.62 AVERAGE SPACING

TOP OF DOCUMENT

COMPUTATION/RECORD SHEET

PREPARED BY:	GENERAL ELECTRIC	PAGE NO.
CHECKED BY:	NUCLEAR SYSTEMS TECHNOLOGY OPERATION	A2-4
DATE: 5/14/87	TITLE:	

$$W2 = \frac{62.4}{1728}\left[6.25^2 - \frac{\pi}{4}6.125^2\right]156 = 54.07 \text{ lbs}$$

$$W3 = \frac{62.4}{1728}\left[\frac{\pi}{4}6.891^2 - 24.4\right]156 = 16.1 \text{ lbs}$$

TOTAL ADDED MASS (HORIZONTAL MOTION)
$= 179.18 + 54.07 + 16.1 = 249.35$ lbs

THE AREA OF THE BEAM USED TO REPRESENT THE FUEL BASKET TUBES IS THE AREA OF THE SQUARE BASKET TUBE – 3.435 IN². THIS GIVES THE CORRECT STIFFNESS. THE BEAM DENSITY THEN IS:

$$\rho_H = (1296.2 + 249.35)/[3.435 \times 156] = 2.884 \text{ lbs/in}^3$$
$$= .00746 \text{ lb-sec}^2/\text{in}^4$$

FOR THE VERTICAL MOTION N_1 IS EXCLUDED FROM THE MASS:

$$\rho_V = (1276.2 + 54.07 + 16.1)/[3.435 \times 156] = 2.550 \text{ lb/in}^3$$
$$= .00660 \text{ lb-sec}^2/\text{in}^4$$

COMPUTATION/RECORD SHEET

PREPARED BY: R L Hill	GENERAL ELECTRIC	PAGE NO: A2-5
CHECKED BY: W.H. White	NUCLEAR SYSTEMS TECHNOLOGY OPERATION	
DATE: 8/27/86	TITLE: STANDARD BWR FUEL WT	

STANDARD BWR BASKET $w = 7625$ lbs

PIPE = 8" SCH 10S (8 5/8" OD .148 WALL)

OD = 8.625"

ID = 8.329"

AREA $= \frac{\pi}{4}(8.625^2 - 8.329^2) = 3.94\ in^2$

$I = \frac{\pi}{64}(8.625^4 - 8.329^4) = 35.41\ in^4$

$J = 2I = 70.82\ in^4$

WEIGHTS

STANDARD BWR FUEL = 625 lbs

WEIGHT OF FUEL AND CLADDING ONLY = 605 lbs

WEIGHT OF CHANNELS ETC = 625 − 605 = 20 lbs

VOL = 20/.29 = 69 in³

BASKET = 3.94 in² (156) .29 = 178.25 lbs

TOTAL WEIGHT = 625 + 178.25 = 803.25 lbs

VOLUME OF FUEL = $\pi/4\,(.563)^2\,156\,(49) = 1903\ in^3$

TOTAL VOLUME = 1903 + 3.94 (156) + 69 = 2586.6 in³

DISPLACED WATER WEIGHT = 2586.6 (62.4) / 1728

= 93.4 lbs

ENTRAINED WATER VOLUME

$= \frac{\pi}{4}(8.329)^2(156) - (1903 + 69) = 6527.6\ IN^3$

WEIGHT OF WATER $= \frac{6527.6(62.4)}{1728} = 235.7$ lbs

ADDED WATER MASS BETWEEN CONTAINERS

VOLUME = 26.5 x 26.5 x 156 = 109551 IN³ TOTAL

WATER VOLUME = $109551 - \left(\frac{\pi}{4}(8.625)^2 156\right)9$

= 27520.5 in³

WEIGHT = 27520.5 (62.4) / 1728 = 993.80 lbs

TOP OF DOCUMENT

COMPUTATION/RECORD SHEET

PREPARED BY: R. Hill	GENERAL ELECTRIC	PAGE NO: A2-6
CHECKED BY: W.H. Whitlow	NUCLEAR SYSTEMS TECHNOLOGY OPERATION	
DATE: 8/27/86	TITLE:	

TOTAL WEIGHT OF FUEL TUBE FOR MODEL

$= 625 + 178.25 - 93.4 + 235.7 + \frac{993.8}{4} = 1056$ lbs

TOTAL WEIGHT $= 9(1056) = 9504$ lbs

DENSITY FOR MODEL $= \frac{9504 \text{ lbs}}{9(3.94)(156)} = 1.72$ lbs/in^3

$= 4.446 \times 10^{-3} \frac{\text{lb} \cdot \text{sec}^2}{\text{in}^4}$

TOTAL WEIGHT FOR VERTICAL MODEL

$= 625 + 178.25 - 93.4 + 235.7 = 945.55$ lbs

TOTAL WEIGHT $= 8510$ lbs

DENSITY FOR MODEL $= \frac{8510}{9(3.94)156} = 1.538$ lb/in^3

$= .003981$ lbsec^2/in^4

85-064-01

APPENDIX 3

PIT GATE GUARD ANALYSIS.

COMPUTATION/RECORD SHEET

PREPARED BY: W.H. WHITLING	GENERAL ELECTRIC	PAGE NO: A3-1
CHECKED BY: R.H. [illegible]	NUCLEAR SYSTEMS TECHNOLOGY OPERATION	APPENDIX 3
DATE: 10/28/86	TITLE: Cask Unloading Basin Doorway Guard	

EVALUATE THE DOORWAY GUARD TO SHOW THAT A DROPPED BASKET THAT TILTS TOWARDS THE UNLOADING PIT WILL BE BROUGHT TO REST BEFORE IMPACT WITH THE GUARD.

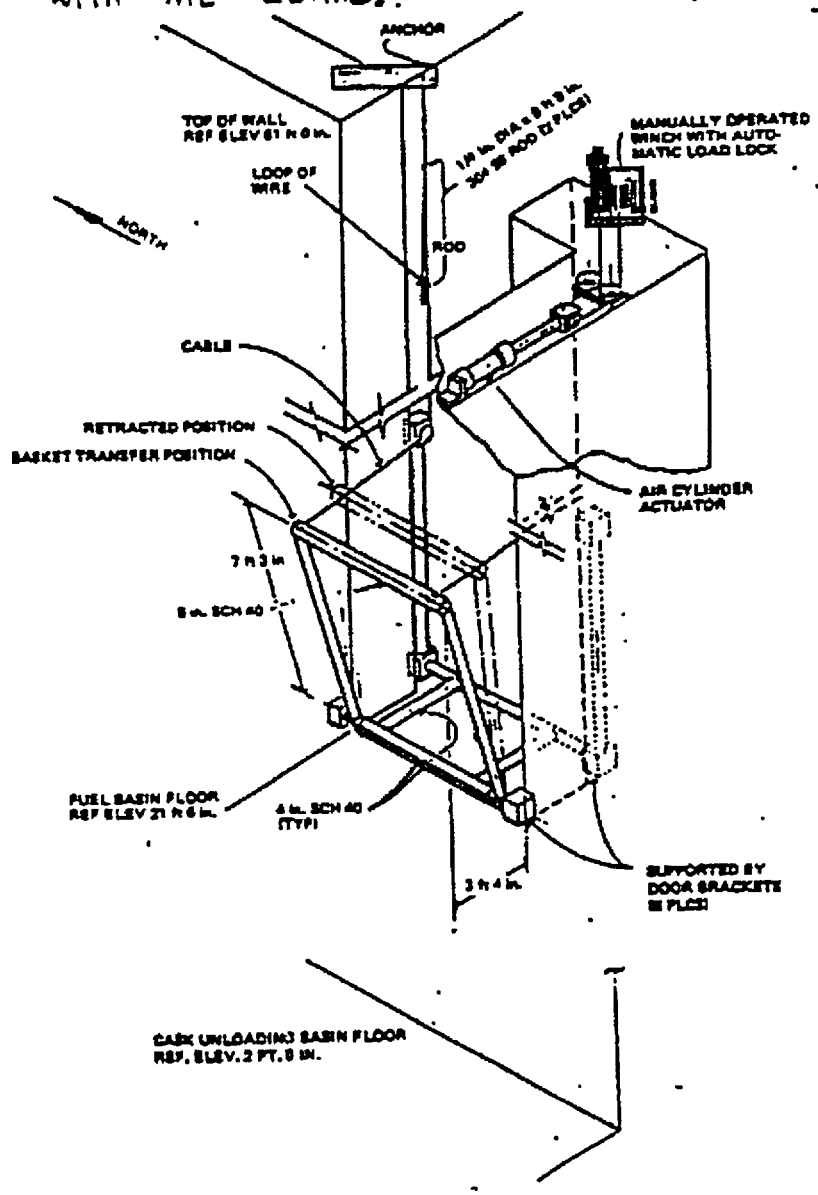

COMPUTATION/RECORD SHEET

PREPARED BY: W.H. Wh[illegible]	GENERAL ELECTRIC	PAGE NO: A3-2
CHECKED-BY: [illegible]	NUCLEAR SYSTEMS TECHNOLOGY OPERATION	
DATE: 10/28/86	TITLE: DOORWAY GUARD	

A = POSITION OF GUARD SUFFICIENT FOR A VERTICAL LIFT OF BASKET FROM THE UNLOADING PIT

B = POSITION OF GUARD WHEN CABLE HAS STRETCHED THE SS ROD TO 40% STRAIN i.e. $.4(105) = 42''$

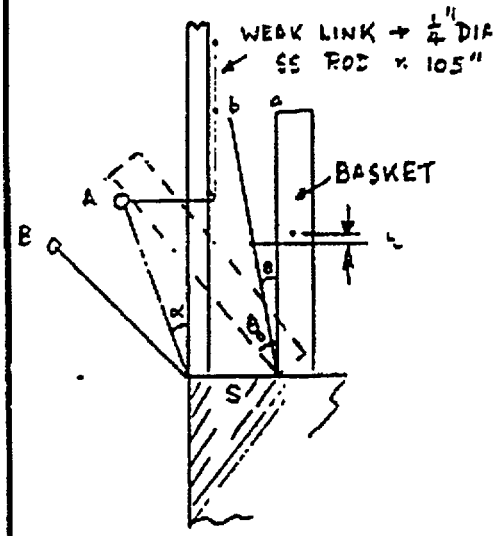

Assume the basket is dropped in a position S from the edge of the doorway such that the basket can rotate through $\theta_0°$ before impacting the guard in position A.

θ is the intermediate position from a to b.

During this interval the angular velocity goes from $\omega_a = 0$ to ω_b.

The potential energy $\Delta PE = Wh$ W = basket wt lbs

Kinetic energy $\Delta KE = \frac{1}{2} I (\omega_b^2 - \omega_a^2)$ $I = \frac{W}{g} k^2$ k = radius of gyr.

Assume the basket is a beam rotating about its end

$$k^2 = \frac{\ell^2}{3} + \frac{r^2}{4}$$

ℓ = length of basket"
r = "radius" of basket

Drag energy $\Delta DE = FD \cdot \delta$

Drag force $FD = \sum A \frac{C_D}{2} \frac{\rho}{g} v_m^2$ where v_m = mean velocity a to b $= r_m \omega_m = r_m \left(\frac{\omega_b + \omega_a}{2}\right)$

Consider the basket in 4 segments

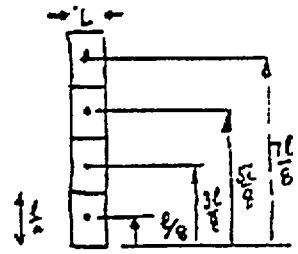

$$FD_1 = A_1 \frac{C_D}{2} \frac{\rho}{g} \left(\frac{\ell}{8}\right)^2 \frac{\omega_b^2}{4} \quad \text{where } A_1 = \frac{\ell}{4} \cdot L$$

$$= \frac{C_D}{2} \frac{\rho}{g} \frac{\ell L}{4} \frac{\ell^2}{64} \frac{\omega_b^2}{4}$$

∴ Drag energy on 1st element

$$DE_1 = FD_1 \, \delta_1 \quad \text{where } \delta_1 = r_1 \theta = \frac{\ell}{8} \theta$$

COMPUTATION/RECORD SHEET

PREPARED BY: W.H. WHITING	GENERAL ELECTRIC	PAGE NO. A3-3
CHECKED BY: R.L. [illegible]	NUCLEAR SYSTEMS TECHNOLOGY OPERATION	
DATE: 10/29/86	TITLE: DOCKWAY GUARD	

$$\therefore DE_1 = \frac{C_D}{2}\frac{\rho}{g}\frac{\ell L}{4}\left(\frac{\ell}{8}\right)^2\left(\frac{\omega_b}{2}\right)^2\left(\frac{\ell}{8}\right)\theta = \frac{C_D}{2}\frac{\rho}{g}\frac{(\ell L)}{16}\left(\frac{\ell}{8}\right)^3\omega_b^2\,\theta$$

$$\therefore \text{Total } DE = \frac{C_D}{2}\frac{\rho}{g}\frac{\ell L}{16}\omega_b^2\theta\left[\left(\frac{\ell}{8}\right)^3+\left(\frac{3\ell}{8}\right)^3+\left(\frac{5\ell}{8}\right)^3+\left(\frac{7\ell}{8}\right)^3\right] = \frac{C_D}{2}\frac{\rho}{g}\frac{\ell^4 L}{16}\omega_b^2\theta\left[\frac{1^3+3^3+5^3+7^3}{8^3}\right]$$

$\therefore$ if $C_D = 2$ and $L = 26''$

$$DE = .97(26)\ell^4\frac{\rho}{16g}\theta\,\omega_b^2 = \lambda\theta\,\omega_b^2 \qquad \text{where } \lambda = .97(26)\ell^4\frac{\rho}{16g}$$

The energy balance gives

$$\Delta PE = \Delta KE + DE$$

$$Wh = \tfrac{1}{2}I(\omega_1^2-\omega_2^2) + \lambda\theta(\omega_b+\omega_a)^2 \qquad \omega_a = 0,\quad h = \tfrac{\ell}{2}(1-\cos\theta)$$

$$\therefore W\tfrac{\ell}{2}(1-\cos\theta) = \tfrac{1}{2}I(\omega_b)^2 + \lambda\theta(\omega_b)^2 = \omega_b^2\left(\tfrac{1}{2}I+\lambda\theta\right)$$

$$\therefore \omega_b^2 = W\tfrac{\ell}{2}(1-\cos\theta)\Big/\left(\tfrac{1}{2}I+\lambda\theta\right)$$

Numerically:–

For $W = 14000$ lbs : $\ell = 156''$: a to b $\theta = 21°$ From a to b

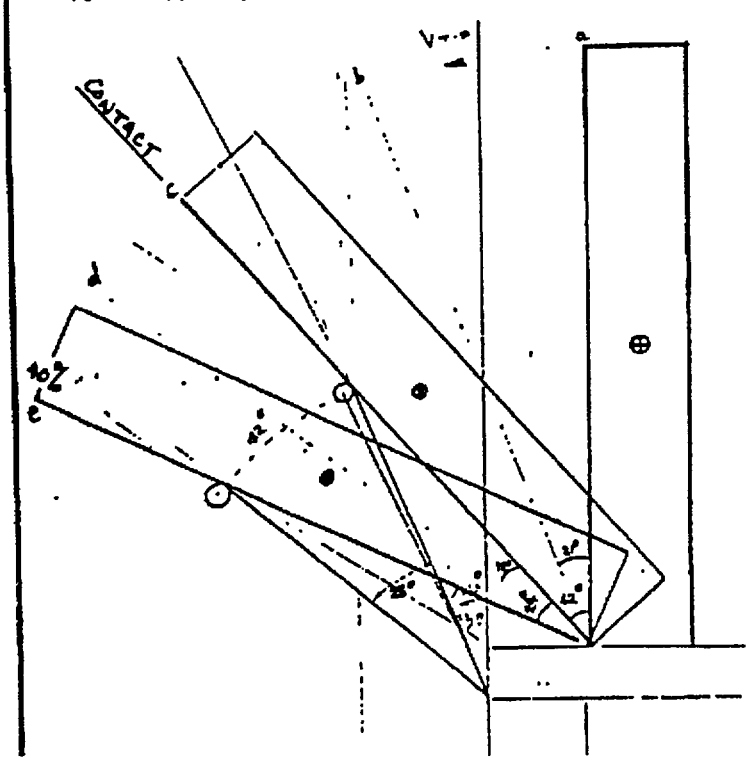

$$\Delta PE = 14000\left(\frac{156}{2}\right)(1-\cos 21) = 72530 \text{ lb in}$$

$$I = \frac{W}{g}k^2 = \frac{W}{g}\left(\frac{\ell^2}{3}+\frac{r^2}{4}\right) = \frac{14000}{386.4}\left(\frac{156^2}{3}+\frac{13^2}{4}\right) = .2954\,10^6 \ \frac{\text{lb in sec}^2}{}$$

$$\therefore \Delta KE = \tfrac{1}{2}(.2954)10^6\,\omega_b^2 = .1477\,10^6\,\omega_b^2$$

$$DE = .97(26)\frac{(156)^4}{1728}\frac{62.4}{16(386.4)}\left(\frac{21\pi}{180}\right)\omega_b^2 = .03197\,10^6\,\omega_b^2$$

$$\therefore 72530 = (.1477\,10^6 + .03197\,10^6)\,\omega_b^2$$

$$\therefore \omega_b = .6354 \text{ rads/sec}$$

$$V_{TIP} = 156(.6354) = 8.26 \text{ ft/sec}$$

COMPUTATION/RECORD SHEET

PREPARED BY: W.H WHITLING	GENERAL ELECTRIC	PAGE NO: A3-4
CHECKED BY: R.H Hill	NUCLEAR SYSTEMS TECHNOLOGY OPERATION	
DATE: 10/29/86	TITLE: DOORWAY GUARD	

From b to c $\theta \rightarrow 21^\circ$ to 42°

$$\Delta PE = W\frac{\ell}{2}(\cos 21 - \cos 42) = 1.092\ 10^6(\cos 21 - \cos 42) = 207956 \text{ lb in}$$

$$\Delta KE = .1477\ 10^6(\omega_c^2 - \omega_b^2) = .1477\ 10^6\ \omega_c^2 - 59631$$

$$DE = .03196\ 10^6(\omega_c + \omega_b)^2 = .03196\ 10^6(\omega_c^2 + 1.2708\,\omega_c + .4037)$$

$$\therefore 207956 = .1477\ 10^6\ \omega_c^2 - 59631 + .03196\ 10^6\ \omega_c^2 + .0406\ 10^6\ \omega_c + .0129\ 10^6$$

$$\therefore .1797\ \cancel{10^6}\ \omega_c^2 + .0406\ \cancel{10^6}\ \omega_c - .2547\ \cancel{10^6} = 0$$

$$\omega_c^2 + .2259\,\omega_c - 1.4174 = 0$$

$$\therefore \omega_c = 1.1011 \text{ rads/sec} \qquad \omega_c^2 = 1.2123$$

$$V_{TIP} = 13(1.1011) = 14.31 \text{ ft/sec.}$$

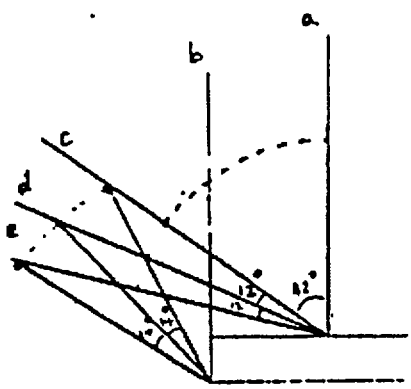

After impact $c \rightarrow d \rightarrow e$ the SS rod is stretching and energy is absorbed by the rod.

Ignoring the initial elastic energy (very small) the stretch energy

$SE = F_m \Delta$ → mean force × extension

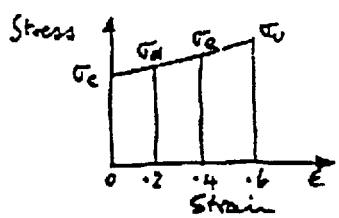

$\sigma_c = 35000$ psi

$\sigma_U = 85000$ psi ≐ 60%

$\therefore \sigma_e = 68{,}300$ psi ≐ 40%

$\sigma_d = 51650$ psi ≐ 20%

From c to d the stretch energy

$$SE = \left(\frac{\sigma_c + \sigma_d}{2}\right) A_B\,(.2)(105) \quad \text{where}$$

$$A_B = \text{bar area} = 2\left(\frac{\pi}{4}\right)\left(\frac{1}{4}\right)^2 = .09817 \text{ in}^2 \qquad L = 105''$$

$$\therefore SE = \frac{(35000 + 51650)}{2}(.09817)(.2)(105) = .0893\ 10^6 \text{ lb in}$$

From d to e the stretch energy

$$SE = \left(\frac{51650 + 68300}{2}\right)(.09817)(.2)(105) = .1237\ 10^6 \text{ lb in}$$

TOP OF DOCUMENT

COMPUTATION/RECORD SHEET

PREPARED BY: W.H WHITLINE	GENERAL ELECTRIC	PAGE NO: A3-5
CHECKED BY: [illegible]	NUCLEAR SYSTEMS TECHNOLOGY OPERATION	
DATE: 10/30/86	TITLE: DOORWAY GUARD	

Energy balance c → d

$$\Delta PE = 1.092\ 10^6(\cos 42 - \cos 54) = .1697\ 10^6 \text{ lb in}$$

$$\Delta KE = .1477\ 10^6(\omega_d^2 - \omega_c^2) = .1477\ 10^6\ \omega_d^2 - .1477\ 10^6\ 1.2.23$$

$$= .1477\ 10^6\ \omega_d^2 - .1791\ 10^6 \text{ lb in}$$

$$DE = .03196\ 10^6 \cdot \left(\frac{12}{21}\right)(\omega_d + \omega_c)^2$$

$$= .0183\ 10^6\ \omega_d^2 + .0403\ 10^6\ \omega_d + .0222\ 10^6 \text{ lb in}$$

$$SE = .0893\ 10^6 \text{ lb in}$$

$$\therefore .1697\ 10^6 = .1477\ 10^6\ \omega_d^2 - .1791\ 10^6 + .0183\ 10^6\ \omega_d^2 + .0403\ 10^6\ \omega_d + .0222\ 10^6 + .0893\ 10^6$$

$$\therefore \omega_d^2 + .2428\ \omega_d - 1.4295 = 0$$

$$\therefore \omega_d = 1.0804 \qquad \omega_d^2 = 1.1672$$

$V_{TIP} = 14.04$ ft/sec. ie deceleration is occurring but slowly.

From d → e

$$\Delta PE = 1.092\ 10^6(\cos 64 - \cos 66) = .1977\ 10^6 \text{ lb in}$$

$$\Delta KE = .1477\ 10^6(\omega_e^2 - 1.1672) = .1477\ 10^6\ \omega_e^2 - .1724\ 10^6 \text{ lb in}$$

$$DE = .0183\ 10^6(\omega_e + 1.0804)^2 = .0183\ 10^6\ \omega_e^2 + .0395\ 10^6\ \omega_e + .0214\ 10^6$$

$$SE = .1237\ 10^6 \text{ lb in}$$

$$\therefore .1977\ 10^6 = .1477\ 10^6\ \omega_e^2 - .1724\ 10^6 + .0183\ 10^6\ \omega_e^2 + .0395\ 10^6\ \omega_e + .0214\ 10^6 + .1237\ 10^6$$

$$\therefore \omega_e^2 + .238\ \omega_e - 1.3554 = 0$$

$$\therefore \omega_e = 1.051 \text{ rads/sec}$$

$V_{TIP} = 13.7$ ft/sec

This analysis was "computerised". Program name TILT. Listing is given on sheets 11 & 12. 4 cases were run

CASE A. Cask 78" from the doorway edge. θ = 60° W = [illegible]

CASE B. Cask 26" " " " " θ = 42° "

CASE C. Cask 0" " " " " θ = 26° "

TOP OF DOCUMENT

COMPUTATION/RECORD SHEET

PREPARED BY: [illegible]	GENERAL ELECTRIC	PAGE NO. A3-6
CHECKED BY: [illegible]	NUCLEAR SYSTEMS TECHNOLOGY OPERATION	
DATE: 10/30/86	TITLE: DOORWAY GUARD	

CASE A. CASK 78" FROM DOORWAY EDGE

$\theta_1 = 62°$ $\theta_2 = 14°$ $\theta_T = 76°$

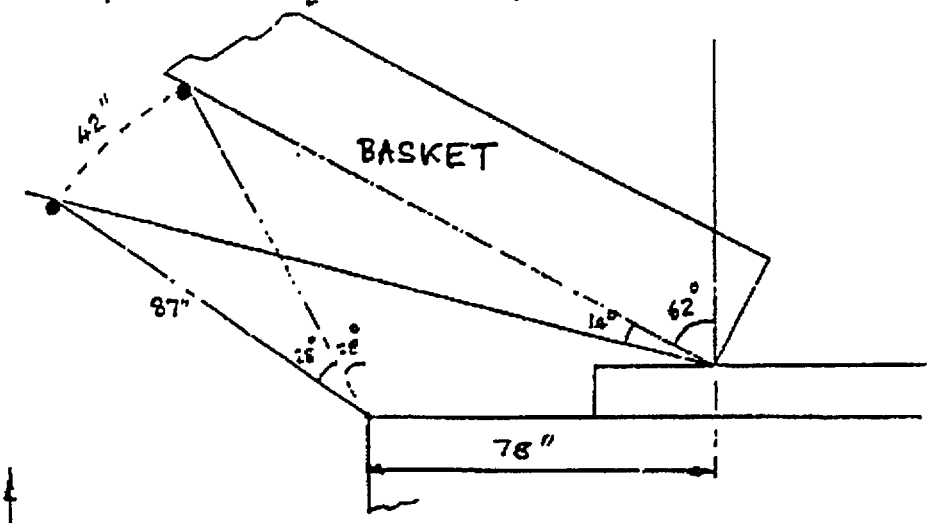

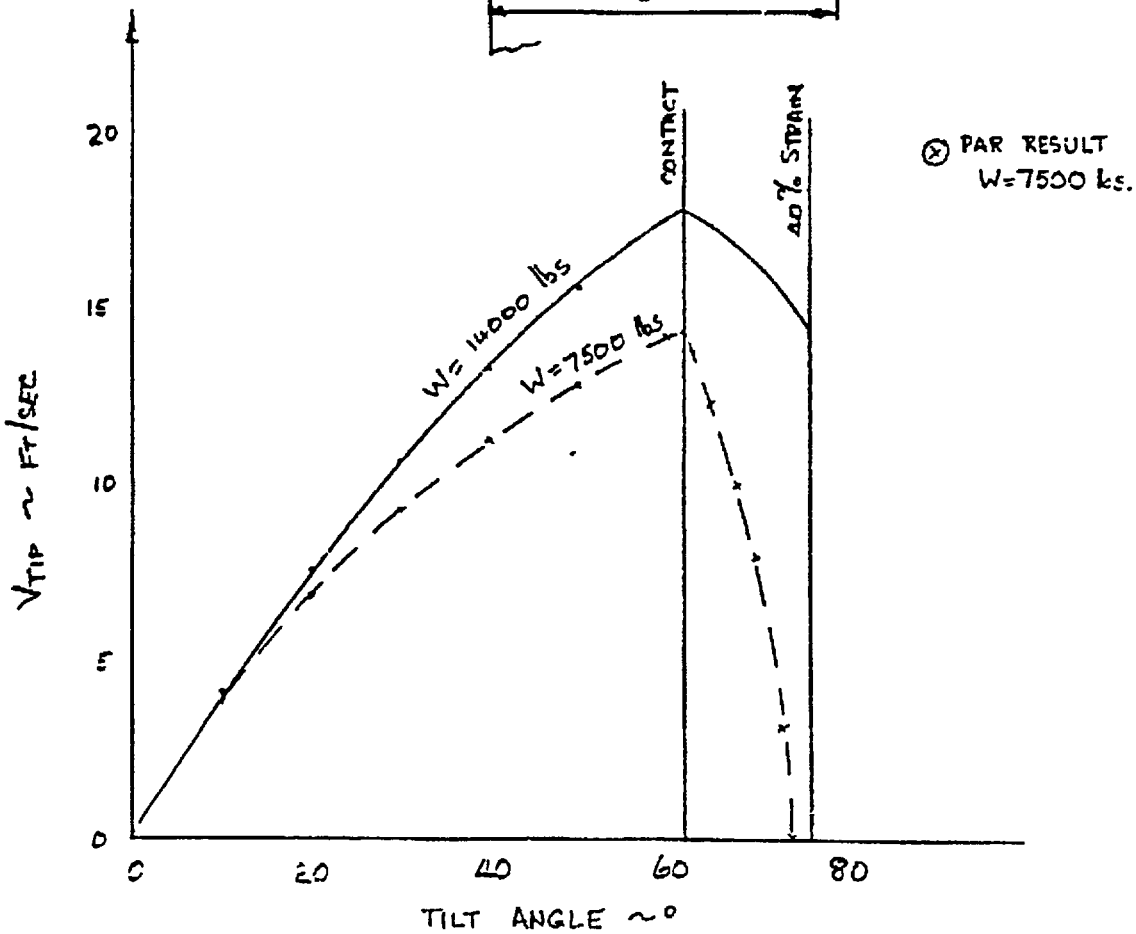

TOP OF DOCUMENT

COMPUTATION/RECORD SHEET

PREPARED BY: W H WHITEHOUSE	GENERAL ELECTRIC	PAGE NO: A3-7
CHECKED BY:	NUCLEAR SYSTEMS TECHNOLOGY OPERATION	
DATE: 10/30/86	TITLE: DOORWAY GUARD	

CASE B CASK 26" FROM EDGE OF DOORWAY

$\theta_1 = 42°$ $\theta_2 = 22\frac{1}{2}°$ $\theta_T = 64.5°$

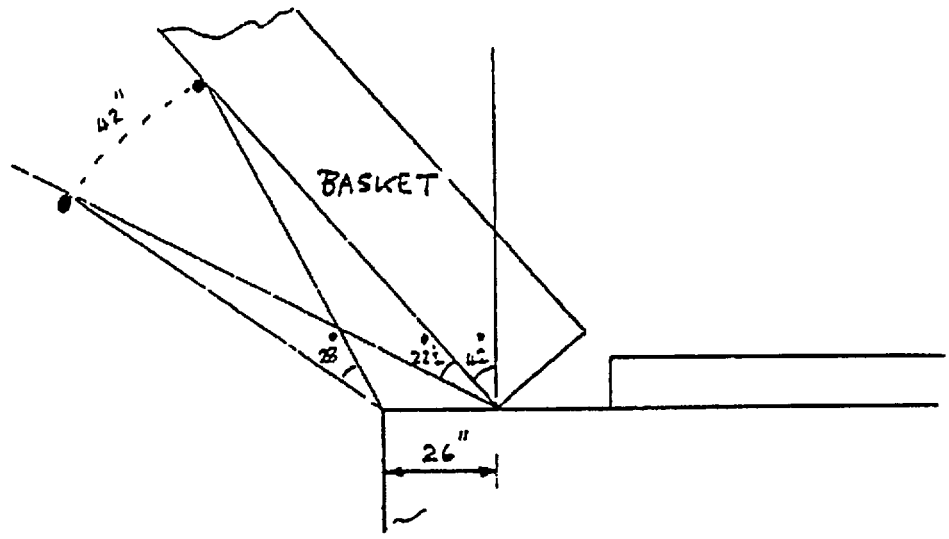

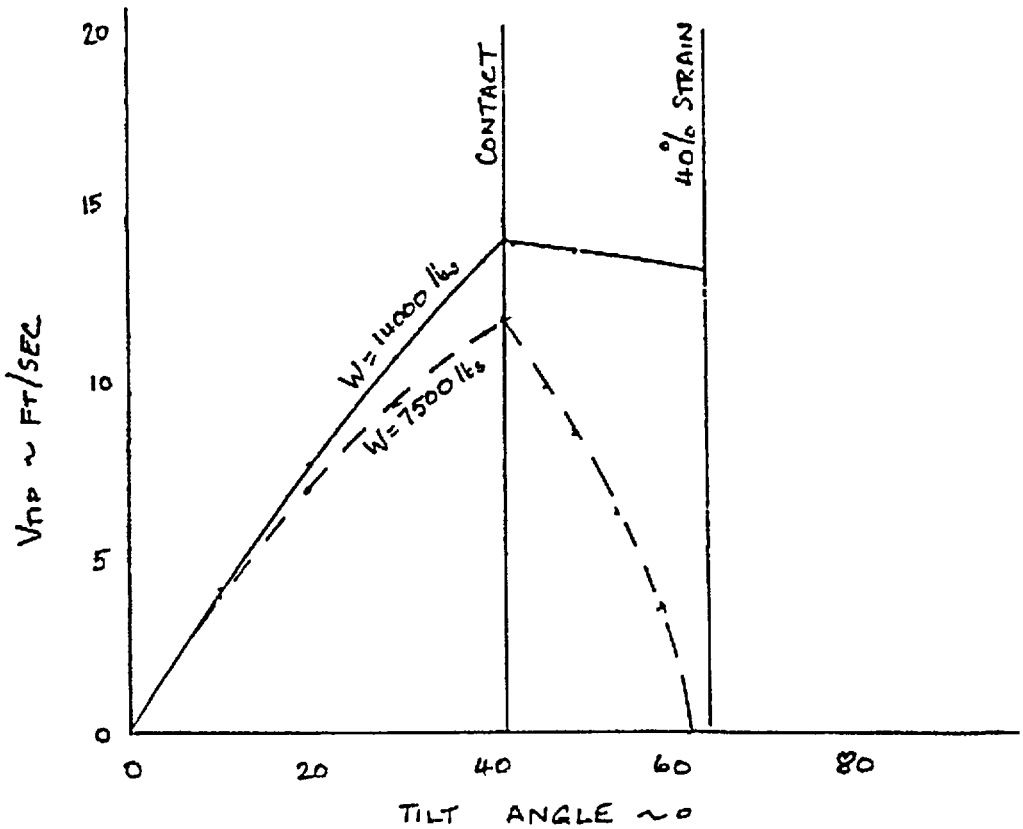

COMPUTATION/RECORD SHEET

PREPARED BY: W.H. WHITING	GENERAL ELECTRIC	PAGE NO A3-8
CHECKED BY: [illegible]	NUCLEAR SYSTEMS TECHNOLOGY OPERATION	
DATE: 10/30/86	TITLE: DOORWAY GUARD	

CASE C CASK 0" FROM EDGE OF DOORWAY

$\theta_1 = 28°$ $\theta_2 = 28°$ $\theta_T = 56°$

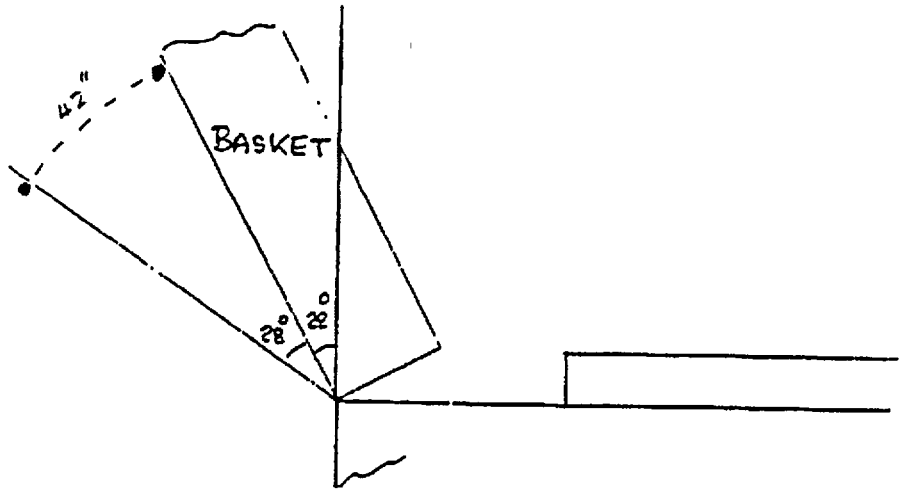

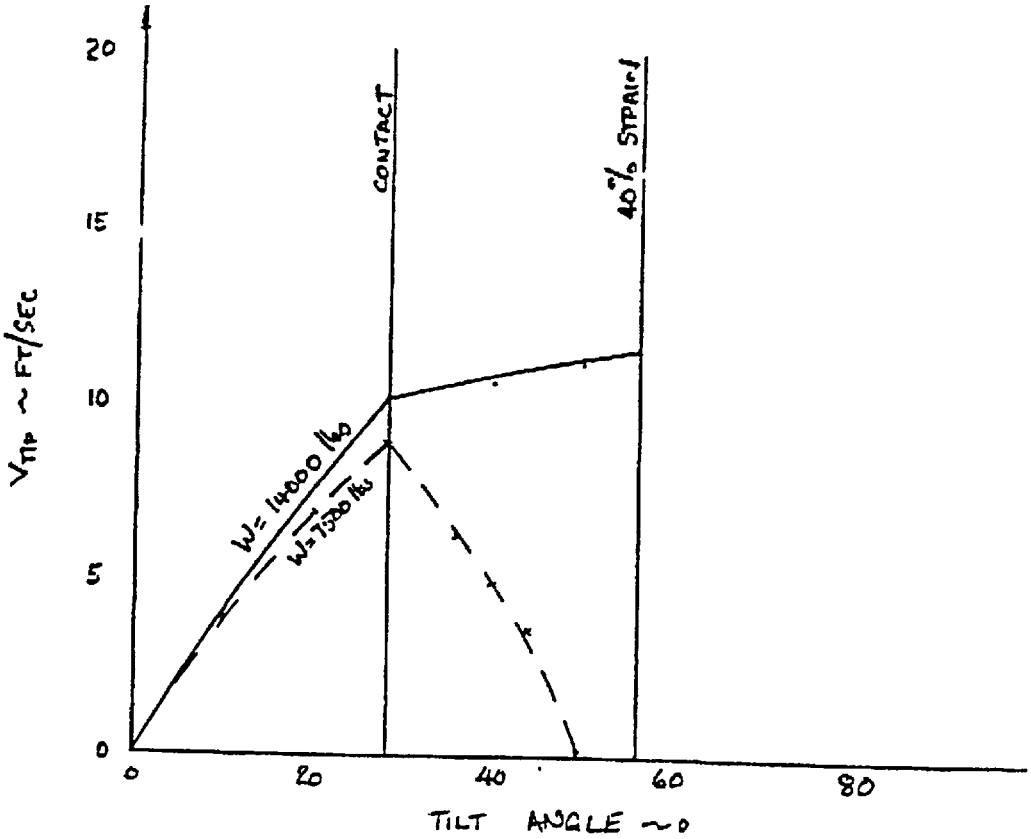

COMPUTATION/RECORD SHEET

PREPARED BY: W.H. WHITING	GENERAL ELECTRIC	PAGE NO. A3-9
CHECKED BY: R.L. H.	NUCLEAR SYSTEMS TECHNOLOGY OPERATION	
DATE: 10/30/86	TITLE: DOORWAY GUARD	

CASE D. CASK 26" FROM EDGE OF DOORWAY

$\theta_1 = 42^\circ \quad \theta_2 = 22\frac{1}{2}^\circ \quad \theta_T = 64\frac{1}{2}^\circ$

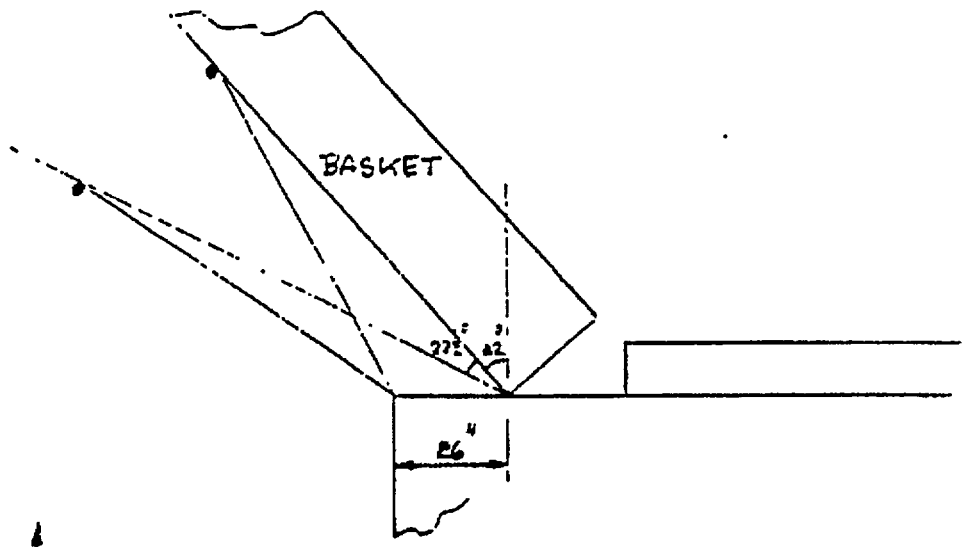

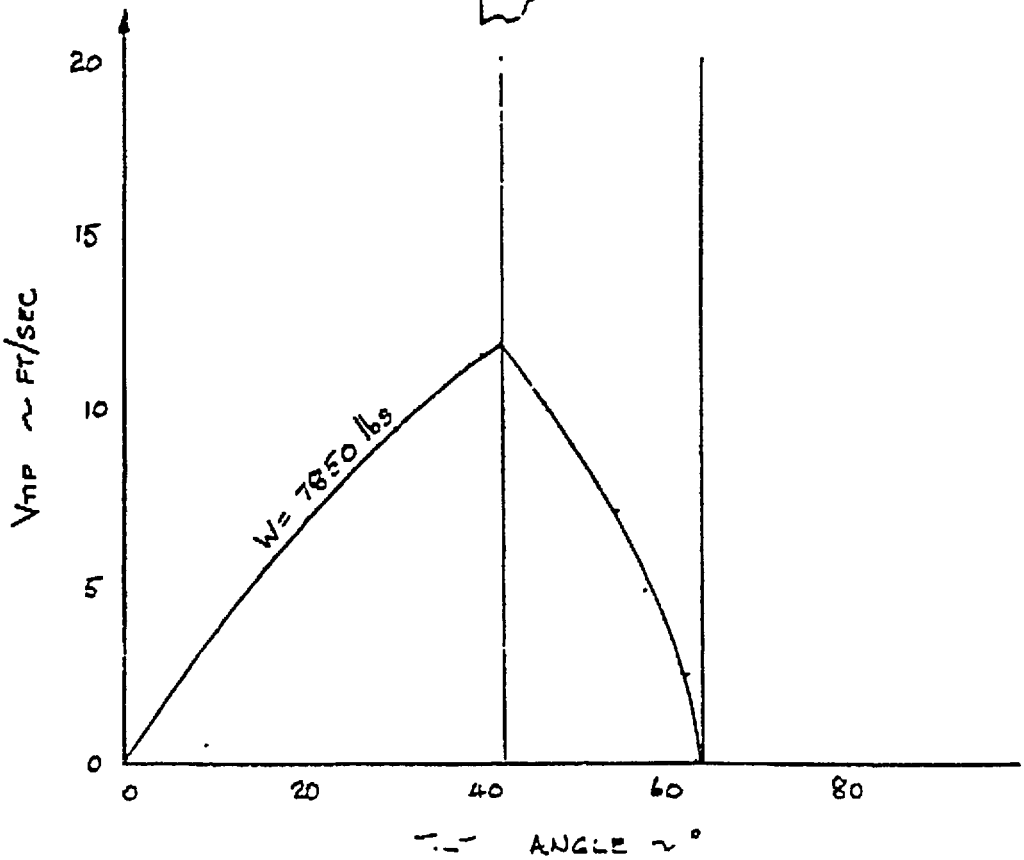

TOP OF DOCUMENT

COMPUTATION/RECORD SHEET

PREPARED BY: W.H. WHITING	GENERAL ELECTRIC	PAGE NO. A3-10
CHECKED BY: R.J. Hill	NUCLEAR SYSTEMS TECHNOLOGY OPERATION	
DATE: 10/31/86	TITLE: DOORWAY GUARD	

CONCLUSIONS:

1/ FOR THE ORIGINAL BASKET WT. OF 7500 lbs THE DOORWAY GUARD SYSTEM IS ADEQUATELY DESIGNED TO BRING THE BASKET TO REST FOR ALL THE DROP SCENARIOS LISTED.

2/ FOR A BASKET WT OF 14000 lbs THE SYSTEM IS TOTALLY INADEQUATE IN SATISFYING THE REQUIREMENT OF STOPPING THE BASKET WITHIN THE 40% STRAIN LIMIT.
IN FACT FRACTURE OF THE SS RODS IS LIKELY FOR ALL DROP SCENARIOS.

3/ IF ADMINISTRATION CONTROLS WERE IMPLEMENTED TO LIMIT THE TILT ANGLE TO 42° (CASES B&D) THE WT. LIMIT ON THE BASKET WOULD BE 7850 lbs

4/ THERE IS NO "EASY FIX" ON THE EXISTING DESIGN TO TAKE THE 14000 lb WT. SUCH AS INCREASING THE SS ROD AREA. THIS WOULD DILUTE THE EFFECT OF THE "WEAK LINK" AND FAILURE COULD OCURR ELSEWHERE IN THE MECHANISM.

RECOMMENDATION:

REDESIGN THE GATE CONCEPT IF 14000 lb BASKETS ARE TO BE USED.

TOP OF DOCUMENT

COMPUTATION/RECORD SHEET

PREPARED BY: R J HILL	GENERAL ELECTRIC	PAGE NO: A3-11
CHECKED BY: [illegible]	NUCLEAR SYSTEMS TECHNOLOGY OPERATION	
DATE: 10/30/86	TITLE: DOORWAY GUARD	

```
      PROGRAM TILT
C
C     PROGRAM TO COMPUTE THE NET KINETIC ENERGY OF A TILTING CASK
C     FOR THE MORRIS OPERATION
C
      G = 386.4
      RHO = 62.4 / 1728.
      THETAO = 0.0
      DELTA = 1.0
      ALPHA = 2.0
      WRITE (6,111)
 111  FORMAT(' INPUT THETA1, THETA2, THETA TOTAL AND WEIGHT: ')
      READ (6,*) OMEGA1, THET2, END, W
      DELTA2 = ALPHA * THET2 / 28.
      W2 = 0.0
      AL = 156.
      AI = W * 8154 / G
      W1 = 0.0
      CD = 2.0
      AROD = .0982
      AL2 = 85.
      E = 50000/.6
      SIG = 35000.
      ICONT = 1
      RADIAN = 3.141592654 / 180.
      CONDE = (.97*26.*AL**4 * RHO /(16. * G))*DELTA * RADIAN
      WRITE (6,1000)
      DO 100 I = DELTA, OMEGA1, DELTA
      THETA = I * RADIAN
      PE = W * AL * .5 *(COS(THETAO) - COS(THETA))
C
C     SOLVE FOR QUADRATIC
C
      B = (CONDE * 2. * W1)/(AI / 2. ) /
     + (1. + (CONDE /(AI/ 2.)))
      A = 1.0
      C = (((-PE + (CONDE * W1*W1)) /(AI/2.)) - (W1*W1))/
     + (1. + (CONDE /(AI/2.)))
D      WRITE (6,*) A, B, C
      W2 = (-B + (B**2 - 4. * A * C)**.5) / 2. * A
      AKE = (AI / 2.) * (W2*W2 - W1*W1)
      DE = (CONDE * ( W2 + W1)**2)
      TOTKE = TOTKE + AKE
      TOTDE = TOTDE + DE
      TOTPE = TOTPE + PE
      DEGREE = THETA/RADIAN
      IF(DEGREE.EQ.OMEGA1) GO TO 97
      IF (ICONT.NE.10) GO TO 98
      ICONT = 0
 97   WRITE (6, 1001) DEGREE, PE, AKE, DE, W2, W1
 98   ICONT = ICONT + 1
      W1 = W2
      THETAO = THETA
 100  CONTINUE
C
C
      CONDE = (.97*26.*AL**4 * RHO /(16. * G))*DELTA2 * RADIAN
      WRITE (6,1002)
      TOTSE = 0.0
      DO 200 I = OMEGA1 + ALPHA, 90, ALPHA
      THETA = THETAO + (DELTA2 * RADIAN)
```

THIS HAS A LIMITING VALUE OF 1.0

TOP OF DOCUMENT

COMPUTATION/RECORD SHEET

PREPARED BY: R E HILL	GENERAL ELECTRIC	PAGE NO: A3-12
CHECKED BY: M W [illegible]	NUCLEAR SYSTEMS TECHNOLOGY OPERATION	
DATE: 10/30/86	TITLE: DOORWAY GUARD	

```
      PE = W * AL * .5 *(COS(THETAO) - COS(THETA))
C
C     SOLVE FOR QUADRATIC
C
D      WRITE (6,*) SIG
      SE = (SIG + (E/(210))*AL2*ALPHA*RADIAN)*
     + AROD*AL2*ALPHA*RADIAN
      TOTSE = TOTSE + SE
      TOTSTR = TOTSTR + (AL2*ALPHA*RADIAN)
      SIG = SIG + (E/(105)*(AL2*ALPHA*RADIAN))
      B = (CONDE * 2. * W1)/(AI / 2. ) /
     + (1. + (CONDE /(AI/ 2.)))
      A = 1.0
      C = (((SE - PE + (CONDE * W1*W1)) /(AI/2.)) - (W1*W1))/
     + (1. + (CONDE /(AI/2.)))
      IF (C .GE. 0.0) C = 0.0
D      WRITE (6,*) A, B, C
      W2 = (-B + (B**2 - 4. * A * C)**.5) / 2. * A
      AKE = (AI / 2.) * (W2*W2 - W1*W1)
      DE = (CONDE * ( W2 + W1)**2)
      TOTKE = TOTKE + AKE
      TOTDE = TOTDE + DE
      TOTPE = TOTPE + PE
      DEGREE = THETA/RADIAN
      WRITE (6, 1003) DEGREE, PE, AKE, DE, SE, W2, TOTSTR
      W1 = W2
      THETAO = THETA
      IF(TOTSTR.GE.42) GO TO 210
      IF (DEGREE.GT.END) GO TO 215
 200  CONTINUE
 210  WRITE (6,1004)
      WRITE (6, 1003) DEGREE, TOTPE,TOTKE,TOTDE,TOTSE,W2,TOTSTR
 215  CONTINUE
 1000 FORMAT (' THETA          PE              KE              DE'
     + '          W2       W1'/)
 1001 FORMAT (1X, F5.2, 3E15.4, 2F8.5)
 1002 FORMAT (//' THETA        PE              KE              DE'
     + '          SE       W2      DELTA'/)
 1003 FORMAT (1X, F5.2, 4E13.4, 2F8.4)
 1004 FORMAT (' TOTALS')
      END
```

TOP OF DOCUMENT

COMPUTATION/RECORD SHEET

PREPARED BY: W.H. WHITLING	GENERAL ELECTRIC	PAGE NO: A4-1
CHECKED BY: R.H. Hall 12/1/86	NUCLEAR SYSTEMS TECHNOLOGY OPERATION	APPENDIX A4
DATE: 11/24/86	TITLE: CONSOLIDATED ROD CANISTER	

Material - 304 SS $\sigma_y = 35$ KSI

Limits for components in the direct load path are

Tensile $\sigma_t = \frac{1}{5}(35000) = 7000$ psi

Bending $\sigma_b = 1.5\,\sigma_t = 10{,}500$ psi

Shear $\sigma_v = \frac{2}{3}\sigma_t = 4{,}700$ psi

All dimensional details are from drawing GEN° 796E879 Sheets 1 & 2 NEBO 9/17/85 Rev A

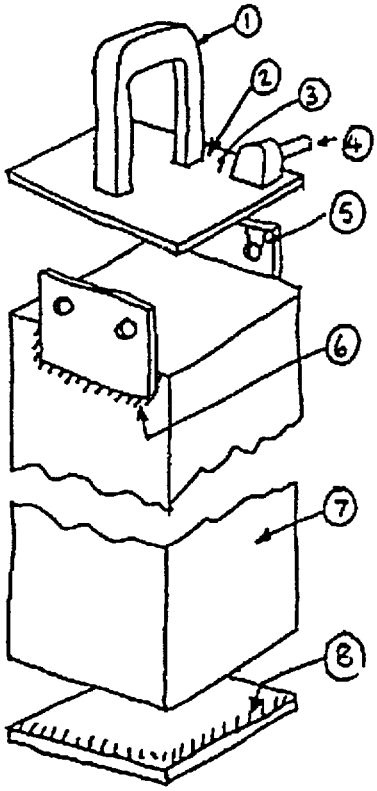

Total weight to be lifted (dry)

$W = 605 + 605 + 140 = 1350$ lbs.

(canister wt = 140 lbs)

① Lifting bar.

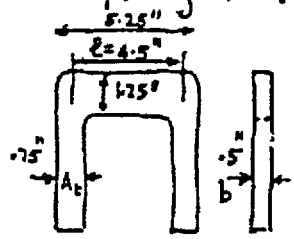

(a) Tensile area

$A_t = .75 \times .5 = .375\ in^2$

$\sigma_t = \frac{1350}{2(.375)} = 1800$ psi < 7000 psi ∴ OK!

(b) Bending

Assume the crossbeam bends due to a distributed load with its extremities pinned (this is conservative)

$Z = \frac{I}{y} = \frac{bt^3 2}{12\,t} = \frac{bt^2}{6} = \frac{.5(1.25)^2}{6} = .1302\ in^3$

$M = \frac{W\ell}{8} = \frac{1350\,(4.5)}{8} = 759.4$ lb in

∴ $\sigma_b = 759.4/.1302 = 5832$ psi $< 10{,}500$ psi ∴ OK!

(c) Shear

$A_s = 1.25 \times .5 \times 2 = 1.25\ in^2$

$\sigma_v = 1350/1.25 = 1080$ psi < 4700 psi ∴ OK!

TOP OF DOCUMENT

COMPUTATION/RECORD SHEET

PREPARED BY: W.H. WHITLING	GENERAL ELECTRIC	PAGE NO: A4 - 2
CHECKED BY: R A Hill 12/1/86	NUCLEAR SYSTEMS TECHNOLOGY OPERATION	
DATE: 11/25/86	TITLE:	

② Welds

$A_w = (.75 \times 2 + .5 \times 2)\, 2 \times \frac{1}{8} = 0.625 \text{ in}^2$

$\sigma_v = 1350/.625 = 2160 \text{ psi} < 4700 \text{ psi} \quad \therefore \text{OK!}$

③ Plate bending.

Assume a concentrated load and pinned ends

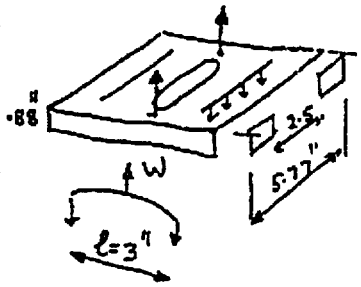

$M = \frac{Wl}{4} = 1350\left(\frac{3}{4}\right) = 1013 \text{ lb in}$

$Z = \frac{bt^2}{6} \qquad b = 5.77 - 2.5 = 3.27'' \qquad t = .88''$

$\therefore Z = \frac{3.27(.88)^2}{6} = .422 \text{ in}^3$

$\therefore \sigma_b = 1013/.422 = 2400 \text{ psi} < 10{,}700 \text{ psi} \quad \therefore \text{OK!}$

④ Shear on support pins $d = 1/2''$

$A_s = \frac{\pi}{4}\left(\frac{1}{2}\right)^2 4 = .7854 \text{ in}^2$

$\sigma_v = 1350/.7854 = 1719 \text{ psi}$

Assuming only 3 pins take the load

$A_s = .589 \text{ in}^2$

$\sigma_v = 1350/.589 = 2292 \text{ psi} < 4700 \text{ psi} \quad \therefore \text{OK!}$

⑤ Shear tearout on support plate. ($\frac{1}{4}''$ thick)

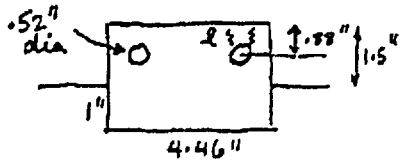

$l = .88 - .52/2 = .62''$ (minimum)

$A_s = 8(.62)\frac{1}{4} = 1.24 \text{ in}^2$

For 3 holes only $A_s = .93 \text{ in}^2$ (conservative)

$\sigma_v = 1350/.93 = 1452 \text{ psi} < 4700 \text{ psi} \quad \therefore \text{OK!}$

TOP OF DOCUMENT

COMPUTATION/RECORD SHEET

PREPARED BY: W.H. WHITLING	GENERAL ELECTRIC	PAGE NO: A4-3
CHECKED BY: RDHill 12/1/86	NUCLEAR SYSTEMS TECHNOLOGY OPERATION	
DATE: 11/25/86	TITLE:	

(6) Plate welds

Area $= A_W = (1+1+0.46)\,2\,(.060)\,.707 = .548\ in^2$

$\sigma_V = \frac{1350}{.548} = 2463$ psi < 4700 psi ∴ OK!

(7) Tension in canister. (16g)

$A = 4 \times 6 \times .0598 = 1.435\ in^2$

$\sigma_t = \frac{1350}{1.435} = 941$ psi < 7000 psi ∴ OK!

(8) Bottom weld ($\frac{1}{2}$" plate)

$A_W = 4 \times 6 \times .060 \times .707 = 1.018\ in^2$

$\sigma_V = 1350/1.018 = 1326$ psi < 4700 psi ∴ OK!

(Bending on ½" plate for distributed loading is small)

SUMMARY

LOCATION	STRESS PSI	LIMIT PSI	MARGIN OF SAFETY
1(a)	1800	7000	2.89
1(b)	5832	10500	.80
1(c)	1080	4700	3.35
2	2160	4700	1.18
3	2400	10500	3.38
4	2292	4700	1.05
5	1452	4700	2.24
6	2463	4700	.91
7	941	7000	6.44
8	1326	4700	2.54

Margin of safety $= \left(\frac{\text{Limit}}{\text{Stress}} - 1\right)$

The lowest margin is .8 — bending of lifting bar.

To increase this to the limit would require a wt of $1350 \frac{10500}{5832} = 2431$ lbs.

If the canister were empty of fuel and full of water the extra wt would be $\left(\frac{6 \times 6 \times 180}{1728}\right) 62.4 = 234$ lbs $\ll 2431$ lbs

∴ any residual water in the canister during the lift will not effect the conclusion.

CONCLUSION

ALL MARGINS ARE POSITIVE FOR A WET OR DRY LIFT.