NMC
Committed to Nuclear Excellence

Point Beach Nuclear Plant
Operated by Nuclear Management Company, LLC

NRC 2003-0028

10 CFR 50.67
10 CFR 50.90

March 27, 2003

U.S. Nuclear Regulatory Commission
ATTN: Document Control Desk
Washington, D.C. 20555

POINT BEACH NUCLEAR PLANT
DOCKETS 50-266 AND 50-301
LICENSE AMENDMENT REQUEST 234, SELECTIVE SCOPE IMPLEMENTATION OF ALTERNATE SOURCE TERM FOR FUEL HANDLING ACCIDENT

By letter dated February 28, 2002, Nuclear Management Company, LLC (NMC) submitted a License Amendment Request for review and approval of a selective scope application of the Alternative Source Term methodology to the Point Beach Nuclear Plant (PBNP) Control Room Habitability and offsite radiological doses. Additionally, NMC requested an amendment to the Technical Specifications (TS) for PBNP.

During conference calls between NMC representatives and NRC staff on September 26, 2002, November 18, 2002, and January 8, 2003, NRC staff questioned certain aspects of the submittal. As discussed during those conference calls, NMC stated that the February 28, 2002 submittal will be restructured into two separate submittals. The first submittal requests review and approval of a selective scope application of AST for only the Fuel Handling Accident (FHA) and corresponding changes to TS 3.9.3, "Containment Penetrations." A second submittal will address the staff's remaining questions and request approval of the remaining dose analyses for PBNP.

By letter dated January 24, 2003, NMC requested that the February 28, 2002 submittal be withdrawn in order to facilitate restructuring of the proposed amendment. In that letter, NMC committed to submitting radiological dose analyses for the control room and license amendment proposals, as discussed above. Withdrawal of the February 28, 2002 submittal was acknowledged by the NRC in a letter dated February 24, 2003.

NMC is providing the first portion, the selective scope application of AST for the FHA, in the attached submittal. In addition, this submittal contains the responses to the staff's questions on the previously proposed submittal germane to the FHA. The proposed change to TS 3.9.3, "Containment Penetrations," amends the applicability of this specification. Specifically, current TS requirements regarding closure of the containment equipment hatch, the personnel airlock, and containment penetrations would only apply during movement of recently irradiated fuel assemblies. Recently irradiated fuel is to be defined as fuel that has occupied part of a critical reactor core within the previous 65 hours. The applicability of this specification during CORE ALTERATIONS is to be deleted.

A001

6590 Nuclear Road • Two Rivers, Wisconsin 54241
Telephone 920 755 2321

This requested license amendment is similar to the Industry/TSTF Standard Technical Specification Change Traveler 51, Revision 2. As described therein, removal of the phrase "during core alterations" is generically endorsed because the only accident postulated to occur during core alterations that could result in a significant radioactive release is the fuel handling accident. Similar changes have previously been granted for Catawba Nuclear Station Units 1 and 2 on April 23, 2002 (Accession Number ML021140431).

The revised analysis, which supports the TS change, incorporates updated atmospheric dispersion factors for the Control Room (CR) intake pathway and an increased unfiltered inleakage value of 500 cfm. This value is 50 times greater than that assumed in the current licensing basis analysis for Control Room Habitability (CRH). In addition, the proposed unfiltered inleakage value could be increased by a factor of three while maintaining the dose to the operator within the regulatory limit.

Attachment I provides a description, justification, and No Significant Hazards Consideration for the proposed change, along with a summary of the regulatory commitments made in this submittal. Attachment II provides the Safety Analysis. Attachment III provides the existing TS page marked up to show the proposed change. Attachment IV provides the existing TS Bases pages marked up to show the proposed change. Attachment V provides revised (clean) TS and Bases pages. Attachment VI provides the proposed administrative containment closure controls. Attachment VII provides the requested response to the staff's questions germane to the FHA from the September 26 and November 18, 2002 conference calls. The staff's questions from these conference calls that do not pertain to the FHA will be incorporated in a subsequent submittal.

NMC requests approval of the proposed License Amendment by August 2003, with the amendment being implemented within 90 days. The approval date was administratively selected to allow for NRC review and approval with implementation prior to the Unit 2 fall refueling outage. However, the plant does not require this amendment to allow continued safe full power operation.

In accordance with 10 CFR 50.91, a copy of this application with attachments is being provided to the designated Wisconsin Official.

I declare under penalty of perjury that the foregoing is true and accurate. Executed on March 27, 2003.

A. J. Cayia
Site Vice President

LAS/kmd

Attachments: I - Description and Assessment
II - Safety Analysis
III - Proposed Technical Specification Changes
IV - Proposed Technical Specification Bases Changes
V - Revised Technical Specification Pages
VI - Administrative Containment Building Closure Controls During Fuel Movement
VII - Response to Request for Additional Information

Enclosure: CD-ROM, ARCON96 Meteorological Data File

cc (with enclosure):
Project Manager, PBNP, NRR, USNRC

cc (w/o enclosure):
Regional Administrator, Region III, USNRC
NRC Resident Inspector - PBNP
PSCW

ATTACHMENT I

DESCRIPTION AND ASSESSMENT OF CHANGES

FOR

LICENSE AMENDMENT REQUEST 234

SELECTIVE SCOPE IMPLEMENTATION OF ALTERNATE SOURCE TERM FOR

POINT BEACH NUCLEAR PLANT, UNITS 1 AND 2

FUEL HANDLING ACCIDENT ANALYSIS

1.0 INTRODUCTION

As a holder of an operating license issued prior to January 10, 1997, and in accordance with 10 CFR 50.67, the Point Beach Nuclear Plant (PBNP) is voluntarily requesting to replace the accident source term used in a selection of its design basis offsite and control room dose analyses by the selective implementation of Alternative Source Term (AST).

NMC is providing the selective scope application of AST for the Fuel Handling Accident (FHA) in the attached submittal. In addition, it contains responses to the staff's questions germane to the FHA previously communicated to NMC during various teleconferences during the past 12 months. The revised FHA analysis confirms that sufficient radioactive decay has occurred after 65 hours such that certain existing controls are no longer necessary to ensure that the dose consequences remain within the regulatory limits. However, in order to maintain defense in depth, administrative controls will be in place during the movement of non-recently irradiated fuel. These controls are described in Attachment VI. If movement of irradiated fuel assemblies were to occur prior to the 65 hour decay period, the currently existing TS control would apply.

This license amendment request employs many of the concepts previously reviewed and approved in Industry/TSTF Standard Technical Specification Change Traveler 51, Revision 2. (Reference 6) As specified in a reviewer's note in TSTF 51, Revision 2, NMC will employ the following modified guidelines of NUMARC 93-01, Revision 3, Section 11.3.6, "Assessment Methods of Shutdown Conditions," Subheading "Containment – Primary (PWR)." (Reference 7) Specifically, the guidelines that will be adopted are:

> During movement of irradiated fuel assemblies, ventilation system and radiation monitor availability (as defined in NUMARC 91-06) should be assessed, with respect to filtration and monitoring of releases from the fuel. Following shutdown, radioactivity in the RCS decays fairly rapidly. The goal of maintaining ventilation system and radiation monitor availability is to reduce doses even further below that provided by the natural decay, and to avoid unmonitored releases.
>
> A single normal or contingency method to promptly close primary containment penetrations should be developed. Such prompt methods need not completely block the penetration or be capable of resisting pressure. The purpose is to enable ventilation systems to draw the release from a postulated fuel handling accident in the proper direction such that it can be treated and monitored.

2.0 BACKGROUND

The AST analysis for the design basis accident presented in Attachment II generally follows the guidance in Regulatory Guide 1.183, "Alternative Radiological Source Terms for Evaluation Design Basis Accidents at Nuclear Power Reactors," Draft Regulatory Guide DG-1111, "Atmospheric Relative Concentration for Control Room Radiological Habitability Assessment at Nuclear Power Plants," and Standard Review Plan (SRP) Section 15.0.1, "Radiological Consequence Analyses Using Alternative Source Term." (References 1, 2, and 3, respectively)

The analysis assumes an uprated core power level of 1683 MWt (compared to the current licensed power of 1540 MWt), nominal 18 month fuel cycle, and the use of Westinghouse 422V+ fuel. No actual increase in licensed power level is being sought by this submittal. The analysis is performed at a higher power level than allowed by the license in order to bound the consequence of a potential uprate.

3.0 DESCRIPTION OF CHANGE

Summary of Proposed Technical Specifications Changes

1. TS 3.9.3, "Containment Penetrations"

   a. The Applicability statement is being revised to "During movement of recently irradiated fuel assemblies within containment." Reference to "Core Alterations" is removed and "recently irradiated" is added.
   b. Actions for Condition A of this TS are being modified to eliminate the requirement to suspend core alterations and to only require suspension of movement of recently irradiated fuel assemblies within containment if one or more containment penetrations are not in the required status.

Summary of Proposed Technical Specification Bases Changes

1. Bases to TS 3.7.10, "Fuel Storage Pool Water Level"

   a. Various clarifications are made to the Applicability section to reflect the revised analysis for the FHA.

2. Bases to TS 3.9.3, "Containment Penetrations"

   a. Reference to CORE ALTERATIONS is deleted and "recently" is inserted before "irradiated" fuel. An explanation of "recently irradiated fuel" is added.
   b. Various clarifications are made throughout to reflect the revised analysis for the FHA.

3. Bases to TS 3.9.6, "Refueling Cavity Water Level"

   a. The decontamination factor for iodine credited in the fuel handling accident analysis is 200, as allowed by RG 1.183. The Applicable Safety Analyses section was revised to support that change.
   b. Minor editorial and grammatical changes were made to the Background, LCO, and Reference sections.

Additional Changes

The administrative closure control considerations provided in NUMARC 93-01 (Reference 7) will be added to the Technical Requirements Manual.

4.0 ANALYSIS

Each containment at Point Beach Nuclear Plant is equipped with two personnel air locks, an equipment hatch, and a Containment Purge Supply and Exhaust system (VNPSE). Technical Specification 3.9.3 requires that during core alterations or movement of irradiated fuel assemblies within containment, the associated equipment hatch be closed and secured, and at least one of the two doors in each personnel air lock be capable of being closed. The current licensing basis FHA analysis assumes the bounding accident occurs in the Spent Fuel Pool. However, the revised bounding design basis accident analysis is the FHA in containment. This revised analysis, submitted herein, is performed assuming a release from the Unit 2 Purge Stack assuming no filtration or isolation.

CORE ALTERATIONS is defined in TS 1.1 as the movement of fuel, sources, or reactivity control components within the reactor vessel with the vessel head removed and fuel in the vessel. During core alterations, only a postulated fuel handling accident results in cladding damage and a potential radiological release. Consequently, it is proposed that the phrase "during core alterations" be deleted from TS 3.9.3 and replaced with "during movement of recently irradiated fuel."

A revised analysis for the FHA has been performed in support of this TS amendment. The analysis is based on the guidance provided Regulatory Guide 1.183, the guideline for use of the AST methodology. The specifics of the analysis are contained in Attachment II; however, a summary is provided below.

The revised FHA analysis assumes that an assembly is dropped in the Unit 2 containment while refueling. All fuel rods in the assembly are assumed to sustain damage such that 100% of the noble gas gap activity is released as well as a portion of the halogens and alkaline metals. The activity is released to the environment via the Unit 2 Purge, which is the bounding release path. The only mitigating factor credited in the analysis is the pool scrubbing of the halogens based on the guidance of RG 1.183, Appendix B. No credit is taken for containment penetration closure.

The proposed FHA analysis assumes an unfiltered inleakage value of 500 cfm into the control room. This value does not include the ventilation filter break through flow. Current licensing basis analysis for control room habitability assumes an unfiltered inleakage of 10 cfm based on the guidance of the Murphy-Campe methodology for positive pressurize control rooms. (Reference 5) This early methodology provided a value of 10 cfm unfiltered inleakage for pressurized control rooms in order to account for ingress and egress. Sensitivity analyses performed under the proposed design basis FHA conditions have demonstrated that the unfiltered inleakage can be increased to approximately 1675 cfm before exceeding the dose limit of 5 rem TEDE. This inleakage value is greater than a factor of 3 increase of the proposed value, and two orders of magnitude larger than the current licensing basis assumption for CRH. A considerable margin of safety is demonstrated for the FHA analysis via selective scope implementation of AST.

Point Beach recently completed significant improvements to the integrity of the envelope in order to minimize the potential for unfiltered inleakage to reduce overall operator dose. These upgrades included replacement of door seals, hardcasting of ductwork seams, replacement of various dampers with bubble-tight dampers, as well as, the addition of new bubble-tight and balancing dampers. The current emergency mode of operation of the control room HVAC system with the incorporation of the modifications is able to maintain a positive pressure greater than 1/8 in. w.g. between all adjacent spaces as did the original design; however, this can be attained with a lower amount of outside air intake.

Although the analysis assumption for unfiltered inleakage of 500 cfm has not been verified through testing, a qualitative assessment of the upgraded control room envelope provides a high degree of confidence that actual inleakage does not exceed this value. This is based in part on integrity testing that verified improvements in the leak tightness of the control room ventilation boundary following the upgrades. In the event that actual inleakage were greater than the 500 cfm assumed in the analysis, operators have access to potassium iodide (KI) for use as a prophylaxis measure to reduce operator dose within regulatory limits. Although not credited in the proposed fuel handling accident dose analysis, Emergency Plan procedures are in place for distribution of KI in the event it were needed to mitigate operator dose during a radiological emergency.

To verify the inleakage assumption, Point Beach will perform testing to quantify actual control room unfiltered inleakage after the resolution of the generic issues regarding such testing has been published by the NRC. In the interim, the integrity testing that has been performed on the control room ventilation system, along with the compensatory measures afforded by the use of KI, provide adequate assurance that operator doses will be maintained within limits.

5.0 REGULATORY ANALYSIS

5.1 No Significant Hazards Determination

In accordance with the requirements of 10 CFR 50.90, Nuclear Management Company (licensee) hereby requests amendments to facility operating licenses DPR-24 and DPR-27, for Point Beach Nuclear Plant, Units 1 and 2, respectively. The proposed license amendment will revise the applicability of Technical Specification (TS) 3.9.3, "Containment Penetrations," to incorporate changes resulting from the use of selective implementation of an Alternate Source Term (AST).

NMC has evaluated the proposed amendments in accordance with 10 CFR 50.91 against the standards in 10 CFR 50.92 and has determined that the operation of the Point Beach Nuclear Plant in accordance with the proposed amendments present no significant hazards. Our evaluation against each of the criteria in 10 CFR 50.92 follows.

1. **Operation of the Point Beach Nuclear Plant in accordance with the proposed amendments does not result in a significant increase in the probability or consequences of any accident previously evaluated.**

   Selective implementation of the Alternative Source Term (AST) and those plant systems affected by implementing the proposed changes to the TS are not accident initiators and cannot increase the probability of an accident. The AST does not adversely affect the design or operation of the facility in a manner that would create an increase in the probability of an accident. Rather, the AST is a methodology used to evaluate the dose consequences of a postulated accident.

   The fuel handling accident analysis has demonstrated that the dose consequences of a postulated fuel handling accident remain within the limits provided sufficient decay has occurred prior to the movement of irradiated fuel without taking credit for certain mitigation features such as ventilation filter systems and containment closure. Irradiated fuel that has not undergone the required decay period of 65 hours is defined as recently irradiated fuel and the currently approved TS requirements are applicable when this recently irradiated fuel is being handled.

This amendment does not alter the methodology or equipment used directly in fuel handling operations. Neither ventilation filter system (i.e., the containment purge or drumming area vent stack) is used to actually handle fuel. Neither of these systems is an accident initiator. Similarly, neither the equipment hatch, personnel air locks, any other containment penetrations, nor any component thereof is an accident initiator. No other accident initiator is affected by the proposed changes.

The TEDE doses from the analysis supporting this amendment request have been compared to equivalent TEDE doses estimated with the guidelines of RG 1.183 Footnote 7. The new values are shown to be comparable to the results of the previous analysis.

Based on the aforementioned reasons, the proposed amendment does not involve a significant increase in the probability or consequences of a FHA as previously analyzed.

2. **Operation of the Point Beach Nuclear Plant in accordance with the proposed amendments does not result in a new or different kind of accident from any accident previously evaluated.**

The evaluation of the effects of the proposed changes indicates that all design standards and applicable safety criteria limits are met. The proposed amendment would increase the time during which the equipment hatch and personnel air locks could be open during core alterations and movement of irradiated fuel. The proposed amendment does not involve changes in the operations of these containment penetrations. Having these penetrations open does not create the possibility of a new accident.

Therefore, operation of the Point Beach Nuclear Plant in accordance with the proposed amendments will not create the possibility of a new or different type of accident from any accident previously evaluated.

3. **Operation of the Point Beach Nuclear Plant in accordance with the proposed amendments does not result in a significant reduction in a margin of safety.**

The assumptions and input used in the analysis are conservative as noted below. The design basis FHA has been defined to identify conservative conditions. The source term and radioactivity releases have been calculated pursuant to RG 1.183, Appendix B and with conservative assumptions concerning prior reactor operations. The control room atmospheric dispersion factor has been calculated with conservative assumptions associated with the release. The conservative assumptions and input noted above ensure that the radiation doses cited in the amendment request are the upper bound to radiological consequences of a FHA either in containment or in the spent fuel pool. The analysis shows that there is a significant margin between the TEDE radiation doses calculated for the postulated FHA using the AST and acceptance limits of 10 CFR 50.67 and RG 1.183. The proposed changes will not degrade the plant protective boundaries, will not cause a release of fission products to the public, and will not degrade the performance of any Structures, Systems, and Components important to safety. Therefore, there is no significant reduction in the margin of safety as a result of the proposed changes.

Conclusion

Operation of the Point Beach Nuclear Plant in accordance with the proposed amendments will not result in a significant increase in the probability or consequences of any accident previously analyzed; will not result in a new or different kind of accident from any accident previously analyzed; and, does not result in a significant reduction in any margin of safety. Therefore, operation of PBNP in accordance with the proposed amendments does not result in a significant hazards consideration.

5.2 List of Regulatory Commitments

The following is a list of regulatory commitments made by NMC for PBNP in this submittal. Any other statements in this submittal are provided for information purposes and are not considered to be regulatory commitments.

1. NMC will perform testing at PBNP to quantify actual control room unfiltered inleakage after the resolution of the generic issues regarding such testing has been published by the NRC.

2. NMC will implement the administrative controls at PBNP of Attachment VI of this submittal, prior to implementation of the proposed amendment, to be applicable during the movement of non-recently irradiated fuel. The requirements for these controls will be maintained in the Technical Requirements Manual.

3. NMC will supplement this amendment request to address the remaining five revised dose analyses for PBNP discussed in the original submittal dated February 28, 2002.

6.0 ENVIRONMENTAL EVALUATION

We have determined that implementation of this amendment does not involve a significant hazards consideration, authorize a significant change in the types or total amounts of effluent release, or result in any significant increase in individual or cumulative occupational radiation exposure. Therefore, we conclude that the proposed amendments meet the categorical exclusion requirements of 10 CFR 51.22(c)(9) and that an environmental impact appraisal need not be prepared.

7.0 REFERENCES

1 USNRC Regulatory Guide 1.183, "Alternative Radiological Source Terms for Evaluating Design Basis Accidents At Nuclear Power Reactors," July 2000.

2 USNRC Draft Regulatory Guide DG-1111, "Atmospheric Relative Concentrations for Control Room radiological Habitability Assessments at Nuclear Power Plants," December 2001.

3 USNRC NUREG-0800, Standard Review Plan SRP-15.0.1, "Radiological Consequence Analyses Using Alternative Source Terms," July 2000.

4 NRC Letter 2002-0019, Licensing Amendment Request 224, "Control Room Habitability," February 8, 2002.

5 K.G. Murphy and Dr. K. M. Campe, "Nuclear Power Plant Control Room Ventilation system Design for Meeting General Criterion 19," 13th AEC Air cleaning Conference, August 1974.

6 Industry/TSTF Standard Technical Specification Change Traveler, TSTF-51 Revision 2, "Revise Containment Requirements During Handling Irradiated Fuel and Core Alterations," 10/1/1999.

7 NEI NUMARC 93-01, Revision 3, "Industry Guideline for Monitoring the Effectiveness of Maintenance at Nuclear Power Plants," July 2000.

ATTACHMENT II

SAFETY ANALYSIS

FOR

LICENSE AMENDMENT REQUEST 234

SELECTIVE SCOPE IMPLEMENTATION OF ALTERNATE SOURCE TERM FOR

POINT BEACH NUCLEAR PLANT, UNITS 1 AND 2

FUEL HANDLING ACCIDENT ANALYSIS

TABLE OF CONTENTS

1.0 Introduction 3
1.1 Evaluation Overview and Objective 3
1.2 Changes to the PBNP Design and Licensing Basis 3
1.3 Deviations from the Regulatory Guideline 3
2.0 Fuel Handling Accident Scenario 4
2.1 Introduction 4
2.2 Current Licensing Basis Description 4
2.3 Proposed Licensing Basis Description 5
2.4 Results and Conclusions 8
3.0 Dose Calculation 10
3.1 Input Parameters and Assumptions 10
3.2 Dose Calculation Models 11
4.0 Radiation Source Terms 18
4.1 Core Inventory 18
5.0 Accident Atmospheric Dispersion Factors (χ/Q) 20
5.1 Control Room Atmospheric Dispersion Factors 20
5.2 Offsite Atmospheric Dispersion Factors 21
6.0 Control Room Envelope 25
6.1 Control Room Licensing Basis 25
6.2

Control Room Design and Ventilation System (VNCR) Description 26
7.0 Conclusion 31
8.0 References for Attachment II 32

1.0 Introduction

1.1 Evaluation Overview and Objective

The objective of this evaluation is to document the PBNP selective implementation of the Alternative Source Terms (AST) for the Fuel Handling Accident (FHA) offsite and control room doses in accordance with 10 CFR 50.67 (Reference 4) as described in Regulatory Guide (RG) 1.183, "Alternative Source Terms for Evaluating Design Basis Accidents at Nuclear Power Reactors." (Reference 3) The revised analysis supports removal of "during core alterations" in the applicability statement for TS 3.9.3. Included in the analysis is the use of updated control room atmospheric dispersion factors based on the ARCON96 methodology. (Reference 9) This amendment will only address the radiological analysis associated to the FHA. In order to address concerns regarding the remaining analyses submitted under LAR 224 letter dated February 28, 2002 (Reference 17), a separate amendment request will be submitted to the NRC in the near future.

In order to support a possible future application for an extended power uprate at PBNP, the FHA has been performed assuming reactor operation at a thermal power of 1683 MWt. This results in conservative fission product inventory for operation at the current licensed power of 1540 MWt.

1.2 Changes to the PBNP Design and Licensing Basis

The following denotes the more significant changes to the PBNP design and licensing bases related to the FHA that are to be considered:

1. The AST methodology is adopted for the composition and timing of radiation releases, as well as accident specific modeling in lieu of RG 1.25.
2. Atmospheric dispersion factors for the control room intake are reanalyzed for existing pathways using ARCON96.
3. The assumed unfiltered inleakage to the Control Room is increased from 10 cfm to 500 cfm.
4. The discharge/decay time prior to fuel movement considered in the FHA is reduced from 161 hours to 65 hours without reliance on containment closure or ventilation filtration/isolation.

1.3 Deviations from the Regulatory Guideline

No exceptions were taken from the analysis guidance provided in Appendix B of RG 1.183 for the FHA.

2.0 Fuel Handling Accident Scenario

2.1 Introduction

The Point Beach Nuclear Power Plant (PBNP) licensing basis for the FHA is currently based on the methodology and assumptions that are derived from RG 1.25 and Standard Review Plan 15.7.4. (References 1 and 2) This analysis is presented in Chapter 14 of the PBNP Final Safety Analysis Report (FSAR), Section 14.2.1 (Reference 16).

RG 1.183 (Reference 3) provides guidance on use of an alternative source term (AST) for use in design basis radiological consequences analyses, as allowed by 10 CFR 50.67 (Reference 4). The offsite and control room radiological consequences for PBNP are re-evaluated using the AST methodology as established in RG 1.183. A brief description of the events addressed by the FHA analysis, input values and assumptions, and the consequences of the accident will be presented.

The current licensed maximum power level is 1540 MWt; however, the analysis in this evaluation models a core power of 1683 MWt to bound any future power uprates. Although the analysis was performed at a higher power level, this license amendment is not requesting approval for power operations at the higher power.

2.2 Current Licensing Basis Description

Many probable accident sequences could occur during the handling and movement of irradiated fuel; however, the possibility of a fuel handling accident is very remote because of the many administrative controls and physical limitations imposed on fuel handling operations. Nevertheless, it is possible that a fuel assembly could be dropped during the handling operations. Therefore, the rupture of all fuel elements in a withdrawn assembly is assumed as a conservative limit for evaluating the offsite and control room radiological consequences of a fuel handling accident.

The current licensing basis accident analysis for the FHA at PBNP assumes a source term derived from reactor power operations at 1548.9 MWt (1540 MWt + 0.6% calorimetric uncertainty) and that the fuel handling accident occurs 161 hours after reactor shutdown. It is assumed that an assembly is dropped and the accident results in damage to all rods in the dropped assembly such that the gaseous fission products contained in the fuel cladding gap is released. The fission product noble gas gap inventories are based on RG 1.25 and the halogen activities are based on NUREG/CR-5009. The damaged fuel assembly is assumed to have been operating at 1.77 times average core power (based on maximum fuel rod radial peaking factor). An overall pool decontamination factor (DF) of 100 for iodine is applied, but no DF is applied to the noble gas releases. All of the activity is released to the environment within two hours. Whole body and thyroid doses are calculated at the exclusion area boundary (EAB) and low population zone (LPZ). The Westinghouse code FHA-RAC was used to calculate the offsite doses. (Reference 19) The thyroid doses for the current licensing basis are determined from the iodine dose conversion factors from ICRP Publication 30. The doses are summarized in Table 2-1.

Table 2-1: PBNP Current Licensing Basis FHA Dose Summary

Location	Whole Body (rem)	Thyroid (rem)
Exclusion Area Boundary	0.23	75
Low Population Zone	0.14	4.5

The radiological consequences of the FHA as defined in the current licensing basis are well within the EAB and LPZ dose limits of 10 CFR 100 (300 rem thyroid and 25 rem whole body). "Well within" is defined by SRP 15.7.4 (Reference 2) as 25% or less of the 10 CFR 100 limits.

2.3 Proposed Licensing Basis Description

As discussed above, FHA methodology used in the existing design basis accident analysis discussed in the PBNP FSAR is to be updated to reflect the guidance provided in RG 1.183. This analysis also includes new control room atmospheric dispersion factors developed using ARCON96. The 30-day doses to an operator in control room due to inhalation of and submersion in the airborne radioactivity releases are developed for FHA. The worst 2-hour period dose at the EAB and the dose at the LPZ for the duration of the release are calculated for the postulated airborne radioactivity releases. This represents the post accident dose to the public due to inhalation and submersion for each of these events.

Under the proposed accident methodology for the FHA, a fuel assembly is assumed to be dropped and damaged during refueling. Analysis of the accident is performed with assumptions selected such that the results are bounding for the accident occurring either inside containment or the spent fuel pool. Per RG 1.183 guidance, the activity from the damaged assembly is released over two hours to the outside atmosphere taking no credit for hold-up or ventilation system filtration. This section describes the assumptions and analyses performed to determine the amount of activity released and the resultant offsite and control room doses.

FHA Input Parameters and Assumptions

The major assumptions and parameters used in the analysis are itemized in Table 2-4. This analysis involves dropping a recently discharged fuel assembly. All activity released from the containment refueling cavity or the spent fuel pool to the atmosphere is assumed to last two hours per the guidance of RG 1.183.

No credit is taken for ventilation filtration system operation in the spent fuel area (i.e., drumming area vent stack). Similarly, no credit is taken for containment purge supply and exhaust system closure or filtration capability. In addition, no credit is taken for the containment equipment hatch placement or closure nor is credit taken for having air lock doors capable of closure. Since the assumptions and parameters used to model the release due to a FHA inside containment are identical to those for a FHA in the spent fuel pool, except for different control room intake atmospheric dispersion factor values (χ/Qs) for the different release paths, the activity released is the same regardless of the location of the accident. In order to bound the accident, the location with the highest χ/Q value is assumed. Therefore, the evaluation presented assumes the accident occurs in the Unit 2 containment building and the release is through the purge stack, resulting in a bounding analysis for a postulated accident in either location. Discussion of the control room and offsite χ/Qs is in Section 5.0.

Consistent with RG 1.183 (Position 1.2 of Appendix B), the radionuclides considered for release are xenons, kryptons, halogens, cesiums, and rubidiums. The list of xenons, kryptons, and halogens considered is given in Table 2-4. These values are based on 1683 MWt core power. The alkali metals, cesium and rubidium are not included in this analysis because they are not assumed to be released from the pool. Per RG 1.183, Appendix B, the cesium and rubidium (particulate radionuclides) released from the damaged fuel rods are assumed to be retained by the water in the refueling cavity and would not be available for release. The calculation of the radiological consequences following a FHA uses gap fractions of 8% for I-131, 10% for Kr-85 and 5% for all other noble gas and iodine nuclides.

As in the current licensing basis, it is assumed that all of the fuel rods in the equivalent of one fuel assembly are damaged to the extent that all their gap activity is released. The assembly inventory is based on the assumption that the subject fuel assembly has been operated at the maximum radial peaking factor of 1.8 times the average core power. The dropped assembly is assumed to have been discharged from the core 65 hours after reactor shutdown; therefore, a decay time of 65 hours is applied to the activities in the analysis. The basis for the core activity is described in Section 4.0.

In accordance with RG 1.183, the iodine species in the pool is 99.85% elemental and 0.15% organic. This is based on the chemical form of the halogens leaving the fuel to be 95% cesium iodide (CsI), 4.85% elemental iodine, and 0.15% organic iodine. It assumed that all CsI instantaneously dissociates in the water and re-evolves as elemental. Thus, 99.85% of the iodine released is elemental.

An effective decontamination factor (DF) of 200 for iodine, as provided in RG 1.183, is used in the analysis to account for scrubbing of the iodine as it evolves through the pool. This DF is applicable to PBNP because the minimum water level requirement of RG 1.183, Appendix B, Step 2 is met. PBNP TS 3.9.6, "Refueling Cavity Water Level," requires that a minimum of 23 feet of water above the top of the reactor vessel flange shall be maintained. Similarly, TS 3.7.10, "Fuel Storage Pool Water Level," requires a minimum of 23 feet of water over the top of the assemblies during movement of irradiated fuel assemblies. Because 99.85% of the iodine is in the elemental form, an elemental DF of 285 is applied in order to achieve an overall DF of 200. No DF is applied to the noble gas releases and an infinite DF is applied to the particulate radionuclides (i.e., the cesium and rubidium).

No credit is taken for removal of iodine by containment and spent fuel pool building ventilation systems' filters nor is credit taken for isolation of release paths. The activity released from the pool is assumed to be released to the outside atmosphere over a 2-hour period. Since no filters or containment isolation is modeled, this analysis supports refueling operation with the equipment hatch or personnel air lock remaining open.

The EAB dose is calculated for the worst 2-hour period, the LPZ dose is calculated for the release duration (i.e., two hours), and the control room doses are calculated for 30 days. Control room operator dose is determined without taking credit for the administration of potassium iodide (KI).

The Westinghouse TITAN5 software code was used to calculate the isotopic releases and resulting radiation doses offsite and in the control room. (Reference 20)

Control Room Ventilation Operation

It is assumed that the control room (CR) HVAC system is initially operating in normal mode, whereby fresh air is being brought into the CR unfiltered at a rate of 2000 cfm. Post-accident, the activity level in the intake duct would cause a high radiation signal almost immediately, which would actuate the emergency mode. However, it is conservatively assumed that the emergency HVAC mode is entered 10 minutes after event initiation based on the area monitor inside the control room reaching its alarm setpoint. Calculations based on the Xe-133 released demonstrate that the area monitor would actuate at approximately 2.8 minutes; however, the time was set to 10 min to increase the margin of safety. The CR HVAC emergency mode (mode 4) is assumed to provide 4550 cfm of filtered outside air with no filtered recirculation. The outside air intake value represents the system's minimum required inlet flow. A sensitivity of the minimum/maximum inlet flow values demonstrated a lower outside air intake during mode 4 produced higher doses. In addition, 500 cfm of unfiltered air inleakage is assumed during the operation of both CR HVAC modes (i.e., normal and emergency).

Sensitivities studies were performed by Westinghouse for PBNP on the control room dose due to a FHA to determine the maximum unfiltered inleakage that the control room can tolerate and meet the 5 rem TEDE limit. The maximum unfiltered inleakage to reach the 5 rem limit with the CR HVAC in mode 4 is 1675 cfm. This value is based on CR HVAC emergency mode actuation at 10 min post-accident.

Acceptance Criteria

According to RG 1.183, the EAB and LPZ dose acceptance criteria for a fuel handling accident is 6.3 rem TEDE, which is approximately 25% of the 10 CFR 50.67 limit of 25 rem. The control room dose acceptance criterion is 5 rem TEDE per 10 CFR 50.67.

2.4 Results and Conclusions

2.4.1 Offsite

The offsite doses due to a design basis FHA are presented in Table 2-2. These doses are well within the dose limits 10 CFR 50.67 and acceptance criteria of RG 1.183.

Table 2-2: FHA Offsite Dose Results Assuming AST

Location	Acceptance Criteria (rem)	TEDE (rem)
Exclusion Area Boundary	6.3	1.6
Low Population Zone	6.3	0.1

2.4.2 Control Room

The Control Room dose due to a design basis FHA are presented in Table 2-3. The dose results are calculated assuming the CR HVAC system emergency mode (mode 4), which is aligned to supply filtered outside air to the control room and no credit is taken for the administration of KI. The maximum unfiltered inleakage case is included in the results. The doses are within the dose limit of 10 CFR 50.67 and acceptance criteria of RG 1.183.

Table 2-3: FHA Control Room Dose Results Assuming AST

Unfiltered Inleakage (cfm)	Acceptance Criteria (rem)	TEDE (rem)
500	5	2.8
1675	5	5

Table 2-4: Assumptions Used for FHA in Containment Dose Analysis

Core Power Level	1683 MWt
Radial Peaking Factor	1.8
Fuel Damaged	1 assembly
Time from Shutdown before Fuel Movement	65 hrs
Activity in the Damaged Fuel Assembly[1]	
I-131	3.00E+05 Ci
I-132	3.05E+05 Ci
I-133	8.87E+04 Ci
I-135	7.81E+02 Ci
Kr-85m	4.31E+00 Ci
Kr-85	4.50E+03 Ci
Kr-88	3.45E-02 Ci
Xe-131m	3.93E+03 Ci
Xe-133m	1.45E+04 Ci
Xe-133	6.17E+05 Ci
Xe-135m	1.25E+02 Ci
Xe-135	1.26E+04 Ci
Gap Fractions	
I-131	8% of activity
Kr-85	10% of activity
Other Iodine and Noble Gas	5% of activity
Chemical Form of Iodine in Pool	
Cesium iodide (CsI)	95%
Elemental	4.85%
Organic	0.15%
Water Depth (minimum)	23 feet
Overall Pool Iodine Scrubbing Factor (DF)	200
Noble Gas Scrubbing Factor (DF)	1.0
Particulate Scrubbing Factor (DF)	Infinite
Filter Efficiency – (purge stack)	No filtration assumed
Isolation of Release	No isolation assumed
Time to Release All Activity	2 hrs
Atmospheric Dispersion Factors (χ/Q)	
Control Room, Unit 2 Purge Stack	5.65E-03 sec/m^3
Exclusion Boundary Area	5.0E-04 sec/m^3
Low Population Zone	3.0E-04 sec/m^3
Control Room Isolation: Actuation Signal/Timing	
Area Monitor High Set-point	2 mrem/hr
Actuation of High Radiation Signal	10 min

[1] The activity values have been decayed by 65 hours but have not been adjusted by the radial peaking factor, release fractions, or the pool scrubbing factors.

3.0 Dose Calculation

3.1 Input Parameters and Assumptions

The total effective dose equivalent (TEDE) doses are determined at the exclusion area boundary (EAB) for the worst 2-hour interval. The TEDE doses at the low population zone (LPZ) are determined for the duration of the release. For the control room (CR) personnel, dose is determined for the duration of the event (i.e., 30 days). The interval for determining control room dose is extended beyond the time when the releases are terminated in order to account for the additional dose to the operators in the control room due to the activity that is assumed to be circulating within the control room envelope.

The TEDE dose is equivalent to the sum of the committed effective dose equivalent (CEDE) from inhalation and the deep dose equivalent (DDE) from external exposure. Effective dose equivalent (EDE) is used in lieu of DDE in determining the contribution of external dose to the TEDE consistent with RG 1.183. The dose conversion factors (DCFs) used in determining the CEDE dose are from the EPA Federal Guidance Report No. 11 (Reference 6) and are given in Table 3-1. The dose conversion factors used in determining the EDE dose are from the EPA Federal Guidance Report No. 12 (Reference 7) and are listed in Table 3-2.

The offsite breathing rates and the offsite atmospheric dispersion factors used in the offsite radiological calculations are provided in Table 3-3 and Table 3-4, respectively. These dispersion factors are identical to those currently used in the PBNP FSAR radiological accident analyses, previously transmitted to the NRC in Reference 19.

Parameters used in the control room personnel dose calculations are provided in Table 3-5. These parameters include the normal operation flow rates, the post-accident operation flow rates, control room volume, filter efficiencies and control room operator breathing rates. Atmospheric dispersion factor is for the most limiting release point and is calculated to the control room intake. This limiting atmospheric dispersion factors is applied to the unfiltered inleakage value as well.

The FHA accident assumes an unfiltered inleakage value of 500 cfm into the control room. This value does not include the ventilation filter break through flow. Current licensing basis analysis for control room habitability assumes an unfiltered inleakage of 10 cfm based on the guidance of the Murphy-Campe methodology. (Reference 13) This early methodology provided a value of 10 cfm unfiltered inleakage for pressurized control rooms, in order to account for the door opening and closing. Recent industry inleakage testing of control room envelopes has shown that 10 cfm may not be a conservative value for this parameter.

In light of this industry issue, PBNP has made improvements to the integrity of the envelope in order to reduce the potential for unfiltered inleakage as well as reduce overall operator dose. These upgrades include hardcasting of ductwork, replacement of current dampers with bubble-tight dampers as well as the addition of new bubble-tight and balancing dampers. The current configuration of the control room is able to maintain a positive pressure greater than 1/8 in. w.g. between all adjacent spaces. The completed modifications as well as those in progress will be able to improve this capability. The control room envelope is discussed further in Section 6.0 of this attachment.

PBNP realizes that the NRC is in the process of releasing a draft generic letter and draft regulatory guides in the near future regarding control room habitability. Since these NRC documents cannot be specifically addressed in this submittal, PBNP will address those issues when the final generic resolution of the issue is completed.

No credit is taken for the radioactive decay during release and transport or for cloud depletion by ground deposition during transport to the control room, exclusion area boundary (EAB) or the low population zone (LPZ). Decay is a depletion mechanism credited only for a source term prior to release to the atmosphere and for activity after it enters the control room. Decay constants for each nuclide are provided in Table 3-6.

3.2 Dose Calculation Models

Offsite Dose Calculation Models

The TEDE dose is calculated for the worst 2-hour period at the EAB. At the LPZ the TEDE dose is calculated up to the time all releases are terminated. The TEDE doses are obtained by combining the CEDE doses and the EDE doses.

Offsite inhalation doses (CEDE) are calculated using the following equation:

$$D_{CEDE} = \sum_i \left[DCF_i \left(\sum_j (IAR)_{ij} (BR)_j (\chi/Q)_j \right) \right]$$

where:

D_{CEDE} = CEDE dose via inhalation (rem).
DCF_i = CEDE dose conversion factor (rem/Ci) via inhalation for isotope i (Table 3.2-1)
$(IAR)_{ij}$ = integrated activity of isotope i released during the time interval j (Ci)
$(BR)_j$ = breathing rate (m^3/sec) during time interval j (Table 3-3)
$(\chi/Q)_j$ = atmospheric dispersion factor (sec/m^3) during time interval j (Table 3-4)

Offsite external exposure (EDE) doses are calculated using the following equation:

$$D_{EDE} = \sum_i \left[DCF_i \left(\sum_j (IAR)_{ij} (\chi/Q)_j \right) \right]$$

where:

D_{EDE} = external exposure dose via cloud immersion (rem)
DCF_i = EDE dose conversion factor (rem·m^3/Ci·sec) via external exposure for isotope i (Table 3-2)
$(IAR)_{ij}$ = integrated activity (Ci) of isotope i released during the time interval j
$(\chi/Q)_j$ = atmospheric dispersion factor (sec/m^3) during time interval j (Table 3-4)

Control Room Dose Calculation Models

CEDE (doses due to inhalation) and EDE (doses due to external exposure) are calculated for 30 days in the control room. The control room is modeled as a discrete volume. The atmospheric dispersion factors calculated for the transfer of activity to the control room intake are used to determine the activity available at the control room intake. The inflow (filtered and unfiltered) to the control room is used to calculate the concentration of activity in the control room. Control room parameters used in the analyses are presented in Table 3-5. Control room atmospheric dispersion factors used in the FHA are provided in Table 2-4.

Control room inhalation doses are calculated using the following equation:

$$D_{CEDE} = \sum_{i}\left[DCF_i\left(\sum_{j} Conc_{ij} * (BR)_j * (OF)_j\right)\right]$$

where:

D_{CEDE} = CEDE dose via inhalation (rem)
DCF_i = CEDE dose conversion factor (rem/Ci) via inhalation for isotope i (Table 3-1)
$Conc_{ij}$ = concentration (Ci-sec/m^3) in the control room of isotope i, during time interval j, calculated dependent upon inleakage and filtered inflow
$(BR)_j$ = breathing rate (m^3/sec) during time interval j (Table 3-5)
$(OF)_j$ = occupancy factor during time interval j (Table 3-5)

Control room external exposure doses are calculated using the following equation:

$$D_{EDE} = \left(\frac{1}{GF}\right) * \sum_{i} DCF_i\left(\sum_{j} Conc_{ij} * (OF)_j\right)$$

where:

D_{EDE} = external exposure dose via cloud immersion in rem.
GF = geometry factor, calculated based on RG 1.183, using the equation:
$GF = \frac{1173}{V^{0.338}}$, where V is the control room volume in ft^3
DCF_i = EDE dose conversion factor (rem·m^3/Ci·sec) via external exposure for isotope i (Table 3-2)
$Conc_{ij}$ = concentration (Ci-sec/m^3) in the control room of isotope i, during time interval j, calculated dependent upon inleakage and filtered inflow
$(OF)_j$ = occupancy factor during time interval j (Table 3-5)

Table 3-1: Committed Effective Dose Equivalent Dose Conversion Factors

Isotope	DCF (rem/curie)	Isotope	DCF (rem/curie)
I-131	3.29E+04	Cs-134	4.62E+04
I-132	3.81E+02	Cs-136	7.33E+03
I-133	5.85E+03	Cs-137	3.19E+04
I-134	1.31E+02	Rb-86	6.63E+03
I-135	1.23E+03		
		Ru-103	8.95E+03
Kr-85m	N/A	Ru-105	4.55E+02
Kr-85	N/A	Ru-106	4.77E+05
Kr-87	N/A	Rh-105	9.56E+02
Kr-88	N/A	Mo-99	3.96E+03
Xe-131m	N/A	Tc-99m	3.30E+01
Xe-133m	N/A		
Xe-133	N/A	Y-90	8.44E+03
Xe-135m	N/A	Y-91	4.89E+04
Xe-135	N/A	Y-92	7.80E+02
Xe-138	N/A	Y-93	2.15E+03
		Nb-95	5.81E+03
Te-127	3.18E+02	Zr-95	2.37E+04
Te-127m	2.15E+04	Zr-97	4.33E+03
Te-129m	2.39E+04	La-140	4.85E+03
Te-129	9.00E+01	La-141	5.81E+02
Te-131m	6.40E+03	La-142	2.53E+02
Te-132	9.44E+03	Nd-147	6.85E+03
Sb-127	6.04E+03	Pr-143	1.09E+04
Sb-129	6.44E+02	Am-241	4.44E+08
		Cm-242	1.73E+07
Ce-141	8.96E+03	Cm-244	2.48E+08
Ce-143	3.39E+03		
Ce-144	3.74E+05	Sr-89	4.14E+04
Pu-238	3.92E+08	Sr-90	1.3E+06
Pu-239	4.30E+08	Sr-91	1.66E+03
Pu-240	4.30E+08	Sr-92	8.10E+02
Pu-241	8.26E+06	Ba-139	1.70E+02
Np-239	2.51E+03	Ba-140	3.74E+03

Table 3-2: Effective Dose Equivalent Dose Conversion Factors

Isotope	DCF (rem·m³/Ci·sec)*	Isotope	DCF (rem·m³/Ci·sec)*
I-131	6.734E-2	Cs-134	0.2801
I-132	0.4144	Cs-136	0.3922
I-133	0.1088	Cs-137 **	0.1066
I-134	0.4810	Rb-86	1.780E-02
I-135	0.2953		
		Ru-103	8.325E-02
Kr-85m	2.768E-02	Ru-105	0.1410
Kr-85	4.403E-04	Ru-106	0.0
Kr-87	0.1524	Rh-105	1.376E-02
Kr-88	0.3774	Mo-99	2.694E-02
Xe-131m	1.439E-03	Tc-99m	2.179E-02
Xe-133m	5.069E-03		
Xe-133	5.772E-03	Y-90	7.030E-04
Xe-135m	7.548E-02	Y-91	9.620E-04
Xe-135	4.403E-02	Y-92	4.810E-02
Xe-138	0.2135	Y-93	1.776E-02
		Nb-95	0.1384
Te-127	8.954E-04	Zr-95	0.1332
Te-127m	5.439E-04	Zr-97	3.337E-02
Te-129m	5.735E-03	La-140	0.4329
Te-129	1.018E-02	La-141	8.843E-03
Te-131m	0.2594	La-142	0.5328
Te-132	3.811E-02	Nd-147	2.290E-02
Sb-127	0.1232	Pr-143	7.770E-05
Sb-129	0.2642	Am-241	3.027E-03
		Cm-242	2.105E-05
Ce-141	1.269E-02	Cm-244	1.817E-05
Ce-143	4.773E-02		
Ce-144	3.156E-03	Sr-89	2.860E-04
Pu-238	1.806E-05	Sr-90	2.786E-05
Pu-239	1.569E-05	Sr-91	0.1277
Pu-240	1.758E-05	Sr-92	0.2512
Pu-241	2.683E-07	Ba-139	8.029E-03
Np-239	2.845E-02	Ba-140	3.175E-02

* Table III.1 in FGR 12 (Reference 5) gives dose conversion factors in Sv·m³/Bq·sec; therefore, each value was multiplied by 3.7E+12 rem/Sv·Bq/Ci to get the units of rem·m³/Ci·sec.

** This is the DCF for BA-137m. Because a significant amount of Ba-137m is produced through Cs-137 decay and the DCF for Cs-137 is lower, the DCF for Ba-137m is used.

Table 3-3: Offsite Breathing Rates

Time Period	Value
0 - 8 hours	3.5E-04 m^3/sec
8 - 24 hours	1.8E-04 m^3/sec
>24 hours	2.3E-04 m^3/sec

Table 3-4:Offsite Atmospheric Dispersion Factors

Location/Time Interval	Value
Exclusion Area Boundary [‡]	5.0E-04 sec/m^3
Low Population Zone	
0 - 8 hours	3.0E-05 sec/m^3
8 - 24 hours	1.6E-05 sec/m^3
1 - 4 days	4.2E-06 sec/m^3
> 4 days	8.6E-07 sec/m^3

[‡] This exclusion area boundary atmospheric dispersion factor is conservatively applied during all time intervals in the determination of the limiting 2-hour period.

Table 3-5: Control Room Parameters

Volume	65,243 ft^3
Control Room Unfiltered In-Leakage	500 cfm
Normal Mode Ventilation Flow Rates	
Filtered Makeup Flow Rate	0.0 cfm
Filtered Recirculation Flow Rate	0.0 cfm
Unfiltered Makeup Flow Rate	2000.0
Emergency Mode Ventilation Flow Rates	
Filtered Makeup Flow Rate *	4950 cfm ± 10%
Filtered Recirculation Flow Rate	0.0 cfm
Unfiltered Makeup Flow Rate	0.0 cfm
Filter Efficiencies	
Elemental	95%
Organic	95%
Particulate	99%
CR Radiation Monitor Setpoint	1.0E-05 μCi/cc for Xe-133
CR Radiation Monitor Location (RE-235)	Ventilation Line upstream of filter
CR Gamma Dose Area Monitor Setpoint	2 mrem/hr
CR Gamma Dose Monitor Location (RE-101)	Wall in the Center of Control Room
CR HVAC Emergency Mode Actuation Delay **	60 sec
Breathing Rate	
0 – 24 hr	3.5E-04 m^3/sec
1 – 4 d	1.8E-04 m^3/sec
4 – 30 d	2.3E-04 m^3/sec
Occupancy Factors	
0 - 24 hours	1.0
1 - 4 days	0.6
4 - 30 days	0.4

* The intake value of 4455 cfm was found to calculate the bounding dose.

** This is the amount of time need to align the CR HVAC from Normal Mode of operation to Emergency Mode.

Table 3-6: Nuclide Decay Constants

Isotope	Decay Constant (hr^{-1})	Isotope	Decay Constant (hr^{-1})
I-131	0.00359	Cs-134	3.84E-05
I-132	0.301	Cs-136	2.2E-03
I-133	0.0333	Cs-137	2.64E-06
I-134	0.791	Rb-86	1.55E-03
I-135	0.105		
		Ru-103	7.35E-04
Kr-85m	0.155	Ru-105	0.156
Kr-85	7.38E-06	Ru-106	7.84E-05
Kr-87	0.545	Rh-105	1.96E-02
Kr-88	0.244	Mo-99	1.05E-02
Xe-131m	0.00243	Tc-99m	0.115
Xe-133m	0.0132		
Xe-133	0.00551	Y-90	1.08E-02
Xe-135m	2.72	Y-91	4.94E-04
Xe-135	0.0763	Y-92	0.196
Xe-138	2.93	Y-93	0.0686
		Nb-95	8.22E-04
Te-127	7.41E-02	Zr-95	4.51E-04
Te-127m	2.65E-04	Zr-97	4.1E-02
Te-129m	8.6E-04	La-140	1.72E-02
Te-129	0.598	La-141	0.176
Te-131m	2.31E-02	La-142	0.45
Te-132	8.86E-03	Nd-147	2.63E-03
Sb-127	7.5E-03	Pr-143	2.13E-03
Sb-129	0.16	Am-241	1.83E-07
		Cm-242	1.77E-04
Ce-141	8.89E-04	Cm-244	4.37E-06
Ce-143	0.021		
Ce-144	1.02E-04	Sr-89	5.72E-04
Pu-238	9.02E-07	Sr-90	2.72E-06
Pu-239	3.29E-09	Sr-91	0.073
Pu-240	1.21E-08	Sr-92	0.256
Pu-241	5.5E-06	Ba-139	0.502
Np-239	0.0123	Ba-140	2.27E-03

4.0 Radiation Source Terms

4.1 Core Inventory

A new core source term has been calculated by Westinghouse for use in the fuel handling accident analysis. The inventory of the fission products in the reactor core is based on maximum full-power operation of the core at a power level equal to 1683 MWt and current licensed values of fuel enrichment and burnup. The core mass calculated is 48.0 MTU with an equilibrium cycle length of 17175 MWD/MTU. The fuel was modeled with an active fuel length of 132 inches with axial blanket regions of six inches in length. The current licensing core power level is 1540 MWt. Although the analysis was performed at the higher power level, this amendment request is not asking approval for operation at the higher power level.

The ORIGEN2 computer code was used to determine the equilibrium core inventory. ORIGEN2 is a versatile point depletion and radioactive decay computer code for use in simulating nuclear fuel cycles and calculating the nuclide compositions and characteristics of materials contained therein. The equilibrium core inventory runs model a single assembly in each of seven regions. Sixteen new feed assemblies with an active fuel enrichment of 4.40 w/o and 24 assemblies with an active fuel enrichment of 4.95 w/o are assumed. In each assembly, the axial blanket region is assumed to have an enrichment of 2.60 w/o. An average enrichment is calculated for each type of assembly for input to ORIGEN2.

Burnup calculations, reflecting each of the appropriate power histories are performed. The ORIGEN2 runs model a single assembly in each of the seven regions: 16 assemblies of fresh (4.40 w/o), once-burnt and twice-burnt "A" regions, 24 assemblies of fresh (4.95 w/o), once burnt and twice burnt "B" regions, and a seventh region consisting of a single thrice-burnt "A" assembly. The total inventory for each region at the end of the equilibrium cycle is then determined by multiplying the assembly value by the number of assemblies per region. Finally, the seven regions are summed to produce a total core inventory. No shutdowns are modeled between cycles, while strictly conservative, this simplification is expected to have virtually no effect on core inventory. The equilibrium core at the end of a fuel cycle is assumed to consist of fuel assemblies with once, twice and thrice burnups.

The core inventory developed using ORIGEN2 based on the above methodology includes many isotopes that are not dose significant. Only those dose significant isotopes relative to light water reactor accidents is presented in Table 4-1.

Table 4-1: Equilibrium Core Fission Product Activities at 1683 MWt

Isotope	Activity (Ci)	Isotope	Activity (Ci)
I-131	4.48E+07	Cs-134	9.23E+06
I-132	6.46E+07	Cs-136	2.30E+06
I-133	9.15E+07	Cs-137	5.92E+06
I-134	1.01E+08	Rb-86	9.36E+04
I-135	8.56E+07		
		Ru-103	6.84E+07
Kr-85m	1.20E+07	Ru-105	4.59E+07
Kr-85	5.45E+05	Ru-106	2.44E+07
Kr-87	2.31E+07	Rh-105	4.25E+07
Kr-88	3.25E+07	Mo-99	8.20E+07
Xe-131m	4.81E+05	Tc-99m	7.17E+07
Xe-133m	2.85E+06		
Xe-133	9.07E+07	Y-90	4.49E+06
Xe-135m	1.79E+07	Y-91	5.73E+07
Xe-135	2.33E+07	Y-92	5.93E+07
Xe-138	7.58E+07	Y-93	6.83E+07
		Nb-95	7.76E+07
Te-127	4.68E+06	Zr-95	7.69E+07
Te-127m	6.20E+05	Zr-97	7.55E+07
Te-129m	2.10E+06	La-140	8.22E+07
Te-129	1.40E+07	La-141	7.48E+07
Te-131m	6.44E+06	La-142	7.24E+07
Te-132	6.36E+07	Nd-147	3.01E+07
Sb-127	4.72E+06	Pr-143	6.84E+07
Sb-129	1.42E+07	Am-241	7.95E+03
		Cm-242	2.01E+06
Ce-141	7.58E+07	Cm-244	1.76E+05
Ce-143	6.96E+07		
Ce-144	5.93E+07	Sr-89	4.46E+07
Pu-238	1.58E+05	Sr-90	4.31E+06
Pu-239	1.60E+04	Sr-91	5.47E+07
Pu-240	2.33E+04	Sr-92	5.90E+07
Pu-241	6.36E+06	Ba-139	8.20E+07
Np-239	8.54E+08	Ba-140	7.94E+07

5.0 Accident Atmospheric Dispersion Factors (χ/Q)

5.1 Control Room Atmospheric Dispersion Factors

The control room intake χ/Q values for the potential FHA release points are calculated using ARCON96, Atmospheric Relative Concentrations in Building Wakes methodology. (Reference 8 and 9) Input data consists of hourly on-site meteorological data, release characteristic such as release height, the building area affecting the release, and various receptor parameters such as its distance and direction from the release to the control room air intake and intake height.

A continuous temporally representative 3-year period of hourly average data from the PBNP primary meteorological tower (i.e., January 1, 1997 through December 31, 1999) is used in this calculation. Each hour of data, at a minimum, has a wind speed and direction at the 10-meter level and a temperature difference between the 45 and 10-meter levels. The data recovery average for all three years is greater than 90%. The individual average for years 1997 and 1998 were greater than 93%; however, 1999 had less than 90% data recovery.

Most of the data in December 1999 is unavailable due to the replacement of the meteorology data recorders in the control room. The data had been captured via strip chart recorders. In December of 1999, these recorders were replaced with a digital recorder. While the data recorders were out of service, meteorological data was received from the Kewaunee Nuclear Power Plant, roughly five miles North of Point Beach. This compensatory measure is commensurate with the actions taken per the PBNP Emergency Plan if backup meteorological data is needed. Although the Kewaunee data is qualified for use in an emergency drill/event, it is deemed not appropriate for developing site-specific accident dispersion factors to be used in a licensing application.

All releases are conservatively treated as ground level as there are no releases at this site that are high enough to escape the aerodynamic effects of the plant buildings (i.e., 2.5 times Containment Building height per Reference 10). All releases are assumed to be under the influence of the containment building wake effect, with the exception of the spent fuel building release. The applicable structure relative to building wake effects on the spent fuel building release is the auxiliary building.

The release point/paths relevant to the FHA for which χ/Q values are calculated are listed below. For each release location, the receptor is the control room fresh air intake. This receptor location is also used conservatively for unfiltered inleakage. Figure 1 shows the release locations with respect to the receptor location.

1. Unit 2 Purge Stack
2. Spent Fuel Pool Deck
3. Drumming Area Vent Stack

As discussed in the analysis portion of this attachment (Section 2.3), the FHA could occur in two locations: containment or the spent fuel pool. PBNP Unit 2 containment is closer to the control room intake, therefore, its χ/Q value could be conservatively applied to an accident which occurs in Unit 1 containment. The spent fuel pool is located in the Primary Auxiliary Building between the Unit 1 and Unit 2 facades. From its location there are two potential release paths: the drumming area vent stack and spent fuel pool deck . The drumming area vent stack exhausts the air from the spent fuel pool area as well as the drumming area. The spent fuel pool deck χ/Q value effectively models no ventilation system in operation. The analysis for both locations (as well as all release paths) are based on the same methodology and input parameter values except for the χ/Q values. In order to develop an FHA analysis that is bounding for both locations, the highest χ/Q is used. Assumptions used to develop the χ/Q values for both release locations are described to demonstrate the more restrictive dispersion factor.

The following assumptions are made for these calculations:

1. The plume centerline from each release is conservatively transported directly over the control room air intake.
2. All releases are assumed to be under the influence of the containment building wake effect, with the exception of the spent fuel building release. The applicable structure relative to building wake effects on the spent fuel building release is the auxiliary building based on the release to receptor orientation.
3. The control room air intake χ/Q values are representative of the χ/Q values for the center of the control room, and the north and south doors since the distances and directions from these releases to these receptors are very similar.
4. The ARCON96 default wind direction range of 90°, centered on the direction that transports the gaseous effluents from the release points to the receptors is used in the calculation per DG-1111. (Reference 11)
5. The ARCON96 values for surface roughness length (i.e., 0.20 meter) and sector averaging constant (i.e., 4.3) are based on DG-1111. (Reference 11)
6. All releases are conservatively treated as ground level as there are no release conditions that merit categorization as an elevated release (i.e., 2.5 times the containment building height, Reference 10) with respect to the PBNP configuration.
7. The spent fuel building release from the pool operating deck are at the 66 ft level for the edge of the building near the cask unloading area.

The ARCON96 input parameters for the Unit 2 Containment Purge Stack, the Spent Fuel Pool, and Drumming Area Vent Stack are listed in Table 5-1, Table 5-2, and Table 5-3, respectively. The χ/Q values for all release locations are summarized in Table 5-4. From a comparison of the 0 – 2 hr χ/Q values for each of the potential release paths, it can be concluded that the use of Unit 2 Purge Stack χ/Q will result in the most restrictive control room dose.

5.2 Offsite Atmospheric Dispersion Factors

The χ/Q values for the PBNP EAB and the LPZ are those from the current licensing basis.(References 16 and 18) These values were developed from the guidance provided in RG 1.145 (Reference 10) and meteorological data collected at the site from January 1, 1991 through December 31, 1993. The offsite χ/Q values are presented in Table 5-5 and represent the 95th percentile sector χ/Q values.

Table 5-1: Unit 2 Containment Purge Stack ARCON96 Input Parameters

Input Parameter	Value
Meteorological Data	Determined from data collected: 1997-1999
Height of Lower Wind Speed Instrument	10 m
Height of Upper Wind Speed Instrument	45 m
Release Type	Ground
Release Height (Unit 2 Purge Stack)	43.3 m
Building Area Perpendicular to Wind Direction	1180 m^2
Effluent Vertical Velocity	0 m/sec
Vent or Stack Flow	0 m^3/sec
Vent or Stack Radius	0 m
Direction from the Control Room Intake to U2 Purge Stack	283°
Wind Direction Sector Width	90°
Distance to Control Room Air Intake	26.1 m
Control Room Air Intake Height	26.1 m
Terrain Elevation Difference	0 m
Minimum Wind Speed	0.5 m/sec
Surface Roughness Length	0.2 m
Sector Averaging Constant	4.3
Initial Values of sigma y and sigma z	0

Table 5-2: Spent Fuel Pool ARCON96 Input Parameters

Input Parameter	Value
Meteorological Data	Determined from data collected: 1997-1999
Height of Lower Wind Speed Instrument	10 m
Height of Upper Wind Speed Instrument	45 m
Release Type	Ground
Release Height (SFP Operating Deck)	12.2 m
Building Area Perpendicular to Wind Direction	594 m^2
Effluent Vertical Velocity	0 m/sec
Vent or Stack Flow	0 m^3/sec
Vent or Stack Radius	0 m
Direction from the Control Room Intake to SFP	236 °
Wind Direction Sector Width	90°
Distance to Control Room Air Intake	54.4 m
Control Room Air Intake Height	26.1 m
Terrain Elevation Difference	0 m
Minimum Wind Speed	0.5 m/sec
Surface Roughness Length	0.2 m
Sector Averaging Constant	4.3
Initial Values of sigma y and sigma z	0

Table 5-3: Drumming Area Vent Stack ARCON96 Input Parameters

Input Parameter	Value
Meteorological Data	Determined from data collected: 1997-1999
Height of Lower Wind Speed Instrument	10 m
Height of Upper Wind Speed Instrument	45 m
Release Type	Ground
Release Height (top of stack)	43.3 m
Building Area Perpendicular to Wind Direction	2266 m^2
Effluent Vertical Velocity	0 m/sec
Vent or Stack Flow	0 m^3/sec
Vent or Stack Radius	0 m
Direction from the Control Room Intake to SFP	220 °
Wind Direction Sector Width	90°
Distance to Control Room Air Intake	63.7 m
Control Room Air Intake Height	26.1 m
Terrain Elevation Difference	0 m
Minimum Wind Speed	0.5 m/sec
Surface Roughness Length	0.2 m
Sector Averaging Constant	4.3
Initial Values of sigma y and sigma z	0

Table 5-4: Point Beach Control Room Atmospheric Dispersion Factors (sec/m^3)

	Averaging Period				
Release Location	**0 – 2 hr**	**2 – 8 hr**	**8 – 24 hr**	**1 – 4 d**	**4 – 30 d**
Unit 2 Purge Stack	5.65E-03	3.82E-03	1.39E-03	1.11E-03	1.02E-03
Spent Fuel Pool	2.06E-03	1.68E-03	5.65e-04	5.22E-04	4.50E-04
Drumming Area Vent Stack	1.55E-03	1.12E-03	3.81E-04	3.11E-04	2.57E-04

Table 5-5: Point Beach Offsite Atmospheric Dispersion Factors (sec/m^3)

	Averaging Period			
Receptor Location	**0 – 8 hr**	**8 – 24 hr**	**1 – 4 d**	**4 – 30 d**
Exclusion Area Boundary	5.0E-04	5.0E-04	5.0E-04	5.0E-04
Low Population Zone	3.0E-05	1.6E-05	4.2E-06	8.6E-07

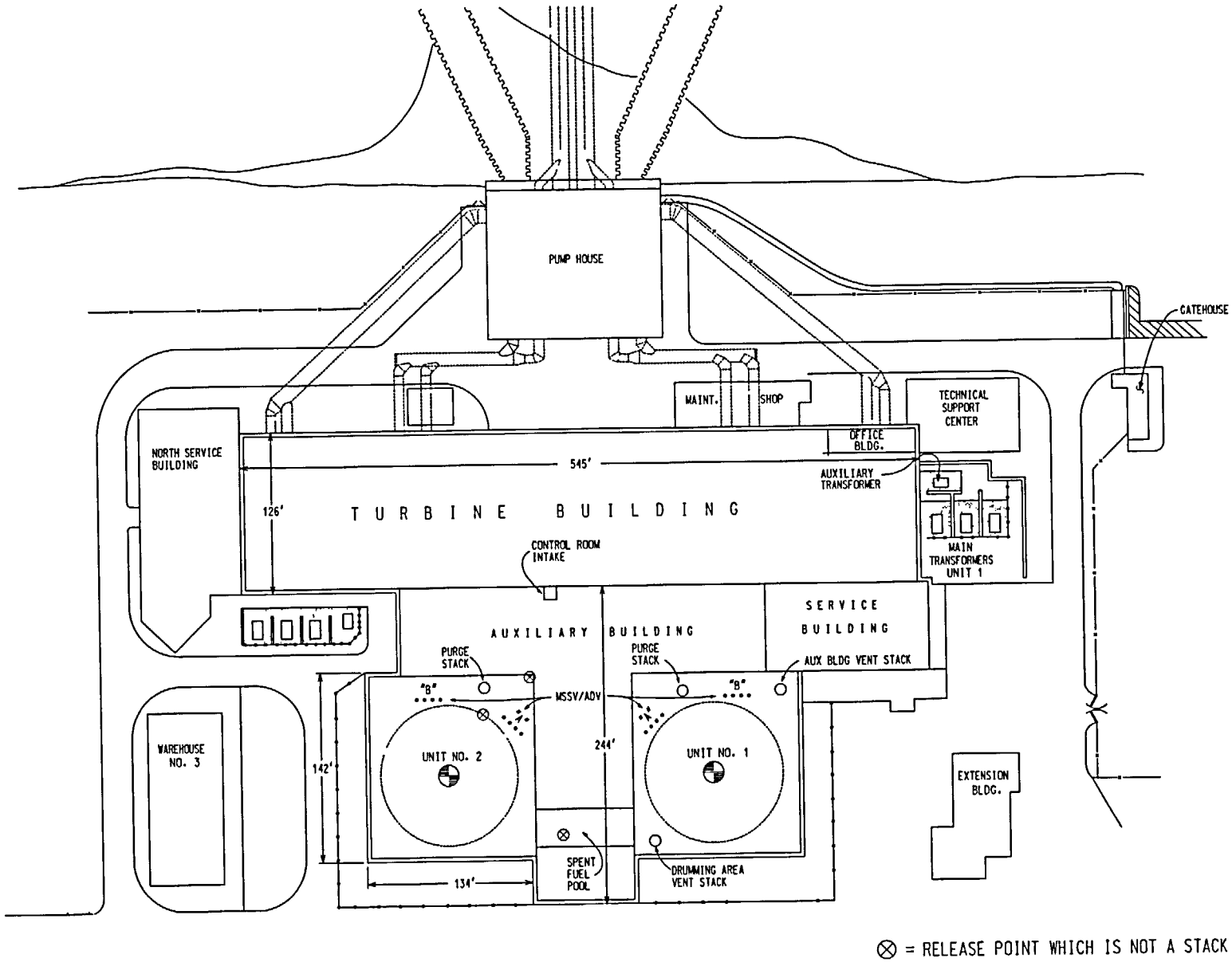

Figure 1: Release Locations With Respect to the Control Room Intake

6.0 Control Room Envelope

6.1 Control Room Licensing Basis

The PBNP control room design was implemented and licensed under site specific General Design Criterion (GDC) 11, which existed before the issuance of the GDC in 10 CFR 50, Appendix A. Simply stated, PBNP GDC 11 requires that the facility shall be provided with a control room from which actions to maintain safe operational status can be controlled. Adequate radiation protection shall be provided to permit continuous occupancy of the CR under any credible post-accident condition or as an alternative, access to other areas as necessary to shutdown and maintain safe control of the facility without excessive radiation exposures of personnel. Although this design criterion is applicable in many other areas, such as fire protection, HELB, security, etc., the focus of this section is solely on radiological habitability of the control room.

The control room ventilation system is designed to provide heating, ventilation, air conditioning, and radiological habitability for the control and computer rooms, both of which are within the control room envelope. For radiological habitability the system is capable of operating in four different modes providing for control room pressurization to limit inleakage; makeup and recirculation through HEPA and charcoal filters to remove contaminates; and recirculation without filtration or makeup. Design and system reviews stemming from the post-TMI initiatives demonstrate that the system is capable of meeting the dose limits of 10 CFR 50 Appendix A GDC-19 as required by NUREG-0737, Item III.D.3.4 while taking credit for potassium iodide (KI) to reduce the thyroid dose. The design factors affecting the system's ability to meet the above dose limits include: actuation on a containment isolation or high radiation signal, emergency filtration flow rate 4950 cfm ± 10%, maintaining a positive pressure ≥1/8 in. w.g. during Mode 4 operation, and meeting minimum filtration efficiencies specified in the test section for the HEPA and charcoal filters.

Due to the vintage of the plant design (i.e., 1960s), the control room HVAC system was designed and constructed similar to commercial applications (e.g., using ductwork construction with S-Slip and Drive joints). Since the original construction, modifications have been made to the control room envelope to improve its integrity and improve overall system reliability. In addition, the plant licensing basis allowed a control room habitability analysis that relies on the administration of the prophylactic KI to the operators to limit the potential dose to the thyroid. This analysis is not required to consider a loss of offsite power (LOOP) coincident with the limiting design basis accident (i.e., LOCA) for control room dose calculations. These issues were re-examined by the NRC during review of License Amendments 174 and 178 (Reference 14). These amendments were approved on July 9, 1997 and contained a license condition referencing reliance on KI. Upon further review, the NRC staff accepted the original licensing basis pertaining to control room habitability, as documented in USNRC letter to WE dated April 7, 2000. (Reference 8) The license condition regarding reliance on KI was subsequently eliminated in approved License Amendments 198 and 203 on August 15, 2000. (Reference 17)

6.2 Control Room Design and Ventilation System (VNCR) Description

The PBNP control room envelope is located in the control building within the turbine building approximately half way between Unit 1 and Unit 2. The control room envelope consists of the control room, the computer room, and each room's associated ductwork as it transitions through the mechanical equipment room. The cable spreading room on the 26' elevation (directly below the control room) and the mechanical equipment room on the 60' elevation (directly above the control room) are not part of the control room envelope. Figure 2 shows the relation of all four areas within the control building.

Two types of radiation monitors with control functions are located within the control room envelope: an area monitor and a process monitor. The area monitor (RE-101), located on the west wall of the control room, is a low-range gamma sensitive G-M tube detector assembly. The process monitor (RE-235), is a scintillation type detector, calibrated to Xe-133, and physically located on the control building roof. The sensing line penetrates the control room supply ductwork downstream of the control room HVAC filter unit. Because noble gases cannot be filtered via HEPA or charcoal, the monitor measurements are relatively unaffected by the filters. A "high" signal from either detector will automatically switch the control room ventilation system from the normal mode of operation to the emergency mode. The descriptions of these modes are given in the following discussion.

The control room ventilation system is designed for four modes of operation. Mode 1 is normal operation, Mode 2 is 100% recirculation, Mode 3 is 25% filtered return air / 75% recirculation, and Mode 4 is 25% filtered outside air / 75% recirculation. Because Modes 2 and 3 are not relied on for the accident analysis presented in this submittal, they will not be discussed further.

For Mode 1, one of the two normal supply/recirculation fans (W-13B1 or W-13B2) is started. The fan start opens the outside air damper VNCR-4849C to predetermined throttled position to supply approximately 1000 – 1500 cfm of makeup air ducted from an intake penthouse located on the roof of the auxiliary building. The makeup air and return air from the control and computer rooms passes through roughing filter F-43 and cooling coils HX-100A & B before entering one of the normal recirculation fans. Room thermostats and/or humidistats control operation of the chilled water unit supplying the cooling coils. After leaving the normal recirculation fan, the filtered and cooled air passes through separate heating coils, HX-92 and HX-91A & B, and humidifiers, Z-78 and Z-77, to the computer and control rooms respectively. Room thermostats and humidistats also control the operation of the heating coils and humidifiers. Also operating in Mode 1 are computer room supplemental air conditioning unit W-107A/HX-190A/HX-191A or W-107B/HX-190B/HX-191B and control room washroom exhaust fan W-15.

Mode 4 is currently initiated by a high radiation signal from the control room area monitor RE-101, or a high radiation signal from noble gas monitor RE-235 located in the supply duct to the control room, or manually from panel C-67. While in Mode 4, the return air inlet damper VNCR-4851B to the emergency fans is closed and outside air supply damper VNCR-4851A opens. This allows approximately 4950 cfm of makeup air to pass through filter F-16 and the emergency fan to the suction of the normal recirculation fan, ensuring a positive pressure of ≥ 1/8 in. w.g. is maintained in the control and computer rooms to prevent inleakage.

In order to determine the limiting Mode 4 HVAC operation for each accident scenario, sensitivities were performed to determine whether the minimum or maximum fresh air inlet flow rate was bounding. As mentioned above, Mode 4 is designed to operate with approximately 4950 cfm of filtered outside air, therefore, analyses were performed assuming 4950 cfm ± 10% to calculate the bounding case. For all analyzed accidents, the lower flow rate, 4455 cfm, resulted in bounding dose consequence to the control room operator.

In light of recent industry concerns with regard to control room habitability, recently PBNP modified the control room HVAC system to further increase system reliability, improve program implementation, gain safety margin, and increase the integrity of the control room HVAC system by tightening up the envelope to reduce the potential areas for unfiltered air infiltration. Improvements to the system were made by the replacement of dampers on the periphery of the control room envelope (CRE) with bubble-tight dampers (extremely low-leakage dampers) and hardcasting the seams of portions of the CRE ductwork. The hardcasting is a sealant applied to the seams of the ductwork consisting of a fibrous material bonded with a polymer adhesive material. Other modifications completed include installation of a new balance damper and bubble-tight isolation damper upstream of the cable spreading room outside air intake isolation, installation of a new bubble-tight damper at the discharge of the control room washroom exhaust fan, installation of three new bubble-tight dampers for the control room, computer room, and cable spreading room smoke and heat exhaust fan isolation, upgrades to the control room backup instrument air system, replacement of existing control room washroom exhaust fan with a direct drive fan and improved differential pressure indication between the control room and the turbine building (Figure 3 and Figure 4).

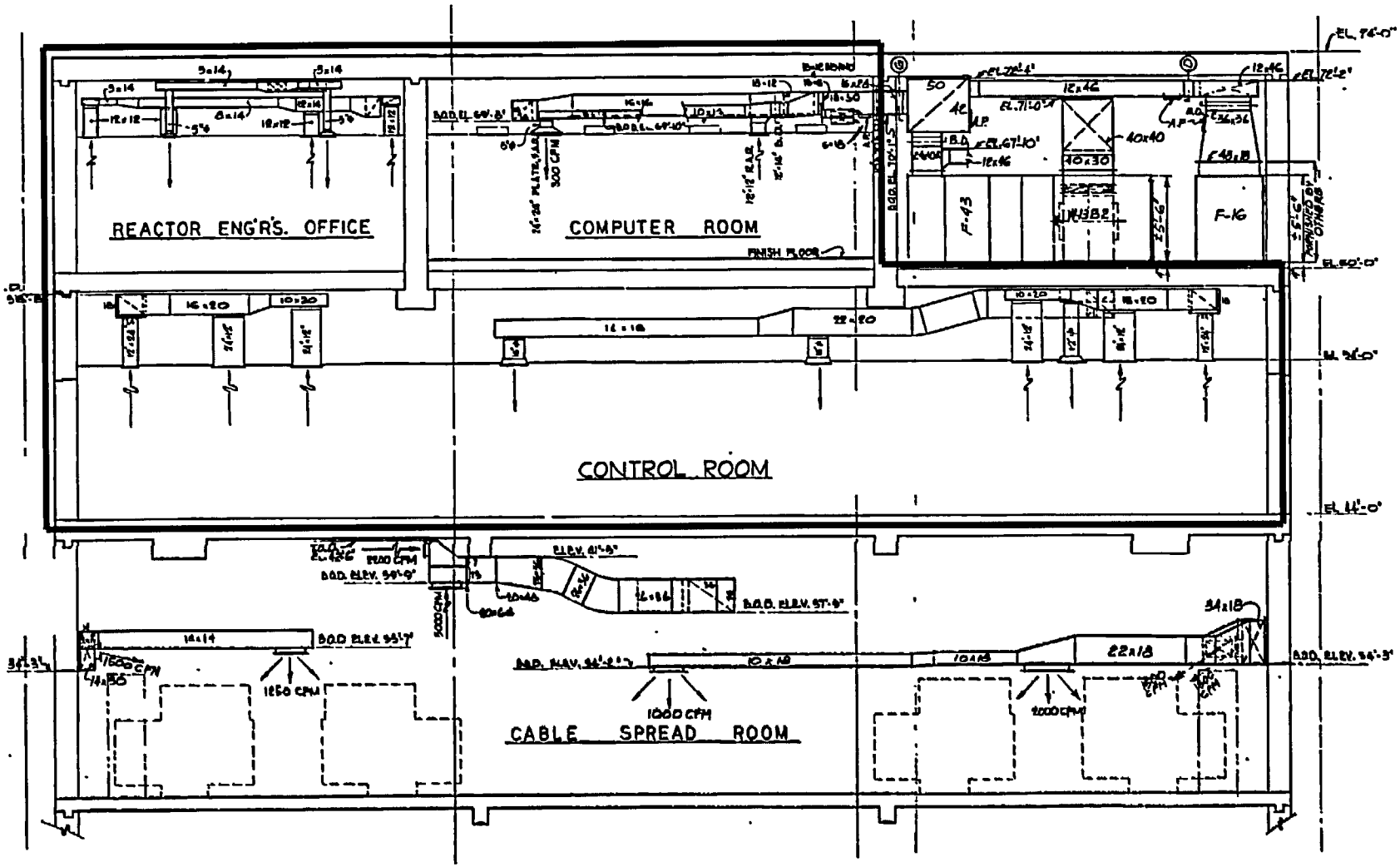

Bold line indicates areas in the control room envelope.

Figure 2: Control Room Envelope

CONTROL ROOM VENTILATION OPERATING MODES

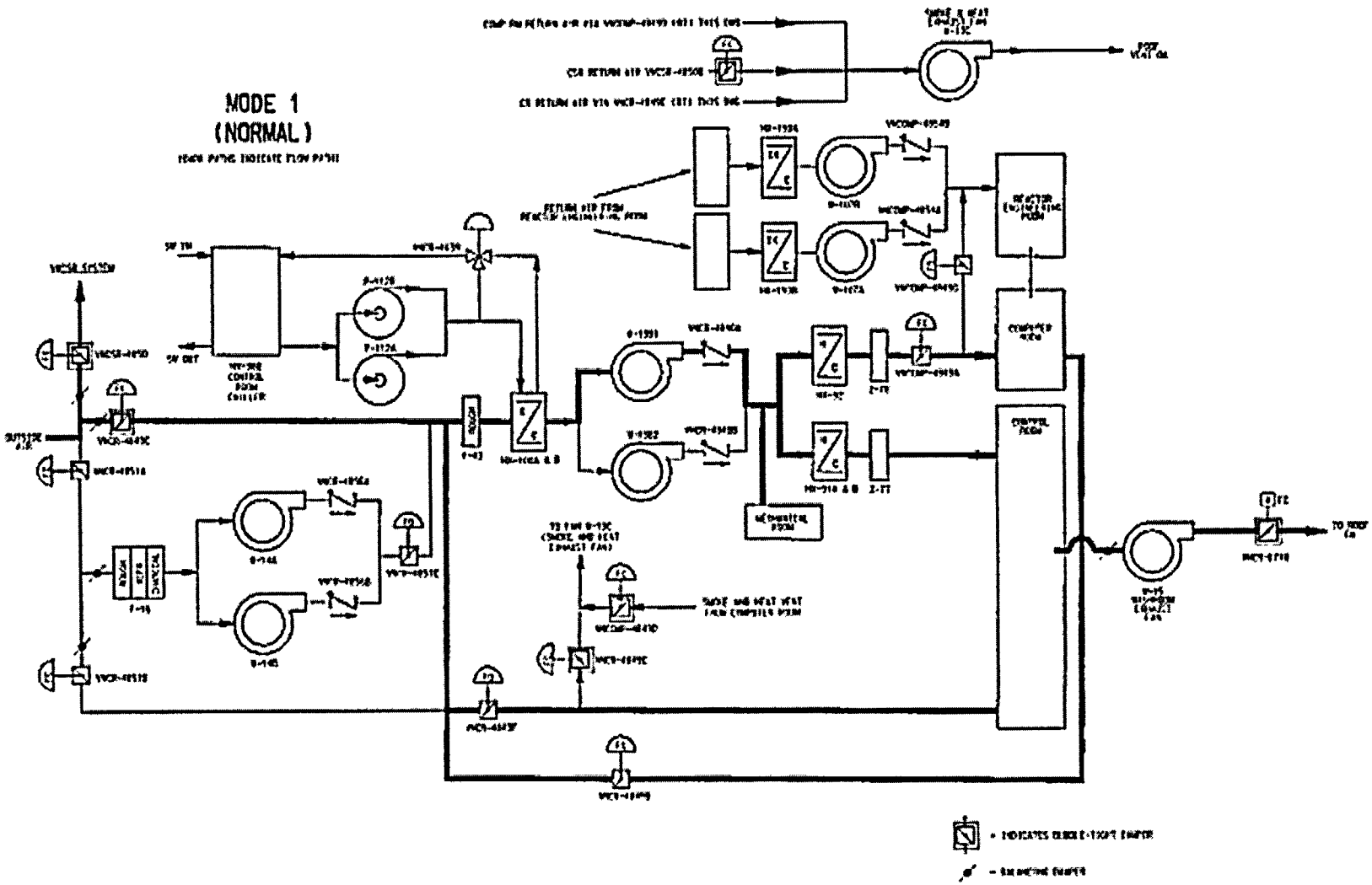

Figure 3: PBNP CR HVAC Mode 1 – Normal Mode – System Alignment

CONTROL ROOM VENTILATION OPERATING MODES

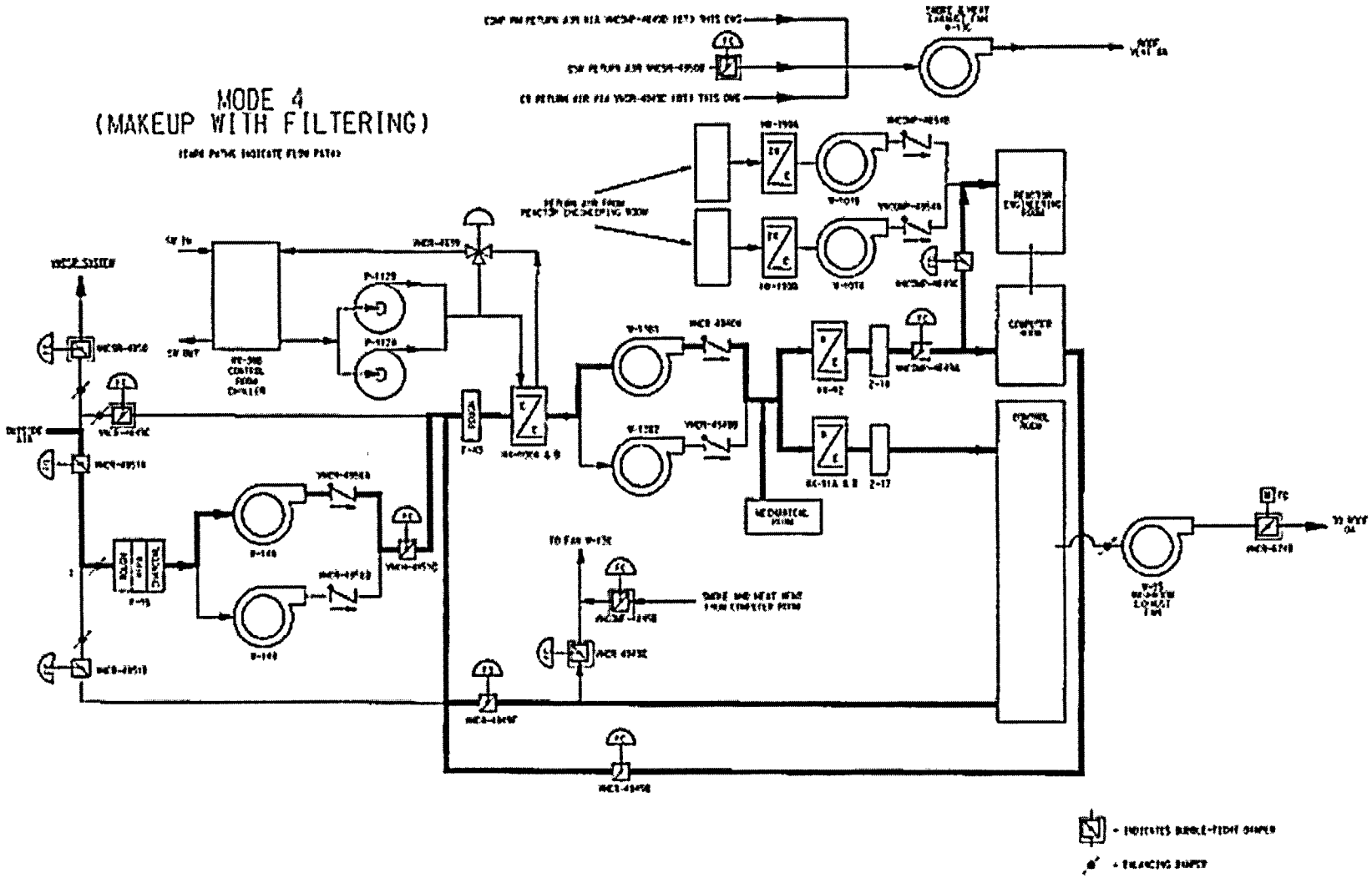

Figure 4: PBNP CR HVAC Mode 4 – Emergency Mode – System Alignment

7.0 Conclusion

An assessment of the radiological consequences due to a FHA using the AST methodology concludes that the EAB, LPZ, and control room doses are within the limits of 10 CFR 50.67 and within the acceptance criteria of RG 1.183 without crediting closure of the equipment door, personnel air lock doors, and ventilation filtration capabilities. In addition, the control room dose does not credit the administration of KI. Because the FHA can occur in the either containment as well as the spent fuel pool, the most limiting atmospheric dispersion factor was chosen to bound this accident. Using the ARCON96 code, the Unit 2 purge stack provides the most limiting atmospheric dispersion.

In conclusion, there will be no adverse impact on the public health and safety.

8.0 References

1 USNRC, "Assumptions Used for Evaluation the Potential Radiological consequences of a Fuel Handling Accident in the Fuel Handling and Storage Facility for Boiling And Pressurized Water Reactors," Regulatory Guide 1.25, March 23, 1972.

2 USNRC, "Standard Review Plan," NUREG-0800, Section 15.7.4, "Radiological Consequences of Fuel Handling Accidents," Revision 1, July 1981.

3 USNRC, Regulatory Guide 1.183, "Alternative Source Terms for Evaluating Design Basis Accidents at Nuclear Power Reactors," July 2000.

4 10 CFR 50.67, "Accident Source Term."

5 USEPA, "Limiting values of Radionuclide Intake and Air Concentration and Dose Conversion Factors for Inhalation Submersion, and Ingestion," Federal Guidance Report No. 11, September 1988.

6 USEPA, "External Exposure to Radionuclides in Air, Water, and Soil," Federal Guidance Report No. 12, September 1993.

7 USNRC letter to M. Sellmen, WE, " Point Beach Nuclear Plants, Units 1 and 2 – Discussion of Amendments Pertaining to Control Room Habitability (TAC Nos. MA1082 and MA1083)," April 7, 2000.

8 ARCON96, Version 1.0, "Code System to Calculate Atmospheric Relative Concentrations in Building Wakes," RSICC Computer Code Collection No. CCC-664.

9 J.V. Ramsdell, "ARCON96: Atmospheric Diffusion for Control Room Habitability Assessments," NUREG/CR-5055, USNRC, May 1997.

10 USNRC, "Atmospheric Dispersion Models for Potential Accident Consequence Assessments at Nuclear Power Plants," Regulatory Guide 1.145, Revision 1, November 1982.

11 USNRC, "Atmospheric Relative Concentrations for Control Room Radiological Habitability Assessments at Nuclear Power Plants," Draft Regulatory Guide DG-1111, December 2001.

12 USNRC Letter to R. Grigg, WE, "PBNP Unit Nos. 1 and 2 – Issuance of Amendments Regarding Technical Specification Changes for Revised System Requirements to Ensure Post-Accident Containment Cooling Capability (TAC Nos. M96741 and M96742)," July 9, 1997, Amendment Nos. 174/178.

13 K.G. Murphy and K.M. Campe, "Nuclear Power Plant Control Room ventilation System Design for Meeting General Criterion 19," 13th AEC Air Cleaning Conference, August 1974.

14 Westinghouse Controlled Copy of ORIGEN 2.1 – Isotope Generation and Depletion Code Matrix Exponential Method.

15 USNRC letter to Michael B. Sellman, NMC, " Point Beach Nuclear Plants, Units 1 and 2 – Issuance of Amendments RE: Control Room Habitability (TAC Nos. MA9042 and MA9043)," August 15, 2000.

16 PBNP Final Safety Analysis Report, Section 14.2.1, "Fuel Handling Accident," 6/01.

17 PBNP Correspondence to the NRC, NRC 2002-0019, "Dockets 50-266 and 50-301, Point Beach Nuclear Plant, Units 1 and 2, License Amendment Request 224, Control Room Habitability," 2/28/2002.

18 Letter PBL 97-0057, from D.F. Johnson (WE) to the NRC, "Supplement to Technical Specifications Change Request 192 PBNP Units 1 and 2," 2/13/1997.

19 Westinghouse Software Code, Fuel Handling Accident Radiological Analysis Code, Version 1.00.

20 Westinghouse Code, TITAN5, Version 4.10.

ATTACHMENT III

PROPOSED TECHNICAL SPECIFICATION CHANGES

FOR

LICENSE AMENDMENT REQUEST 234

SELECTIVE IMPLEMENTATION OF ALTERNATE SOURCE TERM FOR

POINT BEACH NUCLEAR PLANT, UNITS 1 AND 2

FUEL HANDLING ACCIDENT ANALYSIS

(additions are double-underlined; deletions are strikethrough)

3.9 REFUELING OPERATIONS

3.9.3 Containment Penetrations

LCO 3.9.3 The containment penetrations shall be in the following status:

a. The equipment hatch closed and held in place with all bolts;

b. One door in each air lock is capable of being closed; and

c. Each Containment Purge and Exhaust System penetration either:

1. closed by a manual or automatic isolation valve, blind flange, or equivalent, or

2. capable of being closed by an OPERABLE Containment Purge and Exhaust Isolation System.

APPLICABILITY: ~~During CORE ALTERATIONS,~~
During movement of recently irradiated fuel assemblies within containment.

ACTIONS

CONDITION	REQUIRED ACTION	COMPLETION TIME
A. One or more containment penetrations not in required status.	~~A.1~~ ~~Suspend CORE ALTERATIONS.~~	~~Immediately~~
	~~AND~~	
	A.~~2~~1 Suspend movement of recently irradiated fuel assemblies within containment.	Immediately

SURVEILLANCE REQUIREMENTS

SURVEILLANCE		FREQUENCY
SR 3.9.3.1	Verify each required containment penetration is in the required status.	7 days
SR 3.9.3.2	----------NOTE---------- Not applicable to containment purge and exhaust valve(s) in penetrations closed to comply with LCO 3.9.3.c.1. ---------- Verify each required containment purge and exhaust valve actuates to the isolation position on an actual or simulated actuation signal.	18 months

ATTACHMENT IV

PROPOSED TECHNICAL SPECIFICATION BASES CHANGES

FOR

LICENSE AMENDMENT REQUEST 234

SELECTIVE SCOPE IMPLEMENTATION OF ALTERNATE SOURCE TERM FOR

POINT BEACH NUCLEAR PLANT, UNITS 1 AND 2

FUEL HANDLING ACCIDENT ANALYSIS 2

(additions are double-underlined; deletions are strikethrough)

B 3.7 PLANT SYSTEMS

B 3.7.10 Fuel Storage Pool Water Level

BASES

BACKGROUND

The minimum water level in the fuel storage pool meets the assumptions of iodine decontamination factors following a fuel handling accident. The specified water level shields and minimizes the general area dose when the storage racks are filled to their maximum capacity. The water also provides shielding during the movement of spent fuel.

A general description of the fuel storage pool design is given in the FSAR, Section 9.4 (Ref. 1). A description of the Spent Fuel Pool Cooling and Cleanup System is given in the FSAR, Section 9.9 (Ref. 2). The assumptions of the fuel handling accident are given in the FSAR, Section 14.2.1 (Ref. 3).

APPLICABLE SAFETY ANALYSES

The minimum water level in the fuel storage pool meets the assumptions of the fuel handling accident described in Regulatory Guide ~~1.25~~ 1.183 (Ref. 4). The resultant 2 hour ~~thyroid~~ dose per person at the exclusion area boundary is ~~a small fraction of~~ within the ~~10 CFR 100~~ 10 CFR 50.67 (Ref. 5) limits.

According to Reference 4, there is 23 ft of water between the top of the damaged fuel bundle and the fuel pool surface during a fuel handling accident. With 23 ft of water and an irradiated fuel decay time of 65 hours or more, the assumptions of Reference 4 can be used directly. In practice, this LCO preserves this assumption for the bulk of the fuel in the storage racks. In the case of a single bundle dropped and lying horizontally on top of the spent fuel racks, however, there may be < 23 ft of water above the top of the fuel bundle and the surface, indicated by the width of the bundle. To offset this small nonconservatism, the analysis assumes that all fuel rods fail, although analysis shows that only the first few rows fail from a hypothetical maximum drop.

The fuel storage pool water level satisfies Criteria 2 and 3 of the NRC Policy.

LCO

The fuel storage pool water level is required to be ≥ 23 ft over the top of irradiated fuel assemblies seated in the storage racks. The specified water level preserves the assumptions of the fuel handling accident analysis (Ref. 3). As such, it is the minimum required for fuel storage and movement within the fuel storage pool.

BASES

APPLICABILITY

This LCO applies during movement of irradiated fuel assemblies in the fuel storage pool, since the potential for a release of fission products exists.

ACTIONS

A.1

Required Action A.1 is modified by a Note indicating that LCO 3.0.3 does not apply.

When the initial conditions for prevention of an accident cannot be met, steps should be taken to preclude the accident from occurring. When the fuel storage pool water level is lower than the required level, the movement of irradiated fuel assemblies in the fuel storage pool is immediately suspended to a safe position. This action effectively precludes the occurrence of a fuel handling accident. This does not preclude movement of a fuel assembly to a safe position.

If moving irradiated fuel assemblies while in MODE 5 or 6, LCO 3.0.3 would not specify any action. If moving irradiated fuel assemblies while in MODES 1, 2, 3, and 4, the fuel movement is independent of reactor operations. Therefore, inability to suspend movement of irradiated fuel assemblies is not sufficient reason to require a reactor shutdown.

SURVEILLANCE REQUIREMENTS

SR 3.7.10.1

This SR verifies sufficient fuel storage pool water is available in the event of a fuel handling accident. The water level in the fuel storage pool must be checked periodically. The 7 day Frequency is appropriate because the volume in the pool is normally stable. Water level changes are controlled by plant procedures and are acceptable based on operating experience.

During refueling operations, the level in the fuel storage pool is in equilibrium with the refueling canal, and the level in the refueling cavity is checked daily in accordance with SR 3.9.6.1.

REFERENCES

1. FSAR, Section 9.4.
2. FSAR, Section 9.9.
3. FSAR, Section 14.2.1.
4. Regulatory Guide ~~1.25, Rev. 0~~ 1.183 (Rev. 0).
5. 10 CFR ~~100.11~~ 50.67.

B 3.9 REFUELING OPERATIONS

B 3.9.3 Containment Penetrations

BASES

BACKGROUND

During ~~CORE ALTERATIONS or~~ movement of recently irradiated fuel assemblies, i.e. fuel assemblies that have occupied part of a critical reactor core within the previous 65 hours, within containment, a release of fission product radioactivity within containment will be restricted from escaping to the environment when the LCO requirements are met. In MODES 1, 2, 3, and 4, this is accomplished by maintaining containment OPERABLE as described in LCO 3.6.1, "Containment." In MODE 6, the potential for containment pressurization as a result of an accident is not likely; therefore, requirements to isolate the containment from the outside atmosphere can be less stringent. Since there is no potential for containment pressurization, the Appendix J leakage criteria and tests are not required.

The containment serves to minimize the escape of fission product radioactivity to the environment that may be released from the reactor core following an accident while in shutdown conditions, such that offsite radiation exposures are maintained well within the requirements of ~~10 CFR 100~~ 10 CFR 50.67. Additionally, the containment provides radiation shielding from the fission products that may be present in the containment atmosphere following accident conditions.

The containment equipment hatch, which is part of the containment pressure boundary, provides a means for moving large equipment and components into and out of containment. During ~~CORE ALTERATIONS or~~ movement of recently irradiated fuel assemblies within containment, the equipment hatch must be held in place with all bolts.

The containment air locks, which are also part of the containment pressure boundary, provide a means for personnel access during MODES 1, 2, 3, and 4 unit operation in accordance with LCO 3.6.2, "Containment Air Locks." Each air lock has a door at both ends. The doors are normally interlocked to prevent simultaneous opening when containment OPERABILITY is required. During periods of unit shutdown when containment closure is not required, the door interlock mechanism may be disabled, allowing both doors of an air lock to remain open for extended periods when frequent containment entry is necessary. During ~~CORE ALTERATIONS or~~ movement of recently irradiated fuel assemblies within containment, one airlock door must always remain capable of being closed.

BASES

BACKGROUND (continued)

The requirements for containment purge and exhaust system penetration closure ensure that a release of fission product radioactivity within containment will be restricted to within regulatory limits.

The Containment Purge and Exhaust System includes a 36 inch purge penetration and a 36 inch exhaust penetration. During MODES 1, 2, 3, and 4, the two valves in each of the purge and exhaust penetrations are secured in the closed position. The Containment Purge and Exhaust System is not subject to a Specification in MODE 5.

In MODE 6, large air exchanges are necessary to conduct refueling operations. The 36 inch purge system is used for this purpose, and all four valves are closed by the Containment Purge and Exhaust Isolation Instrumentation.

APPLICABLE SAFETY ANALYSES

During ~~CORE ALTERATIONS or~~ movement of irradiated fuel assemblies within containment, the most severe radiological consequences result from a fuel handling accident involving recently irradiated fuel. The fuel handling accident is a postulated event that involves damage to irradiated fuel (Ref. 1). Fuel handling accidents, analyzed in Reference 2, include dropping a single irradiated fuel assembly and handling tool or a heavy object onto other irradiated fuel assemblies. The requirements of LCO 3.9.6, "Refueling Cavity Water Level," and the minimum decay time of ~~161~~ 65 hours prior to irradiated fuel movement ~~of irradiated fuel~~ without the containment penetration requirements of LCO 3.9.3, ensure that the release of fission product radioactivity subsequent to a fuel handling accident, results in doses that are ~~well~~ within the ~~guideline values specified in 10 CFR 100. Standard Review Plan, Section 15.7.4, Rev. 1 (Ref. 2), defines "well within" 10 CFR 100 to be 25% or less of the 10 CFR 100 values. The acceptance limits for offsite radiation exposure will be 25% of 10 CFR 100 values or the NRC staff approved licensing basis (e.g., a specified fraction of 10 CFR 100 limits)~~ the requirements of 10 CFR 50.67, as provided by the guidance of Reference 4.

Containment penetrations satisfy Criterion 3 of the NRC Policy Statement.

LCO

This LCO limits the consequences of a fuel handling accident involving handling recently irradiated fuel in containment by limiting the potential escape paths for fission product radioactivity released within containment. The LCO requires any Containment Purge and Exhaust System penetration to be closed except for the OPERABLE containment purge and exhaust penetrations. For the OPERABLE

containment purge and exhaust penetrations, this LCO ensures that

BASES

LCO (continued)

these penetrations are isolable by the Containment Purge and Exhaust Isolation System. The OPERABILITY requirements for this LCO ensure that the automatic purge and exhaust valve closure specified in the FSAR can be achieved.

The containment personnel airlock doors may be open during movement of recently irradiated fuel in the containment ~~and during CORE ALTERATIONS~~ provided that one door is capable of being closed in the event of a fuel handling accident. Should a fuel handling accident occur inside containment, one personnel airlock door will be closed following an evacuation of containment.

The allowance to have containment personnel airlocks open during fuel movements~~ and CORE ALTERATIONS~~ of recently irradiated fuel assemblies is based on the Point Beach confirmatory dose calculation of a fuel handling accident. This calculation assumes a ground level release with acceptable radiological consequences. The personnel airlocks are not assumed to be closed during the fuel handling accident, nor are the airlocks assumed to be closed within any amount of time following the fuel handling accident.

APPLICABILITY

The containment penetration requirements are applicable during ~~CORE ALTERATIONS or~~ movement of recently irradiated fuel assemblies within containment because this is when there is a potential for ~~a~~ the limiting fuel handling accident. In MODES 1, 2, 3, and 4, containment penetration requirements are addressed by LCO 3.6.1. In MODES 5 and 6, when ~~CORE ALTERATIONS or~~ movement of recently irradiated fuel assemblies within containment ~~are~~ is not being conducted, the potential for a limiting fuel handling accident does not exist. Therefore, under these conditions no requirements are placed on containment penetration status.

ACTIONS

A.1 and A.2

If the containment equipment hatch, air locks, or any containment Purge and Exhaust System penetration is not in the required status, including the Containment Purge and Exhaust Isolation System not capable of automatic actuation when the purge and exhaust valves are open, the unit must be placed in a condition where the isolation function is not needed. This is accomplished by immediately suspending ~~CORE ALTERATIONS and~~ movement of recently irradiated fuel assemblies within containment. Performance of these actions shall not preclude completion of movement of a component to a safe position.

BASES

SURVEILLANCE REQUIREMENTS

SR 3.9.3.1

This Surveillance demonstrates that each of the containment penetrations required to be in its closed position is in that position. The Surveillance on the open purge and exhaust valves will demonstrate that the valves are not blocked from closing. Also the Surveillance will demonstrate that each valve operator has motive power, which will ensure that each valve is capable of being closed by an OPERABLE automatic containment purge and exhaust isolation signal.

The Surveillance is performed every 7 days during ~~CORE ALTERATIONS or~~ movement of recently irradiated fuel assemblies within containment. The Surveillance interval is selected to be commensurate with the normal duration of time to complete fuel handling operations. A surveillance before the start of refueling operations will provide ~~two or three surveillance verifications~~ assurance that containment penetrations are in their required position during the applicable period for this LCO.

SR 3.9.3.2

This Surveillance demonstrates that each containment purge and exhaust valve actuates to its isolation position on manual initiation or on an actual or simulated high radiation signal. The 18 month Frequency maintains consistency with other similar ESFAS instrumentation and valve testing requirements. SR 3.6.3.5 demonstrates that the isolation time of each valve is in accordance with the Inservice Testing Program requirements. These Surveillances performed during MODE 6 will ensure that the valves are capable of closing after a postulated fuel handling accident to limit a release of fission product radioactivity from the containment.

The SR is modified by a Note stating that this demonstration is not applicable to valves in isolated penetrations. LCO 3.9.3.c.1 provides the option to close penetrations in lieu of requiring automatic isolation capability.

REFERENCES

1. FSAR. Section 14.2.1.

2. NUREG-0800, Section 15.7.4, Rev. 1, July 1981.

3. 10 CFR 50.67.

4. Regulatory Guide 1.183 (Rev. 0).

B 3.9 REFUELING OPERATIONS

B 3.9.6 Refueling Cavity Water Level

BASES

BACKGROUND

The movement of irradiated fuel assemblies or performance of CORE ALTERATIONS, except during latching and unlatching of control rod drive shafts, within containment requires a minimum water level of 23 ft above the top of the reactor vessel flange. During refueling, this maintains sufficient water level in the containment, refueling canal, fuel transfer canal, refueling cavity, and spent fuel pool. Sufficient water is necessary to retain iodine fission product activity in the water in the event of a fuel handling accident (Refs. 1 and 2). Sufficient iodine activity would be retained to limit offsite doses from the accident to ~~< 25% of 10 CFR 100~~ 10 CFR 50.67 limits, as provided by the guidance of Reference ~~3~~1.

APPLICABLE SAFETY ANALYSES

During CORE ALTERATIONS and movement of irradiated fuel assemblies, the water level in the refueling canal and the refueling cavity is an initial condition design parameter in the analysis of a fuel handling accident in containment~~, as postulated by Regulatory Guide 1.25~~ (Ref. 1). A minimum water level of 23 ft ~~(Regulatory Position C.1.c of Ref. 1)~~ allows an overall decontamination factor of ~~100~~ 200 ~~(Regulatory Position C.1.g of Ref. 1)~~ to be used in the accident analysis for iodine. ~~This relates to the assumption that 99% of the total iodine released from the pellet to cladding gap of all the dropped fuel assembly rods is retained by the refueling cavity water. The fuel pellet to cladding gap is assumed to contain 10% of the total fuel rod iodine inventory (Ref. 1).~~ This relates to the assumption that 99.85% of the iodine released from the damaged fuel assembly gaps is elemental and the remainder is organic. Therefore, an overall decontamination factor of 200 is achieved if an elemental decontamination factor of 285 is assumed (Ref. 1).

The fuel handling accident analysis inside containment is described in Reference 2. With a minimum water level of 23 ft and a minimum decay time of ~~161~~ 65 hours prior to fuel handling without the containment penetration requirements of LCO 3.9.3, the analysis and test programs demonstrate that the iodine release due to a postulated fuel handling accident is adequately captured by the water and offsite doses are maintained within allowable limits (Refs~~. 4 and 5~~, 3).

Refueling cavity water level satisfies Criterion 2 of the NRC Policy Statement.

BASES

LCO

A minimum refueling cavity water level of 23 ft above the reactor vessel flange is required to ensure that the radiological consequences of a postulated fuel handling accident inside containment are within acceptable limits, as provided by the guidance of Reference ~~3~~1.

APPLICABILITY

LCO 3.9.6 is applicable during CORE ALTERATIONS, except during latching and unlatching of control rod drive shafts, and when moving irradiated fuel assemblies within containment. The LCO minimizes the possibility of a fuel handling accident in containment that is beyond the assumptions of the safety analysis. If irradiated fuel assemblies are not present in containment, there can be no significant radioactivity release as a result of a postulated fuel handling accident. LCO 3.9.3 provides additional requirements for movement of irradiated fuel assemblies within containment whose decay time is less then 65 hours. Requirements for fuel handling accidents in the spent fuel pool are covered by LCO 3.7.~~15~~10, "Fuel Storage Pool Water Level."

ACTIONS

A.1 and A.2

With a water level of < 23 ft above the top of the reactor vessel flange, all operations involving CORE ALTERATIONS or movement of irradiated fuel assemblies within the containment shall be suspended immediately to ensure that a fuel handling accident cannot occur.

The suspension of CORE ALTERATIONS and fuel movement shall not preclude completion of movement of a component to a safe position.

SURVEILLANCE REQUIREMENTS

SR 3.9.6.1

Verification of a minimum water level of 23 ft above the top of the reactor vessel flange ensures that the design basis for the analysis of the postulated fuel handling accident during refueling operations is met. Water at the required level above the top of the reactor vessel flange limits the consequences of damaged fuel rods that are postulated to result from a fuel handling accident inside containment (Ref. 2).

The Frequency of 24 hours is based on engineering judgment and is considered adequate in view of the large volume of water and the normal procedural controls of valve positions, which make significant unplanned level changes unlikely.

BASES

REFERENCES

1. ~~Regulatory Guide 1.25, March 23, 1972~~Regulatory Guide 1.183.

2. FSAR. Section 14.2.1.

3. ~~NUREG-0800, Section 15.7.4~~10 CFR 50.67.

~~4. 10 CFR 100.10.~~

~~5. Malinowski, D. D., Bell, M. J., Duhn, E., and Locante, J., WCAP-828, Radiological Consequences of a Fuel Handling Accident, December 1971.~~

ATTACHMENT V

REVISED TECHNICAL SPECIFICATION AND BASES CHANGES

FOR

LICENSE AMENDMENT REQUEST 234

SELECTIVE SCOPE IMPLEMENTATION OF ALTERNATE SOURCE TERM FOR

POINT BEACH NUCLEAR PLANT, UNITS 1 AND 2

FUEL HANDLING ACCIDENT ANALYSIS

(incorporating proposed changes)

3.9 REFUELING OPERATIONS

3.9.3 Containment Penetrations

LCO 3.9.3 The containment penetrations shall be in the following status:

a. The equipment hatch closed and held in place with all bolts;

b. One door in each air lock is capable of being closed; and

c. Each Containment Purge and Exhaust System penetration either:

1. closed by a manual or automatic isolation valve, blind flange, or equivalent, or

2. capable of being closed by an OPERABLE Containment Purge and Exhaust Isolation System.

APPLICABILITY: During movement of recently irradiated fuel assemblies within containment.

ACTIONS

CONDITION	REQUIRED ACTION	COMPLETION TIME
A. One or more containment penetrations not in required status.	A.1 Suspend movement of recently irradiated fuel assemblies within containment.	Immediately

SURVEILLANCE REQUIREMENTS

SURVEILLANCE		FREQUENCY
SR 3.9.3.1	Verify each required containment penetration is in the required status.	7 days
SR 3.9.3.2	----------NOTE---------- Not applicable to containment purge and exhaust valve(s) in penetrations closed to comply with LCO 3.9.3.c.1. ---------- Verify each required containment purge and exhaust valve actuates to the isolation position on an actual or simulated actuation signal.	18 months

B 3.7 PLANT SYSTEMS

B 3.7.10 Fuel Storage Pool Water Level

BASES

BACKGROUND

The minimum water level in the fuel storage pool meets the assumptions of iodine decontamination factors following a fuel handling accident. The specified water level shields and minimizes the general area dose when the storage racks are filled to their maximum capacity. The water also provides shielding during the movement of spent fuel.

A general description of the fuel storage pool design is given in the FSAR, Section 9.4 (Ref. 1). A description of the Spent Fuel Pool Cooling and Cleanup System is given in the FSAR, Section 9.9 (Ref. 2). The assumptions of the fuel handling accident are given in the FSAR, Section 14.2.1 (Ref. 3).

APPLICABLE SAFETY ANALYSES

The minimum water level in the fuel storage pool meets the assumptions of the fuel handling accident described in Regulatory Guide 1.183 (Ref. 4). The resultant 2 hour dose per person at the exclusion area boundary is within the 10 CFR 50.67 (Ref. 5) limits.

According to Reference 4, there is 23 ft of water between the top of the damaged fuel bundle and the fuel pool surface during a fuel handling accident. With 23 ft of water and an irradiated fuel decay time of 65 hours or more, the assumptions of Reference 4 can be used directly. In practice, this LCO preserves this assumption for the bulk of the fuel in the storage racks. In the case of a single bundle dropped and lying horizontally on top of the spent fuel racks, however, there may be < 23 ft of water above the top of the fuel bundle and the surface, indicated by the width of the bundle. To offset this small nonconservatism, the analysis assumes that all fuel rods fail, although analysis shows that only the first few rows fail from a hypothetical maximum drop.

The fuel storage pool water level satisfies Criteria 2 and 3 of the NRC Policy.

LCO

The fuel storage pool water level is required to be ≥ 23 ft over the top of irradiated fuel assemblies seated in the storage racks. The specified water level preserves the assumptions of the fuel handling accident analysis (Ref. 3). As such, it is the minimum required for fuel storage and movement within the fuel storage pool.

BASES

APPLICABILITY

This LCO applies during movement of irradiated fuel assemblies in the fuel storage pool, since the potential for a release of fission products exists.

ACTIONS

A.1

Required Action A.1 is modified by a Note indicating that LCO 3.0.3 does not apply.

When the initial conditions for prevention of an accident cannot be met, steps should be taken to preclude the accident from occurring. When the fuel storage pool water level is lower than the required level, the movement of irradiated fuel assemblies in the fuel storage pool is immediately suspended to a safe position. This action effectively precludes the occurrence of a fuel handling accident. This does not preclude movement of a fuel assembly to a safe position.

If moving irradiated fuel assemblies while in MODE 5 or 6, LCO 3.0.3 would not specify any action. If moving irradiated fuel assemblies while in MODES 1, 2, 3, and 4, the fuel movement is independent of reactor operations. Therefore, inability to suspend movement of irradiated fuel assemblies is not sufficient reason to require a reactor shutdown.

SURVEILLANCE REQUIREMENTS

SR 3 7.10.1

This SR verifies sufficient fuel storage pool water is available in the event of a fuel handling accident. The water level in the fuel storage pool must be checked periodically. The 7 day Frequency is appropriate because the volume in the pool is normally stable. Water level changes are controlled by plant procedures and are acceptable based on operating experience.

During refueling operations, the level in the fuel storage pool is in equilibrium with the refueling canal, and the level in the refueling cavity is checked daily in accordance with SR 3.9.6.1.

REFERENCES

1. FSAR, Section 9.4.
2. FSAR, Section 9.9.
3. FSAR, Section 14.2.1.
4. Regulatory Guide 1.183 (Rev. 0).
5. 10 CFR 50.67.

B 3.9 REFUELING OPERATIONS

B 3.9.3 Containment Penetrations

BASES

BACKGROUND

During movement of recently irradiated fuel assemblies, i.e. fuel assemblies that have occupied part of a critical reactor core within the previous 65 hours, within containment, a release of fission product radioactivity within containment will be restricted from escaping to the environment when the LCO requirements are met. In MODES 1, 2, 3, and 4, this is accomplished by maintaining containment OPERABLE as described in LCO 3.6.1, "Containment." In MODE 6, the potential for containment pressurization as a result of an accident is not likely; therefore, requirements to isolate the containment from the outside atmosphere can be less stringent. Since there is no potential for containment pressurization, the Appendix J leakage criteria and tests are not required.

The containment serves to minimize the escape of fission product radioactivity to the environment that may be released from the reactor core following an accident while in shutdown conditions, such that offsite radiation exposures are maintained well within the requirements of 10 CFR 50.67. Additionally, the containment provides radiation shielding from the fission products that may be present in the containment atmosphere following accident conditions.

The containment equipment hatch, which is part of the containment pressure boundary, provides a means for moving large equipment and components into and out of containment. During movement of recently irradiated fuel assemblies within containment, the equipment hatch must be held in place with all bolts.

The containment air locks, which are also part of the containment pressure boundary, provide a means for personnel access during MODES 1, 2, 3, and 4 unit operation in accordance with LCO 3.6.2, "Containment Air Locks." Each air lock has a door at both ends. The doors are normally interlocked to prevent simultaneous opening when containment OPERABILITY is required. During periods of unit shutdown when containment closure is not required, the door interlock mechanism may be disabled, allowing both doors of an air lock to remain open for extended periods when frequent containment entry is necessary. During movement of recently irradiated fuel assemblies within containment, one airlock door must always remain capable of being closed.

BASES

BACKGROUND (continued)

The requirements for containment purge and exhaust system penetration closure ensure that a release of fission product radioactivity within containment will be restricted to within regulatory limits.

The Containment Purge and Exhaust System includes a 36 inch purge penetration and a 36 inch exhaust penetration. During MODES 1, 2, 3, and 4, the two valves in each of the purge and exhaust penetrations are secured in the closed position. The Containment Purge and Exhaust System is not subject to a Specification in MODE 5.

In MODE 6, large air exchanges are necessary to conduct refueling operations. The 36 inch purge system is used for this purpose, and all four valves are closed by the Containment Purge and Exhaust Isolation Instrumentation.

APPLICABLE SAFETY ANALYSES

During movement of irradiated fuel assemblies within containment, the most severe radiological consequences result from a fuel handling accident involving recently irradiated fuel. The fuel handling accident is a postulated event that involves damage to irradiated fuel (Ref. 1). Fuel handling accidents, analyzed in Reference 2, include dropping a single irradiated fuel assembly and handling tool or a heavy object onto other irradiated fuel assemblies. The requirements of LCO 3.9.6, "Refueling Cavity Water Level," and the minimum decay time of 65 hours prior to irradiated fuel movement without the containment penetration requirements of LCO 3.9.3, ensure that the release of fission product radioactivity subsequent to a fuel handling accident, results in doses that are within the requirements of 10 CFR 50.67, as provided by the guidance of Reference 4.

Containment penetrations satisfy Criterion 3 of the NRC Policy Statement.

LCO

This LCO limits the consequences of a fuel handling accident involving handling recently irradiated fuel in containment by limiting the potential escape paths for fission product radioactivity released within containment. The LCO requires any Containment Purge and Exhaust System penetration to be closed except for the OPERABLE containment purge and exhaust penetrations. For the OPERABLE containment purge and exhaust penetrations, this LCO ensures that

BASES

LCO (continued)

these penetrations are isolable by the Containment Purge and Exhaust Isolation System. The OPERABILITY requirements for this LCO ensure that the automatic purge and exhaust valve closure specified in the FSAR can be achieved.

The containment personnel airlock doors may be open during movement of recently irradiated fuel in the containment provided that one door is capable of being closed in the event of a fuel handling accident. Should a fuel handling accident occur inside containment, one personnel airlock door will be closed following an evacuation of containment.

The allowance to have containment personnel airlocks open during fuel movement of recently irradiated fuel assemblies is based on the Point Beach confirmatory dose calculation of a fuel handling accident. This calculation assumes a ground level release with acceptable radiological consequences. The personnel airlocks are not assumed to be closed during the fuel handling accident, nor are the airlocks assumed to be closed within any amount of time following the fuel handling accident.

APPLICABILITY

The containment penetration requirements are applicable during movement of recently irradiated fuel assemblies within containment because this is when there is a potential for the limiting fuel handling accident. In MODES 1, 2, 3, and 4, containment penetration requirements are addressed by LCO 3.6.1. In MODES 5 and 6, when movement of recently irradiated fuel assemblies within containment is not being conducted, the potential for a limiting fuel handling accident does not exist. Therefore, under these conditions no requirements are placed on containment penetration status.

ACTIONS

A.1 and A.2

If the containment equipment hatch, air locks, or any containment Purge and Exhaust System penetration is not in the required status, including the Containment Purge and Exhaust Isolation System not capable of automatic actuation when the purge and exhaust valves are open, the unit must be placed in a condition where the isolation function is not needed. This is accomplished by immediately suspending movement of recently irradiated fuel assemblies within containment. Performance of these actions shall not preclude completion of movement of a component to a safe position.

BASES

SURVEILLANCE REQUIREMENTS

SR 3.9.3.1

This Surveillance demonstrates that each of the containment penetrations required to be in its closed position is in that position. The Surveillance on the open purge and exhaust valves will demonstrate that the valves are not blocked from closing. Also the Surveillance will demonstrate that each valve operator has motive power, which will ensure that each valve is capable of being closed by an OPERABLE automatic containment purge and exhaust isolation signal.

The Surveillance is performed every 7 days during movement of recently irradiated fuel assemblies within containment. The Surveillance interval is selected to be commensurate with the normal duration of time to complete fuel handling operations. A surveillance before the start of refueling operations will provide assurance that containment penetrations are in their required position during the applicable period for this LCO.

SR 3.9.3.2

This Surveillance demonstrates that each containment purge and exhaust valve actuates to its isolation position on manual initiation or on an actual or simulated high radiation signal. The 18 month Frequency maintains consistency with other similar ESFAS instrumentation and valve testing requirements. SR 3.6.3.5 demonstrates that the isolation time of each valve is in accordance with the Inservice Testing Program requirements. These Surveillances performed during MODE 6 will ensure that the valves are capable of closing after a postulated fuel handling accident to limit a release of fission product radioactivity from the containment.

The SR is modified by a Note stating that this demonstration is not applicable to valves in isolated penetrations. LCO 3.9.3.c.1 provides the option to close penetrations in lieu of requiring automatic isolation capability.

REFERENCES

1. FSAR. Section 14.2.1.
2. NUREG-0800, Section 15.7.4, Rev. 1, July 1981.
3. 10 CFR 50.67.
4. Regulatory Guide 1.183 (Rev. 0).

B 3.9 REFUELING OPERATIONS

B 3.9.6 Refueling Cavity Water Level

BASES

BACKGROUND

The movement of irradiated fuel assemblies or performance of CORE ALTERATIONS, except during latching and unlatching of control rod drive shafts, within containment requires a minimum water level of 23 ft above the top of the reactor vessel flange. During refueling, this maintains sufficient water level in the containment, refueling canal, fuel transfer canal, refueling cavity, and spent fuel pool. Sufficient water is necessary to retain iodine fission product activity in the water in the event of a fuel handling accident (Refs. 1 and 2). Sufficient iodine activity would be retained to limit offsite doses from the accident to 10 CFR 50.67 limits, as provided by the guidance of Reference 1.

APPLICABLE SAFETY ANALYSES

During CORE ALTERATIONS and movement of irradiated fuel assemblies, the water level in the refueling canal and the refueling cavity is an initial condition design parameter in the analysis of a fuel handling accident in containment (Ref. 1). A minimum water level of 23 ft allows an overall decontamination factor of 200 to be used in the accident analysis for iodine. This relates to the assumption that 99.85% of the iodine released from the damaged fuel assembly gaps is elemental and the remainder is organic. Therefore, an overall decontamination factor of 200 is achieved if an elemental decontamination factor of 285 is assumed (Ref. 1).

The fuel handling accident analysis inside containment is described in Reference 2. With a minimum water level of 23 ft and a minimum decay time of 65 hours prior to fuel handling without the containment penetration requirements of LCO 3.9.3, the analysis and test programs demonstrate that the iodine release due to a postulated fuel handling accident is adequately captured by the water and offsite doses are maintained within allowable limits (Ref. 3).

Refueling cavity water level satisfies Criterion 2 of the NRC Policy Statement.

BASES

LCO

A minimum refueling cavity water level of 23 ft above the reactor vessel flange is required to ensure that the radiological consequences of a postulated fuel handling accident inside containment are within acceptable limits, as provided by the guidance of Reference 1.

APPLICABILITY

LCO 3.9.6 is applicable during CORE ALTERATIONS, except during latching and unlatching of control rod drive shafts, and when moving irradiated fuel assemblies within containment. The LCO minimizes the possibility of a fuel handling accident in containment that is beyond the assumptions of the safety analysis. If irradiated fuel assemblies are not present in containment, there can be no significant radioactivity release as a result of a postulated fuel handling accident. LCO 3.9.3 provides additional requirements for movement of irradiated fuel assemblies within containment whose decay time is less then 65 hours. Requirements for fuel handling accidents in the spent fuel pool are covered by LCO 3.7.10, "Fuel Storage Pool Water Level."

ACTIONS

A.1 and A.2

With a water level of < 23 ft above the top of the reactor vessel flange, all operations involving CORE ALTERATIONS or movement of irradiated fuel assemblies within the containment shall be suspended immediately to ensure that a fuel handling accident cannot occur.

The suspension of CORE ALTERATIONS and fuel movement shall not preclude completion of movement of a component to a safe position.

SURVEILLANCE REQUIREMENTS

SR 3.9.6.1

Verification of a minimum water level of 23 ft above the top of the reactor vessel flange ensures that the design basis for the analysis of the postulated fuel handling accident during refueling operations is met. Water at the required level above the top of the reactor vessel flange limits the consequences of damaged fuel rods that are postulated to result from a fuel handling accident inside containment (Ref. 2).

The Frequency of 24 hours is based on engineering judgment and is considered adequate in view of the large volume of water and the normal procedural controls of valve positions, which make significant unplanned level changes unlikely.

BASES

REFERENCES

1. Regulatory Guide 1.183.
2. FSAR. Section 14.2.1.
3. 10 CFR 50.67.

ATTACHMENT VI

ADMINISTRATIVE CONTAINMENT BUILDING CLOSURE CONTROLS

DURING FUEL MOVEMENT

FOR

LICENSE AMENDMENT REQUEST 234

SELECTIVE SCOPE IMPLEMENTATION OF ALTERNATE SOURCE TERM FOR

POINT BEACH NUCLEAR PLANT, UNITS 1 AND 2

FUEL HANDLING ACCIDENT ANALYSIS

The following requirements shall be maintained to ensure defense in depth. Closure Controls are in effect whenever the affected containment is open during operations within containment involving movement of non-recently irradiated fuel assemblies, that is previously irradiated fuel that has not occupied a part of a critical reactor core within the previous 65 hours. The definition of an open containment penetration is a penetration that provides direct access from the containment atmosphere to the outside environment.

1. The equipment necessary to implement containment closure shall be appropriately staged prior to maintaining any containment penetration open including airlock doors and the containment equipment hatch.

2. Hoses and cables running through any open penetration, airlock, or equipment hatch shall be configured and tagged to facilitate rapid removal in the event that containment closure is required. The tags shall contain the following information:

   2.1 Directions for de-energizing/isolating the line prior to disconnecting.

   2.2 Where to perform the de-energization or isolation function.

   2.3 Directions for disconnecting the line.

   2.4 The location of any tools required for disconnection.

3. The containment personnel airlock may be open provided the following conditions exist:

   3.1 One door in each airlock is capable of being closed.

   3.2 Hoses and cables running through the airlock shall employ a means to allow safe, quick disconnection or severance.

   3.3 The airlock door is not blocked in such a way that it cannot be expeditiously closed. Protective covers used to protect the seals/airlock doors or devices to keep the door open/supported do not violate this provision.

   3.4 Personnel are designated each shift with the responsibility for expeditious closure of at least one door on the personnel airlock or closure of an appropriate temporary door following containment evacuation.

4. The containment equipment hatch may be open provided the following conditions exist:

   4.1 The containment equipment hatch is capable of being closed or a temporary closure method is available and can be implemented.

   4.2 Hoses and cables running through the equipment hatch shall employ a means to allow safe, quick disconnection or severance.

   4.3 The equipment hatch is not blocked in such a way that it cannot be expeditiously closed. Protective covers used to protect the seals/ equipment hatch or devices to keep the hatch open/flange supported do not violate this provision.

4.4 Necessary tools to install the equipment hatch flange and tighten at least four equipment hatch closure bolts are staged in the area or other methods to close the equipment hatch opening (i.e., restrict air flow out of the containment), such as an air curtain, are fabricated and staged at the work area along with the necessary installation tools.

4.5 Sufficient number of personnel are designated each shift with the responsibility for expeditious closure of the containment equipment hatch following containment evacuation.

5. Other containment penetrations may be open provided the following conditions exist:

5.1 One valve in each open containment penetration is capable of being closed, or

5.2 Other methods to close the open penetrations (i.e., restrict air flow out of the containment) such as a closure cover, shall be fabricated and staged along with the necessary installation tools.

5.3 Personnel are designated each shift with the responsibility for expeditious closure of open penetrations(s) following a fuel handling accident inside containment.

6. If containment closure would be hampered by an outage activity, compensatory actions will be developed.

7. The Containment Purge system, with associated radiation release monitoring, will be available for the release path, whenever movement of irradiated fuel is in progress in the containment building and the equipment hatch is open.

7.1 If for any reason this ventilation requirement cannot be met, movement of fuel assemblies within the containment building shall be discontinued until the flow path(s) can be reestablished, the equipment hatch closed, or a temporary cover is placed over the equipment hatch opening.

ATTACHMENT VII

RESPONSE TO REQUEST FOR ADDITIONAL INFORMATION

FOR

LICENSE AMENDMENT REQUEST 234

SELECTIVE SCOPE IMPLEMENTATION OF ALTERNATE SOURCE TERM FOR

POINT BEACH NUCLEAR PLANT, UNITS 1 AND 2

FUEL HANDLING ACCIDENT ANALYSIS

The following information is provided in response to the Nuclear Regulatory Commission staff's request for additional information (RAI) on NMC's February 28, 2002 License Amendment Request (LAR), as discussed during a telephone conference between NRC and NMC staff on November 18, 2002.

The following questions are from two NRC reviewers; therefore, the response is provided in two parts. The NRC staff's questions are restated below, with the NMC response following.

METEOROLOGICAL

NRC Question 1: Meteorological Measurement Program

Confirm that, overall, the 1997 through 1999 meteorological data used in the assessment are of high quality, representative of long term conditions, and suitable for use in the assessment of atmospheric dispersion to which it was applied. The intent of these questions is to assess the overall quality of the meteorological data as collected and as processed for use in the atmospheric dispersion calculations.

During the period of data collection did the measurement program meet the guidelines of Regulatory Guide 1.23, "Onsite Meteorological Programs"? Was the tower base area on the natural surface (e.g., short natural vegetation) and tower free from obstructions (e.g., trees, structures) and micro-scale influences to ensure that the data were representative of the overall site area? In the case of possible obstructions, were trees, structures, etc., at least 10 times their height away from the meteorological tower? Were calibrations properly performed and systems found to be within guideline specifications? What types of quality assurance audits were performed on the meteorological measurement systems to ensure that data were of high quality and to identify any problems and questionable data and correct problems in a timely manner? What additional checks and at what frequency were the checks performed on data following collection and prior to archival? If deviations occurred, describe the deviations and why the data are still deemed to be adequate. How do the three years of data compare with longer term data? Were the data quantitatively compared with other site historical or regional data? If so, what were the findings?

What additional reviews of the data were performed prior to input into the atmospheric dispersion calculations? Were checks made of the data in ARCON96 format with the raw data to ensure that conversions and reformatting was properly performed and the data were properly input?

Response:

The PBNP Meteorological Monitoring System consists of three towers, two of which are located near shore and a third which is located about 8 miles inland. The towers are separated from nearby obstructions by distances equal to at least 10 times the obstruction height, in order to minimize disturbances in the wind field being measured. All instrument booms extend at least two tower widths from the tower and are oriented into the predominant wind direction. The primary meteorological tower is the southern tower located approximately 850-meters south-southeast of PBNP and about 40 meters inland of the Lake Michigan shoreline. The primary monitoring tower consists of a 45-meter tower instrumented with equipment at the 10- and 45-meter levels. This tower's location is such that it should almost always be in the same

meteorological regime as the plant, with respect to localized lake effects. The data collected by this tower is used in the determination of the atmospheric dispersion factors for both the control room and the offsite locations. Site facilities performs general maintenance of the area, such as grass cutting and trimming.

In order to ensure the accuracy of the monitoring system, the meteorological monitoring instruments are calibrated on an annual schedule. Calibrations were performed annually with no significant problems identified during the period of 1997 – 1999. Routine maintenance of the meteorological monitoring system (e.g., replacement of wind speed/wind direction sensor bearing, replacement of wind vanes and speed cups, and the replacement of the wind direction sensor pot) is typically conducted in conjunction with the annual calibrations and items are replaced as necessary. Proper operation of the monitoring instrumentation is maintained through frequent surveillances. Automatic zero and span checks are actuated daily for short periods of time in order to check the signal conditioning and telemetry circuitry. Operations personnel check the results of each zero and span cycle and compare these values with the acceptable ranges. Field site inspections are performed and recorded at each monitoring site on a bi-monthly basis. An inspection of the physical integrity of each monitoring tower site is conducted, especially noting any evidence of vandalism or forced entry, or weather damage. The visual appearance of sensors and auxiliaries are inspected to ensure that no gross damage has occurred, such as hail damage to the wind speed cups.

Meteorological data review and validation is encompassed in the daily zero-span and status/alarm check conducted by Operations personnel. Bi-monthly site checks, calibrations and routine and emergency maintenance performed by site personnel are elements in assuring data availability. This level of surveillance, servicing, and calibration (1984-1988) has resulted in a data recovery at a level far above the goals (>90%) described in the NRC guidance, Regulatory Guide 1.23; therefore, an independent review of all data is unnecessary.

Data recovery statistics for the PBNP meteorological Monitoring System are no longer being compiled since it is not a requirement or commitment at PBNP. However, all documentation related to the meteorological monitoring system is retained in the plant files for future reference. As discussed in Section 6.3, most of the data in December of 1999 was unavailable due to the replacement of the meteorology data recorders in the control room. While the data recorders were out of service, meteorological data was received from the Kewaunee Nuclear Power Plant, roughly five miles north of Point Beach. Although the Kewaunee data is qualified for use in an emergency scenario/situation, it was deemed not appropriate for developing site-specific accident dispersion factors to be used in a licensing application. Excluding the month of December 1999, data recovery was greater than 90%, meeting the expectations of Regulatory Guide 1.23.

In order to assess the representativeness of the metrological data used to calculate the control room atmospheric dispersion factors, an ARCON96 run was performed based on the input assumptions used to quantify the atmospheric dispersion factors for the Unit 2 release point considered for LOCA for the current licensing basis analysis. Generally speaking, good agreement was found between the results based on 1991-1993 data (supports the current licensing basis LOCA analysis) and the 1997-1999 data (supports the proposed values). This comparison was performed informally prior to contracting the development of qualified values.

Stone and Webster was contracted to calculate atmospheric dispersion factors for various release points. S&W is a qualified vendor, which presented the results in reviewed calculations subject to 10 CFR 50, Appendix B. Upon receipt of the atmospheric dispersion calculations, the calculations were accepted into the Point Beach Calculation database following a review of the major portions of the calculation for consistency with the appropriate standards. Additional release point atmospheric dispersion factors were calculated at PBNP using its Appendix B qualified copy of ARCON96 under the calculation process.

Additionally, NMC engineering personnel conducted an engineering evaluation of the 1997 – 1999 data in order to further substantiate that the general trends of the late 1990s data compare well to those found in the original meteorology program conducted at the site during the late 1960s as well as the data processed in the early 1990s. The evaluation used the 1997-1999 meteorological data set as complied for use by ARCON96 (the ARCONPB.MET file found on the enclosed disk), the 1960s data documented in the PBNP FSAR (Appendix I.4 Tables), and the early 1990s data used to determine the offsite atmospheric dispersion factors that are contained in the current licensing basis accident analyses. The evaluation used the general conclusions provided in the PBNP FSAR Chapter 2.6 and Appendix I.4 as evaluation criteria; however, wind directional frequency and stability class dominance were the main focus.

A wind rose plot of wind sector frequency based on the average hourly observations was created for data collected from 1967 to 1969, 1991-1993, and 1997-1999. See Figure 5 attached to this section for the wind rose plot. Stability class (referred to as class) analysis showed that the 1997-1999 class was dominated by class A (extremely unstable) followed by class D (neutral) and E (more stable than neutral). However, the 1967 – 1969 and 1991 –1993 data indicate classes D and E as prominent. The increase in the number of class A observations in the late 1990s is due to the use of the temperature lapse rate stability class determination method, as recommended by the NRC draft regulatory guide, DG-1111. The previous data sets employed the use of the wind direction standard deviation method, as defined in RG 1.23, to determine stability class for wind speeds greater than 3 mph. For the hourly observations of wind speed less than 3 mph, the temperature lapse rate method was applied. The engineering evaluation was able to show that only about 0.9% of the observations of class A data set were below 3 mph, which is in line with the 1960s and early 1990s data sets (0.6% and 0.8%, respectively). The evaluation was able to conclude that the two 1990s data sets are consistent with and representative of the 1960s data set even within the context of the change in stability class determination methodology used in the analysis of the 1997-1999 data set.

<u>NRC Question 2:</u> Meteorological Data

Provide an electronic copy of the meteorological data used to calculate the control room atmospheric dispersion factors. Data should be provided either in the format specified in Appendix A to Section 2.7, "Meteorology and Air Quality," of NUREG-1555, "Environmental Standard Review Plan," or in the ARCON96 format described in NUREG/CR-6331, "Atmospheric Relative Concentrations in Building Wakes." Data may be provided in compressed form, but a method to decompress the data should be provided. If the ARCON96 format is selected when providing data, the atmospheric stability categorization should be based on the delta-T methodology (converted to °C/100m). Any missing data should be designated by completely filling the field for that parameter with 9s. For wind measurements, information concerning the heights of measurement and units of wind speed (e.g., mph, m/s, knots) should also be provided.

Response:

The meteorological data provided on the enclosed CD-Rom is in the ARCON96 format. This file was complied by Stone and Webster from the PBNP data collected from 1/1/1997 through 12/31/1999. Each line of the file represents the location identifier (e.g., PBNPXXX), day of the year (Julian), hour of the day, lower wind speed (m/sec), lower wind direction, stability class based on temperature difference between the 45- and 10-meter tower levels according to the NRC temperature difference range approach (i.e., °C/100 m), upper wind speed (m/s), and upper wind direction. Missing data are represented by the designation of 9s as directed by NUREG/CR-6331.

NRC Question 3: Control Room Atmospheric Dispersion Factors

Attachment II, Section 5.1, to the February 28, 2002 letter provides information on calculation of the control room atmospheric dispersion factors. Many of the inputs are provided. Is Figure 5.1-1 drawn to scale such that it shows the distances between the release locations and control room intake? Were straight line horizontal distances input into the calculations without considering flow around or over structures? What are the heights of the release and intake locations? Are all directions input into the ARCON96 calculations, including wind direction, based upon true north? Was any stack flow or buoyancy assumed?

If more than one release scenario to the environment could occur for a postulated design basis accident (e.g., due to single failure) were the more limiting atmospheric dispersion factors used in the dose calculations?

Response:

Figure 5.1-1 from LAR 224 is a revised drawing taken from a controlled plant drawing which is drawn to scale. The controlled plant drawing was blown-up from its original size and extraneous information unrelated to the analysis was removed and information such as indication of the release points were added within perspective. Figure 5.1-1 from LAR 224 has been resubmitted as Figure 1 in Section 5.0 of Attachment II. The measurements provide in Figure 5.1-1 of LAR 224 were reviewed and revised as appropriate. For example, the measurement provided for the west-east length of the containment facade was corrected from 126' to 142', likewise the north-south length of the facade was corrected from 132' to 134'. Lastly, the west-east length of the Auxiliary Building, located between the Unit 1 and 2 Containment Facades, was corrected from 200' to 244'. As mentioned early, the release points were added to this drawing. In conjunction with Figure 1 of Attachment II, Bechtel drawing M-142 has been attached to provide additional information and perspective.

The distances from the release points to the control room intake were assumed to be horizontal distances without considering flow around or over structures. The fuel handling accident could occur in either containment or the spent fuel pool building; therefore, the most limiting release point, the Unit 2 purge vent stack, was chosen for the fuel handling accident. Section 5.0 of Attachment II documents the input parameters entered into ARCON96 to calculated this X/Q. Neither stack flow nor buoyancy was assumed in calculation of the release point X/Qs.

All direction input into the ARCON96 calculations are based on true north versus plant north. In addition, wind measurements are made with respect to true north as well. True north is shifted 24° 43' to the east of plant North. During the preparation of this license amendment request, it was discovered that the control atmospheric dispersion factors prepared for the analyses submitted under LAR 224 had not accounted for the plant north deviation to true north. This error has been captured in the PBNP Corrective Action Program. This directional deviation was not intentionally discounted. The drawings gathered to prepare the input decks for the ARCON96 runs did not explicitly show the deviations of plant north from true north. Therefore, it was assumed that the north direction indicated on the drawing was true north. However, on closer look, these drawings in fact stated "Plant North," which should have indicated to us that the siting of the plant is not in perfect alignment with true north. The vendor was contacted to discuss this error and the calculation supplying the atmospheric dispersion factors was revised. As well, the calculation performed by PBNP personnel was updated as well. The offsite atmospheric dispersion factors were reviewed to determine whether this error were present. The offsite dispersion factors were calculated with respect to true north, therefore, revisions to these values was not necessary.

The plant north deviation from true north is great enough to affect the control room atmospheric dispersion factors with varying degree depending on the release point direction in relation to the control room. Specifically for the release points relevant to the FHA, the following changes to the atmospheric dispersion factors is seen when the direction relationship is included:

Release Point	Plant North (sec/m^3)	True North (sec/m^3)	Percent Change
Drumming Area Vent	1.51E-03	1.55E-03	3% Increase
Spent Fuel Pool Deck	2.06E-03	2.06E-03	0% No Change
Unit 2 Purge Stack	5.51E-03	5.65E-03	3% Increase

Note:

- Plant North values are the atmospheric dispersion factors which did not correct for directional deviation.
- True North values are the atmospheric dispersion factors which are correct for directional deviation.

The values in the above table demonstrate, that at least for the release paths associated to the FHA, the change is relatively small but in the positive direction. Therefore, incorporating the directional deviation of plant north to true north increases the dose to the control room. The analysis presented in Attachment II of this amendment request is based on atmospheric dispersion factors that are based on true north.

<u>NRC Question 4:</u> Offsite Atmospheric Dispersion Factors

Attachment II, Section 5.2, of the February 28, 2002 letter notes that the offsite atmospheric dispersion factors are those from the current licensing basis. When were the values approved by the NRC to become part of the licensing basis?

Response:

The offsite atmospheric dispersion factor were submitted as part of TSCR 192, letter from WEPCO to NRC dated 2/13/1997, approved under license amendments 174/178 dated 7/9/1997.

NRC Question 5: Dose Time Interval Labeling in LAR 224 (2/28/2002)

Please confirm that the time spans specified in the provided Tables are correct (e.g., 0 – 2 hours versus 0 – 8 hours).

Response:

Note, NRC question 5 only applies to LAR 224. The Offsite Atmospheric Dispersion Factors for the Low Population Zone provided in Table 3.2-5 of letter dated 2/28/2002 should have been labeled in the following manner:

Low Population Zone Atmospheric Dispersion Factors

0 – 8 hr	3.0E-05
8 – 24 hr	1.6E-05
1 – 4 days	4.2E-06
> 4 days	8.6E-07

These same values were provided in Table 5.2-1 of LAR 224 with the proper time interval labeling. This was a typographic error and not a technical error. The Exclusion Area Boundary atmospheric value given in both Table 3.2-5 and 5.2-1 is the 95th percentile value for the 0 – 2 hr time period and conservatively applied to all other time intervals.

RADIOLOGICAL

NRC Question 1: Is the (license amendment) request a selective implementation of the alternative source term as described in Regulatory Guide 1.183 in pursuant to 10 CFR 50.67?

Response:

This amendment request is a request for selective scope implementation of the alternative source term as described in Regulatory Guide 1.183 pursuant to 10 CFR 50.67.

NRC Question 2: Confirm that Point Beach is not claiming a credit for use of potassium iodide tablets to reduce control operator dose?

Response:

Point Beach is not claiming credit for use of potassium iodide tablets to reduce control operator dose for the fuel handling accident analysis.

NRC Question 3: What are the significant increases in the assumed inleakage value (500 cfm) that can be tolerated while maintaining control room doses within the GDC 19 dose acceptance criteria?

Response:

Although Point Beach is not licensed to the 10 CFR 50, Appendix A GDC 19 criteria, the maximum amount of unfiltered inleakage that could be experienced without exceeding the dose acceptance criterion of 5 rem TEDE is 1675 cfm assuming 4455 cfm filtered intake with no filtered recirculation. This represents over a factor of 3 increase in unfiltered inleakage from the proposed value of 500 cfm and over a factor of 150 increase in unfiltered inleakage from the value assumed in the current licensing basis.

NRC Question 4: Discuss the extensive upgrade/modification to the control room ventilation system that Point Beach has completed?

Response:

Bubble-tight dampers replaced isolation dampers VNCSR-4850, VNCSR-4850B, VNCR-4849E, and VNCOMP-4849D. A new bubble-tight isolation damper, VNCR-6748 was installed in the kitchen/bathroom exhaust duct. In addition, negative pressure portions of the CR ductwork seams outside the Control Room Envelope were hardcasted. Positive pressure portions of the CSR ductwork near negative pressure CR ductwork were also hardcasted. These modifications were made using the allowed outage times, as necessary, as delineated in the PBNP TS. However, modifications to portions of the control room duct work and related dampers could not be performed under the times allowed outage times as defined in PBNP TS; therefore, LAR 221 was submitted and NRC approval received for a one time 30 day allowed outage time for CREFS.

The modifications performed during the 30 day outage are as follows. A bubble-tight damper replaced CV-4849C located in the CR-HVAC equipment room. A section of the existing ductwork was removed along with a section of the filtered outdoor air duct, including the original isolation damper CV-4851C to permit installation of the replacement damper. All replaced ductwork within the control room envelope is seam welded construction with matched flange joints. Replacement access doors within the control room envelope, required to allow regular inspection of the new CV-4849C and the re-installed CV-4851C, is bubble-tight construction. The replacement ductwork and components are supported to meet Seismic II/I criteria.

The new dampers are of the same nominal (free area) size as the original dampers and closes in approximately the same period of time (approximately 60 seconds). The new dampers are designed and manufactured to meet the same air flow, temperature, and pressure conditions as the components they have replaced. As required by the existing system configuration, the new dampers will fail in the conservative position. The electrical and instrument air requirements of the limit switches and actuators is provided from existing sources.

To provide a means by which the flow of unfiltered outdoor air may be balanced to meet system requirements, a new manual, balancing damper was installed at a point just upstream of the new CV-4849C.

Similarly, to allow balancing of the flow of control room recirculation air to the inlet of filter unit F-16, a new manual damper was installed downstream of isolation damper CV-4851B. A new access plate is provided for periodic inspection of the damper. The replacement duct is of the same construction described above and is supported to meet the Seismic II/I criteria.

To provide a clear, interference free space for installation of the new ducts, components, and supports, some of the existing conduit and instrument air lines powering CV-4849C and CV-4851C were removed. New wiring and instrument air lines are provided for the isolation dampers in their post-modification positions.

To minimize unfiltered inleakage into the control room envelope, accessible negative pressure Control Room Ventilation (VNCR) System ductwork in the HVAC mechanical equipment room was hardcasted (i.e., sealed). Due to equipment layout and duct routing/space constraints, portions of the ductwork were sealed internally.

Implementation of these system modifications/upgrades did not change the form, function, or operation of the CR-HVAC System. The control room habitability zone was upgraded by providing the occupants with a greater margin of safety from exposure to the effects of airborne radionuclides during a design basis accident.

NRC Question 5: Describe the plant operating procedure (administrative control) to close open airlock doors/equipment hatch in the event of the postulated fuel handling accident. Are the airlock doors/equipment hatch capable of being closed; are there any cables or hoses crossing the airlock doors/equipment hatch that have quick-disconnects to ensure that the doors are capable of being closed in a timely manner; is a designated individual outside each open airlock to close the door in the event of the postulated FHA (see Note 3 in Regulatory Guide 1.183, Appendix B, page B-3)?

Response:

In case of a Fuel Handling Accident in containment, PBNP abnormal operating procedure AOP-8B directs containment closure to be established per procedure CL-1E, "Containment Closure Checklist." CL-1E may also be initiated by the SEPs (Shutdown Emergency Procedures). The purpose of CL-1E (Unit 1 or 2) is to establish and maintain a list of containment penetrations in a degraded condition when the RCS is <200 °F and TS 3.6.1, "Containment" is not maintained.

NRC Question 6: Table 7.2-1 (page 44 of 74) lists fission product activities in the damaged fuel assembly. Are these activities factored for the fuel having decayed for 65 hours? Has a peaking factor of 1.8 already been applied? Does it meet or is it consistent with Note 11 to Table 3 in Regulatory Guide 1.183, page 14?

Response:

The fission product activities listed in Table 7.2-1 have been decayed for 65 hours. In addition, a maximum radial peaking factor of 1.8 times the core average power has not been applied. The radial peaking factor is applied in the analysis. The core design for PBNP is such that no rod above 54 GWD/MTU exceeds the 6.3 kW/ft limit; therefore, the design is consistent with Note 11 to Table 3 in RG 1.183.
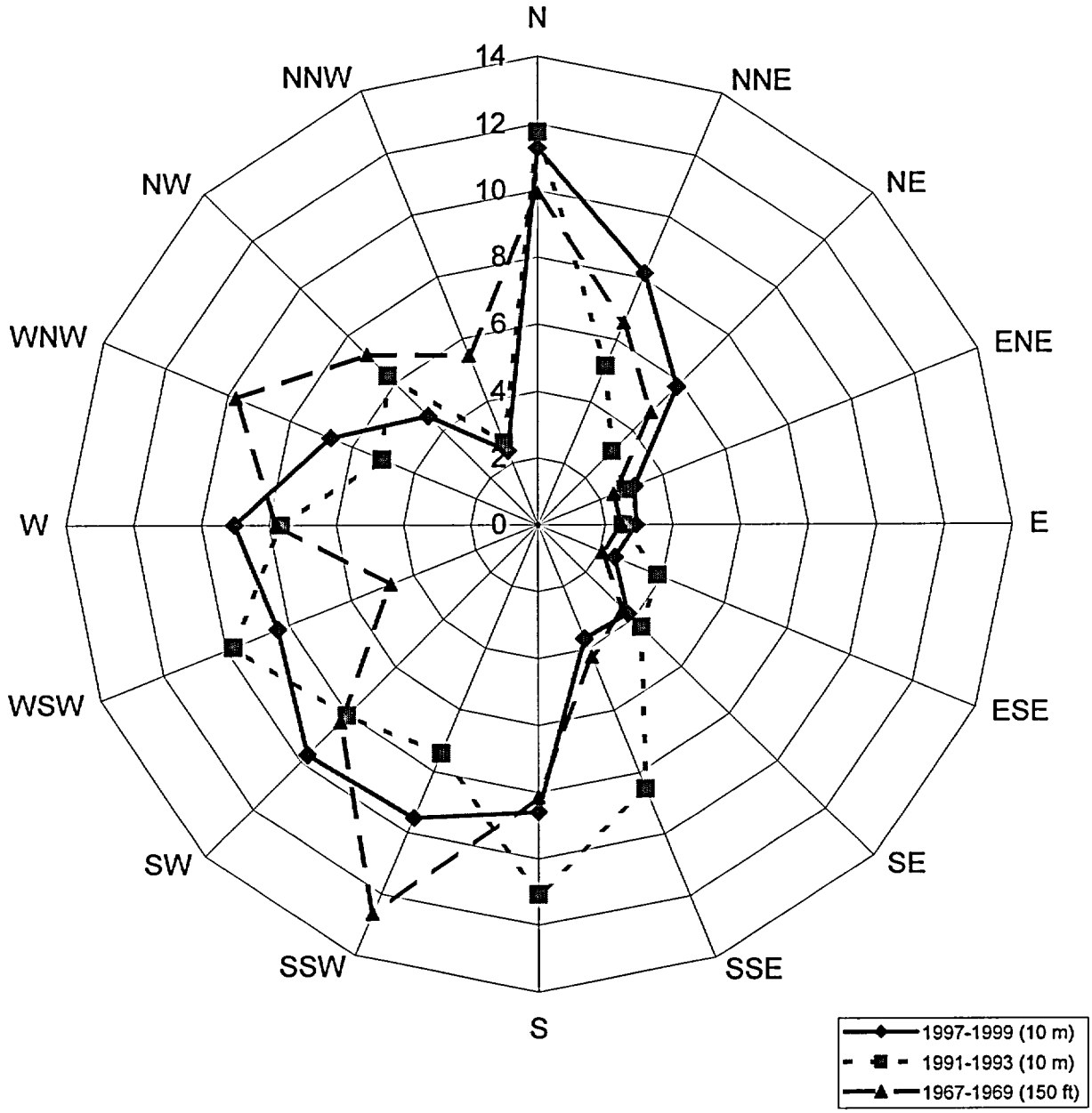
Figure 5: Percentage of Total Number of Hourly Observations for Meteorological Data Collected Years: 1967–1969, 1991–1993, and 1997-1999