NAC INTERNATIONAL

Atlanta Corporate Headquarters
655 Engineering Drive
Norcross, Georgia 30092
770-447-1144
Fax 770-447-1797

SAFETY ANALYSIS REPORT

for the

NAC STORABLE TRANSPORT CASK

CHANGE PAGES

9705050287 970430
PDR ADOCK 07109235
B PDR

ATLANTA WASHINGTON ZURICH TOKYO MOSCOW

Change Control Sheet for Revision 9A

REMOVE EXISTING Page Number	INSERT NEW Page Number
1	1
2	2
3	3
4	4
5	5
6	6
7	7
8	8
9	9
10	10
11	11
12	12
13	13
14	14
15	15
16	16
17	17
18	18
19	19
20	20
21	21
22	22
23	23
24	24
25	25
26	26
27	N/A
iv	iv
vi	vi
ix	ix
x	x
xi	xi
xii	xii
xiii	xiii
1-ii	1-ii
1-iii	1-iii
1.0-1	1.0-1

Change Control Sheet for Revision 9A

REMOVE EXISTING Page Number	INSERT NEW Page Number
1.0-7	1.0-7
1.1-3	1.1-3
1.1-4	1.1-4
1.2-1	1.2-1
1.2-11	1.2-11
N/A	1.2-13a
1.2-14	1.2-14
N/A	1.2-14a
1.2-15	1.2-15
1.2-16	1.2-16
N/A	1.2-16a
1.2-17	1.2-17
N/A	1.2-17a
1.2-18	1.2-18
1.2-19	1.2-19
1.2-20	1.2-20
1.2-21	1.2-21
1.2-22	1.2-22
1.2-23	1.2-23
1.2-24	1.2-24
N/A	1.2-25
2-xxii	2-xxii
2-xxvi	2-xxvi
2-xxvii	2-xxvii
2.1.1-1	2.1.1-1
2.6.5.0-1	2.6.5.0-1
2.6.7.1-2	2.6.7.1-2
2.6.7.1-4	2.6.7.1-4
2.6.7.1-8	2.6.7.1-8
2.6.7.4-13	2.6.7.4-13
2.6.13.4-2	2.6.13.4-2
2.6.14-27	2.6.14-27
2.6.14-28	2.6.14-28
2.6.14-29	2.6.14-29
2.6.16-4	2.6.16-4
2.6.16-5	2.6.16-5
2.7.4.0-1	2.7.4.0-1

Change Control Sheet for Revision 9A

REMOVE EXISTING Page Number	INSERT NEW Page Number
2.7.5-1	2.7.5-1
2.7.6-1	2.7.6-1
2.7.9-12	2.7.9-12
2.7.9-13	2.7.9-13
2.7.9-14	2.7.9-14
2.7.9-15	2.7.9-15
2.7.9-16	2.7.9-16
2.7.9-17	2.7.9-17
2.7.9-18	2.7.9-18
2.7.9-19	2.7.9-19
2.7.9-20	2.7.9-20
2.7.9-21	2.7.9-21
2.7.9-34	2.7.9-34
2.7.9-35	2.7.9-35
2.7.9-42	2.7.9-42
2.7.10-4	2.7.10-4
2.7.10-5	2.7.10-5
2.7.10-6	2.7.10-6
2.7.10-7	2.7.10-7
2.7.10-8	2.7.10-8
2.10.5-7	2.10.5-7
2.10.5-8	2.10.5-8
2.10.5-9	2.10.5-9
2.10.5-16	2.10.5-16
2.10.5-17	2.10.5-17
2.10.5-20	2.10.5-20
2.10.5-21	2.10.5-21
2.10.5-22	2.10.5-22
3.1-1	3.1-1
3.1-5	3.1-5
3.2.19	3.2.19
3.3-3	3.3-3
3.4-10	3.4-10
N/A	3.4-10a
3.4-15	3.4-15
N/A	3.4-15a
N/A	3.4-15b

Change Control Sheet for Revision 9A

REMOVE EXISTING Page Number	INSERT NEW Page Number
3.4-17	3.4-17
3.4-18	3.4-18
3.4-19	3.4-19
3.4-23	3.4-23
3.4-28	3.4-28
N/A	3.4-57a
3.5-1	3.5-1
3.5-2	3.5-2
3.5-3	3.5-3
3.5-6	3.5-6
3.5-7	3.5-7
3.5-9	3.5-9
3.5-10	3.5-10
3.5-11	3.5-11
3.5-12	3.5-12
3.5-13	3.5-13
N/A	3.5-14
4-i	4-i
N/A	4ii
4.1-1	4.1-1
4.1-2	4.1-2
4.1-3	4.1-3
4.1-4	4.1-4
4.2-1	4.2-1
4.2-2	4.2-2
4.2-3	4.2-3
4.2-4	4.2-4
4.2-5	4.2-5
4.2-6	4.2-6
4.2-7	4.2-7
4.2-8	4.2-8
4.2-9	4.2-9
4.2-10	4.2-10
4.2-11	4.2-11
4.2-12	4.2-12
4.2-13	N/A
4.2-14	N/A

Change Control Sheet for Revision 9A

REMOVE EXISTING Page Number	INSERT NEW Page Number
4.2-15	N/A
4.3-1	4.3-1
4.3-2	4.3-2
4.3-3	4.3-3
4.3-4	4.3-4
4.3-5	4.3-5
N/A	4.5-24
N/A	4.5-25
N/A	4.5-26
N/A	4.5-27
N/A	4.5-28
N/A	4.5-29
N/A	4.5-30
N/A	4.5-31
N/A	4.5-32
N/A	4.5-33
5.0-1	5.0-1
N/A	5.0-1a
5.1-2	5.1-2
N/A	5.1-2a
5.1-19	5.1-19
5.1-22	5.1-22
5.1-23	5.1-23
5.4-4	5.4-4
6.1-1	6.1-1
6.1-2	6.1-2
N/A	6.1-2a
6.4-1	6.4-1
6.4-2	6.4-2
N/A	6.4-2a
6.4-4	6.4-4
6.4-5	6.4-5
6.6-45	6.6-45
6.6-46	6.6-46
6.6-47	6.6-47
6.6-48	6.6-48
6.6-49	6.6-49

Change Control Sheet for Revision 9A

REMOVE EXISTING Page Number	INSERT NEW Page Number
6.6-50	6.6-50
6.6-51	6.6-51
6.6-52	6.6-52
6.6-53	6.6-53
6.6-54	6.6-54
6.6-55	6.6-55
6.6-56	6.6-56
6.6-57	6.6-57
6.6-58	6.6-58
6.6-59	6.6-59
6.6-60	6.6-60
6.6-61	6.6-61
6.6-62	6.6-62
6.6-63	6.6-63
6.6-64	6.6-64
6.6-65	6.6-65
6.6-66	6.6-66
6.6-67	6.6-67
6.6-68	6.6-68
6.6-69	6.6-69
6.6-70	6.6-70
6.6-71	6.6-71
6.6-72	6.6-72
6.6-73	6.6-73
6.6-74	6.6-74
6.6-75	6.6-75
6.6-76	6.6-76
6.6-77	6.6-77
6.6-78	6.6-78
6.6-79	6.6-79
6.6-80	6.6-80
6.6-81	6.6-81
6.6-82	6.6-82
6.6-83	6.6-83
6.6-84	6.6-84
6.6-85	6.6-85
6.6-86	6.6-86

Change Control Sheet for Revision 9A

REMOVE EXISTING Page Number	INSERT NEW Page Number
6.6-87	6.6-87
6.6-88	6.6-88
6.6-89	6.6-89
6.6-90	6.6-90
6.6-91	6.6-91
6.6-92	6.6-92
6.6-93	6.6-93
6.6-94	6.6-94
6.6-95	6.6-95
6.6-96	6.6-96
6.6-97	6.6-97
6.6-98	6.6-98
6.6-99	6.6-99
6.6-100	6.6-100
6.6-101	6.6-101
6.6-102	6.6-102
6.6-103	6.6-103
6.6-104	6.6-104
6.6-105	N/A
6.6-106	N/A
6.6-107	N/A
6.6-108	N/A
6.6-109	N/A
6.6-110	N/A
6.6-111	N/A
6.6-112	N/A
6.6-113	N/A
6.6-114	N/A
6.6-115	N/A
6.6-116	N/A
6.6-117	N/A
6.6-118	N/A
6.6-119	N/A
6.6-120	N/A
6.6-121	N/A
6.6-122	N/A
6.6-123	N/A

Change Control Sheet for Revision 9A

REMOVE EXISTING Page Number	INSERT NEW Page Number
6.6-124	N/A
6.6-125	N/A
6.6-126	N/A
6.6-127	N/A
6.6-128	N/A
6.6-129	N/A
6.6-130	N/A
6.6-131	N/A
6.6-132	N/A
6.6-133	N/A
6.6-134	N/A
6.6-135	N/A
6.6-136	N/A
6.6-137	N/A
6.6-138	N/A
6.6-139	N/A
6.6-140	N/A
6.6-141	N/A
6.6-142	N/A
6.6-143	N/A
6.6-144	N/A
6.6-145	N/A
6.6-146	N/A
6.6-147	N/A
6.6-148	N/A
6.6-149	N/A
6.6-150	N/A
6.6-151	N/A
6.6-152	N/A
7-iii	7-iii
7.0-3	7.0-3
7.1-9	7.1-9
7.1-10	7.1-10
7.3-5	7.3-5
7.3-6	7.3-6
N/A	7.7-1
N/A	7.7-2

Change Control Sheet for Revision 9A

REMOVE EXISTING Page Number	INSERT NEW Page Number
N/A	7.7-3
N/A	7.7-4
N/A	7.7-5
8.1-17	8.1-17
8.1-18	8.1-18
9.0-8	9.0-8
9.0-9	9.0-9
N/A	9.0-13

REMOVE EXISTING Drawing Number	REV. #	INSERT NEW Drawing Number	REV. #
455-870	0	455-870	1
455-871	0	455-871	1
455-872	0	455-872	1
455-873	0	455-873	1
455-887	0	455-887	1
455-888	0	455-888	1
455-892	0	455-892	1
455-893	0	455-893	1
455-895	0	455-895	1

This Page Intentionally Left Blank

List of Effective Pages

Chapter 1

1-i ..... Revision 9
1-ii ..... Revision 9A
1-iii ..... Revision 9A
1.0-1 ..... Revision 9A
1.0-2 ..... Revision 9
1.0-3 ..... Revision 9
1.0-4 ..... Revision 9
1.0-5 ..... Revision 9
1.0-6 ..... Revision 9
1.0-7 ..... Revision 9A
1.1-1 ..... Revision 9
1.1-2 ..... Revision 9
1.1-3 ..... Revision 9A
1.1-4 ..... Revision 9A
1.1-5 ..... Revision 9
1.2-1 ..... Revision 9A
1.2-2 ..... Revision 9
1.2-3 ..... Revision 9
1.2-4 ..... Revision 9
1.2-5 ..... Revision 9
1.2-6 ..... Revision 9
1.2-7 ..... Revision 9
1.2-8 ..... Revision 9
1.2-9 ..... Revision 9
1.2-10 ..... Revision 9
1.2-11 ..... Revision 9A
1.2-12 ..... Revision 9
1.2-13 ..... Revision 9
1.2-13a ..... Revision 9A
1.2-14 ..... Revision 9A
1.2-14a ..... Revision 9A
1.2-15 ..... Revision 9A
1.2-16 ..... Revision 9A
1.2-16a ..... Revision 9A
1.2-17 ..... Revision 9A
1.2-17a ..... Revision 9A
1.2-18 ..... Revision 9A
1.2-19 ..... Revision 9A
1.2-20 ..... Revision 9A
1.2-21 ..... Revision 9A
1.2-22 ..... Revision 9A
1.2-23 ..... Revision 9A
1.2-24 ..... Revision 9A
1.2-25 ..... Revision 9A
1.3-1 ..... Revision 9
34 drawings (48 sheets) Revised as shown in Chapter 1 Table of Contents

Chapter 2

2-i ..... Revision 9
2-ii ..... Revision 9
2-iii ..... Revision 9
2-iv ..... Revision 9
2-v ..... Revision 9
2-vi ..... Revision 9
2-vii ..... Revision 9
2-viii ..... Revision 9
2-ix ..... Revision 9
2-x ..... Revision 9
2-xi ..... Revision 9
2-xii ..... Revision 9
2-xiii ..... Revision 9
2-xiv ..... Revision 9
2-xv ..... Revision 9
2-xvi ..... Revision 9
2-xvii ..... Revision 9
2-xviii ..... Revision 9

2-xix ..... Revision 9
2-xx ..... Revision 9
2-xxi ..... Revision 9
2-xxii ..... Revision 9A
2-xxiii ..... Revision 9
2-xxiv ..... Revision 9
2-xxv ..... Revision 9
2-xxvi ..... Revision 9A
2-xxvii ..... Revision 9A
2-xxviii ..... Revision 9
2-xxix ..... Revision 9
2-xxx ..... Revision 9
2-xxxi ..... Revision 9
2-xxxii ..... Revision 9
2-xxxiii ..... Revision 9
2-xxxiv ..... Revision 9
2-xxxv ..... Revision 9
2-xxxvi ..... Revision 9
2-xxxvii ..... Revision 9
2-xxxviii ..... Revision 9
2-xxxiv ..... Revision 9
2-xl ..... Revision 9
2-xli ..... Revision 9
2-xlii ..... Revision 9
2-xliii ..... Revision 9
2-xliv ..... Revision 9
2.0-1 ..... Revision 9
2.1.1-1 ..... Revision 9A
2.1.1-2 ..... Revision 1
2.1.1-3 ..... Revision 1
2.1.1-4 ..... Revision 9
2.1.2-1 ..... Revision 1
2.1.2-2 ..... Revision 9
2.1.2-3 ..... Revision 9
2.1.2-4 ..... Revision 2
2.1.2-5 ..... Revision 2
2.1.3-1 ..... Revision 9
2.1.3-2 ..... Revision 1
2.1.3-3 ..... Revision 2
2.1.3-4 ..... Revision 1
2.1.3-5 ..... Revision 1
2.1.3-6 ..... Revision 2
2.1.3-7 ..... Revision 2
2.1.3-8 ..... Revision 2
2.1.3-9 ..... Revision 2
2.1.3-10 ..... Revision 2
2.1.3-11 ..... Revision 2
2.1.3-12 ..... Revision 2
2.1.3-13 ..... Revision 2
2.1.3-14 ..... Revision 2
2.1.3-15 ..... Revision 2
2.1.3-16 ..... Revision 2
2.1.3-17 ..... Revision 2
2.1.3-18 ..... Revision 2
2.2.0-1 ..... Revision 9
2.2.0-2 ..... Revision 2
2.2.0-3 ..... Revision 9
2.2.0-4 ..... Revision 9
2.3.1-1 ..... Revision 9
2.3.1-2 ..... Revision 9
2.3.2-1 ..... Revision 9
2.3.2-2 ..... Revision 2
2.3.2-3 ..... Revision 2
2.3.2-4 ..... Revision 2
2.3.2-5 ..... Revision 9
2.3.3-1 ..... Revision 2
2.3.3-2 ..... Revision 7
2.3.4-1 ..... Revision 1
2.3.4-2 ..... Revision 2
2.3.4-3 ..... Revision 2
2.3.5-1 ..... Revision 9
2.3.5-2 ..... Revision 2
2.3.6-1 ..... Revision 9
2.3.6-2 ..... Revision 1

2.3.6-3 ..... Revision 1
2.3.6-4 ..... Revision 1
2.3.6-5 ..... Revision 1
2.3.7-1 ..... Revision 9
2.4-1 ..... Revision 9
2.4.1-1 ..... Revision 1
2.4.2-1 ..... Revision 1
2.4.3-1 ..... Revision 1
2.4.4-1 ..... Revision 9
2.4.4-2 ..... Revision 9
2.4.4-3 ..... Revision 9
2.4.4-4 ..... Revision 9
2.4.4-5 ..... Revision 9
2.4.4-6 ..... Revision 9
2.4.4-7 ..... Revision 9
2.4.4-8 ..... Revision 9
2.4.5-1 ..... Revision 1
2.4.6-1 ..... Revision 1
2.5.1-1 ..... Revision 1
2.5.1-2 ..... Revision 2
2.5.1-3 ..... Revision 1
2.5.1-4 ..... Revision 1
2.5.1-5 ..... Revision 1
2.5.1-6 ..... Revision 1
2.5.1-7 ..... Revision 1
2.5.1-8 ..... Revision 1
2.5.1-9 ..... Revision 1
2.5.1-10 ..... Revision 2
2.5.1-11 ..... Revision 1
2.5.1-12 ..... Revision 1
2.5.1-13 ..... Revision 1
2.5.1-14 ..... Revision 1
2.5.1-15 ..... Revision 1
2.5.1-16 ..... Revision 1
2.5.1-17 ..... Revision 1
2.5.1-18 ..... Revision 1
2.5.1-19 ..... Revision 1
2.5.1-20 ..... Revision 1
2.5.1-21 ..... Revision 1
2.5.1-22 ..... Revision 9
2.5.1-23 ..... Revision 9
2.5.1-24 ..... Revision 9
2.5.1-25 ..... Revision 9
2.5.1-26 ..... Revision 9
2.5.1-27 ..... Revision 9
2.5.2-1 ..... Revision 1
2.5.2-2 ..... Revision 1
2.5.2-3 ..... Revision 1
2.5.2-4 ..... Revision 1
2.5.2-5 ..... Revision 1
2.5.2-6 ..... Revision 1
2.5.2-7 ..... Revision 1
2.5.2-8 ..... Revision 1
2.5.2-9 ..... Revision 1
2.5.2-10 ..... Revision 1
2.5.2-11 ..... Revision 1
2.5.2-12 ..... Revision 1
2.5.2-13 ..... Revision 2
2.5.2-14 ..... Revision 2
2.5.2-15 ..... Revision 2
2.5.2-16 ..... Revision 2
2.5.2-17 ..... Revision 2
2.5.2-18 ..... Revision 2
2.5.2-19 ..... Revision 2
2.5.2-20 ..... Revision 2
2.5.2-21 ..... Revision 2
2.5.2-22 ..... Revision 2
2.5.2-23 ..... Revision 2
2.5.2-24 ..... Revision 2
2.5.2-25 ..... Revision 2
2.5.2-26 ..... Revision 2
2.5.2-27 ..... Revision 2
2.5.2-28 ..... Revision 2
2.5.2-29 ..... Revision 2

2.6.0.0-1 ..... Revision 9
2.6.0.0-2 ..... Revision 9
2.6.1.0-1 ..... Revision 1
2.6.1.0-2 ..... Revision 9
2.6.1.0-3 ..... Revision 9
2.6.1.0-4 ..... Revision 9
2.6.1.0-5 ..... Revision 2
2.6.1.0-6 ..... Revision 9
2.6.2.0-1 ..... Revision 9
2.6.2.0-2 ..... Revision 9
2.6.2.0-3 ..... Revision 9
2.6.2.0-4 ..... Revision 9
2.6.2.0-5 ..... Revision 9
2.6.2.0-6 ..... Revision 9
2.6.3.0-1 ..... Revision 9
2.6.4.0-1 ..... Revision 1
2.6.5.0-1 ..... Revision 9A
2.6.5.0-2 ..... Revision 9
2.6.5.0-3 ..... Revision 9
2.6.6.0-1 ..... Revision 1
2.6.7.0-1 ..... Revision 1
2.6.7.1-1 ..... Revision 9
2.6.7.1-2 ..... Revision 9A
2.6.7.1-3 ..... Revision 9
2.6.7.1-4 ..... Revision 9A
2.6.7.1-5 ..... Revision 9
2.6.7.1-6 ..... Revision 9
2.6.7.1-7 ..... Revision 9
2.6.7.1-8 ..... Revision 9A
2.6.7.1-9 ..... Revision 9
2.6.7.2-1 ..... Revision 9
2.6.7.2-2 ..... Revision 9
2.6.7.2-3 ..... Revision 9
2.6.7.2-4 ..... Revision 9
2.6.7.2-5 ..... Revision 9
2.6.7.2-6 ..... Revision 9
2.6.7.2-7 ..... Revision 9
2.6.7.2-8 ..... Revision 9
2.6.7.2-9 ..... Revision 9
2.6.7.2-10 ..... Revision 9
2.6.7.2-11 ..... Revision 9
2.6.7.2-12 ..... Revision 9
2.6.7.2-13 ..... Revision 9
2.6.7.2-14 ..... Revision 9
2.6.7.3-1 ..... Revision 9
2.6.7.3-2 ..... Revision 9
2.6.7.3-3 ..... Revision 9
2.6.7.3-4 ..... Revision 9
2.6.7.3-5 ..... Revision 9
2.6.7.3-6 ..... Revision 9
2.6.7.3-7 ..... Revision 9
2.6.7.3-8 ..... Revision 9
2.6.7.3-9 ..... Revision 9
2.6.7.3-10 ..... Revision 9
2.6.7.3-11 ..... Revision 9
2.6.7.4-1 ..... Revision 9
2.6.7.4-2 ..... Revision 9
2.6.7.4-3 ..... Revision 9
2.6.7.4-4 ..... Revision 9
2.6.7.4-5 ..... Revision 9
2.6.7.4-6 ..... Revision 9
2.6.7.4-7 ..... Revision 9
2.6.7.4-8 ..... Revision 9
2.6.7.4-9 ..... Revision 9
2.6.7.4-10 ..... Revision 9
2.6.7.4-11 ..... Revision 9
2.6.7.4-12 ..... Revision 9
2.6.7.4-13 ..... Revision 9A
2.6.7.4-14 ..... Revision 9
2.6.7.4-15 ..... Revision 9
2.6.7.4-16 ..... Revision 9
2.6.7.4-17 ..... Revision 9
2.6.7.4-18 ..... Revision 9
2.6.7.4-19 ..... Revision 9

2.6.7.4-20 ..... Revision 9
2.6.7.4-21 ..... Revision 9
2.6.7.4-22 ..... Revision 9
2.6.7.4-23 ..... Revision 2
2.6.7.4-24 ..... Revision 2
2.6.7.4-25 ..... Revision 2
2.6.7.4-26 ..... Revision 2
2.6.7.4-27 ..... Revision 2
2.6.7.4-28 ..... Revision 2
2.6.7.4-29 ..... Revision 2
2.6.7.4-30 ..... Revision 2
2.6.7.4-31 ..... Revision 3
2.6.7.4-32 ..... Revision 2
2.6.7.4-33 ..... Revision 2
2.6.7.4-34 ..... Revision 2
2.6.7.4-35 ..... Revision 2
2.6.7.4-36 ..... Revision 2
2.6.7.4-37 ..... Revision 2
2.6.7.4-38 ..... Revision 2
2.6.7.4-39 ..... Revision 2
2.6.7.4-40 ..... Revision 2
2.6.7.5-1 ..... Revision 2
2.6.7.5-2 ..... Revision 9
2.6.7.5-3 ..... Revision 9
2.6.7.5-4 ..... Revision 9
2.6.7.5-5 ..... Revision 9
2.6.7.5-6 ..... Revision 2
2.6.7.5-7 ..... Revision 2
2.6.7.5-8 ..... Revision 2
2.6.7.5-9 ..... Revision 2
2.6.7.5-10 ..... Revision 2
2.6.7.5-11 ..... Revision 2
2.6.7.5-12 ..... Revision 3
2.6.7.5-13 ..... Revision 2
2.6.7.5-14 ..... Revision 3
2.6.7.5-15 ..... Revision 2
2.6.7.5-16 ..... Revision 2
2.6.7.5-17 ..... Revision 3
2.6.7.5-18 ..... Revision 3
2.6.7.6-1 ..... Revision 7
2.6.7.6-2 ..... Revision 1
2.6.7.6-3 ..... Revision 1
2.6.7.6-4 ..... Revision 1
2.6.7.6-5 ..... Revision 1
2.6.7.6-6 ..... Revision 7
2.6.7.6-7 ..... Revision 7
2.6.7.6-8 ..... Revision 7
2.6.7.6-9 ..... Revision 7
2.6.7.6-10 ..... Revision 9
2.6.7.6-11 ..... Revision 7
2.6.7.6-12 ..... Revision 7
2.6.7.6-13 ..... Revision 7
2.6.7.6-14 ..... Revision 7
2.6.7.6-15 ..... Revision 7
2.6.7.6-16 ..... Revision 7
2.6.7.6-17 ..... Revision 7
2.6.7.7-1 ..... Revision 1
2.6.7.7-2 ..... Revision 1
2.6.7.7-3 ..... Revision 1
2.6.7.7-4 ..... Revision 1
2.6.7.7-5 ..... Revision 1
2.6.8.0-1 ..... Revision 1
2.6.9.0-1 ..... Revision 1
2.6.10.0-1 ..... Revision 1
2.6.10.1-1 ..... Revision 1
2.6.10.2-1 ..... Revision 1
2.6.10.2-2 ..... Revision 1
2.6.10.2-3 ..... Revision 1
2.6.10.2-4 ..... Revision 1
2.6.10.3-1 ..... Revision 1
2.6.10.3-2 ..... Revision 2
2.6.10.3-3 ..... Revision 1
2.6.10.3-4 ..... Revision 1
2.6.10.3-5 ..... Revision 1

2.6.10.3-6 ..... Revision 1
2.6.10.3-7 ..... Revision 1
2.6.11.0-1 ..... Revision 2
2.6.11.0-2 ..... Revision 2
2.6.11.1-1 ..... Revision 2
2.6.11.1-2 ..... Revision 2
2.6.11.1-3 ..... Revision 2
2.6.11.1-4 ..... Revision 2
2.6.11.2-1 ..... Revision 2
2.6.11.2-2 ..... Revision 2
2.6.11.2-3 ..... Revision 2
2.6.11.2-4 ..... Revision 2
2.6.11.2-5 ..... Revision 2
2.6.11.2-6 ..... Revision 2
2.6.11.2-7 ..... Revision 2
2.6.11.2-8 ..... Revision 2
2.6.11.2-9 ..... Revision 2
2.6.11.2-10 ..... Revision 2
2.6.11.2-11 ..... Revision 2
2.6.11.2-12 ..... Revision 2
2.6.11.3-1 ..... Revision 2
2.6.12.0-1 ..... Revision 9
2.6.12.0-2 ..... Revision 9
2.6.12.0-3 ..... Revision 9
2.6.12.0-4 ..... Revision 9
2.6.12.0-5 ..... Revision 9
2.6.12.1-1 ..... Revision 9
2.6.12.2-1 ..... Revision 9
2.6.12.2-2 ..... Revision 9
2.6.12.2-3 ..... Revision 9
2.6.12.2-4 ..... Revision 9
2.6.12.2-5 ..... Revision 9
2.6.12.2-6 ..... Revision 9
2.6.12.3-1 ..... Revision 9
2.6.12.3-2 ..... Revision 9
2.6.12.3-3 ..... Revision 9
2.6.12.3-4 ..... Revision 9
2.6.12.3-5 ..... Revision 9
2.6.12.3-6 ..... Revision 9
2.6.12.3-7 ..... Revision 9
2.6.12.4-1 ..... Revision 9
2.6.12.4-2 ..... Revision 9
2.6.12.4-3 ..... Revision 9
2.6.12.5-1 ..... Revision 9
2.6.12.5-2 ..... Revision 9
2.6.12.5-3 ..... Revision 9
2.6.12.6-1 ..... Revision 9
2.6.12.6-2 ..... Revision 9
2.6.12.7-1 ..... Revision 9
2.6.12.7-2 ..... Revision 9
2.6.12.7-3 ..... Revision 9
2.6.12.7-4 ..... Revision 9
2.6.12.7-5 ..... Revision 9
2.6.12.7-6 ..... Revision 9
2.6.12.7-7 ..... Revision 9
2.6.12.7-8 ..... Revision 9
2.6.12.7-9 ..... Revision 9
2.6.12.7-10 ..... Revision 9
2.6.12.7-11 ..... Revision 9
2.6.12.7-12 ..... Revision 9
2.6.12.7-13 ..... Revision 9
2.6.12.7-14 ..... Revision 9
2.6.12.7-15 ..... Revision 9
2.6.12.7-16 ..... Revision 9
2.6.12.7-17 ..... Revision 9
2.6.12.7-18 ..... Revision 9
2.6.12.7-19 ..... Revision 9
2.6.12.7-20 ..... Revision 9
2.6.12.7-21 ..... Revision 9
2.6.12.7-22 ..... Revision 9
2.6.12.8-1 ..... Revision 9
2.6.12.8-2 ..... Revision 2
2.6.12.9-1 ..... Revision 9
2.6.12.9-2 ..... Revision 9

2.6.12.9-3 ..... Revision 9
2.6.12.9-4 ..... Revision 9
2.6.12.9-5 ..... Revision 9
2.6.12.9-6 ..... Revision 9
2.6.12.9-7 ..... Revision 9
2.6.12.9-8 ..... Revision 9
2.6.12.9-9 ..... Revision 9
2.6.12.9-10 ..... Revision 9
2.6.12.9-11 ..... Revision 9
2.6.12.10-1 ..... Revision 9
2.6.12.11-1 ..... Revision 9
2.6.12.12-1 ..... Revision 9
2.6.12.13-1 ..... Revision 9
2.6.12.13-2 ..... Revision 9
2.6.12.13-3 ..... Revision 9
2.6.12.13-4 ..... Revision 9
2.6.13-1 ..... Revision 9
2.6.13-2 ..... Revision 9
2.6.13-3 ..... Revision 9
2.6.13.1-1 ..... Revision 9
2.6.13.2-1 ..... Revision 9A
2.6.13.2-2 ..... Revision 9
2.6.13.2-3 ..... Revision 9
2.6.13.2-4 ..... Revision 9
2.6.13.2-5 ..... Revision 9
2.6.13.2-6 ..... Revision 9
2.6.13.2-7 ..... Revision 9
2.6.13.3-1 ..... Revision 9
2.6.13.3-2 ..... Revision 9
2.6.13.3-3 ..... Revision 9
2.6.13.3-4 ..... Revision 9
2.6.13.4-1 ..... Revision 9
2.6.13.4-2 ..... Revision 9A
2.6.13.4-3 ..... Revision 9
2.6.13.4-4 ..... Revision 9
2.6.13.4-5 ..... Revision 9
2.6.13.5-1 ..... Revision 9
2.6.13.5-2 ..... Revision 9
2.6.13.6-1 ..... Revision 9
2.6.13.6-2 ..... Revision 9
2.6.13.7-1 ..... Revision 9
2.6.13.7-2 ..... Revision 9
2.6.13.8-1 ..... Revision 9
2.6.13.9-1 ..... Revision 9
2.6.13.10-1 ..... Revision 9
2.6.13.11-1 ..... Revision 9
2.6.13.11-2 ..... Revision 9
2.6.14-1 ..... Revision 9
2.6.14-2 ..... Revision 9
2.6.14-3 ..... Revision 9
2.6.14-4 ..... Revision 9
2.6.14-5 ..... Revision 9
2.6.14-6 ..... Revision 9
2.6.14-7 ..... Revision 9
2.6.14-8 ..... Revision 9
2.6.14-9 ..... Revision 9
2.6.14-10 ..... Revision 9
2.6.14-11 ..... Revision 9
2.6.14-12 ..... Revision 9
2.6.14-13 ..... Revision 9
2.6.14-14 ..... Revision 9
2.6.14-15 ..... Revision 9
2.6.14-16 ..... Revision 9
2.6.14-17 ..... Revision 9
2.6.14-18 ..... Revision 9
2.6.14-19 ..... Revision 9
2.6.14-20 ..... Revision 9
2.6.14-21 ..... Revision 9
2.6.14-22 ..... Revision 9
2.6.14-23 ..... Revision 9
2.6.14-24 ..... Revision 9
2.6.14-25 ..... Revision 9
2.6.14-26 ..... Revision 9
2.6.14-27 ..... Revision 9A

2.6.14-28 ..... Revision 9A
2.6.14-29 ..... Revision 9A
2.6.14-30 ..... Revision 9
2.6.14-31 ..... Revision 9
2.6.14-32 ..... Revision 9
2.6.14-33 ..... Revision 9
2.6.14-34 ..... Revision 9
2.6.14-35 ..... Revision 9
2.6.14-36 ..... Revision 9
2.6.14-37 ..... Revision 9
2.6.14-38 ..... Revision 9
2.6.14-39 ..... Revision 9
2.6.14-40 ..... Revision 9
2.6.14-41 ..... Revision 9
2.6.14-42 ..... Revision 9
2.6.14-43 ..... Revision 9
2.6.14-44 ..... Revision 9
2.6.14-45 ..... Revision 9
2.6.14-46 ..... Revision 9
2.6.14-47 ..... Revision 9
2.6.14-48 ..... Revision 9
2.6.14-49 ..... Revision 9
2.6.14-50 ..... Revision 9
2.6.14-51 ..... Revision 9
2.6.14-52 ..... Revision 9
2.6.14-53 ..... Revision 9
2.6.14-54 ..... Revision 9
2.6.14-55 ..... Revision 9
2.6.14-56 ..... Revision 9
2.6.14-57 ..... Revision 9
2.6.14-58 ..... Revision 9
2.6.14-59 ..... Revision 9
2.6.15-1 ..... Revision 9
2.6.15-2 ..... Revision 9
2.6.15-3 ..... Revision 9
2.6.16-1 ..... Revision 9
2.6.16-2 ..... Revision 9
2.6.16-3 ..... Revision 9
2.6.16-4 ..... Revision 9A
2.6.16-5 ..... Revision 9A
2.6.16-6 ..... Revision 9
2.6.16-7 ..... Revision 9
2.6.16-8 ..... Revision 9
2.7-1 ..... Revision 9
2.7-2 ..... Revision 9
2.7.1-1 ..... Revision 9
2.7.1-2 ..... Revision 9
2.7.1.1-1 ..... Revision 9
2.7.1.1-2 ..... Revision 9
2.7.1.1-3 ..... Revision 9
2.7.1.1-4 ..... Revision 9
2.7.1.1-5 ..... Revision 9
2.7.1.1-6 ..... Revision 9
2.7.1.1-7 ..... Revision 9
2.7.1.2-1 ..... Revision 9
2.7.1.2-2 ..... Revision 9
2.7.1.2-3 ..... Revision 9
2.7.1.2-4 ..... Revision 9
2.7.1.2-5 ..... Revision 9
2.7.1.2-6 ..... Revision 1
2.7.1.2-7 ..... Revision 9
2.7.1.2-8 ..... Revision 2
2.7.1.2-9 ..... Revision 9
2.7.1.2-10 ..... Revision 9
2.7.1.3-1 ..... Revision 9
2.7.1.3-2 ..... Revision 9
2.7.1.3-3 ..... Revision 9
2.7.1.3-4 ..... Revision 9
2.7.1.3-5 ..... Revision 9
2.7.1.3-6 ..... Revision 9
2.7.1.3-7 ..... Revision 9
2.7.1.3-8 ..... Revision 9
2.7.1.3-9 ..... Revision 9
2.7.1.4-1 ..... Revision 9

2.7.1.4-2 ..... Revision 1
2.7.1.4-3 ..... Revision 9
2.7.1.4-4 ..... Revision 9
2.7.1.4-5 ..... Revision 9
2.7.1.4-6 ..... Revision 9
2.7.1.4-7 ..... Revision 1
2.7.1.4-8 ..... Revision 1
2.7.1.4-9 ..... Revision 9
2.7.1.4-10 ..... Revision 1
2.7.1.4-11 ..... Revision 9
2.7.1.4-12 ..... Revision 9
2.7.1.5-1 ..... Revision 9
2.7.1.5-2 ..... Revision 9
2.7.1.5-3 ..... Revision 9
2.7.1.6-1 ..... Revision 2
2.7.1.6-2 ..... Revision 2
2.7.1.6-3 ..... Revision 9
2.7.1.6-4 ..... Revision 9
2.7.1.6-5 ..... Revision 9
2.7.1.6-6 ..... Revision 9
2.7.1.6-7 ..... Revision 9
2.7.1.6-8 ..... Revision 9
2.7.1.6-9 ..... Revision 2
2.7.1.6-10 ..... Revision 1
2.7.1.6-11 ..... Revision 1
2.7.1.6-12 ..... Revision 1
2.7.1.6-13 ..... Revision 2
2.7.1.6-14 ..... Revision 2
2.7.1.6-15 ..... Revision 2
2.7.1.6-16 ..... Revision 2
2.7.1.6-17 ..... Revision 3
2.7.1.6-18 ..... Revision 3
2.7.2.0-1 ..... Revision 9
2.7.2.1-1 ..... Revision 1
2.7.2.1-2 ..... Revision 2
2.7.2.1-3 ..... Revision 1
2.7.2.1-4 ..... Revision 1
2.7.2.2-1 ..... Revision 2
2.7.2.2-2 ..... Revision 2
2.7.2.2-3 ..... Revision 1
2.7.2.2-4 ..... Revision 1
2.7.2.2-5 ..... Revision 2
2.7.2.2-6 ..... Revision 1
2.7.2.3-1 ..... Revision 1
2.7.2.3-2 ..... Revision 1
2.7.2.3-3 ..... Revision 1
2.7.2.3-4 ..... Revision 2
2.7.2.3-5 ..... Revision 2
2.7.2.3-6 ..... Revision 1
2.7.2.3-7 ..... Revision 1
2.7.2.4-1 ..... Revision 1
2.7.2.4-2 ..... Revision 1
2.7.2.4-3 ..... Revision 1
2.7.2.4-4 ..... Revision 1
2.7.2.4-5 ..... Revision 1
2.7.2.4-6 ..... Revision 1
2.7.2.4-7 ..... Revision 1
2.7.2.5-1 ..... Revision 1
2.7.2.6-1 ..... Revision 1
2.7.3.1-1 ..... Revision 9
2.7.3.2-1 ..... Revision 9
2.7.3.2-2 ..... Revision 9
2.7.3.2-3 ..... Revision 9
2.7.3.2-4 ..... Revision 9
2.7.3.2-5 ..... Revision 9
2.7.3.2-6 ..... Revision 9
2.7.3.3-1 ..... Revision 1
2.7.3.3-2 ..... Revision 9
2.7.3.3-3 ..... Revision 9
2.7.3.4-1 ..... Revision 1
2.7.3.4-2 ..... Revision 1
2.7.3.5-1 ..... Revision 1
2.7.3.6-1 ..... Revision 1
2.7.4.0-1 ..... Revision 9A

2.7.5-1 ..... Revision 9A
2.7.6-1 ..... Revision 9A
2.7.7.0-1 ..... Revision 9
2.7.7.0-2 ..... Revision 9
2.7.7.0-3 ..... Revision 2
2.7.7.0-4 ..... Revision 1
2.7.8.1 ..... Revision 9
2.7.8-2 ..... Revision 9
2.7.8-3 ..... Revision 9
2.7.8-4 ..... Revision 9
2.7.8.1-1 ..... Revision 9
2.7.8.1-2 ..... Revision 2
2.7.8.1-3 ..... Revision 9
2.7.8.1-4 ..... Revision 2
2.7.8.1-5 ..... Revision 2
2.7.8.1-6 ..... Revision 7
2.7.8.1-7 ..... Revision 2
2.7.8.1-8 ..... Revision 9
2.7.8.1-9 ..... Revision 9
2.7.8.1-10 ..... Revision 2
2.7.8.1-11 ..... Revision 2
2.7.8.1-12 ..... Revision 2
2.7.8.1-13 ..... Revision 2
2.7.8.1-14 ..... Revision 2
2.7.8.1-15 ..... Revision 2
2.7.8.1-16 ..... Revision 2
2.7.8.1-17 ..... Revision 2
2.7.8.1-18 ..... Revision 2
2.7.8.1-19 ..... Revision 2
2.7.8.1-20 ..... Revision 2
2.7.8.1-21 ..... Revision 2
2.7.8.1-22 ..... Revision 2
2.7.8.1-23 ..... Revision 2
2.7.8.1-24 ..... Revision 2
2.7.8.1-25 ..... Revision 2
2.7.8.1-26 ..... Revision 2
2.7.8.1-27 ..... Revision 2
2.7.8.1-28 ..... Revision 2
2.7.8.1-29 ..... Revision 2
2.7.8.1-30 ..... Revision 2
2.7.8.1-31 ..... Revision 2
2.7.8.1-32 ..... Revision 2
2.7.8.1-33 ..... Revision 2
2.7.8.1-34 ..... Revision 2
2.7.8.1-35 ..... Revision 2
2.7.8.1-36 ..... Revision 2
2.7.8.1-37 ..... Revision 2
2.7.8.1-38 ..... Revision 2
2.7.8.1-39 ..... Revision 2
2.7.8.1-40 ..... Revision 2
2.7.8.1-41 ..... Revision 2
2.7.8.1-42 ..... Revision 2
2.7.8.1-43 ..... Revision 2
2.7.8.2-1 ..... Revision 9
2.7.8.2-2 ..... Revision 2
2.7.8.3-1 ..... Revision 2
2.7.8.3-2 ..... Revision 2
2.7.8.3-3 ..... Revision 2
2.7.8.3-4 ..... Revision 2
2.7.8.3-5 ..... Revision 2
2.7.8.3-6 ..... Revision 2
2.7.8.3-7 ..... Revision 9
2.7.8.3-8 ..... Revision 9
2.7.8.3-9 ..... Revision 9
2.7.8.3-10 ..... Revision 2
2.7.8.3-11 ..... Revision 2
2.7.8.3-12 ..... Revision 2
2.7.8.3-13 ..... Revision 2
2.7.8.4-1 ..... Revision 2
2.7.8.4-2 ..... Revision 5
2.7.8.4-3 ..... Revision 5
2.7.8.4-4 ..... Revision 5
2.7.8.4-5 ..... Revision 5
2.7.8.4-6 ..... Revision 5

2.7.8.4-7 ..... Revision 5
2.7.8.4-8 ..... Revision 5
2.7.8.4-9 ..... Revision 5
2.7.8.4-10 ..... Revision 5
2.7.8.5-1 ..... Revision 3
2.7.9-1 ..... Revision 9
2.7.9-2 ..... Revision 9
2.7.9-3 ..... Revision 9
2.7.9-4 ..... Revision 9
2.7.9-5 ..... Revision 9
2.7.9-6 ..... Revision 9
2.7.9-7 ..... Revision 9
2.7.9-8 ..... Revision 9
2.7.9-9 ..... Revision 9
2.7.9-10 ..... Revision 9
2.7.9-11 ..... Revision 9
2.7.9-12 ..... Revision 9A
2.7.9-13 ..... Revision 9A
2.7.9-14 ..... Revision 9A
2.7.9-15 ..... Revision 9A
2.7.9-16 ..... Revision 9A
2.7.9-17 ..... Revision 9A
2.7.9-18 ..... Revision 9A
2.7.9-19 ..... Revision 9A
2.7.9-20 ..... Revision 9A
2.7.9-21 ..... Revision 9A
2.7.9-22 ..... Revision 9
2.7.9-23 ..... Revision 9
2.7.9-24 ..... Revision 9
2.7.9-25 ..... Revision 9
2.7.9-26 ..... Revision 9
2.7.9-27 ..... Revision 9
2.7.9-28 ..... Revision 9
2.7.9-29 ..... Revision 9
2.7.9-30 ..... Revision 9
2.7.9-31 ..... Revision 9
2.7.9-32 ..... Revision 9
2.7.9-33 ..... Revision 9
2.7.9-34 ..... Revision 9A
2.7.9-35 ..... Revision 9A
2.7.9-36 ..... Revision 9
2.7.9-37 ..... Revision 9
2.7.9-38 ..... Revision 9
2.7.9-39 ..... Revision 9
2.7.9-40 ..... Revision 9
2.7.9-41 ..... Revision 9
2.7.9-42 ..... Revision 9A
2.7.9-43 ..... Revision 9
2.7.9-44 ..... Revision 9
2.7.10-1 ..... Revision 9
2.7.10-2 ..... Revision 9
2.7.10-3 ..... Revision 9
2.7.10-4 ..... Revision 9A
2.7.10-5 ..... Revision 9A
2.7.10-6 ..... Revision 9A
2.7.10-7 ..... Revision 9A
2.7.10-8 ..... Revision 9A
2.7.10-9 ..... Revision 9
2.7.11-1 ..... Revision 9
2.7.11-2 ..... Revision 9
2.7.11-3 ..... Revision 9
2.7.11-4 ..... Revision 9
2.7.11-5 ..... Revision 9
2.7.11-6 ..... Revision 9
2.7.11-7 ..... Revision 9
2.7.11-8 ..... Revision 9
2.7.11-9 ..... Revision 9
2.8.0-1 ..... Revision 1
2.9.0-1 ..... Revision 9
2.10.1-1 ..... Revision 1
2.10.1-2 ..... Revision 1
2.10.1-3 ..... Revision 1
2.10.2-1 ..... Revision 1
2.10.2-2 ..... Revision 1

2.10.2-3 ..... Revision 1
2.10.2-4 ..... Revision 2
2.10.2-5 ..... Revision 9
2.10.2-6 ..... Revision 1
2.10.2-7 ..... Revision 1
2.10.2-8 ..... Revision 1
2.10.2-9 ..... Revision 1
2.10.2-10 ..... Revision 1
2.10.2-11 ..... Revision 1
2.10.2-12 ..... Revision 9
2.10.2-13 ..... Revision 9
2.10.2-14 ..... Revision 9
2.10.2-15 ..... Revision 9
2.10.2-16 ..... Revision 9
2.10.2-17 ..... Revision 9
2.10.2-18 ..... Revision 9
2.10.2-19 ..... Revision 9
2.10.2-20 ..... Revision 9
2.10.2-21 ..... Revision 9
2.10.2-22 ..... Revision 9
2.10.2-23 ..... Revision 9
2.10.2-24 ..... Revision 9
2.10.2-25 ..... Revision 9
2.10.2-26 ..... Revision 9
2.10.2-27 ..... Revision 9
2.10.2-28 ..... Revision 9
2.10.2-29 ..... Revision 1
2.10.2-30 ..... Revision 1
2.10.2-31 ..... Revision 1
2.10.2-32 ..... Revision 2
2.10.2-33 ..... Revision 1
2.10.2-34 ..... Revision 1
2.10.2-35 ..... Revision 1
2.10.2-36 ..... Revision 1
2.10.2-37 ..... Revision 1
2.10.2-38 ..... Revision 1
2.10.2-39 ..... Revision 1
2.10.2-40 ..... Revision 1
2.10.2-41 ..... Revision 1
2.10.2-42 ..... Revision 1
2.10.2-43 ..... Revision 1
2.10.2-44 ..... Revision 1
2.10.2-45 ..... Revision 1
2.10.2-46 ..... Revision 1
2.10.2-47 ..... Revision 1
2.10.2-48 ..... Revision 1
2.10.2-49 ..... Revision 1
2.10.2-50 ..... Revision 1
2.10.2-51 ..... Revision 1
2.10.2-52 ..... Revision 1
2.10.2-53 ..... Revision 1
2.10.2-54 ..... Revision 1
2.10.2-55 ..... Revision 1
2.10.2-56 ..... Revision 1
2.10.2-57 ..... Revision 1
2.10.2-58 ..... Revision 1
2.10.2-59 ..... Revision 1
2.10.2-60 ..... Revision 1
2.10.2-61 ..... Revision 1
2.10.2-62 ..... Revision 1
2.10.2-63 ..... Revision 1
2.10.2-64 ..... Revision 1
2.10.2-65 ..... Revision 1
2.10.2-66 ..... Revision 1
2.10.2-67 ..... Revision 1
2.10.2-68 ..... Revision 1
2.10.2-69 ..... Revision 1
2.10.2-70 ..... Revision 1
2.10.2-71 ..... Revision 1
2.10.2-72 ..... Revision 1
2.10.2-73 ..... Revision 1
2.10.2-74 ..... Revision 1
2.10.2-75 ..... Revision 1
2.10.2-76 ..... Revision 2

2.10.2-77 ..... Revision 1
2.10.2-78 ..... Revision 1
2.10.2-79 ..... Revision 1
2.10.2-80 ..... Revision 1
2.10.2-81 ..... Revision 1
2.10.2-82 ..... Revision 1
2.10.2-83 ..... Revision 1
2.10.2-84 ..... Revision 1
2.10.2-85 ..... Revision 1
2.10.2-86 ..... Revision 1
2.10.2-87 ..... Revision 1
2.10.2-88 ..... Revision 1
2.10.2-89 ..... Revision 1
2.10.2-90 ..... Revision 1
2.10.2-91 ..... Revision 1
2.10.2-92 ..... Revision 1
2.10.2-93 ..... Revision 1
2.10.2-94 ..... Revision 1
2.10.3-1 ..... Revision 1
2.10.4-1 ..... Revision 9
2.10.4-2 ..... Revision 1
2.10.4-3 ..... Revision 1
2.10.4-4 ..... Revision 1
2.10.4-5 ..... Revision 1
2.10.4-6 ..... Revision 1
2.10.4-7 ..... Revision 1
2.10.4-8 ..... Revision 1
2.10.4-9 ..... Revision 1
2.10.4-10 ..... Revision 1
2.10.4-11 ..... Revision 1
2.10.4-12 ..... Revision 1
2.10.4-13 ..... Revision 1
2.10.4-14 ..... Revision 1
2.10.4-15 ..... Revision 1
2.10.4-16 ..... Revision 1
2.10.4-17 ..... Revision 1
2.10.4-18 ..... Revision 1
2.10.4-19 ..... Revision 1
2.10.4-20 ..... Revision 1
2.10.4-21 ..... Revision 1
2.10.4-22 ..... Revision 1
2.10.4-23 ..... Revision 1
2.10.4-24 ..... Revision 1
2.10.4-25 ..... Revision 1
2.10.4-26 ..... Revision 1
2.10.4-27 ..... Revision 1
2.10.4-28 ..... Revision 1
2.10.4-29 ..... Revision 1
2.10.4-30 ..... Revision 1
2.10.4-31 ..... Revision 1
2.10.4-32 ..... Revision 1
2.10.4-33 ..... Revision 1
2.10.4-34 ..... Revision 1
2.10.4-35 ..... Revision 1
2.10.4-36 ..... Revision 1
2.10.4-37 ..... Revision 1
2.10.4-38 ..... Revision 1
2.10.4-39 ..... Revision 1
2.10.4-40 ..... Revision 1
2.10.4-41 ..... Revision 1
2.10.4-42 ..... Revision 1
2.10.4-43 ..... Revision 1
2.10.4-44 ..... Revision 1
2.10.4-45 ..... Revision 1
2.10.4-46 ..... Revision 1
2.10.4-47 ..... Revision 1
2.10.4-48 ..... Revision 1
2.10.4-49 ..... Revision 1
2.10.4-50 ..... Revision 1
2.10.4-51 ..... Revision 1
2.10.4-52 ..... Revision 1
2.10.4-53 ..... Revision 1
2.10.4-54 ..... Revision 1
2.10.4-55 ..... Revision 1

2.10.4-56 ..... Revision 1
2.10.4-57 ..... Revision 1
2.10.4-58 ..... Revision 1
2.10.4-59 ..... Revision 1
2.10.4-60 ..... Revision 1
2.10.4-61 ..... Revision 1
2.10.4-62 ..... Revision 1
2.10.4-63 ..... Revision 1
2.10.4-64 ..... Revision 1
2.10.4-65 ..... Revision 1
2.10.4-66 ..... Revision 1
2.10.4-67 ..... Revision 1
2.10.4-68 ..... Revision 1
2.10.4-69 ..... Revision 1
2.10.4-70 ..... Revision 1
2.10.4-71 ..... Revision 1
2.10.4-72 ..... Revision 1
2.10.4-73 ..... Revision 1
2.10.4-74 ..... Revision 1
2.10.4-75 ..... Revision 1
2.10.4-76 ..... Revision 1
2.10.4-77 ..... Revision 1
2.10.4-78 ..... Revision 1
2.10.4-79 ..... Revision 1
2.10.4-80 ..... Revision 1
2.10.4-81 ..... Revision 1
2.10.4-82 ..... Revision 1
2.10.4-83 ..... Revision 1
2.10.4-84 ..... Revision 1
2.10.4-85 ..... Revision 2
2.10.4-86 ..... Revision 2
2.10.4-87 ..... Revision 2
2.10.4-88 ..... Revision 1
2.10.4-89 ..... Revision 1
2.10.4-90 ..... Revision 1
2.10.4-91 ..... Revision 1
2.10.4-92 ..... Revision 1
2.10.4-93 ..... Revision 1
2.10.4-94 ..... Revision 1
2.10.4-95 ..... Revision 1
2.10.4-96 ..... Revision 1
2.10.4-97 ..... Revision 2
2.10.4-98 ..... Revision 2
2.10.4-99 ..... Revision 2
2.10.4-100 ..... Revision 1
2.10.4-101 ..... Revision 1
2.10.4-102 ..... Revision 1
2.10.4-103 ..... Revision 1
2.10.4-104 ..... Revision 1
2.10.4-105 ..... Revision 1
2.10.4-106 ..... Revision 1
2.10.4-107 ..... Revision 1
2.10.4-108 ..... Revision 1
2.10.4-109 ..... Revision 1
2.10.4-110 ..... Revision 1
2.10.4-111 ..... Revision 2
2.10.4-112 ..... Revision 2
2.10.4-113 ..... Revision 2
2.10.4-114 ..... Revision 2
2.10.4-115 ..... Revision 2
2.10.4-116 ..... Revision 2
2.10.4-117 ..... Revision 2
2.10.4-118 ..... Revision 2
2.10.4-119 ..... Revision 2
2.10.4-120 ..... Revision 1
2.10.4-121 ..... Revision 1
2.10.4-122 ..... Revision 1
2.10.4-123 ..... Revision 1
2.10.4-124 ..... Revision 1
2.10.4-125 ..... Revision 1
2.10.4-126 ..... Revision 1
2.10.4-127 ..... Revision 1
2.10.4-128 ..... Revision 1
2.10.4-129 ..... Revision 1

2.10.4-130 ..... Revision 1
2.10.4-131 ..... Revision 2
2.10.4-132 ..... Revision 2
2.10.4-133 ..... Revision 2
2.10.4-134 ..... Revision 2
2.10.4-135 ..... Revision 2
2.10.4-136 ..... Revision 2
2.10.4-137 ..... Revision 2
2.10.4-138 ..... Revision 2
2.10.4-139 ..... Revision 2
2.10.4-140 ..... Revision 1
2.10.4-141 ..... Revision 1
2.10.4-142 ..... Revision 2
2.10.4-143 ..... Revision 1
2.10.4-144 ..... Revision 1
2.10.4-145 ..... Revision 1
2.10.4-146 ..... Revision 1
2.10.4-147 ..... Revision 1
2.10.4-148 ..... Revision 1
2.10.4-149 ..... Revision 2
2.10.4-150 ..... Revision 2
2.10.4-151 ..... Revision 2
2.10.4-152 ..... Revision 1
2.10.4-153 ..... Revision 1
2.10.4-154 ..... Revision 1
2.10.4-155 ..... Revision 1
2.10.4-156 ..... Revision 1
2.10.4-157 ..... Revision 1
2.10.4-158 ..... Revision 1
2.10.4-159 ..... Revision 1
2.10.4-160 ..... Revision 1
2.10.4-161 ..... Revision 1
2.10.4-162 ..... Revision 1
2.10.4-163 ..... Revision 1
2.10.4-164 ..... Revision 1
2.10.4-165 ..... Revision 1
2.10.4-166 ..... Revision 1
2.10.4-167 ..... Revision 1
2.10.4-168 ..... Revision 1
2.10.4-169 ..... Revision 1
2.10.4-170 ..... Revision 1
2.10.4-171 ..... Revision 1
2.10.4-172 ..... Revision 2
2.10.4-173 ..... Revision 2
2.10.4-174 ..... Revision 2
2.10.4-175 ..... Revision 1
2.10.4-176 ..... Revision 1
2.10.4-177 ..... Revision 1
2.10.4-178 ..... Revision 1
2.10.4-179 ..... Revision 1
2.10.4-180 ..... Revision 1
2.10.4-181 ..... Revision 1
2.10.4-182 ..... Revision 1
2.10.4-183 ..... Revision 1
2.10.4-184 ..... Revision 1
2.10.4-185 ..... Revision 1
2.10.4-186 ..... Revision 1
2.10.4-187 ..... Revision 1
2.10.4-188 ..... Revision 1
2.10.4-189 ..... Revision 1
2.10.4-190 ..... Revision 2
2.10.4-191 ..... Revision 2
2.10.4-192 ..... Revision 2
2.10.4-193 ..... Revision 1
2.10.4-194 ..... Revision 1
2.10.4-195 ..... Revision 1
2.10.4-196 ..... Revision 1
2.10.4-197 ..... Revision 1
2.10.4-198 ..... Revision 1
2.10.4-199 ..... Revision 1
2.10.4-200 ..... Revision 1
2.10.4-201 ..... Revision 1
2.10.4-202 ..... Revision 1
2.10.4-203 ..... Revision 1

2.10.4-204 ..... Revision 1
2.10.4-205 ..... Revision 2
2.10.4-206 ..... Revision 2
2.10.4-207 ..... Revision 2
2.10.4-208 ..... Revision 2
2.10.4-209 ..... Revision 2
2.10.4-210 ..... Revision 2
2.10.4-211 ..... Revision 1
2.10.4-212 ..... Revision 1
2.10.4-213 ..... Revision 1
2.10.4-214 ..... Revision 1
2.10.4-215 ..... Revision 1
2.10.4-216 ..... Revision 1
2.10.4-217 ..... Revision 2
2.10.4-218 ..... Revision 2
2.10.4-219 ..... Revision 2
2.10.4-220 ..... Revision 2
2.10.4-221 ..... Revision 2
2.10.4-222 ..... Revision 2
2.10.4-223 ..... Revision 1
2.10.4-224 ..... Revision 1
2.10.4-225 ..... Revision 1
2.10.4-226 ..... Revision 1
2.10.4-227 ..... Revision 1
2.10.4-228 ..... Revision 2
2.10.4-229 ..... Revision 2
2.10.4-230 ..... Revision 1
2.10.4-231 ..... Revision 1
2.10.4-232 ..... Revision 1
2.10.4-233 ..... Revision 1
2.10.4-234 ..... Revision 1
2.10.4-235 ..... Revision 1
2.10.4-236 ..... Revision 1
2.10.4-237 ..... Revision 1
2.10.4-238 ..... Revision 1
2.10.4-239 ..... Revision 1
2.10.4-240 ..... Revision 1
2.10.4-241 ..... Revision 2
2.10.4-242 ..... Revision 2
2.10.4-243 ..... Revision 1
2.10.4-244 ..... Revision 1
2.10.4-245 ..... Revision 1
2.10.4-246 ..... Revision 1
2.10.4-247 ..... Revision 1
2.10.4-248 ..... Revision 1
2.10.4-249 ..... Revision 1
2.10.4-250 ..... Revision 1
2.10.4-251 ..... Revision 1
2.10.4-252 ..... Revision 1
2.10.4-253 ..... Revision 1
2.10.4-254 ..... Revision 2
2.10.4-255 ..... Revision 2
2.10.4-256 ..... Revision 1
2.10.4-257 ..... Revision 1
2.10.4-258 ..... Revision 1
2.10.4-259 ..... Revision 1
2.10.4-260 ..... Revision 1
2.10.4-261 ..... Revision 2
2.10.4-262 ..... Revision 1
2.10.4-263 ..... Revision 1
2.10.4-264 ..... Revision 1
2.10.4-265 ..... Revision 1
2.10.4-266 ..... Revision 1
2.10.4-267 ..... Revision 2
2.10.4-268 ..... Revision 2
2.10.4-269 ..... Revision 1
2.10.4-270 ..... Revision 1
2.10.4-271 ..... Revision 1
2.10.4-272 ..... Revision 1
2.10.4-273 ..... Revision 1
2.10.4-274 ..... Revision 2
2.10.4-275 ..... Revision 2
2.10.4-276 ..... Revision 1
2.10.4-277 ..... Revision 1

2.10.4-278 ..... Revision 1
2.10.4-279 ..... Revision 1
2.10.4-280 ..... Revision 1
2.10.4-281 ..... Revision 2
2.10.4-282 ..... Revision 2
2.10.4-283 ..... Revision 1
2.10.4-284 ..... Revision 1
2.10.4-285 ..... Revision 1
2.10.4-286 ..... Revision 1
2.10.4-287 ..... Revision 1
2.10.4-288 ..... Revision 1
2.10.5-1 ..... Revision 9
2.10.5-2 ..... Revision 9
2.10.5-3 ..... Revision 1
2.10.5-4 ..... Revision 1
2.10.5-5 ..... Revision 1
2.10.5-6 ..... Revision 1
2.10.5-7 ..... Revision 9A
2.10.5-8 ..... Revision 9A
2.10.5-9 ..... Revision 9A
2.10.5-10 ..... Revision 9
2.10.5-11 ..... Revision 9
2.10.5-12 ..... Revision 9
2.10.5-13 ..... Revision 9
2.10.5-14 ..... Revision 9
2.10.5-15 ..... Revision 9
2.10.5-16 ..... Revision 9A
2.10.5-17 ..... Revision 9A
2.10.5-18 ..... Revision 9
2.10.5-19 ..... Revision 9
2.10.5-20 ..... Revision 9A
2.10.5-21 ..... Revision 9A
2.10.5-22 ..... Revision 9A
2.10.6-1 ..... Revision 9
2.10.6-2 ..... Revision 9
2.10.6-3 ..... Revision 9
2.10.6-4 ..... Revision 2
2.10.6-5 ..... Revision 2
2.10.6-6 ..... Revision 2
2.10.6-7 ..... Revision 2
2.10.6-8 ..... Revision 2
2.10.6-9 ..... Revision 2
2.10.6-10 ..... Revision 2
2.10.6-11 ..... Revision 2
2.10.6-12 ..... Revision 2
2.10.6-13 ..... Revision 2
2.10.6-14 ..... Revision 2
2.10.6-15 ..... Revision 2
2.10.6-16 ..... Revision 2
2.10.6-17 ..... Revision 2
2.10.6-18 ..... Revision 2
2.10.6-19 ..... Revision 2
2.10.6-20 ..... Revision 2
2.10.6-21 ..... Revision 2
2.10.6-22 ..... Revision 2
2.10.6-23 ..... Revision 2
2.10.6-24 ..... Revision 2
2.10.6-25 ..... Revision 2
2.10.6-26 ..... Revision 2
2.10.6-27 ..... Revision 2
2.10.6-28 ..... Revision 2
2.10.6-29 ..... Revision 2
2.10.6-30 ..... Revision 2
2.10.6-31 ..... Revision 2
2.10.6-32 ..... Revision 2
2.10.6-33 ..... Revision 2
2.10.6-34 ..... Revision 2
2.10.6-35 ..... Revision 2
2.10.6-36 ..... Revision 2
2.10.6-37 ..... Revision 2
2.10.6-38 ..... Revision 2
2.10.6-39 ..... Revision 2
2.10.6-40 ..... Revision 2
2.10.6-41 ..... Revision 2

2.10.6-42 ..... Revision 2
13 drawings (16 sheets) Revised as shown in Sections 2.10.6.6 and 2.10.6.7
2.10.6-43 ..... Revision 2
2.10.6-44 ..... Revision 2
2.10.6-45 ..... Revision 2
2.10.6-46 ..... Revision 2
2.10.6-47 ..... Revision 2
2.10.6-48 ..... Revision 2
2.10.6-49 ..... Revision 2
2.10.6-50 ..... Revision 2
2.10.6-51 ..... Revision 2
2.10.6-52 ..... Revision 2
2.10.6-53 ..... Revision 2
2.10.6-54 ..... Revision 2
2.10.6-55 ..... Revision 2
2.10.6-56 ..... Revision 2
2.10.6-57 ..... Revision 2
2.10.6-58 ..... Revision 2
2.10.6-59 ..... Revision 2
2.10.6-60 ..... Revision 2
2.10.6-61 ..... Revision 2
2.10.6-62 ..... Revision 2
2.10.6-63 ..... Revision 2
2.10.6-64 ..... Revision 2
2.10.6-65 ..... Revision 2
2.10.6-66 ..... Revision 2
2.10.6-67 ..... Revision 2
2.10.6-68 ..... Revision 2
2.10.6-69 ..... Revision 2
2.10.6-70 ..... Revision 2
2.10.6-71 ..... Revision 2
2.10.6-72 ..... Revision 2
2.10.6-73 ..... Revision 2
2.10.6-74 ..... Revision 2
2.10.6-75 ..... Revision 2
2.10.6-76 ..... Revision 2
2.10.6-77 ..... Revision 2
2.10.6-78 ..... Revision 2
2.10.6-79 ..... Revision 2
2.10.6-80 ..... Revision 2
2.10.6-81 ..... Revision 2
2.10.6-82 ..... Revision 2
2.10.6-83 ..... Revision 2
2.10.6-84 ..... Revision 2
2.10.6-85 ..... Revision 2
2.10.6-86 ..... Revision 2
2.10.6-87 ..... Revision 2
2.10.6-88 ..... Revision 2
2.10.6-89 ..... Revision 2
2.10.6-90 ..... Revision 2
2.10.6-91 ..... Revision 2
2.10.6-92 ..... Revision 2
2.10.6-93 ..... Revision 2
2.10.6-94 ..... Revision 2
2.10.7-1 ..... Revision 9
2.10.7-2 ..... Revision 2
2.10.7-3 ..... Revision 9
2.10.7-4 ..... Revision 2
2.10.7-5 ..... Revision 2
2.10.7-6 ..... Revision 2
2.10.7-7 ..... Revision 9
2.10.7-8 ..... Revision 2
2.10.7-9 ..... Revision 2
2.10.7-10 ..... Revision 2
2.10.7-11 ..... Revision 2
2.10.7-12 ..... Revision 2
2.10.7-13 ..... Revision 2
2.10.7-14 ..... Revision 9
2.10.7-15 ..... Revision 2
2.10.7-16 ..... Revision 2
2.10.7-17 ..... Revision 2
2.10.7-18 ..... Revision 2

2.10.7-19 ..... Revision 2
2.10.7-20 ..... Revision 2
2.10.7-21 ..... Revision 2
2.10.7-22 ..... Revision 2
2.10.7-23 ..... Revision 2
2.10.7-24 ..... Revision 2
2.10.7-25 ..... Revision 2
2.10.7-26 ..... Revision 2
2.10.7-27 ..... Revision 2
2.10.7-28 ..... Revision 2
2.10.7-29 ..... Revision 2
2.10.8-1 ..... Revision 9
2.10.8-2 ..... Revision 2
2.10.8-3 ..... Revision 1
2.10.8-4 ..... Revision 1
2.10.8-5 ..... Revision 1
2.10.8-6 ..... Revision 1
2.10.8-7 ..... Revision 1
2.10.8-8 ..... Revision 1
2.10.8-9 ..... Revision 1
2.10.8-10 ..... Revision 1
2.10.8-11 ..... Revision 1
2.10.8-12 ..... Revision 1
2.10.8-13 ..... Revision 1
2.10.8-14 ..... Revision 1
2.10.8-15 ..... Revision 1
2.10.8-16 ..... Revision 3
2.10.8-17 ..... Revision 1
2.10.8-18 ..... Revision 1
2.10.8-19 ..... Revision 3
2.10.8-20 ..... Revision 3
2.10.8-21 ..... Revision 1
2.10.8-22 ..... Revision 1
2.10.8-23 ..... Revision 3
2.10.8-24 ..... Revision 3
2.10.8-25 ..... Revision 3
2.10.8-26 ..... Revision 3
2.10.8-27 ..... Revision 1
2.10.8-28 ..... Revision 3
2.10.8-29 ..... Revision 3
2.10.9-1 ..... Revision 9
2.10.9-2 ..... Revision 2
2.10.9-3 ..... Revision 1
2.10.9-4 ..... Revision 1
2.10.9-5 ..... Revision 1
2.10.9-6 ..... Revision 1
2.10.9-7 ..... Revision 1
2.10.9-8 ..... Revision 1
2.10.9-9 ..... Revision 1
2.10.9-10 ..... Revision 1
2.10.9-11 ..... Revision 1
2.10.9-12 ..... Revision 1
2.10.10-1 ..... Revision 9
2.10.10-2 ..... Revision 2
2.10.10-3 ..... Revision 2
2.10.10-4 ..... Revision 2
2.10.10-5 ..... Revision 2
2.10.10-6 ..... Revision 2
2.10.10-7 ..... Revision 2
2.10.10-8 ..... Revision 2
2.10.10-9 ..... Revision 2
2.10.10-10 ..... Revision 9
2.10.10-11 ..... Revision 9

Chapter 3

3-i ..... Revision 9
3-ii ..... Revision 9
3-iii ..... Revision 9
3-iv ..... Revision 9
3-v ..... Revision 9
3.1-1 ..... Revision 9A
3.1-2 ..... Revision 9
3.1-3 ..... Revision 9

3.1-4 ..... Revision 9
3.1-5 ..... Revision 9A
3.1-6 ..... Revision 2
3.1-7 ..... Revision 9
3.1-8 ..... Revision 9
3.2-1 ..... Revision 9
3.2-2 ..... Revision 9
3.2-3 ..... Revision 9
3.2-4 ..... Revision 9
3.2-5 ..... Revision 9
3.2-6 ..... Revision 9
3.2-7 ..... Revision 9
3.2-8 ..... Revision 9
3.2-9 ..... Revision 9
3.2-10 ..... Revision 9
3.2-11 ..... Revision 5
3.2-12 ..... Revision 5
3.2-13 ..... Revision 5
3.2-14 ..... Revision 5
3.2-15 ..... Revision 5
3.2-16 ..... Revision 8
3.2-17 ..... Revision 9
3.2.18 ..... Revision 5
3.2.19 ..... Revision 9A
3.3-1 ..... Revision 9
3.3-2 ..... Revision 9
3.3-3 ..... Revision 9A
3.3-4 ..... Revision 9
3.3-5 ..... Revision 2
3.4-1 ..... Revision 9
3.4-2 ..... Revision 9
3.4-3 ..... Revision 9
3.4-4 ..... Revision 9
3.4-5 ..... Revision 9
3.4-6 ..... Revision 9
3.4-7 ..... Revision 9
3.4-8 ..... Revision 9
3.4-9 ..... Revision 9
3.4-10 ..... Revision 9A
3.4-10a ..... Revision 9A
3.4-11 ..... Revision 9
3.4-12 ..... Revision 9
3.4-13 ..... Revision 9
3.4-14 ..... Revision 9
3.4-15 ..... Revision 9A
3.4-15a ..... Revision 9A
3.4-15b ..... Revision 9A
3.4-16 ..... Revision 9
3.4-17 ..... Revision 9A
3.4-18 ..... Revision 9A
3.4-19 ..... Revision 9A
3.4-20 ..... Revision 9
3.4-21 ..... Revision 9
3.4-22 ..... Revision 9
3.4-23 ..... Revision 9A
3.4-24 ..... Revision 9
3.4-25 ..... Revision 9
3.4-26 ..... Revision 9
3.4-27 ..... Revision 9
3.4-28 ..... Revision 9A
3.4-29 ..... Revision 9
3.4-30 ..... Revision 9
3.4-31 ..... Revision 9
3.4-32 ..... Revision 9
3.4-33 ..... Revision 9
3.4-34 ..... Revision 9
3.4-35 ..... Revision 9
3.4-36 ..... Revision 9
3.4-37 ..... Revision 9
3.4-38 ..... Revision 9
3.4-39 ..... Revision 9
3.4-40 ..... Revision 9
3.4-41 ..... Revision 9
3.4-42 ..... Revision 9

3.4-43 ..... Revision 9
3.4-44 ..... Revision 9
3.4-45 ..... Revision 9
3.4-46 ..... Revision 9
3.4-47 ..... Revision 9
3.4-48 ..... Revision 9
3.4-49 ..... Revision 9
3.4-50 ..... Revision 9
3.4-51 ..... Revision 9
3.4-52 ..... Revision 9
3.4-53 ..... Revision 9
3.4-54 ..... Revision 9
3.4-55 ..... Revision 9
3.4-56 ..... Revision 9
3.4-57 ..... Revision 9
3.4-57a ..... Revision 9A
3.4-58 ..... Revision 9
3.4-59 ..... Revision 9
3.4-60 ..... Revision 9
3.4-61 ..... Revision 9
3.4-62 ..... Revision 9
3.5-1 ..... Revision 9A
3.5-2 ..... Revision 9A
3.5-3 ..... Revision 9A
3.5-4 ..... Revision 9
3.5-5 ..... Revision 9
3.5-6 ..... Revision 9A
3.5-7 ..... Revision 9A
3.5-8 ..... Revision 9
3.5-9 ..... Revision 9A
3.5-10 ..... Revision 9A
3.5-11 ..... Revision 9A
3.5-12 ..... Revision 9A
3.5-13 ..... Revision 9A
3.5-14 ..... Revision 9A

Chapter 4

4-i ..... Revision 9A
4-ii ..... Revision 9A

4.1-1 ..... Revision 9A
4.1-2 ..... Revision 9A
4.1-3 ..... Revision 9A
4.1-4 ..... Revision 9A
4.2-1 ..... Revision 9A
4.2-2 ..... Revision 9A
4.2-3 ..... Revision 9A
4.2-4 ..... Revision 9A
4.2-5 ..... Revision 9A
4.2-6 ..... Revision 9A
4.2-7 ..... Revision 9A
4.2-8 ..... Revision 9A
4.2-9 ..... Revision 9A
4.2-10 ..... Revision 9A
4.2-11 ..... Revision 9A
4.2-12 ..... Revision 9A
4.3-1 ..... Revision 9A
4.3-2 ..... Revision 9A
4.3-3 ..... Revision 9A
4.3-4 ..... Revision 9A
4.3-5 ..... Revision 9A
4.4-1 ..... Revision 1
4.5-1 ..... Revision 1
4.5-2 ..... Revision 1
4.5-3 ..... Revision 1
4.5-4 ..... Revision 1
4.5-5 ..... Revision 1
4.5-6 ..... Revision 1
4.5-7 ..... Revision 1
4.5-8 ..... Revision 1
4.5-9 ..... Revision 1
4.5-10 ..... Revision 1

4.5-11 ..... Revision 1
4.5-12 ..... Revision 1
4.5-13 ..... Revision 1
4.5-14 ..... Revision 1
4.5-15 ..... Revision 1
4.5-16 ..... Revision 1
4.5-17 ..... Revision 1
4.5-18 ..... Revision 1
4.5-19 ..... Revision 1
4.5-20 ..... Revision 1
4.5-21 ..... Revision 1
4.5-22 ..... Revision 1
4.5-23 ..... Revision 1
4.5-24 ..... Revision 9A
4.5-25 ..... Revision 9A
4.5-26 ..... Revision 9A
4.5-27 ..... Revision 9A
4.5-28 ..... Revision 9A
4.5-29 ..... Revision 9A
4.5-30 ..... Revision 9A
4.5-31 ..... Revision 9A
4.5-32 ..... Revision 9A
4.5-33 ..... Revision 9A

Chapter 5

5-i ..... Revision 9
5-ii ..... Revision 9
5-iii ..... Revision 9
5-iv ..... Revision 9
5.0-1 ..... Revision 9A
5.0-2 ..... Revision 9A
5.0-2 ..... Revision 9
5.0-3 ..... Revision 9
5.0-4 ..... Revision 9
5-0-5 ..... Revision 9
5.1-1 ..... Revision 9
5.1-2 ..... Revision 9A
5.1-2a ..... Revision 9A
5.1-3 ..... Revision 9
5.1-4 ..... Revision 9
5.1-5 ..... Revision 9
5.1-6 ..... Revision 9
5.1-7 ..... Revision 9
5.1-8 ..... Revision 9
5.1-9 ..... Revision 9
5.1-10 ..... Revision 9
5.1-11 ..... Revision 9
5.1-12 ..... Revision 9
5.1-13 ..... Revision 9
5.1-14 ..... Revision 9
5.1-15 ..... Revision 9
5.1-16 ..... Revision 9
5.1-17 ..... Revision 9
5.1-18 ..... Revision 9
5.1-19 ..... Revision 9A
5.1-20 ..... Revision 9
5.1-21 ..... Revision 9
5.1-22 ..... Revision 9A
5.1-23 ..... Revision 9A
5.1-24 ..... Revision 9
5.1-25 ..... Revision 9
5.2-1 ..... Revision 9
5.2-2 ..... Revision 9
5.2-3 ..... Revision 9
5.2-4 ..... Revision 9
5.2-5 ..... Revision 2
5.2-6 ..... Revision 2
5.2-7 ..... Revision 2
5.2-8 ..... Revision 1
5.2-9 ..... Revision 2
5.2-10 ..... Revision 9
5.3-1 ..... Revision 9
5.3-2 ..... Revision 9
5.3-3 ..... Revision 9

5.3-4 ..... Revision 9
5.3-5 ..... Revision 9
5.3-6 ..... Revision 2
5.3-7 ..... Revision 1
5.3-8 ..... Revision 1
5.3-9 ..... Revision 1
5.3-10 ..... Revision 1
5.3-11 ..... Revision 1
5.3-12 ..... Revision 1
5.3-13 ..... Revision 1
5.3-14 ..... Revision 2
5.3-15 ..... Revision 2
5.3-16 ..... Revision 1
5.3-17 ..... Revision 1
5.3-18 ..... Revision 1
5.4-1 ..... Revision 9
5.4-2 ..... Revision 1
5.4-3 ..... Revision 9
5.4-4 ..... Revision 9A
5.4-5 ..... Revision 9
5.4-6 ..... Revision 9
5.4-7 ..... Revision 1
5.4-8 ..... Revision 1
5.4-9 ..... Revision 1
5.4-10 ..... Revision 1
5.4-11 ..... Revision 1
5.4-12 ..... Revision 1
5.4-13 ..... Revision 1

Chapter 6

6-i ..... Revision 9
6-ii ..... Revision 9
6-iii ..... Revision 9
6.1-1 ..... Revision 9A
6.1-2 ..... Revision 9A
6.1-2a ..... Revision 9A
6.1-3 ..... Revision 9
6.2-1 ..... Revision 9
6.2-2 ..... Revision 9
6.2-3 ..... Revision 9
6.2-4 ..... Revision 9
6.2-5 ..... Revision 9
6.3-1 ..... Revision 9
6.3-2 ..... Revision 9
6.3-3 ..... Revision 9
6.3-4 ..... Revision 9
6.3-5 ..... Revision 9
6.3-6 ..... Revision 9
6.3-7 ..... Revision 9
6.4-1 ..... Revision 9A
6.4-2 ..... Revision 9A
6.4-2a ..... Revision 9A
6.4-3 ..... Revision 9
6.4-4 ..... Revision 9A
6.4-5 ..... Revision 9A
6.4-6 ..... Revision 9
6.4-7 ..... Revision 9
6.4-8 ..... Revision 9
6.4-9 ..... Revision 9
6.4-10 ..... Revision 9
6.5-1 ..... Revision 9
6.5-2 ..... Revision 9
6.5-3 ..... Revision 9
6.5-4 ..... Revision 9
6.5-5 ..... Revision 9
6.5-6 ..... Revision 9
6.5-7 ..... Revision 9
6.5-8 ..... Revision 9
6.5-9 ..... Revision 9
6.5-10 ..... Revision 9
6.5-11 ..... Revision 9
6.5-12 ..... Revision 9
6.5-13 ..... Revision 9
6.5-14 ..... Revision 9

6.5-15 ..... Revision 9
6.5-16 ..... Revision 9
6.5-17 ..... Revision 9
6.6-1 ..... Revision 9
6.6-2 ..... Revision 9
6.6-3 ..... Revision 9
6.6-4 ..... Revision 9
6.6-5 ..... Revision 9
6.6-6 ..... Revision 9
6.6-7 ..... Revision 9
6.6-8 ..... Revision 9
6.6-9 ..... Revision 9
6.6-10 ..... Revision 9
6.6-11 ..... Revision 9
6.6-12 ..... Revision 9
6.6-13 ..... Revision 9
6.6-14 ..... Revision 9
6.6-15 ..... Revision 9
6.6-16 ..... Revision 9
6.6-17 ..... Revision 9
6.6-18 ..... Revision 9
6.6-19 ..... Revision 9
6.6-20 ..... Revision 9
6.6-21 ..... Revision 9
6.6-22 ..... Revision 9
6.6-23 ..... Revision 9
6.6-24 ..... Revision 9
6.6-25 ..... Revision 9
6.6-26 ..... Revision 9
6.6-27 ..... Revision 9
6.6-28 ..... Revision 9
6.6-29 ..... Revision 9
6.6-30 ..... Revision 9
6.6-31 ..... Revision 9
6.6-32 ..... Revision 9
6.6-33 ..... Revision 9
6.6-34 ..... Revision 9
6.6-35 ..... Revision 9
6.6-36 ..... Revision 9
6.6-37 ..... Revision 9
6.6-38 ..... Revision 9
6.6-39 ..... Revision 9
6.6-40 ..... Revision 9
6.6-41 ..... Revision 9
6.6-42 ..... Revision 9
6.6-43 ..... Revision 9
6.6-44 ..... Revision 9
6.6-45 ..... Revision 9A
6.6-46 ..... Revision 9A
6.6-47 ..... Revision 9A
6.6-48 ..... Revision 9A
6.6-49 ..... Revision 9A
6.6-50 ..... Revision 9A
6.6-51 ..... Revision 9A
6.6-52 ..... Revision 9A
6.6-53 ..... Revision 9A
6.6-54 ..... Revision 9A
6.6-55 ..... Revision 9A
6.6-56 ..... Revision 9A
6.6-57 ..... Revision 9A
6.6-58 ..... Revision 9A
6.6-59 ..... Revision 9A
6.6-60 ..... Revision 9A
6.6-61 ..... Revision 9A
6.6-62 ..... Revision 9A
6.6-63 ..... Revision 9A
6.6-64 ..... Revision 9A
6.6-65 ..... Revision 9A
6.6-66 ..... Revision 9A
6.6-67 ..... Revision 9A
6.6-68 ..... Revision 9A
6.6-69 ..... Revision 9A
6.6-70 ..... Revision 9A
6.6-71 ..... Revision 9A

6.6-72 ..... Revision 9A
6.6-73 ..... Revision 9A
6.6-74 ..... Revision 9A
6.6-75 ..... Revision 9A
6.6-76 ..... Revision 9A
6.6-77 ..... Revision 9A
6.6-78 ..... Revision 9A
6.6-79 ..... Revision 9A
6.6-80 ..... Revision 9A
6.6-81 ..... Revision 9A
6.6-82 ..... Revision 9A
6.6-83 ..... Revision 9A
6.6-84 ..... Revision 9A
6.6-85 ..... Revision 9A
6.6-86 ..... Revision 9A
6.6-87 ..... Revision 9A
6.6-88 ..... Revision 9A
6.6-89 ..... Revision 9A
6.6-90 ..... Revision 9A
6.6-91 ..... Revision 9A
6.6-92 ..... Revision 9A
6.6-93 ..... Revision 9A
6.6-94 ..... Revision 9A
6.6-95 ..... Revision 9A
6.6-96 ..... Revision 9A
6.6-97 ..... Revision 9A
6.6-98 ..... Revision 9A
6.6-99 ..... Revision 9A
6.6-100 ..... Revision 9A
6.6-101 ..... Revision 9A
6.6-102 ..... Revision 9A
6.6-103 ..... Revision 9A
6.6-104 ..... Revision 9A

Chapter 7

7-i ..... Revision 9
7-ii ..... Revision 7
7-iii ..... Revision 9A
7.0-1 ..... Revision 9
7.0-2 ..... Revision 9
7.0-3 ..... Revision 9A
7.1-1 ..... Revision 9
7.1-2 ..... Revision 9
7.1-3 ..... Revision 9
7.1-4 ..... Revision 9
7.1-5 ..... Revision 9
7.1-6 ..... Revision 9
7.1-7 ..... Revision 9
7.1-8 ..... Revision 9
7.1-9 ..... Revision 9A
7.1-10 ..... Revision 9A
7.1-11 ..... Revision 9
7.1-12 ..... Revision 9
7.2-1 ..... Revision 9
7.2-2 ..... Revision 9
7.2-3 ..... Revision 9
7.2-4 ..... Revision 9
7.2-5 ..... Revision 9
7.3-1 ..... Revision 9
7.3-2 ..... Revision 9
7.3-3 ..... Revision 9
7.3-4 ..... Revision 9
7.3-5 ..... Revision 9A
7.3-6 ..... Revision 9A
7.3-7 ..... Revision 9
7.4-1 ..... Revision 9
7.5-1 ..... Revision 3
7.5-2 ..... Revision 9
7.5-3 ..... Revision 9
7.6-1 ..... Revision 9
7.7-1 ..... Revision 9A
7.7-2 ..... Revision 9A
7.7-3 ..... Revision 9A

7.7-4 ..... Revision 9A
7.7-5 ..... Revision 9A

Chapter 8

8-i ..... Revision 9
8-ii ..... Revision 5
8-iii ..... Revision 5
8.0-1 ..... Revision 2
8.1-1 ..... Revision 9
8.1-2 ..... Revision 9
8.1-3 ..... Revision 9
8.1-4 ..... Revision 9
8.1-5 ..... Revision 9
8.1-6 ..... Revision 9
8.1-7 ..... Revision 9
8.1-8 ..... Revision 9
8.1-9 ..... Revision 9
8.1-10 ..... Revision 9
8.1-11 ..... Revision 9
8.1-12 ..... Revision 9
8.1-13 ..... Revision 9
8.1-14 ..... Revision 9
8.1-15 ..... Revision 9
8.1-16 ..... Revision 9
8.1-17 ..... Revision 9A
8.1-18 ..... Revision 9A
8.1-19 ..... Revision 5
8.2-1 ..... Revision 9
8.2-2 ..... Revision 9
8.2-3 ..... Revision 9
8.2-4 ..... Revision 9
8.2-5 ..... Revision 9
8.2-6 ..... Revision 9
8.2-7 ..... Revision 9
8.2-8 ..... Revision 9
8.3-1 ..... Revision 9
8.4-1 ..... Revision 5
8.4-2 ..... Revision 5
8.4-3 ..... Revision 5
8.4-4 ..... Revision 5
8.4-5 ..... Revision 5
8.4-6 ..... Revision 5
8.4-7 ..... Revision 5
8.4-8 ..... Revision 5
8.4-9 ..... Revision 5
8.4-10 ..... Revision 5
8.4-11 ..... Revision 5

Chapter 9

9-i ..... Revision 7
9.0-1 ..... Revision 7
9.0-2 ..... Revision 9
9.0-3 ..... Revision 7
9.0-4 ..... Revision 9
9.0-5 ..... Revision 7
9.0-6 ..... Revision 9
9.0-7 ..... Revision 9
9.0-8 ..... Revision 9A
9.0-9 ..... Revision 9A
9.0-10 ..... Revision 9
9.0-11 ..... Revision 9
9.0-12 ..... Revision 9
9.0-13 ..... Revision 9A

Proprietary Attachment

P-1 ..... Revision 2
5 Drawings (10 Sheets) as specified on enclosed List of Proprietary Drawings

2.6.5.0 Vibration 2.6.5.0-1
2.6.6.0 Water Spray 2.6.6.0-1
2.6.7.0 Free Drop (1 Foot) 2.6.7.0-1
2.6.7.1 One-Foot End Drop 2.6.7.1-1
2.6.7.2 One-Foot Side Drop 2.6.7.2-1
2.6.7.3 One-Foot Corner Drop 2.6.7.3-1
2.6.7.4 Impact Limiters 2.6.7.4-1
2.6.7.5 Closure Analysis - Normal Conditions of Transport 2.6.7.5-1
2.6.7.6 Neutron Shield Analysis 2.6.7.6-1
2.6.7.7 Upper Ring/Outer Shell Intersection Analysis 2.6.7.7-1
2.6.8.0 Corner Drop (1 Foot) 2.6.8.0-1
2.6.9.0 Compression 2.6.9.0-1
2.6.10.0 Penetration 2.6.10.0-1
2.6.10.1 Impact Limiter - Penetration 2.6.10.1-1
2.6.10.2 Neutron Shield Shell - Penetration 2.6.10.2-1
2.6.10.3 Port Cover - Penetration 2.6.10.3-1
2.6.11.0 Fabrication Conditions 2.6.11.0-1
2.6.11.1 Lead Pour 2.6.11.1-1
2.6.11.2 Cooldown 2.6.11.2-1
2.6.11.3 Lead Creep 2.6.11.3-1
2.6.12.0 Fuel Basket Analysis (For Directly Loaded Fuel) - Normal Transport Conditions 2.6.12.0-1
2.6.12.1 Detailed Analysis - PWR Basket for Directly Loaded Fuel 2.6.12.1-1
2.6.12.2 Finite Element Model Description - Directly Loaded PWR Fuel Basket 2.6.12.2-1
2.6.12.3 Thermal Expansion Evaluation of Support Disk - Directly Loaded PWR Fuel Basket 2.6.12.3-1
2.6.12.4 Stress Evaluation of Support Disk for a 1-Foot End Drop Load Condition (Directly Loaded Fuel Configuration) 2.6.12.4-1
2.6.12.5 Stress Evaluation of Support Disk (Directly Loaded Fuel Configuration) for Thermal Plus a 1-Foot End Drop Combined Load Condition 2.6.12.5-1
2.6.12.6 Stress Evaluation of Threaded Rods and Spacer Nuts for a 1-Foot End Drop Load Condition (Directly Loaded Fuel Configuration) 2.6.12.6-1

2.6.12.7 Stress Evaluation of Support Disk (Directly Loaded Fuel Configuration) for a 1-Foot Side Drop Impact Load Condition 2.6.12.7-1
2.6.12.8 Stress Evaluation of Support Disk (Directly Loaded Fuel Configuration) for Thermal Plus a 1-Foot Side Drop Combined Load Condition 2.6.12.8-1
2.6.12.9 Support Disk Web Stresses for a 1-Foot Side Drop Condition (Directly Loaded Fuel Configuration) 2.6.12.9-1
2.6.12.10 Support Disk Shear Stresses for a 1-Foot Side Drop and a 1-Foot End Drop Conditions (Directly Loaded Fuel Configuration) 2.6.12.10-1
2.6.12.11 Bearing Stress - Basket Contact with Inner Shell (Directly Loaded Fuel Configuration) 2.6.12.11-1
2.6.12.12 Evaluation of Triaxial Stress for the Fuel Basket Support Disk (Directly Loaded Fuel Configuration) 2.6.12.12-1
2.6.12.13 Fuel Basket (Directly Loaded Fuel Configuration) Weldment Analysis for 1-Foot Drop 2.6.12.13-1
2.6.13 Transportable Storage Canister Analysis - Normal Transport Condition 2.6.13-1
2.6.13.1 Analysis Description - Canister 2.6.13.1-1
2.6.13.2 Finite Element Model Description - Canister 2.6.13.2-1
2.6.13.3 Thermal Expansion Evaluation of Canister for Fuel 2.6.13.3-1
2.6.13.4 Stress Evaluation of the Canister for 1-Foot End Drop Load Condition 2.6.13.4-1
2.6.13.5 Stress Evaluation of the Canister for Thermal Plus a 1-Foot End Drop Load Condition 2.6.13.5-1
2.6.13.6 Stress Evaluation of the Canister for a 1-Foot Side Drop Load Condition 2.6.13.6-1
2.6.13.7 Stress Evaluation of the Canister for Thermal Plus a 1-Foot Side Drop Load Condition 2.6.13.7-1
2.6.13.8 Canister Shear Stresses for a 1-Foot Side Drop and a 1-Foot End Drop Condition 2.6.13.8-1
2.6.13.9 Canister Bearing Stresses for 1-Foot Side Drop 2.6.13.9-1
2.6.13.10 Canister Buckling Evaluation for 1-Foot End Drop 2.6.13.10-1
2.6.13.11 Canister Lifting Evaluation 2.6.13.11-1
2.6.14 Canistered Fuel Basket Analysis - Normal Conditions of Transport 2.6.14-1
2.6.14.1 Detailed Analysis - Canistered Yankee Class Fuel Basket 2.6.14-6
2.6.14.2 Finite Element Model Description - Canistered Fuel Basket 2.6.14-6

2.6.14.3 Thermal Expansion Evaluation of Support Disk 2.6.14-11
2.6.14.4 Stress Evaluation of Support Disk for a 1-Foot End Drop Condition 2.6.14-12
2.6.14.5 Stress Evaluation of Support Disk for Thermal Plus a 1-Foot End Drop Combined Condition 2.6.14-14
2.6.14.6 Stress Evaluation of Tie Rods and Spacers for a 1-Foot End Drop Load Condition 2.6.14-16
2.6.14.7 Stress Evaluation of Support Disk for a 1-Foot Side Drop Load Condition 2.6.14-17
2.6.14.8 Stress Evaluation of Support Disk for Thermal Plus a 1-Foot Side Drop Combined Condition 12.6.14-42
2.6.14.9 Support Disk Shear Stresses for 1-Foot Drops 2.6.14-46
2.6.14.10 Bearing Stress - Basket Contact with Inner Shell 2.6.14-46
2.6.14.11 Fuel Basket Weldment Analysis for 1-Foot End Drop 2.6.14-46
2.6.14.12 Canistered Fuel Basket Support Disk - Buckling Evaluation (Normal Conditions of Transport) 2.6.14-51
2.6.15 Spacer Design for Use with the NAC-STC Transporting Canistered Fuel - Normal Conditions of Transport 2.6.15-1
2.6.15.1 Aluminum Honeycomb 2.6.15-2
2.6.15.2 Evaluation of Aluminum Honeycomb for Normal Conditions of Transport 2.6.15-2
2.6.16 Greater Than Class C Waste (GTCC) Basket Analysis - Normal Conditions of Transport 2.6.16-1
2.6.16.1 Method of Analysis 2.6.16-3
2.6.16.2 GTCC Waste Basket Tube - End Drop Evaluation 2.6.16-4
2.6.16.3 GTCC Waste Basket Tube - Side Drop Evaluation 2.6.16-5

2.7 Hypothetical Accident Conditions 2.7.-1
2.7.1 Free Drop (30 Feet) 2.7.1.-1
2.7.1.1 Thirty-Foot End Drop 2.7.1.1-1
2.7.1.2 Thirty-Foot Side Drop 2.7.1.2-1
2.7.1.3 Thirty-Foot Corner Drop 2.7.1.3-1
2.7.1.4 Thirty-Foot Oblique Drop 2.7.1.4-1
2.7.1.5 Lead Slump Resulting From a Cask Drop Accident 2.7.1.5-1
2.7.1.6 Closure Analysis - Hypothetical Accident Conditions 2.7.1.6-1

2.7.2 Puncture 2.7.2-1
2.7.2.1 Puncture - Cask Side Midpoint 2.7.2.1-1
2.7.2.2 Puncture - Center of Outer Lid 2.7.2.2-1
2.7.2.3 Puncture - Center of Cask Bottom 2.7.2.3-1
2.7.2.4 Puncture - Port Cover 2.7.2.4-1
2.7.2.5 Puncture Accident - Shielding Consequences 2.7.2.5-1
2.7.2.6 Puncture - Conclusion 2.7.2.6-1
2.7.3 Thermal 2.7.3.1-1
2.7.3.1 Discussion 2.7.3.1-1
2.7.3.2 Pressure Stress Evaluation 2.7.3.2-1
2.7.3.3 Thermal Stress Evaluation 2.7.3.3-1
2.7.3.4 Bolts - Closure Lids (Thermal Accident) 2.7.3.4-1
2.7.3.5 Performance Summary - Thermal Accident 2.7.3.5-1
2.7.3.6 Conclusion 2.7.3.6-1
2.7.4 Crush 2.7.4-1
2.7.5 Immersion - Fissile Material 2.7.5-1
2.7.6 Immersion - All Packages 2.7.6-1
2.7.7 Damage Summary 2.7.7-1
2.7.8 Directly Loaded Fuel Basket Analysis - Accident Conditions 2.7.8-1
2.7.8.1 Stress Evaluation of Support Disk - Directly Loaded Fuel Configuration 2.7.8.1-1
2.7.8.2 Stress Evaluation of Threaded Rods and Spacer Nuts - Accident Condition 2.7.8.2-1
2.7.8.3 Assessment of Buckling 2.7.8.3-1
2.7.8.4 Fuel Tube Analysis 2.7.8.4-1
2.7.8.5 Fuel Basket Weldment Analysis for 30-Foot ..... End Drop
2.7.8.5-1
2.7.9 Canistered Fuel Basket Analysis - Accident Conditions 2.7.9-1
2.7.9.1 Stress Evaluation of Support Disk 2.7.9-5
2.7.9.2 Stress Evaluation of Tie Rods and Spacers - Accident Conditions 2.7.9-23
2.7.9.3 Canistered Fuel Basket Support Disk Buckling Evaluation 2.7.9-25
2.7.9.4 Fuel Tube Analysis 2.7.9-34
2.7.9.5 Canistered Fuel Basket Weldment Analysis for 30-Foot End Drop 2.7.9-37
2.7.10 Greater Than Class C (GTCC) Waste Basket Analysis - Accident Conditions 2.7.10-1
2.7.11 Transportable Storage Canister Analysis - Accident Condition 2.7.11-1
2.7.11.1 Canister - Accident Analysis Description 2.7.11-2
2.7.11.2 Analysis Results 2.7.11-2

3.4.3 Minimum Temperatures 3.4-17
3.4.4 Maximum Internal Pressure 3.4-17
3.4.5 Maximum Thermal Stresses 3.4-29
3.4.6 Summary of NAC-STC Performance for Normal Transport Conditions 3.4-30
3.4.7 Normal Heat-up Transient 3.4-30
3.4.8 Assessment Criteria for the Package Passive Heat Rejection System 3.4-31

3.5 Hypothetical Accident Thermal Evaluation 3.5-1
3.5.1 Thermal Model 3.5-1
3.5.2 Package Conditions and Environment 3.5-3
3.5.3 Package Temperatures 3.5-4
3.5.4 Maximum Internal Pressure 3.5-5
3.5.5 Maximum Thermal Stresses 3.5-8
3.5.6 Evaluation of Package Performance for Hypothetical Accident Thermal Conditions 3.5-8

4.0 **CONTAINMENT** 4.1-1

4.1 Containment Boundary 4.1-1
4.1.1 Containment Vessel 4.1-2
4.1.2 Containment Penetrations 4.1-2
4.1.3 Seals and Welds 4.1-2
4.1.4 Closure 4.1-4

4.2 Containment Requirements for Normal Conditions of Transport 4.2-1
4.2.1 Containment of Radioactive Material 4.2-2
4.2.2 Pressurization of Containment Vessel 4.2-2
4.2.3 Containment Criterion for Normal Conditions of Transport 4.2-3

4.3 Containment Requirements for Hypothetical Accident Conditions 4.3-1
4.3.1 Fission Gas Products 4.3-1
4.3.2 Containment of Radioactive Material 4.3-1
4.3.3 Containment Criterion for Accident Conditions 4.3-2

4.4 Special Requirements 4.4-1

4.5 Appendix 4.5-1
4.5.1 Metallic O-Rings 4.5-1
4.5.2 Blended Polytetrafluoroethylene (BTFE) O-Rings 4.5-14
4.5.3 Expansion Foam 4.5-18
4.5.4 Fireblock Protective Coating 4.5-21
4.5.5 Calculation of the A_2 Values for the Design Basis Fuel 4.5-24

5.0 SHIELDING EVALUATION 5.0-1

5.1 Discussion and Results 5.1-1
5.1.1 Design Criteria 5.1-1
5.1.2 Design Basis Fuel 5.1-2
5.1.3 Shielding Materials 5.1-3
5.1.4 Results 5.1-3

5.2 Source Specification 5.2-1
5.2.1 Neutron Source 5.2-3
5.2.2 Gamma Sources 5.2-3
5.2.3 GTCC Sources 5.2-4

5.3 Model Specification 5.3-1
5.3.1 Description of Radial Directly Loaded Fuel Shielding Models 5.3-1
5.3.2 Description of Axial Directly Loaded Fuel Shielding Models 5.3-3
5.3.3 Cask Regional Material Compositions 5.3-4
5.3.4 Description of Canistered GTCC Waste Configuration Shielding Models 5.3-4

5.4 Shielding Evaluation 5.4-1
5.4.1 Computer Code Descriptions 5.4-1
5.4.2 Radial Shielding Calculations 5.4-2
5.4.3 Axial Shielding Calculations 5.4-4
5.4.4 Ducting Through Fins 5.4-5

6.0 CRITICALITY EVALUATION 6.1-1

6.1 Discussion and Results 6.1-1
6.1.1 Directly Loaded Uncanistered Fuel 6.1-1
6.1.2 Canistered Fuel 6.1-2

6.2 Package Fuel Loading 6.2-1

6.3 Criticality Model Specification 6.3-1
6.3.1 Calculational Methodology 6.3-1
6.3.2 Description of Calculational Models 6.3-1
6.3.3 Package Regional Densities 6.3-2

6.4 Criticality Calculation 6.4-1
6.4.1 Fuel Loading Optimization 6.4-2
6.4.2 Criticality Results for Directly Loaded, Uncanistered Fuel 6.4-2
6.4.3 Criticality Results for Canistered Yankee Class Fuel 6.4-4

6.5 Critical Benchmark 6.5-1
6.5.1 Benchmark Experiments for CSAS25 Uncanistered Fuel Analysis 6.5-1
6.5.2 Benchmark Calculations for CSAS25 Uncanistered Fuel Analysis 6.5-1
6.5.3 Results of Benchmark Calculations for CSAS25 Uncanistered Fuel Analysis 6.5-1
6.5.4 Validation of CSAS25 in SCALE Version 4.3 for Canistered Analysis 6.5-2

6.6 Appendix 6.6-1

7.0 **OPERATING PROCEDURES** 7.0-1

7.1 Outline of Procedures for Receipt and Loading the Cask 7.1-1
7.1.1 Receiving Inspection 7.1-1
7.1.2 Preparation of Cask for Loading 7.1-2
7.1.3 Loading Fuel 7.1-5

7.2 Preparation for Transport 7.2-1
7.2.1 Preparation for Transport (immediately after loading) 7.2-1
7.2.2 Preparation for Transport (after extended storage) 7.2-2

7.3 Outline of Procedures for Unloading the Cask 7.3-1
7.3.1 Receiving Inspection 7.3-1
7.3.2 Preparation of Cask for Unloading 7.3-1
7.3.3 Unloading Fuel 7.3-3

7.3.4 Preparation of Empty Cask for Transport 7.3-6
7.4 Preparation of the Cask 7.4-1
7.4.1 Inspections 7.4-1
7.4.2 Tests 7.4-1
7.4.3 Special Preparations 7.4-1

7.5 Leakage Testing Requirements and Procedures 7.5-1
7.5.1 Containment System Periodic Verification Leak Test Procedures 7.5-1
7.5.2 Leak Test Acceptance Criteria and Test Sensitivity 7.5-2
7.5.3 Corrective Action 7.5-3

7.6 Railcar Design and Certification Requirements 7.6-1
7.6.1 Railcar and Tie-Down Design Requirements 7.6-1
7.6.2 Railcar Tie-Down Design Loadings 7.6-1
7.6.3 Railcar and Tie-Down Certification 7.6-1

7.7 Procedure for Loading the NAC-MPC Canister 7.7-1
7.7.1 Loading and Closing the Canister 7.7-1

8.0 ACCEPTANCE TESTS AND MAINTENANCE PROGRAM 8.0-1

8.1 Fabrication Requirements and Acceptance Tests 8.1-1
8.1.1 Weld Procedures, Examination, and Acceptance 8.1-1
8.1.2 Structural and Pressure Tests 8.1-3
8.1.3 Leak Tests 8.1-6
8.1.4 Component Tests 8.1-8
8.1.5 Tests for Shielding Integrity 8.1-10
8.1.6 Thermal Test 8.1-13
8.1.7 Neutron Absorber Tests 8.1-16
8.1.8 Transportable Storage Canister 8.1-17

8.2 Maintenance Program 8.2-1

8.2.1 Structural and Pressure Tests of the Cask 8.2-1
8.2.2 Leak Tests 8.2-2
8.2.3 Subsystems Maintenance 8.2-3
8.2.4 Valves, Rupture Disks and Gaskets on the Containment Vessel 8.2-3
8.2.5 Shielding 8.2-3
8.2.6 Periodic Thermal Test 8.2-3
8.2.7 Miscellaneous 8.2-6
8.2.8 Maintenance Program Schedule 8.2-7

8.3 Quick-Disconnect Valves 8.3-1

8.4 Cask Body Fabrication 8.4-1
8.4.1 General Fabrication Procedures 8.4-1
8.4.2 Description of Lead Pour Procedures 8.4-6

9.0 REFERENCES 9.0-1

This Page Intentionally Left Blank

Table of Contents

1.0 GENERAL INFORMATION 1.0-1

1.1 Introduction 1.1-1

1.2 Package Description 1.2-1
- 1.2.1 Packaging 1.2-1
- 1.2.2 Operational Features 1.2-15
- 1.2.3 Contents of Packaging 1.2-15

1.3 Appendices 1.3-1
- 1.3.1 Quality Assurance 1.3-1
- 1.3.2 License Drawings 1.3-1

List of Figures

Figure 1.1-1 Major Cask Dimensions (in inches) 1.1-5
Figure 1.2-1 Operational Schematic for the NAC-STC 1.2-17
Figure 1.2-2 Reconfigured Fuel Assembly 1.2-17a

List of Tables

Table 1.0-1 Terminology 1.0-2
Table 1.2-1 Design Characteristics of the NAC-STC 1.2-18
Table 1.2-2 NAC-STC Design Basis Fuel Characteristics 1.2-24
Table 1.2-3 Isotopic Constituents of GTCC Waste 1.2-25

List of Drawings

423-800, sheets 1-2	Rev 4	Cask Assembly
423-802, sheets 1-6	Rev 7	Cask Body
423-803	Rev 1	Lid Assembly - Inner
423-804, sheets 1-3	Rev 2	Details - Inner Lid
423-805	Rev 1	Lid Assembly - Outer
423-806	Rev 1	Port Coverplate Assy - Inner Lid
423-807, sheets 1-2	Rev 0	Assembly, Port Cover
423-209	Rev 0	Impact Limiter Assy - Upper
423-210	Rev 0	Impact Limiter Assy - Lower
423-811, sheets 1-2	Rev 5	Details
423-812	Rev 0	Nameplates
423-870	Rev 2	Fuel Basket Assy - PWR, 26 Element
423-871	Rev 1	Bottom Weldment - Fuel Basket
423-872	Rev 3	Top Weldment - Fuel Basket
423-873	Rev 1	Support Disk and Misc Basket Details
423-874	Rev 2	Heat Transfer Disk - Fuel Basket
423-875	Rev 1	Tube, Captivated BORAL
423-900	Rev 2	Package Assembly, Transportation
423-901	Rev 2	Transportation Package, Concept
455-800, sheets 1-2	Rev 0	Assembly, Transport Cask, MPC-Yankee

List of Drawings (continued)

455-801, sheets 1-2	Rev 0	Assembly, Transport Cask, NAC-MPC
455-820	Rev 0	Spacers, Transport Cask, MPC-Yankee
455-870	Rev 1	Canister Shell, MPC-Yankee
455-871, sheets 1-2	Rev 1	Details, Canister, MPC-Yankee
455-872	Rev 1	Assembly, Transportable Storage Canister (TSC), MPC-Yankee
455-873	Rev 1	Assembly, Drain Tube, Canister, MPC-Yankee
455-881	Rev 0	PWR Fuel Tube, Captivated BORAL, MPC-Yankee
455-887, sheets 1-2	Rev 1	Basket Assembly, 24 GTCC Container MPC-Yankee
455-888	Rev 1	Assembly, Transportable Storage Canister (TSC), 24 GTCC Container, MPC-Yankee
455-891	Rev 0	Bottom Weldment, Fuel Basket, MPC-Yankee
455-892	Rev 1	Top Weldment, Fuel Basket, MPC-Yankee
455-893	Rev 1	Support Disk and Misc. Basket Details, MPC-Yankee
455-894	Rev 1	Heat Transfer Disk, Fuel Basket, MPC-Yankee
455-895	Rev 0	Fuel Basket Assembly, MPC-Yankee

This Page Intentionally Left Blank

1.0 GENERAL INFORMATION

NAC International Inc. (NAC) has designed a Storable Transport Cask (NAC-STC) for spent nuclear fuel. The NAC-STC is licensed by the United States Nuclear Regulatory Commission (U.S. NRC) for the transport of spent nuclear fuel. This Safety Analysis Report (SAR) addresses the ability of the NAC-STC to satisfy the U.S. NRC transportation requirements for spent fuel, either directly loaded in the cask (uncanistered) or in a canister, and Greater Than Class C (GTCC) waste in a canister, as prescribed in 10 CFR 71. This chapter of the NAC-STC SAR presents a general introduction to the cask and a detailed description of its design features. The terminology used throughout this report is summarized in Table 1.0-1.

The NAC-STC may be shipped by rail, barge, or heavy-haul vehicle. The NAC-STC is assigned a Transport Index of 20 based on the shielding evaluation presented in Section 5.1.4. As shown in Chapter 6, the Transport Index based on nuclear criticality safety is zero, since an infinite number of packages with optimum moderation remain subcritical.

The NAC-STC has been designed to satisfy the international requirements of IAEA Safety Series No. 6, in addition to U. S. requirements prescribed in 10 CFR 71.

Table 1.0-1 Terminology

Cask Model	NAC-STC
NAC-STC Cask	This packaging consists of a spent-fuel storable transport cask body with dual closure lids and energy-absorbing impact limiters.
Packaging	The assembly of components necessary to ensure compliance with the packaging requirements of 10 CFR 71. Within this report, the packaging is denoted as the NAC-STC.
Package	The packaging with its radioactive contents (payload), as presented for transport (10 CFR 71.4). Within this report, the package is denoted as the NAC-STC, the NAC-STC cask or, simply, the cask.
Payload	Twenty-six (26) pressurized water reactor (PWR) fuel assemblies in the directly loaded fuel (uncanistered) configuration or up to thirty-six (36) pressurized water reactor (PWR) fuel assemblies or up to 24 GTCC waste containers in the canistered configuration.
Containment System	The components of the packaging intended to retain the radioactive material during transport.
Cask Body	
- Multiwall Body	Construction of the cask body, which consists of concentric layers of the inner shell, gamma shielding, outer shell and neutron shielding materials.
- Neutron Shield	Consists of the stainless steel shell, gussets, and end plates; copper-stainless steel (Cu/SS) fins; and the solid NS4FR neutron shielding material.

Table 1.0-1 Terminology (continued)

Transport Impact Limiters (Upper and Lower)	Impact limiters designed for use exclusively during transport of the NAC-STC. They protect the cask by limiting impact loads during the 1-foot free drop (normal conditions of transport) and the 30-foot free drop (hypothetical accident conditions).
Greater Than Class C Waste (GTCC)	Irradiated and surface contaminated metal, usually stainless steel, whose disposal is controlled by 10 CFR 61 due to the presence of very long-lived isotopes, including Ni-59, Nb-94 and C-14. This waste results from reactor decommissioning.
Yankee Class Fuel	Fuel that includes United Nuclear Type A and Type B, Combustion Engineering Type A and Type B, Exxon-ANF Type A and Type B, Westinghouse Type A and Type B and failed fuel cages that are bound by the above fuel types.
Reconfigured Fuel Assembly	A component having the same external dimension as a standard Yankee Class fuel assembly that ensures geometry control and confinement of Yankee Class fuel having cladding defects. The reconfigured fuel assembly can contain a maximum of 64 full length fuel rods.

This Page Intentionally Left Blank

The body of the NAC-STC is a smooth right-circular cylinder of multiwall construction that consists of stainless steel inner and outer shells separated by lead gamma radiation shielding, which is poured in place. The center section of the inner shell is fabricated from Type 304 stainless steel. At each end, inner shell rings, which are fabricated from Type XM-19 stainless steel, provide the transition to the bottom inner and top forgings. The outer shell is also fabricated from Type 304 stainless steel. The inner and outer shells are welded to the Type 304 stainless steel top forging, which is a ring that is machined to mate with the inner and outer lids. The inner and outer shells are also welded to the Type 304 stainless steel bottom inner and outer forgings, respectively. The cask bottom consists of the two forgings and a plate with neutron shield material sandwiched between the bottom inner forging and the bottom plate. Neutron shield material is also placed in an annulus that surrounds the cask outer shell along the length of the cask cavity. The neutron shielding material is a solid synthetic polymer (NS4FR) developed by BISCO Products, Inc.. The neutron shield annulus is enclosed by a Type 304 stainless steel shell and by end plates that are welded to the outer shell. Two relief valves are provided in the bottom of the neutron shield annulus to aid the operator by minimizing recovery efforts associated with a severe thermal accident condition (fire). Neutron shielding is also provided on the top of the cask by a layer of NS4FR enclosed in the inner lid.

Redundant lifting capability for the NAC-STC is provided by four lifting trunnions welded to the top forging at 90-degree intervals. Rotation trunnion recesses are located on the outer shell near the bottom of the cask to permit the NAC-STC to be rotated to the horizontal position and to provide longitudinal tiedown restraint in the aft direction. A Type 304 stainless steel shear ring is provided at the top end of the radial neutron shield to supply longitudinal restraint when the cask is positioned horizontally for transport in the front support structure.

For fuel assemblies loaded directly into the NAC-STC, a stainless steel basket locates and supports the 26 PWR fuel assemblies in the cask cavity. The basket design utilizes a series of high-strength stainless steel support disks to support the fuel assemblies in stainless steel tubes, which include BORAL neutron poison sheets (0.01 g/cm^2 B^{10} minimum). Aluminum heat transfer disks are provided to enhance the thermal performance of the package. The heat transfer disks are also supported by the stainless steel basket.

For the canistered configuration, two aluminum honeycomb spacers, placed one above the canister and one below, locate the canister in the cask cavity so that the location of the Center of Gravity (CG) of the packaging is the same as it is for the uncanistered fuel packaging. The

aluminum honeycomb is enclosed in an 6061-T6 aluminum alloy shell. The canister shell, bottom and welded shield and structural lids are fabricated from stainless steel. The canister contains a stainless steel basket that locates and supports up to 36 Yankee Class fuel assemblies. The canister may contain one or more reconfigured fuel assemblies as shown in Figure 1.2-2. The reconfigured fuel assembly is designed to contain up to 64 Yankee Class fuel rods, or portions thereof, which are classified as failed, and to maintain the geometric positions of the rods.

The total number of full length rods that can be placed in the reconfigured fuel assembly is less than that in a standard Yankee Class fuel assembly (64 rods versus 256 rods). Consequently, the effects of a reconfigured fuel assembly placed in a canister (e.g. criticality, weight, thermal output, source term) are significantly less than the effects of a design basis (standard) Yankee Class fuel assembly.

The external dimensions, and the top end fitting, of the reconfigured fuel assembly are the same as those of a standard Yankee Class fuel assembly, allowing it to be handled in the same way as a standard assembly.

The basket for the canistered configuration is similar in design to that used for directly loaded fuel. The NAC-STC may also be used to transport up to 24 containers of GTCC waste in a transportable storage canister.

Impact limiters consisting of a combination of redwood and balsa wood encased in Type 304 stainless steel are provided to limit the g-loads acting on the cask during a drop accident load condition. The g-loads acting on the cask are limited by the crush strength of the redwood and balsa wood contained in the impact limiters.

The NAC-STC provides a testable containment for the fuel under both normal transport and hypothetical accident conditions. Any number of NAC-STCs may be shipped at one time, each cask on its own railcar. The NAC-STC may also be shipped in any number on board ships, barges, or special heavy-haul vehicles.

1.2 Package Description

This section presents a basic description of the NAC-STC and the contents that may be transported. An operational schematic of the cask is presented in Figure 1.2-1. Detailed dimensional drawings are provided in Section 1.3.2. The design characteristics of the NAC-STC are summarized in Table 1.2-1.

1.2.1 Packaging

1.2.1.1 Gross Weight

The maximum gross transport weight of the NAC-STC spent-fuel shipping cask is calculated to be 249,700 pounds for directly loaded fuel. This weight is calculated based on a fuel assembly weight of 1,525 pounds. When the NAC-STC is loaded on its railcar, the gross weight of the railcar (including cask, impact limiters, supports, and personnel barrier) will satisfy the requirements of the Association of American Railroads. A summary of the calculated component weights, which are detailed in Table 2.2.0-1, is given below:

Component	Directly Loaded Fuel Weight (pounds)	Canistered Fuel Weight (pounds)	Canistered GTCC Waste Weight (pounds)
Cask Body	175,970	175,970	175,970
Basket	16,350	--	--
Impact Limiters	17,730	17,730	17,730
Fuel or GTCC Waste	39,650	30,600	12,340
Canister	--	14,600	14,600
Canister Basket	--	9530	26,471
Spacers	--	860	860
Total (calculated)	249,700	249,290	247,971
Analysis Weight	250,000	250,000	250,000

1.2.1.2 Material of Construction, Dimensions and Fabrication

The NAC-STC body is of cylindrical, multiwall construction. The materials of construction of the structural components of the cask body are Type 304, Type XM-19, and Type 17-4 PH

inner and outer shells. Poured-in-place Chemical Lead fills the annulus between the inner and outer shells and serves as the primary gamma radiation shield. The top forging, which is a ring that forms the upper end of the cask, is welded to the inner and outer shells. The SA-336 Type 304 stainless steel inner lid is recessed in and bolted to the top forging. The SA-705, Type 630, H1150, 17-4 PH stainless steel outer lid is bolted into the end of the top forging. The vent and drain ports are recessed into the inner lid and are each protected by an SA-240, Type 304 stainless steel port coverplate. The interlid port and the pressure port are recessed in the top forging and are protected by SA-705, Type 630, 17-4 PH stainless steel port covers. At the lower end of the cask, the inner and outer shells are welded to the cask bottom, which consists of two forgings and a plate-a cup-shaped bottom inner forging that is the lower end of the cask cavity, a ring-shaped bottom outer forging that forms the exterior of the cask bottom and connects the outer shell to the bottom inner forging, and a bottom plate that is the bottom end of the cask. Neutron radiation shielding is provided by NS4FR, a poured-in-place solid synthetic neutron-absorbing polymer, which surrounds the outer shell along the cavity region and is enclosed by a shell and end plates that are welded to the outer shell. A layer of NS4FR is enclosed in the inner lid and in the cask bottom to provide neutron shielding at the ends of the cask during cask loading operations. Twenty-four explosively bonded copper and Type 304 stainless steel fins are located in the radial neutron shield to enhance the heat rejection capability of the NAC-STC and to support the neutron shield shell and end plates. The cask is passively cooled.

In the event of an accident during transport, where impact force(s) may be applied to the cask, the NAC-STC is protected by energy-absorbing impact limiters that consist of redwood and balsa wood enclosed in a stainless steel shell. The cup-shaped impact limiters fit over each end of the cask and dissipate kinetic energy by crushing the wood at known force values, limiting the g-loads acting on the cask during an impact load condition.

The NAC-STC is provided with four lifting trunnions on the outside of the top forging at 90-degree intervals. The lifting trunnions are fabricated from SA-705, Type 630, 17-4 PH stainless steel. Only two diametrically opposite trunnions are required to lift the NAC-STC. Two additional lifting trunnions are provided for those facilities that require redundant lifting. Two rotation trunnion recesses are located on the outer shell near the bottom of the cask.

1.2.1.2.8 Transportable Storage Canister

The transportable storage canister consists of four (4) principal components. These are the canister, canister basket, shield lid and structural lid. The canister consists of an annular right-circular shell closed at one end by a bottom plate. The bottom plate is 1.0-inch thick Type 304L stainless steel. The shell is constructed of 5/8-inch rolled Type 304L stainless steel plate. The edges of the rolled plates are joined with full penetration welds. The bottom plate is attached to the shell also using a full penetration weld. The canister shell is constructed in accordance with ASME Section III, Subsection NB. The inside and outside diameter of the canister are 69.39 inches and 70.64 inches, respectively. The inside depth is 121.5 inches. The overall external length of the canister is 122.5 inches.

After loading, the canister is closed by a shield lid and structural lid. The shield lid is a 5-inch thick Type 304L stainless steel plate. It is joined to the canister shell using a partial penetration weld. The shield lid contains the drain and fill penetrations and provides gamma radiation protection to operators for the draining, drying and inerting operations attendant to sealing the canister. After the shield lid is welded in place, the shield lid weld is leak tested in accordance with ANSI N 14.5 to ensure that the required leaktightness is achieved.

The structural lid is a 3-inch-thick Type 304L stainless steel plate. It is attached to the canister shell with a partial penetration weld. Both the shield lid and structural lid welds are inspected in accordance with ASME Section V, Article 6. Removable lifting fixtures installed in the structural lid are used to lift the loaded canister.

1.2.1.2.8.1 Canister Fuel Basket

The canister fuel basket is used to position up to 36 Yankee Class fuel assemblies within the canister and to maintain geometry control of the fuel during all of the transport (and storage) conditions. The canister fuel basket is similar in design to the directly loaded fuel basket. It differs primarily in its principal dimensions. As shown in Table 1.2-2, there are minor weight variations between Yankee Class fuel assembly types. Fuel assembly types may be mixed within the canister basket, provided that the contents weight limit of 30,600 pounds is not exceeded. Mixing fuel types within the weight limit can result in a basket containing 35 fuel assemblies, whereas loading a basket with only Westinghouse fuel would result in the basket containing 34 assemblies.

The fuel basket design is a right-circular cylinder with square fuel tubes laterally supported by a series of support disks, which are retained by split spacers on tie rods at eight locations. The split spacers are installed to provide a solid load path in compression between the support disks. The support disks are 0.5-inch-thick, 68.98-inch-diameter 17-4 PH stainless steel disks spaced 3.91 inches center-to-center with square holes for the fuel tubes. The top end disk (top weldment) and the bottom end disk (bottom weldment) are fabricated from Type 304 stainless steel. They are geometrically similar to the support disks and are 0.5-inch thick. The tie rods have a 1-1/8-inch diameter and are fabricated from Type 304 stainless steel. The split spacers are 2.5 inches in diameter by 1.492 inches long, with an additional 2.0 inch diameter by 0.463 long extension, and are also fabricated from Type 304 stainless steel. The fuel tubes are fabricated from Type 304 stainless steel and provide support for encased BORAL sheet welded onto each of the four external sides. The BORAL provides criticality control in the basket. No structural credit is assumed for the stainless steel tubes as a contributor to the total structural strength of the basket and support of the fuel assemblies.

The canistered fuel basket accommodates fuel assemblies in an aligned configuration in 7.8-inch inside dimension square fuel tubes, which have composite 0.141-inch thick walls. The fuel tubes are supported in the basket assembly between the top and bottom weldment plates. The hole in the top weldment is 7.78 inches square. The hole in the bottom weldment is 6.0 inches square. The top of the fuel tube has a flange surface which extends to 8.65 inches square. The basket design traps the fuel tube between the top and bottom weldments preventing axial movement of the fuel tube. The minimum width of the support disk webs between the fuel tubes is 0.75 inches.

Fourteen (14) Type 6061-T6 aluminum alloy heat transfer disks, 0.5-inches thick and 68.7 inches in diameter, are supported by the tie rods and split spacers, which also support and locate the stainless steel support disks. These aluminum disks are located at the center of the axial spacing between the stainless steel support disks and are sized to preclude contact with the cask inner shell and basket tie rods as a result of differential thermal expansion.

The canistered fuel basket has been designed to facilitate filling with water and subsequent draining. A 1.0-inch-diameter rounded notch is located at the bottom of each fuel tube, ensuring that there will be free flow between the inner tube regions and the disk regions. In addition, water will also flow between the disks in the gap between each of the tubes. Each of the disks has three (3) 1.25-inch-diameter holes to facilitate water flow between disks. Also, to facilitate flow to the drain line, the bottom plate is positioned by supports 1.5 inches above the bottom of

the cask. These design features have been provided to ensure that there is a free flow of water in the cask basket that results in even filling and draining of the cask.

1.2.1.2.8.2 Canister GTCC Waste Basket

The canister GTCC waste basket positions and supports up to 24 Yankee Class GTCC waste containers. The basket is a modified tube and disk design. The maximum loaded weight of a GTCC waste container is 514 pounds, so the maximum contents weight is 12,340 pounds for 24 containers.

The GTCC waste basket is a right-circular cylinder with square tubes laterally supported by a series of 8 support disks. The support disks are 1.0 inch thick, 68.98 inches diameter, Type 304 stainless steel disks that are spaced 15.60 inches center-to-center. The support disks are open in the center region to accommodate the twenty-four 8.20-inch square tubes. The tubes are supported full length by 2.5-inch thick support walls all around the center region. The support disks are retained in position by welding to the support walls of the basket. The basket accommodates GTCC waste containers in an aligned configuration in 7.82-inch square inside dimension Type 304 stainless steel tubes, which have 0.25-inch-thick walls.

1.2.1.2.8.3 Canister Transport Spacers

The fuel or GTCC waste canister is located in the NAC-STC cavity by two (2) aluminum honeycomb spacers. One spacer is installed below the canister and one above. The aluminum honeycomb is an engineered material having well-defined load-bearing and crush characteristics established by design and fabrication. The two (2) spacers have different lengths and are not interchangeable. The aluminum honeycomb is encased within a thin 6061-T6 aluminum alloy skin that precludes the entry of incidental water, contamination and foreign materials into the honeycomb structure. The spacers support the canister in all of the normal operations, but may deform during hypothetical accident events.

The bottom spacer is nominally 14 inches high and 69.0 inches in diameter. The top spacer is 28 inches high and 70.6 inches in diameter. Removable lifting lugs are used to install and remove the spacers.

1.2.1.2.8.4 Reconfigured Fuel Assembly

The reconfigured fuel assembly is designed to confine Yankee Class fuel rods, or portions thereof, which are classified as failed fuel, and to maintain the geometric configuration of those fuel rods. The assembly can accept up to 64 full length fuel rods in an eight by eight array of tubes. The assembly is designed to allow the draining of free water and the backfilling of the rods and surrounding region in helium. Since there is no significant remaining "gap activity" in the failed rods, pressure retention is not a concern.

The reconfigured fuel assembly consists of a shell (square tube with end fittings), a basket assembly that supports the 64 tubes which hold the failed rods. The shell, basket assembly and tubes are stainless steel. The spent fuel rods are confined in the fuel tubes, which are closed with end plugs. The shell is closed with top and bottom end fittings. The tube end plugs, and the shell end fittings, have drilled holes to permit draining, drying and helium backfilling.

1.2.1.3 Heat Dissipation

The NAC-STC design basis decay heat dissipation capability is 22.1 kilowatts for directly loaded fuel, 12.5 kilowatts for Yankee Class canistered fuel, and 2.9 kilowatts for Yankee class canistered GTCC waste. The directly loaded basket accommodates 26 PWR fuel assemblies with a maximum decay heat load of 0.85 kilowatts per assembly. The canistered fuel basket accommodates up to 36 assemblies, depending on assembly type. The maximum canistered fuel assembly decay heat load is 0.347 kilowatts per assembly for a canister of 36 assemblies and 0.368 kilowatts per assembly for a canister of 34 assemblies. The canistered fuel basket may also contain one or more reconfigured fuel assemblies with a maximum heat load of 0.102 kW per assembly. The use of aluminum heat transfer disks in the basket, and the use of 24 explosively bonded copper/stainless steel fins extending through the NS4FR solid neutron shield, aid in the heat transfer capability of the NAC-STC. The heat dissipation features of the NAC-STC are entirely passive. No active or support cooling mechanisms are required during transport. A detailed discussion of the thermal characteristics of the NAC-STC is provided in Chapter 3.

1.2.1.4 Coolants

There are no coolants utilized within the NAC-STC. An inert helium gas atmosphere is used to backfill the cask cavity during transport.

1.2.1.5 Shielding

A 3.7-inch thickness of Chemical Lead and a 4.4-inch total thickness of stainless steel are maintained between the cask contents and the exterior radial surface of the NAC-STC for the attenuation of gamma radiation. Additional radial shielding is provided to reduce the gamma radiation contribution above the radial neutron shield by a 0.87-inch stainless steel ring attached to the top weldment. A thickness of 5.5 inches of solid, borated neutron shielding material (NS4FR), which extends beyond the full length of the active fuel region, is provided for radial neutron shielding. The inner and outer lids provide a total thickness of 12.25 inches of stainless steel on the top end of the cask to attenuate gamma radiation from the fuel and assembly hardware. A 2.0-inch-thick disk of solid, borated NS4FR is provided in the inner lid for neutron shielding on the top end of the cask. When transporting canistered fuel, the canister shield and structural lids provide an additional total thickness of eight inches of stainless steel for

significant additional attenuation of gamma radiation at the top end of the cask. The canister shell provides an additional 0.62 inch of stainless steel shielding in the top radial direction. The

cask provides 11.65 inches of stainless steel gamma radiation shielding material and 2.0 inches of solid, borated NS4FR neutron shielding material. The bottom of the canister provides an additional one inch of stainless steel shielding at the bottom axial direction of the cask. A detailed description of the NAC-STC shielding design, as well as the shielding analysis, is provided in Chapter 5.

1.2.1.6 Protrusions

There are no outer protrusions on the NAC-STC other than the four external lifting trunnions that are welded to the top forging near the upper end of the cask. The lifting trunnions are within the envelope protected by the impact limiters. The inner lid and all of the port covers are recessed into the cask body and do not protrude above the cask surface. The outer lid forms a smooth surface with its recessed bolts. Refer to the license drawings in Section 1.3.2 for more detail.

1.2.2 Operational Features

The NAC-STC is designed for ease of operation. The cask is designed to be easily loaded, unloaded, and handled at a nuclear facility. The configuration and surface finish of the cask exterior surfaces have been designed to facilitate and minimize cask decontamination efforts. The inner and outer lids of the cask, and the port covers are all one-piece components designed to reduce handling times and to maintain personnel dose rates as low as reasonably achievable (ALARA). Quick-disconnect fittings are provided in the vent and drain ports, the inner lid interseal test port and in the interlid port for improved handling operations. All operational features are shown on the license drawings provided in Section 1.3.2. An operational schematic for the NAC-STC is shown in Figure 1.2-1. Operating procedures are provided in Chapter 7, for both canistered and directly loaded (uncanistered) fuel operations.

1.2.3 Contents of Packaging

Shipments in the NAC-STC shall not exceed the following limits:

1. The maximum contents weight of the NAC-STC shall not exceed 56,000 pounds.

2. The limits specified in Table 1.2-2 for the design basis fuels shall not be exceeded.

3. The total decay heat of the cavity contents shall not exceed 22.1 kilowatts for directly loaded fuel, and 12.5 kilowatts for canistered fuel.

4. The total weight of the fuel assemblies in the canistered configuration shall not exceed 30,600 pounds.

5. The total weight of the GTCC waste in the canistered configuration shall not exceed 12,340 pounds.

6. Any number of NAC-STCs may be shipped at one time on a railcar, a ship, a barge, or a heavy-haul vehicle.

7. Radiation levels shall not exceed the requirements of 10 CFR 71.47, 10 CFR 71.51, and IAEA Safety Series No. 6, paragraph 469.

8. Surface contamination levels shall not exceed the requirements of 10 CFR 71.87(i)(1) and IAEA Safety Series No. 6, paragraph 408.

1.2.3.1 Design Basis Spent Fuel

The NAC-STC is designed to safely transport spent fuel assemblies in two configurations. The fuel assemblies may be directly loaded into a fuel basket installed in the cask cavity (uncanistered) or sealed in a transportable storage canister (canistered). The design basis fuel assemblies for the uncanistered configuration are the Westinghouse 17 x 17 or 15 x 15 PWR fuel assemblies. These assemblies bound smaller array Westinghouse, and similar Babcock & Wilcox, and Combustion Engineering PWR fuel assemblies. The NAC-STC can transport 26 directly loaded PWR fuel assemblies. In the canistered configuration, the NAC-STC can transport up to 36 Yankee Class fuel assemblies, or up to 24 containers of Greater Than Class C (GTCC) waste.

The key parameters of the design basis spent fuel assemblies are provided in Table 1.2-2.

1.2.3.2 Greater Than Class C Waste

GTCC waste is waste whose disposal is controlled by 10 CFR 61 due to the presence of long-lived isotopes, including Ni-59, Nb-94, and C-14. GTCC waste is precluded from disposal at near-surface disposal sites. The GTCC waste consists of activated and surface contaminated metal pieces of the Yankee reactor core barrel. The physical form of the material is as a solid, activated metal. The surface contamination is consistent with exposure to reactor recirculating water or spent fuel pool water. The core barrel has been cut into sections sized to fit into stainless steel containers having external dimensions that are the same as the Yankee Class fuel assemblies. Up to 24 individual containers can be placed in the GTGC waste basket described in Section 1.2.1.2.8.2. The containers have a screened opening in each end to allow water to drain from the containers during the canister draining, drying, and inerting operations.

The principal isotopic constituents of the GTCC waste are shown in Table 1.2-3. The isotopes that primarily contribute to the radiological source term are Mn-54, Fe-55, Co-60, and Ni-63. The source terms applied in the evaluation of the GTCC waste are presented in Section 5.2.3 and Table 5.2-6.

This Page Intentionally Left Blank

Figure 1.2-1 Operational Schematic for the NAC-STC

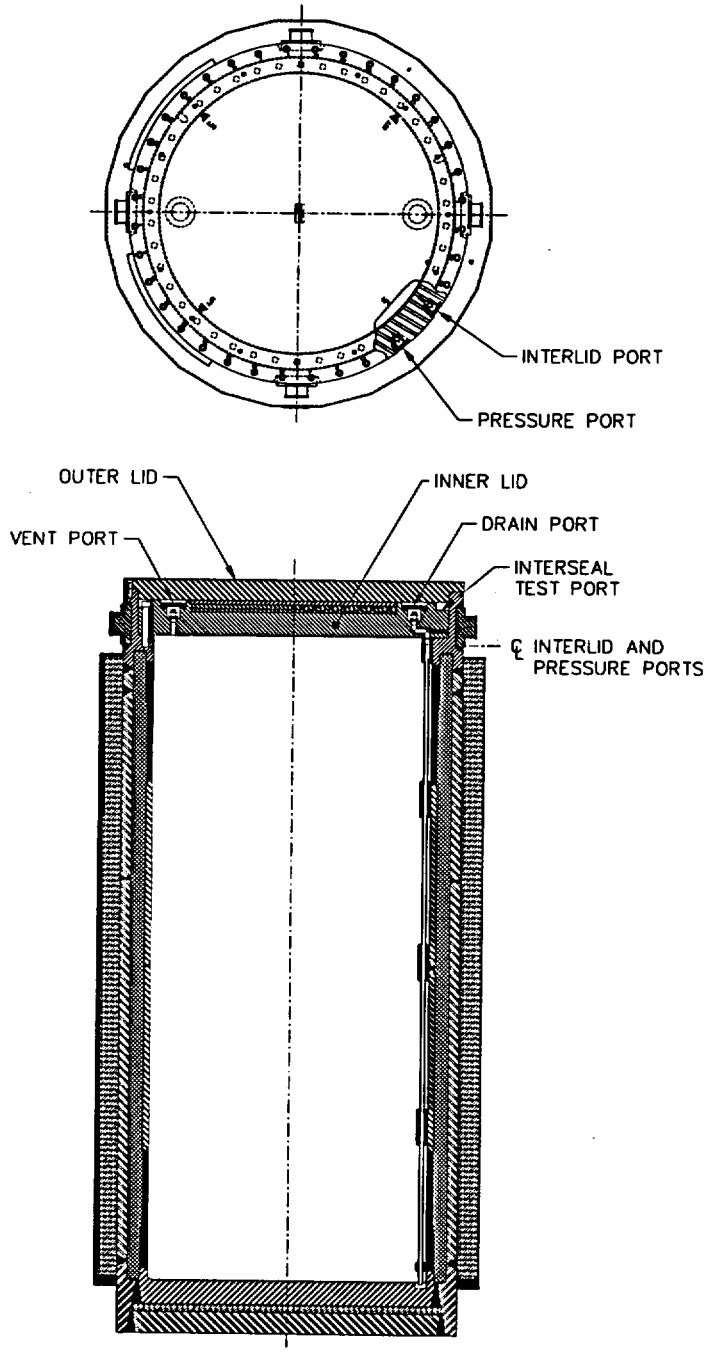

Figure 1.2-2 Reconfigured Fuel Assembly

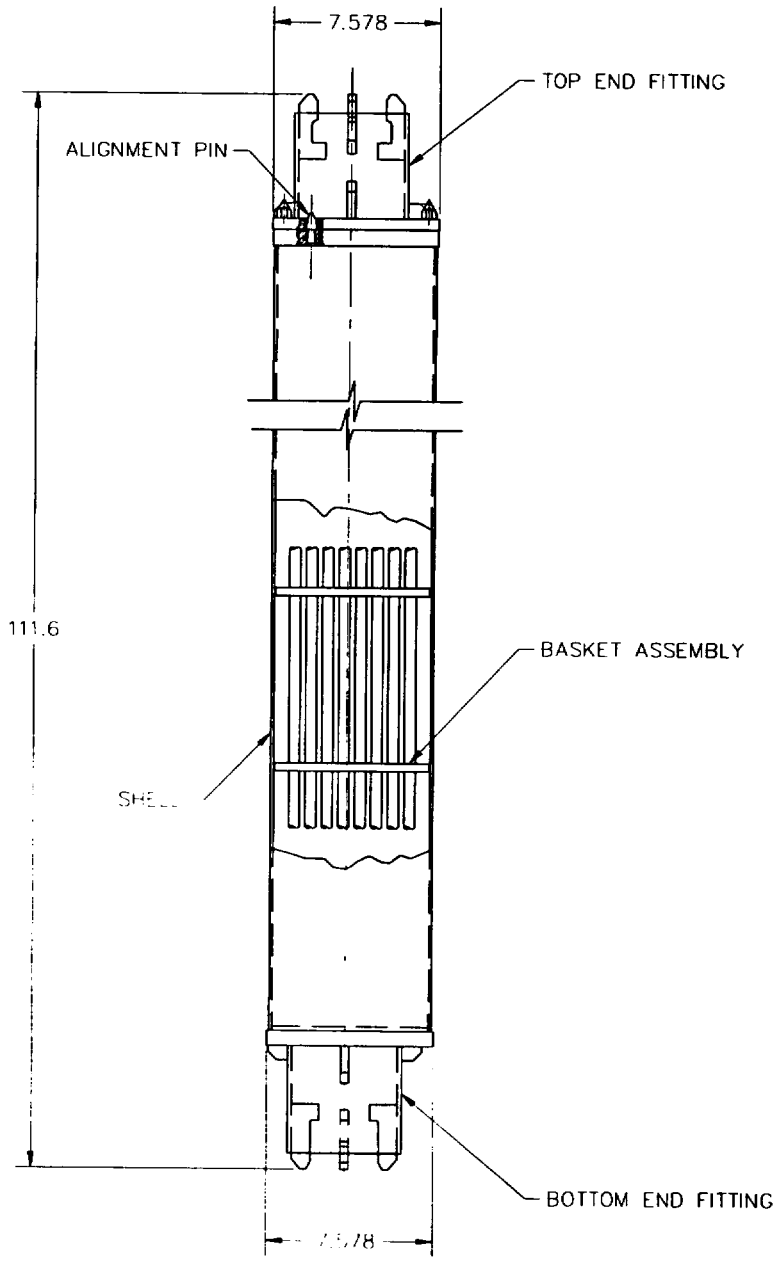

Table 1.2-1 Design Characteristics of the NAC-STC

Design Characteristic		Dimension[1]	Material
Cask	Overall Length (without impact limiters)	193.0	
Cask	Maximum Cross-Section Diameter		
	- Across Corners	99.0	
	- Across Flats	98.20	
Cask	Cavity Length	165.0	
Cask	Cavity Diameter	71.0	
Cask	Capacity		
	- Directly Loaded	26 assemblies	PWR Fuel Assemblies
	- Canistered Fuel	36 assemblies	Yankee Class (zircaloy clad)
	- Canistered Fuel	34 assemblies	Yankee Class (stainless clad)
	- Canistered GTCC Waste	24 Containers	GTCC Waste
Cask	Cavity Atmosphere		
	- Backfill Gas	---	Helium
	- Backfill Pressure	1.0 atm. abs.	
Cask	Interlid Region		
	- Backfill Gas	---	Helium
	- Backfill Pressure	1.0 atm. abs.	
Cask	Interseal Region		
	- Backfill Gas	---	Helium
	- Backfill Pressure	1.0 atm. abs.	

[1] Dimensions in inches unless otherwise noted.

This Page Intentionally Left Blank

Table 1.2-1 Design Characteristics of the NAC-STC (continued)

Design Characteristic		Dimension[2]	Material
Inner Shell	- Thickness	1.5	Type 304 Stainless Steel
Inner Shell Ring			Type XM-19 Stainless Steel
	- Shell Region Thickness	1.5	
	- Transition Region Thickness	2.0	
Gamma Shield - Thickness			Chemical Lead
	- Shell Region Thickness	4.20	
	- Transition Region Thickness	3.70 (min)	
Outer Shell - Thickness		2.65	Type 304 Stainless Steel
Top Forging - Radial Thickness at cavity diameter		7.85	Type 304 Stainless Steel
Bottom	Thickness (Total)	13.65	
	- Bottom Inner Forging	6.20	Type 304 Stainless Steel
	- Bottom Outer Forging (Radial at bottom neutron shield)	3.9	Type 304 Stainless Steel
	- Bottom Plate	5.45	Type 304 Stainless Steel
	- Neutron Shielding Material	2.00	NS4FR, Solid Synthetic Polymer

[2] Dimensions in inches unless otherwise noted.

Table 1.2-1 Design Characteristics of the NAC-STC (continued)

Design Characteristic	Dimension[3]	Material
Neutron Shield - Thickness		
- Neutron Shielding Material	5.50	NS4FR, Solid Synthetic Polymer
- Shell	0.236	Type 304 Stainless Steel
- End Plates	0.472	Type 304 Stainless Steel
Lifting Trunnion - Diameter	5.50	Type 17-4 PH Stainless Steel
Rotation Trunnion Recess - Thickness	5.75	Type 17-4 PH Stainless Steel
Inner Lid - Thickness (Total)	9.0	
- Rim and Central Region	6.0	Type 304 Stainless Steel
- Neutron Shielding Material	2.0	NS4FR, Solid Synthetic Polymer
- Coverplate	1.0	Type 304 Stainless Steel
- Bolts (42)	1-1/2 - 8 UN	SB-637, GR N07718, Nickel Alloy

[3] Dimension in inches unless otherwise noted.

Table 1.2-1 Design Characteristics of the NAC-STC (continued)

Design Characteristic	Dimension[4]	Material
Outer Lid		
- Body Thickness	5.25	Type 17-4 PH Stainless Steel
- Bolts (36)	1 - 8 UNC	SA-564, Type 630 17-4PH Stainless Steel
Port Coverplate		
- Body Thickness	1.00	Type 304 Stainless Steel
- Bolts (4)	1/2 - 13 UNC	SA-564, Type 630 17-4PH Stainless Steel
Port Cover		
- Body Thickness	1.01	Type 17-4 PH Stainless Steel
- Bolts (3)	3/8 - 16 UNC	SA-193, GR B6, Type 410 Stainless Steel
Canister Spacers		
- Top Spacer	28.0 x 70.6 (dia)	Aluminum Honeycomb with 6061-T6 Aluminum Outer Shell
- Bottom Spacer	14.0 x 68.9 (dia)	Aluminum Honeycomb with 6061-T6 Aluminum Outer Shell

[4] Dimension in inches unless otherwise noted.

Table 1.2-1 Design Characteristics of the NAC-STC (continued)

Design Characteristics	Dimension[5]	Material
Fuel Basket (Directly Loaded)		
- End Weldments (Plate)	1.0 x 70.86 dia	Type 304 Stainless Steel
- Support Disks	0.5 x 70.86 dia	Type 17-4 PH Stainless Steel
- Heat Transfer Disks	0.625 x 70.65 dia	Type 6061-T6 aluminum alloy
- Tube	8.78 x 8.78 x 0.048	Type 304 Stainless Steel encasing BORAL
- Spacer Nuts	2.5 Square	Type 17-4 PH Stainless Steel
- Threaded Rod (6)	1-5/8 - 8 UN	Type 17-4 PH Stainless Steel
Canister		
- Shell	5/8 Plate	Type 304L Stainless Steel
- Shell Bottom	1.0 Plate	Type 304L Stainless Steel
- Shield Lid	5.0 Plate	Type 304 Stainless Steel
- Structural Lid	3.0 Plate	Type 304L Stainless Steel

[5] Dimensions in inches unless otherwise noted.

Table 1.2-1 Design Characteristics of the NAC-STC (continued)

Design Characteristics	Dimension[6]	Material
Canister Fuel Basket		
- End Weldments	0.5 x 68.98 dia	Type 304 Stainless Steel
- Support Disks	0.5 x 68.98 dia	Type 17-4 PH Stainless Steel
- Heat Transfer Disks	0.5 x 68.70 dia	Type 6061-T6 Aluminum Alloy
- Tube	7.80 x 7.80 x 0.048	Type 304 Stainless Steel encasing BORAL
- Spacers	2.5 dia	Type 304 Stainless Steel
- Tie Rods (8)	1-1/8 dia	Type 304 Stainless Steel
Canister GTCC Waste Basket		
- Support Walls	2.5 thk x 111.3	Type 304 Stainless Steel
- Support Disks	1.0 thk x 68.98 dia	Type 304 Stainless Steel
- Tube	8.32 x 8.32 x 0.25	Type 304 Stainless Steel
Seals (O-Rings)		
- Inner Lid		
- Primary	0.250 dia x 72.251 dia.	Type 321 Stainless Steel
- Secondary	0.250 dia. x 73.497 dia.	Type 321 Stainless Steel
- Port Cover Plates		
- Primary	0.125 dia. x 3.875 dia.	Type 321 Stainless Steel
- Secondary	0.125 dia. x 4.500 dia.	Type 321 Stainless Steel
- Outer Lid	0.250 dia. X 82.060 dia.	Type 321 Stainless Steel
- Port Covers		
- Primary	0.103 dia. X 2.675 dia.	BTFE
- Secondary	0.103 dia. X 2.675 dia.	BTFE

[6] Dimensions in inches unless otherwise noted.

Table 1.2-2 NAC-STC Design Basis Fuel Characteristics

Parameter	Westinghouse PWR Fuel		Yankee Class Fuel		
	17 x 17	15 x 15	United Nuclear Type A	Combustion Type A	Westinghouse Type B
Number of Assemblies	26	26	36	36	34
Assembly Weight, lbs	1467	1440	850	850	900
Assembly Length, in	160	160	111.25	111.79	111.25
Active Fuel Length, in	144	144	91	91	92
Fuel Rod Cladding	Zircaloy-4	Zircaloy-4	Zircaloy	Zircaloy	Stainless Steel
Maximum Uranium, kgU	464	469	245.6	239.4	286.9
Maximum Initial U^{235}, w/o	4.2	4.2	4.0	3.9	4.94
Maximum Burnup, MWD/MTU	40,000	40,000	32,000	36,000	30,500
Maximum Assembly Decay Heat, kW	0.85	0.85	0.347	0.347	0.368
Maximum Cask Decay Heat, kW	22.1	22.1	12.5	12. 5	12.5
Minimum Cool Time, yr	6.5	6.5	21	8	24

* The NAC-STC has also been designed to accommodate directly loaded PWR assemblies with a minimum cool time of ten years and a burnup of 45,000 MWD/MTU.

** The NAC-STC also accommodates canistered fuel having a minimum cool time of 6.7 years and a burnup of 32,000 MWD/MTU.

*** Conservatively assumed maximum assembly weight is 1525 lbs. Actual assembly weights are provided for information only.

**** The Yankee Class Fuel includes United Nuclear Type A and Type B, Combustion Engineering Type A and Type B, Exxon-ANF Type A and Type B. Westinghouse Type A and Type B. The United Nuclear Type A is most reactive assembly and is used as the design basis fuel for criticality analyses. The Combustion Type A is the design basis fuel for shielding and thermal evaluations. The Westinghouse Type B fuel is the design basis fuel for structural weight considerations. A reconfigured Yankee Class fuel assembly is bounded by the Yankee Class design basis fuels.

Table 1.2-3 Isotopic Constituents of GTCC Waste

Isotope	Total Concentration (Curies)	Half Life (Years)	Decay Time (Years)	Heat Load (W)	Decayed Concentration (Curies)	Decay Energy (MeV)
Tritium	54.8	12.3	2	0.0054	49.0	0.02
Carbon-14	51.6	5730	2	0.048	51.6	0.16
Manganese-54	612	0.85	2	0.099	120.9	1.38
Iron-55	141000	2.73	2	16.2	84856	0.23
Cobalt-57	0.0	0.74	2	0.0	0.0	0.0
Cobalt-60	149000	5.271	2	1917.5	114542	2.82
Nickel-59	162	76000	2	1.03	162.0	1.07
Nickel-63	29800	100	2	11.5	29390	0.07
Antimony-125	0.03	2.758	2	0.0	0.017	0.77
Silver-110m	0.001	0.68	2	0.0	0.0	0.89
Zinc-65	9.1	0.67	2	0.0	1.14	1.35
Niobium-94	0.68	20000	2	0.0	0.7	2.10
Technetium-99	0.14	213000	2	0.0	0.14	0.29
Ruthenium-106	0.016	1.02	2	0.0	0.003	0.04
Strontium-89	0.0	0.14	2	0.0	0.0	1.46
Strontium-90	0.25	29.1	2	0.0	0.24	0.54
Iodine-129LLD	0.0001	15700000	2	0.0	0.0001	0.19
Cesium-134	0.013	2.065	2	0.0	0.007	2.06
Cesium-137	0.28	30.17	2	0.0	0.3	1.17
Cerium-144	0.01	0.78	2	0.0	0.002	8.47
Plutonium-238	0.0028	87.7	2	0.0	0.003	5.59
Plutonium-239/240	0.007	24400	2	0.0	0.007	5.24
Plutonium-241	0.25	14.4	2	0.0	0.23	0.021
Americium-241	0.004	432.7	2	0.0	0.004	5.64
Curium-242	0.0	162.8	2	0.0	0.0	6.22
Curium-243/244	0.002	29.1	2	0.0	0.002	6.15

This Page Intentionally Left Blank

Table 2.6.12.7-4 18.1-g Side Impact Stresses for 37-Degree Drop Orientation(NAC-STC PWR Basket - Directly Loaded Fuel Configuration) 2.6.12.7-16
Table 2.6.12.7-5 18.1-g Side Impact Stresses for 45-Degree Drop Orientation(NAC-STC PWR Basket - Directly Loaded Fuel Configuration) 2.6.12.7-17
Table 2.6.12.7-6 18.1-g Side Impact Stresses for 60-Degree Drop Orientation (NAC-STC PWR Basket - Directly Loaded Fuel Configuration) 2.6.12.7-18
Table 2.6.12.7-7 18.1-g Side Impact Stresses for 64-Degree Drop Orientation(NAC-STC PWR Basket - Directly Loaded Fuel Configuration) 2.6.12.7-19
Table 2.6.12.7-8 18.1-g Side Impact Stresses for 75-Degree Drop Orientation (NAC-STC PWR Basket - Directly Loaded Fuel Configuration) 2.6.12.7-20
Table 2.6.12.7-9 18.1-g Side Impact Stresses for 90-Degree Drop Orientation (NAC-STC PWR Basket - Directly Loaded Fuel Configuration) 2.6.12.7-21
Table 2.6.12.7-10 18.1-g Side Impact Analysis Results (NAC-STC PWR Basket - Directly Loaded Fuel Configuration) 2.6.12.7-22
Table 2.6.12.9-1 18.1-g Side Impact Web Stresses for 0-Degree Drop Orientation (NAC-STC PWR Basket - Directly Loaded Fuel Configuration) 2.6.12.9-3
Table 2.6.12.9-2 18.1-g Side Impact Web Stresses for 15-Degree Drop Orientation (NAC-STC PWR Basket - Directly Loaded Fuel Configuration) 2.6.12.9-4
Table 2.6.12.9-3 18.1-g Side Impact Web Stresses for 30-Degree Drop Orientation (NAC-STC PWR Basket - Directly Loaded Fuel Configuration) 2.6.12.9-5
Table 2.6.12.9-4 18.1-g Side Impact Web Stresses for 37-Degree Drop Orientation (NAC-STC PWR Basket - Directly Loaded Fuel Configuration) 2.6.12.9-6
Table 2.6.12.9-5 18.1-g Side Impact Web Stresses for 45-Degree Drop Orientation (NAC-STC PWR Basket - Directly Loaded Fuel Configuration) 2.6.12.9-7

Table 2.6.12.9-6 18.1-g Side Impact Web Stresses for 60-Degree Drop Orientation (NAC-STC PWR Basket - Directly Loaded Fuel Configuration) 2.6.12.9-8
Table 2.6.12.9-7 18.1-g Side Impact Web Stresses for 64-Degree Drop Orientation (NAC-STC PWR Basket - Directly Loaded Fuel Configuration) 2.6.12.9-9
Table 2.6.12.9-8 18.1-g Side Impact Web Stresses for 75-Degree Drop Orientation (NAC-STC PWR Basket - Directly Loaded Fuel Configuration) 2.6.12.9-10
Table 2.6.12.9-9 18.1-g Side Impact Web Stresses for 90-Degree Drop Orientation (NAC-STC PWR Basket - Directly Loaded Fuel Configuration) 2.6.12.9-11
Table 2.6.13.2-1 Real Constant Sets Defined in Canister Model 2.6.13.2-7
Table 2.6.13.2-2 Material Sets Defined in Canister Model 2.6.13.2-7
Table 2.6.13.3-1 Linearized Stresses - Thermal Only (Condition 2) 2.6.13.3-4
Table 2.6.13.4-1 Summary of Critical Sections of the Canister for the 1-Foot End Drop Condition 2.6.13.4-2
Table 2.6.13.4-2 Internal Pressure Only (20 psi) - Primary Membrane Stresses 2.6.13.4-3
Table 2.6.13.4-3 Internal Pressure Only (20 psi) - Primary Membrane Plus Primary Bending Stresses 2.6.13.4-3
Table 2.6.13.4-4 Top End Drop: 1-ft. Drop + Internal Pressure (20 psi) - Primary Membrane Stresses 2.6.13.4-4
Table 2.6.13.4-5 Top End Drop: 1-ft. Drop + Internal Pressure (20 psi) - Primary Membrane Plus Primary Bending Stresses 2.6.13.4-4
Table 2.6.13.4-6 Bottom End Drop: 1-ft. Drop + Internal Pressure (0 psi) - Primary Membrane Stresses 2.6.13.4-5
Table 2.6.13.4-7 Bottom End Drop: 1-ft. Drop + Internal Pressure (0 psi) - Primary Membrane Plus Primary Bending Stresses 2.6.13.4-5
Table 2.6.13.5-1 Bottom End Drop: 1-ft. Drop + Internal Pressure(0 psi) + Thermal (cold) 2.6.13.5-2
Table 2.6.13.5-2 Top End Drop: 1-ft. Drop + Internal Pressure (20 psi) + Thermal (cold) 2.6.13.5-2
Table 2.6.13.6-1 Side Drop: 1-ft. Drop + Internal Pressure (20 psi) - Primary Membrane Stresses 2.6.13.6-2

Table 2.7.3.2-3 Canister Pressure Stress Summary - Thermal Accident (50 psig) (Primary Membrane Stress) 2.7.3.2-5
Table 2.7.3.2-4 Canister Pressure Stress Summary - Thermal Accident (50 psig) (Primary Membrane Stress + Bending Stress) 2.7.3.2-6
Table 2.7.7.0-1 Summary of Maximum Calculated Stresses - 30-Foot Free Drop 2.7.7-2
Table 2.7.7.0-2 Summary of Maximum Calculated Stresses - Puncture 2.7.7-3
Table 2.7.7.0-3 Summary of Maximum Calculated Stresses - Thermal (Fire) Accident 2.7.7-4
Table 2.7.8.1-1 Basket 55-g Side Impact Stresses for 0-Degree Drop Orientation 2.7.8.1-24
Table 2.7.8.1-2 Basket 55-g Side Impact Stresses for 15-Degree Drop Orientation 2.7.8.1-25
Table 2.7.8.1-3 Basket 55-g Side Impact Stresses for 30-Degree Drop Orientation 2.7.8.1-26
Table 2.7.8.1-4 Basket 55-g Side Impact Stresses for 37-Degree Drop Orientation 2.7.8.1-27
Table 2.7.8.1-5 Basket 55-g Side Impact Stresses for 45-Degree Drop Orientation 2.7.8.1-28
Table 2.7.8.1-6 Basket 55-g Side Impact Stresses for 60-Degree Drop Orientation 2.7.8.1-29
Table 2.7.8.1-7 Basket 55-g Side Impact Stresses for 64-Degree Drop Orientation 2.7.8.1-30
Table 2.7.8.1-8 Basket 55-g Side Impact Stresses for 75-Degree Drop Orientation 2.7.8.1-31
Table 2.7.8.1-9 Basket 55-g Side Impact Stresses for 90-Degree Drop Orientation 2.7.8.1-32
Table 2.7.8.1-10 Summary of Basket 55-g Side Impact Analysis Results 2.7.8.1-33
Table 2.7.8.1-11 End Drop Impact (56.1 g) Basket Stresses 2.7.8.1-34
Table 2.7.8.1-12 Basket Web Stress 55-g Side Impact for 0-Degree Orientation 2.7.8.1-35
Table 2.7.8.1-13 Basket Web Stress 55-g Side Impact for 15-Degree Orientation 2.7.8.1-36

Table 2.7.8.1-14 Basket Web Stress 55-g Side Impact for 30-Degree Orientation 2.7.8.1-37
Table 2.7.8.1-15 Basket Web Stress 55-g Side Impact for 37-Degree Orientation 2.7.8.1-38
Table 2.7.8.1-16 Basket Web Stress 55-g Side Impact for 45-Degree Orientation 2.7.8.1-39
Table 2.7.8.1-17 Basket Web Stress 55-g Side Impact for 60-Degree Orientation 2.7.8.1-40
Table 2.7.8.1-18 Basket Web Stress 55-g Side Impact for 64-Degree Orientation 2.7.8.1-41
Table 2.7.8.1-19 Basket Web Stress 55-g Side Impact for 75-Degree Orientation 2.7.8.1-42
Table 2.7.8.1-20 Basket Web Stress 55-g Side Impact for 90-Degree Orientation 2.7.8.1-43
Table 2.7.8.4-10 Ten Highest Strain Points for Total Energy Analysis 2.7.8.4-10
Table 2.7.9.1-1 30-Foot Side Drop - Canistered Fuel Basket Support Disk, Primary Membrane Stresses, Extreme Cold Condition, θ = 0° 2.7.9-10
Table 2.7.9.1-2 30-Foot Side Drop - Canistered Fuel Basket Support Disk, Primary Membrane + Bending Stresses, Extreme Cold Condition, θ = 0° 2.7.9-11
Table 2.7.9.1-3 30-Foot Side Drop - Canistered Fuel Basket Support Disk, Primary Membrane Stresses, Extreme Cold Condition, θ = 22.9° 2.7.9-12
Table 2.7.9.1-4 30-Foot Side Drop - Canistered Fuel Basket Support Disk, Primary Membrane + Bending Stresses, Extreme Cold Condition, θ = 22.9° 2.7.9-13
Table 2.7.9.1-5 30-Foot Side Drop - Canistered Fuel Basket Support Disk, Primary Membrane Stresses, Extreme Cold Condition, θ = 45° 2.7.9-14
Table 2.7.9.1-6 30-Foot Side Drop - Canistered Fuel Basket Support Disk, Primary Membrane + Bending Stresses, Extreme Cold Condition, θ = 45° 2.7.9-15

Table 2.7.9.1-7 30-Foot Side Drop - Canistered Fuel Basket Support Disk, Primary Membrane Stresses, Cold Condition, θ = 0° 2.7.9-16
Table 2.7.9.1-8 30-Foot Side Drop - Canistered Fuel Basket Support Disk, Primary Membrane + Bending Stresses, Cold Condition, θ = 0° 2.7.9-17
Table 2.7.9.1-9 30-Foot Side Drop - Canistered Fuel Basket Support Disk, Primary Membrane, Cold Condition, θ = 22.9° 2.7.9-18
Table 2.7.9.1-10 30-Foot Side Drop - Canistered Fuel Basket Support Disk, Primary Membrane + Bending Stresses, Cold Condition, θ = 22.9° 2.7.9-19
Table 2.7.9.1-11 30-Foot Side Drop - Canistered Fuel Basket Support Disk, Primary Membrane Stresses, Cold Condition, θ = 45° 2.7.9-20
Table 2.7.9.1-12 30-Foot Side Drop - Canistered Fuel Basket Support Disk, Primary Membrane + Bending Stresses, Cold Condition, θ = 45° 2.7.9-21
Table 2.7.9.1-13 30-Foot End Drop - Canistered Fuel Basket Support Disk 2.7.9-22
Table 2.7.9.3-1 Summary of Buckling Interaction Coefficients for the 30-Foot Side Drop With Out of Plane Buckling (About the Weak Axis) 2.7.9-32
Table 2.7.9.3-2 Summary of Buckling Interaction Coefficients for the 30-Foot Side Drop for In-Plane Buckling (About the Strong Axis) 2.7.9-33
Table 2.7.11-1 Canister, 30-Foot Side Drop (Primary Membrane Stress) 2.7.11-5
Table 2.7.11-2 Canister, 30-Foot Side Drop (Primary Membrane Plus Primary Bending Stress) 2.7.11-5
Table 2.7.11-3 Canister, 30-Foot Bottom End Drop (Primary Membrane Stress) 2.7.11-6
Table 2.7.11-4 Canister, 30-Foot Bottom End Drop (Primary Membrane Plus Primary Bending Stress) 2.7.11-6
Table 2.7.11-5 Canister, 30-Foot Top End Drop (Primary Membrane Stress) 2.7.11-7

Table 2.7.11-6 Canister, 30-Foot Top End Drop (Primary Membrane Plus Primary Bending Stress) 2.7.11-7
Table 2.7.11-7 Summary of Minimum Margin of Safety for Canister 30-Foot Top Drop 2.7.11-8
Table 2.10.2-1 Tabulation of Circumferential Mesh Spacing - ANSYS Three-Dimensional Top and Bottom Fine Mesh Models 2.10.2-72
Table 2.10.2-2 Circumferential Plane - Percentage of 180° Arc 2.10.2-73
Table 2.10.2-3 Effective Inner Lid Bolt Properties 2.10.2-74
Table 2.10.2-4 Outer Lid Effective Bolt Properties 2.10.2-75
Table 2.10.2-5 Identification of ANSYS Model Structural Components, Materials and Allowables; Condition 1 ..... 2.10.2-76
Table 2.10.2-6 Deleted 2.10.2-77
Table 2.10.2-7 Deleted 2.10.2-78
Table 2.10.2-8 Section Cut Identification - (2-D Model) 2.10.2-79
Table 2.10.2-9 Section Cut Identification - (3-D Bottom Fine Mesh Model) 2.10.2-80
Table 2.10.2-10 Section Cut Identification - (3-D Top Fine Mesh Model) 2.10.2-81
Table 2.10.2-11 Stress Point Locations - 2-D Model 2.10.2-82
Table 2.10.2-12 Stress Point Locations - 3-D Bottom Fine Mesh Model 2.10.2-87
Table 2.10.2-13 Stress Point Locations - 3-D Top Fine Mesh Model 2.10.2-91
Table 2.10.4-1 Stress Components - 50 psig Internal Pressure + Bolt Preload; 2-D Model; Condition 1 ..... 2.10.4-7
Table 2.10.4-2 Stress Components - 12 psig Internal Pressure + Bolt Preload; 2-D Model; Condition 4 ..... 2.10.4-11
Table 2.10.4-3 Stress Components - Gravity; 1 g; 3-D Top Model; 0-Degree Circumferential Location; Condition 1 ..... 2.10.4-15
Table 2.10.4-4 Stress Components - Gravity; 1 g; 3-D Top Model; 0-Degree Circumferential Location; Condition 4 ..... 2.10.4-18
Table 2.10.4-5 Stress Components - Thermal Heat, 100°F; 2-D Model; Condition 1 ..... 2.10.4-21
Table 2.10.4-6 Stress Components - Thermal Cold, -20°F; 2-D Model; Condition 2 ..... 2.10.4-25
Table 2.10.4-7 Stress Components - Thermal Cold, -40°F; 2-D Model; Condition 4 ..... 2.10.4-29

2.1 Structural Design

2.1.1 Discussion

The NAC-STC is a cylindrical, multiwall cask designed to safely transport 26 design basis PWR fuel assemblies, or up to 36 Yankee Class fuel assemblies, or 24 containers of Greater Than Class C waste. As described in Section 2.6.14, reconfigured fuel assemblies containing failed fuel rods may be substituted for standard Yankee Class fuel assemblies in a canister containing spent fuel. The primary components of the NAC-STC are (1) the cask body—inner shell, outer shell, lead shell, and bottom; (2) the inner lid, bolts, and metallic o-rings; (3) the outer lid, bolts, and metallic o-ring; (4) the port covers, port coverplates, bolts, and o-rings; (5) the neutron shield; (6) the trunnions; (7) the transport impact limiters—upper and lower; and (8) the fuel basket. The NAC-STC primary containment boundary consists of: (1) Inner shell, and upper and lower inner shell rings (transition sections); (2) Bottom inner forging; (3) Top forging; (4) Inner lid, inner lid bolts and inner lid outer metallic o-ring; (5) Inner lid interseal test port and its threaded plug with metallic o-ring; (6) Vent port coverplate, vent port coverplate bolts, and vent port coverplate outer metallic o-ring; (7) Vent port coverplate interseal test hole threaded plug with metallic o-ring; (8) Drain port coverplate, drain port coverplate bolts, and drain port coverplate outer metallic o-ring; and (9) Drain port coverplate interseal test hole threaded plug with metallic o-ring. A detailed discussion of the containment boundary is presented in Chapter 4. The detailed geometry and the materials of fabrication of the cask components are described in Section 1.2.1 and are shown on the license drawings presented in Section 1.3.2.

The NAC-STC is designed to satisfy the requirements of 10 CFR 71 for the transport of radioactive materials (and the requirements of 10 CFR 72 for the storage of radioactive materials) and the requirements of IAEA Safety Series No. 6. The cask body holds and protects the cask cavity contents for the normal conditions of transport as well as for the hypothetical accident conditions. The lead located between the inner and outer shells provides the primary gamma radiation shielding for the cask in the radial direction. The cask bottom connects the inner and outer shells, providing for the bottom end closure as well as both gamma and neutron radiation shielding in the axial direction.

The inner lid, bolts, and metallic o-rings are the primary closure components of the NAC-STC for transport conditions. The outer lid, bolts, and metallic o-ring provide a secondary closure boundary.

The vent port and the drain port are located in the inner lid and are each protected by a port coverplate. The primary containment boundary at the vent port and at the drain port is the port coverplate and its outer metallic o-ring. The o-ring is located in the bottom surface of the port coverplate. A second metallic o-ring is also located in the bottom surface of the port coverplate, inside of, and concentric with, the primary containment, outer metallic o-ring. The seals of the metallic o-rings are tested by pressurizing the annulus between them with helium and using a "sniffer" probe to detect helium leakage at the outer circumference of the inner lid and port coverplates.

The inner lid, bolts, and outer metallic o-rings provide the primary containment boundary. The forty-two 1 1/2 - 8 UN inner lid bolts are preloaded by an installation torque to restrain rotation of the edge of the inner lid and to maintain a containment seal for the critical load condition. This condition is a uniformly distributed pressure resulting from the impact of the basket and cavity contents on the inner surface during a top end or top corner impact. The critical design load condition for the inner lid bolts, as listed in Table 2.7.1.6.2, Section 2.7.1.6, is a 55 g top corner impact (10 CFR 71 Hypothetical Accident Condition). The critical design load condition for the inner lid is the top end impact, Section 2.7.1.6.

The outer lid is bolted to the top forging by the thirty-six 1 - 8 UNC outer lid bolts, which are installed to a specified torque. The torque provides a total bolt preload that exceeds the maximum applied bolt load for the critical load condition, preventing any lid and o-ring movement that might result in a loss of secondary seal integrity. The critical design load condition for the outer lid bolts as listed in Table 2.7.1.6-4, Section 2.7.1.6, is a 49.7 g side impact (10 CFR 71 Hypothetical Accident Condition). The critical design load condition for the outer lid is the pin puncture accident condition. The NAC-STC outer lid bolts are loaded by the interlid region pressure, the o-ring compression force, and by either the impact

2.6.5.0 Vibration

The effect of vibrations normally incident to transportation is considered to be negligible for the NAC-STC. This conclusion is based on the following factors:

1. The natural frequency of the cask is conservatively calculated as 74 Hertz. This is much higher than 33 Hertz, which is normally the accepted minimum natural frequency of a rigid body.

2. The calculated stresses due to vibrations normally incident to transportation are much smaller than the calculated stresses for the normal transport 1-foot drop event.

The following analysis documents the second factor mentioned above.

The normal transport 1-foot side drop, discussed in Section 2.6.7.2, results in an impact deceleration equal to 18.12 g. This impact force produces a 4797 psi maximum stress intensity in the inner shell and a 5620 psi maximum stress intensity in the outer shell of the NAC-STC for the directly loaded fuel configuration. For the canistered fuel configuration, the maximum inner shell and outer shell stress intensities are 20.5 ksi and 18.2 ksi, respectively, for an impact deceleration of 20g. The shell stresses for the GTCC waste canister configuration will be lower than those for the fuel canister configuration due to the lower weight of the GTCC canister, although the impact deceleration may be slightly higher.

As a conservative worst case, it is assumed that the normal transport vibration acceleration is equal to the equivalent acceleration which will produce the normal vertical loading imposed on the tiedown devices by 10 CFR 71.45(b)(1). This regulation specifies a load factor of 2.0 to be applied to the package weight; therefore, it is assumed that the tiedown devices and the cask must resist an imposed 2.0 g vibration acceleration.

The maximum stress intensity range for normal transport vibration is obtained by multiplying the stress from the 1-foot side drop impact by the ratio of acceleration values from vibration to those for the drop impact. Thus the stress intensities in the outer shell (the critical component) are S_{max} = (2/18.12)(5620) = 620 psi and S_{min} = -(2/18.12)(5620) = -620 psi, and the maximum stress intensity range is S_n = 1240 psi for the directly loaded fuel configuration. For the canistered fuel configuration, the inner shell (the critical component) stress intensity for normal transport

vibration is estimated by ratioing from the 1-foot drop analysis as S_{max} = (2/20)(20.5) = 2.05 ksi psi. The allowable alternating stress intensity for austenitic stainless steel is determined as the 10^{11} cycle value from the "ASME Boiler and Pressure Vessel Code," Table I-9.2.2, ratioed for the effect of the 300°F temperature. This value is S_e = 12,975 psi; therefore, the margin of safety for the critical component of the NAC-STC in the directly loaded fuel configuration for normal transport vibration is:

$$M.S. = (S_e/S_{alt}) - 1 = (12{,}975/620) - 1 = \underline{+Large}$$

where

$$S_{alt} = 0.5\ S_n$$

The margin of safety for the inner shell for the canistered fuel configuration of the NAC-STC is

$$M.S. = (12{,}975/2050) - 1 = \underline{+Large}$$

The rotation trunnions serve as the rear tiedown for the NAC-STC during normal transport. The rotation trunnion is the critical tiedown component for all three load axes; the front of the cask is supported in a cradle and restrained vertically by a band attached to the cradle. From Section 3.5.3.3, the critical component on the rotation trunnion is the attachment weld between the trunnion and the cask outer shell, which has an applied shear stress of 15,009 psi. This applied shear stress is produced by the 10.2 g resultant from the combined longitudinal and vertical shock (10.0 g longitudinal and 2 g vertical) tiedown load components.

The same method is used to determine the maximum stress intensity range as is used for the cask, except that the ratio of the normal transport vibration acceleration to the resultant acceleration for the combined longitudinal and vertical shock was used. The allowable alternating stress for the weld is the same as that for the cask. The alternating shear stresses are S_{max} = (2/10.2)(15,009) = 2943 psi and S_{min} = -(2/10.2)(15,009) = -2943 psi, and the maximum stress intensity range is S_n = 5886 psi. The margin of safety for the rotation trunnion as a rear tiedown device for normal transport vibration is:

$$M.S. = (S_e/S_{alt}) - 1 = (12{,}975/2943) - 1 = \underline{+Large}$$

2.6.7.1 One-Foot End Drop

The NAC-STC is structurally evaluated for the normal condition of transport 1-foot end drop in accordance with the requirements of 10 CFR 71.71. In this event, the NAC-STC (equipped with an impact limiter over each end) falls through a distance of 1 foot onto a flat, unyielding, horizontal surface. The cask strikes the surface in a vertical position; consequently, an end impact on the bottom end or top end of the cask occurs. The types of loading involved in an end drop event are closure lid bolt preload, internal pressure, thermal, impact load, and inertial body load. There are six credible end impact conditions to be considered, according to Regulatory Guide 7.8:

1. Top end drop with 100°F ambient temperature, maximum decay heat load, and maximum solar insolation.

2. Top end drop with -20°F ambient temperature, maximum decay heat load, and no solar insolation.

3. Top end drop with -20°F ambient temperature, no decay heat load, and no solar insolation.

4. Bottom end drop with 100°F ambient temperature, maximum decay heat load, and maximum solar insolation.

5. Bottom end drop with -20°F ambient temperature, maximum decay heat load, and no solar insolation.

6. Bottom end drop with -20°F ambient temperature, no decay heat load, and no solar insolation.

The finite element analysis method is utilized to perform the end drop stress evaluations for the NAC-STC. The end drop condition can be analyzed using a two-dimensional axisymmetric model, because of the symmetry of both the cask structure and the loads involved in the end drop case. The cask is modeled as an axisymmetric structure using ANSYS STIF42 isoparametric elements. A detailed description of the two-dimensional finite element model of the NAC-STC is provided in Section 2.10.2.1.1.

During an impact event, the cask body will experience a vertical deceleration. Considering the cask as a free body, the impact limiter will apply the load to the cask end to produce the deceleration. Since the deceleration represents an amplification factor for the inertial loading of the cask, the equivalent static method is adopted to perform the impact evaluations. The analyses consider the behavior of the cask to be linearly elastic. Additionally, the fabrication stresses are considered to be negligible (Section 2.6.11).

Five categories of load--closure lid bolt preload, internal pressure, thermal, impact, and inertial body loads--are considered on the cask:

1. Closure lid bolt preload - The required total bolt preloads on the inner lid bolts and the outer lid bolts are 4.51×10^6 pounds and 6.02×10^5 pounds, respectively, as calculated in Section 2.6.7.5. Bolt preload is applied to the model by imposing initial strains to the bolt shafts, as explained in Section 2.6.7.5. The bolts are modeled as beam (ANSYS STIF3) elements.

2. Internal pressure - The cask internal pressure is temperature dependent and is evaluated in Section 3.4.4. Pressures of 50 psig and 12 psig are applied on the interior surfaces of the cask cavity for the hot ambient and cold ambient cases, respectively. These pressures envelope the calculated pressures for cask configurations--directly loaded fuel (12 psig), canistered fuel (11.3 psig), and canistered GTCC waste (< 11.3 psig).

3. Thermal - The thermal conditions described in Sections 3.4.2 and 3.4.3 determine the cask temperature distributions for the following three combinations of ambient temperature, heat load, and solar insolation for directly loaded fuel:

   Condition 1. 100°F ambient temperature, with maximum decay heat load, and maximum solar insolation.

   Condition 2. -20°F ambient temperature, with maximum decay heat load, and no insolation.

   Condition 3. -40°F ambient temperature, with no decay heat load, and no insolation.

The cask temperature distributions calculated for each of the three temperature conditions discussed above are used as inputs to the ANSYS analyses for the directly loaded fuel configuration. The ANSYS analysis determines the stresses arising from the thermal expansion of the cask from its initial 70°F condition, including the effects of the differential thermal growth within the components, which is a result of the temperature difference across the walls of the cask. The cask temperature distributions are also used in the ANSYS structural analyses to determine the values of the temperature-dependent material properties.

Additional heat transfer analyses performed in Sections 3.4.2 and 3.4.3 determine the cask temperature distributions for the following two conditions for the canistered fuel configuration:

Condition 4: 100°F ambient temperature, maximum decay heat load (12.5 kW);

Condition 5: -40° ambient temperature, maximum decay heat load (12.5 kW), and no solar insolation.

Due to the lower heat load (lower decay heat per inch of length), the temperature distribution for canistered fuel is enveloped by that for the directly loaded fuel configuration. The temperature distribution for the canistered GTCC waste (maximum decay heat = 2.9 kW) is also similarly enveloped.

4. Impact loads - The impact loads are induced by the impact limiter acting on the cask end during an end drop condition. The impact loads are determined from the energy absorbing characteristics of the impact limiters, as described in Section 2.6.7.4. The impact load is expressed in terms of the design cask weight (loaded or empty), multiplied by appropriate deceleration factors (g's), for details see Section 2.6.7.4.

The impact limiter load is considered to be uniformly applied over the end surface of the finite element model of the cask. The calculation of impact pressure loads is documented in Section 2.10.2.2.2. The following is a summary of the impact pressures applied to the exterior surface of the impacting end, for the different loading scenarios, with the corresponding design deceleration (g) values for the directly loaded fuel configuration.

LOADING CONDITION	IMPACT PRESSURE FOR 1 g	DECELERATION (g)
Top end impact with basket and fuel	42.48 psi	20.0
Top end impact with basket, no fuel	35.86 psi	20.0
Bottom end impact with basket and fuel	42.35 psi	20.0
Bottom end impact with basket, no fuel	35.74 psi	20.0

For the end impact, with directly loaded fuel and basket a uniform pressure of 847 psi [42.35 psi x (20 g/1 g)] is applied on the exterior surface of the end of the finite element model of the cask. This pressure value is calculated by dividing the total impact load [(20 g/1 g)(250,000 lb) = 5.0 x 10^6 lb)] by the impact area [(π)(43.35)^2 = 5903.8 in^2] which is the surface area of the end of the cask.

It should be noted that the design weight of the cask is 250,000 pounds, which includes the weight of the empty cask (194,000 lb), plus the weight of the cavity contents (56,000 lb) for the directly loaded fuel configuration. For those load conditions for which the cask contains no fuel, the basket (design weight 17,000 lb) is still considered to be in the cask, resulting in a weight of 211,000 pounds for the empty cask with basket. The weights of the cavity contents for the canistered fuel and the canistered GTCC waste configurations are 55,590 pounds and 54,271 pounds, respectively, with the empty cask weight being 194,000 pounds; thus, the weights of the alternate configurations are enveloped by those of the directly loaded fuel configuration.

5. Inertial body load - The inertial effects, which occur during the end impact are represented by equivalent static forces, in accordance with D'Alembert's principle. Inertial body load includes the weight of the empty cask (194,000 lb) and the weight of the cavity contents (56,000 lb) for the directly loaded fuel configuration, which envelopes that of the canistered fuel or the canistered GTCC waste.

Inertial loads resulting from the weight of the empty cask are imposed by applying an appropriate deceleration factor to the cask mass. The applied decelerations are determined by considering the crush strength and the geometry of the impact limiter, as explained in Section 2.6.7.4.

analysis results. As described in Section 2.10.4, the nodal stresses are documented on the representative section cuts. Stress results for the 1-foot top and bottom end drop combined loading conditions discussed above are documented in Tables 2.10.4-37 through 2.10.4-64. These tables document the primary, primary plus secondary, primary membrane (P_m), primary membrane plus primary bending ($P_m + P_b$), primary plus secondary membrane plus bending (S_n), and critical P_m, $P_m + P_b$, and S_n stresses in accordance with the criteria presented in Regulatory Guide 7.6. As described in Sections 2.10.2.3 and 2.10.2.4, procedures have been implemented to document the nodal and sectional stresses as well as to determine the critical (maximum) stress summary for all cask components.

For the 1-foot top end drop impact loading case, the maximum calculated membrane plus bending stress intensity is 19.3 ksi. By comparison, for the combined loading case, including impact, bolt preload, and internal pressure; the maximum calculated primary membrane plus bending stress intensity is 20.7 ksi. The maximum stress intensities due to impact alone are equal to 93 percent of the maximum primary stress intensities due to the combined loading. Therefore, it is concluded that the impact stresses are the governing factor for the 1-foot end drop condition.

For the 1-foot top end drop scenario, ANSYS analyses were performed at the three different temperature conditions outlined above for the directly loaded fuel configuration of the cask. The results from these three analyses show that the maximum $P_m + P_b$ stress intensities are 20.7 ksi, 20.0 ksi, and 18.0 ksi. These three stress results are essentially identical, with the difference between them being less than 13 percent. Since the allowable stress for a component is a function of the component temperature, with higher temperatures resulting in lower allowable stresses, the allowable stress will be lowest for temperature condition 1 because the highest component temperatures occur for that condition. As a result, the margins of safety are smallest for the analysis for temperature condition 1. The minimum margins of safety for the three temperature conditions are +0.4, +0.5, +0.7, respectively. Therefore, it is concluded that the stress results from temperature condition 1 are the most critical for the top end drop accident conditions.

A similar set of ANSYS analyses was performed for the 1-foot bottom end drop case. The maximum $P_m + P_b$ stress intensities for the 1-foot bottom end drop are 13.8 ksi, 14.0 ksi, and 14.1 ksi. The maximum $P_m + P_b$ stress intensities for the bottom end drop are all lower than those for the top end drop. Hence, the top end drop condition is the most critical of the two.

As shown in Tables 2.10.4-37 through 2.10.4-64, the margins of safety for the primary stress intensity category are positive for all of the 1-foot end drop conditions. The most critically stressed component in the system is the inner lid, for the top end drop. The minimum margin of safety for $P_m + P_b$ stress intensity, for the top end drop condition, is found to be ±0.4, as documented in Table 2.10.4-43. The minimum margin of safety for $P_m + P_b$ stress intensity, for the bottom end drop condition is found to be ±1.1, as documented in Table 2.10.4-60. The locations of the most critical sections for each cask component are provided in the critical stress summary tables.

Regulatory Guide 7.6 requires that the range of primary plus secondary stress intensities between any two normal conditions of transport be less than 3.0 S_m. Therefore, it is necessary to evaluate the range of primary plus secondary stress intensities between all of the normal conditions of transport, including heat, cold, 1-foot end drop, 1-foot side drop, and 1-foot corner drop conditions. A simple, straightforward, and very conservative method of showing compliance with the 3.0 S_m criterion is to establish an allowable stress limit criterion of 1.5 S_m for the range of primary plus secondary stress intensities between each normal condition and the ambient condition. If the 1.5 S_m allowable stress limit criterion is satisfied at all locations within the cask, then all pairs of normal conditions will satisfy the 3.0 S_m stress range criterion.

Tables 2.10.4-44 and 2.10.4-64 document the range of primary plus secondary stress intensities between the 1-foot end drop condition and the unloaded, ambient condition, for the top and bottom end drops, respectively. The maximum primary plus secondary stress intensity range (S_n) for the top end drop is 21.6 ksi, which is less than 1.5 S_m. The maximum primary plus secondary stress intensity range (S_n) for the bottom end drop is 15.9 ksi, which is also less than 1.5 S_m. In conjunction with the 1.5 S_m criterion for the stress range between the ambient condition and each of the other normal conditions, it is therefore concluded that the NAC-STC satisfies the 3.0 S_m criterion for the primary plus secondary stress intensity range for the 1-foot end drop load conditions.

The fatigue evaluation of the NAC-STC in Section 2.1.3.2 documents that the requirements of Regulatory Guide 7.6 are satisfied, since the 3.0 S_m criterion for the primary plus secondary stress intensity range is satisfied for the 1-foot end drop condition.

The documentation of the adequacy of the NAC-STC to satisfy the buckling criteria for the stresses of the 1-foot end drop condition is presented in Section 2.10.5.

The load on each of the 16 retaining rods due to the normal transportation acceleration is, from Section 2.6.7.4.[redacted]1.1, 4156 pounds. The bearing area between the bearing plate and the redwood material is calculated as:

$$A = (\pi/4)(5.0^2 - 3.0^2) = 12.57 \text{ in}^2$$

The bearing pressure is:

$$p = 4156/12.57 = 331 \text{ psi}$$

The perpendicular-to-the-grain compressive stress in the redwood at 40 percent strain is 1260 psi. The margin of safety for compression of the redwood is:

$$\text{M.S.} = 1260/331 - 1 = \underline{+\text{Large}}$$

The washer is made of Type 304 stainless steel. It has a 1.09-inch diameter hole in the center. It is analyzed by assuming that it is simply supported along a circle having a diameter equal to the average of the diameters of the washer and the edge of the hole in the bearing plate [(5.0 + 3.00)/2 = 4.0 inches]. The load of 4156 pounds is distributed along the edge of the nut having an average diameter of 1.625 inches. From Roark, page 220, Case 15:

$$S_{max} = 22{,}368 \text{ psi}$$

where

$a = 2.50$ in
$b = 0.545$ in
$c = 2.00$ in
$d = 0.8125$ in
$t = 0.50$ in

$v = 0.275$

$m = = 3.636$

$W = 4156$ lb

The yield strength of Type 304 stainless steel is 25.0 ksi at 200°F. The margin of safety is calculated as:

$$M.S. = 25.0/22.4 - 1 = \underline{+0.11}$$

The positive margins of safety show that the attachment of the impact limiters is adequate during normal conditions of transport.

2.6.7.4.7.1.3 Evaluation of Impact Limiter Attachment for Vibration

During normal transport conditions, the impact limiter attachment may be subjected to vibration induced from the combination of component natural frequency and a dynamic load forcing function dependent on the transport media. Design of the impact limiter attachment eliminates the potential for the postulated vibration loading loosening the impact limiter attachment. Lock nuts are installed in back of each of the retaining rod attachment nuts to prevent them from becoming loose. Locking wires installed between sets of two retaining rods eliminates rotation of the impact limiter retaining rods relative to their anchorage. The combination of these two design features eliminates the potential for the impact limiter attachment from becoming loose as a result of postulated vibration loading during transport.

2.6.13.2 Finite Element Model Description - Canister

A finite element model of the canister was constructed using ANSYS solid (SOLID45) elements. The model represents a one-half (180°) section of the canister and basket. The basket support discs were modeled with three-dimensional shell (SHELL63) elements. The model uses gap-spring elements to simulate contact between adjacent components. Interaction between the basket and canister were accomplished using three-dimensional gap elements (CONTACT52) along the periphery of the support disks. Contact between the canister and the cask inner shell is also modeled using CONTACT52 gap elements. Contact between the canister structural lid and shield lid is modeled using COMBIN40 combination elements in the axial degree of freedom. Simulation of the backing ring is accomplished using a ring of COMBIN40 spring gap elements connecting the shield lid and the canister in the axial direction at the lid lower outside radius. In addition, CONTACT52 elements are used to model interaction between the structural lid and canister shell and the shield lid and canister shell just below the respective lid weld joints. The size of the CONTACT52 gaps were determined from the nominal dimensions of contacting components. The COMBIN40 elements used between the structural and shield lids and for the backing ring were assigned small gap sizes of 1E-8 inches. All gap-spring elements are assigned a stiffness of 1E8 lb/in.

A central hole was modeled in the bottom, shield and structural lids. These holes were then filled with solid elements. This technique was used to avoid a small hole (which can cause a stress concentration) or a series of degenerate solid elements (which can produce a region of excessive stiffness).

Spring elements were inserted over the gap elements located on the model symmetry plane to help stabilize the model during solutions phases. The springs were given a low stiffness of 10 lb/in so their presence would not adversely affect the accuracy of the solutions.

Boundary conditions were applied to enforce symmetry at the cut boundary of the model. All nodes on the cask shell side of the canister to cask spring gap elements were fixed in all degrees of freedom. In addition, the axial and inplane rotational degrees of freedom of the basket nodes were fixed.

Additionally, the structural analyses of the canister were performed with temperature distributions corresponding to the hot (100°F ambient with solar heat load) and cold (-40°F ambient) external conditions.

Table 2.6.13.2-1 lists the real constants assigned to specific components of the model. Table 2.6.13.2-2 lists the material properties used for the model.

Figure 2.6.13.2-1 is a plot of the entire canister finite element model. An isolated view of the canister shield and structural lids portion of the model is presented in Figure 2.6.13.2-2 and an enlarged view of the model in the structural lid and shield lid weld regions is shown in Figure 2.6.13.2-3. The canister bottom plate portion of the model is shown in Figure 2.6.13.2-4.

The loading for the normal operating condition is based on 1-foot drops in conjunction with the internal pressure loading (to the canister). Drop orientations considered are the end and side drops. In the end drop orientation, the fuel contents load is transferred to the canister end and directly to the transport cask end through the cavity spacer. This corresponds to a compressive stress in the canister ends which is present in the finite element model. For the side drop condition, the loads from the canister contents weight is transferred through the support disks into the canister wall, which is backed by the NAC-STC inner shell. Since the canister wall and the inner shell have different radii, a gap exists between the two surfaces. This results in the load passing only through regions in which the canister shell deflects to contact the inner shell. This load pattern is reflected in the side drop analysis. The operational conditions also contain loads developed from the temperature distribution in the canister. These are included in the canister model analyses.

2.6.13.4 Stress Evaluation of the Canister for 1-Foot End Drop Load Condition

A structural analysis is performed using ANSYS to evaluate the effect of a 1-foot end drop impact for both the bottom and top end orientations of the canister. The ASME code, Section III, NB requires the stresses arising from operational loads be assessed based on the primary loads. The primary loads for the 1-foot drop are due to the deceleration of the canister and its contents (56,000 pounds) and the conservatively assumed 20 psig pressure load internal to the canister. The applied deceleration is 20g's for both orientations. The inertial load of the canister was addressed by the deceleration factor applied to the canister density, while the fuel weight (30,600 pounds) was represented by a pressure load on the inner end surface of the canister. Displacement constraints are applied to the plane of symmetry and the gap elements attached at the canister end to represent the top or bottom of the transport cask.

To determine the effect of the 20 psig pressure load, the top end and bottom end orientations with and without the pressure load were analyzed. The maximum stresses are summarized below:

Drop Orientation	Internal Pressure (psi)	Maximum Stress Intensity (ksi)
Bottom End Drop	0	4.6
Bottom End Drop	20	3.0
Top End Drop	0	7.6
Top End Drop	20	12.5

It is concluded that the bottom end drop without pressure is limiting for the bottom end drop orientation. For the top end drop, the addition of pressure is limiting.

The location of the linearized stresses are shown in Figure 2.6.13.3-1. The maximum stresses for P_m and P_m+P_b are tabulated in Tables 2.6.13.4-2 through 2.6.13.4-7. The critical sections for the pressure and the pressure plus the deceleration load, with reference to the section and the appropriate tables, are shown in Table 2.6.13.4-1. The margins of safety in these tables are calculated as: M.S. = (allowable stress/S.I.) - 1.

Table 2.6.13.4-1 Summary of Critical Sections of the Canister for the 1-Foot End Drop Condition

Condition	Stress	Critical Section	Table	Minimum Margin of Safety
Pressure (only)	P_m	1	2.6.13.4-2	+ 1.43
Pressure (only)	$P_m + P_b$	2	2.6.13.4-3	+ 0.39
Top End Drop				
Pressure + Inertia	P_m	1	2.6.13.4-4	+ 2.95
Top End Drop				
Pressure + Inertia	$P_m + P_b$	2	2.6.13.4-5	+ 1.25
Bottom End Drop				
Pressure + Inertia	P_m	2	2.6.13.4-6	+ 7.29
Bottom End Drop				
Pressure + Inertia	$P_m + P_b$	5	2.6.13.4-7	+ 4.70

2.6.14 Canistered Fuel Basket Analysis-Normal Conditions of Transport

The NAC-STC canistered fuel basket for Yankee class fuel is designed to accommodate up to 36 fuel assemblies. The basket is a right cylinder structure and is fabricated with the following components: 36 square fuel tubes, 22 circular support disks, 14 heat transfer disks, 8 tie rods with split spacers, and two end weldment plates. The basket components and their geometry are illustrated in Figure 2.6.14-1 and Figure 2.6.14-2. Each fuel tube has a 7.80-inch square inside dimension, 0.141-inch thick composite wall, and holds the design basis Yankee Class fuel assembly. Figure 2.6.14-3 shows the details of the stainless steel tube with the encased BORAL. The fuel tubes are open at each end; therefore, longitudinal fuel assembly loads are imparted to the cask body and not the fuel basket structure. The fuel assemblies, together with the tubes are laterally supported in the holes in the stainless steel support disks. Each support disk is 0.5 inches thick, 68.98 inches in diameter and has 37 holes that are each 8.254 inches square. There are three web thicknesses in the support disks; 0.875 inch, 0.810 inch, and 0.75 inch. The widest web is nearest the center of the basket, the web decreases in width towards the outer radius of the basket. The support disks are equally spaced at 4.41 inches except for the disk nearest the bottom weldment, which is spaced 6.50 inches from the bottom weldment plate. The tie rod has 3.0 inches of 1-1/8-8 UN-2B threads at the upper end of the rod, which corresponds to the top of the basket. Fourteen (14) aluminum heat transfer disks are located at the mid-section of the cavity to fully optimize the passive heat rejection from the package. Each heat transfer disk is 0.50 inch thick, 68.70 inches in diameter, and has 37 holes that are 8.224 inches square. There are three different web widths, 0.905 inches, 0.84 inches and 0.78 inches. The widest aluminum web is nearest the center of the basket to optimize the passive heat rejection. The dimensional differences between the heat transfer disk and the support disk accommodates the different rate of thermal growth between aluminum and stainless steel preventing interference between the tube, the support disk, and heat transfer disks. The heat transfer disks, which serve no structural function, are supported by the eight tie rods with split spacers. The center hole of the support and heat transfer disks is not accessible as the center hole position is blocked by the top end weldment plate, which has only 36 fuel tube positions.

The fuel basket contains the fuel and is laterally supported by the canister shell. The 22 support disks and two (2) end plates are fabricated from 17-4 PH and Type 304 stainless steels, respectively. The 14 heat transfer disks are fabricated from Type 6061-T6 aluminum alloy. The 36 fuel tubes are fabricated from Type 304 stainless steel. The tie rods and spacers are fabricated from Type 304 stainless steel. The stainless steel tubes are not considered to be a structural component with respect to the disks and are not included in the basket or weldment analyses. The primary function of the split spacers and the threaded top nut is to locate and structurally assemble the support disks, heat transfer disks and the top and bottom weldment plates into an integral assembly. The spacers carry the inertial weight of the support disks, heat transfer disks, one end plate, and their own inertial weight for a normal transport condition 1-foot end drop. The end drop loading of the split spacers and tie rods represent a classical closed form structural analysis. Therefore the only component that requires a detailed finite element analysis is the support disk.

The fuel basket is evaluated for the normal transport loads in this section and is evaluated for the hypothetical accident condition in Section 2.7.9.

The canistered fuel basket may contain one or more reconfigured fuel assemblies which are designed to confine Yankee Class spent fuel rods, or portions thereof, which are classified as failed, and to maintain the geometry of the rods. The total number of full length rods that can be placed in the reconfigured fuel assembly is less than that in a standard Yankee Class fuel assembly (64 rods versus 256 rods). Consequently, the effects of a reconfigured fuel assembly placed in a canister (e.g. criticality, weight, thermal output, source term) are significantly less than the effects of a design basis (standard) Yankee Class fuel assembly. Consequently, reconfigured fuel assemblies may replace standard Yankee Class fuel assemblies on a one-for-one basis in any spent fuel canister.

The reconfigured fuel assembly is designed to the requirements of the ASME Code, Section III, Article NG-3000, to NUREG/CR-6322, "Buckling Analysis of Spent Fuel Baskets," and to the additional guidance contained in ASME Section III, Article NF-3000 and Appendix F.

The assembly has been evaluated for normal conditions of transport, and is capable of withstanding, within the Code allowable limits (Service Level A/B), a postulated end drop resulting in a deceleration of 20g. It is also, when located in a fuel slot in the canister, capable of withstanding, within Code allowable limits (Service Level A/B), a postulated side drop resulting in a deceleration of 20 g.

The assembly has also been evaluated for accident conditions and is capable of withstanding, within Code allowable limits (Service Level D), a postulated end drop resulting in a deceleration of 57 g. It is also, when located in a fuel slot in the canister, capable of withstanding, within Code allowable limits (Service Level D), a postulated side drop resulting in a deceleration of 65 g.

This Page Intentionally Left Blank

Table 2.6.14.7-1 Listing of the Cross Sections for the Stress Evaluations of the Support Disk (Continued)

Section #	Point 1	Point 2	Node 1	Node 2	X1	Y1	X2	Y2
12	223	224	7231	7232	31.32	4.13	34.24	4.13
13	225	226	7233	7234	31.32	4.13	31.32	5
14	227	228	7235	7236	31.32	5	34.13	5
15	229	230	7237	7238	31.32	13.26	31.76	13.44
16	231	232	7239	7240	4.13	4.13	5	4.13
17	233	234	7241	7242	5	4.13	5	5
18	235	236	7243	7244	5	5	4.13	5
19	237	238	7245	7246	4.13	5	4.13	4.13
20	239	240	7247	7248	4.13	13.26	5	13.26
21	241	242	7249	7250	5	13.26	5	14.07
22	243	244	7251	7252	5	14.07	4.13	14.07
23	245	246	7253	7254	4.13	14.07	4.13	13.26
24	247	248	7255	7256	4.13	22.32	5	22.32
25	249	250	7257	7258	5	22.32	5	23.07
26	251	252	7259	7260	5	23.07	4.13	23.07
27	253	254	7261	7262	4.13	23.07	4.13	22.32
28	255	256	7263	7264	4.13	31.32	5	31.32
29	257	258	7265	7266	4.13	31.32	4.13	34.24
30	259	260	7267	7268	5	31.32	5	34.13
31	261	262	7269	7270	13.26	4.13	14.07	4.13
32	263	264	7271	7272	14.07	4.13	14.07	5
33	265	266	7273	7274	14.07	5	13.26	5
34	267	268	7275	7276	13.26	5	13.26	4.13
35	269	270	7277	7278	13.26	13.26	14.07	13.26
36	271	272	7279	7280	14.07	13.26	14.07	14.07
37	273	274	7281	7282	14.07	14.07	13.26	14.07
38	275	276	7283	7284	13.26	14.07	13.26	13.26
39	277	278	7285	7286	13.26	22.32	14.07	22.32
40	279	280	7287	7288	13.26	22.32	13.26	23.07
41	281	282	7289	7290	13.26	31.32	13.44	31.76
42	283	284	7291	7292	22.32	4.13	23.07	4.13
43	285	286	7293	7294	23.07	4.13	23.07	5
44	287	288	7295	7296	23.07	5	22.32	5
45	289	290	7297	7298	22.32	5	22.32	4.13
46	291	292	7299	7300	22.32	13.26	23.07	13.26
47	293	294	7301	7302	22.32	13.26	22.32	14.07
48	295	296	7303	7304	22.32	22.32	24.39	24.39

Table 2.6.14.7-1 Listing of the Cross Sections for the Stress Evaluations of the Support Disk (Continued)

Section #	Point 1	Point 2	Node 1	Node 2	X1	Y1	X2	Y2
149	297	298	7305	7306	-31.32	-4.13	-34.24	-4.13
150	299	300	7307	7308	-31.32	-4.13	-31.32	-5
151	301	302	7309	7310	-31.32	-5	-34.18	-5
152	303	304	7311	7312	-31.32	-13.26	-31.76	-13.44
153	305	306	7313	7314	4.13	0	5	0
154	307	308	7315	7316	13.26	0	14.07	0
155	309	310	7317	7318	22.32	0	23.07	0
156	311	312	7319	7320	4.13	9.13	5	9.13
157	313	314	7321	7322	13.26	9.13	14.07	9.13
158	315	316	7323	7324	22.32	9.13	23.07	9.13
159	317	318	7325	7326	4.13	18.19	5	18.19
160	319	320	7327	7328	13.26	18.19	14.07	18.19
161	321	322	7329	7330	4.13	27.2	5	27.2
162	323	324	7331	7332	-4.13	0	-5	0
163	325	326	7333	7334	-13.26	0	-14.07	0
164	327	328	7335	7336	-22.32	0	-23.07	0
165	329	330	7337	7338	-4.13	9.13	-5	9.13
166	331	332	7339	7340	-13.26	9.13	-14.07	9.13
167	333	334	7341	7342	-22.32	9.13	-23.07	9.13
168	335	336	7343	7344	-4.13	18.19	-5	18.19
169	337	338	7345	7346	-13.26	18.19	-14.07	18.19
170	339	340	7347	7348	-4.13	27.2	-5	27.2
171	341	342	7349	7350	-4.13	-9.13	-5	-9.13
172	343	344	7351	7352	-13.26	-9.13	-14.07	-9.13
173	345	346	7353	7354	-22.32	-9.13	-23.07	-9.13
174	347	348	7355	7356	-4.13	-18.19	-5	-18.19
175	349	350	7357	7358	-13.26	-18.19	-14.07	-18.19
176	351	352	7359	7360	-4.13	-27.2	-5	-27.2
177	353	354	7361	7362	4.13	-9.13	5	-9.13
178	355	356	7363	7364	13.26	-9.13	14.07	-9.13
179	357	358	7365	7366	22.32	-9.13	23.07	-9.13
180	359	360	7367	7368	4.13	-18.19	5	-18.19
181	361	362	7369	7370	13.26	-18.19	14.07	-18.19
182	363	364	7371	7372	4.13	-27.2	5	-27.2
183	365	366	7373	7374	0	4.13	0	5
184	367	368	7375	7376	0	13.26	0	14.07
185	369	370	7377	7378	0	22.32	0	23.07

Table 2.6.14.7-1 Listing of the Cross Sections for the Stress Evaluations of the Support Disk (Continued)

Section #	Point 1	Point 2	Node 1	Node 2	X1	Y1	X2	Y2
186	371	372	7379	7380	9.13	4.13	9.13	5
187	373	374	7381	7382	9.13	13.26	9.13	14.07
188	375	376	7383	7384	9.13	22.32	9.13	23.07
189	377	378	7385	7386	18.19	4.13	18.19	5
190	379	380	7387	7388	18.19	13.26	18.19	14.07
191	381	382	7389	7390	27.2	4.13	27.2	5
192	383	384	7391	7392	9.13	4.13	9.13	5
193	385	386	7393	7394	9.13	13.26	9.13	14.07
194	387	388	7395	7396	9.13	22.32	9.18	23.07
195	389	390	7397	7398	18.19	4.13	18.19	5
196	391	392	7399	7400	18.19	13.26	18.19	14.07
197	393	394	7401	7402	27.2	4.13	27.2	5
198	395	396	7403	7404	0	4.13	0	5
199	397	398	7405	7406	0	13.26	0	14.07
200	399	400	7407	7408	0	22.32	0	23.07
201	401	402	7409	7410	9.13	4.13	9.13	5
202	403	404	7411	7412	9.13	13.26	9.13	14.07
203	405	406	7413	7414	9.13	22.32	9.13	23.07
204	407	408	7415	7416	18.19	4.13	18.19	5
205	409	410	7417	7418	18.19	13.26	18.19	14.07
206	411	412	7419	7420	27.2	4.13	27.2	5
207	413	414	7421	7422	9.13	4.13	9.13	5
208	415	416	7423	7424	9.13	13.26	9.13	14.07
209	417	418	7425	7426	9.13	22.32	9.13	23.07
210	419	420	7427	7428	18.19	4.13	18.19	5
211	421	422	7429	7430	18.19	13.26	18.19	14.07
212	423	424	7431	7432	27.2	4.13	27.2	5

Table 2.6.14.7-2 Summary of P_m Stresses for the Canistered Basket Support Disk, 1 Foot Side Drop, 0° Orientation, Thermal Condition 2

Sect.	SX	SY	SXY	Stress Inten.	Stress Allow.	Margin of Safety
31.	-13.4	14.8	-.1	28.2	44.0	.56
70.	-13.1	14.8	.6	27.9	44.8	.60
59.	-10.6	11.1	.4	21.7	42.5	.95
20.	-11.0	11.2	.0	22.2	45.0	1.03
191.	-17.0	.0	.0	17.0	45.0	1.65
212.	-16.6	.0	-.5	16.7	45.0	1.70
77.	-16.2	-6.2	-1.9	16.6	44.8	1.70
39.	-13.0	-11.3	4.0	16.3	44.8	1.75
79.	-7.3	8.3	-.1	15.6	43.5	1.79
5.	-9.3	5.9	-.3	15.1	42.4	1.80
117.	-6.9	8.2	.4	15.1	43.5	1.88
67.	-7.4	7.0	.9	14.5	42.5	1.93
30.	-8.0	7.0	.3	15.0	44.4	1.96
28.	-7.9	7.1	-.3	14.9	44.4	1.97
69.	-8.1	7.0	.3	15.0	44.8	1.98
44.	-8.9	5.8	.6	14.8	44.9	2.04
189.	-14.4	-.1	.0	14.4	44.0	2.06
94.	-5.2	8.9	.0	14.2	44.8	2.16
132.	-4.9	8.7	.4	13.6	43.6	2.20
29.	-13.7	-7.4	-.1	13.7	44.0	2.21
210.	-14.0	-.1	-.4	14.0	45.0	2.22
33.	-8.2	5.8	-.1	13.9	45.0	2.23
24.	-6.6	6.6	-.2	13.2	42.8	2.24
68.	-13.4	-7.5	.5	13.5	44.8	2.33
32.	-5.6	7.0	.0	12.6	43.6	2.45
37.	-12.8	-.6	.0	12.8	44.5	2.48
75.	-12.8	-1.7	.2	12.8	45.0	2.52
186.	-11.8	.0	.2	11.8	44.4	2.78
107.	-3.5	-11.7	.0	11.7	45.0	2.86
145.	-3.2	-11.5	.4	11.5	44.8	2.89
17.	-7.8	3.3	-.5	11.1	43.6	2.92
18.	-11.5	-8.5	-.1	11.5	45.0	2.93
207.	-11.4	.0	-.4	11.4	45.0	2.95
105.	-3.1	8.2	.0	11.4	45.0	2.95
57.	-11.1	-8.4	.5	11.2	45.0	3.01
71.	-4.6	6.4	.5	11.0	44.8	3.06
143.	-2.8	8.2	.4	11.0	44.9	3.09
183.	-10.3	.0	.2	10.3	42.8	3.16
58.	-6.7	3.3	.1	9.9	42.4	3.27
26.	-4.0	5.8	.1	9.8	43.5	3.44
3.	-9.5	-5.7	-.3	9.5	42.4	3.45
198.	-9.9	.0	-.5	9.9	44.2	3.46
56.	-6.7	3.2	.9	10.0	45.0	3.50
119.	-7.6	-9.2	.3	9.3	42.5	3.59
9.	-4.7	4.7	-.2	9.5	43.5	3.60

2.6.16.1 Method of Analysis

The adequacy of the GTCC waste basket is evaluated in accordance with the ASME Code Section III, Subsection NF (component supports) for 1-ft side and end drops (Normal Conditions of Transport) and 30-ft side and end drops (Accident Conditions). Since the total weight of the cavity contents of the canistered GTCC waste basket configuration is less than that of the directly loaded fuel basket configuration, the decelerations (g-loads) developed in Section 2.6.7.4 are applicable to the structural evaluation of the GTCC waste basket. A load amplification factor of 20 g is used for the 1-ft side and end drop analyses. Load amplification factors of 55 g and 56.1 g are used for the 30-ft side drop and 30-ft end drop accident analyses, respectively.

The minimum ratio of loads for the 30-ft and 1-ft drops is 55/20 = 2.75. In comparing the allowables for accident condition stresses to the allowables for normal conditions of transport stresses, the maximum increase of allowable is 1.7 (NF-3341.1). Therefore, the 30-ft drop load conditions are the limiting conditions and are considered in the evaluation of the support disk and support wall of the GTCC basket in Section 2.7.10. Thus, no further evaluation of the GTCC basket support disk and support wall for normal conditions of transport is required. However, the tubes of the GTCC basket are evaluated for the 1-ft drop conditions (Normal Conditions of Transport) and presented in Sections 2.6.16.2 and 2.6.16.3. For accident conditions, the tubes are not required to remain intact since the GTCC waste will be contained within the support wall of the basket.

Based on the thermal analysis results for the GTCC basket, the ΔT across the support wall thickness is less than 2°F and the ΔT between the inner and outer surfaces of the support disk is less than 11°F. The support disk is free to expand radially and the tubes are also free to expand without any thermal restraint. Therefore, the evaluations for the GTCC basket consider impact loads only, since the thermal loads are negligible (Note that consideration for thermal effect is not required for Accident Conditions).

Conservatively, the material allowable stress values were taken at 500°F for this evaluation of the support disks and the wall structure, while stress allowables at 550°F are used for the tubes. Note that the calculated maximum component temperatures based on the thermal analysis for the GTCC waste basket are:

Tubes - 529°F
Support Wall Structures - 391°F
Support Disk - 389°F

The yield stress (S_y) for Type 304 Stainless Steel is 19.4 ksi @ 500°F and 19.0 ksi @ 550°F

2.6.16.2 GTCC Waste Basket Tube - End Drop Evaluation

For the end drop condition, the tubes are considered to be free standing, and the only loading is that of the tube (5934.9/24 = 247.3 pounds). The tubes are evaluated for a 20-g impact loading.

The tube is considered to be loaded by an axial compressive force (P).

$$P = 20(247.3) = 4{,}946 \text{ pounds}$$

The length of the tube is 109.8 inches and the cross sectional area of the tube is computed to be

$$A = (8.32^2 - 7.82^2) = 8.07 \text{ in.}^2$$

The allowable stress, F_a, for an axially loaded compression member is given by NF-3322.1(c)(2).

$$F_a = S_y\left(0.47 - \frac{Kl/r}{444}\right) = 7{,}505 \text{ psi,}$$

where,

S_y = 19.0 ksi, material yield strength

K = 1.0 for the end conditions,

l = 109.8 in., length of tube, and

$$r = \sqrt{\frac{8.32^4 - 7.82^4}{12 \times 8.07}} = 3.296$$

Therefore, $Kl/r = 33.31 < 120$

The allowable axial load on a tube is calculated to be

$$P_v = A\,F_a = (8.07)(7505) = 60{,}565 \text{ lb}$$

The margin of safety is computed to be

$$M.S. = \left(\frac{60{,}565}{4{,}946}\right) - 1 = +11.2$$

2.6.16.3 GTCC Waste Basket Tube - Side Drop Evaluation

Similar to the end drop condition, the tubes are evaluated for a 20 g side impact load. During the drop condition, the weight from the baffles and tubes is transmitted via the tube walls. Since the GTCC waste basket has a stack of six tubes (maximum), five tubes and their contents can be accumulated to a single tube and result in maximum compressive stresses on the tube wall. As shown in the following figure, a 1-inch section of the tube wall is considered in the structural evaluation. Knowing that the total tube length is 109.8 inches, the applied load during a 20 g normal conditions of transport impact is

$$P = \frac{(P_1 + P_2)20}{109.8} = 369\ lb/in$$

where,

P_1 = 12,341/24 × 5 × 0.5 = 1,286 lb, weight of the waste

P_2 = 5,935/24 × 6 × 0.5 = 742 lb weight of the tubes

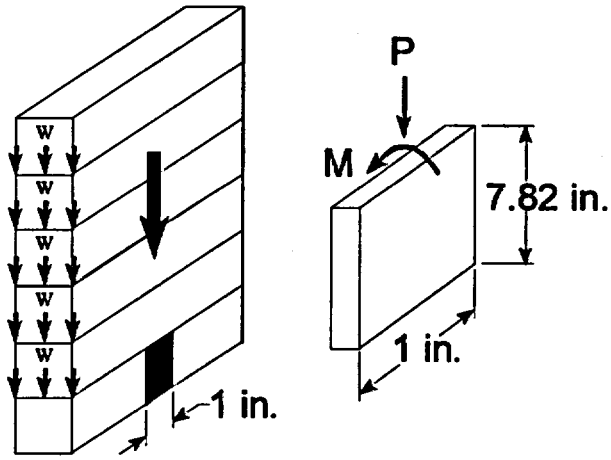

The out-of-plane moment is considered to be ½ of the fix-end moment due to the waste weight

$$M = \left(\frac{1}{12} wL^2\right) 0.5 = 31 \text{ in.-lb},$$

where

$$w_2 = \left(\frac{12.341}{24}\right)\left(\frac{1}{109.8}\right)\left(\frac{1}{7.82}\right)20 = 12 \text{ lb/in.}$$, the distributed load across the tube

$L = 7.82$ in., tube inside width

The cross-sectional area of the tube is

$$A = (1/4)(1) = 0.25 \text{ in}^2$$

and the section modulus is

$$S = \frac{bt^2}{6} = \frac{(1/4)^2}{6} = 0.01 \text{ in}^3$$

The axial compressive stress due to the load P is calculated to be

$$f_a = \frac{P}{A} = \frac{369}{0.25} = 1{,}476 \text{ psi}$$

and the bending stress is

$$f_b = \frac{M}{S} = \frac{31}{0.01} = 3{,}100 \text{ psi}$$

From NF-3322.1(e)(1), the Euler stress divided by factor of safety is

$$F'_e = \frac{\pi^2 E}{2.15(Kl/r)^2} = \frac{\pi^2(25{,}800)}{2.15(108.4)^2} = 10.08 \text{ ksi}$$

where

$K = 1.0$ for the end conditions

2.7.3.4 Bolts - Closure Lids (Thermal Accident)

During the thermal (fire) hypothetical accident, the NAC-STC inner lid bolts and outer lid bolts are calculated to experience a maximum average temperature of 335°F. This ANSYS analysis of the closure lids and bolts was performed using an average temperature of 310°F. The effect on the stress results due to the temperature difference of 25°F (335-310) is insignificant since the increase of the coefficient of thermal expansion (thermal stress) for the bolt material is less than 0.5%.

The maximum thermal gradients occur at the end of the fire (30 minutes), which produces the largest differential thermal growth between the inner and outer lids of the cask body. Using the results of the ANSYS analysis at the end of the fire (30 minutes), the maximum membrane and bending stresses for the lid bolts, including the combined effects of the 125 psig internal pressure, o-ring compression forces, bolt preload, and thermal accident conditions, are determined as shown in Figure 2.7.3.4-1 to be:

Bolt Location	Maximum Membrane + Bending (ksi)
Inner Lid Bolts:	90.5 + 6.3 = 96.8
Outer Lid Bolts:	82.3 + 1.6 = 83.9

Based on the yield stress at 335°F, the margins of safety are:

Inner Lid bolts (SB-637 Grade N07718)

$$\text{M.S.} = \frac{139.9}{96.8} - 1 = \underline{+0.45}$$

Outer Lid bolts (17-4PH Stainless Steel)

$$\text{M.S.} = \frac{91.8}{83.9} - 1 = \underline{+0.09}$$

Figure 2.7.3.4-1 Bolt Stress - Thermal (Fire) Accident

```
POST1 -INP=
DSB1

PRINT ELEMENT STRESS ITEMS PER ELEMENT

        ***** POST1 ELEMENT STRESS LISTING *****

 LOAD STEP     1  ITERATION=    50  SECTION=  1
 TIME=        0.          LOAD CASE=  1

 ELEM       SX1          SX2          SXJ
  2836    13342.       4331.6    -0.549728-10
  2840    15093.      -1606.4    -0.148558-10
  2843        0.    -0.276348-10  3928.8
  2844  -0.107308-09  4089.4      0.299908-10
  2845    82316.      -1606.6      -1606.6
  2846   0.129828-09 0.203828-11   12067.
  2847  -0.194428-09  11432.      0.643128-10
  2848    90483.       4331.6      4331.6

MINIMUMS
ELEMENT  2847        2840        2845
VALUE   -0.194428-09 -1606.6     -1606.6

MAXIMUMS
ELEMENT  2848        2847        2846
VALUE    90483.      11432.      12067.
POST1 -INP=
PRINT NODE LISTING

        ***** POST1 NODE LISTING *****

 NODE        X           Y           Z        THXY    THYZ    THXZ

 3057     33.206      187.40        0.       0.000   0.000   0.000
 3058     33.206      188.40        0.       0.000   0.000   0.000
 7026     37.633      176.90        0.       0.000   0.000   0.000
 7066     37.633      179.40        0.       0.000   0.000   0.000
 9000     33.703      192.78        0.       0.000   0.000   0.000
 9001     33.206      192.78        0.       0.000   0.000   0.000
 9002     36.633      192.78        0.       0.000   0.000   0.000
 9003     36.833      185.40        0.       0.000   0.000   0.000
 9006     37.633      185.40        0.       0.000   0.000   0.000
 9005     38.608      185.40        0.       0.000   0.000   0.000
POST1 -INP=

9

PRINT ELEMENT LISTING

        ***** POST1 ELEMENT LISTING *****

  ELEM  TYPE STIF MAT  ESYS     NODES

  2836   3    3   13    0    7066  7026
  2840   3    3   12    0    3058  3057
  2843   3    3   12    0    9000  9001
  2844   3    3   12    0    9001  9002
  2845   3    3   12    0    9001  3058
  2846   3    3   12    0    9003  9006
  2847   3    3   12    0    9006  9005
  2848   3    3   12    0    9006  7066
POST1 -INP=

POST DATA FILE= 12
LOAD STEP=     1
ITERATION=    50
CURRENT INPUT FILE= 05
GEOMETRY STORED FOR   3089  NODES   2842  ELEMENTS
***** STRESS DEFINITIONS ******
LABEL  STIF   ITEM
```

OUTER LID BOLT

INNER LID BOLT

2.7.4 Crush

In accordance with 10 CFR 71.73(c)(2) and IAEA Safety Series No. 6, paragraph 627(c), this test is not applicable to the NAC-STC because the mass of the cask and contents is greater than 500 kilograms (1100 lb) and the cask and contents have an overall density greater than 1000 kilograms/cubic meter (62.4 lbs/ft^3).

This Page Intentionally Left Blank

2.7.5 Immersion - Fissile Material

According to the requirements of 10 CFR 71.73(c)(5), a package containing fissile material, where water inleakage has not been assumed for criticality analysis, must be subjected to water pressure equivalent to immersion under a head of water of at least 0.9 meters (3 feet) for a period of 8 hours. This immersion is the fifth test in the Hypothetical Accident sequence of tests for the package. Paragraph No. 633 of IAEA Safety Series No. 6 specifies the same requirements for the international shipment of radioactive materials. A head of water of 0.9 meters (3 feet) is equivalent to an external pressure of (3)(0.433) = 1.3 psig.

The analyses presented in Sections 2.7.0.0 through 2.7.3.0 document that the NAC-STC maintains containment of the package contents for the sequence of Hypothetical Accident tests - free drop, puncture, and fire - that precede the immersion test. The outer lid is shown to be structurally adequate for a maximum external dynamic crush pressure of the top impact limiter of 2376 psi (Section 2.7.1.6). For the 2.65-inch thick outer shell with a mean radius of 42.03 inches, an external pressure of 1.3 psig produces a negligible compressive hoop stress. According to the manufacturer's specifications, the metallic o-rings used in the NAC-STC are adequate for pressures in excess of 5000 psi. Therefore, the NAC-STC satisfies the immersion requirement of 10 CFR 71.73(c)(5) for a package containing fissile material.

The criticality analyses of both the directly loaded fuel configuration and the canistered fuel configuration do assume water inleakage, so containment of the package contents is an additional safety consideration.

This Page Intentionally Left Blank

2.7.6 Immersion - All Packages

According to the requirements of 10 CFR 71.73(c)(5), a package must be subjected to water pressure equivalent to immersion under a head of water of at least 15 meters (50 ft) for a period of 8 hours. Paragraph 630 of IAEA Safety Series No. 6 requires that a package be immersed under a head of water of at least 200 meters (656 ft) for a period of not less than 1 hour. A head of water of 200 meters (656 ft) is equivalent to an external pressure of (656)(0.433) = 284 psig. Also, 10 CFR 71.61 requires that a package's undamaged containment system be able to withstand an external water pressure of 290 psi for a period of not less than one hour without collapse, buckling or inleakage of water.

The outer lid is shown to be structurally adequate for a maximum external dynamic crush pressure of the top impact limiter of 2376 psi (Section 2.7.1.6). For the 2.65-inch thick outer shell with a mean radius of 42.03 inches, an external pressure of 290 psig produces a compressive hoop stress of -4599 psi, which is much less than the material yield strength. According to the manufacturer's specifications, the metallic o-rings used in the NAC-STC are adequate for pressures in excess of 5000 psi.

Therefore, the NAC-STC satisfies all of the immersion requirements for a package that is used for the international shipment of radioactive materials.

This Page Intentionally Left Blank

Table 2.7.9.1-2 30-Foot Side Drop - Canistered Fuel Basket Support Disk, Primary Membrane + Bending Stresses, Extreme Cold Condition, θ = 0°

Sect.	SX	SY	SXY	Stress Intensity	Allowable Stress	Margin of Safety
179	1.4	75	-1.1	75	135	0.8
158	1.4	73.7	0.4	73.7	135	0.8
155	1.3	69.3	-0.3	69.3	135	0.9
77	-44.9	-50.3	-19.1	66.9	135	1
69	0	65.7	2.5	65.8	135	1.1
181	1.2	64.7	-0.3	64.7	135	1.1
173	-9.2	-63.5	-0.9	63.5	135	1.1
160	1.1	63.1	0.3	63.1	135	1.1
28	-9	53.9	2	63	135	1.1
30	-10.3	52.5	-2	63	135	1.1
39	-33.1	-50.5	19.2	62.9	135	1.1
70	-20	42.1	-5	62.9	135	1.1
167	-9.1	-62.4	0.3	62.4	135	1.2
31	-31	30.2	5.5	62.1	135	1.2
67	-19	42.9	-1.6	62	135	1.2
164	-9	-60.2	-0.3	60.2	135	1.2
154	1.1	58.4	-0.3	58.4	135	1.3
178	1.2	57.8	-0.9	57.8	135	1.3
157	1.1	57.1	0.3	57.1	135	1.4
58	2.7	55.7	2.4	55.8	135	1.4
17	-9.4	43.5	2.3	53.1	135	1.5
175	1	53	0	53	135	1.5
144	-19.6	-52.8	-1.9	52.9	135	1.6
20	-27.1	25	-4.4	52.9	135	1.6
59	-34.9	15.3	5.2	51.2	135	1.6
169	0.9	50.9	0	50.9	135	1.7
56	-17.4	32.8	-1.3	50.4	135	1.7
19	-5.7	44	-1.4	49.8	135	1.7
177	1.1	49.7	-0.6	49.7	135	1.7
172	1	49.5	-0.7	49.5	135	1.7
166	1	48.4	0.1	48.4	135	1.8
156	1.1	48.4	0	48.4	135	1.8
163	1	47.5	-0.3	47.5	135	1.8
32	-10.2	36.8	3	47.4	135	1.8
33	-25.3	22	-1.4	47.4	135	1.9
161	1	47.4	0.1	47.4	135	1.9
75	-42.2	-19.6	-11.7	47.1	135	1.9
24	-27.3	19	-4	47	135	1.9
182	0.9	46.9	0.1	46.9	135	1.9
21	-11.9	34.8	1.5	46.8	135	1.9
180	1	46.8	-0.1	46.8	135	1.9
174	-8.7	-45.1	0	45.1	135	2
159	1	44.5	0.2	44.5	135	2
23	-2.1	41.8	-1.2	43.9	135	2.1
170	-8.7	-43.7	0.1	43.7	135	2.1

Table 2.7.9.1-3 30-Foot Side Drop - Canistered Fuel Basket Support Disk, Primary Membrane Stresses, Extreme Cold Condition, $\theta = 22.9°$

Sect.	SX	SY	SXY	Stress Intensity	Allowable Stress	Margin of Safety
31	-27.3	22.5	-1.2	49.9	94.5	0.89
20	-22	21.8	-1.9	43.9	94.5	1.15
70	-24.3	18.5	-0.6	42.8	94.5	1.21
59	-19.2	18.8	-1.6	38.2	94.5	1.47
77	-10.2	-32	-12.7	37.9	94.5	1.49
63	-17.5	19.9	-1.2	37.5	94.5	1.52
39	-34.7	-17.2	5	36	94.5	1.63
17	-29.8	5	-3.8	35.6	94.5	1.65
191	-35.5	-1.4	1.1	35.6	94.5	1.66
25	-23.2	11.9	-2.2	35.3	94.5	1.68
72	-22	12.7	-0.8	34.7	94.5	1.72
21	-25.5	8.4	-3.5	34.6	94.5	1.73
212	-31.9	-1.4	0.6	31.9	94.5	1.97
65	-16.1	14.4	-2	30.7	94.5	2.08
28	-28.7	1.4	-2.7	30.6	9.45	2.09
189	-29.4	-1.6	1.5	29.5	94.5	2.2
29	-28.4	-23.7	-2.1	29.2	94.5	2.24
58	-25.8	1.8	-3.3	28.4	94.5	2.33
123	-7.6	-27.9	-3	28.3	94.5	2.34
69	-28	-1.5	-2.2	28.2	94.5	2.36
32	-24.2	3.8	-1.6	28.1	94.5	2.36
48	-11.4	16	-1.9	27.7	94.5	2.42
37	-27.2	-12	0.9	27.3	94.5	2.46
147	4	-22.8	-1.3	26.9	94.5	2.51
94	-9.1	17.3	-2	26.6	94.5	2.55
46	-13.5	-25.9	-2.8	26.5	94.5	2.56
127	-8.1	-26	-2.5	26.3	94.5	2.59
210	-26.2	-1.6	1.2	26.3	94.5	2.6
79	-13.7	12	-2.7	26.2	94.5	2.6
68	-25.4	-22.9	-1.6	26.2	94.5	2.61
50	-13.8	-25.8	-2	26.1	94.5	2.62
5	-18.1	7.1	-3.1	25.9	94.5	2.65
62	-24.9	-1	-2.9	25.3	94.5	2.74
24	-14.2	10.5	-1.8	25	94.5	2.78
211	-24.8	-1.5	1	24.9	94.5	2.8
18	-23.5	-17.9	-3.1	24.9	94.5	2.8
138	-1.8	-24.6	-2.5	24.9	94.5	2.8
52	-11.5	13	-1.3	24.7	94.5	2.82
61	-19.2	-23.6	-2.1	24.4	94.5	2.87
105	-4.4	19.9	-0.8	24.3	94.5	2.88
132	-7	16.8	-1.7	24	94.5	2.93
186	-23.5	-1.6	3	23.9	94.5	2.95
119	-13.3	-22.8	-3.1	23.7	94.5	2.98
81	-15.6	-21.9	-3.7	23.6	94.5	3
117	-11.4	11	-2.4	22.9	94.5	3.12

Table 2.7.9.1-4 30-Foot Side Drop - Canistered Fuel Basket Support Disk, Primary Membrane + Bending Stresses, Extreme Cold Condition, θ = 22.9°

Sect.	SX	SY	SXY	Stress Intensity	Allowable Stress	Margin of Safety
[illegible]	83.2	45.2	3	83.4	135	0.6
30	58.1	82.7	0.5	82.7	135	0.6
20	82	21.7	5.5	82.5	135	0.6
116	52.3	80.2	0.3	80.2	135	0.7
19	33.8	79.1	0.9	79.2	135	0.7
120	39.7	76	1.1	76	135	0.8
79	74.1	38.8	4.5	74.7	135	0.8
24	71.3	23.4	3.3	71.5	135	0.9
95	53.8	70.7	1.6	70.9	135	0.9
39	52.3	51.2	18.7	70.5	135	0.9
[illegible]	59.4	70.4	0.5	70.4	135	0.9
31	56.5	67.9	1.5	68.9	135	[illegible]
59	68.3	16	4.7	68.8	135	[illegible]
30	22.7	68.6	2.4	68.5	135	[illegible]
45	39.3	68.3	0.1	68.3	135	[illegible]
2	66.9	38.9	2	67	135	[illegible]
117	66.4	35.2	4.1	66.9	135	[illegible]
119	49.7	64.9	1.1	66	135	[illegible]
31	65.5	6.3	4.6	65.9	135	[illegible]
131	48.3	65.7	1.5	65.8	135	1.1
56	35.1	65.7	1	65.7	135	1.1
128	18.8	65.4	0.1	65.4	135	1.1
9	64.3	35.5	2.1	64.4	135	1.1
135	37.9	64	0.8	64	135	1.1
37	61.6	21.8	10.1	64	135	1.1
160	1.1	63.7	1.2	63.7	135	1.1
83	63.4	40.2	1.8	63.5	135	1.1
124	28.9	62.8	1	62.8	135	1.2
63	62.2	6.6	4.4	62.6	135	1.2
3	61.1	60.5	1.4	62.3	135	1.2
106	29.2	61	0.4	61	135	1.2
48	60.5	16.2	4.6	61	135	1.2
96	56.5	58.8	2.9	60.8	135	1.2
121	59.2	21.8	5	59.9	135	1.3
158	1.3	59	2.1	59	135	1.3
60	28.1	58.8	0.6	58.78	135	1.3
123	32.9	57.7	4.5	58.5	135	1.3
78	58.3	30.9	0.4	58.3	135	1.3
125	57.4	18.3	3.2	57.7	135	1.3
173	8.4	57.5	0.8	57.5	135	1.3
17	57.3	4.9	3.1	57.4	135	1.4
70	57.1	2.5	3.3	57.3	135	1.4
142	19.8	57.2	0.7	57.2	135	1.4
49	28.6	56.2	0.7	56.2	135	1.4
167	1	55.8	1.7	55.9	135	1.4

Table 2.7.9.1-5 30-Foot Side Drop - Canistered Fuel Basket Support Disk, Primary Membrane Stresses, Extreme Cold Condition, θ = 45°

Sect	SX	SY	SXY	Stress Intensity	Allowable Stress	Margin of Safety
31	-21.8	16.3	-0.9	38.2	94.5	1.48
124	16.4	-21.7	-0.9	38.1	94.5	1.48
141	-5.1	-32.5	3.7	33	94.5	1.86
25	-24	8.7	-2.1	32.9	94.5	1.87
147	8.5	-23.6	-1.6	32.2	94.5	1.94
20	-17.5	14.5	-1.5	32.1	94.5	1.94
120	14.4	-17.4	-1.5	32	94.5	1.95
77	-5.5	-26.6	-10.8	31.1	94.5	2.04
17	-30.6	-1.1	-3.6	31	94.5	2.05
123	-1.3	-30.4	-3.6	30.9	94.5	2.06
21	-26.4	3.8	-3.1	30.8	94.5	2.07
39	-30.6	-6.7	1.2	30.7	94.5	2.08
138	3.6	-26.4	-3.1	30.6	94.5	2.09
28	-30.2	-3	-2.7	30.5	94.5	2.1
127	-3.1	-30.1	-2.7	30.4	94.5	2.11
69	-29.4	-7.7	-2.1	29.6	94.5	2.19
50	-7.8	-29.4	-2.1	29.6	94.5	2.2
70	-17.8	10.8	-0.3	28.6	94.5	2.31
191	-28.4	-2.7	1.3	28.5	94.5	2.32
176	-2.7	-28.3	1.3	28.4	94.5	2.33
49	10.7	-17.7	-0.3	28.3	94.5	2.33
66	-22.7	-5.5	-10.7	27.8	94.5	2.4
58	-27.2	-5.9	-3.1	27.6	94.5	2.43
46	-6.1	-27	-3.1	27.5	94.5	2.44
62	-25	-10.4	-2.5	25.4	94.5	2.72
61	-10.5	-24.8	-2.5	25.3	94.5	2.74
140	1	-23.4	-2.8	25.1	94.5	2.77
126	-21.9	-22.5	-2.7	25	94.5	2.78
29	-22.6	-21.8	-2.7	25	94.5	2.78
59	-13.8	10.9	-1.1	24.8	94.5	2.81
45	10.7	-13.7	-1.1	24.5	94.5	2.86
119	-9.1	-23.4	-3.3	24.1	94.5	2.92
32	-23.2	0.5	-2	24.1	94.5	2.92
2	-23.3	-9	-3.3	24	94.5	2.93
128	-9.6	-23.8	-1.6	24	94.5	2.94
189	-23.5	-2.8	1.6	23.6	94.5	3
212	-23.6	-2.7	0.7	23.6	94.5	3.01
174	-2.8	-23.4	1.6	23.5	94.5	3.02
182	-2.7	-23.4	0.7	23.4	94.5	3.03
78	-21.2	-12.2	-4.3	22.9	94.5	3.12
68	-18.6	-21.7	-2.2	22.9	94.5	3.13
81	-12.3	-21.1	-4.3	22.8	94.5	3.14
51	-21.7	-18.5	-2.2	22.8	94.5	3.14
37	-22.6	-7.8	0.2	22.6	94.5	3.19
122	-17.4	-18.6	-3.6	21.6	94.5	3.37

Table 2.7.9.1-6 30-Foot Side Drop - Canistered Fuel Basket Support Disk, Primary Membrane + Bending Stresses, Extreme Cold Condition, θ = 45°

Sect.	SX	SY	SXY	Stress Intensity	Allowable Stress	Margin of Safety
116	50	86.5	1.6	86.5	135	0.6
61	86.4	50	1.6	86.5	135	0.6
79	83.8	50.5	2.5	84	135	0.6
80	50.5	83.5	2.5	83.7	135	0.6
20	82.9	30.7	3.6	83.1	135	0.6
120	30.5	82.5	3.5	82.7	135	0.6
141	39.9	54.9	4	72.5	135	0.9
117	72.1	48.8	2.3	72.4	135	0.9
1	49.1	72	2.3	72.3	135	0.9
83	71.7	49.6	0	71.7	135	0.9
95	49.7	71.7	0	71.7	135	0.9
24	71	31.5	1.3	71	135	0.9
135	31.6	70.8	1.3	70.9	135	0.9
59	70.3	26.6	2.6	70.5	135	0.9
15	26.7	70	2.5	70.2	135	0.9
31	69.5	17.1	3.1	69.7	135	0.9
119	44.7	69.1	3.6	69.7	135	0.9
2	69.1	44.9	3.6	69.7	135	0.9
124	17.1	69.3	3.1	69.5	135	0.9
131	43.5	68.9	0.2	68.9	135	1
9	68.6	43.4	0.2	68.6	135	1
37	66.9	19.5	7.3	68	135	1
19	48	67.9	0.2	67.9	135	1
121	67.6	47.8	0.2	67.6	135	1
128	23.3	67.2	5.4	67.4	135	1
78	66.9	45.1	2.4	67.2	135	1
81	45.1	66.7	2.4	67	135	1
125	64.5	27.8	1.4	64.5	135	1.1
30	27.8	64.3	1.4	64.4	135	1.1
39	49.5	44.6	16.1	63.4	135	1.1
56	25.8	62.8	2.8	63	135	1.1
48	62.6	25.7	2.7	62.9	135	1.1
63	61.7	17.4	2.5	61.8	135	1.2
60	17.4	61.4	2.5	61.6	135	1.2
70	60.3	14.4	1.4	60.3	135	1.2
49	14.5	60.2	1.4	60.2	135	1.2
17	59.8	17.6	1.1	60.2	135	1.2
123	17.6	59.6	1.1	59.9	135	1.3
96	50.2	59	1.8	59.4	135	1.3
82	59	50	1.8	59.3	135	1.3
3	46	58.8	1.3	58.9	135	1.3
118	58.8	45.6	1.3	58.9	135	1.3
87	56.9	34.7	0.6	57	135	1.4
106	34.7	56.7	0.6	56.7	135	1.4
134	42.4	55.5	1.9	55.8	135	1.4

Table 2.7.9.1-7 30-Foot Side Drop - Canistered Fuel Basket Support Disk, Primary Membrane Stresses, Cold Condition, θ = 0°

Sect	SX	SY	SXY	Stress Intensity	Allowable Stress	Margin of Safety
31	-29.7	30.5	-0.1	60.3	92.3	0.53
70	-30	31.3	0.7	61.3	94.1	0.53
59	-24.1	26	0.5	50.1	89.2	0.78
20	-23.9	25.7	0.1	49.6	94.5	0.91
24	-21.5	22.5	-0.3	44	89.9	1.04
39	-25.2	-36.1	13.6	45.4	94	1.07
33	-26.3	17.5	0.1	43.7	94.5	1.16
77	-31.8	-28.8	-10.1	40.5	94.1	1.33
212	-38.7	0.1	-0.4	38.8	94.5	1.44
63	-18.9	18.4	0.7	37.3	91.5	1.45
191	-38.3	0.1	0	38.3	94.5	1.47
72	-23.2	13.1	0.1	36.3	92.7	1.56
117	-15.2	18.4	0.6	33.6	91.4	1.72
67	-19.3	13.4	1.6	32.8	89.3	1.73
79	-15.2	18.1	0	33.3	91.4	1.74
9	-15.6	16.9	-0.2	32.5	91.4	1.81
32	-17.7	14.3	0.5	32.1	91.6	1.86
5	-19.9	11.1	-0.5	31	89.1	1.87
189	-31.9	-0.1	-0.1	31.9	92.3	1.9
71	-18.1	14	0.2	32	94	1.93
210	-32.2	-0.1	-0.5	32.2	94.5	1.93
30	-18.5	13.2	1	31.7	93.3	1.94
44	-20.1	11.5	1.1	31.6	94.3	1.99
29	-30.9	-17.3	0	30.9	92.3	1.99
132	-10.1	20.4	0.5	30.5	91.5	2
68	-31.2	-17.9	0.6	31.2	94	2.01
28	-17.4	13.2	-0.9	30.6	93.3	2.05
94	-10.1	20.4	0.1	30.4	94	2.09
69	-17	13.3	-0.3	30.2	94.1	2.11
190	-29.4	-0.1	0	29.4	91.6	2.11
26	-12.7	15.8	0.2	28.5	91.5	2.21
75	-28.5	-14.1	-1.8	28.8	94.5	2.29
37	-27.9	-14.2	2.2	28.2	93.4	2.31
17	-16.8	9.3	-1.2	26.2	91.6	2.5
48	-13.6	13	0.5	26.6	94.5	2.56
211	-26.2	-0.1	-0.4	26.2	94.5	2.61
145	-6	-26	0.6	26	94	2.61
107	-6	-25.9	0	25.9	94.5	2.64
186	-25.5	-0.1	0.3	25.5	93.3	2.65
65	-10.3	14.7	-0.3	25	91.4	2.66
207	-25.8	-0.1	-0.8	25.8	94.5	2.67
57	-25.7	-17.6	0.6	25.8	94.5	2.67
18	-25.5	-17.1	0	25.5	94.5	2.71
143	-4.8	20.5	0.5	25.3	94.3	2.73
56	-15.8	9.2	1.9	25.3	94.5	2.74

Table 2.7.9.1-8 30-Foot Side Drop - Canistered Fuel Basket Support Disk, Primary Membrane + Bending Stresses, Cold Condition, θ = 0°

Sect.	SX	SY	SXY	Stress Intensity	Allowable Stress	Margin of Safety
179	1.4	74.5	1	74.5	135	0.81
158	1.4	73.3	0.4	73.3	135	0.84
155	1.3	68.9	0.3	68.9	135	0.96
181	1.2	64.5	0.3	64.5	130.6	1.02
77	44	49.4	18.9	65.7	134.5	1.05
67	18.4	43.4	1.7	61.9	127.5	1.06
69	10.6	54.2	2.4	65	134.4	1.07
167	9.1	62.4	0.3	62.4	130.6	1.09
164	9	60.1	0.3	60.1	127.3	1.12
173	9.2	63.3	0.9	63.3	134.4	1.12
30	9.9	62.6	2.1	62.6	133.3	1.13
31	30.4	30.4	5.4	61.7	131.9	1.14
39	32.3	50.9	19.1	62.8	134.3	1.14
160	1.1	63.1	0.3	63.1	135	1.14
70	39.7	21.5	6.3	62.4	134.4	1.15
28	9.2	62.6	1.9	61.9	133.3	1.15
154	1.1	58.4	0.2	58.4	134.5	1.30
68	2.1	54.9	2.4	55	127.3	1.31
178	1.1	57.7	0.9	57.7	135	1.34
157	1.1	57.1	0.3	57.1	135	1.36
17	9.6	42.8	2.2	52.6	130.8	1.49
59	34.2	15.8	5.1	51.1	127.4	1.49
175	1	52.9	0	52.9	132.5	1.50
169	0.9	51	0	51	130.6	1.56
144	19.1	51.8	1.9	51.9	133.5	1.57
20	27.2	24.5	4.4	52.4	135	1.58
166	1	48.5	0.1	48.5	127.4	1.63
56	16.9	33.4	1.3	50.3	135	1.68
172	1	49.4	0.7	49.5	134.3	1.71
177	1.1	49.6	0.5	49.6	135	1.72
19	5.1	44.3	1.4	49.4	135	1.73
24	27.6	18.7	3.9	46.9	128.4	1.74
182	0.9	46.9	0.1	46.9	130.6	1.78
156	1.1	48.4	0	48.4	135	1.79
32	10.4	35.9	8.1	46.7	130.8	1.80
163	1	47.5	0.2	47.5	135	1.84
161	1	47.3	0.1	47.3	135	1.85
180	1	46.7	0.1	46.7	134.5	1.88
33	25.4	21.4	1.2	46.8	135	1.88
21	12.1	34.4	1.5	46.6	134.5	1.89
75	40.9	19.3	11.7	46	135	1.93
170	8.7	43.6	0.1	43.6	128.4	1.94
174	8.7	45	0	45	134.3	1.98
23	2.1	41.5	1.3	43.7	130.6	1.99
176	8.7	43.4	0.1	43.4	130.8	2.01

Table 2.7.9.1-9 30-Foot Side Drop - Canistered Fuel Basket Support Disk, Primary Membrane Stresses, Cold Condition, θ = 22.9°

Sect.	SX	SY	SXY	Stress Intensity	Allowable Stress	Margin of Safety
31	-27.7	23.2	-1.2	50.9	92.3	0.81
20	-22.3	22.1	-1.9	44.6	94.5	1.12
70	-24.5	18.9	-0.6	43.4	94.1	1.17
59	-19.4	19	-1.6	38.6	89.2	1.31
63	-17.4	19.7	-1.2	37.1	91.5	1.46
77	-10.3	-31.7	-12.5	37.5	94.1	1.51
39	-35.8	-16	4.7	36.8	94	1.55
17	-29.9	5	-3.8	35.7	91.6	1.56
25	-23.1	11.8	-2.2	35.2	91.5	1.60
191	-36	-1.4	1.1	36	94.5	1.63
72	-21.8	12.6	-0.8	34.4	92.7	1.70
21	-25.2	8.4	-3.5	34.3	94.1	1.74
212	-32.1	-1.4	0.6	32.1	94.5	1.94
65	-15.9	14.5	-2	30.6	91.4	1.99
28	-28.9	1.7	-2.7	31.2	93.3	1.99
189	-29.8	-1.6	1.5	29.9	92.3	2.09
29	-28.7	-23.9	-2.1	29.6	92.3	2.12
58	-25.8	1.8	-3.2	28.4	89.1	2.14
32	-23.9	4	-1.6	28.1	91.6	2.26
123	-7.6	-27.8	-3.1	28.3	92.7	2.28
69	-28.1	-1.2	-2.2	28.3	94.1	2.33
5	-18.3	7.4	-3.1	26.4	89.1	2.37
37	-27.5	-11.7	0.9	27.6	93.4	2.39
79	-13.9	12.2	-2.8	26.6	91.4	2.43
94	-9.2	17.7	-2	27.2	94	2.46
147	4	-22.5	-1.3	26.7	92.7	2.48
48	-11.3	15.6	-1.9	27.2	94.5	2.48
68	-25.6	-22.9	-1.6	26.3	94	2.57
127	-7.9	-26.1	-2.5	26.5	94.5	2.57
210	-26.4	-1.6	1.2	26.4	94.5	2.57
46	-13.5	-25.8	-2.7	26.4	94.5	2.58
50	-13.5	-25.9	-2	26.3	94.5	2.60
62	-24.7	-1	-2.9	25.1	91.4	2.65
61	-19.1	-23.3	-2	24.1	89.2	2.70
119	-13.4	-23.2	-3.1	24.1	89.3	2.71
24	-13.8	10.1	-1.8	24.2	89.9	2.71
132	-7.1	17.1	-1.7	24.4	91.5	2.75
18	-23.8	-18.3	-3.1	25.2	94.5	2.76
138	-1.8	-24.2	-2.5	24.4	92.3	2.78
81	-15.8	-22.3	-3.8	24.1	91.5	2.80
105	-4.5	20.2	-0.8	24.7	94.5	2.83
211	-24.6	-1.5	1	24.7	94.5	2.83
186	-23.8	-1.6	3	24.2	93.3	2.85
52	-11.3	13	-1.3	24.4	94.5	2.87
117	-11.6	11	-2.4	23.1	91.4	2.96

Table 2.7.9.1-10 30-Foot Side Drop - Canistered Fuel Basket Support Disk, Primary Membrane + Bending Stresses, Cold Condition, θ =22.9°

Sect.	SX	SY	SXY	Stress Intensity	Allowable Stress	Margin of Safety
5	84.1	45.3	3.1	84.3	127.3	0.51
30	58.8	84.2	0.5	84.2	128.4	0.52
116	52.4	81	0.3	81	130.8	0.61
20	82.5	21.6	5.6	83	135	0.63
19	43.5	80.2	1	80.2	135	0.68
79	75.4	39.4	4.6	76	130.6	0.72
120	39.6	76.2	1.2	76.2	134.3	0.76
1	59.9	71.5	0.5	71.5	127.4	0.78
24	71.1	24.1	3.2	71.3	128.4	0.80
95	28.1	71.6	4.8	72.1	132.5	0.84
39	54.8	52.2	19.4	72.9	134.3	0.84
59	68	15.4	4.7	68.5	127.4	0.86
31	57.1	69	3.6	70	130.8	0.87
2	67.5	38.8	2.1	67.6	127.4	0.88
30	23	69.9	2.4	70	133.3	0.90
119	49.6	65.4	4.2	66.4	127.5	0.92
117	67.1	35.5	4.1	67.7	130.6	0.93
131	48.9	65.8	1.6	66	128.4	0.95
31	66.4	6.1	4.8	66.8	131.9	0.97
45	38.8	67.8	0.2	67.8	134.8	0.99
9	64.6	36.3	2	64.8	130.6	1.02
128	18.7	66.5	0.2	66.5	134.5	1.02
8	61.5	61.3	1.5	62.9	127.3	1.02
56	34.7	65.7	1	65.7	135	1.05
124	29.1	63.6	1.1	63.6	130.8	1.06
37	62.1	21.6	10.1	64.4	133.5	1.07
33	64.2	41.4	1.7	64.3	133.3	1.07
135	38.4	63.5	0.9	63.5	133.3	1.10
63	61.6	6.6	4.3	62	130.8	1.11
160	1.1	63.8	1.2	63.9	135	1.11
96	57.8	59.7	2.9	61.9	134.4	1.17
106	29.4	61.7	0.4	61.7	135	1.19
60	27.8	58.1	0.6	58.1	127.3	1.19
78	59.3	31.3	0.5	59.3	130.6	1.20
48	60.5	16.5	4.5	60.9	135	1.22
121	59.9	22.5	4.9	60.6	134.4	1.22
123	32.7	57.8	4.5	58.6	132.5	1.26
158	1.3	59.5	2.1	59.6	135	1.27
17	57.5	4.6	3.1	57.7	130.8	1.27
125	58.5	19.1	3.3	58.8	135	1.30
173	8.4	57.7	0.7	57.7	134.4	1.33
167	1	55.8	1.7	55.9	130.6	1.34
70	57.1	1.8	3.3	57.3	134.4	1.35
142	19.6	57.1	0.7	57.2	135	1.36
67	24.6	53.7	0.8	53.7	127.5	1.37

Table 2.7.9.1-11 30-Foot Side Drop - Canistered Fuel Basket Support Disk, Primary Membrane Stresses, Cold Condition, θ = 45°

Sect.	SX	SY	SXY	Stress Intensity	Allowable Stress	Margin of Safety
31	-21.9	16.2	-0.9	38.2	92.3	1.42
124	15.5	-21.1	-0.9	36.7	91.6	1.49
25	-24.4	8.8	-2.2	33.5	91.5	1.73
147	8.4	-23.4	-1.6	32	92.7	1.90
20	-17.7	14.7	-1.6	32.5	94.5	1.91
17	-30.9	-0.9	-3.6	31.3	91.6	1.93
141	-4.8	-31.8	3.5	32.2	94.5	1.94
21	-26.9	4	-3.1	31.5	94.1	1.99
77	-5.6	-26.7	-10.7	31.2	94.1	2.02
120	13.9	-17	-1.5	31	94	2.03
123	-1.4	-30.2	-3.6	30.6	92.7	2.03
138	3.5	-26.3	-3.1	30.4	92.3	2.04
28	-30.3	-3.3	-2.7	30.6	93.3	2.05
39	-30.2	-7.7	1.5	30.3	94	2.11
127	-3.7	-30	-2.7	30.3	94.5	2.12
69	-29.6	-7.9	-2.1	29.8	94.1	2.16
50	-8.4	-29.4	-2.2	29.6	94.5	2.19
58	-27.4	-5.7	-3.1	27.8	89.1	2.21
66	-22.5	-5.2	-10.6	27.6	89.9	2.26
70	-18	10.8	-0.3	28.8	94.1	2.27
191	-28.6	-2.7	1.2	28.7	94.5	2.29
176	-2.7	-27.6	1.3	27.7	91.6	2.31
46	-6.2	-26.9	-3.1	27.3	94.5	2.46
49	9.9	-17.2	-0.3	27.1	94.5	2.48
61	-10.8	-24.8	-2.6	25.5	89.2	2.54
59	-14	11.1	-1.2	25.2	89.2	2.54
62	-25.2	-10.1	-2.6	25.7	91.4	2.56
29	-22.8	-22.1	-2.7	25.1	92.3	2.67
119	-9.2	-23.2	-3.3	24	89.3	2.72
2	-23.1	-8.8	-3.3	23.8	89.2	2.75
32	-23.6	0.3	-2	24.3	91.6	2.77
126	-21.8	-21.9	-2.8	24.6	94.5	2.84
140	0.5	-23.4	-2.8	24.6	94.5	2.85
189	-23.7	-2.7	1.6	23.8	92.3	2.88
212	-23.8	-2.6	0.7	23.8	94.5	2.97
45	10.2	-13.3	-1.2	23.7	94.3	2.98
182	-2.7	-22.8	0.7	22.9	91.4	2.99
128	-9.4	-23.3	-1.6	23.5	94.1	3.00
81	-12.4	-21	-4.3	22.8	91.5	3.02
78	-20.8	-11.8	-4.3	22.6	91.4	3.04
68	-18.8	-22.1	-2.2	23.2	94	3.06
174	-2.8	22.8	1.6	22.9	94	3.10
37	-22.7	-7.9	0.3	22.7	93.4	3.12
51	-21.7	-18	-2.3	22.8	94.5	3.14
129	-7.6	-20.5	2.9	21.2	91.4	3.32

Table 2.7.9.1-12 30-Foot Side Drop - Canistered Fuel Basket Support Disk, Primary Membrane + Bending Stresses, Cold Condition, θ = 45°

Sect.	SX	SY	SXY	Stress Intensity	Allowable Stress	Margin of Safety
3	86.4	50.1	1.7	86.5	127.3	0.47
116	50.4	86.3	1.6	86.3	130.8	0.52
30	50.9	83.3	2.4	83.5	128.4	0.54
79	83.2	50	2.6	83.4	130.6	0.57
20	83.3	30.4	3.6	83.5	135	0.62
120	31.4	82.4	3.5	82.7	134.3	0.62
1	49.7	72	2.2	72.2	127.4	0.76
24	72.1	31.1	1.5	72.1	128.4	0.78
59	70.9	26.6	2.6	71	127.4	0.79
117	71.8	48.4	2.4	72.1	130.6	0.81
2	69.2	45	3.5	69.7	127.4	0.83
119	45.3	69.1	3.6	69.6	127.5	0.83
95	49.7	71.4	0.1	71.4	132.5	0.86
83	71.7	49	0.2	71.7	133.5	0.86
131	43.7	68.7	0.1	68.7	128.4	0.87
124	18.5	69.5	2.9	69.6	130.8	0.88
135	32	70.7	1.2	70.7	133.3	0.89
9	69.1	43.1	0.4	69.1	130.6	0.89
141	39.4	53.7	23.4	71	135	0.90
91	69	16.5	3	69.1	131.9	0.91
45	28	70.5	2.5	70.6	134.8	0.91
81	45.7	66.7	2.4	67	130.8	0.95
78	66.4	44.5	2.3	66.7	130.6	0.96
19	48.1	68.1	0.2	68.1	135	0.98
128	23.4	67.6	3.2	67.8	134.5	0.98
87	65.8	19.3	7.4	67	133.5	0.99
121	67.2	48.3	0.2	67.2	134.4	1.00
60	17.9	61.8	2.5	62	127.3	1.05
125	64.8	27.5	1.6	64.9	135	1.08
80	27.4	63.9	1.3	64	133.3	1.08
63	62.6	17.8	2.6	62.8	130.8	1.08
48	63.1	26	2.9	63.4	135	1.13
56	26	63	2.8	63.2	135	1.14
8	46.9	59	1.2	59.1	127.3	1.15
17	60	17.2	4.1	60.4	130.8	1.17
89	48.2	43.9	15.8	62	134.3	1.17
118	58.5	45	1.2	58.6	128.4	1.19
123	18.8	59.8	4	60.2	132.5	1.20
49	16.3	60.9	1.2	60.9	135	1.22
70	60.1	13.9	1.4	60.2	134.4	1.23
82	58.9	49.1	1.7	59.1	133.2	1.25
96	50.4	58.8	1.9	59.2	134.4	1.27
87	57	55.3	0.6	57	130.8	1.29
67	16.2	54.8	1.1	54.8	127.5	1.33
6	55.6	41.6	1.7	55.9	130.6	1.34

Table 2.7.9.1-13 30-Foot End Drop - Canistered Fuel Basket Support Disk

Load Step	Plot	Impact g-Load	Disk Layer	P_m	P_m+P_b	P+Q	Disk Temperature	Allowable Stress	MS
2	2	56.1	Top		55659		-40F	135000	1.43
2	2	56.1	Middle	9777			-40F	94500	8.67
2	2	56.1	Bottom		55659		-40F	135000	1.43
4	4	56.1	Top		56199		539F	128063	1.28
4	4	56.1	Middle	9919			539F	89644	8.04
4	4	56.1	Bottom		56199		539F	128063	1.28

Table 2.7.9.3-2 Summary of Buckling Interaction Coefficients for the 30-Foot Side Drop For In-Plane Buckling (About the Strong Axis)

Basket Angle	Load Cond	Dir.	P Max (Section)	M Max (Section)	EQ33	P1	M1	P1+M1 EQ31	M.S. EQ31	P2	M2	P2+M2 EQ32	M.S EQ32
0	1	X	11.44 (145)	1.044 (42)	.69	.263	.118	.381	1.62	.309	.109	.418	1.39
0	1	Y	2.00 (108)	2.842 (174)	.69	.058	.008	.066	14.16	.054	.007	.061	15.3
22.9	1	X	12.30 (119)	3.09 (3)	.69	.260	.351	.610	0.64	.305	.324	.629	0.60
22.9	1	Y	6.91 (176)	4.92 (80)	.69	.159	.547	.705	0.42	.187	.515	.702	0.43
45.0	1	X	12.32 (123)	3.71 (9)	.69	.283	.422	.706	0.42	.333	.389	.722	0.39
45.0	1	Y	12.39 (176)	4.64 (80)	.69	.285	.529	.814	0.23	.335	.487	.821	0.22
0	2	X	11.38 (119)	1.01 (42)	.69	.262	.114	.376	1.66	.307	.105	.413	1.42
0	2	Y	1.95 (176)	2.83 (174)	.69	.045	.308	.353	1.83	.053	.297	.350	1.86
22.9	2	X	11.26 (145)	3.152 (134)	.69	.259	.357	.616	0.62	.304	.330	.634	0.58
22.9	2	Y	7.07 (108)	5.000 (80)	.69	.163	.556	.719	0.39	.191	.524	.715	0.40
45.0	2	X	12.22 (123)	3.69 (9)	.69	.281	.420	.701	0.43	.330	.386	.717	0.40
45.0	2	Y	12.07 (176)	4.65 (80)	.69	.277	.529	.807	0.24	.326	.488	.814	0.23
0	3	X	13.39 (119)	.896 (42)	.69	.308	.103	.410	1.44	.362	.094	.456	1.20
0	3	Y	3.58 (176)	2.92 (175)	.69	.082	.320	.402	1.49	.097	.306	.403	1.48
22.9	3	X	12.53 (145)	3.436 (9)	.69	.288	.392	.680	0.47	.339	.360	.699	0.43
22.9	3	Y	9.226 (108)	5.236 (80)	.69	.212	.588	.800	0.25	.249	.549	.798	0.25
45.0	3	X	12.81 (123)	4.570 (5)	.69	.295	.522	.816	0.23	.346	.479	.825	0.21
45.0	3	Y	14.51 (176)	4.892 (80)	.69	.334	.563	.896	0.116	.392	.513	.905	0.105

2.7.9.4 Fuel Tube Analysis

The fuel tube provides a foundation and sealed cavity to mount BORAL neutron poison plates within the fuel basket structure. It does not provide a structural function relative to the support of the fuel assembly. The fuel tube configuration is shown in Figure 2.7.9.4-1. To ensure that the fuel tube remains functional when the cask is subjected to design load conditions, a structural evaluation of the tube has been performed for both the end and side impact load conditions.

2.7.9.4.1 Fuel Tube Side Impact Analysis

Detailed finite element analysis and classical hand calculations were performed for the fuel tubes for the directly loaded NAC-STC system as documented in Section 2.7.8.4. By comparing the design parameters (dimensions, weight, etc.) of the fuel tube for the canistered fuel to those of fuel tubes for the NAC-STC system, it is concluded that the analyses for the directly loaded uncanistered NAC-STC envelope the design conditions for the fuel tube of the canistered fuel system.

A comparison of the design parameters for the fuel tube of the canistered Yankee class system and the fuel tube of the directly loaded NAC-STC system is shown below:

	Canistered	Directly Loaded
Fuel Tube Material	S.S. Type 304	S.S. Type 304
Fuel Tube Thickness (inch)	0.048	0.048
Fuel Tube Inside Dimension (inch)	7.80	8.78
Fuel Tube Weight (lb)	59.	141.
Fuel Assembly Weight (lb)	900.	1,525
No. of Support Disks	22	31
Fuel Weight Supported by one Disk (lb)	41 (900/22)	49 (1,525/31)
Spacing Between Support Disk (inch)	3.91	4.37

2.7.9.4.2 End Impact Evaluation

The fuel tube end impact analysis for the directly loaded fuel basket configuration of the NAC-STC is documented in Section 2.7.8.4.1. The bearing stress during an end impact condition are proportional to the tube weight, tube cross-sectional area and the design g-load. Since the weight and center of gravity location of the canistered fuel configuration is essentially the same as that of the directly loaded fuel configuration, the same design g-loads (56.1g for end drop and 55g for side drop) are applicable to the canistered basket/tubes. Based on the fuel tube dimensions and loading data presented above, the bearing stress for an end impact condition for the canistered fuel tube is:

$$(S_{br})_{directly\ loaded}\ (59/141)\ (8.78/7.8) = 0.47\ (S_{br})_{directly\ loaded}$$

From Section 2.7.8.4.1, the calculated $(S_{br})_{directly\ loaded} = 4.8$ ksi, while the allowable stress (material yield strength) is 19.4 ksi.

Therefore, the canistered fuel tube stress is well below its allowable stress limit during an end impact accident condition.

Figure 2.7.9.4-1 Yankee Class Fuel Basket Tube Configuration

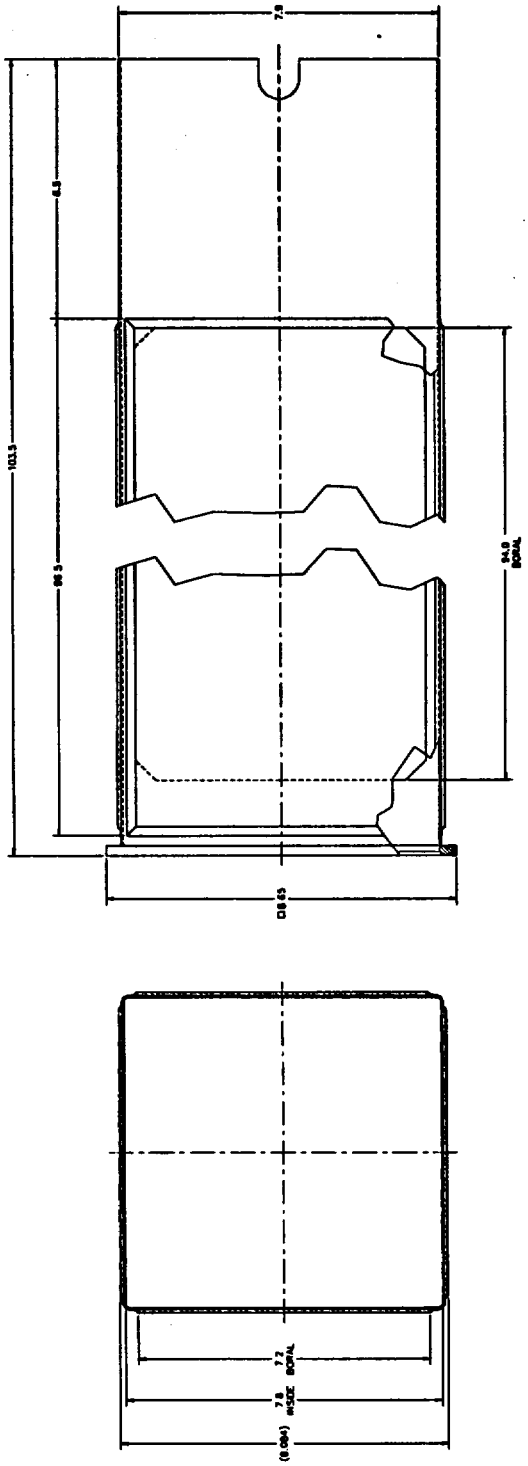

Figure 2.7.9.5-4 Bottom Weldment FE Model with Structural Applied Conditions (Canistered Fuel Basket)

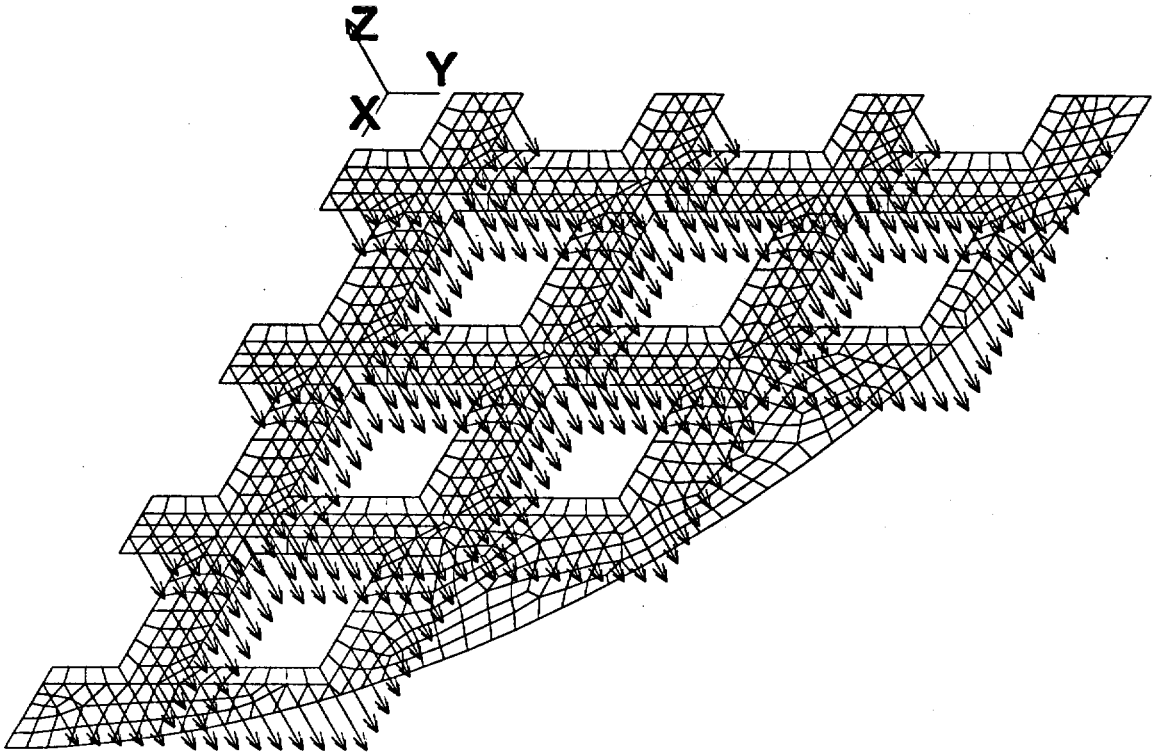

2.7.9.5.1 Results of Canistered Fuel Basket Weldment Analyses (30-Foot End Drop)

The maximum stress intensity (S_I), for primary membrane plus primary bending ($P_m + P_b$), for the 30-foot end drop analysis are 58.0 ksi for the top weldment and 48.1 ksi for the bottom weldment as shown in the table below.

Because there is a large radial temperature gradient through the weldments, the maximum stress intensities do not occur at the maximum temperature of the models, and it is overly conservative to compare these stress intensities to stress allowables based upon the maximum temperature. Therefore, the stress evaluation was performed on a nodal basis. That is, using ANSYS, the maximum stress at each node in each model was compared to the maximum allowable stress at the temperature of the node being evaluated.

For hypothetical accident conditions, the following criteria was used in evaluating the top and bottom weldments nodal stress intensities:

$P_m + P_b < 3.6S_m$ or S_u, whichever is less.

(Note: For Type 304 stainless steel in these temperature ranges, S_u is smaller than $3.6S_m$.)

The margin of safety (MS) was calculated as:

$$\text{M.S.} = \frac{AllowableStress}{NodalStressIntensity} - 1$$

The minimum margins of safety for each weldment for the end drop condition are:

Component/Condition	$P_m + P_b$ (ksi)	Nodal Temp. (°F)	S_u (ksi)	M.S.
Top Weldment/30-ft. Drop	58.0	223	69.9	+.20
Bottom Weldment/30-ft. Drop	48.1	257	68.1	+0.42

2.7.9.5.2 Top Weldment Structural Rib Buckling Evaluation

The structural ribs on the top weldment are subjected to axial loads during a top end drop. End constraints on the ribs during a top end drop consist of: fixed at the end welded to the top weldment, and free at the other end. Because there are no closed solutions readily available for

The margin of safety is computed as:

$$M.S. = \left(\frac{P_y}{P}\right) - 1 = \left(\frac{373,895}{301,180}\right) - 1 = +0.24$$

2.7.10.2 GTCC Waste Basket Support Disk-Side Drop Bearing Stress

In the side drop position, the weight of the GTCC contents and eight (8) 1-inch thick support disks and the 2.5-inch thick plates that comprise the basket walls transmit the load to the canister shell through the 1-inch thick support disks. As computed in Section 2.7.10.1, the total impact load experienced by a single support disk, when factored by 55 g, is 301,180 pounds. This is conservative because according to NF-3223.1, the bearing load evaluation is not required for service level D accident conditions. The bearing stress evaluation is the load divided by the area of contact between the 1-inch support disks and the canister shell. A 45 degree total angular contact is assumed for which the corresponding area of contact is:

$$A_c = \pi D t \theta = 27.08 \text{ in}^2,$$

where,

D = support disk diameter = 68.98 in.,

t = support disk thickness = 1.0 in.,

θ = ratio for contact angle = 45/360 = 0.125.

This corresponds to a bearing stress (S_{br}) of:

$$S_{br} = \frac{301,180}{27.08} = 11,121 \text{ psi.}$$

The allowable for the bearing stress for a normal condition of transport loading condition is S_y = 19,400 psi. Based on the conservative accident condition loading of 55 g, the margin of safety is computed as:

$$M.S. = \left(\frac{19,400}{11,121}\right) - 1 = +0.74.$$

2.7.10.3 GTCC Waste Basket Support Wall - Side Drop Evaluation

In the side drop orientation, the load of the GTCC waste and tubes is transferred into the 2.5-inch thick support walls. This develops a bending stress in the support wall. The deceleration of the contents and basket is 55 g. Considering the load of waste baffle and tubes to be transmitted uniformly to the support walls, the maximum moment in the wall is

$$M_{max} = \frac{55(w)(L)^2}{8} = 531,878 \text{ in} - \text{lb},$$

where,

w = (5,935 + 5,478 + 8,116 + 3,507 + 12,341)/111.3 = 317.9 pounds/inch , which is the weight of the baffle, tubes and support wall per unit length and,

L = 15.60 , distance between the support disks.

The calculation of the sectional modulus ($S = 970 \text{ in}^3$) of the support wall conservatively considers the lower portion of the 2.5-inch thick wall only. The bending stress is

$$f_b = \frac{531,799}{970} = 548 \text{ psi.}$$

The allowable is

$$1.7 \times 0.6\, S_y = (1.7)(0.6)(19,400) = 19,788 \text{ psi.}$$

The margin of safety is computed as

$$M.S. = \left(\frac{19,788}{548}\right) - 1 = +35.1$$

The maximum shear stress is considered to be the load transferred to a single disk divided by the cross sectional area (A_s) of the lower section of 2.5-inch thick wall.

$$A_s = 22.09(2.5) = 55.225 \text{ in}^2$$

Using the distributed weight of 317.9 pounds/inch

$$f_Y = \frac{0.5(55)(317.9)(15.6)}{55.225} = 2{,}470 \text{ psi.}$$

The allowable shear is $F_v = 1.7 \times 0.4S_y = (1.7)(0.4)(19400) = 13{,}192$ psi, and the margin of safety is

$$M.S. = \left(\frac{13{,}192}{2{,}470}\right) - 1 = +4.3.$$

2.7.10.4 GTCC Waste Basket Support Wall - End Drop Evaluation

In the end drop orientation, the weight of eight 1-inch thick support disks and the 2.5-inch thick plates that comprise the basket walls transmit the load to the canister end through the 2.5-inch thick plates. This represents a total weight of 20,474 pounds (5,478 + 8,116 + 3,507 + 3,373). The GTCC waste and tubes are free standing and will be supported by the canister ends directly.

The axial compressive stress evaluation is the total load times the deceleration (56.1g) divided by the area of contact between the 2.5-inch thick plates and the canister end. The cross sectional area of the wall is computed as the perimeter of the 2.5-inch plates,

$$A = (12)(2.5)(8.44) + (4)(2.5)(10.94) + (4)(2.5)(17.09) = 533.5 \text{ in}^2.$$

The applied force, P, resulting from the 56.1 g deceleration experienced during the end drop is:

$$P = (56.1)(20{,}474) = 1{,}148{,}591 \text{ lbs.}$$

The allowable stress, F_a, for an axially loaded compression member is given by NF-3322.1(c)(2):

$$F_a = S_y\left(0.47 - \frac{Kl/r}{444}\right) = 8{,}542 \text{ psi},$$

where,

K = 0.65 for the end conditions,

l = 14.6, distance between disks,

$$r = \frac{d}{\sqrt{12}} = 0.72,$$

d = 2.5, thickness of support wall

Therefore, Kl/r = 13.18 < 120.

The allowable load across the section is calculated to be

$$P_y = 1.7\,A\,F_a = 1.7(533.5)(8{,}542) = 7{,}747{,}167 \text{ lb}$$

and the associated margin of safety is

$$M.S. = \left(\frac{7{,}747{,}167}{1{,}148{,}591}\right) - 1 = +5.7.$$

The support wall is adequate based on the above calculation.

2.7.10.5 GTCC Waste Basket Support Disk - End Drop Evaluation

In the end drop orientation, the weight of a 1-inch thick support disk will produce a bending moment and shear force in the 3/8 inch weld at the support disk/wall interface. To simplify the evaluation, a 1-inch by 1-inch section is considered. The axial force, F_y, on the weld is

$$F_y = \frac{Wg}{L} = \left(\frac{(422)(56.1)}{223.6}\right) = 105.9 \text{ lb},$$

where,

W = 422 lb, the weight of one disk,

L = 4(22.15) + 16(8.44), the perimeter of the weld,

g = 56.1 g.

The bending moment, M, at the weld is

$$M = F_y\left(\frac{d}{2}\right) = 635.4 \text{ inch} - \text{pounds},$$

where,

$$d = \frac{68.96}{2} - \sqrt{\left(\frac{39.03}{2}\right)^2 + \left(\frac{22.15}{2}\right)^2} = 12 \text{ inch, the greatest radial distance to the outer edge of the disk.}$$

A_w = 2(1) = 2 in.

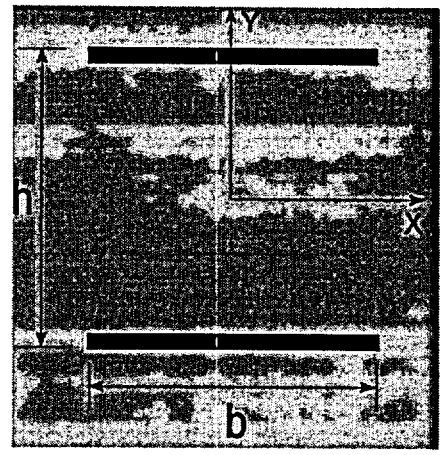

The section modulus, S_w, for the weld cross-section is

$$S_w = bh = 1\ \text{in.}^2$$

where,

$b = 1$ in.,

$h = 1$ in.

Therefore, the resulting bending force is calculated to be

$$F_b = \frac{M}{S_w} = 635.4\ \frac{\text{lb}}{\text{in}}$$

and the shear force is

$$F_v = \frac{F_y}{A_w} = 52.9\ \frac{\text{lb}}{\text{in.}}$$

Therefore, the resulting shear force applied to the weld is

$$F_r = \sqrt{F_b^2 + F_v^2} = 637.6\ \frac{\text{lb}}{\text{in.}}$$

The allowable shear stress in the base metal at the weld junction is

$$F_a' = (1.7)(0.4)F_y = (1.7)(0.4)(19{,}400) = 13{,}192\ \text{lb/in}^2$$

The required weld size is calculated as follows:

$$\frac{F_r}{F_a'} = \frac{637.6}{13{,}192} = 0.05\ \text{in.} < \tfrac{3}{8}\ \text{in.}$$

1. Elastic Buckling (Paragraph-1713.1.1, Code Case N-284)

a. Axial Compression Plus Hoop Compression

$(S_{\theta s} < 0.5\ S_{\theta s})$

56,071 > (0.5)(17,346); therefore, not applicable.

b. Axial Compression Plus Hoop Compression

$(S_{\theta s} \geq 0.5\ S_{\theta s})$

$[(S_{\theta s} - 0.5\ S_{heL})/(S_{\theta cL} - 0.5\ S_{heL})] + (S_{\theta s}/S_{heL})^2 \leq 1.0$

$$\frac{56{,}071 - (0.5)(47{,}927)}{668{,}435 - (0.5)(47{,}927)} + (17{,}346/47{,}927)^2 \leq 1.0$$

$0.1779 \leq 1.0$

therefore,

$Q1 = 0.1779 < 1.0$

c. Axial Compression Plus Shear

$(S_{\theta s}/S_{\theta cL}) + (S_{\theta\theta s}/S_{\theta\theta cL})^2 \leq 1.0$

$(56{,}071/668{,}435) + (24{,}313/176{,}487)^2 \leq 1.0$

$0.1029 \leq 1.0$

therefore,

$Q2 = 0.1029 < 1.0$

d. Hoop Compression Plus Shear

$$(S_{rs}/S_{reL}) + (S_{\theta\theta s}/S_{\theta\theta eL})^2 \leq 1.0$$

$$(17{,}346/49{,}165) + (24{,}313/176{,}487)^2 \leq 1.0$$

$$0.372 \leq 1.0$$

therefore,

$$Q3 = 0.372 < 1.0$$

e. Axial Compression Plus Hoop Compression Plus Shear

$$K = 1 - (S_{\theta\theta s}/S_{\theta\theta eL})^2 = 1 - (24{,}313/176{,}487)^2 = 0.981$$

and, therefore, Equation B (above) becomes:

$$+ [(17{,}346/(0.981)(48{,}465)]^2 = 0.1832$$

therefore,

$$Q4 = 0.1846 < 1.0$$

2. Inelastic Buckling (Paragraph-1713.2.1, Code Case N-284)

a. Axial Compression Plus Shear

$$(S_{rp}/S_{reL})^2 + (S_{\theta\theta p}/S_{\theta\theta eL})^2 \leq 1.0$$

$$(56{,}071/668{,}435)^2 + (24{,}313/176{,}487)^2 \leq 1.0$$

$$0.026 \leq 1.0$$

therefore,

$$Q5 = 0.026 < 1.0$$

b. Hoop Compression Plus Shear

$$(S_{\theta p}/S_{reL})^2 + (S_{\theta\theta p}/S_{\theta\theta eL})^2 \leq 1.0$$

$$(17{,}346/49{,}155)^2 + (24{,}313/176{,}487)^2 \leq 1.0$$

$$0.144 \leq 1.0$$

therefore,

$$Q6 = 0.144 < 1.0$$

The results of the hand calculation of load case "J_T" are identical to the results in Table 2.10.5-1 that were calculated by the NAC proprietary computer program, which performs the Code Case N-284 buckling evaluation. Thus, the computer program results in Table 2.10.5-1 and the buckling stability of the NAC-STC inner shell are verified.

2.10.5.4 Buckling Evaluation of the Inner Shell for the Canistered Fuel Configuration of the NAC-STC

In the canistered fuel configuration for a side drop load condition, the fuel load is applied to the support disks which transmit the load to the canister and then to the inner shell of the NAC-STC. Thus, the loading on the cask inner shell for a side drop load condition is different than that for the directly loaded fuel configuration where the support disks directly load the cask inner shell. To demonstrate that the NAC-STC will resist buckling of the inner shell in the side drop, the methodology described in 2.10.5.3 will be applied with stresses determined for the side drop using the canistered fuel configuration. The canistered fuel configuration loading on the cask cavity for an end drop condition is essentially the same as for the directly loaded fuel configuration, so no additional evaluation is required.

The section with the maximum compressive stress (hoop and axial) for the inner shell and transition shell occurs at the weld connecting the inner shell to the bottom forging). As a result of computing the linearized stress at this section, the maximum axial stress is -12,800 psi and the maximum hoop stress is -16,200 psi. The corresponding shear stress is 1,100 psi. These values are obtained from Table 2.7.1.2-1. These stresses are for the 30-ft side drop condition and they envelop the 1-ft side drop condition. Thermal compressive forces are included by using the largest thermal membrane stresses from Tables 2.10.4-5, 2.10.4-6, and 2.10.4-7.

Step 1

$S_\phi = -12,800 + (-2,700) = -15,500$ psi

$S_\theta = -16,200 + (-1,800) = -16,700$ psi

$S_{\phi\theta} = 1,100 + 1,200 = 2,300$ psi

Step 2

$FS(S_\phi) = 20,770$ psi

$FS(S_\theta) = 22,378$ psi

$FS(S_{\phi\theta}) = 3,082$ psi

Step 3

$\alpha_{\phi L} = 0.393$

$\alpha_{\theta L} = 0.800$

$\alpha_{\phi\theta L} = 0.800$

Table 2.10.5-1 Buckling Evaluation Results NAC-STC Inner Shell (continued)

Load Case	Load Condition	Analysis Section Location	Axial Stress (psi)	Hoop Stress (psi)	Inplane Shear Stress (psi)	Elastic Buckling Interaction Equations				Plastic Buckling Interaction Equations	
						Q1	Q2	Q3	Q4	Q5	Q6
A_T	Heat	Transition	-2956	-5218	-694	.00	.02	.26	.00	.00	.07
B_T	Cold	Transition	-2988	-4135	503	.00	.02	.21	.00	.00	.04
C_T	1-Ft Top End	Transition	-2960	-5727	0	.00	.02	.29	.00	.00	.08
D_T	1-Ft Bottom End	Transition	-2955	-6581	0	.00	.02	.33	.00	.00	.11
E_T	1-Ft Side	Transition	-7482	-3994	6037	.06	.06	.21	.06	.01	.05
F_T	1-Ft Top Corner	Transition	-9626	-1473	3679	.04	.08	.07	.04	.01	.01
G_T	1-Ft Bottom Corner	Transition	-10422	-1704	-3467	.05	.08	.09	.05	.01	.01
H_T	30-Ft Top End	Transition	-2984	-14144	0	.00	.01	.48	.00	.00	.23
I_T	30-Ft Bottom End	Transition	-2973	-14362	0	.00	.01	.48	.00	.00	.23
J_T	30-Ft Side	Transition	-16445	-10356	14515	.17	.10	.37	.18	.03	.14
K_T	30-Ft Top Corner	Transition	-26632	-898	9400	.10	.14	.04	.10	.13	.01
L_T	30-Ft Bottom Corner	Transition	-27565	-2122	-9183	.11	.14	.08	.11	.17	.01
M_T	30-Ft Top Obliq. (75°)	Transition	-13488	-9023	15240	.13	.09	.32	.13	.02	.11
N_T	30-Ft Bott. Obliq. (15°)	Transition	-30799	-1935	-7402	.12	.16	.07	.13	.47	.01
O_T	30-Ft Bott. Obliq. (75°)	Transition	-17164	-10107	-15101	.17	.10	.36	.18	.03	.14

.Table 2.10.5-2Geometry Parameters for the NAC-STC Inner Shell and Transition Sections

Parameter	Inner Shell	Transition Section[1]
R = radius (in) [to centerline of shell]	36.25	36.25
t = thickness (in)	1.5	1.50
$(Rt)^{0.5}$	7.37	7.37
L = length (in)	161.00	161.00
L = 2pR = circumference (in)	227.8	227.8
M = $L/(Rt)^{0.5}$	21.83	21.83
M = $L/(Rt)^{0.5}$	30.89	30.89
M = lesser of M or M	21.83	21.83
= Poisson's Ratio	0.275	0.275

[1] Conservatively consider the thinner portion of the Transition Section.

.Table 2.10.5-3Capacity Reduction Factors for the NAC-STC Inner Shell and Transition Sections

Capacity Reduction Factor	Temperature (°F)		
	70	338	353
(SA-240, Type 304 Stainless Steel)			
$a_{\phi L}$ (axial)	0.267	0.207	0.207
$a_{\phi L}$ (hoop)	0.8	0.8	0.8
$a_{\theta L}$ (shear)	0.8	0.8	0.8
(SA-240, Type XM-19 Stainless Steel)			
$a_{\phi L}$ (axial)	0.517	0.393	0.389
$a_{\phi L}$ (hoop)	0.8	0.8	0.8
$a_{\theta L}$ (shear)	0.8	0.8	0.8

.Table 2.10.5-4 Fabrication Tolerances for the NAC-STC Inner Shell

Requirement	Parameter	Inner Shell Data (in)
	Maximum Inside Diameter (I.D.)	71.06
	Minimum I.D.	70.96
	Nominal I.D.	71.00
NE-4221.1	a) (Max I.D. - Min I.D.)	0.10
	b) (0.01) x (Nominal I.D.)	0.710
	Tolerance Check	Yes
	(a < b)	(0.10 in < 0.710 in)
	Nominal Shell Thickness	1.50
	Minimum Shell Thickness	1.48
	Shell Length	161.00
	Nominal Shell Outside Diameter (O.D.)	74.00
	Minimum Shell O.D.	73.92
NE-4221.2	c) Permissible Deviation, e (Figure -4221.2-1)	0.54
	d) Actual Deviation[1]	0.04
	Tolerance Check	Yes
	(d < c)	(0.04 in < 0.54 in)

[1] (Nominal O.D. - Minimum O.D.)/2 = (74.00 - 73.92)/2 = 0.04

.Table2.10.5-5 Material Properties for Buckling Analysis Input

Parameter[1]/Temperature (°F)	70	338	353
(SA-240, Type 304 Stainless Steel)			
E (psi)	28.3×10^6	26.7×10^6	26.7×10^6
S_y (psi)	30.0×10^3	22.0×10^3	21.7×10^3
(SA-240, Type XM-19 Stainless Steel)			
E (psi)	28.3×10^6	26.7×10^6	26.7×10^6
S_y (psi)	55.0×10^3	42.6×10^3	42.2×10^3

[1] Section 2.3.2

Table 2.10.5-6 Upper Bound Buckling Stresses

Load Condition		70°F	338°F	353°F
(SA-240, Type 304 Stainless Steel)				
Elastic, Upper Bound Compressive Stress	Normal	15,000	11,320	10,960
$S_{\|}$ or $S_{\|}$ (psi)	Accident	22,390	16,900	16,343
Elastic, Upper Bound In-Plane Shear Stress	Normal	9,000	6,795	6,580
S_{θ} (psi)	Accident	13,434	10,140	9,806
(SA-240, Type XM-19 Stainless Steel)				
Elastic, Upper Bound Compressive Stress	Normal	27,500	21,800	21,300
$S_{\|}$ or $S_{\|}$ (psi)	Accident	41,040	32,550	31,790
Elastic, Upper Bound In-Plane Shear Stress	Normal	16,500	13,080	12,780
S_{θ} (psi)	Accident	24,620	19,530	19,070

Table 2.10.5-7Theoretical Elastic Buckling Stress Values (Temperature Independent Form)

Elastic Buckling Stress	Inner Shell	Load Description
$S_{\phi eL}$	0.025035E	axial
$S_{\theta eL} = S_{reL}$	0.001841E	hoop, without end pressure
S_{heL}	0.001795E	hoop, with end pressure
$S_{r\theta eL}$	0.00661E	shear

Table 2.10.5-8 Theoretical Elastic Buckling Stresses for Selected Temperatures (SA-240, Type 304 and SA-240, Type XM-19 Stainless Steel)

Parameter	Theoretical Elastic Buckling Stress (psi)		
		Transition Section	Inner Shell
Modulus of Elasticity	T = 70°F E = 28.3 x 10^6	T = 338°F E = 26.7 x 10^6	T = 353°F E = 26.7 x 10^6
$S_{\phi eL}$	708,490	669,186	668,435
$S_{\theta eL} = S_{reL}$	52,100	49,213	49,155
S_{heL}	50,800	47,980	47,927
$S_{\phi\theta eL}$	187,060	176,685	176,487

3.0 THERMAL EVALUATION

3.1 Discussion

The NAC-STC is designed to safely transport intact spent fuel assemblies in two configurations. The fuel assemblies may be directly loaded into a fuel basket installed in the cask cavity (uncanistered) or sealed in a transportable storage canister (canistered). The design basis fuel assemblies for the uncanistered configuration are the Westinghouse 17 x 17 or 15 x 15 PWR fuel assemblies. These fuel assemblies bound smaller array Westinghouse, and similar Babcock & Wilcox, and Combustion Engineering PWR fuel assemblies. In the canistered configuration, the NAC-STC can transport up to 36 Yankee Class fuel assemblies. In the uncanistered configuration, the NAC-STC can transport 26 directly loaded PWR fuel assemblies. The NAC-STC can also transport Greater Than Class C waste and the reconfigured fuel assembly in the canistered configuration.

This chapter demonstrates that the NAC-STC with the design basis payloads meets the thermal performance requirements of 10 CFR 71, Sections 71.71 and 71.73, and IAEA Safety Series No. 6.

During normal transport and hypothetical accident conditions, the cask must reject the fuel decay heat to the environment without exceeding the operational temperature ranges of the cask seals or other components important to safety. In addition, fuel rod integrity must be maintained for normal transport conditions. This is accomplished by maintaining the fuel at a sufficiently low temperature in an inert atmosphere to preclude thermally induced fuel rod cladding deterioration. Transport temperatures below 380°C are sufficient to deter this type of fuel degradation (PNL-4835/UC-85). The maximum fuel rod cladding temperature remains below 380°C under normal transport conditions. For hypothetical accident conditions, temperatures below 649°C are sufficient to prevent fuel degradation (PNL-4555). The NAC-STC maximum fuel rod cladding temperature remains below 649°C (1200°F) during the hypothetical accident. Finally, the thermally induced stresses, in combination with pressure and mechanical load stresses, must be maintained below allowable stress levels.

Heat is transferred from the NAC-STC to the environment by passive means only. No forced cooling is used. Heat is transferred from the fuel assemblies to the fuel basket tubes, and through the tubes to the fuel basket support disks and thermal heat transfer disks by conduction, convection, and radiation. Heat is transferred through the fuel basket support disks and thermal

heat transfer disks by conduction. Radiation, convection, and conduction are the means by which heat is transferred from the support disks and heat transfer disks to the cask cavity inner wall, or the canister wall. For the canistered fuel configuration, heat is transferred by radiation, convection, and conduction from the canister wall to the cavity wall. From the cask cavity inner wall, heat is conducted first through the lead gamma shield and then through the cask outer shell. The outer shell is surrounded by a neutron shield, which conducts the heat to the neutron shield surface, primarily through the copper/stainless steel fins located within the radial neutron shield. At the top of the cask, heat is conducted through the inner lid, which contains solid neutron shield material, and through the outer lid. There is a very small gap between the lids where the means of heat transfer are conduction, convection, and radiation. The bottom forging and neutron shield conduct the heat to the bottom of the cask. The radial neutron shield stainless steel shell is exposed to the environmental ambient temperature. Heat is removed from the cask radial surface by convection and radiation. Because of the impact limiters, essentially no heat is removed from the ends of the cask. The bounding thermal conditions for the analysis required by 10 CFR 71 and IAEA Safety Series No. 6 under normal transport conditions for the NAC-STC are presented in Table 3.1-1. The combinations of these thermal conditions are described in Section 3.4.2.1.

3.1.1 Directly Loaded (Uncanistered) Fuel

The directly loaded design basis fuel assembly has a burnup of 40,000 MWD/MTU and a cool time of 6.5 years. This results in a heat load for 26 assemblies of 22.1 kilowatts, or an individual assembly decay heat limit of 0.85 kilowatts. The thermal analysis for the uncanistered fuel uses four separate finite element models. For normal transport conditions, the cask body and basket are analyzed with two separate finite element models using the ANSYS program.

Since the fuel assembly arrangement is symmetric about two axes, a quarter circumferential section of the entire cask is detailed in a three-dimensional model that is evaluated under steady state normal transport conditions. For this model, the centerline of the basket is coincident with the centerline of the cask body. The gap between the basket and the inner shell does not change with respect to the circumference of the basket. This model is analyzed to determine the maximum temperature condition for the structural components associated with the ends of the cask body (i.e., lids, top and bottom forgings, seals, and the XM-19 transition). Two sets of analyses are performed with this model; one analysis using helium as the cavity gas and a second analysis using air as the cavity gas. While the NAC-STC is evacuated and backfilled with

In the three dimensional model, the fuel tube, including the BORAL sheet and its cladding, is also modeled using effective conductivity. The effective conductivity is determined by a two dimensional thermal model. The model includes the fuel tube, the BORAL sheet, helium gaps on both sides of the BORAL sheet and a helium gap between the stainless steel cladding for BORAL and the support disk or heat transfer disk.

Classical analysis is used to calculate temperatures during the hypothetical accident condition fire transient for the various components of the fuel, canister basket, canister, and cask. The methodology is described in Section 3.5.1.1.

The transportable storage canister may contain one or more reconfigured fuel assemblies. A two-dimensional finite element model is generated using the ANSYS program to determine the temperature distribution of the reconfigured fuel assembly. The model comprises the fuel rods, fuel tubes, the shell casing (the square tube with the same external dimensions as an intact fuel assembly) and the gas (helium) occupying the gap between fuel rod and tube, the space between fuel tubes and the gap between shell casing and the fuel assembly tube.

3.1.3 Canistered Greater Than Class C Waste

Greater than Class C (GTCC) waste may be transported in the transportable storage canister. GTCC waste is comprised of reactor core components placed inside of containers having the same geometry as the design basis Yankee class fuel assemblies. The GTCC waste containers are installed in a basket that can accommodate up to 24 waste containers.

The thermal output of the GTCC waste is 2.9 kilowatts. Component temperatures for the GTCC waste basket are conservatively calculated using a thermal resistance model. The calculated temperatures are then used to determine the material properties in the structural analysis of the GTCC basket.

The thermal output of the GTCC waste (2.9 kW) is significantly less than the design basis thermal load for directly loaded fuel and for canistered fuel. Consequently, the temperature effects on the NAC-STC cask body and the canister due to the GTCC waste are bounded by the temperatures produced in the cask by the design basis fuel.

Figure 3.1-1 Definition of the Gap Between the Basket and the Inner Shell for the Horizontal Position of the Cask.

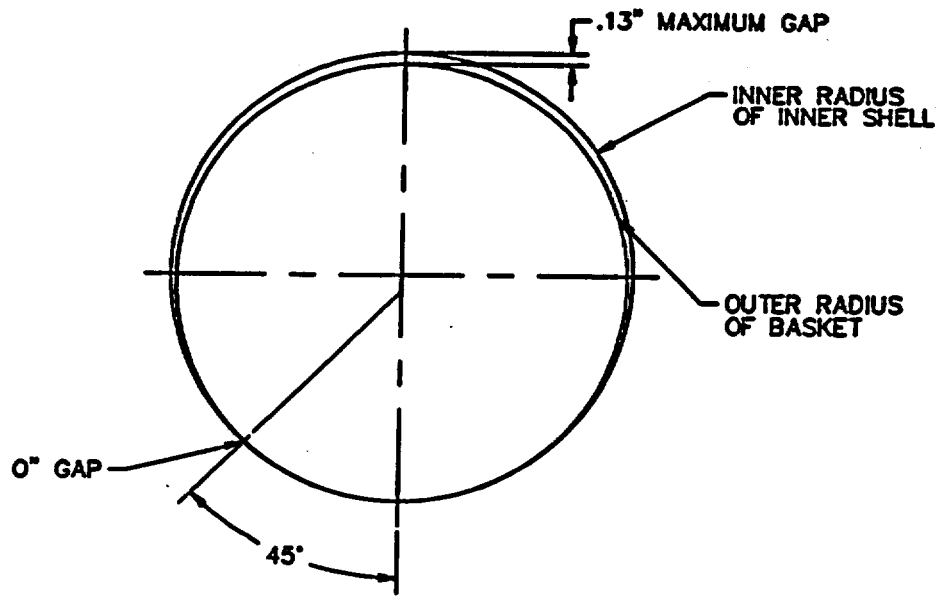

Table 3.2-11 Thermal Properties of BORAL Composite Sheet

Property (units)/ Temperature	Value 100°F	Value 500°F
Conductivity[1] (Btu/hr-in-°F)		
Aluminum Clad	7.805	8.976
Core Matrix	5.136	5.698
Emissivity[1,2]	0.15	0.15

1. AAR Advanced Structures, standard specification for BORAL composite BRJREVO-940107.
2. The emissivity of the aluminum clad of the BORAL sheet range from 0.10 to 0.19 based on the BORAL specification. An average value of 0.15 is used.

This Page Intentionally Left Blank

material in a 338°F oven for 145 days. During the test, less than a 4 percent weight loss occurred, with a significant fraction of the weight loss occurring in the first 30 days at temperature. Additional tests were performed on samples that were enclosed in stainless steel by Hitachi Zosen Corporation (Asano). In these tests, it was found that at a temperature of 175°C (347°F), a weight loss of less than 1.5 percent was measured after 73 days at temperature. A separate test performed at a temperature of 150°C (302°F) produced a weight loss of less than 0.5 percent after 73 days. After 56 weeks at 150°C, the weight loss was approximately 1.2 percent. Hitachi Zosen extrapolated their test data and predicted a weight loss of less than 2 percent for a 20-year exposure period at 150°C.

The peak calculated temperature experienced in the NAC-STC neutron shield is 284°F, which occurs in the transport of directly loaded (uncanistered) fuel having air as a cover gas. This temperature is 54°F lower than the product developer's test temperature. This peak temperature occurs only at a localized area with the remainder of the neutron shield material well below the 284°F value. As noted above, the product developer and the Hitachi Zosen tests were carried out at a constant bulk mass temperature. During long term storage operations, temperatures will decrease as the storage period increases, resulting in less limiting neutron shielding operations than those predicted by the test cases described above.

From an analysis of the test results, it is expected that the maximum weight loss of the neutron shield will be less than 2 percent after a 20-year period. Based on the dose rate contributions for neutrons and gammas presented in Table 5.1-10, a 2 percent reduction in the effectiveness of the neutron shield will not result in dose rates exceeding the normal transport dose rate limits of 10 CFR 71. Also, as specified in Section 8.1.5.3, both neutron and gamma dose rates will be measured and recorded prior to transport to verify that they are less than the 10 CFR 71 normal conditions of transport dose rate limits. The radial neutron shield must provide sufficient shielding to satisfy 10 CFR 71 requirements, however, shielding provided by the NS4FR material in the lid and bottom of the cask is not required for the cask to satisfy dose rate regulatory limits off of the ends of the cask. The neutron shielding in the lid and bottom reduces operator exposure during loading and handling of the cask and is currently provided in the NAC-STC as an enhanced capability to satisfy ALARA goals.

The analyses of Sections 3.4.2 and 3.4.3 show that the maximum temperature of the radial neutron shield is 284°F with air as a cover gas, and 285°F with helium as a cover gas for the directly loaded fuel and 270°F for the canistered fuel with helium as a cover gas. These

temperatures are less than the maximum safe operating temperature of 338°F during normal transport conditions. The maximum normal operating temperature for the NS4FR material in the lid is 181°F, well within the safe operating temperature range. The maximum normal operating temperature for the NS4FR in the bottom of the cask is 403°F. This temperature is higher than the manufacturers recommended operating temperature of 338°F. Section 2.10.10.2 shows that the maximum pressure that could result from off-gassing would result in an insignificant stress in the surrounding steel. However, since the NS4FR material in the cask bottom is not needed to satisfy transport dose rate limits, because the material is completely contained within a welded steel structure preventing loss of mass to the atmosphere, and because the resulting stresses in the surrounding steel would be insignificant, the calculated temperatures in the cask bottom neutron shield do not adversely impact the safety of the NAC-STC. Therefore, based on the fact that there is no impact to safety and that the thermal results are conservatively high in the cask bottom, the NS4FR temperature of 403°F is acceptable. The neutron shields are considered lost after the fire accident for shielding purposes, removing the necessity for them to remain within their safe operating range. (See Section 5.1.4 for a discussion of the effect of a loss of the neutron shield on the cask dose rates.) The radial neutron shield is conservatively assumed to remain intact throughout the hypothetical fire and be removed at the end of the fire for the thermal analysis. This assumption is conservative because it results in larger quantities of energy being transferred into the cask during the fire accident, and lesser quantities being rejected from the cask after the 30 minute fire.

The safe operating range of the aluminum heat transfer disk is based on the integrity of the aluminum being maintained. The aluminum heat transfer disk is not a structural component to transfer load within the basket. Based on the MIL-HDBK-5F, aluminum at 600°F retains component performance. The operating limit for the aluminum heat transfer disk is taken to be 600°F. For both directly loaded and canistered fuel configurations the maximum aluminum disk temperature is below 600°F.

volumetric heat generation. At the boundary of this square cross section, the temperature is constrained to be uniform. The expression for the maximum temperature is given by

$$T_c = T_e + 0.29468 \frac{Qa^2}{K_{eff}}$$

where

T_c = the temperature at the center of the fuel (°F)
T_e = the temperature applied at the exterior of the fuel (°F)
Q = volumetric heat generation rate (Btu/hr-in^3)
a = half length of the square cross section of the fuel (inch)
K_{eff} = effective thermal conductivity for the isotropic homogeneous fuel material (Btu/hr-in-°F)

Using the maximum temperature, located at the center of the fuel, from the detailed fuel assembly model, the above expression is used to determine the K_{eff} for an isotropic homogeneous representation of the fuel assembly. This value is used in both the quarter model (Section 3.4.1.1.1) and the 180-degree section model (Section 3.4.1.1.2) for the fuel assembly.

Two analyses and K_{eff} determinations are performed; a K_{eff} corresponding to air in the cavity in which the fuel assembly model used air and a K_{eff} for helium in the cavity in which the fuel assembly model used helium as the cavity gas.

3.4.1.1.3.3 Determination of Maximum Fuel Clad Temperature

Two models are needed to determine the cask maximum fuel rod cladding temperature. The two models are:

1. 180-degree section model of the cask body - ANSYS, 3-D Model (Section 3.4.1.1.2)

2. Detailed two-dimensional model of the fuel assembly.

The three-dimensional ANSYS model from Section 3.4.1.1.2 is used to determine the maximum fuel tube temperature which is applied to the exterior of the fuel assembly model. Since the cavity gas can be air or helium, two separate analyses are performed. For the case of the air in the cavity, the maximum fuel tube temperature from the transport condition using air in the cavity is used as the exterior boundary condition for the fuel assembly model. The fuel assembly model used the same material properties as the three-dimensional model with air in the cavity. For the helium in the cavity, the analyses are repeated but using the properties for helium in the cavity for both models.

3.4.1.2 Analytical Model for Canistered Fuel

The thermal analysis for the canistered design basis fuel uses three finite element ANSYS models. A three-dimensional model ("three dimensional canister model") is employed to evaluate the cask in a horizontal position with the canister basket in contact with the canister which is, in turn, in contact with the cask inner shell. The model is comprised of the fuel assemblies, fuel tubes, stainless steel support disks, aluminum heat transfer disks, the canister shell, lids and bottom plate, the aluminum honeycomb spacers at the top and bottom of the canister, the NAC-STC inner shell, lead, outer shell, neutron shield and neutron shield shell. The fuel regions and the fuel tubes with BORAL plates in the three-dimensional model are modeled using effective conductivities. The effective conductivity of the fuel is determined by a second model ("fuel model), which is a detailed two-dimensional thermal model of the fuel assembly. The model includes the fuel pellets, cladding and gas (considered to be helium) occupying the gap between the fuel pellets and cladding. A third model ("fuel tube model") is used to determine the effective conductivities of the tube wall and BORAL plate. These models are described in Sections 3.4.1.2.1 through 3.4.1.2.3.

The thermal analysis for the reconfigured fuel assembly uses the two dimensional reconfigured fuel model. The model is described in Section 3.4.1.2.4. A classical thermal analysis is performed for the Greater Than Class C waste canister using a thermal resistor model, as described in Section 3.4.1.2.5.

3.4.1.2.1 Three Dimensional Canister Model

The 3-D canister model is a half symmetry finite element model constructed using ANSYS Revision 5.2. The model considers the fuel assemblies, fuel tubes, stainless steel support disks, aluminum heat transfer disks, the canister shell, lids and bottom plate, the aluminum honeycomb spacers at the top and bottom of the canister, the NAC-STC inner shell, lead, outer shell, neutron shield and neutron shield shell. The model is shown in Figure 3.4-20. The top and bottom portions of the NAC-STC (lid, top forging, bottom plate and bottom forging) are not included in the model because these components are enclosed by the Impact Limiters and essentially no heat is rejected through these components (both ends of the model are considered adiabatic). As

This Page Intentionally Left Blank

where

q = heat rate (Btu/hr)
A = area (in^2)
L = length of model (in)
ΔT = Temperature difference across the model (°F)
k = effective conductivity (Btu/hr-in-°F)

The temperature-dependent conductivity (k) is determined by varying the temperature constraints at one boundary of the model and re-solving for the heat rate (q) and temperature difference. The effective conductivity for the parallel path are calculated based on area ratio of material.

3.4.1.2.4 Two Dimensional Reconfigured Fuel Assembly Model

The two-dimensional reconfigured fuel assembly model is generated to calculate the temperature distribution of the hottest cross-section (1 inch long in the cask axial direction) of the Reconfigured Fuel Assembly (RFA). Because of symmetry, the model considers one-fourth of a cross-section of the RFA. The model is shown in Figure 3.4-24. ANSYS 'PLANE55' conduction elements and "LINK31" radiation elements are used in the model. The model includes a total of 16 fuel rods, 16 fuel tubes, the shell casing (the square tube with the same external dimensions as an intact fuel assembly) and the cover gas (considered to be Helium). Each fuel rod is located inside a stainless steel fuel tube. The fuel rod, which consists of the zircaloy clad, the fuel pellet (UO_2) and a small gap between the clad and fuel pellet, is modeled as a solid rod with the thermal conductivity of the UO_2. This is conservative since the conductivity of UO_2 is less than that of the zircaloy and the main interest of the fuel rod is the cladding temperature. The gas between the fuel rod and the fuel tube, the gas between fuel tubes and the gas outside of the shell casing are considered to be helium.

As shown in Figure 3.4-24, radiation elements are defined between tubes and from tubes to the inner surface of the shell casing. A form factor of 1 is used for the radiation elements. Effective emissivity is computed using the following formula (Keith) based on corresponding material emissivities:

$$\epsilon_{eff} = 1/(1/\epsilon_1 + 1/\epsilon_2 - 1)$$

where ϵ_1 & ϵ_2 are the emissivities of two parallel plates.

Radiation between the fuel rod and the fuel tube is conservatively ignored. Radiation between the shell casing and the inner surface of the fuel assembly tube is accounted by establishing effective conductivities for the gas in the gap using the method described in Section 3.2.2.3.

Volumetric heat generation (Btu/hr-in^3) based on the design heat load of 0.0016 kW/pin is applied to the fuel rod elements. An active fuel length of 91 inches and a peaking factor of 1.15 are used.

$$\text{Heat generation rate} = Q/V$$
$$= 0.6595 \text{ Btu/hr-in}^3$$

where,

Q = heat rate per pin (unit height)

$= (0.0016)(3413)(1.15)/(91) = 0.069$ Btu/hr

V = volume of pin (unit height)

$= \pi\, 0.365^2/4 = 0.1046$ inch^3

Boundaries of the model at planes of symmetry (at X=0 and at Y=0) are considered to be adiabatic. The temperature at the right and top boundaries (at X=3.9 inch and at Y=3.9 inch) of the model is constrained to be uniform based on the maximum calculated temperatures of the fuel assembly tube for the design basis Yankee Class fuel assembly. This is conservative since the heat load for the RFA (0.102 kW) is less than one-third of the heat load for the design basis fuel (0.347 kW).

3.4.1.2.5 Greater Than Class C Waste Model

The Greater Than Class C waste canister and containers thermal analysis is classically performed using a thermal resistor model. The steady state solution for the model is obtained using an iterative process. An initial temperature distribution is defined to initialize the boundary conditions and the equilibrium temperature values are based on the resistances of the model. The iterative process is continued until the differential between the initial assumed temperature distribution and the equilibrium temperature is small (<0.5°F).

The basket structure within the waste canister that supports the waste containers is "cross" shaped, rather than symmetrical in the radial direction. Consequently, an equivalent cylindrical geometry is calculated and applied in the model.

The model is used to calculate the temperature in the waste basket and support disks and maximum temperature of the waste tubes in normal conditions with full solar insolance.

The maximum temperature of the waste tubes is calculated assuming that waste containers and tubes are a solid, homogeneous cylinder. An effective conductivity is found for this cylinder by assuming heat transfer radially through the waste region of the basket by conduction through the tube walls. The centerline temperature of the homogeneous cylinder is calculated by assuming the cylinder has a surface temperature equal to the basket inner wall temperature. The effective conductivity is temperature dependent. Therefore, the calculation of the centerline temperature is an iterative process.

As noted in Section 3.1, the thermal output of the Greater Than Class C waste is 2.9 kilowatts (thermal). This thermal load is less than that imposed on the NAC-STC by the design basis fuel loading in either the directly loaded or canistered configurations. Consequently, the maximum NAC-STC component temperatures for the canistered GTCC waste are bounded by the design basis fuel loadings.

3.4.1.3 Test Model

NAC did not create a thermal test model. The methods previously described have been used in previous transport licensing and are sufficient to show that the NAC-STC meets the criteria set forth in Section 3.4.

3.4.2 Maximum Temperatures

This Section presents the maximum component temperatures for the directly loaded and canistered fuel configurations, and for the Greater Than Class C waste configuration. Temperatures are calculated using the models described in Section 3.4.1.

3.4.2.1 Maximum Temperatures for the Directly Loaded Fuel Configuration

Using the thermal models described, temperatures for the cask body, basket, and fuel rod cladding are determined for three normal transport conditions: (1) 22.1-kW decay heat load, 100°F ambient temperature and solar insolance); (2) 22.1 kW decay heat load, -40°F ambient temperature, no insolance; and (3) 22.1 kW decay heat load, -20°F ambient temperature, no insolance. The cask body maximum component temperatures are listed in Tables 3.4-1, 3.4-2, and 3.4-3. Maximum fuel basket temperatures are illustrated in Figures 3.4-11 through 3.4-14 for both helium and air in the cavity, while the maximum fuel rod cladding temperatures are listed in Table 3.4-1. The cask components, which include valves, o-rings, bolts, etc., are not explicitly modeled. The temperatures are obtained by evaluating the cask body model at the component locations. Temperature of materials having specified safe operating ranges are listed in Table 3.4-4. Maximum temperatures for the major cask components for the cavity gas of air or helium are listed in Table 3.4-5.

3.4.2.2 Maximum Temperatures for the Canistered Fuel Configuration

Using the thermal models described in Section 3.4.1.2, temperatures for the major components of the cask body, canister, canister basket, and fuel cladding are determined for the normal conditions of transport. The NAC-STC cask body maximum allowable component temperatures are shown in Section 3.3.2, and Table 3.4-4. The maximum temperatures of the major NAC-STC components, the canister, canister basket components, and fuel rod cladding temperatures, are shown in Table 3.4-1 and 3.4-2. Maximum temperatures for the major cask components in the helium atmosphere are listed in Tables 3.4-1 and 3.4-5. For the reconfigured fuel assembly, the maximum calculated temperatures for the shell casing, fuel tube and the fuel clad are 543°F, 563°F and 563°F respectively.

3.4.2.3 Maximum Temperatures for the Canistered Greater Than Class C Waste

The Greater Than Class C waste canister is constructed of 304 stainless steel. Since the thermal heat load of the waste is low (2.9 kilowatts, thermal), no aluminum heat transfer disks are required. Using the classical analysis described in Section 3.4.1.1.5, the maximum temperatures for the principal components of the waste canister are:

Waste Tube	541°F
Support Disk	373°F
Outer Canister Wall	387°F

These maximum temperatures are lower than those for the canistered fuel configuration. Consequently, the canistered fuel thermal analysis bounds the waste configuration.

3.4.3 Minimum Temperatures

The minimum temperatures in the cask occur with no heat load and -40°F, yielding a uniform -40°F temperature distribution throughout the NAC-STC package.

3.4.4 Maximum Internal Pressure

This section presents the maximum internal pressure calculated for the directly loaded fuel and canistered fuel transport configurations.

3.4.4.1 Maximum Internal Pressure for Directly Loaded Fuel

The calculation of the maximum operating pressure for the NAC-STC directly loaded fuel configuration assumes 26 typical Westinghouse 17 x 17 PWR fuel assemblies, using an assumed maximum burnup of 45,000 MWD/MTU which would result in the highest fission product gas volumes in the fuel rod and 100 percent fuel rod failure. Calculation of the NAC-STC cavity maximum operating pressure utilizes the gas volume of the cavity, the temperature of the cavity gases and the volume of gases released by the fuel to the cavity. The characteristics of the Westinghouse 17 x 17 fuel assembly pertinent to this analysis are:

Fuel Rod Outer Diameter	0.374 in
Fuel Rods/Fuel Assembly	264 (25 guide tubes ignored)
Fuel Pellet Diameter	0.3225 in
Fuel Rod Clad Outer Diameter	0.374 in
Fuel Rod Clad Inner Diameter	0.329 in
Fuel Rod Length	151.6 in
Active Fuel Length	144.0 in
Plenum Volume	1.25 in^3
Fill Pressure (at manufacture, 20°C)	500 psig
End Fitting Volume/Assembly	97.6 in^3
Grid Spacer Volume/Assembly	43.2 in^3
Cask Cavity Inner Diameter	71.0 in
Cask Cavity Length	165.0 in

$$V_{ct} = \text{Total Cavity Volume}$$
$$= (\pi/4)(71.0)^2(165.0)$$
$$= 653{,}267 \text{ in}^3$$

Basket Outer Diameter	70.86 in
Support Disk Dimensions	31 @ 0.5 in, (26) 9.234 in square openings
Heat Transfer Disk Dimensions	20 @ 0.625 in, (26) 9.204 in square openings
Basket Upper Disk Dimensions	1 @ 1.0 in, (26) 8.75 in square openings
Basket Lower Disk Dimensions	1 @ 1.0 in, (26) 8.65 in square openings
Fuel Tube Outer Dimension	9.064 in square

Fuel Tube Inner Dimension	8.78 in square
Number of Tubes	26
Length of Fuel Tubes	155.2 in
Volume of Other Components	-
(Threaded rods, spacer nuts, etc.)	6523 in^3

V_d = Volume of basket (not including tubes)

$= [(31)(0.5)][(\pi/4)(70.86)^2 - 26(9.234)^2] +$
$[(20)(0.625)][(\pi/4)(70.86)^2 - 26(9.204)^2] +$
$[(1)(1.0)][(\pi/4)(70.86)^2 - 26(8.78)^2] +$
$[(1)(1.0)][(\pi/4)(70.86)^2 - 26(8.65)^2] +$
6523

$= 58{,}986\ in^3$

V_{st} = Volume of stainless steel/BORAL tubes

$= 26[(9.064)^2 - (8.78)^2]155.2$

$= 20{,}449$ in

V_b = Total basket volume

$= V_d + V_{st}$

$= 79{,}435\ in^3$

V_f = Volume of fuel assemblies

$= [26][(\pi/4)(0.374)^2 - (0.329)^2][(151.6)(289)] +$
$[26][(\pi/4)(0.3225)^2(144.0)(264)] + [26][97.6] + [26][43.2]$

$= 112{,}704\ in^3$

V_{gv} = Free gas volume in cask cavity

$= V_{ct} - V_b - V_f$

$= 461{,}128\ in^3$

V_{fg} = Fuel free gas volume

$$= 26(1.25)\left(\frac{514.7}{14.7}\right)(264)$$

$= 300{,}417 \text{ in}^3$

The gaseous fission product inventory can be determined from the ORIGEN-S fission product inventory and the Ideal Gas Law. Regulatory Guide 1.25 states that, of the gaseous fission product inventory in the fuel, 10 percent of all noble gases except krypton, 30 percent of the available krypton, and 10 percent of the I-127 and I-129 should be considered for release. Conservatively, a 30 percent release rate has been assumed for all of the fission product gases. The fission gas inventories available in the 45,000 MWD/MTU burnup fuel are listed below:

Element	Mass/Assembly	Atomic Wt (g/mole)
H^3	0.0205 g	3
Kr	216.48 g	85
Xe	3351.0 g	134
I^{127} & I^{129}	150.7 g	129

The fission gas inventories of the 45,000 MWD/MTU burnup fuel are larger than those of the 40,000 MWD/MTU fuel, and thus are more limiting.

The Ideal Gas Law can then be used to determine the volume of gas at room temperature and atmospheric pressure.

$$V = \frac{nRT}{P}$$

where

n = number of moles of gas

R = gas constant = $0.0821 \dfrac{\text{atm } \ell}{\text{mol } ^\circ\text{K}}$

T = temperature in °K = 293°K

P = pressure = 1 atm

$$V_{H^3} = \frac{26(0.3)\left(\frac{0.0205}{3}\right)(0.0821)(293)}{1} = 1.282\ \ell$$

$$= 78.2 \text{ in}^3$$