COMPLETE

POINT BEACH NUCLEAR PLANT
MODIFICATION REQUEST

MR Number 88-099*C

NOTE: Block numbers on this form correspond to paragraph numbers of Procedure QP 3-1. The use of black ink is required.

2.6 MODIFICATION REQUEST INITIATION

☐ UNIT 1 ☐ UNIT 2 ☒ COMMON FACILITIES

System: Aux Feedwater Location: Aux Feed Pump Room

Print Nos. M-217

Reason for Modification (Concise description of actual problem. List applicable reference documents):

☐ Plant Betterment ☐ Safety Issue ☒ Regulatory Requirement ☐ ALARA

☐ Other (Specify) _____

The existing minimum recirculation flowrate for each AFW pump is 30 gpm, this equates to ~8% of the BEP for the electric driven AFW pumps and ~6% of the BEP for the turbine driven AFW pumps. It is now recognized that to prevent inlet flow instabilities in centrifugal pumps that may lead to pump damage the minimum flow rate should be ~25% to 50% of the BEP. In response to NRC Bulletin 88-04 a commitment was made to increase the minimum recirculation flowrate of the AFW pumps. The recommended flow rate will be provided by Byron Jackson, pump manufacturer.

Proposed Change (Include sketches, effects on other components/systems, alternate approaches, installation/acceptance/completion date, if known.) Attach additional pages if needed.

Modify the AFW pump mini-recirc lines to provide the recommended flow rates.

Initiated By John A. Palmer Date 7/5/88

2.7 GROUP HEAD/SUPERVISOR Comments (include basis for due dates)

INITIAL EFFORT SHOULD INCLUDE ENSURING NRC HAS ACCEPTED 88-04 RESOLUTION RECOMMENDATIONS.

Priority: 1☐ 2☒ 3☐ 4☐ Required Due Date _____

☒ Recommended ☐ Not Recommended By WBJ Jammy Date 7/5/88

2.8 MODIFICATION ENGINEER

10CFR50.59 Review Required

☒ Yes ☐ No Initials WBJ

QA STATUS: A53

QA SCOPE

MICROFILMED

MAR 3 1992

Form QP 3-1.3
Rev. 1

QA SCOPING CLARIFICATION	MR NUMBER 88-099 B/C

1. QA Scope **QA SCOPE**

   [ ] Entire Modification
   [X] Parts of Modification (Explain in Section 4)

2. Criterion Q4

3. Justification Provide Emergency Core Cooling

4. Boundaries of QA Scope (if applicable)

   Full QA up to and Including the Flow Control Valve. The Design and Installation of Restraints should Meet Seismic 1 Requirements. Material Requirements shall Be Determined During Design phase.

5. Additional Considerations/Requirements

   [X] Nuclear Safety Related
   [ ] Environmental Qualification Required
   [ ] Other (Explain)

6. QA Requirements (for portions of MR listed in Section 4)

   Safety Related
   [X] Full QA (per 10CFR50 App B; 10CFR21; QAPM Part 1)

   Augmented Quality
   [ ] Regulatory Guide 1.97 Commitment
   [ ] Fire Protection QA (per 10CFR50 App J; QAPM App C)
   [ ] Radwaste Packaging QA (per 10CFR50 Subpart H; QAPM App D)
   [ ] Station Blackout QA (per Reg. Guide 1.155 App A)
   [ ] Other (Explain)

   QA Review [signature] Date 8/21/91

7. Changes (MR Step ~~2.20~~ Review)

   None

8. Contractor Involvement [X] Check if yes

   Expected Installation: [X] Outage: U2R17
   [ ] Other:

   QA Review [signature] Date 8/21/91

Form QAI 3.2-1
Revision 0

POINT BEACH NUCLEAR PLANT
MODIFICATION REQUEST

MR Number 88-099*C

2.9 EQRS

QA Status: ☒ QA-scope ☐ Non QA-scope

Clarification:

RECIRC LINE PIPING AND COMPONENTS TO BE QA UP TO AND INCLUDING RECIRC ISOLATION VALVES (1AF-15, AF-27, AF-40, 2AF-53). FIRST RESTRAINT DOWNSTREAM OF RECIRC ISOLATION VALVES TO BE QA. PIPING DOWNSTREAM O. RECIRC ISOLATION VALVES NEED NOT BE QA.

Signature A Zellen Date 10/28/89

2.10 SUPERVISOR - ADMINISTRATIVE SERVICES:

Charge Account Number(s): ~~0440-530-23XX34001~~ #91-530-23XX36517 JAP

2.11 MANAGER - PBNP Preliminary Review (Also indicate required approvals in Block 2.1(

☒ Proposal Satisfactory ☐ Cancelled

Engineering Evaluation (includes conceptual design):

a. ☐ EQRS
b. ☐ NPERS
c. ☒ NSEAS
d. ☐ Other in plant (specify) _____
e. ☐ Contractor (specify) _____
f. ☐ Not required

Directed by a, b, c, d (circle appropriate)

Comments: IDENTIFY CHANGES THAT NEED TO BE MADE TO ACCOMODATE THE INCREASED FLOW.

Assigned Responsible Engineer JPA JAP Liaison Engineer JAP HLL

Signature [illegible] Date 2/12/88

2.12 MODIFICATION ENGINEER Recommendations

(Also designate group engineering reviews in Block 2.14)

2.13 ENGINEERING EVALUATION/CONCEPTUAL DESIGN

See Form QP 3-1.4 if required

2.14 GROUP ENGINEERING EVALUATION REVIEWS

☒ M&C ☐ C/HP ☐ RE ☐ NPERS ☐ Other (spec) _____

☒ OPS ☒ I&C ☒ NSEAS ☐ NSEAS ☐ Not Required

Review Comments/Training Scope:

See attached comments 2/13/90

Scope of Training:

PLANT STATUS UPDATE - OPERATIONS PERSONNEL & DIA'S

Mod. Eng. Signature [illegible] Date 7/5/88

Copies to Krieser, Lipke, Newton - CWF 5/30/89

UNITED STATES
NUCLEAR REGULATORY COMMISSION
WASHINGTON, D. C. 20555

May 26, 1989

~~A137~~
P2NRC2.488-04

Docket Nos. 50-266
and 50-301

RECEIVED MAY 30 1989

Mr. C. W. Fay, Vice President
Nuclear Power Department
Wisconsin Electric Power Company
231 W. Michigan Street, Room 308
Milwaukee, Wisconsin 53201

Dear Mr. Fay:

SUBJECT: RESPONSE TO NRC BULLETIN 88-04 (TAC NOS. 69956 AND 69957)

On May 5, 1988, the NRC staff issued NRC Bulletin 88-04, "Potential Safety-Related Pump Loss." The bulletin requested the evaluation of all safety-related pumps for 1) pump-to-pump interaction during mini-flow operation that could result in dead-heading of one or more of the pumps, and 2) the adequacy of the minimum flow bypass lines with respect to damage resulting from operation and testing in the minimum flow mode. The bulletin also requested that within 60 days of receipt of the bulletin, licensees provide a written response that (a) summarizes the problems and the systems affected, (b) identifies the short-term and long-term modifications to plant operating procedures or hardware that have been or are being implemented to ensure safe plant operations, (c) identifies an appropriate schedule for long-term resolution of this and/or other significant problems that are identified as a result of this bulletin, and (d) provides justification for continued operation particularly with regard to General Design Criterion 35 of Appendix A to Title 10 of the Code of Federal Regulations (10 CFR Part 50), "Emergency Core Cooling" and 10 CFR 50.46, "Acceptance Criteria for Emergency Core Cooling Systems for Light Water Nuclear Power Reactors." Additionally, the staff requested that within 30 days of completion of the long-term resolution actions, licensees provide a written response describing the actions taken.

By letter dated June 28, 1988, you responded to Bulletin 88-04. Your response provided the information requested in a, b, c, and d above. No additional information is required at this time. The staff notes

2.15 MODIFICATION ENGINEER - Review Routing PER 10CFR50.59

NRC Approval Required: ☐ No ☐ Yes (Contact NE)

2.16 REVIEWS AND APPROVALS

			Approved	Disapproved
NO ☐ NPERS Review by		Date	☐	☐
YES ☐ NSEAS Review by	[illegible]	Date 10/24/89	☒	☐
YES ☐ Manager's Supervisory Staff Review MSSM No. 90-13 by [illegible] (for MSS)		Date 07/10/90	☒	☐
NO ☐ Other Reviews (specify)				
by		Date	☐	☐
by		Date	☐	☐
by		Date	☐	☐
by		Date	☐	☐

2.17 MANAGER - PBNP Approval

☒ Reviewed & Priority Satisfactory ☐ Reviewed & Changed Priority to _____

Responsibilities:

Final Design: NSEAS

Installation: M&C

Acceptance: OPS

Final Design Review (Manager - PBNP) to designate in Block 2.21; as a minimum should include groups responsible for operability and maintainability)

Scope of Training: ☒ Concur ☐ Change (Specify) _____

Modification Request ☒ Approved ☐ Disapproved [illegible]

Date 07/10/90

2.18 DISTRIBUTION

Completed by MLB Date 7/17/90

2.19 RESPONSIBLE ENGINEER - Review

Establish schedule for completion of modification and related requirements. Identify design packages associated with this modification.

Modification Affects the Simulator: ☒ Yes ☐ No

Responsible Engineer Julie Pederson POSSIBLY Date 3-27-91

that the necessary modifications are scheduled to be completed during the Point Beach Units 1 and 2 refueling outages in 1991. The staff awaits your description of the long-term resolution actions, which is due within 30 days of completion of those actions.

Sincerely,

Warren H. Swenson

Warren H. Swenson, Project Manager
Project Directorate III-3
Division of Reactor Projects - III,
IV, V and Special Projects
Office of Nuclear Reactor Regulation

cc: See next page

BW IP International Inc

Byron Jackson Products

United Centrifugal Pumps

Pump Division

DOCUMENT RETENTION

LIFETIME _____ YRS

NON-PERMANENT _____ YRS

FILE NO A 16.1

7 August 1989

Wisconsin Electric Power Company
P.O. Box 2046
Milwaukee, Wisconsin 53201

Attention: Mr. R. A. Newton
General Superintendent - NSEAS

Attention: Mr. J. P. Austin

Subject: Wisconsin Electric P.O. No. 139764
Byron Jackson Job No. 891-C-2264.21
Minimum Flow Analysis

Gentlemen:

Thank you for your continued interest in Byron Jackson pumps. We are pleased to present the following report. This report concerns information regarding minimum flow rates for auxiliary feed water pumps at the Point Beach Nuclear Plant. This data was analyzed in accordance with minimum flow requirements as outlined in NRC bulletin 88-04.

In reviewing the files, it was noted that there are four (4) auxiliary feed pumps at the Point Beach Nuclear Station. While these pumps are identical in model number, they are slightly different. S/N 691-S-1028 and 1029 are designed for 400 GPM at 2754 feet. S/N 691-S-1030 & 1031 are also designed for 2754 feet of TDH but at 200 GPM. Both pumps used the same 1st stage hydraulics, but with a different series configuration.

The following guide-lines should be followed in order to avoid damage due to operation at reduced flow rate:

S/N 691-S-1028/29:

Accumulated Time (Hrs/Year)	Min. Flow (GPM)	% B.E.P.
1500	210	42
60-1500	130	26
60	100	20

RECEIVED
NUCLEAR ENGINEERING AUG - 9 1989

S/N 691-S-1030/31:

Accumulated Time (Hrs/Year)	Min. Flow (GPM)	% B.E.P.
1500	105	28
60-1500	75	20
60	70	19

Operation at 30 GPM should be avoided for both pumps.

This concludes the work requisition on purchase order 139764. We trust that this information is satisfactory. If you require additional information, please do not hesitate to contact me.

Very truly yours,

BW/IP INTERNATIONAL, INC.
PUMP DIVISION

W. Fred Grondhuis
Senior Sales Engineer

WFG/ss:WIEPCO7.ltr

CC: BW/IP International
Ms. Ruth Ellen Hawks - LAO

POINT BEACH NUCLEAR PLANT MODIFICATION REQUEST	MR NUMBER 88-099	Page 1 of 4

2.11 ENGINEERING EVALUATION/CONCEPTUAL DESIGN:

See attached.

PERFORMED BY [illegible] DATE 2-5-90

APPROVED BY [illegible] DATE 2-6-90

Form QP 3-1.4
Revision 2

ENGINEERING EVALUATION

NRC Bulletin 88-04, "Potential Safety-Related Pump Loss" identified two possible miniflow design concerns. The first concern involves the potential for the dead-heading of one or more pumps in safety-related systems that have a miniflow line common to two or more pumps or other piping configurations that do not preclude pump-to-pump interaction during miniflow operation. The second concern was whether or not the installed miniflow capacity is adequate to protect against a condition that has been described as hydraulic instability or impeller recirculation which occurs when pumps are operated at some point below the best efficiency point on their characteristic curves. These unsteady flow phenomena increase as the flow decreases below the best efficiency point. Pump damage results from pump vibration, excessive forces on the impeller, and cavitation.

On June 28, 1988 (Ref. VPNPD-88-335, NRC-88-062) we responded to NRC Bulletin 88-04. Our response, as it applies to the Auxiliary Feedwater pumps (AFW), was that the parallel pump operation concern did not exist but that our mini-recirc lines are not adequately sized for inservice testing. Our response stated that the Auxiliary Feedwater system would be modified to provide the capability to perform the required inservice testing at flows equal to, or greater than, the minimum flows now recommended by the pump manufacturers. These new flows are 70 gpm for the motor driven pumps and 100 gpm for the steam driven pumps. (Manufacturer's Letter Attached to Mod.)

The NRC responded to our resolution of this issue in a letter dated May 26, 1989. (Letter attached)

Modification Request 88-099 was initiated to fulfill our commitment to the NRC to modify the recirc lines.

Conceptual Design

The Auxiliary Feedwater pumps mini-recirc lines are currently designed to provide 30 gpm of recirc flow to the condensate storage tanks (CST's). Each mini-recirc line has an air-operated isolation valve and flow orifice upstream of the common return line. The 2" mini-recirc lines are adequately sized for increasing the flow from 30 gpm to 70 or 100 gpm. The valve trim and flow orifice will be replaced with one that will accomodate increased flow. The setpoints for FT4007 and FT4014 will be adjusted to correct for the new flows. The increase in flow through the mini-recirc lines will not affect the operators ability to control flow. The pump discharge head curves are relatively flat so that when the mini-recirc valve opens the flow to the steam generators will not change significantly. A calculation will be provided in the final design to show this.

It is also recommended that the common return line for the AFW pump mini-recirc lines be instrumented with a flow indicator. Flow indication will provide assurance that the pumps are operated with sufficient flow on mini-recirc.

COST ESTIMATE

Option #1:	Mat'l Cost (ea.)	Labor (Man-Hours)	Total Mat'l Cost	Labor $35/hr *1.3 nuclear factor
4 Valve trim	$2000	5	8000	910
4 Flow orifice	$500	8	2000	1456
Engineering Costs (3 Man-Months)				12000
			10000	14366

GRAND TOTAL: $24366

Option #2:
(Option #1 with flow indication)

Flow indication:				
2 flanges	335	3.1	670	282
Orifice plate	595	2.4	595	110
Electrical	300	12	300	546
Transmitter	1000	6.9	1000	314
Processing Piping	451	11.3	451	514
Engineering Costs (1 Man-Week)				1000
			3016	2766
			10000	14366
			+ 3016	+ 2766
			13016	16132

GRAND TOTAL: $29148

POINT BEACH NUCLEAR PLANT MODIFICATION REQUEST	MR NUMBER 88-099	Page 2 of 4

2.11 ENGINEERING EVALUATION REVIEW SHEET

	OPTION 1	OPTION 2
a. Applicable codes and addenda.	B31.1	B31.1
b. Cost estimate.	~~12366~~ JAP 24366	~~17148~~ JAP 29148
c. Availability of parts or equipment.	P.O. Required	P.O. Required
d. Improvement in plant reliability or efficiency.	Yes, will allow pump testing at Mfg. recommended flow rates	
e. Improvement in system or component function or maintainability.	No	No
f. Expected reduction or increase in personnel radiation exposure as a result of the modification (ALARA).	None	None
g. Personnel radiation exposure expected to be incurred in performing the modification.	None	None
h. Regulation or code which would make modification mandatory.	NRC Bulletin 88-04	NRC Bulletin 88-04
i. FSAR or Technical Specification change required should modification be implemented.	No	No
j. Environmental effects.	None	None
k. Specific scheduling problems; i.e., weather, lake conditions, plant conditions.	Outage Required	Outage Required
l. Deleterious affects or modification on plant systems and/or components.	None	None
m. Deleterious affects of modification on plant during implementation of modification.	No	No
n. Security aspects of modification during and following completion of modification.	None	None
o. Increased fire hazard or potential affects Appendix R safe shutdown equipment fire protection program.	None	None
p. Insurance carrier modification.	No	No
q. Seismic analysis.	No	No
r. Environmental qualification.	No	No
s. Missile protection.	No	No
t. Solid state vulnerability to RFI.	No	No
u. Potential plant flooding effects.	No	No
v. Future personnel requirements to support resulting configuration.	None	None
w. Effects on masonry walls.	None	None

NUCLEAR POWER DEPARTMENT
DOCUMENT REVIEW
CONTINUATION

Sheet ____ of ____

1 Document Title/Number/Revision/Date

MR 88-099

BLOCK 4 TO BE COMPLETED BY REVIEWING ORGANIZATION

4 Comments:

I recommend Option 2, to include recirc FIs. This will ~~no~~ allow us to do pump testing on recirc. We will need to do full flow CV tests but the duration of pump runs can be reduced because pump performance data need not be taken. LBS 2-12-90

Option #2 preferred as it provides positive mini-recirc flow indication for analysis of pump performance and trending purpose. LJK 2-13-90

I agree with option #2 for same reasons as stated above.

T.G. 2/13/90

[illegible] 2/13/90

Conceptual design contains FT 4007 & FT 4014, but also needs to include 1&2 FT 4002.

NLH 2/14/90

Can recirc flow increase be achieved by replacing orifice or valve trim, rather than both?

NLH 2/14/90

New flow instrumentation should of one of the same vendor types as presently used in plant.

NLH 2/15/90

7 Resolution:

Will be Included in final design

Copes Vulcan said it is possible, but that cavitation is likely. They are reviewing options/wear out times.

I&C will be contacted prior to instrument purchase.

Form QP 5-3.2
Rev. 1

POINT BEACH NUCLEAR PLANT MODIFICATION REQUEST	MR NUMBER 98-099 *C	Page 4 of 5

2.18

FINAL DESIGN

SCOPE: INSTALL A LARGER SIZE MINI-RECIRC LINE FOR 2P29.

88-099 *A COVERED 1P29 MINI-RECIRC REPLACEMENT.
88-099 *B COVERED P38A&B MINI-RECIRC REPLACEMENT.
88-099 *D MOVED CONDUIT SUPPORTS

FINAL DESIGN DESCRIPTION:

2P29 RECIRC LINE REPLACEMENT PER ATTACHED FINAL DESIGN DESCRIPTION, DESIGN INPUTS, SKETCHES, ECRs, AND SUPPORTING DOCUMENTATION.

Final design by _____ Date 9/25/91

Design verification by _____ Date 10/1/91
(reference QP 3-2)

2.19

FINAL DESIGN REVIEW

	SIGNATURE	DATE	COMMENTS	
☒ MTN		10/2/91	☒ None	☐ Attached
☒ OPS		10/2/91	☒ None	☐ Attached
☒ I&C		10-2-91	☒ None	☐ Attached
☐ MSE			☐ None	☐ Attached
☐ EIE			☐ None	☐ Attached
☐ NES			☐ None	☐ Attached
☐ Other			☐ None	☐ Attached
☐ Other			☐ None	☐ Attached

2.20

☒ QA ☐ Non-QA; Champs code: 04

BASIS:

☐ Quality Engineer _____ 10/2/91

FINAL DESIGN APPROVAL _____ Date 10/04/91

Form QP 3-3
Revision 5

POINT BEACH NUCLEAR PLANT MODIFICATION REQUEST	MR NUMBER 88-099*C	Page 5 of 5

2.21

MODIFICATION ENGINEER: Review/Update

Manager's Supervisory Staff Review ☐ Yes ☐ No

50.59 Review Required ☐ Yes ☐ No

Approved ✓ Disapproved _____

SER No. 91-005-04 MSSM No. 91-16

NRC Approval Required ☐ Yes ☐ No

2.22

RESPONSIBLE ENGINEER

Attach approved IWP:

Signature: [signature] Date 10/4/91

2.22.10

MODIFICATION ENGINEER

Approve mod package and IWP:

Signature: [signature] Date 10/4/91

2.23

GENERAL SUPERINTENDENT - MAINTENANCE

Installation Release

Final design, 10CFR50.59, and IWP are approved and adequate.

Signature: [signature] Date 10-4-91

2.27

MODIFICATION CLOSEOUT:

MR complete including completion of the installation work plan and the closeout checklist.

Responsible Engineer: [signature] Date 2/3/92

Modification Engineer: [signature] Date 2/3/92

2.28

QUALITY ASSURANCE REVIEW:

☐ N/A ☒ Acceptance by [signature] Date [illegible]

2.34

SUPERVISOR - STAFF SERVICES

Completion:

Documentation updates submitted and records complete

Signature [signature] Date 2/14/92

Form OP 3-1 3
Revision 5

Design Inputs

Original Design Code: B31.1-1967
P&ID: M-217
Piping Isometrics: Bechtel P-103,-117,-118
Elementary Wiring Diag.: West. 499B466 sh. 816
Piping Specifications: DB-3, JG-4
Final Designs for MRs 88-099*A, 88-099*B

Increasing the size of the mini-recirc will tend to cause the pump to operate further out on the pump curve for a short period of time. This is similar to what would happen if the S/Gs would depressurize while the turbine driven pumps were supplying AFW, but is much more likely. After a pump start, within 30 seconds, AF-4002 would get a signal to close (once flow in the discharge header reaches 145 gpm). The TDR, however, would keep the valve open for another three minutes. The pump which is now fully up to speed, has three wide open discharge paths. This tends to move the operating point further out on the pump curve, towards pump runout. This point is no greater than 520 gpm (max. flow thru the 3 paths), and most likely somewhat less than that, say 500 gpm (Calc. N-91-032 estimates 450 gpm). According to Byron Jackson, this point is still well within the capability of the pump. The primary concern, however, is that sufficient NPSH needs to be maintained at this point. From the pump curve, NPSH required at 500 gpm is 20 feet of head (as compared to 15 feet at 400 gpm). The minimum NPSH available is approximately 22.5 feet, based on 4.5 feet of water in the CST (EOP foldout page criterion to switch to alternate supply of AFW if level is less than 4.5 ft.). This provides adequate assurance that NPSH requirements will be met for the most likely scenarios.

Calculation N-91-032 estimated the effect the increased size of the recirc line would have on the flow rates to the steam generators if 2AF-4002 stuck open. The calculation show that the pump will deliver 162 gpm per steam generator if this failure occurs with a steam generator pressure of 1100 psig. The 100 gpm per steam generator required in the FSAR accident analyses is still available. In addition the manual valve AF-53 can be used to isolate the recirc line or air to the control valve can isolated. 2AF-4002 has position indication in the control room so that this failure can be identified. 2AF-4002 was recently added to the ASME Section XI test program and is verified to open and close on IT-09.

The size of the recirc piping from the branch off point on the discharge header to the common recirc header was increased from 1-1/2" to 2". Appropriate sizing of the AFW recirc line was verified by Calculation N-91-031.

Final Design Description MR 88-099*C

This modification will increase the capacity of the mini-recirc line for the Auxiliary Feedwater Pump 2P29. This was initiated in response to NRC Bulletin 88-04 with refinements added by NRC Generic Letter 89-04. Additionally, flow measurement instrumentation will be added to this line in order to meet the requirements of ASME Section XI testing.

The capacity of the recirc line is being increased from the present 30 gpm to approximately 125 gpm. The original recirc line capacity was established solely on the basis of pumped fluid temperature rise. In order to protect the pumps from the effects of hydraulic instability at low flow rates, the capacity of the recirc line will be increased per the recommendations of the manufacturer, Byron Jackson Products, to a minimum 100 gpm (see attached correspondence from Byron Jackson Pump).

The modification for 2P29 will be completed during the 1991 Unit 2 refueling outage. The isolation for this work will result in the mini-recirc lines for pumps P38A, P38B, and 1P29 being out of service in addition to the 2P29 recirc line. The pumps themselves (P38A, P38B, and 1P29) will not be out of service since discharge paths to the steam generators will be lined up to compensate for the isolation of the recirc lines. Administrative controls will be established to minimize the potential for damage to P38A, P38B, and 1P29 pumps during the time that the tie-in to the common recirc discharge line is installed for 2P29 (see attached temporary information tags. Installation will be completed so as to minimize the time that the recirc lines for the P38A, P38B, and 1P29 are out of service.

Basic System Operation

The mini-recirc AOV (2AF-4002) is interlocked with the steam supply MOVs, and will open when the MOVs open. A dPIS is set to close 2AF-4002 when flow in the discharge header is greater than required recirc flow (presently set at 75 gpm, increasing), and is set to open 2AF-4002 again when flow approaches required recirc rates (presently set at 30 gpm, decreasing). This control circuit has a three minute time delay relay (TDR) which is activated whenever a signal is generated to close the valve. This TDR apparently serves a dual purpose; one, to keep the system from 'hunting' for it's operating point and two, to remove pump heat during coastdown after pump has been shutdown. The discharge pressure is not directly controlled, only the speed of the turbine drive via the Woodward governor.

Design Inputs (cont.)

Copes Vulcan was contacted about the possibility of reusing the existing control valves with a different trim package to accommodate the new flow rates. They however recommended that a new, larger control valve be used with a downstream restricting orifice. (See Copes-Vulcan telecopy attached.) A new control valve, therefore was purchased from Marble Hill and has been refurbished by plant maintenance (MWR 91-1143). This refurbishment included replacing the diaphragm and packing, touching up the painted surfaces on the valve operator, and a general cleaning and visual inspection. The refurbishment was necessary since the valve had been in long term storage. Additionally, a gag handwheel and a smaller actuator spring were added to the new control valve (MWR 91-3605). The handwheel was needed to allow valve operation in the event of an instrument air failure. This handwheel will be painted orange per Appendix R requirements. The original spring in the actuator was designed for RCS pressure and was therefore resized for our Aux. Feed. system, to make the handwheel easier to operate (see QA concerns for these springs on last page of Design Inputs).

The new recirc line was seismically analyzed by Sargent & Lundy (Accession #100070). The piping was analyzed to meet the requirements of ASME Section III, Subsection NC of the B&PV Code 1977 issue through winter 1978 addenda. An Impell study reconciles this code to the original construction code B31.1-1967. Four new supports will be added to the 2P29 mini-recirc line (see attached sketches). One existing restraint and one hanger will be removed and one support will be relocated.

The piping and valves up to and including the control valve, 2AF-4002, is QA Scope. All of the material used for the new piping supports will also be QA Scope, due to seismic concerns. The transmitter support does not need to be seismic since the transmitter is non-QA and it is not located above any safety related equipment.

Beyond the QA boundary a stainless steel plate orifice and flange will be installed for flow measurement. Local indication will be provided by a Rosemount differential pressure transmitter, model no.1151DP5S22B1M5, with an integral LCD meter. The transmitter will be wall mounted and power will be supplied from a nearby receptacle circuit, which is powered from Panel 7L25. The additional load on this circuit will be insignificant. Cable and raceway schedules have been generated and will be attached to the IWP. The DC power supply will be installed in an enclosure mounted near the transmitter. A valve manifold, isolation valves, and tees will be provided for testing and calibration of the transmitter. The transmitter will be installed below the pipeline with its sensing lines sloped

up to the flange connections at the piping centerline so that any air in the lines vents to the piping.

Design Inputs (cont.)

The original piping specifications called for CS pipe throughout the recirc systems. However, mini-recirc systems are very susceptible to cavitation, and therefore all of the piping and valves for the new recirc lines will be SS.

New setpoints for 2dPIS-4002 will be set at 145 gpm-valve closed with increasing pressure and 110 gpm-valve open with decreasing pressure. These changes will allow the recirc line to perform its pump protection function.

The pressure class boundary for this recirc line is the manual isolation valve, 2AF-53. The downstream piping (JG-4) will be hydro'd at 1.5 times design pressure (see attached hydro sheet). The piping between the check valve, 2AF-114, and 2AF-53 (Class DB-3) will also be hydro'd at 1.5 times its design pressure (see attached hydro sheet). The short section of piping between the check valve and the 4" discharge header, cannot be effectively isolated from the pump suction piping (tie-in point is upstream of discharge isolation valve), and therefore cannot not be hydro'd at 1.5 times design pressure. In lieu of the hydro, NDE and an inservice leak test will be performed on the applicable welds. The NDE will consist of LP exams on the welds not previously hydro'd. As noted in memo NPM 91-0704, radiography of the open butt weld on the discharge header is not required (AFW discharge piping welds were radiographed 100% during original construction).

Additional testing will include stroke testing the new AOV including proper operation of limit switches, insuring discharge MOVs and AOVs for the other AFPs are correctly reset (they will be adjusted when the recirc header is isolated for the 2P29 work), and taking a flow reading on the new FE to ensure proper operation of the recirc line. All testing will be controlled by the IWP.

The original layout specified by S&L for the 2P29 recirc routing, could not be used due to interferences in the field. An alternate route was proposed, and is being evaluated by S&L (see attached copy of fax sent to S&L). S&L's initial review of this proposal showed low stresses in affected areas, and therefore they gave verbal confirmation to proceed with the installation as proposed (via telecon with George Tokarski, 9/30/91). As-built information and dimensions will be fed back to S&L for final resolution.

Design Inputs (cont.)

The following ECRs were generated for the 3 previous AFP mini-recirc replacements, and are applicable to this design also.

NE-91-227 Flow Orifice Plate Material Discrepancies
NE-91-233 Bill of Mat'l, Typos
NE-91-246 4"x2" SS Sockolet (PO 185036)
NOTE: Additional contact with this vendor confirmed that the curvature of the butt weld end was the only difference between the 4x2 fitting and a 3x2 fitting, and that this curvature could be altered by the installer to fit on a 3" header without compromising the integrity of the fitting. The 3"x2" fitting will be used for the connection to the recirc header.
NE-91-249 & 253 H-Frame Support on New AOV
PB-91-055 Transmitter Support Stand Drawing Revisions
PB-91-057 Electrical Drawing Revisions

The replacement springs for the new AOV actuators were ordered non-QA. Their function, however, requires that they actually be QA. Single failure criteria was used in evaluating the possibility of the recirc AOVs failing open, which would rob flow from the S/Gs. Since the springs provide the motive force to shut the valve, they need to be QA. SQA is in the process of performing a commercial grade dedication in order to qualify the springs that were obtained.

Due to interferences in the overhead above the AFP tunnel, a non-standard pipe fitting will be used. This fitting is essentially a plug that will be welded into a socket fitting (see SK-AFW-017/88-099). The plug will be made out of 2" round SS rod, and will be machined to fit in a 1 1/2" socket weld fitting. Interferences from other pipies immediately below the existing AFW recirc header, make it very difficult to perform butt or socket welds, which require clear access to the bottom of the joint. Seal welding this plug into the socket will allow direct access to the entire weld joint. The recirc header has a design pressure of only 50 psig. Nominal pipe thickness of this header is less than 1/4". This plug will have a thickness of 5/8", and the seal weld will be visually inspected and hydro tested. Engineering judgement would indicate that this plug is acceptable for use in this piping system.

NUCLEAR POWER DEPARTMENT
10 CFR 50.59 REPORT

Reference Document(s) # MR 88-099*C

Title of Proposed Modification,
Procedure Change, Test or Experiment Increased Auxiliary Feedwater Pump Mini-Recirc Line Flow Capacity

Prepared by _____ Date 9/25/91

Reviewed by _____ Date 9/25/91

MSS Review/Date _____ MSS # 10/3/91 91-4

Manager - PBNP Approval _____ Date 10/3/91

In lieu of MSS and Manager signature, attached PBF-0026d if serial review has been conducted. (MSS and manager approval are not necessary for a determination of non-applicability.).

Section 1
Screening - Determination if Safety Evaluation is Required

A. Describe the modification, procedure change, test, or experiment and its expected effects. Include interim configurations or conditions.

Modification 88-099 replaces the existing mini-recirc lines of the auxiliary feedwater (AFW) pumps with new larger capacity mini-recirc lines. The flow rate is increased to protect the pump from the adverse effects of hydraulic instability at low flow rates. The modification also adds recirc flow measurement instrumentation to provide local flow indication for inservice testing of the AFW pumps. MR 88-099 was initiated in response to NRC Bulletin 88-04 with refinements added by NRC Generic Letter 89-04. MR 88-099 is divided up into 4 parts. MR 88-099*A controls the installation for the Unit 1 steam-driven AFW pump (1P29), MR 88-099*B controls the installation for the two electric motor-driven AFW pumps (P38A & P38B), MR 88-099*C controls the installation for the Unit 2 steam-driven AFW pump (2P29) and MR 88-099*D controls the installation of conduit supports for P38A and P38B.

B. Does the change, test or experiment involve a change in the Technical Specification? ___ Yes _X_ No
If a change is required, briefly describe what the change should be and why it is required.
NOTE: NRC approval is required prior to implementation.

C. 1. Will any system, structure or component (SSC) described in the PBNP FSAR, including its figures be altered? (Refer to step 2.1.2 for exception. This question may be answered "no" although the SSC is described in the PBNP FSAR.) _X_ Yes ___ No

2. Could, within reasonable possibility, the proposed change affect the intended design, operation, function or method of function, of an SSC important to safety which is described in the PBNP FSAR? (This includes interim conditions.) _X_ Yes ___ No

3. Will any procedure described in the PBNP FSAR be altered? ___ Yes _X_ No

4. Will a test or experiment be performed which is not described in the PBNP FSAR and affects the design, operation, function or method of function, of an SSC important to safety which is described in the PBNP FSAR? ___ Yes _X_ No

NUCLEAR POWER DEPARTMENT
10 CFR 50.59 REPORT

Section 1 - Continuation

5. Will implementation affect a prior documented technical commitment to the NRC pertaining to the design, operation, function or method of function, of an SSC important to safety which is described in the PBNP FSAR? ___ Yes _X_ No

6. Is an evaluation required (are any of the above questions answered yes)? _X_ Yes ___ No

NOTE: If no, then provide basis for decision in Part D.
If yes, complete Sections 2 and 3.

D. Basis for determination that a safety evaluation is not required.

NUCLEAR POWER DEPARTMENT
10 CFR 50.59 REPORT

Section 2
Determination if an Unreviewed Safety Question is Involved

A. List the licensing basis documents and sections where the system, structure, component, procedure, test, or experiment is described.

FSAR Sections 10.1, 10.2.2, 10.3, 10.4, 14.1.9, 14.1.10, 14.1.11, 14.2.4
Tech Specs 15.3.4.C, 15.4.8
NRC SERs dated 1/27/81, 4/21/82, 9/16/86

B. 1. Does the proposed activity increase the probability of occurrence of an accident previously evaluated in the PBNP FSAR? ___ Yes _X_ No

The accidents "Loss of External Electrical Load" (FSAR 14.1.9), "Loss of Normal Feedwater" (FSAR 14.1.10), "Loss of All AC Power to the Auxiliaries" (FSAR 14.1.11) and "Steam Generator Tube Rupture" (FSAR 14.2.4) are the accidents in the FSAR that involve the AFW system. In each case the AFW system is used to mitigate the consequences of the accident and is not a factor in the occurrence.

2. Does the proposed activity increase the consequences of an accident previously evaluated in the PBNP FSAR? ___ Yes _X_ No

Of the 4 accidents analyzed for in the PBNP FSAR the worst case accident involving the AFW system is the "Loss of Normal Feed Water". The accident analysis assumes an AFW flow of 100 gpm to the affected steam generators and concludes that during the accident there will be enough water inventory in the steam generators to provide cooling to the reactor coolant system. Calculation N-91-032 analyzes the impact of an AFW pump mini-recirc valve (2AF-4002) sticking open. The calculation shows that the pump will still deliver 162 gpm vice the 200 gpm nominal flow to each of the Unit 2 steam generators. If we apply single failure criteria to the safety related components of the AFW system, and the single failure is 2AF-4002 sticking open, the 1 steam driven AFW pump at 400 gpm, the other steam driven pump at 324 gpm and two electric motor-driven AFW pumps at 200 gpm each, provide adequate flow to the steam generators for decay heat removal.

3. Does the proposed activity increase the probability of occurrence of a malfunction of equipment important to safety previously evaluated in the PBNP FSAR? ___ Yes _X_ No

The purpose of the new recirc line is to ensure the flow through the AFW pump will always be greater than the minimum required to prevent pump damage due to low flow operation. The minimum flow requirement provided by the manufacturer is 100 gpm. The controls for 2AF-4002 will be set to maintain a pump flow of at least 110 gpm. Thus the increased recirc flow will reduce the possibility of AFW pump damage during the loss of normal feedwater accident.

NUCLEAR POWER DEPARTMENT
10 CFR 50.59 REPORT

Section 2 - Continuation

4. Does the proposed activity increase the consequences of a malfunction of equipment important to safety previously evaluated in the PBNP FSAR? ___ Yes _X_ No

The most limiting malfunction for the safety related components in the AFW system is the failure of one of the steam-driven AFW pumps. This is analyzed for in the worst case accident of Loss of Normal Feedwater. The increase in the size of the mini-recirc line does not increase the consequences of this malfunction. If our single failure is the loss of the AFW pump, then 2AF-4002 is assumed to function properly and the mini-recirc line will be isolated during the accident.

5. Does the proposed activity create the possibility of an accident of a different type than any previously evaluated in the PBNP FSAR? ___ Yes _X_ No

The new recirc lines have the same basic design configuration as the existing recirc lines. The possibility of a new accident is not created.

6. Does the proposed activity create the possibility of a malfunction of equipment important to safety of a different type than any previously evaluated in the PBNP FSAR? ___ Yes _X_ No

Calculation N-91-032 analyzes the impact of 2AF-4002 sticking open. The calculation shows that the pump will still deliver 162 gpm vice the 200 gpm nominal flow to each of the Unit 2 steam generators. If we apply single failure criteria to the safety related components of the AFW system and the single failure is 2AF-4002 sticking open, the 1 steam-driven AFW pump at 400 gpm, the other steam-driven AFW pump at 324 gpm and the two electric motor-driven AFW pumps at 200 gpm each provide adequate flow to the steam generators for decay heat removal. The new malfunction is within the scope of the analysis for the Normal Loss of Feedwater accident. 2AF-4002 is included in the ASME Section XI test program and is verified to operate properly by IT-295

7. Does the proposed activity reduce the margin of safety defined in the Basis for any Technical Specification? ___ Yes _X_ No

With a unit shutdowm, TS 15.3.4.C allows for a steam-driven AFW pump to be taken out of service for maintenance or testing for an indefinite period of time. The installation of the recirc lines will be in two phases The first phase isolates the mini-recirc lines of the 4 AFW pumps. During this phase no pumps will be considered inoperable because pump minimum flow requirements are ensured through discharge paths to the steam generators. During the second phase 2P29 steam-driven AFW pump will be taken out of service. 2P29 is expected to be out of service for 4 days for the installation of its mini-recirc line. With Unit 1 operating, Unit 2 shutdown and the other three AFW pumps inservice and operable to provide the required AFW flow for the operating unit, there is no reduction in the margin of safety during the installation of this modification. After the completion of this modification the AFW system will perform its intended safety function exactly as before.

DOES THE CHANGE, TEST OR EXPERIMENT INVOLVE AN UNREVIEWED SAFETY QUESTION? (IS THE ANSWER TO ANY OF THE ABOVE QUESTIONS YES?) ___ Yes _X_ No

---

NUCLEAR POWER DEPARTMENT
10 CFR 50.59 REPORT

Section 3
Evaluation Summary

Modification 88-099 replaces the existing mini-recirc lines of the auxiliary feedwater (AFW) pumps with new larger capacity mini-recirc lines. The flow rate is increased to protect the pump from the adverse effects of hydraulic instability at low flow rates. The modification also adds recirc flow measurement instrumentation to provide local flow indication for inservice testing of the AFW pumps. MR 88-099 was initiated in response to NRC Bulletin 88-04 with refinements added by NRC Generic Letter 89-04. MR 88-099 is divided up into 4 parts. MR 88-099*A controls the installation for the Unit 1 steam-driven AFW pump (1P29), MR 88-099*B controls the installation for the two electric motor-driven AFW pumps (P38A & P38B), MR 88-099*C controls the installation for the Unit 2 steam-driven AFW pump (2P29) and MR 88-099*D controls the installation of conduit supports for P38A and P38B. This 10 CFR 50.59 safety evaluation is for MR 88-099*C only. MRs 88-099*A, B, D are covered by other safety evaluations.

The capacity of the mini-recirc lines for 2P29 will be increased from 30 gpm to a minimum of 100 gpm based on the recommendation of the manufacturer, Byron Jackson Products. The increased flow through the mini-recirc line is to protect the pumps from the adverse effects of hydraulic instability at low flow rates. Calculation N-91-032 analyzes the impact of the increased mini-recirc flow if 2AF-4002 sticks open. The calculation shows that the pump will still deliver 162 gpm vice the 200 gpm nominal flow to each of the Unit 2 steam generators. If we apply single failure criteria to the safety related components of the AFW system and the single failure is 2AF-4002 sticking open, the 1P29 at 400 gpm, P38A and P38B at 200 gpm each and 2P29 at 324 gpm provide adequate flow to the steam generators for decay heat removal. The new malfunction is within the scope of the analysis for the Normal Loss of Feedwater accident. This single failure will also cause the pump's operating point to move further out on the pump curve, closer to pump runout conditions. (This point is estimated to be approximately 450 to 500 gpm.) Byron-Jackson has stated that this operating point is still well within the capabilities of the pump. The primary concern in this condition, however, is to ensure NPSH requirements are met. This was checked and the NPSH required for 500 gpm is still less than the NPSH available at minimum CST level (4.5 ft). 2AF-4002 is included in the ASME Section XI test program and is verified to operate properly by IT-295.

This modification will be completed with Unit 1 at power and Unit 2 shutdown. With its associated unit shutdowm, TS 15.3.4.C allows for a steam-driven AFW pump to be taken out of service for maintenance or testing for an indefinite period of time. Because this is within the time constraints of the TS there is no reduction in the margin of safety.

The installation of the recirc lines for the steam-driven AFW pump will be in two phases. The first phase isolates the mini-recirc lines for all four AFW pumps. The pumps themselves will not be considered out of service because the minimum flow requirements for the AFW pumps will be maintained, via administrative controls, by keeping discharge paths to the steam generators open. For the U1 steam-driven pump, the discharge MOVs are normally throttled open. For the motor-driven pumps, the normally closed discharge AOVs (AF-4012 and AF-4019) will be throttled open to provide a discharge path to the steam generators. During this first phase, the existing recirc line will be removed and a new section of pipe from the common recirc header to the manual isolation valve will be installed, tested and conditionally accepted. This phase will be completed so as to minimize the time that the recirc lines for the other three pumps are out of service. In the second phase, the remaining portion of the 2P29 recirc line, from manual isolation valve back to the discharge header, will be installed and tested. Prior to placing the AFW pump back in service, the testing required by TS 15.4.8 will be completed. The IWP will ensure that the requirements of the TSs are met.

The AFW system is a Seismic Class 1 system. The mini-recirc piping and supports for the proposed modification have been designed to meet the Class 1 requirements During the installation, the only piping and supports affected are for the portions of the mini-recirc lines being worked at that time. The inservice AFW pumps and their associated suction, discharge and mini-recirc piping are still considered to meet Seismic Class 1 requirements and be operable to perform their intended safety function.

This modification does not involve an unreviewed safety question.

Setpoints for dPIS-4002 will be changed from 75gpm ↑ & 30gpm↓, to 145gpm ↑ & [illegible] to reflect the changes in the mod.

COPES-VULCAN TELECOPY TRANSMISSION

TO: WISCONSIN ELECTRIC
FAX #: 414-221-2010

MESSAGE #: GJB-101690-1
NO. OF PAGES: 1

ATTN: JOHN McNAMARA

DATE: OCTOBER 16, 1990

FROM: GREG J. BEAVER
MAINTENANCE SALES

PHONE: (814) 774-3151
FAX: (814) 774-2646

REF: Contract Reference: 6810-81133
Valve Tags: CV-4007, CV-4014, 1-CV-4002, 2-CV-4002

SUBJ: Valve Trim Change to accommodate a higher flow rate

John,

I must apologize for my lateness. Do to the large volume of inquires and the daily extinguishing of fires, I was unable to provide a quick response. I will positively attempt to provide you with additional information in a more timely manner in the future.

I have reviewed your request for additional total flow of 70 gpm for valves CV-4007 and CV-4014, and 100 gpm for 1 & 2-CV-4002. You had requested a ne trim design so that your flow restricting orifice could be removed.

With the flow orifice removed, conditions exist were flow velocities are high for the existing 1" valves. Also, the conditions designate that a cavitation condition will exist if the orifice is removed. But, do to the limited service use of this valve, CV would recommend using a No. 11 Cascad Trim, Screwed Cage Design, which will be manufactured from 420 SST. This trim sells for $ 2021.00 per set and would be manufactured under CV's Commercial Grade QA Program. Delivery of the trim will be 4 - 6 weeks ARO.

For optimum operation, CV would recommend short-stroking the new trim to avoid cavitation, (if the orifice is removed). Personally, I would try thi option because it would be most cost effective and would be a quick, probable fix.

For the longterm and best fix, CV would recommend the installation of a larger valve with a downstream flow orifice for backpressure.

If you have any questions on this or other matters, please do not hesitate to give me a call. Thank you for your patience.

Regards,

Greg J. Beaver
Maintenance Sales Engineer
Customer Service Department

COPES-VULCAN, INC.
White Consolidated Industries
LAKE CITY ERIE CO. PA. U.S.A.
WCI

TELECOPY MESSAGE

PH: (814)774-3151 FAX: (814)774-2646

TO: WEP POINT BEACH

FAX NO. 414 755-2321 EXT. 233

ATTN: TODD MIELKE

DATE: 6/6/91

FROM: JEFF RUFFING

REFERENCE: D-166085 7620-95375-248

SUBJECT: SPRING CONVERSION

PAGE 1 OF 1

MESSAGE:

TODD,

I HAVE DONE SOME SPRING ANALYSIS AND SELECTED A SPRING THAT WILL MEET YOUR NEEDS MORE EFFICIENTLY. THE SPRING WILL COST $387.00 PER SPRING, ALSO REQUIRED ARE THE 4 HEX HEAD CAP SCREWS A PRICE OF $6.36 PER SET (QTY. 4). CV CURRENTLY HAS 3 SPRINGS IN STOCK AND PLENTY OF CAP SCREWS IN STOCK. THE ASSEMBLY DRAWING CAN BE REVISED UNDER THE OLD JOB # 9150-57403 INCLUDING THE HANDWHEEL CONVERSION. PLEASE REPLY ASAP SO WE CAN RESERVE THE SPRINGS FOR YOU. IF YOU HAVE ANY FURTHER QUESTIONS OR IF I CAN BE OF FURTHER ASSISTANCE PLEASE FEEL FREE TO GIVE ME A CALL. THANK YOU FOR YOUR TIME.

REGARDS

Jeff Ruffing

JEFFREY R. RUFFING
MAINTENANCE SALES ENGINEER
CUSTOMER SERVICE DEPARTMENT
COPES-VULCAN, INC.
P.O. Box 577
Lake City PA 16423-0577
Tel 814-774-3151 Ext. 223 Fax 814-774-2646

Modification Request 88-044*B/C
Final Design Description Attachment

Check Valve Sizing:

According to the Rockwell Edwards Tech Manual (EI00526), for trouble free check valve service the pressure drop over the check valve must either be;

1. Greater than the ΔP required for full lift which is 5 psid for this check valve or,

2. Greater than 25% of $\Delta P_{full\ lift}$ (1.25 psid) if good inlet flow conditions exist. Good inlet flow is defined as having 8 to 10 pipe diameters of straight pipe at the valve inlet in the Tech Manual. Note that a recent EPRI study states that 5 pipe diameters is adequate.

The ΔP over the check valve is calculated per the equation given in the Tech Manual:

$$\Delta P = \left[\frac{w}{\beta C_v}\right]^2 \frac{1}{\rho}$$

$$w = 80\,\frac{gal}{min} \times \frac{60\,min}{hr} \times .13368\,\frac{ft^3}{gal} \times 62.4\,\frac{lb}{ft^3}$$

$$w = 40{,}040\ lb/hr$$

$$\Delta P = \left[\frac{40{,}040}{(633)(60)}\right]^2 \frac{1}{62.4} = 1.78\ psid$$

Check Valve Sizing Continued:

Therefore the ΔP over the check valve is approx. 36% of the ΔP required for full lift however as seen on the isometric drawings there is only approx. 6" or 3 pipe diameters of straight pipe before the valve inlet.

These conditions may be slightly below the optimum conditions for check valve wear concerns however the use of this check valve is considered justified in this case since;

- The ΔP across the valve is above the minimum 25% of ΔP full lift.
- There is some straight pipe before the valve inlet.
- The AFW system is a standby system which is not in constant use. It is only placed in service for startups/shutdowns and for testing and therefore wear/fatigue concerns are not that significant.

Modification Request 88-044XB/C
Final Design Description Attachment

Check Valve Sizing Continued:

- Even if the check valve failed, there would not be a safety concern. The check valves prevent flow from being forced backwards thru a non operating pump. This windmilling of the pump would not be a concern due to the pump rotating assembly design using oiling rings.

John A Schroeder
9/4/91

MR 88-099*B

ADDED LOAD JUSTIFICATION FOR BREAKER 7L-25

M.R. 8/29/91
N/A

REFERENCES:

BECHTEL DRAWING E-29 SHEET 27
MASTER DATA BOOK 3.2.9 PANEL 7L REV. 2

PRESENT LOAD: 8 DUPLEX RECEPTACLES

PER SECTION [illegible](C)(5) OF THE 1990 NATIONAL ELECTRICAL CODE, EACH DUPLEX RECEPTACLE IS A 180 VA LOAD.

∴ TOTAL PRESENT LOAD = 8 x 180 VA
= 1440 VA OR 12 AMPS @ 120V.

ADDED LOAD: FOUR ROSEMOUNT TRANSMITTER POWER SUPPLIES

EACH POWER SUPPLY DRAWS ≈3 VA PER VENDOR DATA.

ADDED LOAD = 4 x 3VA = 12VA

∴ TOTAL DESIGNED LOAD = 1440VA + 12VA
= 1452VA OR 12.1 AMPS @ 120V.

CONCLUSION:

SINCE BREAKER 7L-25 IS A 20 AMP BREAKER THE ADDED- 0.1 AMP IS NEGLIGIBLE.

INTERNAL CORRESPONDENCE

NPM 91-0704

TO: D. E. Duenkel

FROM: J. A. Pederson, Responsible Engineer

DATE: May 03, 1991

SUBJECT: RADIOGRAPHY CONCERNS FOR M.R. 88-099*A

COPY TO: File M1.1 (M.R. 88-099A)

Original Bechtel piping NDE requirements for the 2" tie-in to the 4" discharge header would have required 100% RT of the butt welds. However, per the Bechtel letter of March 14, 1991 to T. D. Mielke, the basis for whether or not to do radiography should be "the present day editions of ANSI B31.1."

The ANSI/ASME B31.1-1986 edition states that "for temperatures between 350° F and 750° F inclusive with all pressures over 1025 psig" that the requirement for buttwelds is "RT for over NPS 2 with thickness over 3/4 inch." A visual is required for all sizes and thicknesses. Since the new Aux FW recirc piping is 2" schedule 80 piping (wall thickness = 0.218) tying into 4" schedule 80 piping (wall thickness = 0.337) only a visual inspection is required.

Julie Pederson

dn

Bechtel
777 East Eisenhower Parkway
Ann Arbor, Michigan 48108
Mailing address P.O Box 1000
Ann Arbor, Michigan 48106-1000

March 14, 1991

BLP-91-024

T.D. Mielke
Point Beach Nuclear Plant
Wisconsin Electric Power Company
6610 Nuclear Road
Two Rivers, WI 54241

In reply refer to
Chron 04530

Subject: Point Beach Nuclear Plant
WEPCo Contract 174593
Bechtel Job 10447-050-039
CRITICAL SERVICE PIPING

Dear Mr. Frieling:

This responds to a verbal request for information from your Todd Mielke to Ted vanVick on March 11, 1991. Mr. Mielke inquired as to the basis for Bechtel specifying 100% radiography of butt welds in ANSI B31.1 critical piping in original construction of systems at the Point Beach nuclear station.

In the past, it was Bechtel practice to designate certain non-nuclear systems in a light water-cooled nuclear power plant as "critical". For these systems, the design conditions and service were considered to warrant that their pressure integrity be verified by examination over and above that required by code. This approach was adopted because earlier editions of ANSI B31.1 did not impose adequate NDE requirements to establish the desired confidence in the pressure integrity of some piping systems.

However, the later versions of ANSI B31.1 have incorporated acceptable NDE requirements for those piping systems. Therefore, we have discontinued the earlier approach of classifying piping systems into critical and noncritical categories. We believe that the present-day editions of ANSI B31.1 provide for the desired confidence in the pressure integrity of the piping systems.

If you have any questions, please advise.

Sincerely,

T.W. Vanvick

T.W. Vanvick
Project Engineer

JOA
TWV/JOA/mv
031403

cc: J.O. Abel
G.D. Frieling, Downtown
B.O Sasman, Downtown

Table 136.5.1

Mandatory Minimum
Nondestructive Tests for Welds

	100 Per Cent Radiography	Liquid Penetrant or Magnetic Particle
BUTT WELDS		
Steam Service above 925 F:		
Greater than 1-1/8 in. nominal wall thickness	Yes	Yes*
Equal to or less than 1-1/8 in. nominal wall thickness	No	Yes*
Steam Service 925 F and below	No	No
Water Service — all pressures and temperatures:		
Greater than 1-5/8 in. nominal wall thickness	Yes	No
Equal to or less than 1-5/8 in. nominal wall thickness	No	No
FILLET AND SOCKET WELDS		
Steam Service above 2500 psi or 925 F	No	Yes*
All Other Services	No	No

* For austenitic materials only.

ponent shall be completely radiographed.

(b) Random Radiography. Where random radiography is specified, one or more welds may be completely or partially radiographed. It must be recognized that random radiography will not insure fabricated product of predetermined quality throughout, and is in no way a substitute for 100 per cent radiography. Random radiography is considered to be only a desirable means of spot checking welder performance, particularly in field welding where conditions such as position, ambient temperatures, and cleanliness are not as readily controlled as in shop welding.

(c) Ultrasonic. Where 100 per cent ultrasonic testing is specified, the entire surface of the part being inspected shall be covered using extreme care and careful methods to be sure that a true representation of the actual conditions is obtained.

(d) Liquid Penetrant. Where liquid penetrant examination is specified, the entire surface of the component or weld being examined shall be covered. The examination shall be performed in accordance with the applicable requirements of Appendix VIII, Section VIII of the ASME Boiler and Pressure Vessel Code. The following standards of acceptance shall be met:

All linear discontinuities and aligned penetrant indications revealed by the test shall be removed. Aligned penetrant indications are those in which the average of the center-to-center distances between any one indication and the two adjacent indications in any straight line is less than 3/16 in. All other discontinuities revealed on the surface need not be removed unless the discontinuities are also revealed by radiography, in which case the pertinent radiographic specification shall apply.

(e) Magnetic Particle. Where magnetic particle testing is specified, the entire surface of the component or weld being examined shall be covered. The testing shall be performed in accordance with Appendix VI, Section VIII of the ASME Boiler and Pressure Vessel Code. The following standards of acceptance shall be met:

1. Castings – ASTM E 125 as supplemented by MSS SP-53.

2. Other components and welds – All linear discontinuities and aligned indications revealed by the test shall be removed. Aligned indications are those in which the average of the center-to-center distances between any one indication and the two adjacent indications in any straight line is less than 3/16 in. All other revealed discontinuities need not be removed unless the discontinuities are also revealed by radiography, in which case the pertinent radiographic specification shall apply.

137 LEAK TESTS

137.1 General.

It shall be mandatory that the design, fabrication, and erection of power piping, constructed under this Code demonstrate leak tightness. This requirement shall be met by a hydrostatic leak test prior to initial operation. Where a hydrostatic test is not practicable, an initial service leak test, a vacuum test, or [redacted] system [redacted]

137.1.1 Hydrostatic Leak Test.

When a hydrostatic leak test is conducted it shall conform to the provisions of Pars. 137.2, 137.3, and 137.4, covering test media, test preparation, and test pressure.

137.1.2 Initial Service Leak Test.

(a) An initial service leak test and inspection is acceptable when other types of tests are

TABLE 136.4
MANDATORY MINIMUM NONDESTRUCTIVE EXAMINATIONS FOR PRESSURE WELDS OR WELDS TO PRESSURE RETAINING COMPONENTS

Type Weld	Piping Service Conditions and Nondestructive Examination		
	Temperatures Over 750°F (400°C) and at All Pressures	Temperatures Between 350°F (175°C) and 750°F (400°C) Inclusive With All Pressures Over 1025 psig [(7100 kPa (gage)]	All Others
Buttwelds (girth and longitudinal)	RT for over NPS 2. MT or PT for NPS 2 and less	RT for over NPS 2 with thickness over ¾ in. (19.0 mm). Visual for all sizes with thickness ¾ in. (19.0 mm) or less.	Visual for all sizes and thicknesses
Welded branch connections (size indicated is branch size) [see Note (7)]	RT for over NPS 4. MT or PT for NPS 4 and less	RT for branch over NPS 4 and thickness of branch over ¾ in. (19 0 mm) Visual for all sizes with branch thickness ¾ in (19.0 mm) or less	Visual for all sizes and thicknesses
Fillet, socket, attachment, and seal welds	PT or MT for all sizes and thicknesses	Visual for all sizes and thicknesses	Visual for all sizes and thicknesses

NOTES:
(1) All welds must be given a visual examination in addition to the type of specific nondestructive examination specified.
(2) NPS — nominal pipe size.
(3) RT — radiographic examination; MT — magnetic particle examination; PT — liquid penetrant examination.
(4) RT of branch welds shall be performed before any nonintegral reinforcing material is applied.
(5) The thickness of buttwelds is defined as the thicker of the two abutting ends after end preparation.
(6) Temperatures and pressures shown are design.
(7) In lieu of radiography of welded branch connections when required above, liquid penetrant or magnetic particle examination is acceptable and, when used, shall be performed at the lesser of one-half of the weld thickness or each ½ in. of weld thickness and all accessible final weld surfaces.
(8) For nondestructive examination of the pressure retaining component, refer to the standards listed in Table 126.1 or the manufacturing specifications.
(9) Acceptance standards for NDT performed are as follows: MT — see Para. 136 4.3; PT — see Para. 136.4.4; VT — see Para. 136.4.2; RT — see Para. 136.4.5.
(10) Fillet welds not exceeding ¼ in. (6 mm) throat thickness which are used for the permanent attachment of nonpressure retaining parts are exempt from the PT or MT requirements of the above Table.

Wisconsin Electric
POWER COMPANY

Point Beach Nuclear Plant
6610 Nuclear Rd. Two Rivers, WI 54241

(414) 755-2321

TELECOPY COVER SHEET

MESSAGE SENT TO: GEORGE TIMKSKI
312-269-7430
SARGEANT & LUNDY

FROM: TODD MEICE (EXT 376)
PBNP

DATE: 9/20/91

TOTAL PAGES INCLUDING COVER SHEET: 4

If you have any problems receiving this, please call:

(414) 755-2321

(From PSB, please call 69-0)

Our telecopy number is (414) 755-2321, ext. 233

PBF-1025
(06-90)

AUXILIARY FEEDWATER RECIRCULATION LINE MODIFICATION

SK-AFW-010/88-099

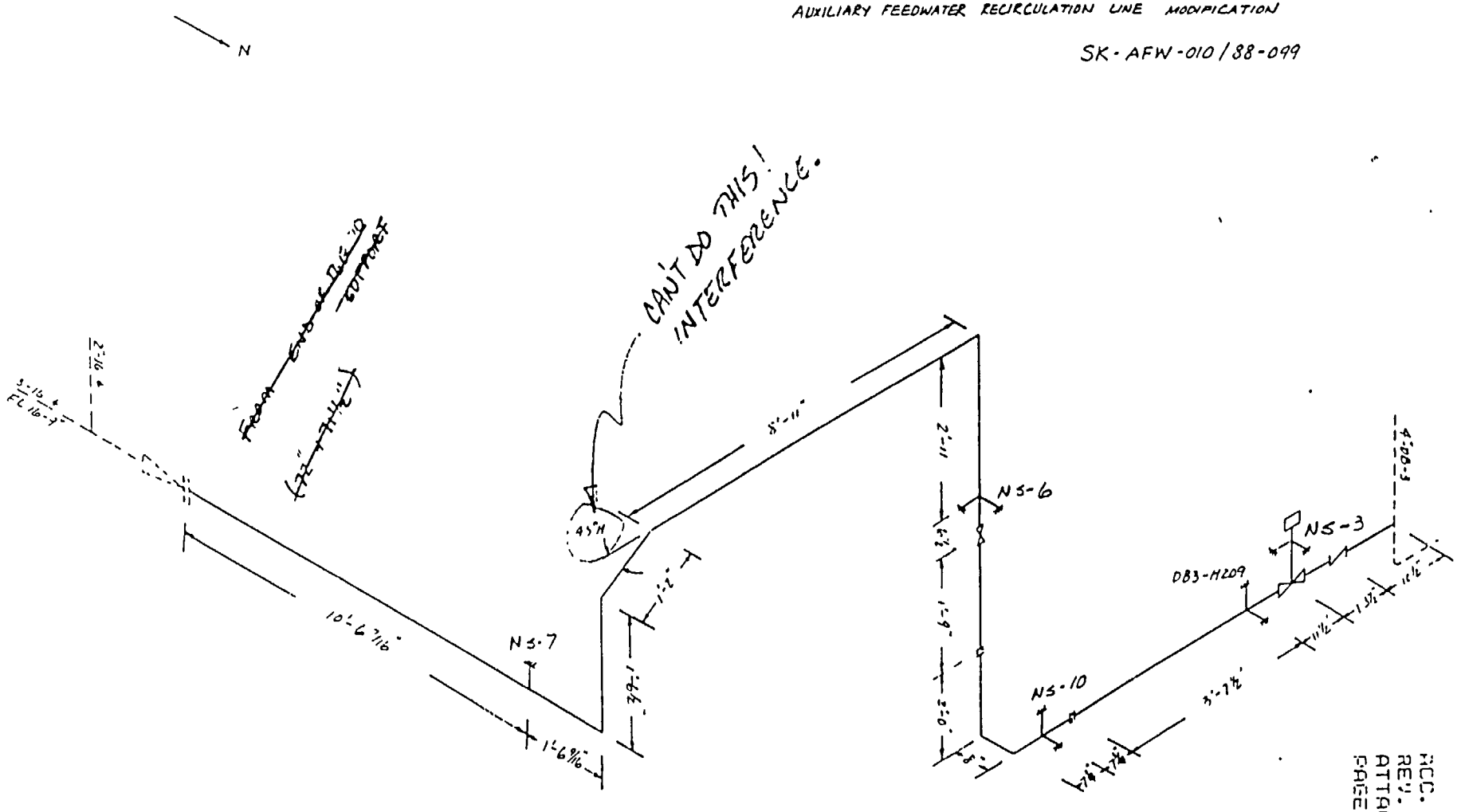

NEW SUPPORTS TO BE INSTALLED ARE LABELED NS-X

NORTH LINE

ECC. NO. 100270
REV. 01
ATTACHMENT E
PAGE 18 OF N/A

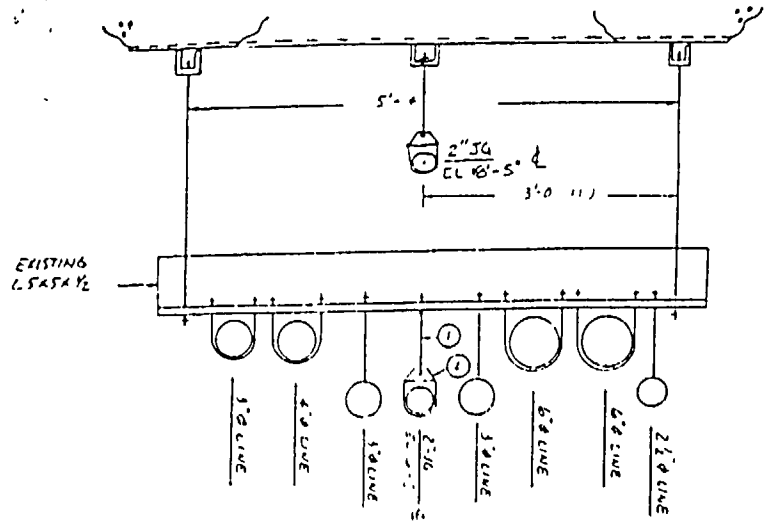

ELEVATION LOOKING NORTH

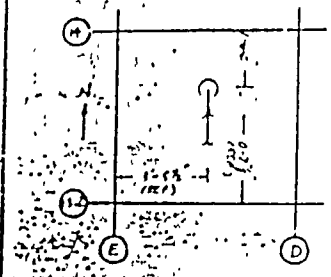

ITEM	QTY.	FIG. NO. PART NO. CALC. NO.	BILL OF MATERIAL DESCRIPTION	WT. (LB.)	RATINGS (LB.) A OR B	C	D
1	1	140	3/4 ø THREADED ROD (LENGTH AT FIELD)				
2	1	260	ADJUSTABLE CLEVIS FOR 2 ø PIPE				
			TOTAL WT.				

FILE NO.

NODE POINT: 2620

SPECIAL INSTRUCTIONS: NEW HANGER ADDED TO SYSTEM. SUPPORT IN. HTS

SUPPORT RATING

ACC. NO. 1000705
REV. 01
PAGE 12

TECHNICAL FILE INDEX:
MODIFICATION REQUEST:
HANGER NO: HTS 7

COMPUTER GRAPHICS SYSTEM

REV. NO.	DATE	REVISION DESCRIPTION	DRAWN	CHK'D	APPRV'D	REL'D

MICROFILM NO.

C.G.S. FILE NO.

SCALE NTS | PAGE I.D. 31628

DRAWN DATE | APPRVD. DATE

CHECKED | APPRVD

DRAWN | APPRVD.

WISCONSIN ELECTRIC

POINT BEACH NUCLEAR PLT UNIT-2
WISCONSIN ELECTRIC POWER CO.
MILWAUKEE, WISCONSIN
PBA-____ SH. ____

B

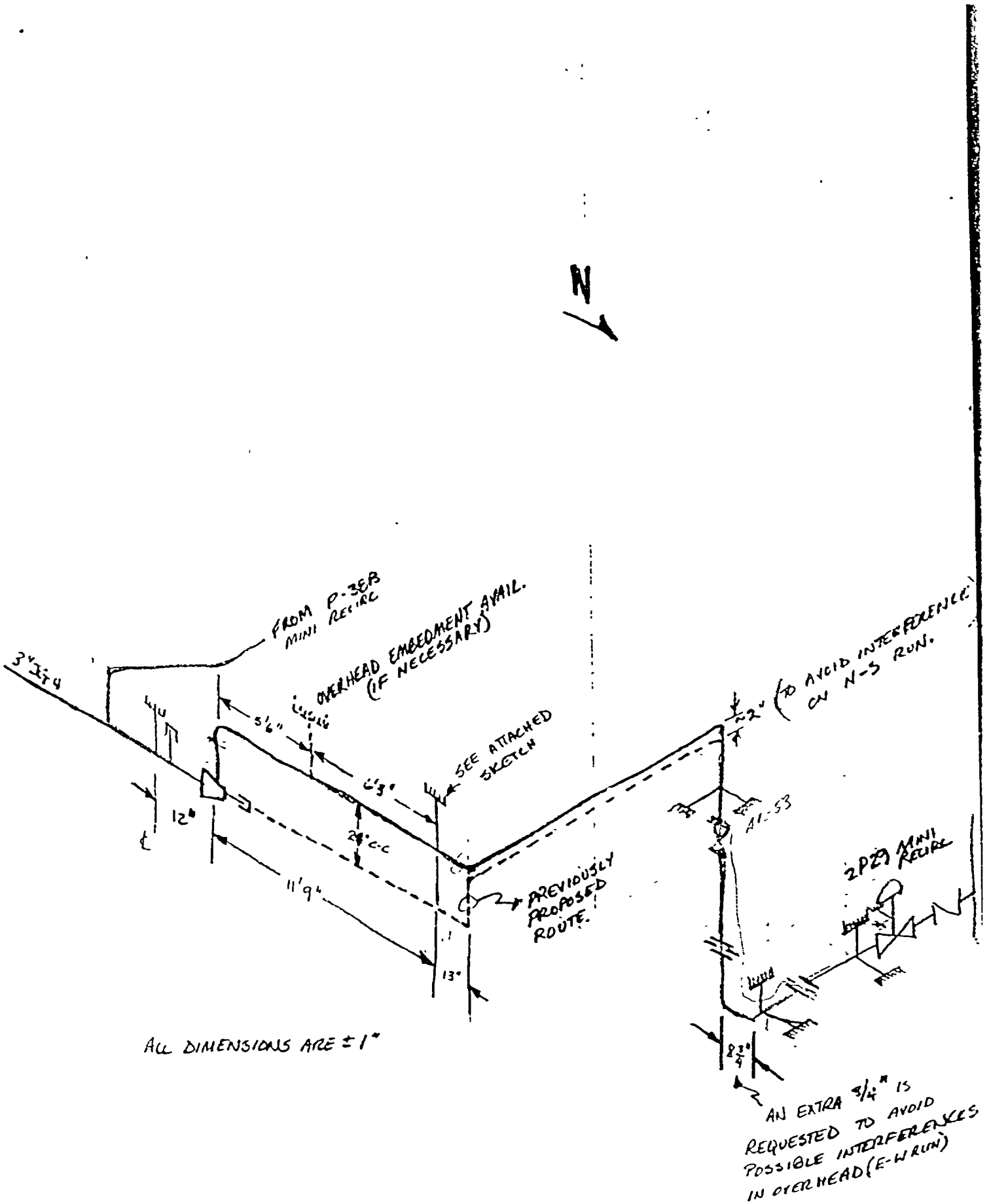
N
FROM P-3EB MINI RECIRC
OVERHEAD EMBEDMENT AVAIL. (IF NECESSARY)
3" I.T.G
5'6"
SEE ATTACHED SKETCH
12"
11'9"
13"
PREVIOUSLY PROPOSED ROUTE.
(TO AVOID INTERFERENCE ON N-S RUN.
A1-53
2PZ) MINI RECIRC
ALL DIMENSIONS ARE ± 1"
AN EXTRA 3/4" IS REQUESTED TO AVOID POSSIBLE INTERFERENCES IN OVERHEAD (E-W RUN)

Wisconsin Electric POWER COMPANY

231 W Michigan, PO Box 2046 Milwaukee WI 53201

NUCLEAR POWER DEPARTMENT
ENGINEERING CHANGE REQUEST

ECR # NE-91-246

Mod # 88-099

Responsible Engineer: Julie Pederson

System: Auxilliary Feedwater

QA Scope [X] Yes [ ] No

Equipment: 1P29 Recirc Line Piping

Reference Documents: SK-AFW-001/88-099, P.O.# 185036

Problem Description and Proposed Change:

On P.O. #185036 a 4"x2", 3000# Stainless Steel ASTM A182 Type 304 Socket-let was ordered. What arrived on site appeared to be a half coupling. Installation personnel questioned the need for reinforcement of the fitting.

Attachments: [ ] Yes [X] No

Initiated By/Date: J. Pederson 5-7-91

Preliminary Approval By/Date:

Resolution Needed by: Date:

Resolution: The manufacturer, WFI, was contacted. The component in question is a "pipet" which is equivalent to a socketlet (The term socketlet per WFI is a "brand" name.) See attached letter from WFI and catalog description. The 3/16" reinforcement which was added to the weld is acceptable.

The "pipet" should be left in place.

Attachments: [X] Yes [ ] No

Change Required:

___ Specs: _____

___ Procedures _____

___ Drawings: _____

___ Other: _____

Design Verification Required: [ ] Yes [X] No

Completed: Date:

MR Addendum Required: [ ] Yes [X] No

Completed: Date:

10CFR50 59 Evaluation Required. [ ] Yes [X] No

Completed: Date:

Resolution By/Date: Julie Pederson 5-8-91

Responsible Engineer Review/Date. Julie Pederson 5-8-91

QA Review By/Date. GM Brown 5/8/91

Group Head Approval/Date: John F. Kaufmann 5/8/91

Additional Reviews By/Date:

Implementation Completed By/Date: DE Duenkel for PG 5-21-91

Form QP 3-4.1
Rev 1

A subsidiary of Wisconsin Energy Corporation

INTERNATIONAL, INC.
WFI®
NUCLEAR PRODUCTS, INC.
MANUFACTURER OF PIPING & PRESSURE VESSEL COMPONENTS

ATTN: John McNAMARA

6 May 1991

To Whom it May Concern.

Subject: Reinforcement of WFI fittings vs Competition.

WFI deisgins and builds its fittings to meet the appllicable codes. Where the fitting is manufactured per ASME Section III criteria the fitting is designed in compliance with the burst test procedures allowed by that code.

These procedures verify that the fitting will meet all of the reinforcement requirements. Other manufacturers may use different manufacturing processes and designs. However, when a fitting has been proven by the procedures specified in the above code, all fittings will have equivalent and sufficient reinforcement.

J. Philip Eilenberger
Engineering Mgr. WFI

MAILING ADDRESS: P.O. Box 7303, Houston, Texas 77248-7303 • PLANT LOCATION: 4405-4411 Heygood, Houston, Texas 77022
TELEPHONE: (713) 692-3822 • 24 HRS: 699-HELP • TELEX: 791328 WFI HOU • WATTS: 800/231-0430 • FAX: (713) 695-3528

Greater design flexibility, 100% pipe strength.

Integrally reinforced, weld-on connections.
WFI Pipets are forged equal and reducing size branch connections which fit any size run pipe, vessel or header configuration.

Full penetration Pipet weld bevels restore the run pipe to 100% of its pressure retaining strength

Available in all configurations and materials.
A full line of 90°, 45° and elbow Pipets is available in butt-weld, socket-weld and threaded designs in all grades of ASTM forging material. Pipets are manufactured in outlet sizes from ⅛" to 54" (3 to 1350 mm) and in all lightweight, standard and heavy wall thicknesses. Height dimensions conform to traditional piping industry standards unless otherwise specified. Special extended neck configurations with or without flanges are available.

Two welds vs. three.
Pipets require only two installation welds vs. three for welding tees. Labor and weld examination costs can be reduced by 30% or more without compromising strength. Fewer welds mean less expense. Pre-formed weld bevels and a contoured footing assure proper installation fit.

Meets all piping codes.

The Pipet design surpasses American, Canadian, United Kingdom and European safety code requirements and standards for pressure design and fatigue endurance.

Patented S/5 and S/10 lightweight stainless Pipets.

WFI Pipets can now replace expensive stainless tees in applications where corrosion resistance or sanitary thin-wall construction is desired. A unique heat-sink ring design minimizes heat distortion during welding. Outlet sizes are available from ½" to 36" (15 to 900 mm) in all pipe sizes. This design is protected by U.S. Patent No. D267 505.

Butt-Weld Pipet*(BWP) Sizes and Dimensions

OUTLET SIZE		STANDARD				EXTRA STRONG				SCHEDULE 160				XXS	
in.	mm	A		C		A		C		A		C		C	
⅛	3	¾	15.9	.269	6.8	⅝	15.9	.215	5.5						
¼	6	⅝	15.9	.364	9.2	⅝	15.9	.302	7.7						
⅜	10	¾	19.1	.493	12.5	¾	19.1	.423	10.7						
½	15	¾	19.1	.622	15.8	¾	19.1	.546	13.9	1¼	28.6	.466	11.8	.252	6.4
¾	20	⅞	22.2	.824	20.9	⅞	22.2	.742	18.8	1¼	31.8	.614	15.6	.434	11.0
1	25	1 1/16	27.0	1.049	26.6	1 1/16	27.0	.957	24.3	1½	38.1	.815	20.7	.599	15.0
1¼	32	1¼	31.8	1.380	35.0	1¼	31.8	1.278	32.5	1¾	44.5	1.160	29.5	.896	22.8
1½	40	1 5/16	33.3	1.610	40.9	1 5/16	33.3	1.500	38.1	2	50.8	1.338	34.0	1.100	28.0
2	50	1½	38.1	2.067	52.5	1½	38.1	1.938	49.2	2 3/16	71.4	1.689	42.9	1.503	38.1
2½	65	1⅝	41.3	2.469	62.7	1⅝	41.3	2.323	59.0	2 7/16	61.9	2.125	54.0	1.771	45.0
3	80	1¾	44.5	3.068	77.9	1¾	44.5	2.900	73.7	2½	73.0	2.624	66.6	2.300	58.4
3½	90	1⅞	47.6	3.548	90.1	1⅞	47.6	3.364	85.4					2.728	69.3
4	100	2	50.8	4.026	102.3	2	50.8	3.826	97.2	3 5/16	84.1	3.438	87.3	3.152	80.0
5	125	2¼	57.2	5.047	128.2	2¼	57.2	4.813	122.3	3 11/16	93.7	4.313	109.6	4.062	103.2
6	150	2⅜	60.3	6.065	154.1	3 1/16	77.8	5.761	146.3	4⅛	104.8	5.189	131.8	4.897	124.4
8	200	2¾	69.9	7.981	202.7	3⅞	98.4	7.625	193.7						
10	250	3 1/16	77.8	10.020	254.5	3 11/16	93.7	9.750	247.7						
12	300	3⅜	85.7	12.000	304.8	4 1/16	103.2	11.750	298.5						
14	350	3½	88.9	13.250	336.6	3 15/16	100.0	13.000	330.2						
16	400	3 11/16	93.7	15.250	387.4	4 3/16	106.4	15.000	381.0						
18	450	3 15/16	99.8	17.250	438.2	4⅜	111.1	17.000	431.8						
20	500	4	101.6	19.250	489.0	4 11/16	119.1	19.000	482.6						
24	600	4 5/16	109.9	23.250	590.6	5½	139.7	23.000	584.2						
26	650	4 11/16	119.1	25.250	641.4	5¾	146.1	25.000	635.0						
30	750	5⅜	136.5	29.250	743.0										
36	900	5⅜	136.5	35.250	895.3										
48	1200	5 15/16	47.6	47.250	1200.2										

Wisconsin Electric POWER COMPANY

231 W Michigan, PO Box 2046, Milwaukee WI 53201

NUCLEAR POWER DEPARTMENT
ENGINEERING CHANGE REQUEST

ECR # NE-91-227

Mod # 88-099

Responsible Engineer: Julie Pederson

System: Aux Feedwater

QA Scope [X] Yes [ ] No

Equipment: Flow Orifice Plate

Reference Documents: P.O. 185010

Problem Description and Proposed Change:
The orifice plates ordered on P.O. 185010 were ordered as Type 316 Stainless Steel. The plates which arrived were Type 304 Stainless Steel.

Attachments: [ ] Yes [X] No

Initiated By/Date: Julie Pederson 4-23-91

Preliminary Approval By/Date:

Resolution Needed by:
Date:

Resolution:
Use one of the plates for installation this outage. The wear characteristics of 316 SS are better than 304 SS but the 304 SS plate is acceptable. Send the other three plates back because we should get what was ordered and paid for.
These orifice plates are outside the QA scope and were ordered non-QA.

Attachments: [ ] Yes [X] No

Change Required: N/A

___ Specs: _____

___ Procedures: _____

___ Drawings: _____

___ Other. _____

Design Verification Required: [ ] Yes [X] No
Completed: Date:

MR Addendum Required: [ ] Yes [X] No
Completed: Date:

10CFR50 59 Evaluation Required: [ ] Yes [X] No
Completed: Date:

Resolution By/Date: Julie Pederson 4-23-91

Responsible Engineer Review/Date: Julie Pederson 4-23-91

QA Review By/Date: 4/23/91 R.E. HEIDEN

Group Head Approval/Date: John F. Ac Adams 4/23/91

Additional Reviews By/Date:

Implementation Completed By/Date: D.E. Quenkel for PG 5-21-91

Form QP 3-4.1
Rev. 1

Wisconsin Electric POWER COMPANY

231 W Michigan, PO Box 2046, Milwaukee WI 53201

NUCLEAR POWER DEPARTMENT
ENGINEERING CHANGE REQUEST

ECR # NE-91-233

Mod # 88-099

Responsible Engineer: Julie Pederson

System: Aux Feedwater

QA Scope |X| Yes |_| No

Equipment: New Recirc Line for 1P29

Reference Documents: SK-AFW-001/88-099

Problem Description and Proposed Change:

① Typographical error on elevation for DB-3-H252, correct value is 14'-4"

② Incorrect length for span across walkway, should be 8'-11" instead of 10'-2".

③ Items 12, 13, & 17 should be .1182 instead of A312 (on B.O.M.)

④ On B.O.M., item 11 is Type 316 instead of type 304L Stainless steel.

③ & ④ Are also typographical errors

Attachments: |_| Yes |X| No

Initiated By/Date: Julie Pederson 4-25-91

Preliminary Approval By/Date: N/A

Resolution Needed by: Date:

Resolution:

Initiate changes to SK-AFW-001 and install piping with changes noted above. The change in the span length was verified to have no adverse effect on the seismic analysis by S&L.

Item ② is outside the QA boundary.

For ③ & ④ changes to the B.O.M. were also initiated.

Attachments: |_| Yes |X| No

Change Required

__ Specs: _____

X Procedures: IWP 88-099 (for B.O.M.)

X Drawings: SK-AFW-001/88-099

__ Other _____

Design Verification Required: |_| Yes |X| No

Completed. Date:

MR Addendum Required. |_| Yes |X| No

Completed: Date:

10CFR50.59 Evaluation Required: |_| Yes |X| No

Completed: Date:

Resolution By/Date: Julie Pederson 4-25-91

Responsible Engineer Review/Date: Julie Pederson 4-25-91

QA Review By/Date: [illegible] 4/25/91

Group Head Approval/Date: [illegible] 4/25/91

Additional Reviews By/Date: Andrew J. Puntes for R.E. Heider 4/25/91

Implementation Completed By/Date: [illegible] for PG 5-21-91

Form QP 3-4.1
Rev. 1

Wisconsin Electric POWER COMPANY

231 W Michigan PO Box 2046 Milwaukee WI 53201

NUCLEAR POWER DEPARTMENT
ENGINEERING CHANGE REQUEST

ECR # NE-91-249

Mod # 88-099

Responsible Engineer: Julie Pederson

System: Auxilliary Feedwater

QA Scope [X] Yes [ ] No

Equipment: 1P29 Recirc Line Piping Support DB-3-H251

Reference Documents: PBA-4070 Sheet 2.

Problem Description and Proposed Change:

The support DB-3-H251 cannot be mounted as shown on PBA-4070 Sh.2. The size of the valve diameter results in the angle iron on the H-frame missing the back plate. In addition the H-frame should be installed right below the body to bonnet flange so that the valve is accessible for maintenance and disassembly.

Attachments: [ ] Yes [X] No

Initiated By/Date: J. Pederson 5-8-91

Preliminary Approval By/Date:

Resolution Needed by: Date:

Resolution:

Per Sargent & Lundy the base plate width will be increased from 12" to 14" and the H-frame will be lowered to below the body to bonnet flange (6 1/4" ± 1/2" from the center line of the piping). Analysis will be documented in final report from S&L

Attachments. [ ] Yes [X] No

Change Required:

___ Specs

___ Procedures:

X Drawings. PBA-4070 Sh.2

___ Other:

Design Verification Required: [ ] Yes [X] No

Completed. Date:

MR Addendum Required: [ ] Yes [X] No

Completed: Date:

10CFR50 59 Evaluation Required [ ] Yes [X] No

Completed: Date:

Resolution By/Date: Julie Pederson 5-8-91

Responsible Engineer Review/Date: Julie Pederson 5-8-91

QA Review By/Date: [signature] 5/8/91

Group Head Approval/Date: [signature] 5/8/91

Additional Reviews By/Date:

Implementation Completed By/Date: DE Duenbel for PG 5-21-91

Form QP 3-4.1
Rev. 1

Wisconsin Electric POWER COMPANY

231 W Michigan PO Box 2046 Milwaukee WI 53201

NUCLEAR POWER DEPARTMENT
ENGINEERING CHANGE REQUEST

ECR # NE-91-233

Mod # 88-099

Responsible Engineer: Julie Pederson

System: Aux Feedwater

QA Scope: [X] Yes [ ] No

Equipment: New Recirc Line for 1P29

Reference Documents: SK-AFW-001/88-099

Problem Description and Proposed Change:

① Typographical error on elevation for DB-3-H252, correct value is 14'-4"

② Incorrect length for span across walkway, should be 8'-11" instead of 10'-2".

③ Items 12, 13, & 17 should be A182 instead of A312 (on B.O.M.)

④ On B.O.M., item 11 is Type 316 instead of type 304L Stainless steel.

③ & ④ Are also typographical errors

Attachments: [ ] Yes [X] No

Initiated By/Date: Julie Pederson 4-25-91

Preliminary Approval By/Date: N/A

Resolution Needed by Date:

Resolution:

Initiate changes to SK-AFW-001 and install piping with changes noted above. The change in the span length was verified to have no adverse effect on the seismic analysis by S&L.

Item ② is outside the QA boundary.

For ③ & ④ Changes to the B.O.M. were also initiated.

Attachments: [ ] Yes [X] No

Change Required

___ Specs

X Procedures. IWP 88-099 (for B.O.M.)

X Drawings SK-AFW-001/88-099

___ Other:

Design Verification Required [ ] Yes [X] No

Completed: Date:

MR Addendum Required: [ ] Yes [X] No

Completed: Date:

10CFR50 59 Evaluation Required: [ ] Yes [X] No

Completed Date.

Resolution By/Date: Julie Pederson 4-25-91

Responsible Engineer Review/Date: Julie Pederson 4-25-91

QA Review By/Date: Michael A. Hoppenrath 4/25/91

Group Head Approval/Date: John F. Hickman 4/25/91

Additional Review By/Date: Andrew J. Plunkett for R.E. Heins 4/25/91

Implementation Completed By/Date: D.E. Quentel for PG 5-21-91

Form QP 3-4
Rev 1

Wisconsin Electric POWER COMPANY

231 W Michigan PO Box 2046 Milwaukee WI 53201

NUCLEAR POWER DEPARTMENT
ENGINEERING CHANGE REQUEST

ECR # PB-91-057

Mod # 88-099*B

Responsible Engineer: J. A. Schroeder

System: Aux Feed Water

QA Scope [X] Yes [ ] No — Portions of Mod are QA

Equipment: AFW Mini Recirc Flow Indicators FIT-04050A & B

Reference Documents:

Problem Description and Proposed Change:

Propose rerouting cable and conduit supplying 120 VAC to the flow indicators to reduce installation time during the 7 day ~~diesel outage~~ LCR SMS. Both indicators will still be supplied from Panel 7L, breaker 25. No additional weight will be added to any existing ~~safety~~ raceway and the new conduit will be seismically mounted to meet the 2 over 1 criteria.

Attachments: [ ] Yes [ ] No

Initiated By/Date: 9/5/91

Preliminary Approval By/Date:

Resolution Needed by: Date:

Resolution: Per above, install a junction box and terminal strip in the conduit run supplying the receptacle in the P-38A cubicle. From this junction box power can then be routed to the existing receptacle and to TB 141 (FIT-04050A). This will significantly reduce the amount of new conduit to be installed. The power supply is non-safety related and the seismic concerns are addressed as in the original design.

Attachments: [ ] Yes [X] No

Change Required:

___ Specs. ___

___ Procedures ___

[X] Drawings: SK-AFW-012/88-099, SK-AFW-011/88-099

___ Other: ___

Design Verification Required: [ ] Yes [X] No

Completed: Date

MR Addendum Required: [ ] Yes [X] No

Completed: Date:

10CFR50.59 Evaluation Required: [ ] Yes [X] No

Completed: Date:

Resolution By/Date 9/5/91

Responsible Engineer Review/Date 9/5/91

QA Review By/Date: 9-5-91

Group Head Approval/Date 9-5-91

Additional Reviews By/Date: NA

Implementation Completed By/Date 9/6/91

Form OP 3-4 1
Rev 1

Wisconsin Electric POWER COMPANY

231 W Michigan, PO Box 2046 Milwaukee WI 53201

NUCLEAR POWER DEPARTMENT
ENGINEERING CHANGE REQUEST

ECR # PB-91-055

Mod # 88-099 rB

Responsible Engineer: John A. Schroeder

QA Scope [X] Yes [ ] No — Portions of Mod are QA

System: AF

Equipment: AFW Mini-Recirc Line Flow Transmitter Support Stands

Reference Documents: SK-AFW-013/88-099

Problem Description and Proposed Change:

Revision ϕ of the drawing for the flow transmitter support stands SK-AFW-013/88-099 shows an 8" length for the pipe and a 4" length from the end of the pipe to the transmitter centerline. With these dimensions the transmitter would be located so close to the wall that access for maintenance/calibrating would not be possible.

Attachments: [ ] Yes [X] No

Initiated By/Date: John A Schroeder

Preliminary Approval By/Date: N/A

Resolution Needed by: Date:

Resolution:

Change the dimensions mentioned above to ≈13" and ≈ 3". This support does not need to be seismic since it supports the non-seismic flow indicating transmitter and there is no safety related seismic equipment below where the transmitter will be mounted.

Attachments: [ ] Yes [X] No

Change Required.

___ Specs: ___

___ Procedures ___

X Drawings SK-AFW-013/88-099 (to be as-built after the modification is complete.)

___ Other: ___

Design Verification Required: [ ] Yes [X] No
Completed: Date:

MR Addendum Required. [ ] Yes [X] No
Completed: Date:

10CFR50.59 Evaluation Required: [ ] Yes [X] No
Completed: Date:

Resolution By/Date: John A Schroeder 8/28/91

Responsible Engineer Review/Date: John A Schroeder 8/28/91

Group Head Approval/Date: W B [illegible] 8/28/91

QA Review By/Date: [illegible] 8/28/91

Additional Reviews By/Date

Implementation Completed By/Date:

Form CP 3-4 1
Rev. 1

DESIGN VERIFICATION NOTICE

Title of Document Mod 4 IWP 88-099*C (2P29 Min-Recirc)

Document No. — Rev. — Date —

Design Verification Method: ☒ Design Review ☐ Alternate Calcs

☐ Qualification Testing

Reviewer: John A. Schroeder

REVIEW CHECKLIST CONSIDERATIONS:

		YES	NO	N/A
1.	Were the inputs correctly selected and incorporated into design?	✓		
2.	Are assumptions necessary to perform the design activity adequately described and reasonable? Where necessary, are the assumptions identified for subsequent reverifications when the detailed design activities are completed?	✓		
3.	Are the appropriate quality and quality assurance requirements specified?	✓		
4.	Are the applicable codes, standards, and regulatory requirements including issue and addenda properly identified and are their requirements for design met?	✓		
5.	Have applicable construction and operating experience been considered?	✓		
6.	Have the design interface requirements been satisfied?	✓		
7.	Was an appropriate design method used?	✓		
8.	Is the output reasonable compared to inputs?	✓		
9.	Are the specified parts, equipment and processes suitable for the required application?	✓		
10.	Are the specified materials compatible with each other and the design environmental conditions to which the material will be exposed?	✓		
11.	Have adequate maintenance features and requirements been specified?			
12.	Are accessibility and other design provisions adequate for performance of needed maintenance and repair?	✓		

DESIGN VERIFICATION NOTES (continued)

13. Has adequate accessibility been provided to perform the inservice inspection expected to be required during the plant life?	✓		
14. Has the design properly considered radiation exposure to the public and plant personnel?			✓
15. Are the acceptance criteria incorporated in the design documents sufficient to allow verification that design requirements have been satisfactorily accomplished?	✓		
16. Have adequate pre-operational and subsequent periodic test requirements been appropriately specified, including acceptance criteria?	✓		
17. Are adequate handling, storage, cleaning, and shipping requirements specified?	✓		
18. Are adequate identification requirements specified?	✓		
19. Are requirements for records adequately specified?	✓		
20. Will the change remain within the analyzed or specified capabilities of any affected equipment?	✓		
21. Has a field inspection been done?	✓		
22. Have impacts on other systems been identified?	✓		

COMMENTS: None _____ Attached ✓ (Use Form QP 5-3.1)

Reviewed by: John H. Schroeder Date 10/1/91

Approval by: _____ Date _____

NUCLEAR POWER DEPARTMENT
DOCUMENT REVIEW

3 Doc. Review Package No. N/A

Sheet 1 of 3

INITIATOR

1 Document Title/Number/Revision/Date
MR 88-099*C (2P29 Mini-Recirc Mod)

2 To: Location: Trans. #:
From: Date: Supt. Approval:
PLEASE REVIEW THIS DOCUMENT AND RETURN COMMENTS PRIOR TO

BLOCKS 4-6 TO BE COMPLETED BY REVIEWING ORGANIZATION

6 To: T.D. Mielke Location: PBNP Trans. #: N/A
From: J.A. Schroeder Date: 10/1/91 Supt. Approval: N/A
FEEDBACK REQUESTED: ☐ ORAL ☒ WRITTEN ☐ NONE

4 Comments:

1. The manual handwheel on the control valve needs to be painted orange for Appendix R concerns.

2. The design states that one existing restraint will be removed, aren't two supports removed ?

3. The final design should mention the re-tubing of the air supply to the solenoid valve and the addition of a test connection valve.

4. Final design states that the new setpoints on 2dPIS-4002 will be tested in the IWP, however this testing is not done in the IWP and would require flow to the S/Gs.

5. May want to note that ECR 91-46 applies to the sockolet being used on the mini-recirc return header.

6. The final design checklist states that GDC 35 applies, there are several other GDC that apply.

7. Final design checklist state that IT-09 is the only procedure requiring a change, several other procedures must also be changed.

7 Resolution:

1. STEP ADDED TO IWP.
2. CHANGED DESIGN DESC. TO STATE THAT ONE RESTAINT & ONE HANGER WILL BE REMOVED.
3. IWP WILL CALL OUT TUBING REPLACEMENT. THIS IS A NICE-TY, NO NEED TO MENTION IN F.D.D.
4. PER I&C, SETPOINTS WILL BE ADJUSTED & CALIBRATED ELECTRONICALLY. FUNCTIONAL TEST WILL NOT BE DONE SINCE IT WOULD REQUIRE FLOW TO GENERATORS.
5. NOTE ADDED.
6. OTHER GDCs ADDED.
7. IT-09, 09A, 295, -295A: DUCOC UPDATED.

5 Comments By/Date:
John A Schroeder 10/1/91

8 Resolution By/Date:
T D Mielke 10/1/91

9 Review Date:
John A Schroeder 10/1/91

Copies to: Initiator
File

Form QP 5-3.1
Rev. 1

NUCLEAR POWER DEPARTMENT
DOCUMENT REVIEW
CONTINUATION

1 Document Title/Number/Revision/Date

MR 88-099*C (2P29 Mini-Recirc Mod)

BLOCK 4 TO BE COMPLETED BY REVIEWING ORGANIZATION

4 Comments:

8. IWP step 1.2, delete the Note and Caution statements as these are covered in section 3.

9. List the plant conditions required for installation as a pre-requisite.

10. Specify if the two sections in Phase II can be worked simultaneously and specify which steps may be worked out of sequential order.

11. Note that the adjustments to PC-4012 and PC-4019 are not to be done at the same time since they make the P-38A & P38B discharge valves go full open introducing a pump runout concern.

12. IWP step 3.1.2.i., install the ID tag on new valve AF-53 prior to doing the tag out.

13. IWP 3.1.3.i., note that the flow plate has a proper orientation.

14. IWP step 3.1.3.m., also install a test connection valve and note that the installation is to be basically identical to the 1P29 job.

15. IWP step 3.1.12.i, the setpoints on the dPIS may not be able to be changed at this point in the procedure, I believe the power to the dPIS is tagged out.

16. IWP step 3.1.12.j, move the tagout done in this step (if necessary) to a seperate preceding step with an OPS signoff. Note that the limit switch and SOV circuits are already tagged out via step 3.1.1. This work should reference electrical spec PB-220 since it is QA wiring.

17. Suggest moving the NDE in IWP step 4.3.2 in to the installation section in case repair welds are necessary.

7 Resolution:

8. TRUE, COVERED IN SECT. 3, BUT WON'T HURT UP HERE. LEFT AS IS.

9. ADDED

10. ADDED NOTE TO ALLOW THIS.

11. ADDED NOTE.

12. ADDED STEP.

13. ADDED NOTE.

14. ADDED REFERENCE TO VALVE AND LAYOUT.

15. ~~ADDED STEP TO RESTORE CONTROL POWER PRIOR TO CHANGE.~~ POWER SUPPLY NOT AFFECTED. DGA

16. BROKE THIS STEP UP TO CLARIFY WHO DOES WHAT; AND PB-196 IS ADEQUATE PER RWK.

17. DONE.

NUCLEAR POWER DEPARTMENT
DOCUMENT REVIEW
CONTINUATION

1 Document Title/Number/Revision/Date

MR 88-099+c (2P29 Mini-Recirc Mod)

BLOCK 4 TO BE COMPLETED BY REVIEWING ORGANIZATION

4 Comments:

18. IWP step 4.3.2, do not fill and vent the pump at this time. Specify filling and venting the line between the check valve and manual valve for the hydro. Also, add a note to the hydro sheet requiring that a pump vent valve is open to prevent over pressurizing the pump if the check valve leaks by.

19. IWP step 5.1, require that the ID tags be installed and the ITs revised before mod acceptance.

7 Resolution:

18. CHANGED ACCORDINGLY.

19. ADDED.

FINAL DESIGN CHECKLIST

Title of Document Increased Aux Feedwater Pump Mini-Recirc. Line Flow Capacity

Document No. M.R.88-099*C Rev. 0 Date 5-31-91

INSTRUCTIONS:

A. Answer all questions in the checklist: (Note: if an entire section is not applicable, the section heading (e.g. 2.0 Mechanical Design Criteria) may be marked "NA" and a line drawn through the other items.)

B. A short explanation should be provided for the following two cases: (1) questions marked (*) which are answered No and (2) questions not marked (*) answered Yes. The explanation may be noted on this checklist or on QP 3-2.3, Final Design Checklist Explanation Sheet. Designer indicates answers using an (X). Reviewer indicates answers using a (✓).

REVIEW CHECKLIST CONSIDERATIONS:

	YES	NO	N/A
1. Are any of the general design criteria (FSAR, Section 1.3) applicable? CRITERION 35,1,2	X ✓	~~X~~	
2. Mechanical Design Criteria			
Will the change:			
a. Affect seismic boundaries? The entire recirc line will be seismic. Previous boundary @ manual isolation.	X ✓	~~X~~	
b. Affect seismically qualified equipment? Seismic analysis is being completed by Sargent & Lundy.	X ✓		
c. Require seismic category "2 over 1" analysis?		X ✓	
d. Affect the assigned system design pressure or temperature?		X ✓	
*e. Be of a material compatible with the existing installation?	X ✓		
f. Require identification of applicable ASME B&PV codes and standards? 2AF-4002 was verified manufactured in accordance with ASME Section III. Hydro testing to ASME XI.	X ✓		
g. Require State of Wisconsin Administrative code permits/approvals? The ANI will be contacted prior to installation and QC will be asked to submit form SB190 (ref. ILHR 41.50)	X ✓		
*h. Have materials, protective coatings, and corrosion characteristics compatible with existing plant components?	X ✓		
i. Add a system/component to be included in the ASME B&V Section XI Inservice Inspection Program?		X ✓	
j. Require a new penetration in a primary system boundary?		X ✓	
k. Increase the potential for flooding?		X ✓	
l. Degrade existing flood barriers?		X	

REVIEW CHECKLIST CONSIDERATIONS: (continued)	YES	NO	N/.
3. Electrical Design Criteria			
Will the change:			
a. Affect the station electrical system?		X	
b. Affect the station grounding or lightning protection system?		X	
*c. Be compatible with existing electrical insulation and wiring?	X		
d. Create an electrical problem in any of its failure modes?		X	
*e. Be compatible with service transformer capacity?	X		
f. Make any vital circuit susceptible to ground?		X	
g. Require redundancy, diversity, and separation?		X	
h. Require State of Wisconsin Administrative Code permits/approval?		X	
i. Be seismically qualified? THE CONDUITS ROUTED IN THE AFP CUBICLE WILL BE SEISMICALLY QUALIFIED.	X	X	
*j. Maintain UL (or equivalent) listings?		X	
4. Mechanical Service System			
Will the change:			
a. Require service water?		X	
b. Require closed loop cooling?		X	
c. Require instrument air? The existing air supply will be reused.	X		
d. Require service air?		X	
e. Increase heating, ventilation, or air conditioning (HVAC) loading?		X	
f. Require demineralized water?		X	
g. Require raw water?		X	
h. Affect any other mechanical service system?		X	
i. Require lubrication?		X	
j. Require an independent means of pressure relief?		X	
5. Electrical Distribution System			
Will the change:			
a. Affect electrical system capacity, output, or voltage?		X	
b. Add more emergency diesel and/or station battery loading?		X	

REVIEW CHECKLIST CONSIDERATIONS: (continued)

		YES	NO	N/A
c.	Add load to a vital bus?		X	
d.	Add load to a non-vital bus? Transmitter requires 10.5 to 55 Vdc (off a non-SR circuit)	X		
e.	Add new raceways? See Attached loading analysis. JMS 9/20/91 A short run of conduit will be installed.	X		
f.	Add cables to existing electrical raceways?		X	
g.	Be routed through a fire wrapped cable tray?		X	
*h.	Comply with thermal and electrical separation requirements?	X		
*i.	Comply with protective relaying requirements of equipment and systems?	X		
6.	Fire Protection			
	Will the change:			
a.	Affect fire protection requests listed in Section 6.1.1 of the FPER? CONSERVATIVELY, YES.	X		
b.	If the answer to "a" is yes, an evaluation must be performed per Section 6.2.2 of the FPER. Evaluation is attached.	X		
c.	Affect access to a fire zone, fire protection equipment or Appendix R safe shutdown equipment?		X	
d.	Open a fire barrier?		X	
e.	Affect fire protection system performance?		X	
f.	Increase combustible loading in a room?		X	
g.	Based on FPER Section 7.3, will the change affect the existing fire protection features of an Appendix R safe shutdown fire zone?		X	
h.	Based on FPER Sections 4.4 and 4.5, will the change add to, delete from, or revise the listed systems and components?		X	
i.	If the answer to any item c through h is yes, a reevaluation must be performed per Section 6.2.10 of the FPER.			X
7.	Security System			
	Will the change:			
a.	Be in a vital area? Work will be in the Aux FW Pump Room.	X		
b.	Require work near a vital area?		X	
c.	Require work within 20' of fence?		X	
d.	Affect security equipment and documents (including those containing safeguards information)?		X	

REVIEW CHECKLIST CONSIDERATIONS: (continued)

		YES	NO	N/
e.	Affect access controls?		X	
8.	Structural Design Criteria			
	Will the change:			
a.	Add weight between existing pipe supports, hangars, or foundations? Analysis is being completed by Sargent & Lundy.	X		
b.	Require addition of new supports, hangers, or foundations? See above.	X		
c.	Affect stress calculations of pipe? See above.	X		
d.	Affect the loading or load capabilities of existing embeds or other anchor points?		X	
e.	Require changes to existing equipment foundations?		X	
f.	Affect accessibility of any equipment?		X	
g.	Require a floor or wall loading analysis?		X	
h.	Affect or be impacted by masonry block walls?		X	
i.	Decrease free volume of containment?		X	X
j.	Change the amount of exposed aluminum in containment?		X	X
k.	Introduce materials into containment that could affect sump performance or lead to equipment degradation?		X	X
l.	Create an external or internal missile hazard?		X	
m.	Be affected by winds or storms?		X	
n.	Add a dynamic or potentially dynamic load to the system?		X	
o.	Affect wall stress calculations for pressurized concrete cubicles or structures?		X	
p.	Require core drills, expansion anchors, or re-bar cuts? Expansion anchors will be used on supports. Installed per MI 7.1 or equivalent.	X		
q.	Require clearance review for seismic movement or thermal expansion considerations? Analysis is being completed by Sargent & Lundy.	X		
r.	Change plant drainage/backfill requirements?		X	
s.	Require protection from high energy line break jet?		X	
t.	Require a penetration in the containment boundary?		X	
u.	Require State of Wisconsin Administrative Code permits/approvals? For piping but not for structure.	X	X	

REVIEW CHECKLIST CONSIDERATIONS: (continued)

	YES	NO	N/A
9. Operability			
Will the change:			
*a. Require construction verification and/or start-up (operability) testing? TESTING PER INP	X		
b. Require additional operations or maintenance staff?		X	
c. Require specially trained operators or maintenance personnel?		X	
d. Require procedure changes? IT-69	X	X	
e. Require a testability review?		X	
f. Require special testing procedures or equipment or impact other systems during testing?		X	
g. Potentially impact other systems, components, or structures.		X	
10. Hydraulic Design Criteria			
Will the change:			
a. Affect pump NPSH? COULD INCREASE NPSH REQUIRED BUT WOULD STILL BE < NPSH AVAILABLE (SEE EXPLAINATION IN FINAL DESIGN)	X	X	
b. Affect calculated pipe pressure drop?	X		
c. Affect fluid pressure?	X		
d. Affect fluid velocity?	X		
e. Affect system capacity or output?	X		
11. Fuel integrity considerations			
Will the change:			
a. Increase the potential for fueld handling damage?		X	
b. Present the potential for introducing foreign material/debris into the RES or connecting systems?		X	
c. Increase core barrier "baffle jetting"?		X	
12. Chemistry Effects			
Will the change:			
a. Be a potential source of chemical contaminants? SO PIPE WILL BE FLUSED & WIPED DOWN TO REMOVE POTENTIAL CONTAMINENTS.	X	X	
b. Require establishment of chemistry limits?		X	
c. Require any routine chemical analyses?		X	
d. Require provisions for sampling?		X	
e. Require chemical additives?		X	
f. Affect presently established chemistry limits?		X	

No effect on system operability. Calculations attached to the Final Design Description will verify test flow conditions.

REVIEW CHECKLIST CONSIDERATIONS: (continued)

	YES	NO	N/
13. ALARA Considerations			
Will the change:			
a. Install any equipment in high radiation or containment areas?		X	
b. Involve cobalt-laden materials in any primary systems?		X	
c. Result in an anticipated increase in operational or maintenance exposures?		X	
d. If the answer to "a", "b", "c" is yes, then an ALARA design review shall be performed using DG-G03, "ALARA Consideration Guidelines for Design and Installation." This review shall be documented on Form QP 3-2.2, "Final Design Checklist Explanation Sheet."			X
e. Result in an expected exposure of greater than 1 Rem for any individual during installation of the change?		X	
f. Result in an anticipated collective exposure of greater than 2 Rem for the installation of the change?		X	
g. If the answer to "e" or "f" is yes, then an ALARA review shall be performed for the installation aspects of the change per PBNP 3.7.4, "Radiological Review Guideline."			X
14. Environmental Conditions			
Will the change:			
a. Require special handling, shipping, or environmental conditions for storage or construction?		X	
b. Be subject to adverse environmental conditions during storage or construction?		X	
*c. Require environmental qualification (EQ)? Equipment not required to operate in a harsh environment.		X	
d. Be attached to an EQ system/component?		X	
e. Modify HVAC requirements in the area?		X	
f. Change environmental parameters (e.g., temperature radiation, humidity)?		X	
15. Industrial Safety			
Will the change:			
a. Create a personnel hazard?		X	
b. Introduce hazardous material into the plant?		X	
c. Affect evacuation routes?		X	

REVIEW CHECKLIST CONSIDERATIONS: (continued)

	YES	NO	N/A
d. Require that electrical equipment be grounded? Enclosure will be grounded.	X		
*e. Meet OSHA regulations?	X		
16. Instrumentation and Control			
Will the change:			
*a. Have sufficient instruments for operators to monitor the process?	X		
*b. Have appropriate instrument scales?	X		
*c. Have the instruments, control switches, and indicating devices been appropriately located for human factors (both for operational and maintenance)?	X		
*d. Have alarms for off-normal conditions? Instrumentation is for test indication only.		X	
*e. Be capable of or require remote and/or automatic operation? Instrumentation is for test indication only. (No control function.)		X	
*f. Be capable of or require manual operation?	X		
g. Require calibration and maintenance requirements for the instruments to be specified?		X	
*h. Have specified the instruments with proper range and accuracy?	X		
17. Failures Modes and Effects Analysis			
Note: *This section is applicable to all modifications. See IEEE 352-1975 "IEEE Guide for General Principles of Reliability Analysis of Nuclear Power Generating Station Protective System"*			
Is it necessary that the design consider:			
a. How each portion of the configuration change may conceivably fail?	X		
b. What mechanisms might produce these modes of failure?	X		
c. What the effects could be if the failure did occur?	X		
d. If the postulated failure is in a safe or unsafe direction?	X		
e. How the failure would be detected?	X		
f. What inherent provisions are included to compensate for the failure?	X		

See 50.59 for analysis of a-f above.

REVIEW CHECKLIST CONSIDERATIONS: (continued)

	YES	NO	N/
18. Installation			
Will the change:			
a. Present installation impacts on plant operations? Will be addressed on the IWP.	X		
b. Will the installation activities increase the probability for, or consequences of flooding?		X	
19. QA Requirements			
Will the change:			
a. Affect QA-scope systems or boundaries? Aux Feedwater	X		
b. Require material certification? For the control valve, Check Valve, QA fittings & piping.	X		
c. Require personnel qualifications? For welding & NDE.	X		
20. Operating Experience			
Will the change:			
a. Incorporate new types/modes of equipment not presently used at PBNP?		X	
b. Benefit from a database search of the NODIL, NPRDS, CHAMPS, INPO Keywords, or other databases?		X	

Designed by: Julie Pederson / [illegible] 1/29/91 Date 6-3-91

Reviewed by: [illegible] Date 10/1/91

Comments: ☐ None ☒ Attached on QP 5-3.1

Resolution by: _____ Date _____

POINT BEACH NUCLEAR PLANT

FIRE PROTECTION CONFORMANCE CHECKLIST

MR Number 88-099XC Unit 1 _____ Unit 2 X Common Facilities _____

System Aux Feedwater Location Fire Zone 304

NOTE: FPER 6.2.2.1 Complete Sections 1.0 - 4.6 for industrial fire safety.
FPER 6.2.2.2 Complete Sections 1.0 - 10.5 for Appendix R compliance.

1.0 PLANT ACCESS

1.1 Does the modification add/delete/revise any doors, walls, structures or equipment that may impede or alter access to a fire?

☐ Yes, go to 1.2
☒ No, go to 1.3

Comments: _____

1.2 Are alternate access routes available to the area of concern?

☐ Yes, go to 1.3
☐ No, go to 1.8, complete actions and resume at 1.3.

Comments: _____

1.3 Does the modification add/revise/remove ventilation that may either directly or indirectly alter air flow within an area or from area to area to impede access to a fire?

☐ Yes, go to 1.8, complete actions and resume at 1.4.
☒ No, go to 1.4

Comments: _____

1.4 Does the modification require installation of locks on previously unlocked doors or structural changes such as the addition/deletion/revision of walls, stairways, or doors?

☐ Yes, go to 1.5
☒ No, go to 1.6

Comments: _____

1.5 Does the installation of locks or structural changes affect the existing access/egress routes for fire fighting activity, safe shutdown equipment operations, and/or post-fire repairs?

☐ Yes, go to 1.8, complete actions and resume at 1.6.
☐ No, go to 1.6

Comments: _____

PBF-2060
(10-90)

1.6 Does the modification affect the Appendix R safe shutdown timelines (time and motion study for AOP-10A and AOP-10B contained in FPER Section 4.7)?

☐ Yes, go to 1.8, complete actions and resume at 1.7.
☒ No, go to 1.7

Comments: _____

1.7 Does the modification block safe shutdown equipment or a local control station required to be accessible for safe shutdown?

☐ Yes, go to 1.8, complete actions and resume at 2.1.
☒ No, go to 2.1

Comments: _____

1.8 The modification affects plant accessibility. List the access effect(s) and refer to FPER, Section 6.2.10, RESUME checklist completion.

Access Effects: _____

2.0 APPENDIX R BARRIERS

2.1 Does the modification delete any fire barriers/area appearing in FPER, Section 3.0?

☐ Yes, go to 2.2
☒ No, go to 2.3

Comments: _____

2.2 Has a new barrier/area been defined?

☐ Yes, go to 2.3
☐ No, go to 2.14, complete actions and resume at 2.3.

Comments: _____

2.3 Does the modification revise any existing fire barriers (e.g., changes to supporting structural steel, barrier thickness or material, etc.)?

☐ Yes, go to 2.14, complete actions and resume at 2.4.
☒ No, go to 2.4

Comments: _____

2.4 Does the modification add/delete/revise any penetrations to fire barriers due to cables or pipes?

☐ Yes, go to 2.5
☒ No, go to 2.6

Comments: _____

2.5 Are the appropriate barrier penetration procedures specified?

☐ Yes, go to 2.6
☐ No, go to 2.14, complete actions and resume at 2.6.

Comments: _____

2.6 Does the modification add or replace any fire doors, frames or dampers?

☐ Yes, go to 2.7
☒ No, go to 2.8

Comments: _____

2.7 Do the new/replaced dampers/doors/frames meet requirements for rated fire barriers in the fire area and fire damper installation configurations as specified in FPER Section 7.3?

☐ Yes, go to 2.8
☐ No, go to 2.15, complete actions and resume at 2.8.

Comments: _____

2.8 Does the modification add or relocate any cable raceways to a location which presents intervening combustibles between redundant safe shutdown trains?

☐ Yes, go to 2.9
☒ No, go to 2.10

Comments: _____

2.9 Does the modification include installation of approved fire stops?

☐ Yes, go to 2.10
☐ No, go to 2.5, complete actions and resume at 2.10.

Comments: _____

2.10 Does the modification add/delete/revise any cable to an existing raceway which presents intervening combustibles between redundant safe shutdown trains?

☐ Yes, go to 2.11
☒ No, go to 2.12

Comments: _____

2.11 Does the modification include installation/reinstallation of approved fire stops?

☐ Yes, go to 2.12
☐ No, go to 2.15, complete actions and resume at 2.12.

Comments: _____

2.12 Does the modification add/delete/revise any curb, dikes, or drains in the area as described in FPER Section 5?

☐ Yes, go to 2.14, complete actions and resume at 2.13.
☒ No, go to 2.13

Comments: _____

2.13 Does the modification obstruct, remove/revise any suppression system or water spray nozzles or plume impingement shields in the area?

☐ Yes, go to 2.14, complete actions and resume at 3.1.
☒ No, go to 3.1

Comments: _____

2.14 Do the affected barriers/fire areas protect safe shutdown components or cables?

☐ Yes, go to 2.15
☐ No, go to 2.16

Comments: _____

2.15 The modification impacts Appendix R compliance. List the affected items and refer to FPER, Section 6.2.10.1. RESUME checklist completion.

Affected Items: _____

2.16 The modification could impact fire protection commitments and/or codes. List the affected item and refer to FPER, Section 6.2.10.2. RESUME checklist completion.

Affected Items: _____

3.0 FIRE PROTECTION SYSTEMS

3.1 Does the modification affect any portion of the fire protection system?

☐ Yes, go to 3.2
☒ No, go to 3.4

Comments: _____

3.2 Is the affected portion of fire protection system required for Appendix R safe shutdown compliance?

☐ Yes, go to 3.3
☐ No, go to 3.4

Comments: _____

3.3 Will the modified portion of fire protection systems meet the requirements of Appendix R as stated in the technical evaluations FPER Section 7.3?

☐ Yes, go to 3.4
☐ No, to go 3.18, complete actions and resume at 3.4.

Comments: _____

3.4 Does the modification add/delete/revise any fire protection system electrical components?

☐ Yes, go to 3.5
☒ No, go to 3.6

Comments: _____

3.5 Does the modification add/delete/revise anything that could impede the required fire protection system function?

☐ Yes, go to 3.17, complete actions and resume at 3.6.
☐ No, go to 3.6

Comments: _____

3.6 Does the modification add/delete/revise any fire detectors?

☐ Yes, go to 3.17, complete actions and resume at 3.7.
☒ No, go to 3.7

Comments: _____

3.7 Does the modification revise any ventilation system flow patterns or structural arrangements which may affect fire detection/suppression capability?

☐ Yes, go to 3.17, complete actions and resume at 3.8.
☒ No, go to 3.8

Comments: _____

3.8 Does the modification affect the annunciator system of the fire detectors?

☐ Yes, go to 3.17, complete actions and resume at 3.9.
☒ No, go to 3.9

Comments: _____

3.9 Does the modification add any new suppression systems?

☐ Yes, go to 3.10
☒ No, go to 3.11

Comments: _____

3.10 Has a suppression effects analysis been performed?

☐ Yes, go to 3.11
☐ No, go to 3.18, complete actions and resume at 3.11.

Comments: _____

3.11 Does the modification delete any suppression systems?

☐ Yes, go to 3.17, complete actions and resume at 3.12.
☒ No, go to 3.12

Comments: _____

3.12 Does the modification revise any suppression systems (e.g., changes in size, spacing; or arrangement of nozzles, piping, or pipe hangers)?

☐ Yes, go to 3.17, complete actions and resume at 3.13.
☒ No, go to 3.13

Comments: _____

3.13 Does the modification affect discharge characteristics of gaseous systems due to changes in room volume or ventilation systems?

☐ Yes, go to 3.17, complete actions and resume at 3.14.
☒ No, go to 3.14

Comments: _____

3.14 Does the design change affect the discharge of sprinklers due to structural/mechanical changes?

☐ Yes, go to 3.17, complete actions and resume at 3.15.
☒ No, go to 3.15

Comments: _____

3.15 Does the modification remove/revise any hose stations, hydrants, or fire extinguishers?

☐ Yes, go to 3.17, complete actions and resume at 3.16.
☒ No, go to 3.16

Comments: _____

3.16 Does the design change add/delete/revise any local or remote alarm actuation systems?

☐ Yes, go to 3.17, complete actions and resume at 4.1.
☒ No, go to 4.1

Comments: _____

3.17 Are the affected detection/suppression actuation system components located in a fire area/zone for Appendix R compliance?

☐ Yes, go to 3.18
☐ No, go to 3.19

Comments: _____

3.18 The modification impacts on Appendix R compliance. List the affected components and refer to FPER Section 6.2.10.1. RESUME checklist completion.

Affected Components: _____

3.19 The modification could impact fire protection commitments and/or codes. List the affected components and refer to FPER, Section 6.2.10.1. RESUME checklist completion.

Affected Components: _____

4.0 COMBUSTIBLE LOADING/FIRE HAZARD

4.1 Does the modification increase combustible loading or fire hazard due to new cable installed in cable trays?

☐ Yes, go to 4.4, complete actions and resume at 4.2.
☒ No, go to 4.2

Comments: _____

4.2 Does the modification increase combustible loading or fire hazard due to lubricating oil or grease?

☐ Yes. go to 4.4, complete actions and resume at 4.3.
☒ No, go to 4.3.

Comments: _____

4.3 Does the modification increase the combustible loading or fire hazard due to the addition of ordinary combustibles or combustible liquids?

☐ Yes, go to 4.4
☒ No, fire protection checklist complete. Sign below item 4.6 or continue Appendix R checklist at item 5.1.

Comments: _____

4.4 Does the increase affect the established level of fire hazard for the given fire area stated in the technical evaluation contained in FPER Section 7.3? NOTE: Contact WE fire protection group if input is needed.

☐ Yes, go to 4.6, complete actions and resume at 4.5.
☐ No, go to 4.5

Comments: _____

4.5 Does the increase exceed the existing fire control design capabilities of fire protection features for the given fire area? NOTE: Contact WE fire protection group if input is needed.

☐ Yes, go to 4.6, complete actions and sign fire protection checklist complete or continue Appendix R checklist at item 5.1.
☐ No, fire protection checklist complete. Sign below item 4.6 or continue Appendix R checklist at item 5.1.

Comments: _____

4.6 The modification impacts fire protection compliance. List the fire area and refer to FPER, Section 6.2.10. RESUME checklist completion.

Fire Area: _____

Conformance checklist completed in accordance with FPER Section 6.2.2.1.

By: Julie Pedroni Date: 6-3-91

5.0 SAFE SHUTDOWN COMPONENTS

5.1 Does the modification require addition of a safe shutdown component?

☐ Yes, go to 5.2
☒ No, go to 5.5

Comments: _____

5.2 Will the new component support other safe shutdown systems or component(s)?

☐ Yes, go to 5.3
☐ No, go to 5.4

Comments: _____

5.3 Are the safe shutdown system(s) or component(s) which the new component will be supporting required to operate for a fire in the fire area in which the new component will be located?

☐ Yes, go to 5.18, complete actions and resume at 5.4.
☐ No, go to 5.4

Comments: _____

5.4 Is a redundant component located either outside of the fire area or provided with Appendix R, Section III.G.2 separation?

☐ Yes, go to 5.5
☐ No, go to 5.18, complete actions and resume at 5.5.

Comments: _____

FIRE PROTECTION CONFORMANCE CHECKLIST

5.5 Does the modification require deletion of a safe shutdown component?

☐ Yes, go to 5.6
☒ No, go to 5.7

Comments: _____

5.6 Does a safe shutdown component exist that will perform the same function for which the component under consideration was required by AOP-10A and/or AOP-10B?

☐ Yes, go to 5.7
☐ No, go to 5.18, complete actions and resume at 5.7.

Comments: _____

5.7 Does the modification require revision of a safe shutdown component?

☒ Yes, go to 5.8
☐ No, go to 5.9

Comments: MR88-099 modifies the recirc line on the Aux FW Pumps.

5.8 Will the revised shutdown component continue to perform its function required by AOP-10A and AOP-10B?

☒ Yes, go to 5.9
☐ No, go to 5.18, complete actions and resume at 5.9.

Comments: _____

5.9 Does the modification add/delete/revise safe shutdown equipment to the system flow path or boundary isolation from interconnecting systems?

☐ Yes, go to 5.11
☒ No, go to 5.10

Comments: _____

5.10 Does the modification add/delete/revise safe shutdown equipment to a connection to the system flow path or boundary isolation from interconnecting systems?

☒ Yes, go to 5.11
☐ No, go to 5.13

Comments: The recirc line for AFW ties the system to the Condensate Storage Tank. The control valve which provides the boundary isolation will be changed out.

PBF-2060
(10-90)

FIRE PROTECTION CONFORMANCE CHECKLIST

5.11 Does the modification affect the operation of the system (e.g., changes in system flow rate, change in normal positions, etc.)?

☐ Yes, go to 5.12
☒ No, go to 5.13

Comments: _____

5.12 Does the modification violate the safe shutdown systems performance goals as presented in FPER Section 4.0?

☐ Yes, go to 5.18, complete actions and resume at 5.13.
☐ No, go to 5.13

Comments: _____

5.13 Does the modification affect any mechanical sub- or support components of safe shutdown components not listed on the safe shutdown equipment list (e g., SOVs, check valves, etc.)?

☒ Yes, go to 5.14
~~☒ No, go to 5.16~~

JV 6-3-91

Comments: _____

5.14 Does the modification to the sub- or support component affect the operability of its associated safe shutdown equipment?

☐ Yes, go to 5.15
☒ No, go to 5.16

Comments: The modified Aux FW Pump Recirc Line will be set to operate the same as the original recirc line under non-test conditions.

5.15 Will the safe shutdown equipment continue to perform its function required by AOP-10A and/or AOP-10B?

☐ Yes, go to 5.16
☐ No, go to 5.18, complete actions and resume at 5.16.

Comments: _____

5.16 Does the modification add/delete/revise any electrical sub- or support components which support the identified safe shutdown component(s) (e.g., power supplies, relays, switches, motor operators)?

☐ Yes, go to 5.17
☒ No, go to 6.1

Comments: _____

5.17 Do the sub- or support components impact the operability of associated safe shutdown equipment required by AOP-10A and/or AOP-10B?

☐ Yes, go to 5.18, complete actions and resume at 6.1.
☐ No, go to 6.1

Comments: _____

5.18 The addition/deletion/revision of safe shutdown components, sub- or support components affects safe shutdown. List the equipment and the affected systems and refer to FPER Section 6.2.10.1. RESUME checklist completion.

Safe Shutdown System(s), Components, Sub- or Support Component(s): _____

6.0 SAFE SHUTDOWN CABLE ASSOCIATED CIRCUITS AND SPURIOUS OPERATION

6.1 Does the modification require addition of a safe shutdown cable?

☐ Yes, go to 6.2
☒ No, go to 6.4

Comments: _____

6.2 Will the cable be routed in a fire area(s) where, if a fire is postulated, the associated safe shutdown component is required to be operable?

☐ Yes, go to 6.3
☐ No, go to 6.4

Comments: _____

6.3 Will the failure of the new cable cause the associated safe shutdown component to be inoperable?

☐ Yes, go to 6.19, complete actions and resume at 6.4.
☐ No, go to 6.4

Comments: _____

6.4 Does the modification require deletion of a safe shutdown cable?

☐ Yes, go to 6.5
☒ No, go to 6.7

Comments: _____

6.5 Will the deletion of the cable affect local and/or remote control or indication capability of the associated safe shutdown component?

☐ Yes, go to 6.6
☐ No, go to 6.7

Comments: _____

6.6 Is the affected local and/or remote control or indication capability of the associated safe shutdown component required for Appendix R safe shutdown by AOP-10A and/or AOP-10B?

☐ Yes, go to 6.19, complete actions and resume at 6.7.
☐ No, go to 6.7

Comments: _____

6.7 Does the modification require revision or rerouting of an existing safe shutdown cable?

☐ Yes, go to 6.8
☒ No, go to 6.10

Comments: _____

6.8 Does the rerouting of the cable maintain the separation of unique trains required by Appendix R to achieve safe shutdown?

☐ Yes, go to 6.9
☐ No, go to 6,19, complete actions and resume at 6.10

Comments: _____

6.9 Will the revision of the cable affect the operability of the associated safe shutdown component?

☐ Yes, go to 6.19, complete actions and resume at 6.10.
☐ No, go to 6.10

Comments: _____

6.10 Does the modification require addition or revision of a circuit connected or to be connected to safe shutdown power supply?

☐ Yes, go to 6.11
☒ No, go to 6.12

Comments: _____

6.11 Will adequate electrical coordination between the safe shutdown power supply feeder breaker and the added or revised component breaker of fuse exist?

☐ Yes, go to 6.12
☐ No, go to 6.19, complete actions and resume at 6.12.

Comments: _____

6.12 Does the modification require addition or revision of any non-safe shutdown circuits?

☐ Yes, go to 6.13
☒ No, go to 6.15

Comments: _____

6.13 Will the new or revised cables be equipped with circuit breakers, fuses or some kind of current limiting device?

☐ Yes, go to 6.15
☐ No, go to 6.14

Comments: _____

6.14 Will the new or revised cables share a common enclosure (raceway, panel, etc.) with safe shutdown cables?

☐ Yes, go to 6.19, complete actions and resume at 6.15.
☐ No, go to 6.15

Comments: _____

6.15 Does the modification add/delete/revise any safe shutdown components and/or high/low pressure interfaces which could operate spuriously?

☐ Yes, go to 6.16
☒ No, go to 6.17

Comments: _____

6.16 Could the addition/deletion/revision of the spurious safe shutdown components alter system operation and prevent the achievement of safe shutdown?

☐ Yes, go to 6 19, complete actions and resume at 6.17.
☐ No, go to 6.17

Comments: _____

6.17 Does the modification add/delete/revise the circuits of any safe shutdown equipment listed in FPER Spurious Operations Table 4.7-1?

☐ Yes, go to 6.18
☒ No, go to 7.1

Comments: _____

6.18 Will the recommended resolution for mitigating the spurious operation listed in the table remain applicable after the modification?

☐ Yes, go to 7.1
☐ No, go to 6.19, complete actions and resume at 7.1

Comments: _____

6.19 The modification impacts safe shutdown. List the safe shutdown circuits and associated components and refer to FPER Section 6.2.10.1. RESUME checklist completion.

Safe Shutdown Circuits and Components: _____

7.0 EFFECTS ON EXEMPTIONS/EVALUATIONS

7.1 Is the modification proposed to be implemented in a fire zone for which an exemption is noted in the technical evaluation in FPER Section 7.3?

☒ Yes, go to 7.6, complete actions and resume at 7.2.
☐ No, go to 7.2

Comments: _____

7.2 Does the modification add/delete/revise any safe shutdown or spurious components and/or cables?

☐ Yes, go to 7.6, complete actions and resume at 7.3.
☒ No, go to 7.3

Comments: _____

7.3 Does the modification increase the combustible loading or level of fire hazard (including intervening combustibles) in fire zone of concern?

☐ Yes, go to 7.6, complete actions and resume at 7.4
☒ No, go to 7.4

Comments: _____

7.4 Does the modification add/delete/revise a detection or suppression system in the fire zone of concern?

☐ Yes, go to 7.6, complete actions and resume at 7.5.
☒ No, go to 7.5

Comments: _____

7.5 Does the modification affect any other means of fire protection (hatches, curbs, etc.)?

☐ Yes, go to 7.6, complete actions and resume at 7.7
☒ No, go to 7.7

Comments: _____

7.6 Does the modification violate a basis for the requested exemption?

☐ Yes, go to 7.9
☒ No, RESUME Checklist Completion

Comments: _____

7.7 Are the systems, components, or cables redundant to the systems, components, or cables affected by the modification located in fire zones for which other exemptions are noted in the technical evaluations in FPER Section 7.3?

☐ Yes, go to 7.8
☒ No, go to 8.1

Comments: _____

7.8 Does the modification violate a basis for these other exemption(s) (accessibility, low combustible loading, barriers, equipment location, etc.)?

☐ Yes, go to 7.9, complete actions and resume at 8.1.
☐ No, go to 8.1

Comments: _____

7.9 The modification violates the basis for an exemption or evaluation. List the basis affected and refer to FPER Section 6.2.10.1. RESUME checklist completion.

Cables and Components: _____

8.0 EMERGENCY LIGHTING

8.1 Does the modification add/delete,revise safe shutdown component(s) for which manual operation is required by AOP-10A?

☐ Yes, go to 8.2
☒ No, go to 8.4

Comments: _____

8.2 Is emergency lighting which meets the requirements of Appendix R, Section III.J provided at the component(s) and access/egress routes thereto?

☐ Yes, go to 8.4
☐ No, go to 8.3

Comments: _____

8.3 Does the modification add emergency lighting which meets the requirements of Appendix R, Section III.J at the added component(s) and access/egress routes thereto?

☐ Yes, go to 8.4
☐ No, go to 8.11, complete action and resume at 8.4

Comments: _____

8.4 Does the modification add/delete/revise an emergency lighting system or any emergency lights?

☐ Yes, go to 8.5
☒ No, go to 8.7

Comments: _____

8.5 Is the affected portion of the emergency lighting system required for Appendix R safe hot shutdown and/or fire fighting purposes?

☐ Yes, go to 8.6
☐ No, go to 8.7

Comments: _____

8.6 Does the affected portion of emergency lighting system meet the requirements for intensity, coverage, and required battery capacity of the technical evaluation of emergency lighting capability at Point Beach Nuclear Plant, FPER Section 7.3?

☐ Yes, go to 8.7
☐ No, go to 8.11, complete action and resume at 8.7.

Comments: _____

8.7 Does the modification downgrade the ability to perform firefighting/safe shutdown activities efficiently during a blackout?

☐ Yes, go to 8.11, complete action and resume at 8.8.
☒ No, go to 8.8

Comments: _____

8.8 Does the modification involve any structural changes or equipment installations that may block the illumination path of an emergency light?

☐ Yes, go to 8.9
☒ No, go to 9.1

Comments: _____

8.9 Is the affected emergency light required for safe shutdown (e.g., required for illumination of safe shutdown component, local control station, or access/egress routes thereto)?

☐ Yes, go to 8.10
☐ No, go to 9.1

Comments: _____

8.10 Does the affected emergency light still meet the requirements of the technical evaluation of emergency lighting capability at Point Beach Nuclear Plant, FPER Section 7.3?

☐ Yes, go to 9.1
☐ No, go to 8.11, complete action and resume at 9.1.

Comments: _____

8.11 The modification impacts on Appendix R safe shutdown compliance. List the affected position of emergency lighting system and refer to FPER Section 6.2.10.1. RESUME checklist completion.

Emergency Lighting System: _____

9.0 PLANT COMMUNICATIONS

9.1 Does the modification add/delete/revise plant communication systems?

☐ Yes, go to 9.2
☒ No, go to 9.4

Comments: _____

9.2 Is the affected portion of plant communication system require for Appendix R safe shutdown and/or fire fighting purposes?

☐ Yes, go to 9.3
☐ No, go to 9.4

Comments: _____

9.3 Does the modification add/delete/revise anything (e.g., antenna system, repeaters, power supplies, etc.) that could impede plant communications including radio transmission or reception?

☐ Yes, go to 9.6, complete action and resume at 9.4.
☐ No, go to 9.4

Comments: _____

9.4 Does the modification involve any structural changes that may impede radio transmission, reception, or other communication means?

☐ Yes, go to 9.5
☒ No, go to 10.1

Comments: _____

9.5 Will the affected communication system still perform its function?

☐ Yes, go to 10.1
☐ No, go to 9.6, complete actions and resume at 10.1.

Comments: _____

9.6 The modification impacts on safe shutdown. List the affected portion of plant communication system and refer to FPER Section 6.2.10.1. RESUME checklist completion.

Plant Communication System: _____

10.0 REACTOR COOLANT PUMP OIL COLLECTION SYSTEM

10.1 Does the modification affect any portion of the RCP oil collection system?

☐ Yes, go to 10.2
☒ No, Sign checklist complete below item 10.5.

Comments: _____

10.2 Does the modification affect the quantity of oil in the reactor coolant pumps?

☐ Yes, go to 10.5, complete actions and resume at 10.3.
☐ No, go to 10.3

Comments: _____

10.3 Does the modification affect the seismic design of the RCP oil collection system?

☐ Yes, go to 10.5, complete actions and resume at 10.4.
☐ No, go to 10.4

Comments: _____

10.4 Does the modification require the temporary removal of the RCP oil collection system during unit operation?

☐ Yes, go to 10.5, complete actions and sign checklist complete.
☐ No, sign checklist complete below item 10.5.

Comments: _____

10.5 The modification impacts on safe shutdown compliance. List the components of the affected portion of the RCP lube oil collection system and refer to FPER Section 6.2.10.1. RESUME checklist completion.

Components: _____

Conformance checklist completed in accordance with FPER Section 6.2.2.2.

By: Julie Pedersen Date: 6-3-91

PBF-2060
(10-90)

POINT BEACH NUCLEAR PLANT MODIFICATION REQUEST	MR NUMBER 88-099*C	Page 1 of 6

2.27

DOCUMENTATION UPDATE SHEET AND CLOSEOUT CHECKLIST

N/A	Required For Acceptance (Completion)	Required For Closeout (Submittal)		Sign for Acceptance/ Closeout Requirements
			A. TRAINING	
✓			1. Pre-acceptance training; describe or specify lesson plan(s).	
		✓	2. Post-acceptance training; describe or specify course of lesson plan(s).	TNA 91-058 PSU 91-04 [signature]
			B. FINAL DESIGN ORGANIZATION	
			1. Drawings/Procedures	
	✓	M-217	a. Logics, P&IDs, 499 series elementaries, MDB, Control Room drawings updated; specify drawing number(s).	[signature] 11/6/91
		✓ M-217-#92-0173 P-DRAWINGS #92-0179 - P-103 P-303-#92-0182 #92-0180 P-159 P-359-#92-0183 E-101-#92-0155	b. DCNs - to quality engineer; specify drawing number(s) and/or DCN number with number of sheet(s).	Submitted [signature] 1/24/92
		✓ SUPPORT DRAWINGS D838-2001✓ D838-2002✓ JG4BA-2001✓ JG4BA-2002✓	c. New Drawings - to supervisor - Staff Services; specify drawing number(s).	[signature] 1/24/92
			d. Drawings Voided - to supervisor - Staff Services; specify drawing number(s).	
		✓ SEE ATTACHED LIST.	2. Purchase orders - (also contract numbers); specify numbers.	[signature]
✓			3. Specifications - list to supervisor - Staff Services; specify number(s).	
		✓ FOR CONTROL VLV CC003 CVULC FOR V-01152 ROSEMOUNT 00325 VIA DP.*B	4. Component Instruction Manuals (for issue, revision, deletion) - to supervisor - Staff Services; specify manual/instruction number(s) and vendor(s).	SUBMITTED [signature] 1/24/92

2.27

DOCUMENTATION UPDATE SHEET AND CLOSEOUT CHECKLIST

N/A	Required For Acceptance (Completion)	Required For Closeout (Submittal)			Sign for Acceptance/ Closeout Requirements
		✓		5. Cable and raceway schedule revisions - to supt. - Nuclear Systems Engineering, NSEAS.	Submitted 1/24/92
✓				6. EQ Master List revisions - to Supt. - Nuclear Safety Analysis, NSEAS.	
✓				7. FPER revisions - to gen. supt.; NSEAS.	
		✓	N-90-028 N-90-095 N-91-007 N-91-031 N-91-032	8. Calculations added/~~deleted~~ to file.	
✓				9. Calculation file reviewed for updating because of modification.	
✓				10. FSAR - change; specify section(s) affected.	
✓				11. Technical Specification - change; specify section(s) affected and change request number if known.	
✓				12. Emergency Plan and EPIPs - change; specify section(s) affected.	
✓				13. Report major changes to radwaste treatment systems with annual FSAR update per PBNP Tech Spec 15.7.8.5.	
✓				14. NPRDS Update - report MR changes to the NPRDS coordinator.	
✓				15. Industrial Safety Review Committee Review - specify minutes.	
✓				16. ALARA Review - specify minutes or review document.	

2.27

DOCUMENTATION UPDATE SHEET AND CLOSEOUT CHECKLIST

N/A	Required For Acceptance (Completion)	Required For Closeout (Submittal)		Sign for Acceptance/ Closeout Requirements
✓			17. Report major changes to the containment aluminum inventory list with FSAR update.	
		✓	18. Other: ECRs: PB-91-067, PB-91-082	JDM 11/11/91
			C. CHAMPS DATABASE	
		✓	1. Equipment Identification - additions assigned from CHAMPS/Detetions; list description and number(s).	2FC-4049, 2FC-4049, TB-143 SUBMITTED JDM 1/29/92
	✓ DONE JDM 11/11/91 EXISTING LABELS WILL BE RE-HANG	✓ NEW LABLE FOR FLOW ORIFICE, TB, FQ. FIT	2. Permanent labeling - labels on new equipment.	SUBMITTED JDM 1/24/9
✓			3. Equipment Record - Update to CHAMPS coordinator specify change(s).	
		✓ AF-114 ~~AF-15~~ AF-53 ~~AF-~~	4. Equipment History - change/update to CHAMPS coordinator. List equipment number(s).	SUBMITTED JDM 1/24/
		✓	5. Spare parts stocking and scrapping inputs into CHAMPS.	DONE PER D.P.* JDM
		✓	6. Unused material removed from modification bin.	REQUEST SUBMITTED JDM 2/3/92
			7.	
			D. OPERATIONS	
✓			1. Abnormal operating, normal operating, and refueling procedures - change; specify section(s) affected.	

2.27

DOCUMENTATION UPDATE SHEET AND CLOSEOUT CHECKLIST

N/A	Required For Acceptance (Completion)	Required For Closeout (Submittal)			Sign for Acceptance/ Closeout Requirements
✓				2. Operating Instructions and checklists - change; specify section(s) affected.	
✓				3. Alarm response and RMS alarm setpoint and response books - change; specify section(s) affected.	
	✓	✓	IT-09 -09A -295 -295A	4. Testing - TS, IT, ORT, other - change; specify test(s) affected.	REVISIONS DONE PER T. Gallot [illegible] 11/11/91
✓				5. EOPs, ECAs, CSPs - change; specify section(s) affected.	
✓				6. Periodic callups - change: specify section(s) affected.	
✓				7. "Programs" - change: specify program and section affected.	
✓				8. Fire protection procedure - specify section(s) affected.	
				9. Other	
				E. MAINTENANCE	
✓ [illegible]		MI 5.2 CHANGE SUBMITTED 11/88-099*B. ✓		1. Maintenance procedures/ instructions - change; specify section(s) affected.	[illegible]
✓		✓ [illegible]		2. Preventative maintenance - ~~initiate~~/revise CHAMPS callups.	
				3. Other	

2.27

DOCUMENTATION UPDATE SHEET AND CLOSEOUT CHECKLIST

N/A	Required For Acceptance (Completion)	Required For Closeout (Submittal)		Sign for Acceptance/ Closeout Requirements
			F. INSTRUMENTATION AND CONTROL	
		✓	1. ICPs - change; specify procedure(s) affected. 13.8 App. A	INITIATED BY LSC JDM 4/4/91
	✓		2. Setpoint Document - change; specify section(s) affected. 14.11	JDM 4/4/91
✓			3. Preventive maintenance - initiate/revise CHAMPS callups.	
			4. Other	
			G. SECURITY	
✓			1. Security Procedures - change; specify section(s) affected.	
✓			2. Security Plan - update as required.	
			3. Other	
			H. INSERVICE INSPECTION	
✓			1. ISI program updated.	
✓			2. Miscellaneous HX ECT/Cleaning program updated.	
			3. Other	

2.27

DOCUMENTATION UPDATE SHEET AND CLOSEOUT CHECKLIST

N/A	Required For Acceptance (Completion)	Required For Closeout (Submittal)		Sign for Acceptance/ Closeout Requirements
			I. TECHNICAL SERVICES	
✓			1. Reactor Engineering Instructions - change; specify section(s) affected.	
✓			2. Reactor Engineering refueling procedures - change; specify section(s) affected.	
✓			3. Refueling procedures - change; specify section(s) affected.	
✓			4. Software control - specify system affected and software change request number.	
✓			5. Other	
			J. OTHER (CHEM., HP, ETC.)	
			1.	
			2.	

PURCHASE ORDERS

#	DECSCRIPTION
185010	FLOW ORIFICE PLATES & FLANGES (DANIELS)
189340	CS 3x2 SOCK-O-LETS
183698	RELIEF VALVE (CROSBY)
183687	CONTROL VALVES (PSI)
184161	FLOW TRANSMITTERS (ROSEMOUNT) & MANIFOLDS
184514	FLOW RESTRICTING ORIFICES FOR P-38A&B
181528	TRANSMITTER POWER SUPPLIES (ROSEMOUNT)
183706	FLOW RESTRICTING ORIFICES FOR 1(2)-P29
195913	MANUAL GLOBE VALVES (CONVAL), SS
189255	HANDWHEEL CONVERSION KITS FOR CONTROL VLVS (CVULC)
186317	SWAGELOK FITTINGS
185009	MANUAL GLOBE VLVS, CS, (NEWCO)
160141	ENCLOSURES
184859	PIPE & FITINGS
185036	PIPE & 4x2 SOCKOLETS (QA)
189332	SPRINGS FOR CONTROL VLVS (CVULC)

CONTRACTS

168644	PHILLIPS/GETSCHOW	COMM.: u1: FF010446; AA018091; u2: FF019419
168789	PIEPER	(FJO FF018065) u2; (FF013513) u1

F L O - M A X, I N C.
P. O. BOX 5187
KINGWOOD, TX 77325
(713) 987-8631 (800) 426-9156 FAX (713) 987-2930

FLOCURVE (tm) Program 5200.03
FLOW VERSUS DIFFERENTIAL PRESSURE

CUSTOMER---------- SERVICE METAL PRODUCTS
CUSTOMER ORDER------ 803080H ADD 1
SHOP ORDER---------- 910808
DATE---------------- 04/25/91
TAG----------------
FLUID--------------- WATER
ELEMENT------------- ORIFICE PLATE
PIPE ID------------- *********1.9390 INCHES
BORE---------------- *********1.5206 INCHES
MAX FLOW------------ *******120.0000 GPM
MAX DIFF------------ *******133.0000 IN WC

FLOW GPM	%	DIFF IN WC	FLOW GPM	%	DIFF IN WC	FLOW GPM	%	DIFF IN WC
120.0000	100	133.0000	82.8000	69	63.3213	45.6000	38	19.2052
118.8000	99	130.3533	81.6000	68	61.4992	44.4000	37	18.2077
117.6000	98	127.7332	80.4000	67	59.7037	43.2000	36	17.2368
116.4000	97	125.1397	79.2000	66	57.9348	42.0000	35	16.2925
115.2000	96	122.5728	78.0000	65	56.1925	40.8000	34	15.3748
114.0000	95	120.0325	76.8000	64	54.4768	39.6000	33	14.4837
112.8000	94	117.5188	75.6000	63	52.7877	38.4000	32	13.6192
111.6000	93	115.0317	74.4000	62	51.1252	37.2000	31	12.7813
110.4000	92	112.5712	73.2000	61	49.4893	36.0000	30	11.9700
109.2000	91	110.1373	72.0000	60	47.8800	34.8000	29	11.1853
108.0000	90	107.7300	70.8000	59	46.2973	33.6000	28	10.4272
106.8000	89	105.3493	69.6000	58	44.7412	32.4000	27	9.6957
105.6000	88	102.9952	68.4000	57	43.2117	31.2000	26	8.9908
104.4000	87	100.6677	67.2000	56	41.7088	30.0000	25	8.3125
103.2000	86	98.3668	66.0000	55	40.2325	28.8000	24	7.6608
102.0000	85	96.0925	64.8000	54	38.7828	27.6000	23	7.0357
100.8000	84	93.8448	63.6000	53	37.3597	26.4000	22	6.4372
99.6000	83	91.6237	62.4000	52	35.9632	25.2000	21	5.8653
98.4000	82	89.4292	61.2000	51	34.5933	24.0000	20	5.3200
97.2000	81	87.2613	60.0000	50	33.2500	22.8000	19	4.8013
96.0000	80	85.1200	58.8000	49	31.9333	21.6000	18	4.3092
94.8000	79	83.0053	57.6000	48	30.6432	20.4000	17	3.8437
93.6000	78	80.9172	56.4000	47	29.3797	19.2000	16	3.4048
92.4000	77	78.8557	55.2000	46	28.1428	18.0000	15	2.9925
91.2000	76	76.8208	54.0000	45	26.9325	16.8000	14	2.6068
90.0000	75	74.8125	52.8000	44	25.7488	15.6000	13	2.2477
88.8000	74	72.8308	51.6000	43	24.5917	14.4000	12	1.9152
87.6000	73	70.8757	50.4000	42	23.4612	13.2000	11	1.6093
86.4000	72	68.9472	49.2000	41	22.3573	12.0000	10	1.3300
85.2000	71	67.0453	48.0000	40	21.2800	10.8000	9	1.0773
84.0000	70	65.1700	46.8000	39	20.2293	9.6000	8	0.8512

FLOCURVE is a trademark of MTS Software, St. Louis, MO.

ROSEMOUNT® Measurement Control Analytical Valves

Rosemount Inc.
2145 Spencer Village
Appleton, WI 54914 U S A
Tel (414) 731-8757
Fax (414) 731-0159

Wisconsin Electric Power Co.
P.O. Box 2046
Milwaukee, Wisconsin 53201-2046

Attention: David Kubacki
414/221-2651

FEB 21 1991

CUSTOMER REFERENCE: FRQ No: RF006744
QUOTE DATE: 2/18/91
QUOTE NUMBER: 205A
DUE DATE: 2/18/91
TERMS: 1% 15, Net 30 Days
FIRM QUOTE FOR 60 DAYS
PRICES ARE F.O.B. OUR PLANT - FREIGHT PREPAID AND ADD

ITEM	QTY	DESCRIPTION	UNIT PRICE	TOTAL
1	4	Differential Pressure Transmitter Model: 1151DP4S22B1M4 4 = Range: 0-25 to 0-150" W.C. S = Output: 4-20 mA Smart Electronics 22 = Materials of Construction Flanges & Adapters: 316 SST Drain/Vent Valves: 316 SST Isolating Diaphragms: 316L SST Fill Fluid: Silicone M4 = Linear LCD Meter, 0-100% B1 = Mounting Bracket for mounting to 2" pipe	$1300.00	$5200.00
1A	4	Three-Valve Manifold Model: 01151-150-2 Anderson, Greenwood and Co., M4AVS	$235.00	$940.00
			Total:	$6140.00

Delivery: 8 Weeks A.R.O.

* The Terms and Conditions governing this quotation shall be Rosemount's Standard Terms and Conditions as printed on the reverse side of this quotation.
* Please specify our quote number when ordering.
* If you have any questions, please contact me at (414)731-8757.

Ted P. Hinderman
Sr. Sales Engineer

Ref: D:\DW4\A:205A

ORIFICE FLANGES Conforming to A.G.A. Recommendations ASTM A182

Raised Face and Ring Joint
Welding Neck, Slip-on and Threaded

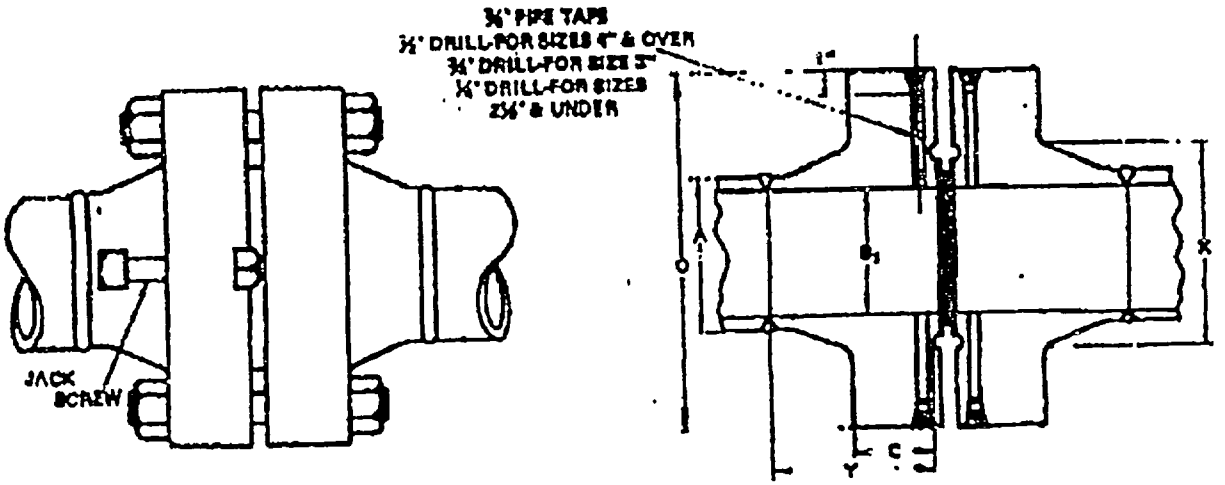

900Lb For sizes 2 1/2" and smaller, see 1500 lbs. Standard

Nom. Pipe Size	COMMON DIMENSIONS: Outside Diam. O	O.D. of Raised Face R	Diam. at Base of Hub X	Thickness Minimum C: Raised Face	Thickness Minimum C: Ring Joint	BORE: Welding Neck B_1	BORE: Slip-On B_1	LENGTH THRU HUB Y: Welding Neck: Raised Face	Welding Neck: Ring Joint	Slip-On and Threaded: Raised Face	Slip-On and Threaded: Ring Joint	Diam. Hub at Bevel A	Face to Hub Counterbore F
2	9 5/8	6	5	1 1/8	1 1/8	To be specified by customer	3.57	4	4	2 1/8	2 1/8	3.50	1 1/8
4	11 1/2	6 5/8	6 1/4	1 5/8	1 5/8		4.57	4 1/8	4 1/8	2 3/4	2 3/4	4.50	2 1/8
6	13 3/4	7 5/8	7 1/8	2	2		6.06	6	5	3 1/8	3 1/8	5.56	2 5/8
8	16	8 1/2	9 1/4	2 3/8	2 3/8		6.72	8 1/8	8 1/8	3 5/8	3 5/8	6.63	2 1/2
	18 1/4	10 5/8	11 3/8	2 1/2	2 1/2		8.72	6 5/8	6 5/8	4	4	8.63	2 5/8
10	21 1/2	12 3/4	14 1/2	2 3/4	2 3/4		10.88	7 1/2	7 1/8	4 1/2	4 1/2	10.75	2 3/4
12	24	15	16 1/2	3 1/8	3 1/8		12.88	7 1/8	7 1/8	4 3/4	4 3/4	12.75	3 1/8

1500Lb 2500 lb. Orifice Flanges are also available.

Nom. Pipe Size	COMMON DIMENSIONS: Outside Diam. O	O.D. of Raised Face R	Diam. at Base of Hub X	Thickness Minimum C: Raised Face	Thickness Minimum C: Ring Joint	BORE: Welding Neck B_1	BORE: Slip-On B_1	LENGTH THRU HUB Y: Welding Neck: Raised Face	Welding Neck: Ring Joint	Slip-On and Threaded: Raised Face	Slip-On and Threaded: Ring Joint	Diam. Hub at Bevel A	Face to Hub Counterbore F
1	5 1/8	2	2 1/8	1 1/8	1 1/8	To be specified by customer	1.36	3 1/8	3	1 1/8	1 1/4	1.37	1 1/8
1 1/4	6 1/4	2 1/2	2 1/2	1 1/8	1 1/8		1.70	3 1/8	3	1 1/8	1 1/4	1.60	1 1/8
1 1/2	7	2 7/8	2 7/8	1 1/8	1 1/8		1.99	3 5/8	3 1/8	1 3/8	1 3/4	1.90	1 1/8
2	6 1/2	3 5/8	4 1/8	1 1/8	1 1/8		2.44	4	4	2 1/8	2 1/4	2.38	1 3/8
2 1/2	8 1/2	4 1/4	4 5/8	1 1/8	1 1/8		2.94	4 1/8	4 1/8	2 1/2	2 1/2	2.88	2 1/8
3	10 1/2	5	5 1/8	1 1/8	1 1/8		3.57	4 5/8	4 5/8	2 3/4	2 7/8	3.50	2 1/4
4	12 1/2	6 3/8	6 3/8	2 1/8	2 1/8		4.57	4 7/8	4 3/4	3 1/4	3 1/8	4.50	2 1/2
6	14 3/4	7 5/8	7 3/4	2 1/8	2 1/8		6.66	6 1/8	6 1/8	4 1/8	4 1/8	5.56	2 3/8
8	15 1/2	8 1/2	9	2 1/8	2 1/8		8.72	8 1/2	8 5/8	4 3/4	4 3/4	6.63	3
8	19	10 3/8	11 1/2	3 1/8	3 1/8		8.72	8 1/8	8 1/8	5 3/8	5 3/8	8.63	3 1/4
10	23	12 3/4	14 1/2	4 1/8	4 1/8		10.88	10	10	6 1/8	6 1/8	10.75	3 1/8
12	26 1/2	15	17 1/2	4 1/8	4 1/8		12.88	11 1/8	11 1/8	7 1/8	7 1/8	12.75	3 1/8

INTERNAL CORRESPONDENCE

NPM 91-0241

TO: [redacted]

FROM: R. Bosnjak

DATE: February 2, 1991

SUBJECT: PRE-AWARD INSPECTION AT POWER EQUIPMENT SUPPLY COMPANY NEW WASHINGTON, INDIANA

COPY TO: J. E. Anthony
R. E. Heiden
D. B. Robinson

File Q1.3.1 - Power Equipment Supply

On January 28, 1991, I visited Power Equipment Supply Company in New Washington, Indiana. Power Equipment is affiliated with Public Service of Indiana (PSI). This was their Marble Hill facility. The visit was to perform a pre-award source inspection of four two-inch globe valves which we intend to purchase if everything is in order. The Globe valves were unused and were in PSI's storage warehouse since purchase. The records reflect that the valves were manufactured by Copes Vulcan and purchased by Westinghouse before delivery to Marble Hill. Three of the valves were manufactured in June 1977 and the last one was in September of 1979. The valves were displayed on pallets and stored on such since receipt. I reviewed all the necessary documentation and confirmed that these were acceptable for our purchase. The only document concern which I had was the legibility of some of the documents. They were obviously copies of copies and some were faint and may be hard for us to reproduce or microfilm as permanent records. Each valve was found to be of the same configuration as presented to you in the letter dated January 11, 1991 from PSI. All valves are 1500 lb., ASME Section III Class I, air operated of Copes Vulcan design #2IA88RG. The air operator is a type D-100 as described on Copes drawing D166085. All valves were produced to Westinghouse specification #E678844. The weld prep is a socket weld design.

The valves received very little maintenance while in storage. I reviewed the storage and maintenance record for the valve and it reflected only damage, seal, and end cap verification for the most part. The instruction form #SMI-Y-2702-027 has been provided for your review. In addition, I obtained a copy

of the instruction manual for the D-100 air operators which is also enclosed. The maintenance program reflected in the manual requires yearly inspections of stem-packing (under normal operating conditions) and diaphragm deterioration. The rubber diaphragm requires no loss of elasticity or observance of drying and cracking. You indicated that you have anticipated our maintenance personnel will replace both the packing and diaphragm so that this was not a concern. No other items needed to be addressed by shelf life.

The valve's appearance was good with the exception of light rust observed on the bonnet nuts and various locations on the air operator housing and cover. As we discussed, I suggested you contact PBNP maintenance and see if they would like PSI to clean and prime these areas or leave that to them. PSI doesn't have any Westinghouse "blue" finish paint so priming is all they could do for us. This may delay delivery a few days if that is of concern. One of the valves had a solenoid operator stop arm that was jammed under the solenoid switch arm. This occurred on S/N 7620-95375-248-2 and was corrected in my presence.

The delivery of the valve could otherwise be expected within five days after PSI received a hard copy of the purchase order. They said they could get the valves out the same day but normal truck freight would be around five days. PSI will accept 10CFR21 as a requirement on the order. Also, formally request a copy of the data packages as presented to me with a Certificate of Conformance (CoC) signed by PSI. The data package I received during my visit had a preliminary CoC, but was unsigned. Also, include a request for the operator instruction manual.

If you have any questions, please call me at 221-2812.

Rob Bourjale

mef

Wisconsin Electric POWER COMPANY

231 W Michigan PO Box 2046 Milwaukee WI 53201

SOURCE INSPECTION PLAN
QUALITY ASSURANCE SECTION

COMPANY	LOCATION	NO. OF PAGES
Power Equipment Supply, Co.	New Washington, Indiana	1

MATERIAL DESCRIPTION	P.O. NUMBER
Valve, 2", Globe, 1500#, Stainless Steel, Air Operated, Copes Vulcan, Socket welded	Pre-award

REFERENCE DOCUMENTS (SPEC., DWG, STDS., ETC.)
PSI Letter dated 1/11/91, Copes Vulcan Drawing #D-166085
Westinghouse Spec. Sheet #E678844 ASME Form NPV-1 dated 6/24/77

Is this Source Inspection required for acceptance of a Commercial Grade Item? ☐ Yes ☒ No

ITEM #	ITEM DESCRIPTION
1.	Is the Quality Program in accordance to 10CFR50 Appendix B? Is Part 21 reportability being maintained for the valve and is it transferable?
2.	What is the appearance of the valve? Is there any damage? Is the valve complete with air operator, bolts, nuts, gaskets and packing?
3.	Are the valve configuration and dimensional characteristics as shown on Copes Vulcan #D-166085 Drawing?
4.	Have the weld preps, finished hard facing and any bearing surfaces received penetrant inspection?
5.	Was a hydro test performed at 1.5 times the design pressure (3727 psi)?
6.	Were all CMTR's for the valve in order? Are there any material differences between the valves?
7.	Is all documentation available for shipment? What is the delivery date?

Prepared by	Date	Approved for Use	Date
Rod Bourque	1/22/91	Richard Heath	1/24/91

Form QAI 7 8-1
Rev 1

Wisconsin Electric POWER COMPANY

SOURCE INSPECTION REPORT
QUALITY ASSURANCE SECTION

231 W Michigan PO Box 2046 Milwaukee, WI 53201

COMPANY	LOCATION	PAGE 1 OF 6
Power Equipment Supply Co.	New Washington, Indiana	
MATERIAL DESCRIPTION Valve, 2", Globe, 1500#, Stainless Steel, Air Operated, Copes Vulcan, Socket Welded		P.O. NUMBER Pre-award

ITEM #	VERIFICATION ACTIVITIES/RESULTS
	Personnel Contacted:
1	Power Equipment Supply Co. has a QA manual revision 0 dated 11/1/90. The manual is reviewed by R.P. Minich who was copy #003 issued to R.P. Minich who is the QA manager. The manual was approved by M.A. Minsing VP/General manager. The manual was based on 10CFR50 Appendix B. Power Equipment Supply will accept 10CFR21 as part of the order.
2	The valves are complete with air operator and accessories. Overall the valve appearance was good with the exception of light rust conditions. It noted rust in both the bonnet nuts and various locations on the operator housing and cover. Paint has chipped of these locations and rust has started to form. One solenoid operator stop arm was jammed against a solenoid switch lever. The stop arm was bent back and correctly set in my presence. This occurred

INSPECTED BY	DATE:	EQUIPMENT RELEASED FOR SHIPMENT?
Rod Boonjoh	1/28/91	YES ___ NO ___ N/A X

Attachments (pp) _____

Form QAI 7.8-
Rev. 1

Wisconsin Electric POWER COMPANY

231 W Michigan, PO Box 2046 Milwaukee, WI 53201

SOURCE INSPECTION REPORT CONTINUATION SHEET

COMPANY	LOCATION	PAGE 2 OF 6
MATERIAL DESCRIPTION: see page 1		P.O. NUMBER

ITEM #	VERIFICATION ACTIVITIES/RESULTS
2 continued	on S/N 7620-95375-248-2. All valves were end capped and taped except one. This valve had the tape missing. All would be retaped for shipment. The valve storage and maintenance is controlled by PSI procedure #5-2 Rev 3 dated 8/30/88. The generation of a instruction document form # LF 61-211 describes the requirements for the valve while in stores. A copy of this instruction was provided. Little if anything is required for the valve. A visual inspection for damage, seal, and end capping was just about all. A copy of the air operator instruction manual provided a yearly requirement for examination of the stem packing (under normal operating conditions) and diaphragm deterioration. The loss of elasticity along with a drying or cracking condition is unacceptable and indicates that replacement of the rubber diaphragm is necessary. The PBNP maintenance group will be replacing the diaphragm and packing for all of these valves. It will be still determined if the rust condition will be repaired by PSI or PBNP. PSI doesn't have any Westinghouse

Form QA: 7 8-
Rev 1

Wisconsin Electric POWER COMPANY

231 W Michigan, PO Box 2046 Milwaukee, WI 53201

SOURCE INSPECTION REPORT CONTINUATION SHEET

COMPANY	LOCATION	PAGE 3 OF 6
MATERIAL DESCRIPTION see page 1		P.O. NUMBER

ITEM #	VERIFICATION ACTIVITIES/RESULTS
2 continued	"Blue" finish paint so only primer can be applied if necessary. Julie Pederson will discuss with PBNP maintenance to determine what they would prefer.
3.	The valves were examined for proper match to Copes Vulcan drawing # D-166085. The valves were socket weld design with Copes Vulcan D-100 air operator installed. Each was properly code tagged and the inlet was vibro-tool marked on the valve body, & verified dimensional characteristics per the drawing and found no conditions of concern. The body effective length is 11½ inches with a 2.408 pipe diameter opening. Overall the valve is 42 3/4 inches high from the center line of the piping to the top of the operator cover. Operator cover was 18 inches in diameter.

Form QAI 7.
Rev. 1

Wisconsin Electric POWER COMPANY

231 W Michigan, PO Box 2046 Milwaukee, WI 53201

SOURCE INSPECTION REPORT CONTINUATION SHEET

COMPANY	LOCATION	PAGE 4 OF 6
MATERIAL DESCRIPTION: see page 1		P.O. NUMBER

ITEM #	VERIFICATION ACTIVITIES/RESULTS
4	a review of the data package revealed liquid penetrant was performed on all vital components. Reports for the body, bonnet, plug, stem, studs and nuts received NDE examination. Dye penetrant inspection was performed per procedure # 50-59.12 except the studs and nuts which were fluorescent penetrant inspected per procedure #2.
5	all valves including body and bonnet were hydro tested, the test pressure was 5445 PSIG with water and held for 30 minutes. This was confirmed on each Copes Vulcan form # 775235 and the NPV-1 manufacturers data report which is a ASME report form. The NPV-1 form were signed by an ANI board # 5900 on either 6/8/77 or 6/21/77.

Form QAI 7.8-4
Rev. 1

Wisconsin Electric POWER COMPANY

231 W Michigan, PO Box 2046, Milwaukee, WI 53201

SOURCE INSPECTION REPORT CONTINUATION SHEET

COMPANY	LOCATION	PAGE 5 OF 6
MATERIAL DESCRIPTION: see page 1		P.O. NUMBER

ITEM #	VERIFICATION ACTIVITIES/RESULTS
6	All CMTR's were supplied for the necessary components of the valve. The package lists the material heat numbers and serial numbers for body, bonnet, plug, stem, studs and nuts. The heat numbers for body, bonnet, stem and nuts are the same for each valve. Only valve S/N 7620-95376-248-2 has different heat lots for the plug and studs. The remaining three valves have identical heat lots for the stud and plug material. All material is ASME certified. A comparison to drawing D-166085 reflect the ASME standards are as required. Body SA-182, F316 Bonnet SA-182, F316 Plug SA-564, 630 Studs SA 453, 660 Nuts SA 194, 6

Form QAI 7.8-
Rev. 1

Wisconsin Electric POWER COMPANY

231 W Michigan, PO Box 2046 Milwaukee WI 53201

SOURCE INSPECTION REPORT CONTINUATION SHEET

COMPANY	LOCATION	PAGE 6 OF 6
MATERIAL DESCRIPTION: see page 1		P.O. NUMBER

ITEM #	VERIFICATION ACTIVITIES/RESULTS
7	A document package containing a CoC form from PSI along with Westinghouse QC reports and Copes Vulcan records was provided. Included are CMTR's, dimensional / NDE reports, hydro test results, ASME NPV-1 form, a Copes Vulcan CoC, and heat treat data. Also supplied was a copy of the Copes Vulcan air operator instruction manual and PSI storage/maintenance instruction. The delivery of the valves is expected to take five days from the receipt of a hard copy of the purchase order. The shipping will take all of this time. The valves can be released from Marble Hill the same day as the order is received. Depending on what is determined by the rust removal/primer application this may need to be extended. PSI was told to prepare the valves for shipment at this point. They would create boxes for the valves and retape / cap the valve ends and wait for instructions from Julie Pederson on the rust and primer condition.

Form QAI 7.8-
Rev. 1

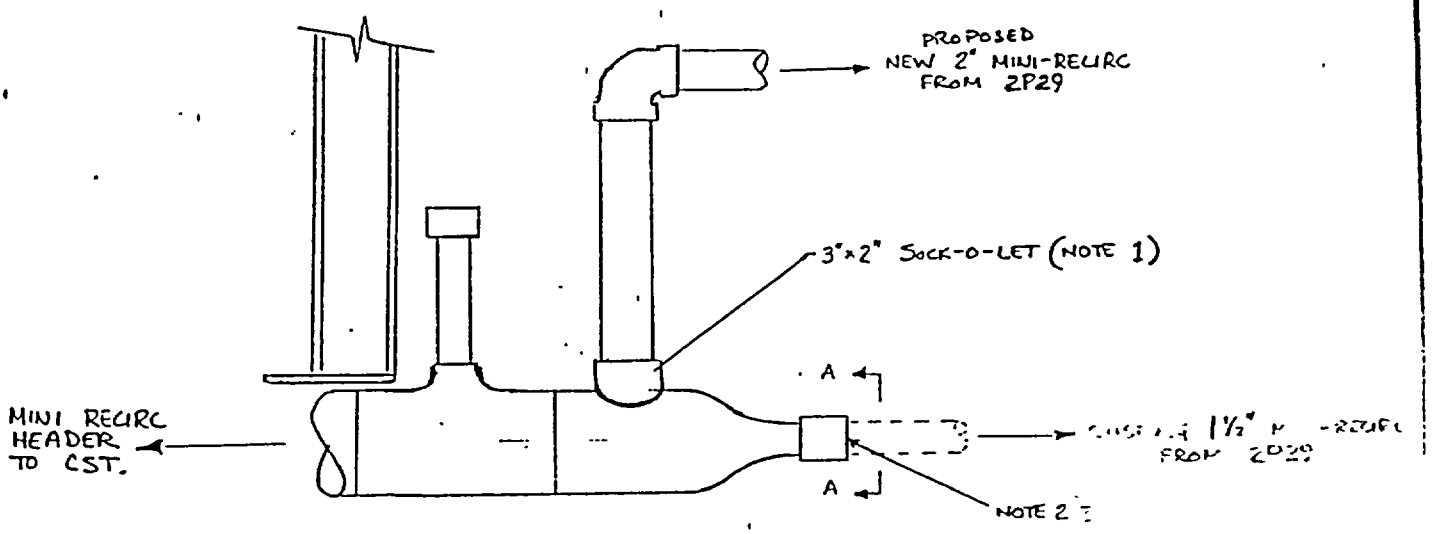

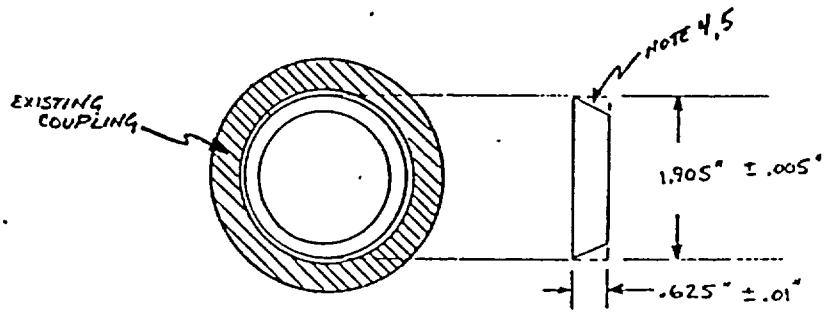

DETAIL A-A

NOTES:

1. A 4"x2" SOCK-O-LET WILL BE RE-CONTURED TO FIT THE 3" HEADER.
2. CUT EXISTING 1½" PIPE AT THE WELD ON THE COUPLING.
3. A PLUG WILL BE MADE (SEE DETAIL A-A), INSERTED IN SOCKET ON COUPLING, AND SEAL WELDED IN PLACE.
4. EDGE OF PLUG WILL BE BEVELED IN THE FIELD, AS NECESSARY.
5. PLUG TO BE MADE OUT OF 2" ROUND ROD, SS TP. 304L, LOT # 902-8587.

FOR INFORMATION ONLY

PROJ IDENT. MR 88-099 * C

MICROFORM NO	Wisconsin Electric	TITLE
		2P29 MINI-RECIRC DETAILS.

DRAWN	DATE 9/26/91	APPROVD	DATE 10/3/91	A	S,K,-	A,F,W	-	0,1,7	/ 8,8	-	0,9	9,C
CHECKED	10/2/91	APPRVD.										
DRAFTG.		APPRVD		SCALE NTS				RELEASE DATE				

TELEDYNE POST N16779

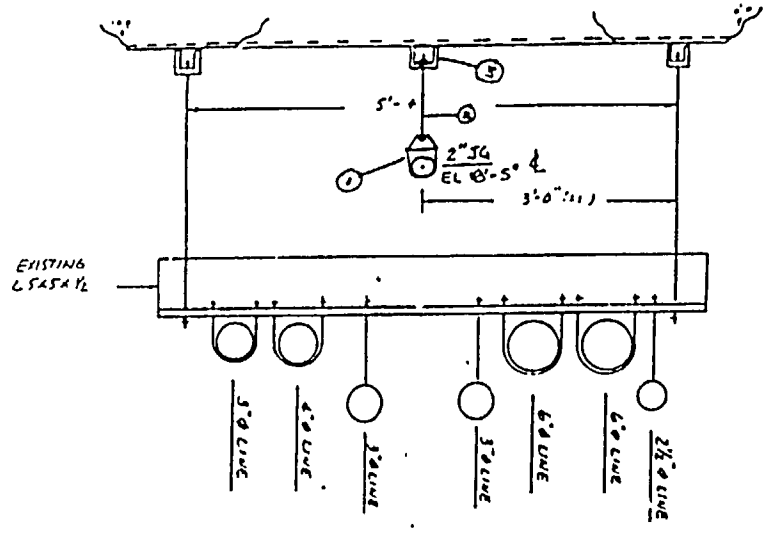

ELEVATION LOOKING NORTH

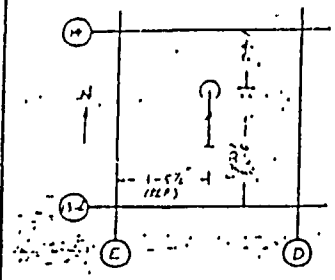

ITEM	QTY.	FIG. NO. / PART NO. / CALC. NO.	BILL OF MATERIAL — DESCRIPTION	WT. (LB.)
1	1	140	3/8" Ø THREADED ROD (LENGTH AT FIELD)	
2	1	260	ADJUSTABLE CLEVIS FOR 2" Ø PIPE	
3	1		WELDED BEAM ATTACHMENT (66)	
			TOTAL WT.	

FILE NO.

NODE POINT: 2620

RATINGS (LB.): A OR B | C

SPECIAL INSTRUCTIONS: NEW SUPPORT ADDED TO EXISTING 5" PIPE 1M2-1115

SUPPORT RATING

FOR INFORMATION ONLY

ACC. NO. 1000705
REV. 01
PAGE 12

TECHNICAL FILE INDEX:
MODIFICATION REQUEST:
HANGER NO. 1.' 115.7

COMPUTER GRAPHICS SYSTEM

REV. NO.	DATE	ZONE	REVISION DESCRIPTION	DRAWN	CHK'D	APPRV'D	REL'D

MICROFILM NO.

C.G.S. FILE NO.

SCALE NTS | PROJ. NO. 31628

DRAWN RAM 11/2/81 | DATE | APPRV'D. 1 | DATE

CHECKED TAS 10/3/81 | APPRV'D.

WISCONSIN ELECTRIC

POINT BEACH NUCLEAR PLT UNIT
WISCONSIN ELECTRIC POWER C
MILWAUKEE, WISCONSIN
PBA-1070 SH. 10

B | P.B.A | -10 | 70 | S | H.L.O

LS01289

POINT BEACH NUCLEAR PLANT

MINOR/SPECIAL PROCESS TEMPORARY CHANGE REVIEW AND APPROVAL

NOTE: REFER TO PROCEDURE PBNP 2.1.3, TEMPORARY CHANGES TO PROCEDURES, FOR GUIDANCE ON COMPLETING THIS FORM.

PROCEDURE NUMBER/TITLE IWP 88-099*C

Revision Number/Date 0 Date of Change 10/4/91

UNIT: ☐ PB1 ☒ PB2 ☐ PB0

Temporary change valid until Nov. 15TH, 1991

Temporary change to be one time use only or duration of less than 24 hours? ☒ Yes ☐ No

If no, then temporary change tracking has been put into effect. Initials _____ Date _____

If the procedure is of a non-signoff type, list affected manual locations on form PBF-0026h and attach.

Permanent procedure change required? ☐ Yes ☒ No

If yes, revision initiated by: Originator ~~Nov. 15TH 1991~~ Date _____

Form Designation
(Circle one)

NOTE: Copy original TCRA form prior to completing designation.

NOTE: See back for routing information.

Form No	Use
1.	Review and Approval
2.	Group Tracking
3.	Work/Record
4.	Clerical Tracking

REQUIREMENTS

1. The procedure changes listed on this form shall not change the intent of the procedure.
2. Is screening for 10 CFR 50.59 applicability required in accordance with QP 3-3. If YES, attach applicable portions of Form QP 3-3.1.
   If NO, explain: CHAMPS ID TAGS ARE TEMPORARILY IN PLACE, AND WILL BE PERMANENTLY REINSTALLED PRIOR TO ACCEPTANCE. NO SAFETY SIGNIFICANCE IN DELAYING THIS STEP.
3. If this procedure change implements a temporary change/modification to the facility, then a temporary modification form, PBF-2013, shall be completed as described in PBNP 2.1.3 and attached.
4. If other groups have procedures which may be affected by these changes, then notification shall be made. Groups/Individuals notified: _____

Step	Change/Reason
3.1.3 o.	THIS STEP WILL NOT BE DONE AT THIS TIME. THIS STEP CAN BE DONE LATER, AND WILL BE VERIFIED COMPLETE PRIOR TO ACCEPTANCE (SEE STEP 5.1.4)

Use continuation sheet, PBF-0026c for additional description of changes.

Changes originated by [signature] Date 11/2/91

APPROVAL PRIOR TO USE

[signature] Date 11/2/91 Time 0820

DSS or Cognizant Supervision

SUBSEQUENT REVIEW AND APPROVAL

WJB [signature] Date 11/18/91

Cognizant Group Head

POINT BEACH NUCLEAR PLANT

MINOR/SPECIAL PROCESS TEMPORARY CHANGE REVIEW AND APPROVAL

NOTE: REFER TO PROCEDURE PBNP 2.1.3, TEMPORARY CHANGES TO PROCEDURES, FOR GUIDANCE ON COMPLETING THIS FORM.

Form Designation
(Circle one)

NOTE: Copy original TCRA form prior to completing designation.

NOTE: See back for routing information.

Form No	Use
1.	Review and Approval
2.	Group Tracking
3.	Work/Record
4.	Clerical Tracking

PROCEDURE NUMBER/TITLE IWP 88-099*C

Revision Number/Date 0 10/4/91 Date of Change 10/18/91

UNIT: ☐ PB1 ☒ PB2 ☐ PB0

Temporary change valid until _____

Temporary change to be one time use only or duration of less than 24 hours? ☒ Yes ☐ No

If no, then temporary change tracking has been put into effect. Initials _____ Date _____

If the procedure is of a non-signoff type, list affected manual locations on form PBF-0026h and attach.

Permanent procedure change required? ☐ Yes ☒ No

If yes, revision initiated by: Originator _____ Date _____

REQUIREMENTS

1. The procedure changes listed on this form shall not change the intent of the procedure.
2. Is screening for 10 CFR 50.59 applicability required in accordance with QP 3-3. If YES, attach applicable portions of Form QP 3-3 1.
   If NO, explain: CHANGE SIMPLY MOVES TWO STEPS FROM PRE-FAB SECTION TO BODY OF INSTALLATION SECTION. NO IMPACT ON ORIGINAL 50.59.
3. If this procedure change implements a temporary change/modification to the facility, then a temporary modification form, PBF-2013, shall be completed as described in PBNP 2.1.3 and attached.
4. If other groups have procedures which may be affected by these changes, then notification shall be made. Groups/Individuals notified: P/G – M. McCloud

Step	Change/Reason
2.4.2	MOVE THIS STEP INTO SECT 3.1.2, 'PHASE 1 – INSTALLATION', PRIOR TO STEP
~~2.4.3~~	3.1.2 i); INSTALLATION OF PREFABBED SECTIONS.
2.4.3	MOVE THIS ~~STEP~~ SECTION TO 3.1.2 AND COMBINE WITH STEP j.
3.1.1 d.	WRONG VALVE # FOR IA SUPPLY TO ZAF-4102, SHOULD BE IA-350
j 3.1.3 n.	

Use continuation sheet, PBF-0026c for additional description of changes.

Changes originated by [signature] Date 10/18/91

APPROVAL PRIOR TO USE

[signature] Date 10/18/91 Time 1520

DSS or Cognizant Supervisor

SUBSEQUENT REVIEW AND APPROVAL

[signature] Date 10/18/91

Cognizant Group Head

POINT BEACH NUCLEAR PLANT

PROCEDURE USAGE

Record/Field Copy Identification

RECORD

Field Copy Number

RED - Record Copy, BLACK - Field Copy

Procedure IWP 88-099*C, "2P29 MINI-RECIRC LINE REPLACEMENT

Revision No. 0

Revision Date 10/4/91

Procedure Revision Checked Current and Group Tracking Checked for Temporary Changes:

By [illegible] Date 10/4/91

Record Copy Holder/Location TODD MIELKE / PBNP OR OPS / CONTROL ROOM

FIELD COPY DISTRIBUTION			
Copy No.	Holder/Location	Issue Date	Return Date
1	P/G - PBNP	10/4/91	
2	PIEPER - PBNP	10/4/91	
3	I&C - PBNP	10/4/91	
4			
5			
6			
7			
8			

NOTE 1: ANY TEMPORARY CHANGES MADE TO THIS PROCEDURE SHALL BE MADE TO THE RECORD COPY AND ALL OTHER FIELD COPIES THAT HAVE BEEN ISSUED.

NOTE 2: RETURN ALL FIELD COPIES TO THE HOLDER OF THE RECORD COPY UPON PROCEDURE COMPLETION.

FOR ISC USE ONLY
SHEET NO. _____
COMPLETED _____

NUCLEAR POWER DEPARTMENT

PERMANENT PROCEDURE AND PROCEDURE REVISION REVIEW & APPROVAL

PROCEDURE IWP 88-099*C, MINOR, UNIT 2, 2P29 AUX FEEDWATER PUMP RECIRC LINE IMPROVEMENT

Revision Number 0

DESCRIBE CHANGES MSS Revision Summary

Date OCT 0 4 1991

Step	Change/Reason
	Rev 0
	MSS

Use PBF-0026c for additional description of changes

YES	NO	
☒	☐	IS SCREENING FOR 10 CFR 50.59 APPLICABILITY REQUIRED IN ACCORDANCE WITH QP 3-3. IF YES, ATTACH APPLICABLE PORTIONS OF FORM QP 3-3.1. ~~IF NO~~, EXPLAIN: 50.59 FOR THIS MOD WILL COVER THE INSTALLATION (IWP) ALSO
☐	☒	CHECK IF THIS PROCEDURE CHANGE IMPLEMENTS A TEMPORARY CHANGE/ MODIFICATION TO THE FACILITY AND ATTACH FORM PBF-2013 COMPLETED AS DESCRIBED IN PBNP 2.1.1.
☐	☒	CHECK IF CLASSROOM TRAINING IS NECESSARY: AFTER ISSUE ☐ BEFORE ISSUE ☐ IF YES, BRIEFLY DESCRIBE TRAINING DESIRED ON PBF-0026c AND ATTACH TO THIS FORM.
☐	☒	CHECK IF THIS REVISION CONSTITUTES A BIENNIAL REVIEW AS DESCRIBED IN PBNP 2.1.2.

Originator — Date 10/1/91

Review (Approval) Management person from cognizant group — Date 10/1/91

APPROVALS

MAJOR Initial Issue All Revisions Cancellations MINOR, Rev. 0 Cancellations	Manager's Supervisory Staff Review** James Rem Date 10/3/91 (For the Supervisory Staff) **Form PBF-0026d must accompany this sheet if serial review and approval was conducted.	MSSM 91-116 NRH Date 10/3/91 Manager - PBNP Approval
Minor and Special Process	Operating/Other Procedures Date Cognizant Group Head	SMPs/RMPs (both signatures required) Date Superintendent - Operations Date Cognizant Group Head
NNSR Manager Approval required for QPs	Date Group Head/Manager Approval Date Other Approval (If Required)	Date Manager - PBNP Approval (If Required) Date Other Approval (If Required)

See other side for summary of PBNP 2.1.1 approval requirements.

IWP NUMBER INP 88-099*C

INSTALLATION WORK PLAN

PBNP MINOR PROCEDURE ☒

MAINTENANCE WORK REQUEST WORK PLAN ☐

Check As Applicable

MWRs
914160 P/G } PREFAB
914162 PIEPER
914161 P/G } ACTUAL INSTALLATION
914163 PIEPER
914164 I&C

FOR MODIFICATION # 88-099*C , MWR #

INSTALLATION WORK PLAN TITLE

2P29 AUX FEEDWATER PUMP MINI-RECIRC LINE IMPROVEMENT

UNIT 2 ☒ QA-SCOPE ☐ NON QA-SCOPE

Originator [signature] Date 9/28/91

Reviewer [signature] Date 10/1/91

Design Group Superintendent [signature] Date 10/3/91

Quality Engineer [signature] Date 10/2/91

Installation Group Superintendent [signature] Date 10-3-91

Superintendent Operations [signature] 10/2/91 Date 10/2/91

NOTE: Changes to this work plan must be done with the concurrence of the responsible engineer and the installation supervisor, or as delineated within the IWP.

2P-29 AUX FEEDWATER PUMP RECIRC LINE IMPROVEMENT
UNIT 2

1.0 SCOPE

1.1 The purpose of this modification is to increase the flow capacity of the 2P-29 aux feedwater pump recirc line and to install flow indication on the recirc line for ASME Section XI testing.

1.2 The scope of this work plan is to replace the 2P-29's existing 1-1/2 inch recirc line with a 2 inch line along with replacing the check, control, and manual valves, replacing the restricting orifice, add a flow orifice and transmitter, and changing the setpoints for 2AF-4002, 2P-29 aux feedwater pump recirc line control valve.

NOTE: 1P-29 and P-38A and B are considered operable with their respective mini-recirc line isolated if the discharge path for each pump is maintained open to at least one steam generator.

***CAUTION*: IF 1P-29, P-38A, OR P-38B AUTO START OR NEED TO BE RUN, DO NOT OPERATE 1P-29, P-38A OR B AT A DISCHARGE INDICATED FLOW OF <50 GPM WHEN THE MINI-RECIRC LINE IS ISOLATED.**

1.3 The approach of this installation will be to isolate the recirc line for all four aux feedwater pumps while Unit 2 is in a refueling outage, cut and cap the existing recirc line on the 2P-29 pump, and install the new recirc line for 2P-29 up to the manual valve 2AF-53. A hydrostatic test will be completed and the recirc line return header returned to service. The tie-in at the discharge header will then be done with just 2P-29 out of service. The hydrostatic test of the high pressure portion of the lines, the electrical tie-ins, and setpoint changes will be made prior to Unit 2 reaching criticality.

1.4 This is QA scope work. QA Scope Clarifications:

The control valve, 2AF-4002, and the piping and check valve upstream of 2AF-4002 are QA scope, along with all the material and anchorages for the piping supports. The piping, fittings, valves, etc. downstream of 2AF-4002 are non-QA scope.

2.0 PRE-INSTALLATION REQUIREMENTS

2.1 References:

2.1.1 Working drawing(s):

SK-AFW-002/88-099
SK-AFW-010/88-099
SK-AFW-011/88-099
SK-AFW-012/88-099
SK-AFW-013/88-099
SK-AFW-017/88-099
PBA-1070, Sheet 7
PBA-1070, Sheet 8
PBA-1070, Sheet 9
PBA-1070, Sheet 10

INITIALS

2.1.2 Permanent Drawings

Bechtel E-98 Sh.2 and Sh. 4

2.1.3 Setpoint change for 2dPIS-4002.

2.1.4 Spec sheet for flow orifice for transmitter calibration.

2.1.5 ECR PB-91-067 (Changes in 2P-29 recirc line routing.)

Responsible engineer has assured that all references listed above are approved and are either with the proper installation group or attached and assigned to the proper installation group. RE/LE

2.1.6 MI 32.4, "Guidelines for Exclusion of Foreign Material from Plant Systems"

2.1.7 The installation will be in accordance with B31.1-1986.

2.1.8 Welding Procedures:

Phillips-Getschow WPS 1, WPS 8, WPS 8-1, and AWS D1.1.

2.1.9 MI 26.1.1, "General Instructions for Crimp Style Cable Terminations, Splices, and Connections"

2.1.10 PB-196, "Specification for Non-Safety Related Electrical Installation"

2.1.11 MI 32.8, "Guidelines for Opening Piping Systems"

2.1.12 MI 32.9, "Erection of Tube and Clamp Sectional Scaffolding"

2.2 Background references (those references not needed to perform work):

2.2.1 MR 88-099*C

2.2.2 Calculations N-91-007, N-91-031, and N-91-032.

2.3 Installation Preparation Activities

2.3.1 Bill of Material is attached to this IWP.

2.3.2 Responsible engineer has assured that all materials on the BOM are on site, available for the modification, and QA released. RE/LE

INITIALS

2.3.3 CHAMPS Nos. and/or labels are required and have been requested and/or obtained. — RE/LE

2.4 Prefabrication Work

2.4.1 Prefabricate section of piping from the tie-in point on the recirc header back to the manual valve 2AF-53. Minimize the number of field welds that will be required to install this section. — MJM P/G

2.4.2 Flush piping sections with DI water prior to installation. — MJM 10-25-9 P/G

2.4.3 Perform visual exams on all welds at completion of prefabrication. — P/G QC

THESE 2 STEPS WILL BE DONE IN THE BODY OF THE INSTALLATION. 10/19/91

Responsible engineer has assured that all prefabrication is completed and available for the modification.

R.E./L.E. _____ Date 10/18/91

2.5 Identification of Permits Required

2.5.1 The MWR(s) for the IWP have been written and submitted to CHAMPS (see cover sheet).

2.5.2 Ignition control permit is required.

2.5.3 Tag outs and hydro testing will be done in phases and will be completed as part of the installation.

2.6 Personnel Safety Concerns

There are no drains in the recirc line, so the line will be filled with water. Be prepared to drain the existing 2P-29 recirc line when the first cut is made.

2.7 Pre-Installation Discussion

2.7.1 A field walkdown shall be performed to verify that all aspects of the procedure may be performed as intended.

Install. Sup. _____ Date 10-18-91

2.7.2 A pre-Installation discussion with the installation group representative, the testing group representative, and the acceptance group representative has been performed.

R.E./L.E. _____ Date 10/18/91

2.7.3 PG-QC has been asked to summit form SB 190 (ref. ILHR 41.56) and to notify the ANI.

Install. Sup. _____ Date 10-18-91

2.8 Required Plant Conditions

The plant must be in the cold shutdown condition prior to commencing installation, and this IWP must be installed, tested, and accepted prior to initial criticality. As long as these conditions are met, no LCOs will be entered for 2P-29.

2.9 Release for Installation

The pre-Installation requirements are complete and it is acceptable to proceed with the Installation.

DSS _____ Date 10/19/91 Time 1510

3.0 Installation — INITIALS

NOTE: If any of the steps cannot be completed as written or a change is necessary to complete the task, work must stop and the situation must be discussed with the responsible engineer, the liaison engineer, or the installation supervisor.

3.1 Installation Description

NOTE: The following phases may be worked simultaneously, if desired, but Phase I should be expedited to minimize the time that the recirc paths for the other AFW pumps are out of service.

3.1.1 Phase I: Equipment Isolation and Tag Out

NOTE: 1P-29 and P-38A&B are considered operable with their respective mini-recirc line isolated if the discharge path for each pump is maintained open to at least one steam generator.

***CAUTION*: IF 1P-29, P-38A, OR P-38B AUTO START OR NEED TO BE RUN, DO NOT OPERATE 1P-29, P-38A OR B AT A DISCHARGE INDICATED FLOW OF <50 GPM WHEN THE MINI-RECIRC LINE IS ISOLATED.**

NOTE: The following controller adjustments may cause the respective valves to go full open. Do only one valve controller at a time.

a. Adjust the controllers for AF-4012 and AF-4019 to maintain a minimum position of 10% open. This can be done by stationing someone at the valve and adjusting the controller until the valve moves 1/16" - 1/8" open. Make a note of the original controller setting.

AF-4012 adjusted Orig. setting 99% I&C BJP
AF-4019 adjusted Orig. setting >100% I&C BJP

b. Stroke AF-4012 and AF-4019 to verify operation. ___ OPS

c. Post temporary information tags as directed by temporary information sheets 91-33 and 91-34 (see attached). ___ OPS

INITIALS

d. Tag out the system per the following list.

Component ID	Description	Position
AF-27	P-38A mini-recirc manual isol.	Shut
AF-40	P-38B mini-recirc manual isol.	Shut
AF-15	1P-29 mini-recirc manual isol.	Shut
AF-1	AFW recirc return to CST isol. vlv.	Shut
2MS-2019	2B S/G steam supply MOV control switch	Shut
2MS-2020	2A S/G steam supply MOV control switch	Shut
D14 Bkr 6	2MS-2020 steam to 2P-29	Open (off)
D12 Bkr 8	2MS-2019 steam to 2P-29	Open (off)
2MS-2020	2A S/G steam supply MOV handwheel	Shut
2MS-2019	2B S/G steam supply MOV handwheel	Shut
2MS-126	2P-29 steam supply manual isol. vlv.	Shut
2AF-56	2P-29 discharge to 2HX-1A	Shut
2AF-57	2P-29 discharge to 2HX-1B	Shut
AF-64	2P-29 suction from CST	Shut
2AF-4006	2P-29 SW suction MOV control switch	Closed
2AF-4006	2P-29 SW suction MOV handwheel	Shut
2B52-427M	2AF-4006 bkr on 2B42	Open
D12 Bkr 4	2AF-4002S power and 4002 VPI	Open
~~IA-351~~ IA-350	2AF-4002 IA supply	Shut
AF-58	2P-29 discharge casing drain	Open
AF-58A	2P-29 discharge high point vent	Open
AF-58B	2P-29 discharge high point vent	Open
AF-98A	2P-29 discharge header drain	Open
AF-98B	2P-29 discharge header drain	Open
SS-170	2P-29 suction sample isol. vlv.	Shut

10/19/91

Tag Series 217-95

OPS

INITIALS

The pre-installation requirements for Phase 1 have been met and it is acceptable to proceed with Phase 1 of the installation.

DSS [illegible] Date 11-21-91

3.1.2 Phase 1: Installation

NOTE: Individual and common recirc headers cannot be adequately drained. Horizonal 3" header may have to be siphoned to create suitable welding conditions.

a. QC Requirements for Phase 1. All welds (piping and support) need to be visually inspected after completion. In addition, the open butt weld needs to be visually inspected prior to fit-up and after the root pass. [illegible] P/G QC

b. Drain the system by cutting or drilling the 2P-29 mini-recirc line or removing the bonnet of the existing AF-53, or removing the relief valve, AF-4035, in the common header. Control drainage as well as possible by using hoses, catch basins, etc. Coordinate with OPS as necessary. MJM 10 P/G

c. Cut and remove a portion of the existing 1-1/2" recirc line close to the 3" common recirc header reducer and siphon the water from this header as necessary to provide a suitable welding environment. MJM 10-2 P/G

d. Remove relief valve AF-4035, if not done already, and set up an argon purge for welding. MJM 10-2 P/G

e. Remove the remaining section of the existing 1-1/2" recirc line back at least to the first elbow downstream of AF-53. Save the CHAMPS ID tags. MJM 10-2 P/G

f. Make a new penetration in the full size region of the reducer (before the reducer begins to taper down). Install sock-o-let or half coupling on this penetration See SK-AFW-002/88-099 and -017/88-099 for details MJM 10-2 P/G

g Install a cap or plug where the existing 1-1/2" recirc line has been cut off. See SK-AFW-017/88-099 for details. MJM 10-2 P/G

INITIALS

h. Install the new support for the N-S run of the new 2P-29 recirc line, so it can be used when installing prefabbed sections. See PBA 1070 sh. 10 for details. MJM 10-25 P/G

NOTE: Support the new prefabbed sections installed in the next step with a temporary support rated for 400 lb, on the E-W run.

PERFORM STEP 2.4.2. → 10/18/91

i. Install the prefabricated section(s) of piping which includes the new AF-53. Wipe down the sections of piping after installation. Hang the old CHAMPS ID tag on the new valve. P/G 10-25

j. QC requirements for the above installation has been completed. INCLUDE ALL PREFABBED WELDS FROM STEP 2.4.3. 10/16/91 P/G QC

k. Red tag the new AF-53 shut. OPS

l. Clear red tags as necessary to fill and vent the mini-recirc headers between the CSTs and the manual isolation valves. OPS

m. Align the system as necessary and hydro the mini-recirc header per PBNP 3.2.5. Connect the hydro rig to the flanged connection for relief valve AF-4035. See hydro sheets attached. OPS

n. After a satisfactory hydro, replace the relief valve AF-4035 using a new 2" Flexitallic gasket. Torque nut to 60 ft-lbs using a staggered pattern. P/G

o Conditional Acceptance. The first phase of this mod is installed and satisfactorily tested, and may be returned to service.

Mgr. Accpt. Group/DSS _____ Date 10-26-91

p Clear red tags for AF-15, -27, -40 (mini-recirc manual isolation valves) and lock these valves open. Also clear the red tag for AF-1, (if not cleared previously). OPS

VALVE AF-1 Red lock 61455
" AF-15 " " 61516
" AF-27 " " 61605
" AF-40 " " 61041

INITIALS

NOTE: The following controller adjustments may cause the respective valves to go full open. Do only one valve controller at a time. Ensure other electric pump and U1 steam-driven pump are operable prior to adjustment.

q. Adjust the controllers for AF-4012 and AF-4019 to their original settings.

AF-4012 returned I&C BB
AF-4019 returned I&C BB

r. Stroke AF-4012 and AF-4019 to verify operation. KJ OPS

s. Remove the temporary information tags that were installed per sheet 91-33 and 91-34. OPS

NOTE: The 1P-29, P-38A&B auxiliary feed pumps should be considered in-service at this time with no restrictions on discharge flow.

3.1.3 Phase 2: Installation

NOTE: Flush all new components with DI water before installation and wipe down the outer surfaces after installation. The steps in this phase may be worked in any logical order.

a. QC Requirements for Phase 2: Perform visual exams of all welds (piping and support) after completion. Additionally, perform visual inspection on open butt weld prior to fit-up, and a surface exam (PT) on the root pass. Perform surface exams (PT) on the three welds between the check valve and the discharge header connection. Also notify the ANI of the schedule for this phase, so that he may witness fit-up, root pass, final pass inspections/exams if he so desires. P/G QC

b. Disconnect the cabling for the limit switches and the solenoid valve on the existing 2AF-4002. Make sure cables are appropriately labeled. RJK Pieper

INITIALS

NOTE: Be sure to keep foreign material out of the discharge header when performing the following steps. Reference MI 32.4 or contractor equivalent.

c. Remove the remainder of the old mini-recirc line up to and including the connection to the 4" discharge header. Remove the small support that was downstream of the old AF-53, and remove the hanger in the overhead on the E-W run over the walkway. Save the SOV off of the old 2AF-4002. Also save the CHAMPS ID tags for reuse. — 10-30-91 MGB P/G

d. Install the base plates for the new supports (see PBA-1070 sh. 7, 8, and 9 for details and SK-AFW-010 for locations). Also cut the angle off of the existing support which had been immediately downstream of the old 2AF-4002 (DB-3-H209), and prep the baseplate. — MGB 11-1-9 P/G

e. Resize the hole in the discharge header and prep the area for installation of the sock-o-let. Perform an informational PT on the prep area. — MGB 10-30 P/G

f. Install the sock-o-let on the discharge header. Ensure the ANI is informed of this evolution so that he can witness QC inspections as desired. — MGB 10-30-9 P/G

g. Perform a visual inspection of the 4" discharge header prior to the next step, to ensure there is no foreign material in the header. — P/G QC

NOTE: In the next step, the flow orifice must be oriented so that the sensing line connections are located at the horizontal centerline of the pipe. Also ensure correct flow direction on the orifice plate.

h Install the new recirc line from the branch connection on the discharge header up to the new AF-53 (previously installed in Phase I). See SK-AFW-010 for details. — MGB 10-30- P/G

i After installing the orifice plate in-between the flanges, tighten the flange studs per MI 32.1 or equivalent — P/G

INITIALS

j Install the remainder of the new piping supports. See SK-AFW-010/88-099 for location and PBA-1070, Sh. 7, 8, 9 for individual support details. MGB 11 P/G

k. Finish modifying support DB-3-H209 by welding a 3x3x3/8" A36 angle to the baseplate, using a 1/4" fillet weld all around, and install a 3/8" diameter U-bolt for 2" pipe. If necessary, weld in a shim (3/16" fillet both sides). There is to be an approximate 1/16" gap between the pipe and U-bolt on all sides.

l. Install support for flow transmitter. See SK-AFW-013 for details. Locate on wall below the pipe, similar to the other AFP mini-recirc lines. MGB 10 P/G

m. Mount the old solenoid valve on the new control valve, 2AF-4002, and reconnect the air tubing. Install new tubing and components in similar fashion as was done on the other AFPs. Obtain tubing and Swagelok fittings as necessary from stock (non-QA). MGB-10 P/G

JEM 10/15/91

n. Clear the red tag on IA-~~351~~ 350, IA supply to 2AF-4002 and snoop the new connections to the control valve Set the regulator for 100 psig OPS

~~o. Reinstall the CHAMPS ID tags saved from the original components.~~ N/A P/G

p. All QC requirements have been met for this phase of the installation P/G QC

q Prime and paint the supports and CS sections of the discharge header that may have been stripped during preps. Also paint the handwheel on the new AOV orange. MGB 10 P/G

INITIALS

3.1.4 Electrical and I&C Work

NOTE: All cables and raceways shall be installed per Spec. PB-196. Raceways shall be seismically supported. Complete attached installation and termination tickets for cables and raceways. This section can be worked in parallel with the Phase 1 and 2 Installations. The individual steps of this section can be worked in any logical order.

a. Mount electrical enclosure for transmitter power supply and mount power supply in the enclosure. Locate similar to other AFP mini-recirc lines. _____ Pieper

b. Run conduit and cable from TB142 to 2TB140. Do not terminate at TB142. See SK-AFW-011 for layout, and see cable and raceway schedules for cable and conduit details. _____ Pieper

c. Install transmitter on its support and install 3/8 inch SS tubing from the transmitter to the orifice plate, per Rosemount Tech Manual, Control No. 00325. Test-tees and isolation valves are to be installed as necessary. _____ I&C

d. Install cable between the power supply and transmitter. Make final terminations. See SK-AFW-011, -012 for layout, and see cable and raceway schedules for cable, conduit, and terminations details. _____ I&C

***CAUTION*:** **TERMINALS IN THE FOLLOWING STEP ARE ENERGIZED WITH 120 Vac LIGHTING CIRCUIT POWER. USE APPROPRIATE PRECAUTIONS. BREAKER 7L-25 MAY BE TAGGED OPEN TO ISOLATE POWER IF DESIRED.**

e. Make final terminations for the power at TB142. See SK-AFW-012 and cable and raceway termination tickets for details. _____ Pieper

f. Calibrate new transmitter, 1FIT-4049, per attached cal. sheet. _____ I&C

INITIALS

g. Change setpoints on 2dPIS-4002 from 30 and 75 gpm to 110 and 145 gpm, respectively. See the approved setpoint change sheet attached. — I&C

NOTE: Install cables and conduits per Spec. PB-220, for the last two steps.

h. Add a junction box for 2AF-4002 limit switches and SOV wiring, in conduit CJ2. Lift leads and pull cables ZC2NC005B, -C, and -D back out of affected conduits, as necessary. Record wire locations of any lifted leads. Install a junction box/conduit tee so that the wires for limit switches/SOV reach their new locations. — Pieper

i. Pull cables ZC2NC005B, C, and D, through the reworked conduit sections, to their original destinations. Terminate any leads lifted in the previous step, per their recorded locations. Terminate wires for the SOV and limit switches on 2AF-4002, per E-98 Sh. 2 and 4. — Pieper

3.2 As-Built Description

3.2.1 This IWP was installed by:

P/G MAYNARD BLANIK, BILL MUSIAL

Pieper FRANK HERMANS / GENE TOEBE

I&C [illegible]

3.2.2 Describe the "as-built" configuration, listing any ECRs, NCRs, or other considerations that affect the "as-built" condition of the modification.

ECRs: PB91-067, PB-91-082

Attach any additional documentation of the "as-built" description to this IWP.

3.2.3 QAR Numbers will be recorded in the MWR.

INITIAL

3.3 Installation Complete

Install. Sup. P/G _____ Date 11-2-91

Install. Sup. Pieper _____ Date 11/1/91

Install. Sup. I&C _____ Date 11/4/91

R.E./L.E. _____ Date 11/2/91

The QC requirements of this installation have been completed. The QC requirements consist of visual and surface inspection of welds as described earlier.

QC Inspector _____ Date 11-1-91

4.0 TESTING

4.1 Testing Intention

The testing section will perform hydro and leak checks on the portions of the new piping line which were not hydro tested in the installation section. Functional tests of the new mini-recirc valve and the pump itself will also be performed. By taking readings on the new transmitter during performance of IT-09, mini-recirc line flow capacity will be verified. Additionally, three welds will need surface exams (PT) since they were not inside a hydro boundary. It can be noted that visual exams of all welds and other necessary NDE was completed in the installation section of this IWP.

4.2 Testing Acceptances Criteria

4.2.1 All NDE must be acceptable per B31.1-1986.

4.2.2 Hydro tests must be acceptable per PBNP 3.2.5.

4.2.3 Flow reading on 1FI-4049 should be between 100 and 140 gpm.

4.3 Testing Description

4 3 1 Clear red tags as required for fill and vent of the portion of the 2P-29 mini-recirc between manual isolation, AF-53, and check valve, AF-114.

OP

INITIALS

4.3.2 Align system as necessary and hydro the 2P-29 recirc line between the check valve, AF-114, and the manual isolation valve, AF-53, per PBNP 3.2.5. Connect hydro rig at one of the taps on the flow orifice flange. Make sure the flow transmitter manifold is isolated. Also keep a vent path open on the pump, in case the check valve leaks during the hydro. See attached hydro data sheet. OPS

4.3.3 Stroke 2AF-4002 using the manual gag handwheel. Verify proper operation of indicating lights in Control Room. OPS

4.3.4 Clear the remaining red tags for this IWP. OPS

4.3.5 Fill and vent 2P-29, and align it for IT-09. OPS
FILLED & VENTED
11-9-91 GSS

4.3.6 With the new recirc line filled and vented, do an initial visual leak test during IT-09, per PBNP 3.2.5. Record results on the attached hydro data sheet. OPS

4.3.7 During IT-09, take a flow reading from 2FIT-4049 while 2AF-4002 is open. Also verify that the position indicating lights for 2AF-4002 work correctly. 125 gpm OPS

4.4 Testing Results

Describe the results of the testing below:

Sat. Also completed inservice tests of welds impractical to hydro. 11/12/91

Attach any additional testing documentation to this IWP.

4.5 Testing Complete

The testing is completed and adequately tests the modification and the associated installation.

Testing Supervisor [signature] Date 11-13-91

R.E./L.E. [signature] Date 11/13/91

5.0 RESTORATION

5.1 Pre-Acceptance

5.1.1 Update the Control Room P&ID of M-217 . done

5.1.2 Mark up the Control Room copy of setpoint document SPTP 14.11, to list new setpoints for dPIS-4002. done

5.1.3 Temporarily or permanently revise IT-09, -09A, -295, -295A to reflect this mod. done

5.1.4 Verify old CHAMPS ID tags have been rehung on new components. done

All items that need to be completed prior to acceptance have been completed.

R.E./L.E. _____ Date 11/13/91

5.2 System Restoration

5.2.1 Close out all remaining tag outs and permits.

5.2.2 Align system as necessary for normal operations.

DSS _____ Date 11-12-91

6.0 ACCEPTANCE

This modification has been installed and tested and is acceptable.

Mgr. of Acceptance Group _____ Date 11-13-91

OK / JK 11-13-91

RETURN THE COMPLETED IWP AND MODIFICATION REQUEST TO RESPONSIBLE ENGINEER

INTERNAL CORRESPONDENCE

TO: Julie Pederson

FROM: T. W. Garot

DATE: August 8, 1991

SUBJECT: IWP for MR-88-099*C

COPY TO:

==========

I have made some changes to the IWP which are indicated on the attached. Please note I have expanded the tag boundry to include the steam supply MOV,s. The temporary information sheets and tags are attached. These will have to be signed by the DSS at the time of installation. I have submitted changes to the electric AFP test and am working on the changes for 2P-29 tests. If you need any more assistance from me just let me know.

TW Garot

AUG . - 1991

PARTS LIST / BILL OF MATERIALS FOR

MOD REQUEST 88-099 *C / ~~DRAWING / SKETCH NO.~~

ITEM NO.	QUANTITY REQUIRED	MATERIAL DESCRIPTION/ SERVICE RATING	VENDOR/ CATALOG NO.	LOT NO. / MOD BIN / P.O. NO.
1	1	2", 1500# class, Globe Valve, CS, SW		P.O. 185009 Obtain From Mod Bin
2	1	2", 90° Elbow, SW Ends, S.S Type 304, 3000#		Lot # 9015019 Obtain From Stock
3	1	2" Flow Orifice Flanges, Flange Set with Bolting and gaskets, SS Type 304		P.O. # 185010 Obtain From Mod Bin
4	1	Flow Orifice Plate, SS Type 316		P.O. # 185010 Obtain From Mod Bin
5	1	2" 1500# Control Valve, SS	Copes Vulcan # 2IA*8RG	P.O. # 183687 Obtain From Mod Bin
6	1	Flow Restricting Orifice, SS Type 304, SW ends Tag No	Borg Warner # 125385-CH	P.O. # 184514 Obtain From Mod Bin
7	1	Flow Transmitter with Integral Display, supplied with Manifold	Rosemount #1150-150-2 #1151DP-5-S-22-B1-M5	P.O. # 184161 Obtain From Mod Bin
8	1	6"x6"x4" Electrical Enclosure NEMA 12 JIC panel		P.O. # 160141 obtain From Mod Bin
9	1	Transmitter Power Supply	Rosemount #49-15-461	P.O. # 181528 In I&C Mod Bin
10	AS NEEDED	2", sch. 40, seamless pipe, Type 304L		P.O. # 184859 Obtain From Mod Bin
11	AS NEEDED	2", sch. 80, seamless pipe, Type 316		P.O. # 184859, [illegible] Obtain From Mod Bin
12	↓	2", sch 40, 90° Elbow, SW, Type 304		P.O. # 184860 Obtain From Mod Bin
13		2", sch. 40, 45° Elbow, SW, Type 304		P.O. # 184860. Obtain From Mod Bin
14	NOT USED			
15	1	1½" sch. 40 pipe cap, SW, Type 304		P.O. 184860 Obtain From Mod Bin
16	1	2", 1500# class, check valve, S.S. Type 316	Rockwell Edwards # 3674 F316J	Lot # 9041389 Obtain From Mod Bin
17	2	4"x2" 3000# Sockolet Type Fitting Type 304		P.O. # 185076 Obtain From Mod Bin

PARTS LIST / BILL OF MATERIALS FOR

MOD REQUEST 88-099* / DRAWING / SKETCH NO. _____

ITEM NO.	QUANTITY REQUIRED	MATERIAL DESCRIPTION/ SERVICE RATING	VENDOR/ CATALOG NO.	LOT NO. / MOD BIN / P.O. NO.
18	AS NEEDED	2", sch 80 seamless pipe, Type 316	_____	P.O. # 185036 Obtain From Mod Bin
19	↓	3/8" Whitey Valve, SS-1VS6, For Transmitter Isolation	Whitey # SS-1VS6	I&C To Obtain From Stock
20	↓	3/8" Swagelok Tee, SS-600-3, For Transmitter Sensing Lines	Swagelok # SS-600-3	I&C To Obtain From Stock
21	↓	3/8" Swagelok Plug, SS-600-P	Swagelok # SS-600-P	I&C To Obtain From Stock
22	AS NEEDED	3/8" S.S. Tubing, 0.065" wall Thickness, Type 304 or 316	_____	I&C To Obtain From Stock
23	AS NEEDED	Miscellaneous Stainless Steel Swagelok Fittings Needed for the Transmitter Lines	_____	I&C To Obtain From Stock
24	4 (4)	3/8" ϕ x 5" long Hilti Kwik Bolt II	_____	Lot # 9030907 Obtain From Stock
25	8 (8)	1/2" ϕ Hilti Kwik Bolt II	_____	Lot # 9030908 Obtain From Stock
26	NOT USED	1" ϕ Hilti Kwik Bolt II	_____	Lot # 9030911 Obtain From Stock
27	AS NEEDED	1/2" Thick A-36 Plate	_____	Lot # 9027700 Obtain From Stock
28	NOT USED	1" Thick A-36 Plate	_____	Lot # 9030198 Obtain From Stock
29	AS NEEDED	2"x2"x1/4" Thick A-36 Angle	_____	Lot # 9027726 Obtain From Stock
30	↓	C 3x4.1 Channel A-36	_____	Lot # 9028919 Obtain From Stock
31	↓	C 4x7.25 Channel A-36	_____	Lot # 9030657 Obtain From Stock
32	NOT USED	3" Sch. 80 Pipe, A106 Grade B	_____	Lot # 9023143 Obtain From Stock
33	AS NEEDED	3/8"x2" Standard U-Bolt w/Nuts	Grinnel # 137N	Lot # 9027629 Obtain From Stock
34	↓	2", Sch 80 pipe, A106 Gr. B	_____	Lot # 9017704 Obtain From Stock

Form DG-G02.1 Rev. 1.1

PARTS LIST / BILL OF MATERIALS FOR

MOD REQUEST 88-099xC / DRAWING / SKETCH NO. _____

ITEM NO.	QUANTITY REQUIRED	MATERIAL DESCRIPTION/ SERVICE RATING	VENDOR/ CATALOG NO.	LOT NO. / MOD BIN / P.O. NO.
35	As Needed	3"x3"x 3/8" Angle A-36	———	Lot # 9030352 Obtain From Stock
	1	3/8 ϕ THREADED ROD (w/ 4 NUTS)		STOCK
	1	CLEVIS, FOR 2" PIPE, ADJUSTABLE, LGT. WGT	GRINNELL FIG. 65	902-7661
	1	ATTACHMENT, INFERDED BEAM, (ROD SIZE 3/8)	GRINNELL FIG. 66	902-7564

Form DG-602.1

POINT BEACH NUCLEAR PLANT
PRESSURE TEST DATA SHEET

PRETEST DATA

*Unit PB2 *Piping class DB-4
*System / Component AF / 2P29 Recirc Piping
*Design Press 1440 *Design Temp 100
Test Press
TARGET TEST PRESS TEST TEMP AMB
*MWR/SMP/IWP IWP 88-099#C.
*Other Reference

*Test Type: Hydro
Pneum
Other (Specify) X Initial Service Leak Test

*Reference Code: ASME III
B31.1 0 X
NFPA

Components/equipment within test boundary have been reviewed for pressure/temperature limits (Initials)

*Test Variance or Special Analysis/Consideration Required: (YES) / NO

Description: Impractical to Hydro Pump (See Reverse Side).

Resolution/Comments: Perform Surface Exam on all New Welds and an initial service leak test.

ISI Engineer Date

*Pretest Director Date 10/5/91

INSTRUMENTATION

Temperature Device ID:
Test Press Gage Range:
Test Press Gage ID:
(Range shall be 1.5-4 0 times test press)

*Ops Coordinator Review Date 10-22-91

PRETEST CALIBRATION

Cal Equip ID.	Ideal	As-Left
I&C Technician.		
Date		

POST-TEST CALIBRATION

Cal Equip. ID:	As-Found
I&C Technician:	
Date.	

TEST DATA (Test Gage Pressure/Backup Gage Pressure)

Target Test Pressure
*System Temperature 41 °F
*Test Pressure 1420 PSIG /
Maximum Pressure /
Minimum Pressure /

Tolerance + psig - psig
*At Test Pressure 1907 Time
Hold Time Complete 1917 Time
*Test Complete 1917 Time
Test Operator Date 11/12/91

CAUTION: Independent Verification of Restoration per PBNP 3.1.1 may be needed.

Test Director Date 11/12/91
Ops Coordinator Review Date 11-13-91
QAC Review Date 11/13/91
Comments

* Indicates data entry for initial service leak test

PBF 1912
(0-90)

Test Variance Description (cont.): The hydro was not practical because the nearest flange is on the suction side of the pump (which has a much lower design pressure) and its ability to withstand normal hydro pressure was questionable.

ASME Sect. XI was checked for guidance on pressure testing of similar class components. Per Sect. XI, Wisconsin Electric would be able to hydro the new pipe using the suction side design pressure, because the new pipe is upstream of the first off discharge isolation valve. This would result in a hydro pressure of ≤150 psig. In actuality then, the in service test will produce pressure ~10 times greater than the Section XI hydro pressure.

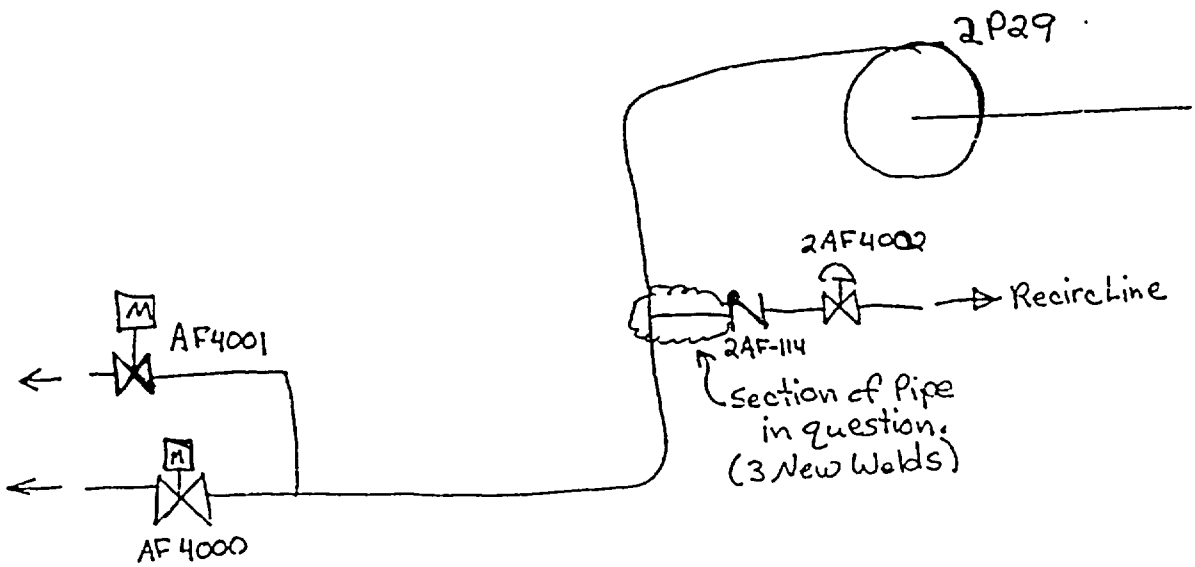

POINT BEACH NUCLEAR PLANT
PRESSURE TEST DATA SHEET

PRETEST DATA

*Unit PB2 *Piping class JG-4
*System / Component 4FW Recirc / 2P29
*Design Press ±50 *Design Temp 100
Test Press 75 80 psig
TARGET TEST PRESS 80 TEST TEMP AMB
*MWR/SMP/IWP TWP 88-099*C
*Other Reference

*Test Type: Hydro X
Pneum
Other (Specify)

*Reference Code: ASME III
B31.1.0 X
NFPA

Components/equipment within test boundary have been reviewed for pressure/temperature limits (Initials)

*Test Variance or Special Analysis/Consideration Required: YES ~~NO~~

Description: Max. Low Pt Press & < Act. Lo. Pt. Press. (SEE ATTACHED SHEET)

Resolution/Comments:

ISI Engineer Date

*Pretest Director Date 10/5/91

INSTRUMENTATION

Temperature Device ID:
Test Press Gage Range: 0-150 psig
Test Press Gage ID: OTE #13
(Range shall be 1.5-4.0 times test press)

*Ops Coordinator Review Date 10-22-91

PRETEST CALIBRATION

Cal. Equip ID. TI-9	Ideal	As-Left
I&C Technician: Mike Bruckner Jr	70	70
	80	80
Date: 10-26-91	90	90

POST-TEST CALIBRATION

Cal. Equip. ID: TI-9	As-Found
I&C Technician: B. BEYER	70
	80
Date: 10-26-91	90

TEST DATA (Test Gage Pressure/Backup Gage Pressure)

Target Test Pressure 80 psig
*System Temperature
*Test Pressure
Maximum Pressure
Minimum Pressure

Tolerance + psig - 2 psig
*At Test Pressure Time
Hold Time Complete Time
*Test Complete Time
Test Operator Date

CAUTION: Independent Verification of Restoration per PBNP 3.1.1 may be needed.

Test Director Date 10-26-91
Ops Coordinator Review Date 10-28-91
QAC Review Date 12/3/91
Comments:

* - Indicates data entry for initial service leak test

PBI 0012
(06-90)

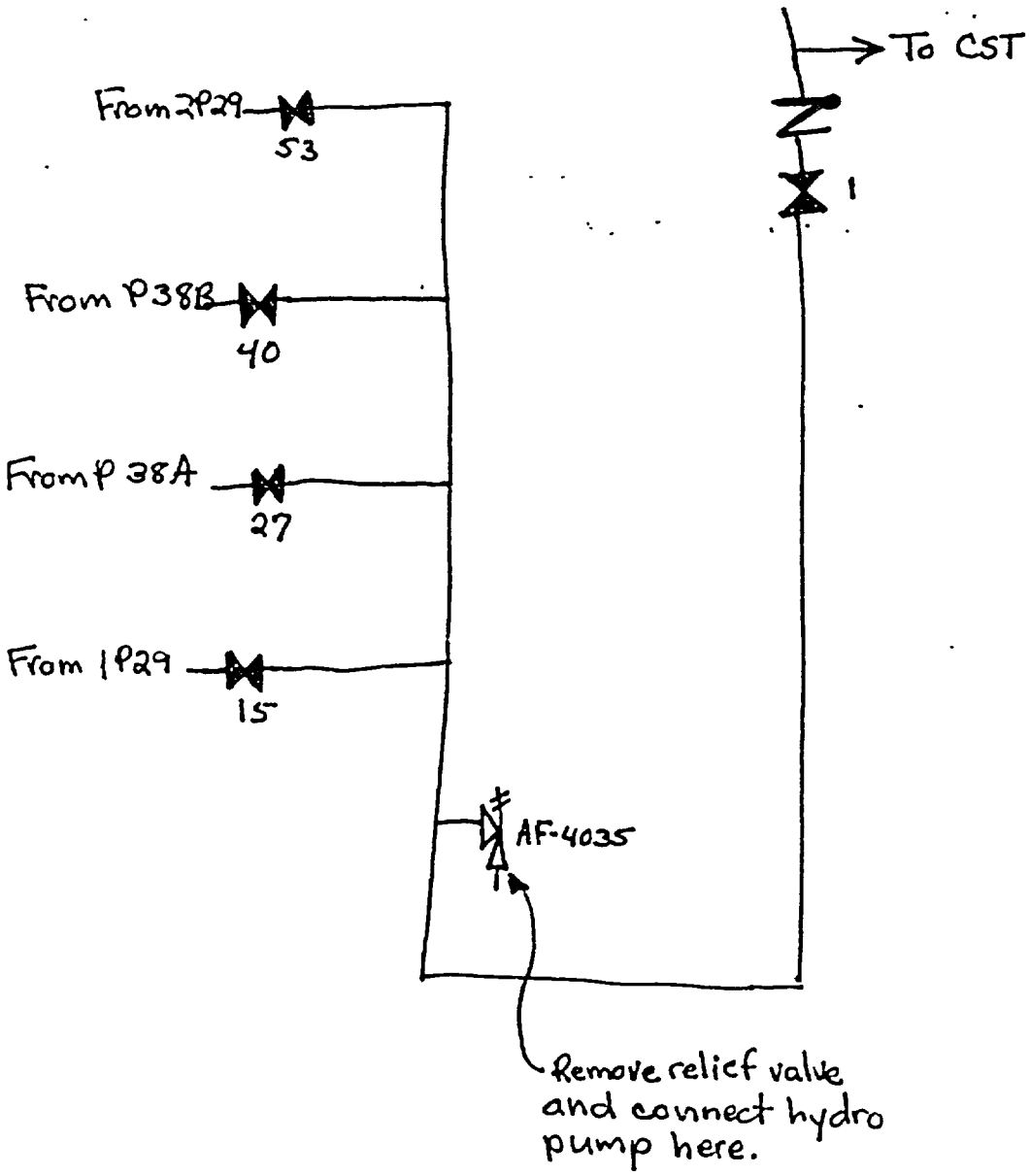
To CST
From 2P29
53
1
From P38B
40
From P 38A
27
From 1P29
15
AF-4035
Remove relief valve and connect hydro pump here.

POINT BEACH NUCLEAR PLANT

HYDROSTATIC/PNEUMATIC TEST CALCULATION SHEET

Piping Class/System/Component JG-4/AFW Recirc/2P29

NOTE: The letters "A" through "P" used in calculations are previous step designators. Use the value obtained in the indicated step.

A. *Design Pressure = Pd	50 psig
B. *Design Temperature = Td	100 deg F
Z = multiplier determined from Table 2 of PBNP 3.2.5	Z = 1.5
C. *Test Pressure = Z x A	75 psig
D. *Test Gage Range = 1.5 x C	113 psig
= 4.0 x C	300 psig
E. *Temporary Relief Valve Setpoint = 1.10 x C	83 psig
F. Lowest System Elevation	10 ft
G. Highest System Elevation	~~30~~ 20 ft
H. Test Gage Elevation	10 ~~30~~ ft
I. Elevation Correction = 0.43 x (G − H)	4.3 ~~4.3~~ ~~6.9~~ psig
J. Adjusted Test Pressure = C + I	79.3 ~~79.3~~ ~~82~~ psig
K. Additional Low Point Pressure = 0.43 x (H − F)	0 ~~0~~ ~~4.3~~ psig
L. Low Point Pressure = J + K (for gage above low point) If K is less than zero, enter zero for L.	79.3 ~~79.3~~ ~~82~~ ~~86~~ psig
M. Maximum Low Point Pressure = 1.06 x C If L > M, ~~notify the ISI Engineer~~	79.5 psig
N. System Insulated (Circle one)	YES / (NO)
O. *Pressure Hold Time (See Table 2 for hold times)	10 min/hr
P. *Rounded Adjusted Test Pressure, Step 8.1.8 (Enter on EQR-42 as Target Test Pressure)	80 psig

Comments / Notes: Final changes by [illegible] 10/22/91

Performed by: Julie Pederson Date 8-5-91

Reviewed by: [illegible] Date 10/5/91

* = applicable to pneumatic tests.

EQR-44
(5-88)

POINT BEACH NUCLEAR PLANT
PRESSURE TEST DATA SHEET

PRETEST DATA

*Unit PB2 *Piping class DB-3
*System / Component AF/2P29 Recirc Line
*Design Press 1440 *Design Temp 100
Test Press
TARGET TEST PRESS 2160 TEST TEMP AMB
*MWR/SMP/IWP IWP 88-0998 C
*Other Reference

*Test Type: Hydro X
Pneum
Other (Specify)

*Reference Code: ASME III
B31.1.0 X
NFPA

Components/equipment within test boundary have been reviewed for pressure/temperature limits SDM (Initials)

*Test Variance or Special Analysis/Consideration Required: YES / (NO)

Description:

Resolution/Comments:

ISI Engineer Date

*Pretest Director Date 11/5/91

INSTRUMENTATION

Temperature Device ID:
Test Press Gage Range: 0-5000

Test Press Gage ID: OTG.# 11
(Range shall be 1.5-4.0 times test press)

*Ops Coordinator Review Date 10-22-91

PRETEST CALIBRATION

Cal. Equip ID. TT-131
I&C Technician: Jim Quinn
Date: 10-29-91

Ideal	As-Left
2100	2100
2150	2150
2200	2200

POST-TEST CALIBRATION

Cal. Equip. ID: TT-131
I&C Technician: Brian G. Noel
Date: 11-5-91

As-Found
2100
2150
2200

TEST DATA (Test Gage Pressure/Backup Gage Pressure)

Target Test Pressure 2160
*System Temperature AMBIENT
*Test Pressure 2160 /
Maximum Pressure 2200 /
Minimum Pressure 2150 /

Tolerance + 50 psig - 100 psig
*At Test Pressure 2028 Time
Hold Time Complete 2033 Time
*Test Complete 2035 Time
Test Operator SJ Date 11-4-91

CAUTION: Independent Verification of Restoration per PBNP 3.1.1 may be needed.

Test Director Date 11/4/91
Ops Coordinator Review Date 11-5-91
QAC Review Date 12/3/91
Comments

* - Indicates data entry for initial service leak test

PBF 0042
(06-90)

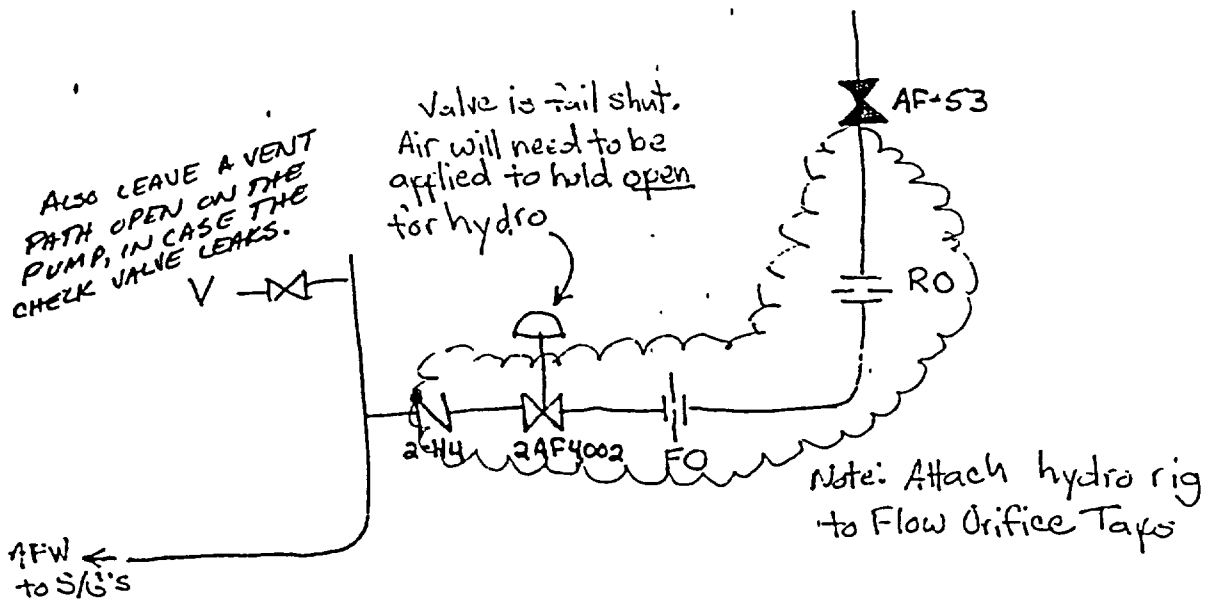
Valve is fail shut.
Air will need to be applied to hold open for hydro
AF-53
ALSO LEAVE A VENT PATH OPEN ON THE PUMP, IN CASE THE CHECK VALVE LEAKS.
V
RO
2-44
2AF4002
FO
Note: Attach hydro rig to Flow Orifice Taps
AFW to S/G's

POINT BEACH NUCLEAR PLANT

HYDROSTATIC/PNEUMATIC TEST CALCULATION SHEET

Piping Class/System/Component DB-3/AF/2P29

NOTE: The letters "A" through "P" used in calculations are previous step designators. Use the value obtained in the indicated step.

A. *Design Pressure = Pd	1440 psig
B. *Design Temperature = Td	100 deg F
Z = multiplier determined from Table 2 of PBNP 3.2.5	Z = 1.5
C. *Test Pressure = Z x A	2160 psig
D. *Test Gage Range = 1.5 x C	3240 psig
= 4.0 x C	8640 psig
E. *Temporary Relief Valve Setpoint = 1.10 x C	2376 psig
F. Lowest System Elevation	710' ft
G. Highest System Elevation	715' ft
H. Test Gage Elevation	710' ft
I. Elevation Correction = 0.43 x (G − H)	2.15 psig
J. Adjusted Test Pressure = C + I	2162 psig
K. Additional Low Point Pressure = 0.43 x (H − F)	0 psig
L. Low Point Pressure = J + K (for gage above low point) If K is less than zero, enter zero for L.	N/A psig
M. Maximum Low Point Pressure = 1.06 x C If L > M, notify the ISI Engineer	2376 psig
N. System Insulated (Circle one)	YES / NO
O. *Pressure Hold Time (See Table 2 for hold times)	10 min/hr
P. *Rounded Adjusted Test Pressure, Step 8.1.8 (Enter on EQR-42 as Target Test Pressure)	2166 psig

Comments / Notes:

Performed by: [illegible] Date 1-15-91

Reviewed by: [illegible] Date 10/5/91

* = applicable to pneumatic tests.

EQR-44
(9-88)

MR 88-099*C

SUBJECT: MWR Justification for AFW Enhancements

REFERENCE: MWRs 915320, 922033, 922034

After installation of MR 88-099*A, which increased the size of the mini-recirc line for 1P29, a number of open items were identified for future resolution.

- The actuator spring on recirc control valve was oversized. New springs were procured for our system pressures and were installed in the other 3 recirc control valves prior to their installation. MWR 922033 was initiated to install the new spring in 1AF-4002. This change has been addressed and justified in the design packages for the other three recirc lines (MR 88-099*B, *C.

- The relief valve, AF-4035, had an open discharge port and was positioned to discharge toward a stairway. MWR 915320 was initiated as a result of a safety suggestion, and proposed adding a flow director onto the valve. This proposed addition was given to Sargent and Lundy to be included in their analysis of the recirc header. Verbal acceptance was given to proceed as proposed.

- The flow orifice flanges for 1FE-4049 were initially oriented such that the taps came off of the top of the flanges. The desired location for these taps, per I&C, is at the horizontal centerline of the pipe. The remaining three recirc lines installed the flanges in the desired orientation and MWR 922034 was initiated for changing 1FE-4049. Work will be controlled per mechanical contractor's traveler and piping will be hydro'd after installation.

- Due to material availability at the time of original installation, a carbon steel manual isolation valve (AF-15) was installed in a stainless steel line. Stainless valves were installed in the recirc lines for P38A&B, but the use of a carbon steel valve was again necessary during the installation of the 2P29 recirc line.
The concern with the use of carbon steel in this system is that cavitation occurs across the restricting orifice which is just upstream of the manual valve. The specific model of valve however, has chrome trim and a stellited seat ring, making them less susceptible to erosion. Additionally, in order to replace the valves the entire recirc header would need to be removed from service, which puts the all of the AFW pumps in non-standard operating modes. Since the AFW pumps are normally not run for extended periods of time and the carbon steel valves should be able to withstand the intended service, it was decided the valve replacement would not be pursued at this time.

JUL/23