Summary

Prior to 1989, the recirculation line and it's attendant orifices may not have been explicitly recognized as Safety Related. Subsequent to the late 1990 QA audit findings, the lines and their various components up through the flow limiting orifices (with the exception of the flow indication orifices) were explicitly upgraded to Safety Related.

The various documents implementing this upgrade took as long as 3 years to be updated. There is no record however, of a reversal occurring in the QA classification of the line and components.

During the same period, there is at least one instance of docketed correspondence with the NRC stating that the minimum flow recirculation valve's do not have a safety related function to open. This position appears to have been implicitly retracted by subsequent correspondence.

Attachments

1. Annotated copy of Non-Conformance Report N-91-035
2. Annotated copy of NRC Letter to J. J. Zach dated 4/17/1992.
3. Annotated copy of VPNPD-92-271 dated 7/30/1992
4. Annotated copy of VPNPD-93-031 dated 3/2/1993
5. Annotated copy of SQRD 92-003
6. Annotated copy of QP 2-1
7. ~~Annotated excerpts from MSSM 92-12 meeting minutes~~
8. ~~Annotated excerpts of 2/8/1989 CHAMPS printout~~
9. ~~Annotated excerpts of 8/9/1993 CHAMPS printout~~

Prepared by: T. C. Kendall / R. Braenne

A/21

AFW Mini-Recirculation Line QA Classification History

1. Nuclear Power Department Noncomformance Report (NCR) N-91-035 dated 4/4/91 identified that "The controllers for the recirculation line control valves 1AF-4002, 2AF-4002, AF-4007, and AF-4014 are not safety grade. This condition was identified in the corrective action evaluation for the AFR #A-P-90-12-075." Other related issues identified in the NCR include, "If the non-safety grade recirculation system also fails, these pumps would be in a no flow condition which could render them inoperable." and "It is recommended in the evaluation of this NCR that the non-safety grade controllers that control the pump discharge valves and the recirculation line valves be upgraded to safety-grade."

2. In correspondence dated 4/17/1992 (Inservice Testing, Third 10-Year Program, Including Relief Requests), the NRC noted that the AFW recirculation valves were not tested in the open direction although a prior relief request had stated that "these valves open to ensure minimum recirculation flow from the pumps to prevent pump damage" as one of their functions. The NRC noted that the IST program should be revised to address the safety function of the valves in the open direction (Paragraph 5.25).

3. On July 30, 1992, Wisconsin Electric responded to the NRC assertions in letter VPNPD-92-271. In section F of that correspondence (VRR-28), WE stated that "Since the AF pumps are capable of delivering feedwater at any steam generator pressure, the minimum flow valves are not required to open to protect the AF pumps under any anticipated accident conditions". This sentence was embedded in a description of modifications planned or pending that would permit testing of the valves stroking in the open direction in the future. It is not clear whether there was any explicit contemporary acceptance of the statement by the NRC.

4. On March 3, 1993, Wisconsin Electric docketed letter VPNPD-93-054 citing the 7/30/1992 correspondence, providing a status of the previously mentioned modifications, and withdrawing the previous relief request VRR-28.

5. Contemporary with the above correspondence was Safety-Related and QA-Scope Reclassification Documentation (SQRD) 92-003 that was initiated for the purposes of upgrading the classification of the control solenoids, valve positioners, flow transmitters, and power supplies for the mini-recirc. flow control valves in the AFW system, which was approved on 6/25/92. The mini-recirc flow control valves (1AF-4002, 2AF-4002, AF-4007, and AF-4014) were already classified as QA Scope at this time. QP 2-1 "Safety-Related and QA-Scope Classification Upgrade or Downgrade Process" was the procedure used to perform this classification upgrade. A procedural requirement for a classification upgrade is an Engineering Evaluation. The Engineering Evaluation identified the need for recirculation flow for pump protection as well as the safety related function in the open position to provide flow for pump protection. Final acceptance from Manager's Supervisory Staff Meeting (MSSM) was required for

all upgrades, which was obtained on 6/25/92 by members attending MSSM 92-12. While this evaluation did address the 125 VDC power to the mini-recirc valve pilot solenoids, it did not recognize the non-Safety related AC power that is necessary for the circuit to function.

6. CHAMPS (data base of record) downloads from 2/06/89 and 8/09/93 indicate that all but the flow elements for the local flow control indicators (FE-04050A, FE-04050B, 1FE-04049, and 2FE-04049) were QA classified as SR. The flow elements were later classified as SR on 12/9/96. Equipment reclassifications of the AFW mini-recirc system were based on the assumption that the flow control valves will need to open for AFW pump protection (see SDR-C-0108 for classification of the mini-recirc. valve solenoids).

7. There is no history to indicate that any of the logic or power supplies driving the recirculation valve logic circuitry have been altered other than to decrease the time delay during which the minimum flow recirculation valves are held open following a pump start from 3 minutes to 45 seconds (MR 88-99).

Complete Pkg.

LIFETIME: ____ YR
NON PERMANENT ____ YR
FILE NO. Q 3.2

NUCLEAR POWER DEPARTMENT NONCONFORMANCE REPORT

2.4 NCR # N - 91 - 035

INITIATION

2.1.1 REFERENCES (Affected system, equipment, procedure, code, drawing, etc.)
FSAR Section 14.1.10 and Section 14.1.11

2.1.1 NCR BASIS CATEGORY (See Attachment QP 15-1.5)
10

2.1.2 CONDITION DESCRIPTION:
If both units require auxiliary feedwater, flow may not be automatically provided to a unit if the turbine driven auxiliary feedwater pump fails. Calculation N-90-095 (attached) provides the technical basis for this statement.

2.1.3 INITIATED BY/DATE:
CA Castell 12/17/90

2.1.5 GROUP HEAD REVIEW/DATE:
R.K. Hannemann 12/20/90

EVALUATION

2.2 REPORTABILITY AND OPERABILITY REVIEW RESULTS:

	YES	POTENTIAL	NO
10CFR21 REPORTABLE		X	X
10CFR50.72 REPORTABLE		X	X
10CFR50.73 REPORTABLE	X	X	
OTHER (SEE DCS 2.1.1)			X
TECH SPEC VIOLATION		X	X
TECH SPEC LCO		X	X
EQUIPMENT OPERABILITY IMPACT		X	X
HPES			X

2.2.8 SUPT. - RES/DATE:
[illegible] 1/22/90.

PRIORITY
2

2.3.3 EVAL. ORGANIZATION(S) ASSIGNED:
NSEAS

2.4.1 EVALUATION RESPONSE DUE DATE:
04/15/91

2.5.1 EVALUATION AND RECOMMENDED CORRECTIVE ACTION:
(Number all proposed corrective actions)

See attached evaluation and recommended Corrective action.
CACastell 4/4/91

Section 2.2 of this NCR has been revised to reflect reportability and operability judgements as documented in attached operability evaluation.
R.K. Hannemann
4/5/91

2.5.5 EVAL. GROUP HEAD/DATE:
R.K. Hannemann 4/5/91

2.6.5 QA ACCEPTANCE/DATE:
[illegible] 4/22/91

2.6.5 ADDITIONAL REVIEW/DATE:
[illegible] 5/3/91

CORRECTIVE ACTION

2.7 CORRECTIVE ACTION(S) PERFORMED:
(Refer to numbered corrective actions in Evaluation, above)

2.5.2 C/A ORGANIZATION(S) ASSIGNED:
~~NSE~~ ESE

2.5.2 CORRECTIVE ACTION DUE DATE:

ESE - To research the Increase Aux Feed Pump (electric) and Diesel Loading Calcs to Determine Acceptability

NTPD → Upgrade Controllers to Meet the QA/SR Classification [illegible] 5/20/91
Based on Information Provided NCR to Be Closed

2.7 C/A COMPLETE/DATE: (Group Head)
See GDF & RK 11

2.6 QA VERIFICATION/DATE:
[illegible]

2.6.4 TREND CODE
200

CC: (When closed): File Q3.2/SQA/NQAD/Initiator

Page ___ of ___

Form QP 15-1.1, Rev. 4

NUCLEAR POWER DEPARTMENT NONCONFORMANCE REPORT

2.4 NCR # N - 91 - 035

THIS PAGE IS A CONTINUATION OF THE INDICATED SECTION:

- [ ] 2.1.2 - Condition Description
- [ ] 2.2 - Reportability/Operability
- [X] 2.5.1 - Evaluation
- [ ] 2.7 - Corrective Action

(Initial and Date all Entries)

Evaluation of NCR N-91-035:

This NCR was generated during the corrective action evaluation for AFR #A-P-90-12-075 (copy attached). The following conditions will be addressed during the evaluation of this NCR:

1. The splitting of the flow from the electric motor driven AFW pumps that can cause one unit to receive no flow if AFW is actuated to both units. This is the condition for which this (NCR N-91-035) was written.

2. The controllers for valves AF-4012 and AF-4019 are not safety-grade. This is one of the conditions for which AFR #A-P-90-12-075 was written.

3. The controllers for the recirculation line control valves 1AF-4002, 2AF-4002, AF-4007, and AF-4014 are not safety-grade. This condition was identified in the corrective action evaluation for AFR #A-P-90-12-075.

Condition 1 (above) is very similar to the situation identified in AFR #A-P-90-12-073. AFR #A-P-90-12-073 essentially states that since the Condensate Storage Tanks (CST) are non-safety grade and non-seismic sources of water for the AFW system, it may be inappropriate to assume that AFW is available to the steam generators 1 minute after actuation of AFW. The one minute actuation time is assumed for the accident analyses in FSAR sections 14.1.10 and 14.1.11. It was shown via calculation N-91-007, Steam Generator Inventories 5 Minutes After an Earthquake, (attached) that if AFW can be initiated at 200 gpm per generator, manually, within 5 minutes, the inventory in the steam generators would not fall below the lowest inventory in the FSAR section 14.1.10 analysis.

It can be assumed that during this same 5 minutes, the operators will restore AFW flow to both units. For example, if an accident occurs that requires AFW for both units, and all the pumps have tripped due to low suction pressure caused by the loss of the CST, then the operators will need to manually restore AFW. During the restoration process, if a turbine driven AFW pump fails, the operators would be expected to use the electric motor driven AFW pumps to supply AFW to that unit. For the unit that

CACantel
4/4/91

2.6.5 / 2.6 QA REVIEW

Form CP
Rev. :

NUCLEAR POWER DEPARTMENT
NONCONFORMANCE REPORT

2.4 NCR # N - 91 - 035

THIS PAGE IS A CONTINUATION OF THE INDICATED SECTION:
- [ ] 2.1.2 - Condition Description
- [ ] 2.2 - Reportability/Operability
- [x] 2.5.1 - Evaluation
- [ ] 2.7 - Corrective Action

(Initial and Date all Entries)

the turbine driven pump did not fail, it would be expected that the turbine driven AFW pump would be used. The turbine driven AFW pump is designed to provide 200 gpm to each steam generator. By using the motor operated discharge valves to isolate one unit, the electric motor driven AFW pumps can be used to provide 200 gpm to each steam generator in the other unit. Therefore, each unit can be provided 200 gpm per steam generator within 5 minutes, as assumed for calculation N-91-007.

Calculation N-91-007 concludes that the minimum inventory in the steam generators does not go below the minimum inventory shown for the loss of feedwater accident analysis in FSAR section 14.1.10. Therefore, the conclusions in the FSAR remain valid as long as the flow split condition is correctable by the operators within 5 minutes.

Condition 2 (listed above) is essentially NCR basis category 9: IMPROPER SCOPING OF SYSTEMS, EQUIPMENT AND COMPONENTS. The failure of the electric motor driven pump discharge valves differs from the flow split condition, in that this failure would not be correctable from the control room. Thus, this failure is probably not correctable within 5 minutes. Another complication is that this flow control feature of the AFW system is not designed for manual operation.

If the non-safety grade controllers for the electric motor driven pump discharge valves causes these valves to fail shut, then it would be very difficult to restore flow from these pumps. If the non-safety grade recirculation system also fails, these pumps would be in a no flow condition which could render them inoperable. If the discharge valve controllers were safety grade, their failure could be considered essentially the same as a start failure for the pump. This would be acceptable because the design of the AFW system accounts for the failure of a pump.

Condition 3 (listed above) is essentially NCR basis category 9: IMPROPER SCOPING OF SYSTEMS, EQUIPMENT AND COMPONENTS. It is difficult to determine the significance of recirculation system non-safety grade failure. To determine the significance of the recirculation system failure, bounding AFW system flow calculations would need to be performed. An additional complication for this issue is that the Mechanical Engineering

CA Capital 4/4/91

2.6.5 / 2.8 QA REVIEW

Form QP 15-1 2
Rev. 1

group is planning to modify the recirculation system to increase the flow rate. If the recirculation system was made safety grade, it is likely that it would not be the limiting single failure, because it would not be as limiting as the failure of a pump. Therefore, if this feature was upgraded to safety-grade, then it would only be necessary to show that its failure is not worse than the failures that are currently assumed for the PBNP FSAR accident analyses. This should be done as part of the upgrade process.

Cause of NCR N-91-035:

Descriptions of the design of the AFW system are less than adequate, making it difficult to determine the adequacy of the system.

Recommended Corrective Action:

1. I recommend that the non-safety grade controllers for the electric motor driven pump discharge valves and the recirculation system be upgraded to QA and safety grade classifications. This should be assigned to the Nuclear Technical Projects Division for completion by June 30, 1992.

Evaluation of the Potential Reportability and Operability Categories:

10CFR21 Reportable:

This regulation requires licensees to report a failure to comply with the regulations, license, license conditions, or Commission orders; or the existence of a defect in a basic component if such failure to comply or defect could create a substantial safety hazard. Although this nonconforming condition can be characterized as a failure to comply with the provisions of the accident analysis which states that the auxiliary feedwater system is capable of providing auxiliary feedwater to both units in the event of a single failure and the loss of off-site power, this occurrence could not create a substantial safety hazard. Calculation N-91-007 has demonstrated that at least five minutes is available for the plant operators to isolate the feedwater

CACitel
4/4/91

2.6.5 / 2.8 QA REVIEW

flow to the unit with the operable turbine driven feedwater pump and, thus, provide sufficient flow to the other unit by means of the motor driven auxiliary feedwater pumps. This can be accomplished before the inventory in the steam generators falls below the lowest inventory assumed in the FSAR Section 14.1.10 analysis. Accordingly the provisions of this regulation are not applicable. Therefore, the 10CFR21 REPORTABLE is NO.

10CFR50.72 Reportable:

This regulation describes events requiring immediate notification and one or four hour non-emergency event notifications to the NRC. This evaluation describes a potential situation, event, or condition which has been postulated but has not occurred. Accordingly the provisions of this regulation are not applicable. Therefore, the 10CFR50.72 REPORTABLE is NO.

10CFR50.73 Reportable:

Paragraph (a)(2)(v) of this regulation requires a licensee to submit a 30 day Licensee Event Report for, "Any event or condition that alone could have prevented the fulfillment of the safety function of structure or systems that are needed to: (A) Shut down the reactor and maintain it in a safe shut down condition; (B) Remove residual heat; (C) Control the release of radioactive material; or (D) Mitigate the consequences of an accident." Paragraph (a)(2)(vi) clarifies and expands paragraph (a)(2)(v) by defining events as including, "discovery of design, analysis, fabrication, construction, and/or procedural inadequacies." The condition described in this evaluation represents a design inadequacy i.e. under the conditions defined the unit with the failed turbine driven auxiliary feedwater pump would not receive auxiliary feedwater. Since this event alone, without operator intervention, would prevent the fulfillment of this safety system to mitigate the consequences of the accident; I conclude that this event is reportable under 10 CFR 50.73 and a License Event Report should be filed with the NRC within 30 days after the approval of this evaluation. Therefore, the 10CFR50.73 REPORTABLE is YES.

CaCrutcal
4/4/91

2.6.5 / 2.8 QA REVIEW

NUCLEAR POWER DEPARTMENT NONCONFORMANCE REPORT

2.4 NCR # N - 91 - 035

THIS PAGE IS A CONTINUATION OF THE INDICATED SECTION:

- [ ] 2.1.2 - Condition Description
- [ ] 2.2 - Reportability/Operability
- [X] 2.5.1 - Evaluation
- [ ] 2.7 - Corrective Action

(Initial and Date all Entries)

Tech Spec Violation:

NO (see equipment operability impact).

Tech Spec LCO:

NO (see equipment operability impact).

Equipment Operability Impact:

The Technical Specifications define ~~of~~ operability for a system, subsystem, train, component, or device as being capable of performing its function(s) as analyzed in the safety analysis report. The FSAR in sections 14.1.10 and 14.1.11 assume that the function of the AFW system is such that the system provides flow to the steam generators at 100 gpm, 1 minute after AFW actuation. This NCR shows that the system may not be capable of performing this function. The evaluation of this NCR states that the AFW system is capable of providing sufficient flow when the flow split condition is corrected.

It was recommended in the evaluation of this NCR that the non-safety grade controllers that control the pump discharge valves and recirculation line valves be upgraded to safety-grade. The functionality of the system with these controllers can be considered adequate until this is done because of the demonstrated high reliability of these controllers during AFW system flow tests and actual demands on the AFW system. Through preliminary evaluations, I have determined that these controllers are not susceptible to a "single failure" that would incapacitate the AFW system. The only "common mode" failure that could incapacitate the AFW system is a seismic event that failed all the controllers to their worst condition. This is because their current classification is seismic class 3. I have judged that if the control systems failed due to a seismic event, the valves could be expected to go to their "fail safe" positions, because they are fail-safe, air-operated valves. This is adequate for the function of the AFW system.

Therefore, I conclude that the EQUIPMENT OPERABILITY IMPACT

CA Cartell 4/4/91

2.6.5 / 2.8 QA REVIEW

Form OP 15-1 2
Rev. 1

NUCLEAR POWER DEPARTMENT
NONCONFORMANCE REPORT

2.4 NCR # N - 91 - 035

THIS PAGE IS A CONTINUATION OF THE INDICATED SECTION:

- [ ] 2.1.2 - Condition Description
- [ ] 2.2 - Reportability/Operability
- [x] 2.5.1 - Evaluation
- [ ] 2.7 - Corrective Action

(Initial and Date all Entries)

is YES, but the system should be considered operable to perform its safety function.

CaCantell
4/4/91

2.6.5 / 2.8 QA REVIEW

Form
Rev.

Copies to Baumann, Frieling, D. Johnson, Krieser, Hanneman, R. Newton, Maercklein - REL 6/5/92

R0252

UNITED STATES
NUCLEAR REGULATORY COMMISSION
WASHINGTON, D.C. 20555

April 17, 1992

Docket Nos. 50-266
and 50-301

RECEIVED JUN 5 1992

Mr. James J. Zach, Vice President
Nuclear Power Department
Wisconsin Electric Power Company
231 West Michigan Street, Room P379
Milwaukee, Wisconsin 53201

Dear Mr. Zach:

SUBJECT: INSERVICE TESTING, THIRD 10-YEAR PROGRAM, INCLUDING RELIEF REQUESTS (TAC NOS. M79386 AND M79387)

By letters dated December 21, 1990 and June 10, 1991, Wisconsin Electric Power Company submitted the Point Beach Nuclear Plant, Units 1 and 2, Inservice Testing Program proposed for the third 10-year interval of operation. The proposed program incorporates the NRC guidance contained in Generic Letter (GL) 89-04, "Guidance on Developing Acceptable Inservice Testing Programs." The staff has reviewed and evaluated the proposed program, with particular attention given to the 52 relief requests contained in Revision 1. Our review also considered your separate responses to the generic letter.

Generic Letter 89-04 provided guidance on acceptable alternatives to Code requirements for certain aspects of inservice testing. Since a safety evaluation for the Point Beach Nuclear Plant Inservice Testing Program had not previously been issued, the generic letter requested you to review your program against the guidance provided and to make revisions as necessary to address the NRC positions in GL 89-04. On October 3, 1989, you provided the response to GL 89-04 for Point Beach Nuclear Plant with status updates provided in letters dated March 2, 1990, June 28, 1990, January 16, 1991, and April 22, 1991. A schedule for completing implementation of the guidance in GL 89-04 is included in the April 22, 1991, submittal. You should address the schedule for the Chemical and Volume Control (CVCS)-charging system which was listed but not discussed in the April 22, 1991, submittal, and should provide NRC with a completion schedule for any modifications identified as necessary to comply with GL 89-04 for all remaining open items.

The NRC staff, with technical assistance from Brookhaven National Laboratory, has reviewed and evaluated the revised IST program relief requests. The staff adopts the evaluations and conclusions contained in the Technical Evaluation Report prepared by Brookhaven and incorporates it into the Safety Evaluation by reference. The Safety Evaluation with the Technical Evaluation Report attached is enclosed.

A summary listing of the 52 relief requests is provided in Table 1 of the Safety Evaluation. The final column of this table states whether the request is denied, granted, or granted with provisions. No decision was reached on those items identified as open. We are granting relief from the testing requirements which we have determined would be impractical to

4/17/92 TER

inservice testing under the requirements of ASME Section XI. These relief requests have been reviewed to verify their technical basis and determine their acceptability. Each relief request is summarized below, along with the technical evaluation by BNL.

3.1 Auxiliary Feedwater System

3.1.1 Auxiliary Feedwater Pump Minimum Flow Valves, Relief Request No. VRR-28

3.1.1.1 *Relief Request*: The licensee has requested relief from measuring the full-stroke time of the air operated auxiliary feedwater (AFW) pump minimum flow valves, AF-4002 (Units 1 and 2), 4007 (Unit 1), and 4014 (Unit 1), in accordance with ASME Section XI, paragraph IWV-3413.

3.1.1.2 *Proposed Alternate Testing:* The licensee has proposed verifying that the valves close when the pump main line flow reaches a value which assures the pump will not be damaged. No stroke-time will be measured.

3.1.1.3 *Licensee's Basis for Requesting Relief*: "These valves are actually control valves, in that they respond to discharge flow and may actually end up in a throttled position. As control valves, according to IWV-1200, they could be exempt from testing. They do provide an important function, to shut when sufficiently large main line flows are achieved, thereby ensuring full pump capacity is available to meet any accident requirements. The appropriate acceptance criteria for these valves is to assure they respond properly to flow."

3.1.1.4 *Evaluation*: ASME, Section XI, Subsection IWV provides the rules and requirements for inservice testing of valves which are required to perform a specific function in shutting down a reactor to the cold shutdown condition or in mitigating the consequences of an accident. Paragraph IWV-1200(b) exempts only those control valves that do not have a required safety function. This position is clarified in ASME Code interpretation XI-1-83-59 and Generic Letter 89-04, Attachment 1, Position 11. These AFW pump minimum flow valves perform a safety function to close, ensuring full design flow to the steam generators and to open to provide minimum flow for pump protection. Therefore, these valves are not exempt from the requirements of Subsection IWV. Note: The IST Program currently does not require these valves to be tested open (See TER Section 5.25).

These valves operate based on the AFW pump flowrate into the steam generators. The valves' full stroke time is dependent on the AFW pump's operation, the flow logic, and the valve's condition. Measuring stroke times during AFW pump operation would not provide an accurate assessment of the valves ability to close. The licensee has stated, however, that the valves are exercised closed and fail-safe tested each cold shutdown, since AFW pump operation is not practical during plant operation. The licensee should investigate measuring full-stroke times during the cold shutdown fail-safe tests or quarterly in order to verify valve operational readiness and detect valve degradation.

Based on the determination that the valves can at least be full-stroke exercised during the fail-safe cold shutdown tests in accordance with ASME Section XI, Paragraph IWV-3412, it is recommended that relief be denied.

3.2 Auxiliary Steam, Heating Steam, Chilled and Hot Water System

3.2.1 Chilled Water Pump's Discharge Check Valves, Relief Request No. VRR-31

3.2.1.1 *Relief Request:* The licensee has requested relief from full-stroke exercising the chilled water pumps' discharge valves, HV-00898A, 0900A, 00914A and 00916A (shared Unit 1 and 2), quarterly in accordance with ASME Section XI, paragraphs IWV-3521 and 3522.

3.2.1.2 *Proposed Alternate Testing:* The licensee has proposed partial-stroke testing these valves quarterly and disassembling and inspecting each valve at least once every six years. One valve will be inspected every two years. If the disassembled valve is in a condition that would have prevented it from stroking full open, one additional valve will be inspected. If the second valve is found in a condition that would prevent it from stroking full open, the remaining two valves will be inspected.

3.2.1.3 *Licensee's Basis for Relief:* "There is no instrumentation available with which to measure system flowrate in order to satisfy the requirements of NRC Generic Letter 89-04, Position 1, for full-stroke exercising check valves."

3.2.1.4 *Evaluation:* ASME, Section XI, paragraph IWV-3522 requires, for valves that are to be tested to the open position, confirmation that the disk moves away from the seat. This can be determined by visual observation, an electrical signal initiated by a position indicating device, observation of substantially freeflow through the valve, or other positive means. The NRC staff believes that other positive means could include confirmation of valve disk position by qualified methods, including non-intrusive methods, and valve disassembly and inspection. Position 2 of Attachment 1 of NRC Generic Letter 89-04 provides the criteria for utilizing valve disassembly and inspection as an alternative to full flow testing of check valves. Partial valve stroking quarterly or during cold shutdowns is required, if possible. The NRC recommends, however, that other techniques such as non-intrusive test methods be utilized, instead of disassembly and inspection. Position 1 of Attachment 1 to NRC Generic Letter 89-04 and the response to Question 8 in the Minutes of the Public Meetings on Generic Letter 89-04 provide guidance on qualifying alternative techniques for meeting ASME Code requirements.

The licensee has proposed to utilize valve disassembly and inspection and partial stroke exercising as an alternative to full stroke exercising. The licensee's disassembly/inspection program does not comply with the criteria provided in Position 2 of the Generic Letter. The NRC guidelines for sample disassembly and inspection are as follows:

VRR-20 and 30) and other requests imply, through the referenced system drawing numbers, that the relief applies to both Units (e.g., VRR-1 and 2). The licensee should identify the applicable Unit(s) consistently and clearly. Additionally, Relief Request No. VRR-32 and the Table of Contents identifies valves 01652 and 01653 as Unit 1 valves. Appendix E lists these valves as Unit 2 valves.

5.22 Relief Request No. VRR-1 states that the relief is generic. However, it specifically lists valve MS-02082 as the only component to which it applies. The licensee should resolve this apparent inconsistency. (Reference TER Section 3.11.1.4)

5.23 Relief Request No. VRR-22 requests relief from evaluating 2 inch valves SI-00845A through F in accordance with ASME Section XI, paragraph IWV-3427(b). This paragraph is only required for valves 6 inches and greater. Therefore, relief is not required. (Reference TER Section 3.14.6)

5.24 In Relief Request No. VRR-28, the licensee has proposed in lieu of stroke testing, verifying the auxiliary feedwater pump minimum flow valve closes when the pump mainline flow reaches a value which assures the pump will not be damaged. Relief has not been recommended, since it appears that stroke tests can be performed at least during cold shutdowns in accordance with Section XI. (Reference TER Section 3.1.1)

5.25 In reviewing Relief Request No. PRR-18 and VRR-28, it was noted that valves AF-00114, 115, 116, and 117 are not addressed in the IST Program and valves AF-4002, 7 and 14 are not tested in the open position. As stated in the relief request, "these valves open to ensure minimum recirculation flow from the pumps to prevent pump damage." The program should be revised to address these valves' safety function in the open direction.

5.26 In Relief Request No. VRR-19, the licensee has proposed exercising the charging pump discharge to RCP Manual throttle valves each refueling outage. Relief is recommended provided the licensee exercises the valves closed during any cold shutdowns when the RCP are not running. (Reference TER Section 3.3.3)

5.27 In Relief Requests No. VRR-24 and 26, the licensee has proposed testing the Boric Acid Transfer Pumps' suction and discharge check valves each refueling. The licensee has not provided sufficient information and justification to demonstrate the hardship or unusual difficulty of performing the tests during cold shutdowns. Therefore, relief has not been recommended. Additionally Relief Request No. VRR-26 contains a discrepancy concerning installed flow instrumentation in the charging pump's flowpath. (Reference TER Sections 3.3.4 and 3.3.5)

5.28 In Relief Requests No. VRR-8, 9, 27, and 15 the licensee has proposed valve disassembly and inspection programs as a means to verify the valves will full-stroke

Wisconsin Electric
POWER COMPANY
231 W Michigan, PO Box 2046, Milwaukee, WI 53201

DOCUMENT RETENTION
LIFETIME _____ YRS
NON-PERMANENT _____ YRS
FILE NO. 17.3 Index
IST

(414) 221-2345

VPNPD-92-271
NRC-92-085

July 30, 1992

U. S. NUCLEAR REGULATORY COMMISSION
Document Control Desk
Mail Station P1-137
Washington, D. C. 20555

Gentlemen:

DOCKETS 50-266 AND 50-301
IN-SERVICE TESTING PUMP AND VALVE PROGRAM
THIRD 10-YEAR PROGRAM SAFETY EVALUATION REPORT
POINT BEACH NUCLEAR PLANT, UNITS 1 AND 2

Your letter dated April 17, 1992, transmitted a Safety Evaluation Report (SER) completed by the Office of Nuclear Reactor Regulation and an attached Technical Evaluation Report (TER) concerning our In-Service Test (IST) Program, third 10-year interval. The purpose of this letter is to address the IST Program relief requests which were denied in the SER and to comment on those issues included in the SER and its cover letter that we believe warrant an immediate reply. As required in the SER, we will respond to all items in the "Anomalies and Actions Items" section of the TER by April 17, 1993. Additionally, in the interim we expect to provide periodic updates on issues addressed in the SER and TER as they are resolved.

Section 2.0 of the SER addressed modifications associated with four systems: CVCS-charging, CVCS-boric acid transfer, ESF HVAC, and component cooling water. These systems and components were added to our IST Program in response to Generic Letter (GL) 89-04, "Guidance on Developing Acceptable In-Service Testing Programs." In a letter dated April 22, 1991, we committed to examine these four systems and evaluate the actions necessary to enable code required testing. We have evaluated the subject systems and have initiated modifications to facilitate the required testing. The SER required that these modifications be completed during the next scheduled refueling outage for each unit (fall 1992 Unit 2 outage and spring 1993 Unit 1 outage). The status of the subject modifications are as follows:

1. The CVCS-charging system is fully testable in accordance with our IST Program. There is no need to modify this system. We have issued test procedures which fulfill the requirements of the IST Program.

testing." As discussed in VRR-5, for IST scheduling during short duration cold shutdowns we will utilize the criteria contained in ASME/ANSI OMa-1988, Part 10, "In-Service Testing of Valves in Light-Water Reactor Power Plants;" Section 4.2.1.2.(e), "Exercising Requirements," which states that "if exercising is not practicable during operation or cold shutdowns, it may be limited to full-stroke testing during refueling outages."

E. Relief Request VRR-23, "Containment Isolation Valves," was identified as inadequate as originally submitted for NRC review. The relief request did not specify all of the valves for which relief was sought, and the alternate method of testing was not sufficiently described. The relief request has been revised to correct these deficiencies and is enclosed for NRC review (Enclosure 2). The alternate testing method described in the revised relief request is conservative and does not allow excessive leakage through any one valve to go undetected.

In-service testing of these valves will be scheduled, as necessary, upon NRC approval of our revised relief request.

F. Relief Request VRR-28, "Auxiliary Feedwater Pump Minimum Flow Valves," sought relief from measuring the full-stroke time of auxiliary feedwater (AF) pump minimum flow valves AF-4002 (Units 1&2), AF-4007 (common), and AF-4014 (common). Please note that in TER Sections 3.1.1 and 5.24, the recommended relief denial was based on the determination that the valves can be full-stroked exercised during cold shutdown testing. Air-operated stroke time tests are currently not possible, however, because the only means to manually test these valves is with a manual handwheel, which does not permit a valid time stroke test. Additionally, the fail-safe test for these valves is not performed in a traditional sense. The fail-safe test is performed during AF pump operation in which the valves are observed to return to the shut position after opening during pump start. Under ordinary conditions with the AF pumps in standby, the normal position for these valves is the same as their fail-safe position, which is shut. Consequently, a traditional fail-safe test is not required. The IST Program will be revised to reflect this fact by December 11, 1992.

A modification request has been initiated to change the configuration of the system to allow for a manual stroke of the valves using air. When this is completed, procedures

will be implemented which require stroke time testing of the valves at the frequency required by ASME, Section XI. At that time, VRR-28 will be withdrawn. This modification is currently scheduled for completion during the fall 1992 Unit 2 outage and the spring 1993 Unit 1 outage. This schedule complies with the schedule established in the SER for other modifications.

TER Section 5.25 states that the IST Program should be revised to address the AF minimum flow valves safety function in the open direction. Since the AF pumps are capable of delivering feedwater at any steam generator pressure, the minimum flow valves are not required to open to protect the AF pumps under any anticipated accident conditions. The valves will, nevertheless, be stroke time tested in the open direction, as well as in the shut direction, once the modification to permit stroke time testing is completed.

Modifications are required to conduct Code-required testing of these valves. Consequently, this testing will not be implemented until these modifications are complete. We are requesting that you grant interim relief for relief request VRR-28 until the subject modifications are completed. VRR-28 will be withdrawn during the second quarter of 1993 after completion of the subject modifications.

G. Relief Request VRR-34, "Post-Accident Containment Vent Isolation Valves," which sought an extension of the test frequency of post-accident containment vent manual valves, is formally withdrawn. Post-accident containment manual vent valves will be stroke tested during each cold shutdown. The justification for this frequency is contained in Cold Shutdown Justification (CSJ) 33 (Enclosure 3).

H. Because we have completed modifications to the residual heat removal (RHR), containment spray (CS), and safety injection (SI) systems, we are now able to formally withdraw several relief requests. We are withdrawing the following relief requests:

a. PRR-3, "Safety Injection Pumps"

b. PRR-4, "Residual Heat Removal Pumps"

c. PRR-6, "Containment Spray Pumps"

Wisconsin Electric
POWER COMPANY
231 W Michigan, PO Box 2046, Milwaukee, WI 53201
(414) 221-2345

VPNPD-93-054
NRC-93-031

March 2, 1993

Document Control Desk
U.S. NUCLEAR REGULATORY COMMISSION
Mail Station P1-137
Washington, DC 20555

Gentlemen:

DOCKETS 50-266 AND 50-301
PUMP AND VALVE INSERVICE TESTING PROGRAM
THIRD 10-YEAR PROGRAM SAFETY EVALUATION REPORT
POINT BEACH NUCLEAR PLANT, UNITS 1 AND 2

Your letter dated April 17, 1992, transmitted a Safety Evaluation Report (SER) by the Office of Nuclear Reactor Regulation and an attached Technical Evaluation Report (TER) concerning our Inservice Test (IST) Program, Third 10-Year Interval. Our initial response actions to this SER were transmitted to you in our July 30, 1992, letter (VPNPD-92-271/NRC-92-085). The purpose of this letter is to provide you with an update to our July 30, 1992, response.

In our letter of July 30, 1992, we discussed the initiation of modifications to the boric acid transfer system which would enable us to withdraw several relief requests associated with that system. Modifications to Unit 2 were completed during our Fall 1992 refueling outage. Modifications to Unit 1 are scheduled for completion during our Spring 1993 refueling outage, which will start in late March. As a result, we are withdrawing the following relief requests:

- PRR-11, "Boric Acid Transfer Pumps"
- PRR-12, "Boric Acid Transfer Pumps"
- VRR-26, "Boric Acid Transfer Pump Discharge Check Valves"

Modifications to the ESF HVAC system discussed in our letter of July 30, 1992, have been completed. The modifications provide instrumentation enabling measurement of Code required test

parameters. Since the following relief requests related to the ESF HVAC system are no longer applicable, we are withdrawing them at this time:

- PRR-15, "Cable Spreading Room Chilled Water Pumps and Control Room Chilled Water Pumps"
- VRR-31, "Chilled Water Pump Discharge Check Valves"

As discussed in our letter of July 30, 1992, we are pursuing modifications to all 4 auxiliary feedwater pump minimum flow valve control systems to enable Code required testing. Modifications to 2AF-04002 have been completed. Modifications to 1AF-04002 and non-unit specific valves, AF-04007 and AF-04014, are scheduled for completion by the end of our Spring 1993 refueling outage. Consequently at this time, we are formally withdrawing the following associated relief request:

- VRR-28, "Auxiliary Feedwater Pump Mini-Recirc Valves"

We have reevaluated Relief Request VRR-19 based on information in TER Sections 3.3.3 and 5.26. Contrary to the information stated in VRR-19, CV-00300 A&B (Units 1&2) are neither tested nor required to be tested under 10 CFR 50, Appendix J (Type C Local Leak Rate Test). These are normally open (throttled) manual valves which are not relied upon to perform any safety function. Under ASME Section XI (1986), IWV-1000, "Scope and Responsibility," these valves are not required to be tested. Consequently, they have been removed from our IST Program and we are withdrawing the following associated relief request:

- VRR-19, "Reactor Coolant Pump Seal Injection Throttle Valves"

In response to TER Sections 3.11.2 and 5.36, we have initiated modifications to replace the current auxiliary feedwater pump cooling water solenoid valves, MS-02090 (Units 1&2), with valves that have position indication. The new valves will permit stroke time testing in accordance with the Code and eliminate the need for Relief Request VRR-20. As a result, we are withdrawing the following relief request:

- VRR-20, "Auxiliary Feedwater Pump Cooling Water Supply Valves"

Our earlier letter of July 30, 1992, formally withdrew several relief requests no longer required after completion of physical modifications to various systems. In addition to the requests

PB

DOCUMENT RETENTION
LIFETIME _____ YRS
NON-PERMANENT _____ YRS
FILE NO. Q4.2

Safety-Related and QA-Scope Reclassification Documentation (SQRD)

PART 1 | DESCRIPTION : AFW Discharge Flow Control Valve Controllers | FORP # : 92-003

SCOPE OF RECLASSIFICATION:

The pressure controllers, pressure transmitters, I/P transducers, control positioners, position indicators, and the power supplies for the air operated discharge pressure control valves (AF-4012 and AF-4019) of the motor operated AFW pumps. The control solenoids, valve positioners, flow transmitters, and power supplies for the mini-recirc. flow control valves (AF-4007, AF-4014, 1AF-4002, and 2AF-4002). The complete list is attached.

CURRENT CLASSIFICATION		INTENDED CLASSIFICATION	
A. SAFETY-RELATED	☐ QA - SCOPE	A. SAFETY-RELATED	☒ QA - SCOPE
B NON - SR	☐ QA - SCOPE (AO)	B. NON - SR	☐ QA - SCOPE (AO)
C. NON - SR	☒ NON - QA - SCOPE	C. NON - SR	☐ NON - QA - SCOPE

EVALUATOR / DATE J. J. Spitz 5-15-92

GROUP HEAD / DATE Douglas E. Zoken 5/15/92

PART 2 :

MSSM REVIEW : (Meeting Number) 92-09 DATE : 5-19-92 SIGNED : [signature]

BASIS / REFERENCES : MSSM 92-11 6-16-92 (Attached)

MSS RECOMMENDED REVIEWERS : Quality Engineer
Modification Engineer

PART 3 :

FINAL ACCEPTANCE MSSM 92-12 DATE : 6-25-92 SIGNED : [signature]

PART 4 :

ALL ACTION ITEMS COMPLETED : _____ DATE : _____

RECEIVED
JUN 29 1992
POINT BEACH

COMPLETED PACKAGE :
FILE Q4.2 - (FORP #)

FORM QP 2 - 1.1
REV. 0

Initial Evaluation

Basis/Scope of Reclassification:

Historical Review/Summary of this issue:

Audit Finding Report AFR #A-P-90-12-075 identified two concerns regarding the design and qualification of the air operated discharge valves for the electric motor driven AFW pumps.

1. The electric auxiliary feed pump (P38A and P38B) discharge pressure transmitters, pressure controllers, I/P transducers, and position indicators for the air operated discharge valves AF 4012 and AF 4019, are non seismic and non-QA. Because of the non-qualified nature of the valve-controlling instrumentation, any postulated failure would be in addition to the single failure assumed during an accident analysis.

The audit recommended assessment of the adequacy of using unqualified instrumentation and upgrade of the equipment as necessary.

2. If AF 4012 and AF 4019 were to fail open, the effects of the resulting increase on diesel loading from operating the motor in an overloaded condition were not addressed.

The audit recommended that allowing these valves to fail open on a loss of instrument air pressure be reassessed.

Issue 1 Assessment Summary:

The PBNP FSAR states that the design of the AFW system for Point Beach should be such that the automatic actuation of auxiliary feedwater to both units should provide a minimum flow of 200 gpm to each unit, even after assuming the most restrictive single failure of an active safety grade component. For Point Beach, this failure is normally considered one of the turbine driven AFW (TDAFW) pumps (1P29 or 2P29) because they have the highest capacity (400 gpm each). If both units required AFW flow, and the flow control valves from P38A and P38B remain shut due to a failure of their non-safety grade controllers, then no flow would be available to the unit in which the turbine driven pump is assumed to fail. In addition, the recirculation line isolation valve controllers are also non-safety grade, and the pumps could also be without recirculation flow.

The assessment also identified an additional concern. Calculation N-90-095 showed that if the steam generator pressures in the unit with the operating turbine driven pump were about 1000 psig, and the steam generator pressures in unit without an operating turbine driven pump were about 1100 psig, the unit without the TDAFW pump would not receive any AFW flow. This situation could be rapidly corrected by the operators by

rerouting the motor driven AFW flow paths. This could be accomplished manually from the control room by using the valve control switches for the motor-driven discharge valves, located in the control room.

As a result of this assessment, NCR N-91-035 was generated due to the inability of the system to automatically provide flow as required to meet the assumptions of the FSAR accident analysis.

Issue 2 Reassessment Summary:

A static loading analysis recently performed for the EDGs showed that the diesel should be able to handle the additional power requirements. EDG Transient analysis results are pending additional information from the diesel manufacturer.

An NRC routine safety inspection conducted by Messrs. I.T. Yin, G.M. Nejfelt, and T. Tella from December 16, 1991 through January 16, 1992, noted this concern. The calculations performed were considered to be inclusive by the inspectors. The inspectors concurred with the licensee's actions to maintain the AFR open and to upgrade the discharge valve controllers by June 30, 1992.

NCR N-91-035 Summary:

In response to NCR N-91-035, calculation N-91-007 was performed. The calculations showed that adequate decay heat removal through the steam generator is still available if AFW can be manually initiated at 200 gpm per generator within 5 minutes. With one turbine driven pump unavailable, all three remaining pumps would be required at full flow in order to provide 200 gpm to each generator.

If the discharge valves were to fail shut due to a controller failure, it would be difficult to restore flow within 5 minutes (the valves are not designed for local manual operation). If the discharge valve controllers were upgraded, a failure could be considered the same as a start failure for the pump, and would not be the worst case single failure postulated for the FSAR accident analysis. If the non-safety grade recirculation line controllers were to also fail shut, the pump would be in a no-flow condition which could cause pump damage.

If in addition to the failure of one turbine driven pump, the recirculation line control valves were to fail open, flow would be taken away from the steam generators (93 gpm per motor driven pump and 126 gpm for the operating turbine driven pump). We would not be able initiate AFW flow at 200 gpm per generator within 5 minutes. If this feature were upgraded to safety-grade, it would not be the single limiting condition.

NCR N-91-035 corrective actions:

It was recommended that the non-safety grade controllers for the

electric motor driven pump discharge valves and the recirculation system be upgraded to QA and safety grade classification. This was assigned to Nuclear Technical Projects (Regulatory Affairs) for completion by June 30, 1992.

The FSAR Section 14.1.11 "Loss of All AC Power to the Station Auxiliaries," assumes the AFW system is capable of automatically providing AFW flow to each steam generator coincident with a single active failure within one minute after the initiation of the accident. Since the failure of the discharge valve controllers alone, without operator intervention, would prevent the fulfillment of this safety system to mitigate the consequences of the accident, it is reportable under 10 CFR 50.73. The NCR recommended that a License Event Report be filed with the NRC.

LER 91-001-00 "Minimum AFW Flow During Automatic Actuation," was filed on May 6, 1991. One of the corrective actions in response to the LER is to upgrade the controllers for the electric motor driven AFW pump discharge valves to QA and safety grade classifications. <u>The corrective action assigned to Regulatory Affairs was generated from this LER (CMTRK item LER 266/91-001-00 Action #1) In addition, the recirculation controllers will be upgraded. This OP 2.1 upgrade will be completed by June 30, 1992.</u>

<u>Planned Actions For Upgrade:</u>

1. An engineering evaluation of the below listed components will be performed to identify all the required actions needed to ensure that the necessary safety-related functions will perform acceptably once the reclassification is complete. The results may dictate that some or all of the components need to modified or replaced.

2. A seismic evaluation will need to be done to ensure that the components will meet seismic standards. This may be accomplished by means of a Seismic Qualification Utility Group (SQUG) Walkdown of the AFW system which is already planned. A preliminary (unofficial) walkdown will be accomplished by Mr. Harv Hanneman in early June to help determine if any changes will need to be made to meet seismic standards. A formal walkdown will be accomplished after June when additional personnel will be qualified to perform the SQUG walkdown.

3. I will also be coordinating these efforts with Mr. Mike Rosseau who is working on a modification (MR 89-127) to reroute the power supplies to the AFW discharge valve controllers to the same instrument bus as their respective loop power supplies.

Modifications to the existing hardware (if necessary) should be able to be accomplished at power as per Technical Specification 15.3.4 which allows for one of the four pumps to be taken out of service. A turbine driven AFW pump may be taken out of service

for up to 72 hours and an electric motor driven AFW pump for up to 7 days.

The following is a list of components that will be evaluated during this upgrade:

CHAMPS ID	Equipment Description
PB0 (P38A)	
AF-04007-S	P-38A AFP Mini-Recirc Control Solenoid
I/P-04012	P-38A AFP Discharge Press. Control I/P Transducer
P/P-04012	P-38A AFP Discharge Control Positioner
PT-04012	P-38A AFP Discharge Pressure Transmitter
PQ-04012	P-38A AFP Discharge Pressure Loop Power Supply
PC-04012	P-38A AFP Discharge Pressure Controller
PB0 (P38B)	
AF-04014-S	P-38B AFP Mini-Recirc Control Solenoid
I/P-04019	P-38B AFP Discharge Press. Control I/P Transducer
P/P-04019	P-38B AFP Discharge Control Positioner
PT-04019	P-38B AFP Discharge Pressure Transmitter
PQ-04019	P-38B AFP Discharge Pressure Loop Power Supply
PC-04019	P-38B AFP Discharge Pressure Controller
PB1 (1P29)	
AF-04002-S	1P29 AFP Mini-Recirc Control Valve Solenoid
PB2 (2P29)	
AF-04002-S	2P29 AFP Mini-Recirc Control Valve Solenoid

B. Full Engineering Evaluation

It is my determination, based upon existing calibration and test procedures and the excellent operating history, that the existing equipment with the exception of the I/P transducers, will function adequately in a safety related application once the reclassification and required actions have been completed.

1. Safety-Related Reclassification

Per References a-c, the AFW discharge pressure controllers and mini-recirc flow controllers, are required to function correctly to ensure the automatic initiation of auxiliary feedwater flow upon receipt of a system actuation signal. The components, along with their function and CHAMPS equipment ID are listed below.

Component

ASCO Control Solenoid Model HT8302C25; CHAMPS IDs 1(2)AF-04002-S, AF-04007-S, AF-04014-S

Function: To allow the solenoid-controlled pneumatic mini-recirc pressure control valve to reposition based upon an electrical differential pressure signal. The solenoid energizes, allowing instrument air to open the mini-recirc valve when the associated AFW pump discharge flow drops below 30 gpm and deenergizes, bleeding off air, when flow is greater than 75 gpm. The valve is designed to fail shut upon a loss of power or instrument air.

Copes Vulcan Discharge Control Positioner Model CVULC 40814; CHAMPS IDs P/P-04012, P/P-04019

Function: To reposition the motor-driven AFW pump pneumatic-operated discharge pressure control valve based upon an electrical signal, maintaining an AFW discharge pressure of 1200 psig. The valve is designed to fail open upon a loss of power or instrument air.

Foxboro Discharge Pressure Transmitter Model 611GM; CHAMPS IDs PT-04012, PT-04019

Function: To provide an accurate electrical representation of AFW pump discharge pressure to the pressure control loop.

Foxboro Discharge Pressure Controller Model 62H-UE; CHAMPS IDs PC-04012, PC-04019

Function: Properly control the electrical signals in the discharge pressure current loop.

Foxboro Discharge Pressure Loop Power Supply Model M/610A; CHAMPS IDs PQ-04012, PQ-04019

Function: Provide Power to the discharge pressure current loop.

Foxboro Discharge Pressure Control I/P Transducer Model 69 TA-1; CHAMPS IDs I/P-04012, I/P-04019

Function: To convert the electrical signal received from the controller into a representative air signal.

Safety-Related Concerns: A review of the design of existing hardware at PBNP indicates the functional requirements of NUREG-0800, IEEE 279-1971, and NUREG-0737 for safety related systems/structures/components are met with the following exceptions.

1. A field verification of the existing electrical cabling associated with the discharge pressure loop for P38A and P38B indicates that there is not an adequate channel independence (physical separation of the cabling). This does not agree with the current data in the CARDS system. The cables running from the controllers to the pressure transmitters and the I/P transducers, are routed through a common raceway. The cables will need to be routed through separate raceways to ensure a single failure will not disrupt the power supplies to these components.

2. As part of WEPCO's response to Generic Letter 89-04, "Guidance on Developing Acceptable Inservice Testing Programs," 52 relief requests were submitted. Relief Request No. VRR-28 requested relief from measuring the full stroke time of the air operated AFW pump mini-recirc valves, AF-4002 (Units 1 and 2), AF-4007 and AF-4014 in accordance with ASME Section XI paragraphs IWV-3413. WEPCO maintained that these valves were control valves, in that they respond to discharge flow, and may actually end up in a throttled position. As control valves, according to IWV-1200, they could be exempt from testing. The NRC denied the request based upon the fact that paragraph IWV-1200(b) exempts only those valves that do not have a required safety function. This position is clarified in ASME Code interpretation XI-1-83-59 and Generic Letter 89-04 which dictates these valves provide a safety function to close, ensuring full design flow to the steam generators and to open to provide flow for pump protection.

WEPCO is planning to install new model solenoids that will allow for manual actuation in order to provide a means to full stroke test these valves i.a.w. ASME Section XI requirements.

A review of Westinghouse elementary wiring diagrams indicates that both control solenoids for 1P29 and 2P29 mini-recirc discharge valves are powered from 125V DC distribution panel D12. In order to provide protection against a single failure (i.e. loss of D12), the power supplies should be modified to provide independent sources of power to both channels. The power supplies for P38A and P38B mini-recirc valve solenoids are D13 and D11 respectively. In addition, Bus D01 supplies panels D11 and D12. A loss of D01 would cause the mini-recirc valves for

both turbine driven pumps and one motor-operated AFW pump to fail shut. This could leave the pumps in an operating condition that may damage them. To eliminate this concern, I recommend that the power supplies for the mini-recirc valve solenoids associated with 1P29 and 2P29 be reconfigured to 125V DC distribution panels D31 and D41. This would provide a separate source (station battery) of DC power to each of the mini-recirc valves and ensure that a single fault would not be more severe than the worst case single fault. On the other hand, a loss of instrument air (non-safety related system) would prevent any of the mini-recirc valves from opening. This could jeopardize the operation of all four AFW pumps. Consideration should be given to modifying the configuration of these controllers. Possible solutions would be to install motor operated valves in place of the pneumatic ones, or modifying the instrument air system to provide a backup source to these controllers or the entire AFW system.

Seismic Evaluation: The seismic qualification of the AFW system at Point Beach was addressed in response to Generic Letter 81-14, "Seismic Qualification of Auxiliary Feedwater Systems, to All Operating Pressurized Water Reactor Licensees." In response to GL 81-14, WEPCO performed a seismic walkdown of the AFW system. It was indicated in the response to GL 81-14 that all portions of the system, seismic and non-seismic were looked at. All noted discrepancies from that walkdown were corrected as of 1985. To ensure the existing equipment continues to meet seismic standards, Tim Dykstra and Harv Hanneman performed a preliminary walkdown of the above listed components. No gross seismic inadequacies were found. Two concerns were noted.

Preliminary Walkdown Concerns:

1. Control room cabinet 1C105 which houses the power supply to 1AF-4012 discharge pressure control valve controller, is not bolted down. It is, however, bolted to the cabinet adjacent to it. A review of similar cabinets indicates that several of the adjacent cabinets are not actually bolted down but are bolted to adjacent cabinets. SQUG criteria dictates the row of cabinets be treated as a single unit with a minimum of eight bolts, four of which must be located on the outside corners. Cabinets 1C105 through 1C114 fail this criteria. Additional seismic criteria will have to be evaluated to determine whether or not the cabinets are adequately mounted to meet required seismic standards. When additional personnel are qualified to perform formal SQUG walkdowns (end of June 1992), these cabinets should be evaluated. If the cabinets are found to not be seismically adequate, a modification should be initiated to correct any discrepancies. Condition Report CR 92-360 has been issued to resolve this issue.

2. The solenoids and positioners for the mini-recirc valve contollers are mounted on the valve operators. Generic Implementation Procedure (GIP) for Seismic Verification of Nuclear Plant Equipment Section 3.3.3 "Rule of the Box," requires

the solenoid, operator and positioner be evaluated together as one unit ("Box"). The solenoids fail a distance criteria described in this procedure which address valve yoke stresses and yield points. However, due to the relatively small size of the solenoid, further acceptance criteria (requiring calculations) should show that the arrangement is adequate.

2. QA-Scope reclassification

In order to ensure that the existing installed items are now in a condition to perform their intended function I have performed an evaluation of the components in accordance with QP 2.1. I have used the methodology of EPRI-5652, "Guidelines for the Utilization of Commercial Grade Items in Nuclear Safety-Related Applications," which is described in QP 4-2 "Technical Evaluation of Replacement Items " as guidance. In accordance with QP 2.1, I have determined that method 4, which allows for justification of rescoping the item to QA-Scope based upon the operating performance of the item is the most appropriate method for this upgrade.

In three cases, I have determined that replacement of components/parts is necessary.

1. The mini-recirc solenoids: As per earlier discussion, these solenoids will be replaced with models that will allow for manual operation. The modification, which has not yet started, should ensure that the replacements are procured and maintained as QA-Scope components. If QA-scope solenoids suitable for this application are not available, one should be commercially dedicated per QP 4-2.

2. The Foxboro I/P pressure transducers: This model I/P transducer is now obsolete. Foxboro has indicated that they cannot repair this model because of the age and inability to obtain spare parts. QA-Scope I/P transducers suitable for this application are currently not available for procurement. A commercial grade I/P transducer will have to be dedicated using QP 4-2.

3. The Foxboro pressure transmitters: This model pressure transmitter is now obsolete. Point Beach currently has replacement parts available for this item. However, new parts for this item are not available. A SPEED or modification to replace this item should be prepared.

For the remainder of the items, I have determined that the existing items are in a condition to perform their intended function based upon the following:

Adequate Testing: The pressure transmitters, pressure controllers, I/P transducers, and valve positioners are calibrated and verified (annually) to function correctly per

I.C.P. 13.8, "Auxiliary Feedwater System." The control solenoids for the mini-recirc valves are checked through IT-290, "AFW System Check Valves & Flow Indication," which requires that the mini-recirc valves be exercised, and the positions verified as required per ASME Section II. The solenoids are also verified to function correctly via I.C.P. 4.32 which calibrates the mini-recirc discharge valve controllers. The proper functioning of the loop power supplies is assured by the satisfactory testing as described above. In addition, the exact same model of a Foxboro loop power supply is currently designated as safety-related, QA-Scope and is in use in the AFW discharge flow indication circuits.

Operating Performance:

In order to assess the current operability of these components, I have conducted a review of the operating history of these components as recorded in the CHAMPS (MWR), NPRDS, Nuclear Network and LER databases, and reviewed industry operating experience (i.e. correspondence from the NRC and INPO, vendor technical information). I have also interviewed various I&C, electrical and Site QA personnel. There have been no failures associated with a design deficiency and very few failures over the 22 year history of the plant. The failures found were caused by normal wear and tear and easily corrected. Since the pumps are tested under full flow conditions, the components will not be exposed to any new bounding conditions once they are reclassified to safety related. Based on the above considerations, it is my judgement that the installed components (exceptions noted) are currently in a condition to satisfactorily perform their intended function.

Recommendation: A comprehensive review of all spare parts must be made to ensure that once these components have been reclassified to QA-Scope, all the spare parts that could be used on affected components are properly scoped and stocked in the storeroom. In accordance with QP 2.1 this may be assigned as a follow on action item.

C. Action Items

1. A modification to the cabling for the I/P Transducers and the Pressure Transmitters associated with discharge pressure control valves AF-4012 and AF-4019, should be made to route the cabling via separate raceways. CARDS should subsequently be updated. I recommend that this item be assigned to Site Construction and Engineering.

2. A modification to the power supplies for the mini-recirc pressure control valves 1AF-4002 and 2AF-4002 should be made to power them from D31 and D41. CARDS should subsequently be updated. I recommend that this item be assigned to Electrical Systems Engineering.

3. A seismic evaluation of the cabinets associated with the discharge pressure loop power supply cabinets 1C105 and 2C105, should be conducted by Nuclear Safety.

4. As part of the planned SQUG walkdown of the instrument air (IA) system, the seismic adequacy of the AFW portions of IA system should be evaluated. If the existing IA system is found to seismically inadequate, the feasibility of a modification to provide a backup supply to the AFW systems components should be addressed. A modification to the instrument air system should be made based upon the results. The seismic adequacy evaluation should be performed by Nuclear Safety.

5. As part of the SQUG walkdown for valve operators, a calculation to show the seismic adequacy of the mini-recirc control solenoids should be peformed by Nuclear Safety.

6. The control solenoids for the mini-recirc valves 1(2)AF-4002, AF-4007, and AF-4014 should be replaced by solenoids that allow for manual full stroke testing. A modification requests have been issued for these items (MR 92-091,-092,-093) by Mechanical Systems Engineering.

7. I/P transducers for the AFW discharge pressure control loops for P38A and P38B should be commercially dedicated for use in the AFW system. A SPEED or modification request should be prepared subsequently to this action. This item should be performed by Site-QA and I&C.

8. A SPEED or modification to replace the pressure transmitters for the AFW pressure control loops for P38A and P38B should be prepared by Site-QA and I&C.

9. Site-QA should perform a comprehensive review of all spare parts issues to ensure all the spare parts that could be used on affected components are properly scoped and stocked in the storeroom.

<u>Required Documentation Updates (Recommended Group):</u>

1. Q-List/CHAMPS equipment data base (Coordinator CHAMPS)
2. NPD QA Policy Manual Appendix B (Quality Support)

D. References

a. NUREG-0800 "Standard Review Plan"

b. Point Beach FSAR Vol III 10.2

c. NUREG 0737 "Clarification of TMI Action Plan Requirements"

d. IEEE Std 603-1980 "Standard Criteria for Safety Systems for Nuclear Power Generating Stations"

e. IEEE Std 279-1971 "Criteria for Protection Systems for Nuclear Power Generating Stations"

f. AFR #A-P-90-12-075 - Auxiliary Feedwater System

g. Calculation N-90-095 - Minimum AFW Flow for Automatic Actuation to Both Units

h. NCR N-91-035

i. NRC Routine Safety Inspection Report dated Febraury 14, 1992

j. LER 91-001-00 - Minimum Auxiliary Feedwater For Automatic Actuation to Both Units

k. Generic Letter 89-04 "Guidance on Developing Acceptable Inservice Testing Programs"

l. ASME Section XI

m. Westinghouse Elementary Electrical Wiring Diagram 499B466 Sheets 313,372,369,1532,1523,869,816,

n. Piping & Instrumentation Diagram M-217

o. Generic Letter 81-14 "Seismic Qualification of Auxiliary Feedwater Systems"

p. EPRI-5652 "Guidelines for Dedication of Commercial Grade Items

q. I.C.P. 13.8 Appendix A - Auxiliary Feedwater System

r. I.C.P. 4.32 Appendix A - Auxiliary Feedwater System

s. QP 2-1 "Safety-Related and QA-Scope Classification Upgrade or Downgrade Process

t. QP 4.2 "Technical Evaluation of Replacement Items"

SQRD 92-03 Action# 1
SEISMIC EVALUATION OF INSTRUMENT AIR SUPPLY TO AF-4012 AND AF-4019 MOTOR DRIVEN AFW PUMP DISCHARGE VALVES

EVALUATION REQUEST

SQRD 92-03, AFW Discharge Flow Control Valve Controllers, reclassified the control circuit components for AF-4012 and AF-4019, motor driven AFW Pump discharge flow control valves, to safety related in response to LER 91-001-00. The reclassification was to ensure that a failure of a non-safety related component would not prevent the AFW system from performing its safety function.

Action #1 resulting from the component reclassification document is to evaluate the existing instrument air (IA) system configuration to the AFW components and if the IA system is found to be inadequate, develop corrective actions to ensure seismic adequacy.

EVALUATION SUMMARY

Instrument Air Classification and Function

Certain portions of the IA system are considered seismic class 1. This is achieved by the installation of nitrogen accumulators and check valves at the supply to certain valves which require an air supply to perform their safety related (SR) function. The remainder of the IA system is non-QA, seismic class 3. The IA system piping supports are not analyzed for seismic loading, nor is there the capability of remote isolation of any portion of the IA system.

As a result of the current seismic classification of the IA system, the focus of this evaluation is not to determine corrective actions to ensure the seismic adequacy of the IA system, but rather to evaluate whether or not an IA supply is needed to AF-4012 and AF-4019, motor driven AFW Pump discharge flow control valves, in order for the AFW system to perform its safety function.

AF-4012 and AF-4019 are Copes-Vulcan air operated globe valves. Instrument air provides control air to these valves to allow automatic control of their position in order to maintain a steady MDAFW pump discharge pressure. Upon a loss of IA, the valves fail full open. If valve failure to full open is acceptable, then it can be concluded that a loss of IA will not preclude the AFW system from performing its intended safety function.

AFW Safety Function

FSAR Section 10.2.2 states that the function of the AFW system is to supply high-pressure feedwater to the steam generators in order to maintain a water inventory for the removal of heat energy from the reactor coolant system by secondary release. The AFW system must perform its safety function while taking into account a single active failure. For the purpose of this evaluation, the limiting failure is that the turbine driven AFW pump fails to start.

Accident of Concern

In a letter to the NRC dated July 27, 1989 (reference 1), Wisconsin Electric submitted a follow up response to Generic Letter 88-14, Instrument Air Problems Affecting Safety-Related Equipment. In that letter, the scenario where a loss of IA causing AF-4012 and AF-4019 to fail open was evaluated. The main steam line break (MSLB) accident inside containment was identified as the accident of primary concern since the increase of feed water to a faulted steam generator would increase the amount of blow down to containment. This would result in a potential containment over-pressure condition. A containment pressure analysis (WE Calculation N-89-042, reference 2) concluded that, for the MSLB inside containment, the resultant containment pressure would be within the design limits of the containment structure.

A secondary affect of having AF-4012 and AF-4019 fail full open is the potential for the motor driven AFW (MDAFW) pump to operate in a run out condition. The run out condition is defined as the pump operating at a flow rate beyond the maximum flow rate on the manufacturer's pump performance curve. For the MDAFW pump, that flow rate is 500 gpm (see reference 3, attached). The high AFW flow is caused by a low AFW system head (i.e. a low steam generator pressure). The accident that results in a low steam generator pressure and thus a low AFW system head is the MSLB (FSAR Section 14.2.5). The other accidents analyzed in the FSAR which rely on the AFW system, are accidents where high steam generator pressures occur. The concern is that if the AFW pumps operate in run out, pump damage may occur. This would result in the pumps not being available to perform their function as described in FSAR Section 10.2.2.

Motor Driven AFW Pump Run Out

In a letter to Wisconsin Electric dated 10 July 1987 (reference 3), Byron Jackson Products provided pump performance curves extrapolated beyond the 500 gpm run out point. They stated that pump operation in the extrapolated region is at the user's own risk, however, if the pump NPSH and horse power are sufficient, the pumps should operate in the full range.

Calculation P-87-001 evaluates the motor driven AFW (MDAFW) pump run out when the discharge control AOV (AF-4012/AF-4019) fails open. The calculation determined that the AFW flow path from P-38B to 2HX-2B has the least flow resistance of the four MDAFW pump to steam generator flow paths, and therefore the highest flow rate with a full open discharge valve. The calculation shows that the 500 gpm run out condition will occur at a steam generator pressure of 393 psia.

For the MSLB accident, the worst case single failure is the failure of the turbine driven AFW (TDAFW) pump associated with the accident unit. A RETRAN analysis of a main steam line rupture in the "A" steam generator for PBNP Unit 1 (Calculation N-91-003, reference 4) showed that the accident steam generator pressure would decrease to 20 psia at about 50 seconds after the steam line break. The analysis also showed that the pressure in the non-accident steam generator would decrease to 370 psia at about 400 seconds. This would result in both MDAFW pumps operating in run out. WE Calculation N-89-001 extrapolated the results of calculation P-87-001 and determined that the MDAFW pump flow to a depressurized steam generator (at 15 psia) would be 616 gpm.

For evaluating pump performance and NPSH required, a conservative assumption is that the flow rate for both P-38A and P-38B, MDAFW pumps is 616 gpm. The flow rate of the MDAFW pump pumping to the intact steam generator in the accident unit would actually be lower, since the steam generator pressure would be greater than 20 psia. With the MSLB on Unit 1, 1P-29, the Unit 1 TDAFW pump is considered to have failed. The flow rate through 2P-29, the Unit 2 TDAFW pump, is expected to be the normal flow of 400 gpm. Therefore the total flow from the CST is 1632 gpm, the total expected flow for the three AFW pumps. Calculation P-87-001 shows that for a flow rate of 1800 gpm, the NPSH available from the CST, with the CST at minimum level, is 37 feet. From the pump curve (reference 3), the NPSH required for the MDAFW pump at a flow rate of 616 gpm is 37 feet. Since the maximum expected flow rate is less than 1800 gpm, the available NPSH is slightly higher.

Based on the comparison of the NPSH's, it is expected that if the MDAFW pump operated until the CST's reached there minimum level, the pumps would operate with sufficient NPSH.

AFR# A-P-90-12-075 Action #2 (reference 7) evaluated the impact of the MDAFW pump operating in run out on diesel generator loading. The evaluation determined that with the MDAFW pumps operating at 500 gpm, the MDAFW pump breakers would trip on overcurrent in about 200 seconds. Since the MDAFW pump flow rate is expected to be higher than the 500 gpm, the overcurrent trip would occur sooner than the 200 seconds. Therefore for the MSLB accident, with a loss of IA, if both MDAFW pumps were allowed to

continue to operate, it is expected that they would trip on overcurrent. The overcurrent trip is a safety trip to protect the pump motor from damage.

Since both the pump and the motor are protected from damage, the pump by having adequate NPSH and the motor by the overcurrent trip, if either MDAFW pump trips off line, it is considered available during the subsequent plant recovery to supply AFW flow to the intact steam generator.

Plant and Operator Response

In response to a faulted steam generator event (i.e. a main steam line rupture), EOP-2 directs operators to completely isolate the affected steam generator. These actions include securing steam to the affected unit's turbine driven AFW (TDAFW) pump and shutting the discharge valves of both the TDAFW pump and the MDAFW pump to the affected steam generator. The operators would also control feed flow to the affected unit's non-accident steam generator to minimize reactor coolant system (RCS) cooldown. Since during the faulted steam generator event, the operators would be taking steps to isolate and/or control feeding to the steam generators, the MDAFW pumps would not be pumping to steam generators with low pressure for extended periods. If the MDAFW pumps did trip on overcurrent, the operators would have the pump trip indication in the control room and would be able to reset the trip and restart them from the control room.

During the MSLB accident, auxiliary feedwater is not needed immediately, since decay heat is being removed from the RCS by the blow down of the faulted steam generator. The time available before the AFW flow would need to be restored to the intact steam generator on the accident unit is dependent upon the water inventory in that steam generator. For a MSLB, the intact steam generator is expected to loose inventory through the break until the main steam isolation valve (MSIV) is shut. The MSIV's are designed to shut in 5 secs. In the FSAR MSLB analysis (FSAR Section 14.2.5, Figure 14.2.5-9) the steam flow from the intact steam generator is expected to occur for about 8 seconds. The steam flow from the intact steam generator is slightly higher than 100% steam flow, about 125% steam flow. The initial inventory in the intact steam generator is assumed to be the same as the initial inventory in the Loss of Normal Feedwater analysis (FSAR Section 14.1.10), 98,000 lbm. Therefore the total amount of inventory loss during the 8 seconds is

$$1.25 \times 6{,}664{,}000 \text{ lbm/hour} \times 8 \text{ sec}/3600\text{sec} = 18{,}500 \text{ lbm.}$$

This results in a remaining inventory of 79,500 lbm.

WE Calculation N-91-007 (reference 8) demonstrates that the steam generators have the capability to remove decay heat from the RCS for 5 minutes prior to the initiation of auxiliary feedwater

flow. Decay heat removal is accomplished by the steaming of existing steam generator inventory.

For the Loss of Normal Feedwater analysis, the total steam generator inventory for the 2 steam generators in the affected unit at t=126 secs is 64,300 lbm. This is the time when AFW flow would have been initiated. In N-91-007, the total steam generator inventory drops to 43,000 lbm at t=420 prior to the initiation of AFW flow. For this evaluation, the 43,000 lbm will be considered the minimum acceptable inventory for the non-faulted steam generator.

For the MSLB accident, AFW flow is not needed until the non-faulted steam generator inventory decreases due to steam release from the steam generator safety valves. A conservative assumption is that the steaming rate for the steam generator during the MSLB is the same as the steaming rate during the Loss of Normal Feedwater. This is conservative, since it assumes that the decay heat rate is the same for both cases. The decay heat rate would be less for the MSLB accident because the reactor trip occurs earlier in the accident, and there is a longer time before steam release occurs from the non-faulted steam generator.

Using the assumption that the steaming rate is the same, the time that it would take for the non-faulted steam generator to steam to the minimum acceptable inventory of 43,000lbm is determined to be about 500 seconds.

[(79,500 - 43,000lbm)/(64,300 - 43,000lbm)] * 300 sec = 514 sec

The FSAR Section 14.2.5 MSLB analysis, Figure 14.2.5-9, shows the steam flow from the faulted steam generator as a fraction of nominal steam flow. This steam flow assumes a complete isolation of feed flow to the faulted steam generator. Figure 14.2.5-9 shows that faulted steam generator steam flow continues for at least 200 seconds after the initial steam line break. Figure 14.2.5-8 shows that the RCS Core Average Temp is at about 270 F and dropping at 200 seconds after the initial steam line break.

Based on the steam generator inventory comparison above, AFW flow would not be needed to the intact steam generator until at least 514 seconds after the faulted steam generator stopped steaming and RCS temperatures recovered. This would not occur until at least 700 seconds after the MSLB. The 700 seconds is conservatively short, since this time estimate does not include the time needed for RCS temperature to increase to the point where the non-faulted steam generator would begin steaming.

<u>Safe Shutdown Earthquake (SSE) Event</u>
Since the steam piping upstream of the main steam isolation valves is designed seismic class 1, the non-isolable steam line break is not considered to be induced by the safe shutdown

earthquake (SSE). The SSE is not considered to occur simultaneously with the steam line break. Therefore the loss of IA coincident with the steam line break would be caused by a random failure.

In the event of a safe shutdown earthquake (SSE) event, a loss of off-site power and a reactor trip of both units are expected to occur. The safety function that the AFW system would need to perform is to supply auxiliary feed water to at least one steam generator in each unit to remove decay heat.

The IA system is classified as non-QA, non-safety related and seismic class 3. The valves in the system are either manually operated valves or check valves. In the event of a break or a leak in the system, there is no way to remotely isolate it to maintain IA to AF-4012 or AF-4019.

Since IA is seismic class 3, it is considered failed during and following the SSE. With a loss of IA, the atmospheric steam dumps would not operate remotely, therefore steam generator pressure would increase to the steam generator safety setpoint due to decay heat input. If the MDAFW pump discharge valves failed open due to the loss of IA, with steam generator pressure at 1085 psig, calculation P-87-001 shows that the MDAFW pump flow rate would be 250 gpm. Calculation P-87-001 determined that MDAFW pump flow rates less than 320 gpm would not cause an overcurrent condition.

CONCLUSION

Based on the above evaluation, it is concluded that the AFW system will perform its safety function of providing feed water to the steam generators, with a loss of IA to both AF-4012 and AF-4019. If the MDAFW pumps operate in a run out condition, there is sufficient NPSH to eliminate the risk of pump damage. If the MDAFW pumps trip on overcurrent, the overcurrent trip will protect the motor from damage. Based on the initial steam generator inventories, there is sufficient time for the operators to take control of the MDAFW pump discharge valves (AF-4012/AF-4019) and then restart the MDAFW pumps.

For the SSE event, with AF-4012 & AF-4019 in the failed open position, AFW flow is still available for decay heat removal. The MDAFW pumps will not operate in run out or an overcurrent condition because of the sufficiently high pressure in the steam generators.

The existing IA configuration is satisfactory.

Timothy J. Dykstra

TIMOTHY J. DYKSTRA

REFERENCES

1. Wisconsin Electric letter to the NRC dated July 27, 1989, "Supplement to Bulletin 80-04 and to Generic Letter 88-14 Responses Point Beach Nuclear Plant, Units 1 and 2."

2. WE Calculation N-89-042, "Evaluation of PBNP Containment Pressure Response due to a Steam Line Break, Based on Results of Westinghouse Analysis," dated 11/28/90.

3. Byron Jackson Products letter to Wisconsin Electric, dated July 10, 1987, "Auxiliary Feed Water Pumps."

4. WE Calculation P-87-001, "Electric Auxiliary Feedwater Pump Runout Study," dated 5/25/87.

5. WE Calculation N-91-003, "RETRAN Analysis of a Main Steam Line Rupture in the "A" Steam Generator for PBNP Unit," dated 1/4/91.

6. WE Calculation N-89-001, "Maximum Auxiliary Feedwater Flow Rate to 1 Steam Generator," dated 5/31/90.

7. AFR# A-P-90-12-075 Corrective Action 2, dated 2/13/91.

8. WE Calculation N-91-007, "Steam Generator Inventories 5 Minutes after an Earthquake," dated 11/7/91.

NUCLEAR POWER DEPARTMENT

DOCUMENT REVIEW-REQUEST FOR COMMENTS

DOCUMENT NUMBER/TITLE:	
SQRD 92-003 AFW Quadrant Flow Control Valve Upgrade	
DOCUMENT DATE:	FILE:
REVIEW & RETURN FORM TO: Jeff Sopata	BY DATE:

ROUTING		
NAME	INITIALS	DATE
Stephen F. Mayer	SFM	6/23/92

COMMENTS (INCLUDE NAME & DATE)	RESOLUTION (INCLUDE NAME & DATE)

Form QP 17-1.2 Rev. 0

NUCLEAR POWER DEPARTMENT

DOCUMENT REVIEW-REQUEST FOR COMMENTS

DOCUMENT NUMBER/TITLE: SQRO 92-03 AFW Discharge Flow Control Valve Upgrade.	
DOCUMENT DATE:	FILE:
REVIEW & RETURN FORM TO: JLS	BY DATE:

ROUTING		
NAME	INITIALS	DATE
TIM PETTIBONE	[illegible]	22 JUNE 97

COMMENTS (INCLUDE NAME & DATE)	RESOLUTION (INCLUDE NAME & DATE)

Form QP 17-1.2 Rev. 0

Safety-Related and QA-Scope Reclassification Documentation (SQRD)

PART 1 DESCRIPTION : AFW Discharge Flow Control Valve FORP # : 92-003

SCOPE OF RECLASSIFICATION: Controllers

The pressure controllers, pressure transmitters, I/P transducers, control positioners, position indicators, and the power supplies for the air operated discharge pressure control valves (AF-4012 and AF-4019) of the motor operated AFW pumps. The control solenoids, valve positioners, flow transmitters, and power supplies for the mini-recirc. flow control valves (AF-4007, AF-4014, 1AF-4002, and 2AF-4002). The complete list is attached.

CURRENT CLASSIFICATION		INTENDED CLASSIFICATION	
A SAFETY RELATED	☐ QA - SCOPE	A. SAFETY-RELATED	☒ QA - SCOPE
B NON - SR	☐ QA - SCOPE (AO)	B NON - SR	☐ QA - SCOPE (AO)
C NON - SR	☒ NON - QA - SCOPE	C. NON - SR	☐ NON - QA - SCOPE

EVALUATOR / DATE J.J. Spitz 5-15-92 GROUP HEAD / DATE Thomas E. Gokey 5/15/92

PART 2 :

MSSM REVIEW : (Meeting Number) 92-09 DATE : 5-19-92 SIGNED : [illegible]

BASIS / REFERENCES : MSSM 92-11 6-16-92 (Attached)

MSS RECOMMENDED REVIEWERS : Quality Engineer [illegible] FOR T.J. JESSESKI 22 JUNE 92
Modification Engineer

PART 3 :

FINAL ACCEPTANCE MSSM _____ DATE : _____ SIGNED : _____

PART 4 :

ALL ACTION ITEMS COMPLETED : _____ DATE : _____

COMPLETED PACKAGE :

FILE 04.2 - (FORP #)

FORM OP 2 - 1.1
REV. 0

NUCLEAR POWER DEPARTMENT

DOCUMENT REVIEW-REQUEST FOR COMMENTS

DOCUMENT NUMBER/TITLE:	
SQRD 92-003 AFW Discharge Flow Control Valve Upgrade	
DOCUMENT DATE:	FILE:
REVIEW & RETURN FORM TO:	BY DATE:

ROUTING		
NAME	INITIALS	DATE
MICHAEL ROSSEAU	MR	6/25/92

COMMENTS (INCLUDE NAME & DATE)	RESOLUTION (INCLUDE NAME & DATE)
B.1 SAFETY RELATED CONCERNS UNTIL MR 89-127 IS COMPLETE, THE CABLES FROM THE CONTROLLERS TO THE I/P TRANSDUCERS ARE POWERED FROM THE SAME INST. BUS (WHITE). THE CABLES FROM THE TRANSMITTERS TO THE CONTROLLERS ARE POWERED AS STATED.	This concern does not effect the actions recommended in the evaluation. The evaluation will be corrected to resolve the comment. J Zbyszot 6-25-92

Form QP 17-1.2 Rev. 0

Safety-Related and QA-Scope Reclassification Documentation (SQRD)

PART 1 | DESCRIPTION : AFW Discharge Flow Control Valve Controllers | FORP # : 92-003

SCOPE OF RECLASSIFICATION:

The pressure controllers, pressure transmitters, I/P transducers, control positioners, position indicators, and the power supplies for the air operated discharge pressure control valves (AF-4012 and AF-4019) of the motor operated AFW pumps. The control solenoids, valve positioners, flow transmitters, and power supplies for the mini-recirc. flow control valves (AF-4007, AF-4014, 1AF-4002, and 2AF-4002). The complete list is attached.

CURRENT CLASSIFICATION		INTENDED CLASSIFICATION	
A SAFETY-RELATED	☐ QA - SCOPE	A. SAFETY-RELATED	☒ QA - SCOPE
B NON - SR	☐ QA - SCOPE (AO)	B. NON - SR	☐ QA - SCOPE (AO)
C NON - SR	☒ NON - QA - SCOPE	C. NON - SR	☐ NON - QA - SCOPE

EVALUATOR / DATE J. J. Spitz 5-15-92

GROUP HEAD / DATE Thomas S. Bohan 5/15/92

PART 2

MSSM REVIEW : (Meeting Number) 92-09 DATE : 5-19-92 SIGNED : [illegible]

BASIS / REFERENCES : MSSM 92-11 6-16-92 (Attached)

MSS RECOMMENDED REVIEWERS : Quality Engineer
Modification Engineer (Michael Rosseau for WBF)

PART 3 :

FINAL ACCEPTANCE MSSM _____ DATE : _____ SIGNED : _____

PART 4 :

ALL ACTION ITEMS COMPLETED : _____ DATE : _____

COMPLETED PACKAGE :

FILE 04.2 - (FORP #)

FORM OP 2 - 1.1
REV. 0

SQRD 92-03

EDMS

STATUS: CLOSED UNIT: 0 SYSTEM: INITIATED: 06/29/92 CLOSED: 02/12/98 MSS #:
INITIATOR: JEFF SOPATA ADMINISTRATOR: AARON GUENTHER ISSUE MANAGER: AARON GUENTHER
NUMBER OF OPEN ACTIONS : 0 NUMBER OF CLOSED ACTIONS : 9 TOTAL NUMBER OF ACTIONS : 9

FHC Q4.2

SQRD 92-03

Auxiliary Feedwater Discharge/Recirc Valve Controller Upgrade

DESCRIPTION:
This is the safety-related, QA-scope upgrade to the AFW discharge pressure control valve controllers. The required actions stemming from this upgrade (Ref. MSSM 92-12) will be tracked from this TRKID.

STATUS UPDATE:
(02/12/98 ALG1) All action items are closed.

SCREENED BY : PERSONDC********
DATE:
COMMITMENT.....(Y/N): N
REGULATORY REPORTABLE.....(Y/N):
TS VIOLATION.....(Y/N):
10 CFR 21.....(Y/N):
TS LCO.....(Y/N):
OPERABILITY IMPACT PER TS.(Y/N):
JCO REQUIRED.....(Y/N):
MSS REVIEW.....(Y/N):
SCAQ.....(Y/N):
OPERABILITY DETERMINATION.(Y/N):

SUPPORTING DETERMINATIONS:

REFERENCES: MSSM 92-09, LER 266/301 91-001-00, SQRD 92-03, MSSM 92-11, NCR 91-035, SQRD 92-003, MSSM 92-12, AFR A-P-90-12-075

SQRD 92-03 ACTION NUMBER 1
****

DONE		DUE DATE: 11/30/93	PRIORITY:		EXTENSIONS MADE: 1
CREATED : 08/05/92	RA	JEFF SOPATA	RECEIVED: 08/21/92	NPG	ART_LEE REIMER
WORK DONE: 11/30/93		TIMOTHY DYKSTRA	APPROVED: 12/08/93		ART_LEE REIMER
VERIFIED : 12/20/93		JEFF SOPATA	CLOSED : 12/20/93		BRUCE BERRES

Evaluate the existing instrument air system configuration to the AFW components. If found to be inadequate, develop corrective actions to ensure seismic adequacy. See MSSM 92-12.

(08/21/92 RKH) Received Action into Group: NS
Responsible Person: TJD1:TIMOTHY DYKSTRA

(08/23/93 TJD1) The draft evaluation is complete. I've given the evaluation to the PBNP system engineer for the IA system for review and comment. The evaluation looked at the IA to the AF-4012 and AF-4019 Motor Driven AFW pump flow control valves. The conclusion of the evaluation is that AF-4012 and AF-4019 can fail open due to a loss of IA and the AFW system will be able to perform its safety function. Therefore the IA system configuration does not need to be upgraded to support the SQRD 92-03 upgrade.

(09/16/93 CWK) Changed the Due Date from: 08/15/93 to 11/30/93
Per the update for this item, the evaluation and conclusion for this item has been complete and reviewed by the system engineer. The work remaining to close out this item is to document the evaluation and the associated calculation. Tim Dykstra has higher priority work to complete; the A-46 SSEL and the preparations and conduct of the A-46 walkdowns during the Unit 2 outage. Accordingly an extention request is approriate for this item.

(10/01/93 GHA) Changed cognizant PLA to Bruce Berres at Tom Jessessky's request.

(11/28/93 TJD1) Evaluation has been revised based on review by Curt Castell. Revision is being reviewed by Rick Kohrt.

(11/30/93 TJD1) Passed to ART REIMER for acceptance of work.

(12/08/93 ALR) Passed to BRUCE BERRES for Verification.
The written evaluation is submitted for review and approval. The evaluation assumed that upon a lose of IA, AF-4012 and AF-4019 would fail open. The evaluation concluded that if AF-4012 and AF-4019 failed open, the AFW system would still be able to perform its safety function. Mechanical Systems Engineering has reviewed the evaluation as part of the acceptance process.

(12/20/93 BRB) PLA set Verifier of Item to JLS:JEFF SOPATA.

(12/20/93 JLS) PLA Closure of Item.

REFERENCES: MSSM 92-09, LER 266/301 91-001-00, SQRD 92-003, MSSM 92-11, NCR 91-035, MSSM 92-12, AFR A-P-90-12-075

SQRD 92-03 ACTION NUMBER 2
****

DONE		DUE DATE: 05/31/95		PRIORITY:	20		EXTENSIONS MADE: 0
CREATED : 08/05/92	RA	JEFF SOPATA		RECEIVED:	08/21/92	NPG	ART_LEE REIMER
WORK DONE: 05/28/95		TIMOTHY DYKSTRA		APPROVED:	05/30/95		ART_LEE REIMER
VERIFIED : 05/31/95		JEFF SOPATA		CLOSED :	05/31/95		BRUCE BERRES

Verify seismic adequacy of the AFW Mini-Recirculation Control Solenoids.

(08/21/92 RKH) Received Action into Group: NS
Responsible Person: TJD1:TIMOTHY DYKSTRA

(10/01/93 GHA) Changed cognizant PLA to Bruce Berres at Tom Jessessky's request.

(05/28/95 TJD1) As a result of the Auxiliary Feedwater (AFW) Controller Upgrade, SQRD 92-03, this action item was created to verify the seismic adequacy of the AFW system mini-recirculation line isolation valve control solenoids (1AF-4002-S, 2AF-4002-S, AF-4007-S and AF-4014-S).

The methodology used to verify the seismic adequacy of these valves is that developed by the Seismic Qualification Utility Group (SQUG) for the resolution of NRC GL 87-02, USI A-46 and distributed to SQUG utilities as the SQUG Generic Implementation Procedure (GIP) for Seismic Verification of Nuclear Plant Equipment. The methodology uses data collected at industrial facilities located at earthquake sites to establish the seismic ruggedness of equipment similar to that found in nuclear generating facilities.

(05/28/95 TJD1) In accordance with the GIP methodology, the solenoid valve is considered a sub-component of the valve it controls, since the solenoid valve is mounted to the operator of the "host" valve. Therefore, the seismic verification of the mini recirculation control solenoids requires the seismic verification of the mini recirculation control valves, 1AF-4002, 2AF-4002, AF-4007 and AF-4014.

The mini recirculation control valves are Copes Vulcan 2" Air Operated Valves. The associated solenoid valves are ASCO Model HT-8302C25F solenoid valves. The air operated valves and their associated solenoids fall into the SQUG GIP equipment class #7, air operated valves. The seismic verification of these valves included a drawing review to verify valve component material and a field walkdown verification by a team of 2 seismic capability engineers meeting the background and training requirements of the SQUG GIP. The verification checked the bounding spectrum caveats and the interaction caveats as required for equipment in equipment class 7. The SCEs concluded that 1AF-4002, 2AF-4002, AF-4007 and AF-4014 including their sub-components met the inspection criteria and were seismically adequate.

The SCEs inspection notes were recorded on the draft screening evaluation worksheets at the time of the inspection. The final SEWS which are to be included in the Seismic Verification Report for the resolution of NRC GL-87-02 and USI A-46 are being developed. The final documentation will be filed in file T7.2.13 sub file 7/8 Fluid Operated, Motor Operated and Solenoid Operated valves.

Specific to the solenoid vavles, during the verificatio walkdown, the SCEs looked at the mounting of the solenoid, the flexibility of attacted electric and air lines, and the potential for damage due to interaction with adjacent of overhead equipment.

Based on the work done for the seismic verification for the resolution of USI A-46, it is concluded that the mini-recirculation control vavles and associated solenoid valves are seismically adequate at the time of the verification inspection.

(05/28/95 TJD1) The AFW mini-recirc valves and their associated solenoid valves are scoped as QA Seismic Class 1 in CHAMPS. Therefore, the proper administrative controls are in place to maintain the seismic adequacy of these valves. No additional corrective action is required resulting from this evaluation.

(05/28/95 TJD1) Passed to ART REIMER for acceptance of work.

(05/30/95 ALR) Passed to JEFF SOPATA for Verification.
The AFW system mini-recirculation valves are considered seismically adequate based on the USI A-46 seismic verification inspections. The evaluation satisfies the scope of this action item. This item is being submitted for close out.

(05/31/95 JLS) Passed to BRUCE BERRES for Final Close Out.
Verified to be acceptable.

(05/31/95 BRB) PLA Closure of Item.
Actin item completed

REFERENCES: MSSM 92-09 MSSM 92-11 MSSM 92-12
LER 266/301 91-001-00 NCR 91-035 AFR A-P-90-12-075
SQRD 92-003

SQRD 92-03 ACTION NUMBER 3
****

DONE		DUE DATE:		PRIORITY:			EXTENSIONS MADE: 0
CREATED : 08/05/92	RA	JEFF SOPATA		RECEIVED:		RA	DOUG JOHNSON
WORK DONE:		JEFF SOPATA		APPROVED:	09/01/92		PERSONDC********
VERIFIED :		PERSONDC********		CLOSED :	09/01/92		JEFF SOPATA

Modification requests 92-091, 92-092 and 92-093 were issued to replace the contol solenoids for 1&2AF-4002, AF-4007 and AF-4014, the mini-recirculation valves, to allow full stroke testing. Per SQRD 92-03, AFW Controller Safety-Related Upgade, and MSSM 92-11, the solenoids should be procured and replaced with QA-scope, Safety-Related components. Ensure that the MRs reflect the upgrade.

(08/10/92 TGS) REJECTED ACTION FROM GROUP: MSE
SUGGESTED GROUP: Mods group should be assigned this item.
(08/27/92 JLS) ISSUED TO GROUP: SCE
I believe Mark Reif may have these mods.
(08/31/92 WBF) REJECTED ACTION FROM GROUP: SCE
SUGGESTED GROUP: REASSIGN TO NTP, J.SOPATA TO REEVALUATE RECOMMENDATION. SCE REJECTS THIS AS REF. MR RESOLUTION IS TO PROVIDE IST STROKE TESTING CAPABILITY VIA BLOWDOWN AND BYPASS WHITEY VALVES (APPROACH CHOSEN IN VIEW OF SCHEDULE AND OVERALL COST). THE MOD WILL NOT REPLACE THE SUBJECT SOLENOID VALVES.
(09/01/92 JLS)
I will evaluate whether the existing solenoid valves can upgraded to safety-related.

REFERENCES:	MSSM 92-09	MSSM 92-11	MSSM 92-12
	LER 266/301 91-001-00	NCR 91-035	AFR A-P-90-12-075
	SQRD 92-003		

SQRD 92-03 ACTION NUMBER 4
****

DONE		DUE DATE: 09/30/93		PRIORITY:			EXTENSIONS MADE: 1
CREATED : 08/05/92	RA	JEFF SOPATA		RECEIVED:	11/02/92	IPE	DAVE ANDREONI
WORK DONE: 09/15/93		MICHAEL ROSSEAU		APPROVED:	09/20/93		DAVE ANDREONI
VERIFIED : 09/27/93		JEFF SOPATA		CLOSED :	09/27/93		BRUCE BERRES

Prepare appropriate documentation (SPEED or MR) to ensure I/P transducers for the AFW discharge pressure control loops for P38A&B be commercially dedicated for use in the AFW system. (See SQRD 92-03)

(10/21/92 TJJ) REJECTED ACTION FROM GROUP: SQA
SUGGESTED GROUP: eie
Controllers should be replaced. EIE should investigate alternatives and initiate appropriate SPEED or MR.
(10/23/92 JLS) Item reissued to EIE.
(11/02/92 WAH) Received Action into Group: EIE
Responsible Person: DJA:DAVID ANDREONI

(01/21/93 DJA) Changed Responsible Person: From (DJA) to (MJR1)

(03/25/93 MJR1) Requested Due Date: 09/30/93

(03/25/93 DJA) Changed the Due Date from: 03/31/93 to 09/30/93
Request new due date based on U1R20 and other higher priority work.

(09/15/93 MJR1) Passed to DAVE ANDREONI for acceptance of work.

(09/20/93 DJA) Passed to GEORGE ARGUE for Verification.
Calibration documentation and CHAMPS were reviewed to determine past performance of the Foxboro 69TA-1 I/Ps. Based on this review and discussions with I+C, performance has been excellent with only two out-of-tolerance calibrations noted since initial installation. A spare I/P is in stock (L/N 9501302). It is recommended that this spare I/P be dedicated for use in a QA application similar to the Fisher I/P dedicated by T.E. 91-083. Following dedication, it is recommended that a note be added to the CHAMPS stock description to give guidance if the spare is used (i.e. Create SPEED to use QA Fisher I/P or dedicate I/P of a different vendor).

(09/23/93 JLS) I recommend this action item be forwarded to procurement engineering for closeout verification.

(09/23/93 GHA) PLA set Verifier of Item to WJH:BILL HERRMAN.

(09/23/93 GHA) PLA set Verifier of Item to JLS:JEFF SOPATA.

(09/27/93 JLS) PLA Closure of Item.
This item is closed. An action item to dedicate the spare I/P transducer will be assigned to Procurement Engineering. See SQRD 92-03 #8.

(10/01/93 GHA) Changed cognizant PLA to Bruce Berres at Tom Jessessky's request.

REFERENCES: MSSM 92-09 | MSSM 92-11 | MSSM 92-12
LER 266/301 91-001-00 | NCR 91-035 | AFR A-P-90-12-075
SQRD 92-003

SQRD 92-03 ACTION NUMBER 5
****

DONE		DUE DATE: 09/30/93	PRIORITY:			EXTENSIONS MADE: 1
CREATED : 08/05/92	RA	JEFF SOPATA	RECEIVED:	11/02/92	IPE	DAVE ANDREONI
WORK DONE: 09/22/93		MICHAEL ROSSEAU	APPROVED:	09/28/93		DAVE ANDREONI
VERIFIED : 10/01/93		JEFF SOPATA	CLOSED :	10/01/93		BRUCE BERRES

Prepare appropriate documentation (SPEED or MR) to replace P38A&B AFW pressure control loop pressure transmitters. (See SQRD 92-03

(10/19/92 TJJ) REJECTED ACTION FROM GROUP: SQA
SUGGESTED GROUP: eie
SQA Resource restraints and Budget restraints force me to reject item.Replacement of transmitters should be controlled by Engineering.
(10/23/92 JLS) Item reissued to EIE.
(11/02/92 WAH) Received Action into Group: EIE
Responsible Person: DJA:DAVID ANDREONI

(01/21/93 DJA) Changed Responsible Person: From (DJA) to (MJR1)

(03/25/93 MJR1) Requested Due Date: 09/30/93

(03/25/93 DJA) Changed the Due Date from: 03/31/93 to 09/30/93
Request new due date based on U1R20 and other higher priority work.

(09/22/93 MJR1) Passed to DAVE ANDREONI for acceptance of work.

(09/28/93 DJA) Passed to GEORGE ARGUE for Verification.
Calibration documentation and CHAMPS were reviewed to determine past performance of AFW pressure transmitters (Foxboro part 611GM-D52). Based on this review and discussions with I+C, performance has been poor with several out-of-tolerance calibrations noted since initial installation. Spare parts are currently available on-site. However, new parts are not available from manufacturer. Based on the poor performance, it is recommended that the transmitters be replaced even though parts are in stock. SPEED 93-074 has been initiated to replace the Foxboro transmitters with Rosemount transmitters.

(09/30/93 GHA) PLA set Verifier of Item to JLS:JEFF SOPATA.

(10/01/93 GHA) Changed cognizant PLA to Bruce Berres at Tom Jessessky's request.

(10/01/93 JLS) PLA Closure of Item.

REFERENCES: MSSM 92-09 | MSSM 92-11 | MSSM 92-12
LER 266/301 91-001-00 | NCR 91-035 | AFR A-P-90-12-075
SQRD 92-003

SQRD 92-03 ACTION NUMBER 6
****

DONE		DUE DATE: 10/31/94	PRIORITY:	20		EXTENSIONS MADE: 2
CREATED : 08/05/92	RA	JEFF SOPATA	RECEIVED:	12/12/92	PE	BILL HERRMAN
WORK DONE: 10/18/94		BILL HERRMAN	APPROVED:	10/18/94		BILL HERRMAN
VERIFIED : 09/29/95		BRUCE BERRES	CLOSED :	09/29/95		WILLIE OWENS

Perform a comprehensive review of all spare parts issues to ensure all spare parts that could be used on affected AFW components are properly scoped and stocked in the storeroom. (See SQRD 92-03)

(10/21/92 TJJ) REJECTED ACTION FROM GROUP: SQA
SUGGESTED GROUP: eie
Based on other SQRD action items, this item will likely become a non-issue. If parts are replaced, then addressing proper stocking will occur during the modification and replacement. Engineering should be in control of this overall.
(10/23/92 JLS) I believe that SQA should maintain ownership of this item. When the modifications are complete, SQA should ensure the parts are stocked in the storeroom. This item refers to a comprehensive spare parts review of all the components being upgraded, not just new modifications. QP 2-1 requires this review be done.
(12/12/92 JEA) Received Action into Group: SQA
Responsible Person: TJJ:THOMAS JESSESSKY

(01/14/93 TJJ)

This item should be transferred to Bill Herrman for addressing by the Procurement Engineering group.

(01/22/93 JLS)
GEORGE ARGUE HAS BEEN CONTACTED TO FACILITATE TRANSFERRING THIS ITEM TO PROCUREMENT ENGINEERING.

(01/25/93 GHA)
Action item re-assigned to TSP per JLS and TJJ request.

(02/26/93 WJH) Changed Responsible Person: From (TSP) to (PJZ)

(03/18/93 PJZ)
Action item accepted. Evaluation in progress.

(07/29/93 JLS) Mini-recirc valve solenoids AF-04007-S, AF-04014-S, 1AF-04002-S, and 1AF-04002-S should be included with the spare parts review. These solenoids are no longer scheduled to be replaced.

(10/01/93 GHA) Changed cognizant PLA to Bruce Berres at Tom Jessessky's request.

(04/06/94 WJH) Assigned the Due Date: 08/12/94

(08/15/94 PJZ) Requested Due Date: 08/31/94

(08/15/94 WJH) Changed the Due Date from: 08/12/94 to 08/31/94
Most of the parts have been scoped. Still tracking down a few miscelaneous items to ensure they are required. Also seeking SQA concurrence on setpoint dials and knob scoping.

(08/31/94 PJZ) Requested Due Date: 10/31/94

(08/31/94 WJH) Changed the Due Date from: 08/31/94 to 10/31/94
The QA scoping has been completed. SDR-P-0062 covers the parts for PC-04012/4019. TEs are in progress to dedicate the parts which will be upgraded. See SDR-P-0062 for details.

(10/13/94 GHA) Changed Responsible Person: From (PJZ) to (WJH)
PJZ has indicated the work will remain in the PE group. PJZ has transferred to the MEG group.

(10/18/94 WJH) Passed to BILL HERRMAN for acceptance of work.

(10/18/94 WJH) Passed to BRUCE BERRES for Verification.
Evaluation is complete. Parts have been scoped. Corrective action will need to be created to either dedicate or replace existing stocked parts.

(09/29/95 BRB) PLA Closure of Item.
I verified that the review of all spare parts has been completed. SDR-P-0062 was issued to cover the scoping of the parts. An action item will be created to accomplish the following tasks: 1) write PEEs for the lots designated 2) dedicate lots which must be upgraded, or procure new parts App B. 3) update CHAMPS BOM fields

REFERENCES: MSSM 92-09 | MSSM 92-11 | MSSM 92-12
LER 266/301 91-001-00 | NCR 91-035 | AFR A-P-90-12-075
SQRD 92-003

SQRD 92-03 ACTION NUMBER 7
****

DONE		DUE DATE: 05/01/93	PRIORITY:			EXTENSIONS MADE: 2
CREATED : 08/05/92	RA	JEFF SOPATA	RECEIVED:	09/03/92	SQA	TOM JESSESSKY
WORK DONE: 04/17/93		AARON GUENTHER	APPROVED:	04/19/93		TOM JESSESSKY
VERIFIED : 04/22/93		JEFF SOPATA	CLOSED :	04/22/93		JEFF SOPATA

Update Q-list/CHAMPS equipment database to reflect the AFW controller upgrade. See SQRD 92-03 for a list of component IDs.

(09/03/92 RDM) Received Action into Group: CPS
Responsible Person: RDM:RONALD MITCHELL
(09/03/92 RDM)
This operation was completed after consultation with SQA. The proper associated records were also scoped to conform with the mentioned ones in the request.
(09/03/92 RDM)
Please close out this Item.
(09/03/92 RDM)
Correction!! Documents are in SQA's hands. Input will be completed immediately following SQA feview and approval. Do not close item.
(10/02/92 JLS)
Item reassigned to SQA.

(04/10/93 ALG1) All SDR-Cs completed and sent for approval. Greenline Diagrams have been updated (GLD 93-009 and -010).

Scoping changes will be sent to CHAMPS when approved. Checked associated power supplies, all are Safety-Related.

(04/17/93 ALG1) Passed to THOMAS JESSESSKY for acceptance of work.

(04/19/93 TJJ) Passed to JEFFREY SOPATA for Verification.
All Scoping Changes have been made to the Q-List and verified. Evaluation package has been sent to Tom Jessessky for approval and close-out.

(04/22/93 JLS) PLA Closure of Item.

IEFERENCES: MSSM 92-09 | MSSM 92-11 | MSSM 92-12
LER 266/301 91-001-00 | NCR 91-035 | AFR A-P-90-12-075
SQRD 92-003

SQRD 92-03 ACTION NUMBER 8
****

)ONE		DUE DATE: 08/31/94	PRIORITY:	20		EXTENSIONS MADE:	1
:REATED : 09/30/93	OER	GEORGE ARGUE	RECEIVED:	10/04/93	PE	BILL HERRMAN	
)ORK DONE: 08/31/94		PETER ZINGELMAN	APPROVED:	08/31/94		BILL HERRMAN	
/ERIFIED : 01/03/95		JEFF SOPATA	CLOSED :	01/03/95		BRUCE BERRES	

:ommercially dedicate spare I/P transducer -- L/N 9501302. Upon completion, inform MJS1 -- Mike Rosseau. (See SQRD 92-03 #4)

(10/01/93 GHA) Changed cognizant PLA to Bruce Berres at Tom Jessessky's request.

(10/04/93 WJH) Received Action into Group: CPE
Responsible Person: PJZ:PETER ZINGELMAN

(04/06/94 WJH) Assigned the Due Date: 08/12/94

(08/15/94 PJZ) TE 94-041 has been written to dedicate the I/P in lot 9501302.

(08/15/94 PJZ) Requested Due Date: 08/31/94

(08/15/94 WJH) Changed the Due Date from: 08/12/94 to 08/31/94
TE 94-041 has been written to dedicate the I/P. QA Approval and actual testing must be completed.

(08/31/94 PJZ) Passed to BILL HERRMAN for acceptance of work.

(08/31/94 WJH) Passed to BRUCE BERRES for Verification.
SQA is performing testing to dedicate the I/P. The I/P will be released and stocked QA when the documentation is completed. This item is complete.

(01/03/95 BRB) Passed to BRUCE BERRES for Final Close Out.
The I/C pressure converter, (950-1302), has been dedicated by SQA Material Inspection. QAR 11519 has been assigned to this part, and the part is in stock in location I2G9A1. This action item should be closed.

(01/03/95 BRB) PLA Closure of Item.
Action item completed. Lot number 950-1302 has been upgraded and dedicated for safety related use. QAR 11519 has been assigned.

IEFERENCES: MSSM 92-09 | MSSM 92-11 | MSSM 92-12
LER 266/301 91-001-00 | NCR 91-035 | AFR A-P-90-12-075
SQRD 92-003

SQRD 92-03 ACTION NUMBER 9
****

)ONE		DUE DATE: 05/01/96	PRIORITY:	-100		EXTENSIONS MADE:	2
:REATED : 09/29/95	NSS	WILLIE OWENS	RECEIVED:	10/02/95	NSS	BILL HERRMAN	
)ORK DONE: 04/22/96		THOMAS KLESPER	APPROVED:	04/23/96		BILL HERRMAN	
/ERIFIED : 02/12/98		AARON GUENTHER	CLOSED :	02/12/98		AARON GUENTHER	

1) Write PEEs for lot numbers associated with upgrade 2) Dedicate lots which must be upgraded, or procure new parts App B. 3) Update CHAMPS BOM fields (QA Y/N)

(10/02/95 WJH) Received Action into Group: NSS
Responsible Person: TJK1:THOMAS KLESPER Due Date: 01/30/96

(01/24/96 TJK1) Requested Due Date: 03/31/96

(01/24/96 WJH) Changed the Due Date from: 01/30/96 to 03/31/96
This action item recommends writing PEE's, TE's and updating CHAMPs to reflect the upgrade. Most of the parts associated with this equipment is dedicated at the time of use following NP 9.4.7. These parts do not require PEE's or new TE's. The remaining parts will be dedicated or replaced with QA parts. PEEs will be written for replaced material but parts that will be dedicated will not have PEEs written if that part has a low usage and has sufficent on-hand stock. Most of parts scoping fields in CHAMPs have been filled out for this equipment. The extention is needed to completed the TEs and procure parts that cannot be dedicated.

(03/28/96 TJK1) Requested Due Date: 05/01/96

(04/01/96 WJH) Changed the Due Date from: 03/31/96 to 05/01/96
A PE and 7 supporting CGIAP's were written for the Moore positioner linkageparts. CGIAP's have replaced TE's. These documents are currently being reviewed within NSS. I do not want to closeout this action item until these documents are approved, because the PE scopes 3 lots as non-critical that are scoped as critical in the original SDR-P.

The extra time will allow for a thorough review and any necessary corrections to either the SPR-P or PE.

(04/22/96 TJK1) Passed to BILL HERRMAN for acceptance of work.

(04/23/96 WJH) Passed to ERIC SCHULTZ for Verification.
Three items were rescoped as non-critical. The parts are not load bearing.An attachment to the SDR-P explains the rescoping. The PE and CGIA are complete and approved.

(04/23/97 GHA) PLA set Verifier of Item to JJP:JEFF POLACEK.

(04/23/97 GHA) PLA set Verifier of Item to DC:DEAN CHRISTIAN.

(02/12/98 ALG1) This action item was verifed by WILLIAM WIELGUS (per attached E-Mail).

Date: Thursday, 12 February 1998 1:02pm CT To: AARON.GUENTHER
From: WILLIAM.WIELGUS
Subject: SQRD 92-003

As we discussed, SQRD 92-003 is associated with parts for controllers for PBO F-4007, AF-4012, AF-4014, and AF-4019 and PB1/2 AF-04002.

The lot numbers for these bill of material numbers are generic and are usedfor items other than these valves and in many cases are Spec Guide 1. Having said that, all of the lot numbers I have sampled (I/P-04012 and P/C-04019) are listed as QA 'YES' (except for spare parts which revert back to the original). In speaking to Dave Dahleen, the QA 'YES' triggers a CGIAP if the part is going to be used in a Safety-Related component. The CGIAP's will not be written at this time for all of these lot numbers because they are not needed immediately and to do so would be a waste of money.

(02/12/98 ALG1) Passed to AARON GUENTHER for Final Close Out.
Work verified, see last update.

(02/12/98 ALG1) PLA Closure of Item.
All work complete, see updates dated 02/12/98.

SIGNATURES	DATES
Issue Manager:	Date:
Aaron Guenther	2/12/98

SAFETY-RELATED AND QA-SCOPE CLASSIFICATION UPGRADE OR DOWNGRADE PROCESS

(Complete rewrite)

1.0 SCOPE

1.1 This procedure describes the process to be used to reclassify existing installed structures, systems, or components (SSC) at Point Beach Nuclear Plant (PBNP) with respect to its safety-related classification and/or its QA-scope classification. The procedure describes the necessary administrative actions, required approvals and action items needed to accomplish the reclassification.

1.2 The actual engineering evaluation, conclusions and actions used to justify the reclassification can vary considerably. However, general guidance for possible approaches to these evaluations are provided in two attachments to this procedure.

1.3 This procedure applies only to installed SSC at PBNP. This process is not intended for use in upgrading existing or recently purchased spare or replacement parts. All part upgrade efforts fall into the Commercial Grade Item dedication process described in QP 4-2, "Technical Evaluation of Replacement Items". Similarly, installation of new systems or components is not covered in this procedure, but rather is covered by QP 3-1, "Modification Requests".

1.4 See Attachments QP 2-1.3 and 2-1.4 for definitions and additional guidance. It is important to note that an item's safety-related classification is primarily dependent upon what function the SSC performs with respect to the operation of the plant. This is in contrast to the QA-scope classification of an item which describes how the WE QA Program applies to how the item is procured, maintained, described, etc.

1.5 This procedure applies to both reclassification upgrades and downgrades. However, most instances of reclassification will involve upgrades, so the procedure is written from this perspective. Appropriate differences should be apparent in the procedure when a downgrade is being performed.

1.6 The need to reclassify an installed item may be identified by any NPD group through a variety of means including an Action Request, Condition Report, etc. Examples of reasons to perform a reclassification include: regulatory requirements, commitments to the NRC or other agencies, modifications to adjacent or interfacing systems, noted design deficiencies, design changes or revised safety analyses that modify the plant's licensing basis, an improper existing classification or department decisions to increase the attention associated with the reliability or function of any SSC.

2.0 PROCEDURE

2.1 When a request is initiated to reclassify some SSC, an evaluator is selected to perform the reclassification evaluation. The physical boundaries of the SSC to be reclassified must be clearly defined. The safety-related classification and/or QA-scope classification must also be clearly defined.

2.1.1 The evaluator shall prepare a list of every component that will be reclassified. using the CHAMPS equipment ID numbers for all components. This list shall be documented in Section 1 of the Safety-related and QA-Scope Reclassification Documentation (SQRD) or attached to the SQRD.

2.1.2 The evaluator shall document an initial evaluation as a concise summary of the proposed reclassification. This initial evaluation shall be attached to the "Safety-Related/QA-Scope Reclassification Documentation" (Form QP 2-1.1). The evaluator shall complete Part 1 of this form.

2.1.2.1 The SQRD number shall be obtained from the quality engineer who maintains a log of all SQRD numbers.

2.1.2.2 The basis for the reclassification shall clearly indicate the reason(s) for the reclassification and should include all references as appropriate.

2.1.2.3 The item's current and final/proposed safety-related and QA-scope classifications shall be clearly identified.

2.2 The completed initial SQRD is then routed to the evaluator's group head for review and approval. Upon approval, the evaluator shall schedule the initial SQRD for presentation at an upcoming meeting of the MSS.

2.3 The evaluator shall present the initial SQRD evaluation to the MSS. The evaluator should notify other affected individuals of the meeting, including the modification engineer, the quality engineer, and representatives of any affected work groups.

2.3.1 The presentation of the initial evaluation should assess the impact of the proposed reclassification upon plant operation and maintenance and any alternatives to the upgrade. Factors to be included in this assessment include the need for physical modifications, the necessary documentation updates and the regulatory or commitment requirements that may be directing the effort or that may be affected.

2.3.2 The MSS may require additional studies or evaluations to be conducted by the evaluator or other groups prior to MSS acceptance.

2.3.3 Upon MSS approval, the SQRD is appropriately annotated in Part 2 of the SQRD.

2.3.3.1 The MSS should discuss, and may require, the notification of some NPD groups if the nature of the reclassification may affect work in progress.

2.3.3.2 The MSS shall determine which approvals will be required prior to the presentation of the completed SQRD to the MSS. The modification engineer and the quality engineer will always be identified as reviewers. These reviewers will be listed on the SQRD, Part 2.

2.3.4 The MSS may add or delete components, or change the scope of the upgrade. The evaluator must then include those changes to Part 1 of the SQRD.

2.3.5 The MSS may decide that the upgrade is not necessary. In this case the SQRD is returned to the quality engineer and the evaluation is closed.

2.4 The evaluator proceeds with the full engineering evaluation of the reclassification to complete SQRD. The package will be assembled using Form QP 2-1.1 as a cover sheet. The content of the balance of the evaluation package will vary considerably between reclassification instances, but should follow the general format provided in Attachment QP 2-1.2. The reclassification may involve a safety-related reclassification or a QA-scope reclassification (or both). The appropriate sections listed in Attachment QP 2.1.2 may be deleted when only one type is involved.

2.4.1 The evaluator shall review the following information to assess impacts on the upgrade:

a. NUREG-0800, "Standard Review Plan" as appropriate for safety-related reclassification.

b. General Design Criteria from FSAR.

c. Design Basis documentation such as Technical file information, design and construction specifications, vendor correspondence, regulatory correspondence, etc.

d. FSAR/Technical Specification (reference sections as appropriate).

e. Procurement/specification documents.

f. Modification and machinery history records.

g. Existing information on scoping (Q-List, Q-List development files, CHAMPS, NPD QA Policy Manual, etc.).

h. Equipment history from LER's, NPRDS, CFAR, and operating experience review database.

i. NODIL

j. 10CFR50 Appendix R, "Fire Protection".

k. Environmental qualification requirements.

2.4.2 When a safety-related reclassification is involved, the intent of the engineering evaluation is to ensure that the necessary safety-related functions will perform acceptably once the reclassification and all required actions are complete. For an upgrade reclassification, it must be demonstrated that the item in question is able to perform its safety-related function under all design basis conditions.

2.4.2.1 The primary reference document to be used for this assessment will normally be NUREG-0800, "Standard Review Plan."

2.4.2.2 Use the information provided in Attachment QP 2-1.3, "Safety-Related Reclassification Guidance" and the format provided in Attachment QP 2-1.2 to prepare this portion of the package.

2.4.3 When a QA-scope reclassification is involved, the intent of the engineering evaluation should be to ensure that the existing installed item is now in a condition to perform its intended function. Specifically, in cases where an item was procured and maintained as non-QA, assurances of the item's quality must be documented, as provided for in Attachment 2.1-4, to reclassify the item as QA-scope.

2.4.3.1 The primary method to accomplish this evaluation of adequacy is contained within the CGI dedication process described in EPRI NP-5652 and implemented for NPD in QP 4-2, "Technical Evaluation of Replacement Items".

2.4.3.2 Use the guidance provided in Attachment QP 2-1.4, "Quality Reclassification Guidance" and the format provided in Attachment QP 2-1.2 to prepare this portion of the package.

2.4.4 The evaluator should clearly identify all necessary action items that will need to occur to accomplish the reclassification upon acceptance.

2.4.4.1 Each action item should be clearly described and should clearly identify any interrelationship with other action items, including if any actions need to precede or follow others.

2.4.4.2 All actions requiring only a documentation update are identified using Form QP 3-1.6, "Documentation Update and Close-Out Sheet" which will be attached to the SQRD package.

2.4.4.3 The evaluator shall recommend work-group assignments for action closeout.

2.4.5 If, at any time during the evaluation, it is determined that the scope of the reclassification must be expanded or modified, or significant changes are required or will result by the reclassification that were not previously anticipated, the evaluator should consider presenting such information to the MSS at the earliest possible point in time. Changes in scope which differ from the original reclassification scope shall be clearly identified in the final SQRD package.

2.4.6 Upon completion, the evaluator forwards the SQRD to the evaluator's group head for approval.

2.5 The group head reviews the SQRD for completeness (using Attachment QP 2-1.2 as a review guide) and for technical/engineering adequacy. Upon approval a copy of the SQRD is made for each reviewer. A copy of form QP 5.3-1 is attached to each copy and forwarded to each reviewer for approval.

2.6 Each reviewer / review group evaluates the SQRD for completeness (using Attachment QP 2-1.2 as a review guide) and for technical / engineering adequacy as appropriate. Any comments should be made in accordance with QP 5-3, "General Method for Document Review" using Forms QP 5-3.1 and 5-3.2, and attached to the package. Completed form QP 5-3.1 sheets from each reviewer should be included with the package.

2.6.1 The quality engineer reviews the package primarily for quality reclassification aspects and the effects upon QA-scope boundaries and impacts of the change.

2.6.2 The modification engineer reviews the package primarily for modification-related concerns.

2.6.3 Other reviewers / reviewing groups review the package for aspects commensurate with their expertise and responsibilities

2.6.4 Each reviewer must return the form QP 5-3.1 to the evaluator.

2.7 The evaluator addresses all comments.

2.7.1 Minor comments may be addressed after consultation with the reviewer who provided the comments.

2.7.2 Comments which may prevent the package from being approved shall be resolved and returned to the reviewer with the comment. The packages should be rerouted for approval if comments result in significant changes.

2.7.3 Upon approval by all reviewers, the evaluators shall schedule a final presentation of the SQRD before the MSS.

2.8 The evaluator shall present the final, completed SQRD to the MSS.

2.8.1 The presentation shall concisely describe the requirements for the reclassification and the basis of (and the methods used in) justifying the reclassification.

2.8.2 The evaluator shall describe all action items that need to be completed. The MSS shall verify assignment of each action item (the action item for completing Form QP 3-1.6 should normally be assigned to the individual who will monitor the closure of all items, usually the evaluator).

2.8.3 Upon acceptance of the SQRD and assignment to the responsible groups of all action items (including oversight of all further activities), MSS acceptance is annotated on the SQRD cover sheet in accordance with QP 16-4.

2.8.4 After MSS Final acceptance, the item is considered reclassified to its new classification.

2.9 The evaluator retains the original of the SQRD. A copy of the entire package shall be immediately sent to file. The various action items are completed by the assigned group.

2.10 The evaluator (or any other individual assigned responsibility) retains a coordinating, oversight role in the reclassification until all action items have been completed.

2.11 When all action items have been completed, the evaluator signs the SQRD cover sheet in Part 4 and shall forward the entire package to file for permanent retention.

3.0 REFERENCES

3.1 QP 3-1, "Modification Requests"

3.2 QP 4-2, "Technical Evaluation of Replacement Items"

3.3 QP 5-3, "General Method for Document Review"

3.4 QP 16-4, "Open Item Tracking Systems."

4.0 ATTACHMENTS

4.1 Form QP 2-1.1, "Safety-Related/QA-Scope Reclassification Documentation (SQRD), Rev.0

4.2 Attachment QP 2-1.2, "Standard SQRD Format", Rev. 0

4.3 Attachment QP 2-1.3, "Safety-Related Reclassification Guidance", Rev. 0

4.4 Attachment QP 2-1.4, "QA-Scope Reclassification Guidance", Rev. 0

4.5 Attachment QP 2-1.5, "Safety-Related/Quality Reclassification Process Flowchart", Rev. 0

Standard SQRD Format

A. Initial Assessment Evaluation

- Basis
- Identification of Scope - all CHAMPS equipment IDs involved
- Estimate of Involved Effort

B. Full Engineering Evaluation

- Safety-Related Reclassification
- QA-Scope Reclassification

C. Action Items

- Documentation Updates (use Form QP 3-1.6)
- other

D. References

Safety-Related and QA-Scope Reclassification Documentation (SQRD)

PART 1	DESCRIPTION :	FORP # :

SCOPE OF RECLASSIFICATION :

CURRENT CLASSIFICATION		INTENDED CLASSIFICATION	
A SAFETY-RELATED	☐ QA - SCOPE	A. SAFETY-RELATED	☐ QA - SCOPE
B NON - SR	☐ QA - SCOPE (AQ)	B. NON - SR	☐ QA - SCOPE (AQ)
C. NON - SR	☐ NON - QA - SCOPE	C NON - SR	☐ NON - QA - SCOPE

EVALUATOR / DATE _____ GROUP HEAD / DATE _____

PART 2 :

MSSM REVIEW : (Meeting Number) _____ DATE : _____ SIGNED : _____

BASIS / REFERENCES .

MSS RECOMMENDED REVIEWERS

PART 3 .

FINAL ACCEPTANCE MSSM _____ DATE : _____ SIGNED : _____

PART 4 :

ALL ACTION ITEMS COMPLETED _____ DATE : _____

COMPLETED PACKAGE :

FILE Q4 2 - (FORP #)

FORM QP 2 - 1.1
REV. 0

SAFETY-RELATED RECLASSIFICATION

Scope

This attachment provides guidance for performing a full engineering evaluation to change the safety-related classification of a structure, system or component (SSC).

Definitions

Safety-Related (SR) classification is defined in NPD QAPM Appendix B

Non Safety-Related (NSR): All other items.

Functional requirements are the requirements incorporated in the design of an SSC that provide assurances that it will perform its safety function. These requirements include redundancy of components, emergency power, environmental qualification, seismic qualification, protection against natural phenomena, protection against single failure, etc. Additionally, functional requirements include the acceptable ranges of performance for the SSC. These requirements are contained in functional requirement source documents. (Note: The method for evaluating quality standards and records requirements is contained in Attachment QP 2-1.4).

Functional requirement source documents are documents that provide guidance for determining the safety-related functional requirements of an SSC, These include the Code of Federal Regulations, NUREGs, Reg Guides, the NRC Standard Review Plan, the PBNP FSAR, procurement specifications, ASME Codes and Standards, etc.

Evaluation Guidance

1. The evaluator shall compare the function of the SSC to the functional requirements contained in functional requirement source documents. The primary reference/guidance document to be used in this comparison will normally be NUREG-0800, "Standard Review Plan." This comparison should be documented by the evaluator by citing and referencing the functional requirements and stating how the SSC does or does not meet the requirement.

2. The evaluator shall judge or determine if the SSC needs to meet the functional requirements that it does not meet. This judgement or determination should be documented for each functional requirement that the SSC does not meet.

3. If any functional requirement of the SSC cannot be found, it should be generated or obtained by the evaluator during the full engineering evaluation or listed as a recommendation to generate or obtain it. The functional requirements for system performance (acceptable ranges for temperature, pressure, and flow rate in fluid systems) are typically difficult to find.

4. The evaluator shall generate a list of recommendations to resolve the functional requirements that the SSC does not meet and to generate or obtain any functional requirements that cannot be found.

5. The evaluator should recommend work group assignments for each item on the list of recommendations.

QA-SCOPE RECLASSIFICATION GUIDANCE

Definitions

The QA-scope classification of an item describes the applicability of the WE Quality Assurance program to the system, subsystem, or component. This applicability is based upon the item's functional classification (safety-related or non-safety-related) as well as any commitments of department decisions which may apply an "augmented quality" (AQ) level of quality to a given item (refer to NPD QA Policy Manual Appendix B). The two major classifications are as follows:

QA-Scope
Any item controlled within all or part of the WE Quality Assurance Program. Within this classification are two important subsets:

QA-Scope - Safety-Related
These items are treated within the entire WE Quality Assurance Program which meets all the requirements of 10CFR50 Appendix B as described in the NPD QA Policy Manual.

QA-Scope - Augmented-Quality
All non-safety-related items to which a specific commitment or decision has been made to apply all or portions of the WE Quality Assurance Program, even though the items are non-safety-related and not required by 10CFR50 Appendix B itself to be considered QA-Scope.

Non-QA-Scope
All other items.

Evaluation Guidance

1. Upgrades

Upgrading an item to QA-Scope may or may not be accomplished in conjunction with an upgrade to safety-related status (as described in Attachment QP 2-1.3).

The process of upgrading the SSC to QA-Scope involves two major steps. First, a justification is prepared to support that the existing item is of sufficient quality as if the item were to be purchased as a QA-Scope item presently. And second, it must be ensured that all appropriate administrative controls within the QA program are now, and henceforth, applied to the item.

First, an engineering evaluation must be performed to justify that an item previously procured and maintained as non-QA may now be treated a QA-Scope. In the cases of items intended to be classified as "QA-Scope - Safety-Related" items, the item's ability to perform it's required safety function must be validated. In the

cases where the item will now become classified as "QA-Scope - Augmented Quality", the item must validated as able to perform it's function commensurate with the commitment or decision that requires it to now be considered as AQ.

The most appropriate means of performing this evaluation, and documenting the results is very similar in nature to the process of dedicating commercial grade items (CGI) for safety-related use, as described in EPRI NP-5652. This process is covered by QP 4-2 and describes acceptable methods for procuring CGI (effectively as non-QA) and "dedicating" them for use in safety-related applications (QA). This process can be translated and used in this procedure to justify the reclassification of an existing non-QA item to QA-Scope classification.

Referring to QP 4-2, the evaluator must determine which of the four methods presented in EPRI-5652 and QP 4-2 will be most appropriate for performing the upgrade. A decision will also need to be made if a single Technical Evaluation (TE) will be prepared using the guidance in QP 4-2, or whether multiple TEs will be needed. It is recommended that as few TEs as possible be generated, depending upon the types of components being upgraded and complexity of the system. Of the methods presented in QP 4-2, methods 1b and 4 will be the predominant methods to be used.

Method 4 allows for justification of rescoping the item to QA-Scope based upon the operating performance of the item and the performance of individual parts within the item. This method should only be relied upon if it can be justified that the item has been exposed to bounding conditions, parameters, and environmental limits that it would not be expected to perform under due to its new classification. Machinery history, NPRDS data, CHAMPS MWR and PM records, and RCM information should be gathered in an attempt to justify that the system, subsystem, or component has proven its ability to carry out the functions for which it will now be credited.

In cases where past operating performance cannot conclusively demonstrate required justification, special tests or inspections of the existing equipment may be performed, using Method 1b as a basis Method 1b tests and/or inspections of installed, existing equipment may include non-destructive testing (NDE), hydrostatic or pneumatic testing, calibration or burn-in tests, or any number of other tests/inspections that will subject the item to the bounding conditions, parameters, and environmental limits that the system, subsystem, or component will need to operate under for which it will now be credited.

If these described methods cannot justify the reclassification to QA-Scope, the item(s) in question may have to be modified and/or replaced (under the provisions of QP 3-1, 4-1, and/or 4-3) to ensure that the item can be reclassified to QA-Scope status.

For all QA-Scope upgrades, a crucial consideration in the upgrade process concerns the status and classification of any spare parts that are stocked for the

component(s) that will be upgraded to QA-Scope status. A comprehensive review of all spare parts issues must be made as part of the evaluation or as an action item, to ensure that once a system, subsystem, or component has been reclassified to QA-Scope, that all the spare parts that could be used on affected components are properly scoped and stocked in the Storeroom. In some cases, extensive upgrading of spare parts may constitute the largest part of the upgrade process, including the possible scrapping of spare parts after new, qualified parts have been ordered and/or dedicated.

Documentation updates for QA-Scope upgrades should include, as a minimum, the Q-List/CHAMPS equipment data base and the NPD QA Policy Manual Appendix B.

2. Downgrades

Downgrading an item from QA-Scope to non-QA can readily be accomplished. No special requirements for a downgrade need apply, the process effectively entails reducing the administrative controls that apply to the treatment of the item.

Care should be taken to ensure that all factors have been considered before a system, subsystem, or component is removed from the QA program. Besides ensuring that the subject has been properly justified as non-safety-related, a thorough review must be performed to ensure that no commitments or decisions were made since the item was put into service that requires the item to be considered QA-Scope, or sufficient justification and authority to take exception to, or reverse, such commitments and/or decisions referenced in the SQRD package.

Any stock items that support the item to be downgraded should be reviewed to determine if they, too, can be downgraded to non-QA status, or whether the parts in question might still be used in similar applications that remain within the QA program, and will thus typically be stocked only as QA-Scope parts.

Appropriate documentation updates must occur, including, as a minimum, the Q-List/CHAMPS data base and the QA Policy Manual (including green-line diagrams).

FUNCTIONAL/QUALITY RECLASSIFICATION PROCESS FLOWCHART

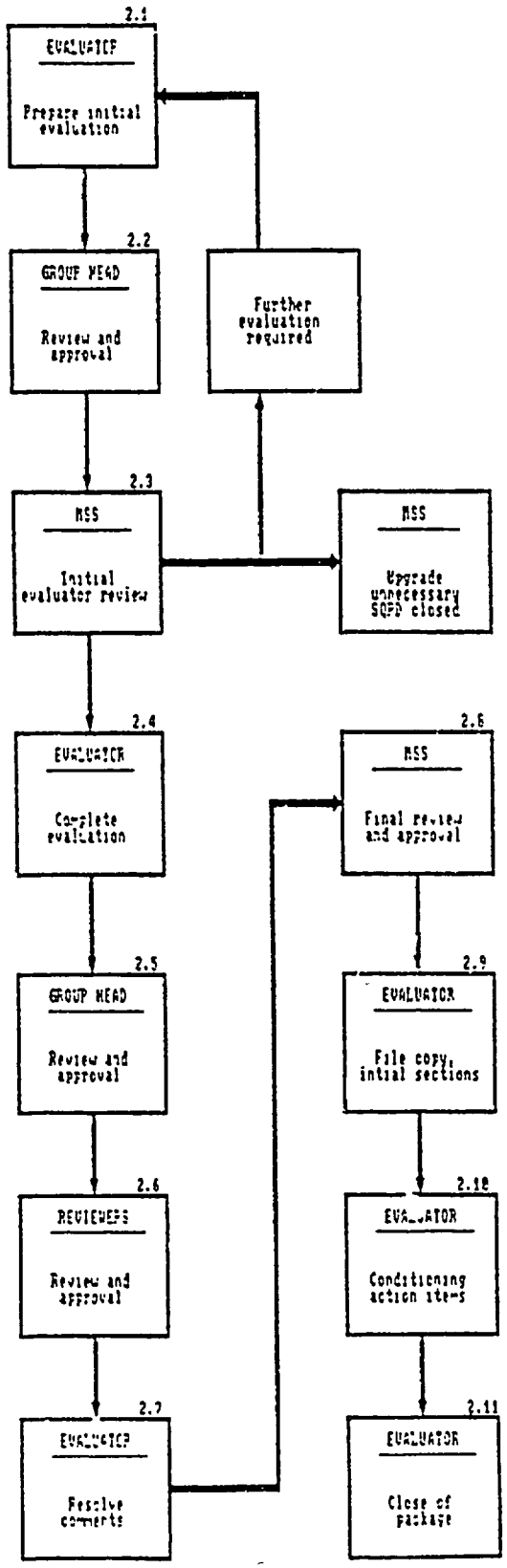

Revision 0