NMC
Committed to Nuclear Excellence

Kewaunee Nuclear Power Plant
Operated by Nuclear Management Company, LLC

NRC-03-028 10 CFR 50.90

March 14, 2003

U.S. Nuclear Regulatory Commission
ATTN: Document Control Desk
Washington, DC 20555

KEWAUNEE NUCLEAR POWER PLANT
DOCKET 50-305
LICENSE No. DPR-43
RESPONSES TO REQUEST FOR ADDITIONAL INFORMATION REGARDING LICENSE AMENDMENT REQUEST 193, MEASUREMENT UNCERTAINTY RECAPTURE POWER UPRATE FOR KEWAUNEE NUCLEAR POWER PLANT

References: 1) Letter NRC-03-004 from Thomas Coutu to Document Control Desk, "License Amendment Request 193, Measurement Uncertainty Recapture power Uprate for Kewaunee Nuclear Power Plant," dated January 13, 2003 (TAC No. MB7225).

In accordance with the requirements of 10 CFR 50.90, Nuclear Management Company, LLC (NMC) submitted license amendment request (LAR) 193 (reference 1) for a measurement uncertainty recapture (MUR) power uprate of 1.4 percent. The MUR power uprate would change the operating license and the associated plant Technical Specifications (TS) for the Kewaunee Nuclear Power Plant (KNPP) to reflect an increase in the rated power from 1650 MWt to 1673 MWt.

On March 7, 2003, the NRC issued a formal request for additional information (RAI) pertaining to the gird stability study performed for the 1.4 percent power uprate at KNPP. The RAI requested the NMC provide the details for the grid stability analysis including assumptions, results, and conclusions for the MUR power uprate condition.

Attachment 1 to this letter contains the grid stability study performed by American Transmission Company, LLC (ATC) to aid in the review of the MUR power uprate license amendment. This study, "Interim Interconnection Evaluation Study Report," evaluated a 38 megawatt electric (MWe) uprate implemented in two phases: a 10 MWe addition in 2003 and the remaining 28 MWe addition in 2004. It should be noted that this study is considered an interim report. As explained in the attached report, the KNPP study was performed out of queue, meaning that other generation interconnection requests with an earlier queue position may affect the KNPP study results. If any of these other generation interconnection requests are not implemented as planned, the KNPP study results may change and will be subject to restudy.

N490 Highway 42 • Kewaunee, Wisconsin 54216-9510
Telephone 920.388 2560

A001

This interim study determined that one transmission system upgrade will be required to address stability issues by June of 2005. The fact that the study may require restudy and that the required system upgrade may be required has been captured in the KNPP site corrective action process. Note that no grid stability issues exist for the full 38 MWe uprate prior to June 2005, and then only if certain planned generation facility upgrades are completed as planned. There were no grid stability issues or facility upgrades based on the MUR power uprate (10 MWe addition in 2003).

Based on the changes to the transmission service requests (TSR) referenced on page 9 of this evaluation, an erratum was issued to the interconnection study on March 13, 2003. Page 9 has been replaced in Attachment 1 with the revised page 9 dated March 13, 2003. The cover page describing the erratum is located in Attachment 2.

This response to the request for additional information does not change the Operating License or Technical Specifications for the KNPP. This response also does not change the no significant hazards determination originally submitted in reference 1. One new commitment is being made as a part of this response: KNPP will review the interim interconnection evaluation study, or the final interconnection evaluation study if it is available, in 2004 to determine whether the transmission system upgrade continues to be required before June 2005.

In accordance with 10 CFR 50.91, a copy of this application, with attachments, is being provided to the designated Wisconsin Official.

I declare under penalty of perjury that the foregoing is true and correct.
Executed on March 14, 2003.

K Ahlage for

Thomas Coutu
Site Vice-President, Kewaunee Plant

LMG

Attachments

1. Interim Interconnection Evaluation Study Report for the Kewaunee Nuclear Power Plant, Revision 0, December 12, 2002, with Erratum for Page 9 dated March 13, 2003

2. Cover Page for Erratum to the Interim Interconnection Evaluation Study Report for the Kewaunee Nuclear Power Plant dated March 13, 2003

cc- US NRC, Region III
US NRC Senior Resident Inspector
Electric Division, PSCW
K. Burrus, ATC LLC

ATTACHMENT 1

NUCLEAR MANAGEMENT COMPANY, LLC
KEWAUNEE NUCLEAR PLANT
DOCKET 50-305

March 14, 2003

Letter from Thomas Coutu (NMC)

To

Document Control Desk (NRC)

Response to Request for Additional Information

Interim Interconnection Evaluation Study Report for the Kewaunee Nuclear Power Plant, Revision 0, December 12, 2002, with Erratum for Page 9 dated March 13, 2003

AMERICAN TRANSMISSION COMPANY

THE ENERGY ACCESS COMPANY

Interim

Interconnection Evaluation Study Report

Generator Interconnection Request G165 (#37239-01)

35 MW Increase at the Nuclear Generation Facility

in Kewaunee County, Wisconsin

Revision 0

December 12, 2002

American Transmission Company, LLC

This page intentionally left blank.

Executive Summary

This report contains of the preliminary Interconnection Evaluation Study (IES) for Generation Interconnection Request (GIR) #G165 [Queue #37239-01]. The purpose of this study is to evaluate the impact of a 38 MW increase of a nuclear generation unit, which is connected to an existing 345 kV substation that is owned by the American Transmission Company (ATC). The nuclear generation facility is located in Kewaunee County, Wisconsin. The increased generation will normally be in a base load mode of operation. The MW increase will be added in two stages. The requested in-service date for the first 10 MW of increase is May 2003. The requested in-service date for the remaining 28 MW of increase is January 2004.

The G165 request is actually for a 35 MW increase. However, a 38 MW increase was studied based on the generator technical information provided by the customer. The 38 MW value was studied to provide a worst-case analysis representing the total possible output at the Kewaunee power plant after the increase.

The purpose of this study is primarily to determine whether the transmission system may have unacceptable stability due to the addition of G165. As noted below, a power flow analysis is not needed because it covered by the initial Transmission Service Request (TSR #75000494). A short circuit analysis is not needed because no generating unit short circuit capabilities are to be changed and no required transmission system upgrades were identified that would affect the system short circuit levels.

The Generator elected to have this study performed out of queue order, which is prior to other GIRs with an earlier queue position that may affect the G165 study results being studied and placed in service. ATC determined in its sole judgment that seven Generator Interconnection Requests with an earlier queue position may impact the G165 study results. These requests are G044, G048, G049, G063, G103, G111, and G131. It should be noted that the final study results for G103 and G131 are not yet available. This study included these proposed GIR facilities and any presently identified required system upgrades associated with them to the fullest extent possible. If any of these requests are not actualized as planned, the G165 study results may change and this Request may be subject to restudy at the Generator's expense. Subsequently, the Generator's obligations that are identified in this report may change depending on the results of any restudy.

The results of this study may be subject to change. The results are based on data provided by the Generator and other ATC system information that was available at the time the study was performed. If there are any significant changes in the Generator data, in earlier queue GIRs, in related Transmission Service Requests (TSRs), or subsequent ATC transmission system development plans, then the results of this study may also change significantly. Therefore, this request may be subject to restudy. The Generator should report any significant generation facility data changes immediately.

Interconnection Facilities For G165

Since the G165 request is simply for an increase the maximum power output of an existing generating facility, no new interconnection facilities will be needed.

System Upgrades Required Before the Addition of G165

Based on the scope of the analysis covered by this report, there are no system upgrades required on January 2004, before the addition of G165. However, there is an existing Kewaunee plant operating restriction procedure that limits the net generation output level that will remain in effect. The operating procedure applies whenever either of the Kewaunee-Point Beach 345 kV line or Kewaunee-North Appleton 345 kV line is taken out of service. The restriction is required for both thermal loadability and stability purposes.

These "Before" conclusions and the following "After" conclusions assume that all the System Upgrades presently associated with G111 are installed by June 2003 and the preliminary IES findings for G103 are installed by December 2003. If any planned system changes associated with G111 and G103 are delayed, withdrawn, or changed, then any subsequent changes in the G165 conclusions will be investigated and provided in a subsequent IES report.

System Upgrades Required After the Addition of G165

The system impacts of G165 on system stability limit violations were examined at five stages of GIR implementation. Five stages are examined because the G165 increases to be introduced in two steps and because the impacts may be affected by seven different GIRs with an earlier queue position and some GIRs have different in-service dates. These requests are G044, G048, G049, G063, G103, G111, and G131. It should be noted that the final study results for G103 and G131 are not yet available. The five GIR implementation stages associated with G165 are: January 2004, June 2004, January 2005, June 2005, and June 2007.

Five GIRs have earlier queue positions, but later requested in-service dates than G165. G165 is responsible for any Required System Upgrades that are needed when GIRs with earlier queue positions are placed in service. These Required System Upgrades are needed due to the added presence of G165 and would be unnecessary without G165.

January 2004 – With the Addition of G165, the Initial "After" State

Based on the scope of the analysis covered by this report, there are no system upgrades required in January 2004 after the addition of G165. The existing Kewaunee plant operating restriction that limits the net generation output level, noted above, will remain in effect.

June 2004 – With the Addition of G063 (GIC015)

The impacts for the expected system on January 2005 with the addition of G063 will be provided in a subsequent IES report.

January 2005 – With the Addition of G048 (GIC010)

The impacts for the expected system on January 2005 with the addition of G048 will be provided in a subsequent IES report.

June 2005 – With the Addition of G044 (GIC007) and G049 (GIC011)

No system problems were found without the addition of G103. Four stability problems were found with the addition of G103, but without G165 installed. Required System Upgrades addressing these problems will be identified in the G103 Facility Study. With G165 installed, seven additional stability problems were found. The Required System Upgrades identified in the G103 Facility Study may eliminate some of these problems.

One Required System Upgrade is needed to address the three stability problems associated with the addition of G165 by June 2005 with the addition of G044 and G049. This upgrade is listed in Table I.1 and shown in Figure I.2 below. It involves adding a second (series) 345 kV circuit breaker on the North Appleton-G049 (L6831b) 345 kV line at the North Appleton substation.

The estimated total cost of this Required System Upgrade is $500K. The financing of this cost is the responsibility of G165 since these upgrades are due to the proposed generation addition.

Table I.1: Required Upgrades Due To G165 by June 2005

Substation	Circuit	Item	Specifications	Cost Estimate
North Appleton	L6831b	Add a second 345 kV line circuit breaker	2-cycle, 40 kA	$500K
			Total	**$500K**

The existing Kewaunee plant operating restriction that limits the net generation output level, noted above, would remain in effect.

June 2007 – With the Addition of G131 (GIC041)

The impacts for the expected system on June 2007 with the addition of G131 cannot be investigated until the IES for G131 has been completed.

Further Study

Based on the results of this interim IES report, there are no Connection Facilities or Required System Upgrades in January 2004. Therefore, no Facility Study is needed for the January 2004 impacts.

After the IES is finalized, the next step in the Generation Interconnection Request process is for the Generator to decide whether to proceed with the Facility Study. The Facility Study will investigate whether the selected Required and Optional System Upgrades address all of the identified System Impact Study issues. The Facility Study will also include a budgetary cost

estimate and schedule for any ATC system modifications required to resolve the identified impact problems.

If the Generator elects to proceed with the Facility Study, then the proposed System Upgrades that are to be included in the Facility Study should be identified. The study results presented in the final IES report are intended to provide sufficient information to allow the Generator to make these decisions.

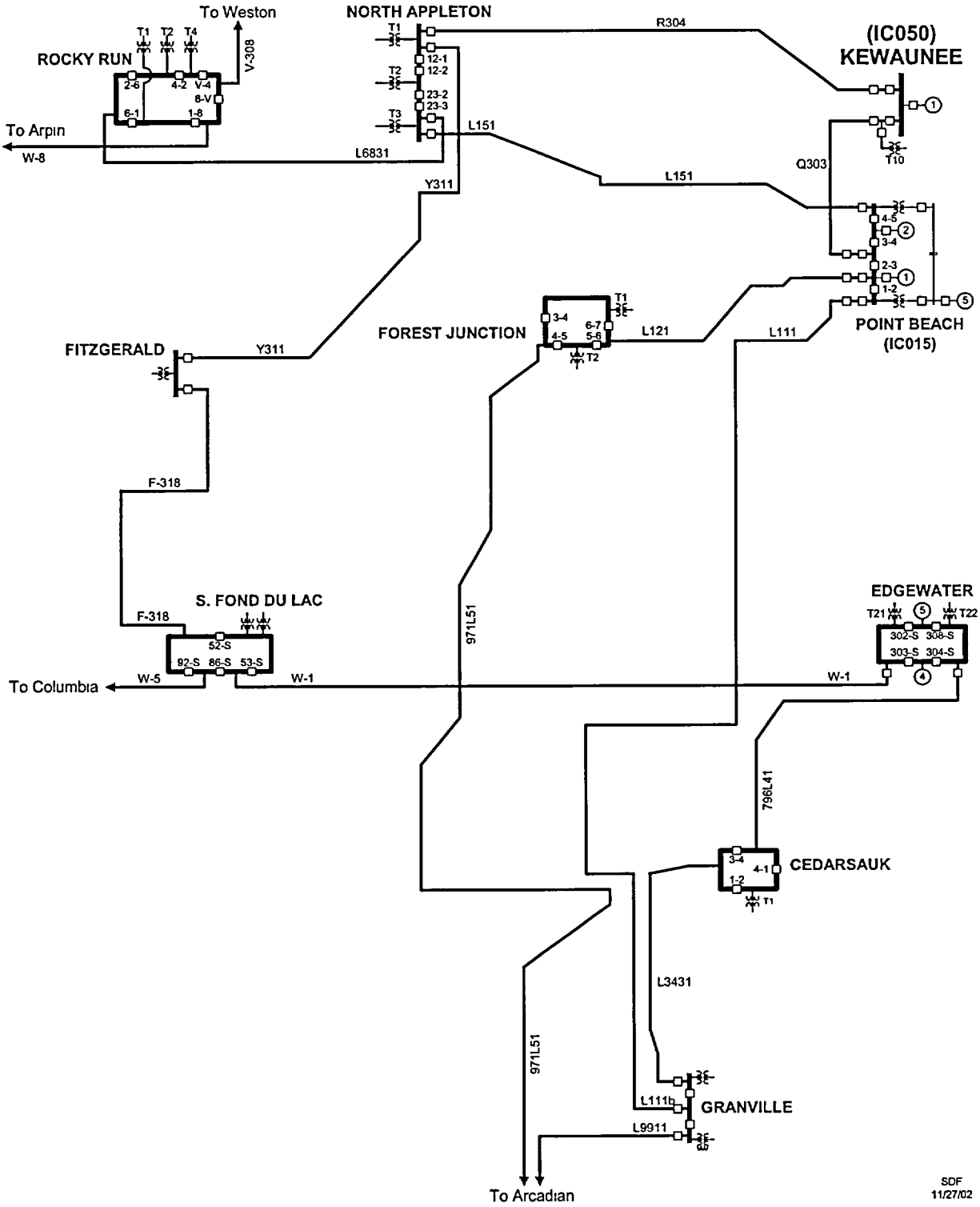

Figure 1: One Diagram of Expected System on January 2004

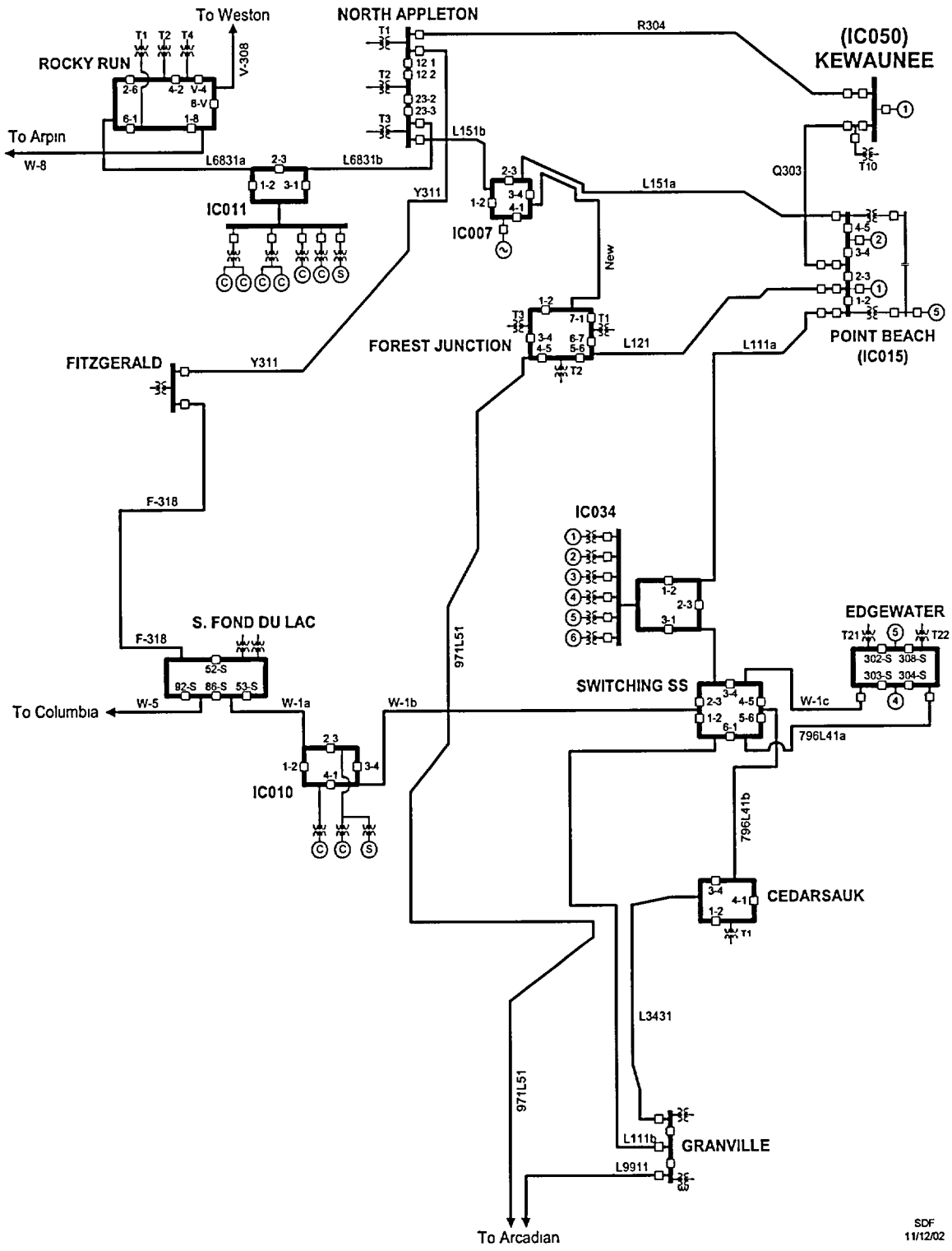

Figure 2: One Diagram of Expected System on June 2005

1. Introduction

This report contains the preliminary Interconnection Evaluation Study (IES) for Generation Interconnection Request (GIR) #G165 [Queue #37239-01]. The purpose of this study is to evaluate the impact of a 38 MW increase of a nuclear generation unit, which is connected to an existing 345 kV substation that is owned by the American Transmission Company (ATC). The nuclear generation facility is located in Kewaunee County, Wisconsin. The 38 MW increase will be added in two stages. The requested in-service date for the first 10 MW of increase is May 2003. The requested in-service date for the remaining 28 MW of increase is January 2004.

Public information related to G165 can be found via the Interconnections link on the MISO web site at **http://oasis.midwestiso.org/documents/ATC/queue.html**

This preliminary report covers the power flow analysis and stability analysis of the IES. A short circuit analysis is not needed because the units short circuit capacity will remain unchanged and no transmission system modifications are required that would affect the system short circuit levels.

The power flow analysis for G165 is contained in four Transmission Service Requests (TSR #75005216, TSR #75018478, TSR #75230045, and TSR #75230989). The resolution of possible power flow problems is not required for interconnection service, since thermal loadability impacts may be significantly affected by the specific power delivery requests from a facility. Whether any specific power delivery can be accomplished without causing power flow problems or requiring specific system modifications can only be confirmed via a valid Transmission Service Request (TSR) submitted on the MISO OASIS. Since the power flow analysis of the four TSRs associated with G165 are presented in separate reports, which may be subject to change, no power flow analysis results are presented in this IES report.

A short circuit analysis is not needed because no generating unit short circuit capabilities are to be changed and no required transmission system upgrades were identified that would affect the system short circuit levels.

The purpose of the study is to identify any problems that might exist prior to the addition of G165 and any problems might be introduced after the addition of G165. If problems are found, then possible solutions for the problems will be identified. Any "Before" problems are to be resolved by ATC or LDC prior to G165 being placed in service. Any "After" problems are to be attributed to the addition of G165.

The Generator elected to have this study performed out of queue order, which is prior to other GIRs with an earlier queue position that may affect the G165 study results having completed studies or being placed in service. ATC determined in its sole judgment that seven Generator Interconnection Requests with an earlier queue position may impact the G165 study results. These requests are G044, G048, G049, G063, G103, G111, and G131. It should be noted that the final study results for G103 and G131 are not yet available. This study included these proposed GIR facilities and any presently identified required system upgrades associated with

them to the fullest extent possible. If any of these requests are not actualized as planned, the G165 study results may change and this Request may be subject to restudy at the Generator's expense. Subsequently, the Generator's obligations that are identified in this report may change depending on the results of any restudy.

The results of this study may be subject to change. The results are based on data provided by the Generator and other ATC system information that was available at the time the study was performed. If there are any significant changes in the Generator data, in earlier queue GIRs, in related Transmission Service Requests (TSRs), or subsequent ATC transmission system development plans, then the results of this study may also change significantly. Therefore, this request may be subject to restudy. The Generator is responsible for communicating any facility data changes in a timely fashion to ATC prior to commercial operation.

2. Project Description

Generator Interconnection Request (GIR) G165 is a request to increase the output capability of the existing Kewaunee Nuclear Power Plant by 35 MW. However, a 38 MW increase was studied is based on the generator technical information provided by the customer. The 38 MW value was studied to provide a worst-case analysis representing the total possible output at the Kewaunee power plant after the increase.

The 38 MW increase is divided into two stages or steps. The first step is to increase the output be 10 MW in May 2003. The second step is to increase the output by another 28 MW in January 2004. The generation will normally be in a base load mode of operation. The Kewaunee Plant is located in Kewaunee County, Wisconsin. A one-line diagram of the power system in the vicinity of Kewaunee is shown in Figure 1.

Interconnection Facilities For G165
Since the G165 request is simply for an increase in the maximum power output of an existing generating facility, no new interconnection facilities will be needed.

3. Criteria, Methodology, and Assumptions

3.1 Study Criteria

3.1.1 Contingency Criteria

All of the MISO adopted NERC Reliability Criteria and the ATC contingency criteria are to be met for both the power flow (thermal loadability and voltage level) analysis, as well as the stability analysis.

For the power flow analysis, the contingencies included the normal (intact) system configuration, all of the standard N-1 contingencies and a set of about N-2 contingencies that ATC has determined to be significant.

For the stability analysis, a set of contingencies are selected to address the MISO and ATC concerns with particular attention to the following three contingency conditions:

1) Fault cleared in primary time with an otherwise intact system.
2) Fault cleared in delayed clearing time (i.e. breaker failure conditions) with an otherwise intact system.
3) Fault cleared in primary clearing time with a pre-existing outage of any other transmission element.

3.1.2 Affected Element Criteria

A load-carrying system element is considered to be affected by G165, if at least 3% of the G165 generation flows in the element with the G165 generator exporting the maximum amount of power. A system bus is considered to be significantly affected by G165, if its voltage magnitude is changed by at least 1% for the situations of the G165 generator exporting no power versus exporting the maximum amount of power.

3.1.3 Thermal Loadability Criteria

For normal (intact) system conditions, the loading of all transmission system elements significantly affected by G165 must not exceed 100% of the summer normal loadability rating (Rate A). For contingency system conditions (selected N-1 and N-2 contingencies), the loading of all transmission system elements significantly affected by G165 must not exceed 100% of the summer emergency loadability rating (Rate B). The loadability values are measured to the nearest 1/2 (0.5) percent.

Equipment thermal loadability limit violations do not need to be addressed to enter into an interconnection agreement. Nevertheless, the thermal loadability limit violations are a reasonable indication of what facilities might need upgrading when power delivery service is requested. Delivery service can only be reserved through a confirmed, valid Transmission Service Request submitted on the MISO OASIS. It is important to note that generic assumptions are made in this analysis regarding the delivery of power from the proposed plant and may not accurately reflect the specific delivery service that is requested for the initial in-service date.

3.1.4 Voltage Level Criteria

For normal (intact) system conditions, the voltage level of all buses significantly affected by G165 must be in the range of 95% to 105% of the nominal system voltage. For contingency system conditions (selected N-1 and N-2 contingencies), the voltage level of all buses significantly affected by G165 must be in the range of 90% to 105% of the nominal system voltage and not change by more than $\pm$5%. The voltage level values are measured to the nearest 1/2 (0.5) percent.

3.1.5 Stability Criteria

Transient stability simulations were performed to determine if the critical clearing times (CCT) for all pertinent criteria contingencies were less than the maximum expected breaker failure clearing times in this area. Any critical clearing times that were less than the maximum expected breaker failure clearing times would, therefore, be considered unacceptable. The CCT is the clearing time for which any generation unit becomes unstable (e.g. continually slips poles). The clearing time values are measured to the nearest 1/4 (0.25) cycle.

3.2 Study Methodology

This report covers the power flow analysis and stability analysis of the IES. A short circuit analysis is not needed because the units short circuit capacity will remain unchanged and no transmission system modifications are required that would affect the system short circuit levels.

3.2.1 Before and After Comparison

To identify what impacts should be attributed to the G165, two system conditions are examined, "Before" and "After" the addition of the proposed generation. The "Before" base case is to identify the expected system without the addition of G165. The "After" base case is to represent the expected system with G165 in service. Any "Before" problems are to be resolved by ATC or LDC prior to G165 being placed in service. Any "After" problems are to be attributed to the addition of G165.

The system impacts of G165 on system thermal loadability, voltage level, and stability limit violations were examined at five stages of GIR implementation. Five stages are examined because the G165 increases to be introduced in two steps and because the impacts may be affected by seven different GIRs with an earlier queue position and some GIRs have different in-service dates. The five GIR implementation stages associated with G165 are: January 2004, June 2004, January 2005, June 2005, and June 2007.

3.2.2 Base Case Development

A. General

The Summer 2004 Peak base case from the Multi-Regional Modeling Working Group (MMWG) 1999 series was used as the starting point for the development of the various power flow analysis and stability analysis base cases. The 1999 series was used because the 2000 series posed a number of stability simulation problems.

The power flow analysis was performed using the Summer 2004 (100%) peak load base case because this should yield the most conservative results.

The stability analysis was performed using a base case, which was modified to represent a light load (50% of peak load) condition. Simulations were performed at the light-load (50%) system load level. The stability performance in this area during light-load conditions is worse than at higher load levels. This is expected due to the different system conditions the generators see at light load, specifically the longer electrical path from source to load. Therefore, the light-load studies were performed to identify the more conservative stability performance in this area, and to identify required upgrades that will protect the transmission system and generation in this area for year round conditions.

The 2004 MMWG stability base case contains dynamic model information for generators throughout MAIN, as well as a significant portion of the continental United States. The original case and model database were *not* modified to include other proposed generation interconnection requests, other than the ones identified below which could affect the results of this study.

B. Generation Interconnection Requests with Earlier Queue Position

Proposed GIRs with earlier queue positions than G165 that may affect G165 study results were included in the appropriate study base case. Seven (7) earlier GIRs were to be included in this analysis because they were judged by ATC to have the potential to significantly affect the G165 SIS results.

These GIRs are:

- G044 (#36705-01) [GIC007] 600 MW, 345 kV, in Outagamie County, June 2005
- G048 (#36749-01) [GIC010] 725 MW, 138 kV, in Fond du Lac County, January 2005
- G049 (#36756-01) [GIC011] 950 MW, 345 kV, in Portage County, June 2005
- G063 (#36825-01) [GIC015] 90 MW, 345 kV, in Manitowoc County, May 2003/May 2004
- G103 (#37062-01) [GIC034] 530 MW, 345 kV, in Sheboygan County, December 2003
- G111 (#37106-01) [GIC035] 85 MW, 138 kV, in Brown County, June 2003.
- G131 (#37145-01) [GIC041] 500 MW, 138 kV in Brown County, June 2007

The G103 and G131 requests were not included in a base case for the analysis performed for this report because their Interconnection Evaluation Studies have not been completed.

C. Generation Dispatch

The Kewaunee Nuclear Plant generator unit power was exported in the following manner - 59% was delivered to Wisconsin Public Service network load and 41% was delivered to Alliant Energy network load. The output of any generating units associated with the GIR with an earlier queue position that did not have an approved TRS dispatch was exported in the following manner - 75% south to Commonwealth Edison load and 25% west to Northern States Power load.

The dispatch of the remaining generator units in the base case remained the same as the MMWG base case for power flow analysis (100% of peak load) bases cases. For stability analysis (50% of peak load condition), the dispatch of generating units in and around ATC were reduced to the

50% levels, except the generating units in the vicinity of G165, which were dispatched at the 100% levels. This approach assures conservative stability performance results.

D. Voltage Regulation

The scheduled voltage levels at all buses in the MAIN base case were unchanged, except at the Kewaunee 345 kV bus. For the power flow analysis (100% of peak load condition), the scheduled voltage was selected to cause the generator to operate at .98 lagging power factor for the normal (intact) system configuration. For the stability analysis (50% of peak load condition), the scheduled voltage was selected to cause the generator to operate at 1.00 (unity) power factor. The unity power factor condition is a conservative state.

E. Interface Exchange Considerations

The power flow analysis and stability analysis were performed at one interface exchange pattern. This interface exchange is used by ATC to produce relatively conservative results.

3.2.3 Monitored Elements

All of the load carrying elements that are included in base case and assigned to the ATC control area were monitored for the thermal loadability analysis. In general, all radial Load-serving Distribution Company (LDC) elements are modeled in the base case. So, they are monitored. Radial LDC elements are not modeled and, therefore, not monitored.

No ATC or LDC system buses were judged by ATC to be significantly affected by G165. So, they were not monitored.

3.2.4 Software Analysis Tools

The system power flow analysis was performed using the Power Technologies, Inc. (PTI) Power System Simulator for Engineering (PSS/E) power flow software package (Version 26.2.3) and the PTI Managing and Utilizing System Transmission (MUST) software package (Version 4.0). These programs are accepted industry-wide for power flow analysis. MUST efficiently calculates the impact of transactions on key network elements, identifies the most limiting contingencies and constraints, calculates the First Contingency Incremental Transfer Capability (FCITC) and calculates FCITC sensitivity to transactions and generation dispatch changes.

All stability studies were performed using the Dynamics Simulation and Power Flow modules of the Power System Simulation/Engineering-26 (PSS/E, Version 26) program from Power Technologies, Inc (PTI). This program is accepted industry-wide for dynamic stability analysis.

3.2.5 Critical Clearing Times

Faults were applied and cleared after various time durations for each of the selected contingencies to determine the critical clearing time (CCT). For example, a CCT of 10 cycles means that one or more generating units became unstable at 10.5 cycles, while all units remained

stable at 10 cycles. CCT is the longest time that fault conditions can be applied at the described location before being removed by protective equipment for which the units on the system will remain stable.

3.3 Assumptions

3.3.1 Generation Facility Model Data

The latest power flow and dynamic model information for the G165 generator, exciter, and governor, as provided by the Generator, was used in the study. The information was incorporated into the dynamic study database. Response tests of the exciter and governor were completed, and steady-state and step response tests of the entire system were performed to ensure an acceptable dynamics model. It is noted here that the governor submitted by the Generator does not meet ATC's normal criteria for this type of equipment. It was agreed by the Generator that proxy data from another generator with similar characteristics could be used until the specifics of the governor could be worked out between the manufacturer, the customer and ATC.

This study did not included modeling of any auxiliary load associated with G165. The impact this auxiliary load would have on the post-G165 stability results would be minimal. In addition, load modeled near the generator could only improve the G165 stability response, so the results in this report represent a worst-case scenario.

4. Analysis Results

The system impacts of G165 on system thermal loadability, voltage level, and stability limit violations was examined at five stages of GIR implementation because G165 impacts may be affected by seven GIRs with earlier queue position and some GIRs have different in-service dates. The five GIR implementation stages associated with G165 are: January 2004, June 2004, January 2005, June 2005, and June 2007.

It should be noted that the final study results for G103 and G131 are not yet available. This study included these proposed GIR facilities and any presently identified required system upgrades associated with them to the fullest extent possible.

Although the power flow analysis for this study includes these generator interconnection requests, it does not incorporate requests for delivery service already in the TSR queue that are currently in the "study" mode. Therefore, this analysis may not identify the same transmission facilities problems that would be found by a TSR evaluation for G165.

It should be noted that this GIR study, which uses assumed energy transfers, does not determine required power flow related system upgrades. Required power flow related system upgrades are determined by the TSR studies, which will model actual contracted energy transfers, once they are known. The TSR study results may differ significantly from the GIR power flow analysis results.

Note that all stability tables in Appendices A and B that show critical clearing times in red and bold text represent scenarios where the actual maximum expected clearing times are inadequate.

4.1 January 2004 – Without the Addition of G165, the "Before" State

Based on the scope of the analysis covered by this report, there are no system upgrades required on January 2004, before the addition of G165. However, there is an existing Kewaunee plant operating procedure that limits the net generation output level that will remain in effect. The operating procedure applies whenever either of the Kewaunee-Point Beach 345 kV line or Kewaunee-North Appleton 345 kV line is taken out of service (planned or unplanned). The restriction is required for both thermal loadability and stability purposes.

These "Before" conclusions and the following "After" conclusions assume that all the System Upgrades presently associated with G111 are installed by June 2003 and with the preliminary IES findings for G103 are installed by December 2003. If any planned system changes associated with G111 and G103 are delayed, withdrawn, or changed, then any subsequent changes in the G165 conclusions will be investigated and provided in a subsequent IES report.

4.2 January 2004 – With the Addition of G165, the Initial "After" State

Based on the scope of the analysis covered by this report, there are no system upgrades required on January 2004 after the addition of G165. The existing Kewaunee plant operating restriction that limits the net generation output level, noted above, will remain in effect.

The effects of G103 on the G165 impacts are not included in this report because the IES for G103 has not been completed. The impacts for the expected system with the addition of G103 will be provided in a subsequent IES report when it becomes available.

Five GIRs have an earlier queue position, but later requested in-service date than G165. So, G165 may be responsible for specific Required System Upgrades when GIRs with an earlier queue position are placed in service. Any required system upgrades attributed to G165 would be only the modifications needed due to added presence of G165, not any effects of the earlier queue GIR without G165.

4.3 June 2004 – With the Addition of G063 (GIC015)

The impacts for the expected system on January 2005 with the addition of G063 will be provided in a subsequent IES report.

4.4 January 2005 – With the Addition of G048 (GIC010)

The impacts for the expected system on January 2005 with the addition of G048 will be provided in a subsequent IES report.

4.5 June 2005 – With the Addition of G044 (GIC007) and G049 (GIC011)

Stability analyses were performed on the expected system in June 2005 to identify the stability performance and any required protection upgrades due to the addition of G165 (maximum net output = 38 MW). Figure 2 shows the one-line diagram of the area transmission system in June 2005 with the addition of G044 and G049. Note that this diagram includes the bus reconfiguration that is required for stability issues prior to G165.

No system problems were found without the addition of G103.

One Required System Upgrade is needed to address the three stability problems associated with the addition of G165 by June 2005 with the addition of G044 and G049. This upgrade is listed in Table I.1 and shown in Figure I.2 below. It involves adding a second (series) 345 kV circuit breaker on the North Appleton-G049 (L6831b) 345 kV line at the North Appleton substation.

Stability Criteria #1 – Fault Cleared in Primary Clearing Time

Any system upgrades required for stability criteria #1 contingencies associated with G165 will be addressed by any upgrades associated with Stability Criteria #2.

Stability Criteria #2 – Intact System, Fault Cleared in Breaker failure Clearing Time

Four stability problems were found with the addition of G103, but without G165 installed. Required System Upgrades addressing these problems will be identified in the G103 Facility Study. With G165 installed, seven additional stability problems were found. The Required System Upgrades identified in the G103 Facility Study may eliminate some of these problems. Table B2 in Appendix B presents the results for the transmission system after the addition of 38 MW of G165 generation with the criteria #2 contingencies examined. Note that all maximum expected clearing times (MECT) have been modified to reflect the required protection modifications (e.g. bus reconfiguration, resetting of breaker failure relays) for the expected system in June 2005 without G165.

Stability Criteria #3 – Pre-existing Outage, Fault Cleared in Primary Clearing Time

Table A1 in Appendix A presents the results for the existing transmission system with the criteria #3 contingencies studied without the addition of G165. The table shows that the existing primary clearing times are sufficient to meet the required clearing times for all scenarios. No upgrades are required for stability criteria #3 contingencies with G165.

Table B1 in Appendix B presents the results for the existing transmission system with the criteria #3 contingencies studied with the addition of G165. One Required System Upgrades will needed to address stability issues for the expected system by June 2005 with the addition of G044 and G049. This upgrade is listed in Table I.1 and shown in Figure I.2 below. It involves adding a second (series) 345 kV circuit breaker on the North Appleton-G049 (L6831b) 345 kV line at the North Appleton substation.

The estimated total cost of this Required System Upgrade is $500K. The financing of this cost is the responsibility of G165 since these upgrades are due to the proposed generation addition.

Table I.1: Required Upgrades Due To G165 by June 2005

Substation	Circuit	Item	Specifications	Cost Estimate
North Appleton	L6831b	Add a second 345 kV line circuit breaker	2-cycle, 40 kA	$500K
			Total	**$500K**

The existing Kewaunee plant operating restriction that limits the net generation output level, noted above, will remain in effect.

4.6 June 2007 – With the Addition of G131 (GIC041)

The impacts for the expected system on June 2007 with the addition of G131 can not be investigated until the IES for G131 has been completed.

5. Conclusions

Interconnection Facilities For G165

Since the G165 request is simply for an increase the maximum power output of an existing generating facility, no new interconnection facilities will be needed.

System Upgrades Required Before the Addition of G165

Based on the scope of the analysis covered by this report, there are no system upgrades required on January 2004, before the addition of G165. However, there is an existing Kewaunee plant operating restriction procedure that limits the net generation output level that will remain in effect. The operating procedure applies whenever either of the Kewaunee-Point Beach 345 kV line or Kewaunee-North Appleton 345 kV line is taken out of service. The restriction is required for both thermal loadability and stability purposes.

These "Before" conclusions and the following "After" conclusions assume that all the System Upgrades presently associated with G111 are installed by June 2003 and the preliminary IES findings for G103 are installed by December 2003. If any planned system changes associated with G111 and G103 are delayed, withdrawn, or changed, then any subsequent changes in the G165 conclusions will be investigated and provided in a subsequent IES report.

System Upgrades Required After the Addition of G165

The system impacts of G165 on system stability limit violations were examined at five stages of GIR implementation. Five stages are examined because the G165 increases to be introduced in two steps and because the impacts may be affected by seven different GIRs with an earlier queue position and some GIRs have different in-service dates. These requests are G044, G048, G049, G063, G103, G111, and G131. It should be noted that the final study results for G103 and G131 are not yet available. The five GIR implementation stages associated with G165 are: January 2004, June 2004, January 2005, June 2005, and June 2007.

Five GIRs have earlier queue positions, but later requested in-service dates than G165. G165 is responsible for any Required System Upgrades that are needed when GIRs with earlier queue positions are placed in service. These Required System Upgrades are needed due to the added presence of G165 and would be unnecessary without G165.

<u>January 2004 – With the Addition of G165, the Initial "After" State</u>

Based on the scope of the analysis covered by this report, there are no system upgrades required in January 2004 after the addition of G165. The existing Kewaunee plant operating restriction that limits the net generation output level, noted above, will remain in effect.

June 2004 – With the Addition of G063 (GIC015)

The impacts for the expected system on January 2005 with the addition of G063 will be provided in a subsequent IES report.

January 2005 – With the Addition of G048 (GIC010)

The impacts for the expected system on January 2005 with the addition of G048 will be provided in a subsequent IES report.

June 2005 – With the Addition of G044 (GIC007) and G049 (GIC011)

No system problems were found without the addition of G103. Four stability problems were found with the addition of G103, but without G165 installed. Required System Upgrades addressing these problems will be identified in the G103 Facility Study. With G165 installed, seven additional stability problems were found. The Required System Upgrades identified in the G103 Facility Study may eliminate some of these problems.

One Required System Upgrade is needed to address the three stability problems associated with the addition of G165 by June 2005 with the addition of G044 and G049. This upgrade is listed in Table I.1 and shown in Figure I.2 below. It involves adding a second (series) 345 kV circuit breaker on the North Appleton-G049 (L6831b) 345 kV line at the North Appleton substation.

The estimated total cost of this Required System Upgrade is $500K. The financing of this cost is the responsibility of G165 since these upgrades are due to the proposed generation addition.

Table I.1: Required Upgrades Due To G165 by June 2005

Substation	Circuit	Item	Specifications	Cost Estimate
North Appleton	L6831b	Add a second 345 kV line circuit breaker	2-cycle, 40 kA	$500K
			Total	**$500K**

The existing Kewaunee plant operating restriction that limits the net generation output level, noted above, would remain in effect.

June 2007 – With the Addition of G131 (GIC041)

The impacts for the expected system on June 2007 with the addition of G131 cannot be investigated until the IES for G131 has been completed.

Further Study

Based on the results of this interim IES report, there are no Connection Facilities or Required System Upgrades in January 2004. Therefore, no Facility Study is needed for the January 2004 impacts.

After the IES is finalized, the next step in the Generation Interconnection Request process is for the Generator to decide whether to proceed with the Facility Study. The Facility Study will investigate whether the selected Required and Optional System Upgrades address all of the identified System Impact Study issues. The Facility Study will also include a budgetary cost estimate and schedule for any ATC system modifications required to resolve the identified impact problems.

If the Generator elects to proceed with the Facility Study, then the proposed System Upgrades that are to be included in the Facility Study should be identified. The study results presented in the final IES report are intended to provide sufficient information to allow the Generator to make these decisions.

APPENDIX A

STABILITY RESULTS WITHOUT THE ADDITION OF G165

Table A1: June 2005 Critical Clearing Times, Light-Load (50%) Stability Base Case. Line Out Of Service, Primary Clearing Time. Before G165.

Item	Faulted Facilities [1,2]	Pre-existing Outage	Before G165	
			CCT [3]	Units Unstable [4]
1	IC034-POB	None	≥10 0	None
2		SS-CDR	≥10 0	None
3		SS-EDG #1	≥10 0	None
4		SS-IC010	≥10 0	None
5	IC034-SS	None	≥10 0	None
6		FOJ-ADN	≥10 0	None
7		POB-FOJ	≥10 0	None
8		POB-KEW	≥10 0	None
9		POB-IC007	≥10 0	None
10	KEW-NAP	POB-KEW	5 0	KEW
10a	"	"		
10b	"	"		
	KEW-NAP	IC007-NAP		
	IC007-NAP	KEW-NAP		
	POB-KEW	IC007-NAP		
	IC007-NAP	POB-KEW		
	POB-IC034	FOJ-ADN		
11	SS-GVL	SS-CDR	5 5	POB, KEW, IC007, IC010, EDG, WES, IC011, IC034

1 Table abbreviations· ADN – Arcadian, CDR – Cedarsauk, EDG – Edgewater, FOJ – Forest Junction, GVL – Granville, KEW – Kewaunee, NAP – North Appleton, POB – Point Beach, SS – Switching Station SS-EDG #1 is W-1C.

2 The fault is applied at the first named terminal of the faulted element. All faults modeled were 3-phase faults.

3 CCT = Critical Clearing Time (cycles). Red cell indicates actual equipment clearing times that are inadequate.

4 In the Units Unstable columns, all units unstable at a specific generating facility are designated with only the substation name and not with specific units (i e POB instead of POB G1-2).

5 10a – Kewaunee unit reduced from 568 MW net output to 540 MW net output 10b – Kewaunee unit reduced from 568 MW net output to 530 MW net output.

Table A2: June 2005 Critical Clearing Times, Light-Load (50%) Stability Base Case. Intact System, Breaker Failure Clearing Time. Before G165.

Item	Faulted Facilities [1,2]	Failed Circuit Breaker	Tripped Element(s) In Breaker Failure		Before G165	
				ACT	CCT [3]	Units Unstable [4]
1	POB-IC007	POB-IC007 @ POB	POB BS4-5	<9 0	9.5	POB
2	POB-KEW	POB-KEW @ POB	POB BS3-4, BS2-3	Double CB, ≤5 0	8 5	POB G2
3	POB-FOJ	POB-FOJ @ POB	POB-FOJ CB#2	Double CB ≤5 0	9 0	POB
4	POB-SS (IC034)	POB-SS @ POB	POB BS1-2	Double CB ≤5 0	8 5	POB, KEW
5	FOJ-IC007	BS1-2 @ FOJ	FOJ T3	~9 0	16 0	POB, KEW, IC007, IC010, EDG, WES, IC011, IC034
6	FOJ-POB	BS6-7 @ FOJ	FOJ T1	~9 0	13.5	POB, KEW, IC007, IC010, EDG, WES, IC011, IC034
7	FOJ-ADN	BS4-5 @ FOJ	FOJ T2	~9 0	12 0	POB, KEW, IC007, IC010, EDG, WES, IC011, IC034
8	IC007-POB	BS2-3 @ IC007	IC007-NAP	~9 0	9.5	IC007
9	IC007-POB	BS3-4 @ IC007	IC007-FOJ	~9 0	10 5	POB, KEW, IC007, IC010, EDG, WES, IC011, IC034
10	NAP-KEW	NAP-KEW @ NAP	NAP-FTZ, NAP T1, BS12-1	9 85	10 5	POB, KEW, IC007
11	NAP-FTZ	NAP-FTZ @ NAP	NAP-KEW, NAP T1, BS12-1	<11.0	10 5	POB, KEW, IC007
12	NAP-IC007	NAP-IC007 @ NAP	NAP-IC011, NAP T3, BS23-3	≤9 6	11 5	POB, KEW, IC007, IC010, EDG, IC034
13	NAP-IC011	NAP-IC007 @ NAP	NAP-IC007, NAP T3, BS23-3	8 6	9 0	POB, KEW, IC007, IC010, EDG, IC034
14	KEW-NAP	KEW-NAP @ KEW	KEW-NAP CB#2	Double CB ≤5 0	10 0	POB, KEW
15	KEW-POB	KEW-POB @ KEW	KEW-POB CB#2, T10	Double CB ≤5 0	10 5	KEW
16	RRN T1 (345)	BS6-1 @ RRN	RRN-IC011	9 25	11.5	POB, KEW, IC007, IC010, EDG, IC011, IC034
17	RRN-ARP	BS1-8 @ RRN	RRN T1	11 25	13.5	POB, KEW, IC007, IC010, EDG, WES, IC011, IC034
18	RRN-ARP	BS8-V @ RRN	RRN-WES	11 25	13 5	WES
19	RRN-WES	BSV-4 @ RRN	RRN T4	11 25	14 0	IC011 ST
20	RRN-WES	BS8-V @ RRN	RRN-ARP	11 25	15 0	IC011 ST
21	SS-POB (IC034)	BS3-4 @ SS	SS-EDG #1	~9 0	9 0	POB, KEW, IC007, IC010, WES, IC011, IC034
22	SS-POB (IC034)	BS2-3 @ SS	SS-IC010 (W-1B)	~9.0	[illegible]	POB, KEW, IC007, IC010, WES, IC011, IC034
22a	SS-IC034 @ IC034	BS2-3 @ SS	SS-IC010 (W-1B)	~9 0	10 5	POB, KEW, IC007, IC010, WES, IC011, IC034
23	SS-IC010	BS1-2 @ SS	SS-GVL	~9 0	9.0	POB, KEW, IC007, IC010, EDG, WES, IC011, IC034
24	SS-CDR	BS4-5 @ SS	SS-EDG #1	~9 0	[illegible]	POB, KEW, IC007, IC010, EDG, WES, IC011, IC034
25	SS-EDG #1	BS3-4 @ SS	SS-POB (IC034)	~9 0	[illegible]	POB, KEW, IC007, IC034
25a	SS-EDG #1 @ 90%	BS3-4 @ SS	SS-POB (IC034)	~9.0	11 0	POB, KEW, IC007, IC034
25b	SS-EDG #1 @ EDG	BS3-4 @ SS	SS-POB (IC034)	~9 0	11 5	POB, KEW, IC007, IC034
26	SS-EDG #2	BS6-1 @ SS	SS-GVL	~9 0	9 0	POB, KEW, IC007, IC010, EDG, WES, IC011, IC034
27	SS-EDG #2	BS5-6 @ SS	SS-CDR	~9 0	[illegible]	POB, KEW, IC007, IC010, EDG, WES, IC011, IC034
28	EDG-SS #1	EDG-SS @ EDG	EDG T21	≤10 5	10 5	POB, KEW, IC007, IC010, EDG, WES, IC011, IC034
29	EDG-SS #2	EDG-SS @ EDG	EDG T22	≤10 5	10 5	POB, KEW, IC007, IC010, EDG, WES, IC011, IC034
30	SFL-COL	BS86-S @ SFL	SFL-IC010	≤9 5	11.0	IC010
31	SFL-FTZ	BS92-S @ SFL	SFL-COL	≤10.5	12 0	IC010 ST
32	SFL 345-138 #1/#2	BS53-S @ SFL	SFL-IC010	≤10 0	11 0	IC010 ST
33	IC010-SFL	BS1-2 @ IC010	IC010 CT	~9 0	10 5	IC010 ST
34	IC010-SFL	BS2-3 @ IC010	IC010 CT & ST	~9.0	14 0	IC010 CT
35	CDR-GVL	BS3-4 @ CDR	CDR-SS		≥18 0	none
36	IC034-POB	BS2-3 @ IC034	IC034-SS, IC034 isolated		13.5	EDG G4
37	IC034-POB	BS1-2 @ IC034	IC034 generation		13 5	EDG G4
38	IC034-SS	BS2-3 @ IC034	IC034-POB, IC034 isolated		≥18 0	none
39	IC034-SS	BS1-2 @ IC034	IC034 generation		≥18 0	none

1 Table abbreviations· ADN – Arcadian, ARP – Arpin, COL – Columbia, CDR – Cedarsauk, EDG – Edgewater, FOJ – Forest Junction, FTZ – Fitzgerald, GVL – Granville, KEW – Kewaunee, NAP – North Appleton, POB – Point Beach, RRN – Rocky Run, SFL – South Fond Du Lac, SS – Switching Station, WES - Weston. SS-EDG #1 is W-1C, SS-EDG #2 is 796L41a

2 The fault is applied at the first named terminal of the faulted element unless otherwise noted (i e 90%) All faults modeled were 3-phase faults IC034 in parenthesis refers to studies with IC034 included

3 CCT = Critical Clearing Time (cycles). Red cell indicates actual equipment clearing times that are inadequate.

4 In the Units Unstable columns, all units unstable at a specific generating facility are designated with only the substation name and not with specific units (i e POB instead of POB G1-2)

APPENDIX B

STABILITY RESULTS WITH ADDITION OF G165

Table B1: June 2005 Critical Clearing Times, Light-Load (50%) Stability Base Case. Line Out Of Service, Primary Clearing Time. After G165.

Item	Faulted Facilities [1,2]	Pre-existing Outage	CCT [3]	CCT	After G165 Units Unstable
1	IC034-POB	None	≥10 0		
2		SS-CDR	≥10 0		
3		SS-EDG #1	≥10 0		
4		SS-IC010	≥10 0		
5	IC034-SS	None	≥10 0		
6		FOJ-ADN	≥10 0		
7		POB-FOJ	≥10 0		
8		POB-KEW	≥10 0		
9		POB-IC007	≥10 0		
10	KEW-NAP	POB-KEW	5.0	2.5	KEW
10a	"	"		4.0	KEW
10b	"	"		4.5	KEW
	KEW-NAP	IC007-NAP			
	IC007-NAP	KEW-NAP			
	POB-KEW	IC007-NAP			
	IC007-NAP	POB-KEW			
	POB-IC034	FOJ-ADN			
11	SS-GVL	SS-CDR	5 5		

1 Table abbreviations: ADN – Arcadian, CDR – Cedarsauk, EDG – Edgewater, FOJ – Forest Junction, GVL – Granville, KEW – Kewaunee, NAP – North Appleton, POB – Point Beach, SS – Switching Station SS-EDG #1 is W-1C

2 The fault is applied at the first named terminal of the faulted element. All faults modeled were 3-phase faults

3 CCT = Critical Clearing Time (cycles) Red cell indicates actual equipment clearing times that are inadequate

4 In the Units Unstable columns, all units unstable at a specific generating facility are designated with only the substation name and not with specific units (i e. POB instead of POB G1-2)

5 10a – Kewaunee unit reduced from 568 MW net output to 540 MW net output. 10b – Kewaunee unit reduced from 568 MW net output to 530 MW net output

Table B2: June 2005 Critical Clearing Times Light-Load (50%) Stability Base Case. Intact System, Breaker Failure Clearing Time. After G165.

Item	Faulted Facilities [1,2]	Failed Circuit Breaker	Tripped Element(s) In Breaker Failure	ACT	CCT	After G165 Units Unstable
1	POB-IC007	POB-IC007 @ POB	POB BS4-5	<9 0	9 0	POB,KEW
2	POB-KEW	POB-KEW @ POB	POB BS3-4, BS2-3	Double CB, ≤5 0	8 5	POB G2
3	POB-FOJ	POB-FOJ @ POB	POB-FOJ CB#2	Double CB ≤5 0	8 5	POB,KEW
4	POB-SS (IC034)	POB-SS @ POB	POB BS1-2	Double CB ≤5.0	8 0	POB,KEW
5	FOJ-IC007	BS1-2 @ FOJ	FOJ T3	~9 0	15 0	POB, KEW, IC007, IC010, EDG, WES, IC011, IC034
6	FOJ-POB	BS6-7 @ FOJ	FOJ T1	~9 0	13 0	POB, KEW, IC007, IC010, EDG, WES, IC011, IC034
7	FOJ-ADN	BS4-5 @ FOJ	FOJ T2	~9 0	11 5	POB, KEW, IC007, IC010, EDG, WES, IC011, IC034
8	IC007-POB	BS2-3 @ IC007	IC007-NAP	~9 0	9 5	POB,KEW,IC007
9	IC007-POB	BS3-4 @ IC007	IC007-FOJ	~9 0	10 0	POB, KEW, IC007, IC010, EDG, WES, IC011, IC034
10	NAP-KEW	NAP-KEW @ NAP	NAP-FTZ, NAP T1, BS12-1	9 85	10 0	POB, KEW, IC007
11	NAP-FTZ	NAP-FTZ @ NAP	NAP-KEW, NAP T1, BS12-1	<11.0	10 0	POB, KEW, IC007
12	NAP-IC007	NAP-IC007 @ NAP	NAP-IC011, NAP T3, BS23-3	≤9 6	11 0	POB, KEW, IC007,IC010,EDG
13	NAP-IC011	NAP-IC007 @ NAP	NAP-IC007, NAP T3, BS23-3	8 6	8.5	POB, KEW, IC007,IC010,EDG
14	KEW-NAP	KEW-NAP @ KEW	KEW-NAP CB#2	Double CB ≤5 0	9 0	POB,KEW
15	KEW-POB	KEW-POB @ KEW	KEW-POB CB#2, T10	Double CB ≤5 0	9 0	KEW
16	RRN T1 (345)	BS6-1 @ RRN	RRN-IC011	9.25	11 5	POB, KEW, IC007, IC010, EDG, IC011, IC034
17	RRN-ARP	BS1-8 @ RRN	RRN T1	11.25	13 5	POB, KEW, IC007, IC010, EDG, WES, IC011, IC034
18	RRN-ARP	BS8-V @ RRN	RRN-WES	11.25	13 5	WES
19	RRN-WES	BSV-4 @ RRN	RRN T4	11 25	14 0	IC011 ST
20	RRN-WES	BS8-V @ RRN	RRN-ARP	11.25	15 0	IC011 ST
21	SS-POB (IC034)	BS3-4 @ SS	SS-EDG #1	~9 0	8.5	POB,KEW,IC007,IC034
22	SS-POB (IC034)	BS2-3 @ SS	SS-IC010 (W-1B)	~9 0	8.0	POB, KEW, IC007, IC010, WES, IC011, IC034
22a	SS-IC034 @ IC034	BS2-3 @ SS	SS-IC010 (W-1B)	~9 0	10.0	POB, KEW, IC007, IC010, WES, IC011, IC034
23	SS-IC010	BS1-2 @ SS	SS-GVL	~9 0	9.0	POB, KEW, IC007, IC010, EDG, WES, IC011, IC034
24	SS-CDR	BS4-5 @ SS	SS-EDG #1	~9 0	8.5	POB, KEW, IC007, IC010, EDG, WES, IC011, IC034
25	SS-EDG #1	BS3-4 @ SS	SS-POB (IC034)	~9 0	8.0	POB, KEW, IC007, IC034
25a	SS-EDG #1 @ 90%	BS3-4 @ SS	SS-POB (IC034)	~9 0	10.5	POB, KEW, IC007, IC034
25b	SS-EDG #1 @ EDG	BS3-4 @ SS	SS-POB (IC034)	~9.0	11.0	POB, KEW, IC007, IC034
26	SS-EDG #2	BS6-1 @ SS	SS-GVL	~9 0	8.5	POB, KEW, IC007, IC010, EDG, WES, IC011, IC034
27	SS-EDG #2	BS5-6 @ SS	SS-CDR	~9 0	8.0	POB, KEW, IC007, IC010, EDG, WES, IC011, IC034
28	EDG-SS #1	EDG-SS @ EDG	EDG T21	≤10.5	10 5	POB, KEW, IC007, IC010, EDG, WES, IC011, IC034
29	EDG-SS #2	EDG-SS @ EDG	EDG T22	≤10 5	10 5	POB, KEW, IC007, IC010, EDG, WES, IC011, IC034
30	SFL-COL	BS86-S @ SFL	SFL-IC010	≤9 5	11 0	POB, KEW, IC007, IC010, EDG, WES, IC011, IC034
31	SFL-FTZ	BS92-S @ SFL	SFL-COL	≤10 5	12.0	IC010 ST
32	SFL 345-138 #1/#2	BS53-S @ SFL	SFL-IC010	≤10 0	11 0	IC010 ST
33	IC010-SFL	BS1-2 @ IC010	IC010 CT	~9 0	10 5	IC010 ST
34	IC010-SFL	BS2-3 @ IC010	IC010 CT & ST	~9 0	14.0	IC010 CT
35	CDR-GVL	BS3-4 @ CDR	CDR-SS		≥18 0	none
36	IC034-POB	BS2-3 @ IC034	IC034-SS, IC034 isolated		13 5	EDG G4
37	IC034-POB	BS1-2 @ IC034	IC034 generation		13.5	EDG G4
38	IC034-SS	BS2-3 @ IC034	IC034-POB, IC034 isolated		≥18 0	none
39	IC034-SS	BS1-2 @ IC034	IC034 generation		≥18 0	none

1 Table abbreviations: ADN – Arcadian, ARP – Arpin, COL – Columbia, CDR – Cedarsauk, EDG – Edgewater, FOJ – Forest Junction, FTZ – Fitzgerald, GVL – Granville, KEW – Kewaunee, NAP – North Appleton, POB – Point Beach, RRN – Rocky Run, SFL – South Fond Du Lac, SS – Switching Station, WES - Weston SS-EDG #1 is W-1C, SS-EDG #2 is 796L41a.

2 The fault is applied at the first named terminal of the faulted element unless otherwise noted (i e. 90%). All faults modeled were 3-phase faults IC034 in parenthesis refers to studies with IC034 included

3 CCT = Critical Clearing Time (cycles) Red cell indicates actual equipment clearing times that are inadequate

4 In the Units Unstable columns, all units unstable at a specific generating facility are designated with only the substation name and not with specific units (i e POB instead of POB G1-2)

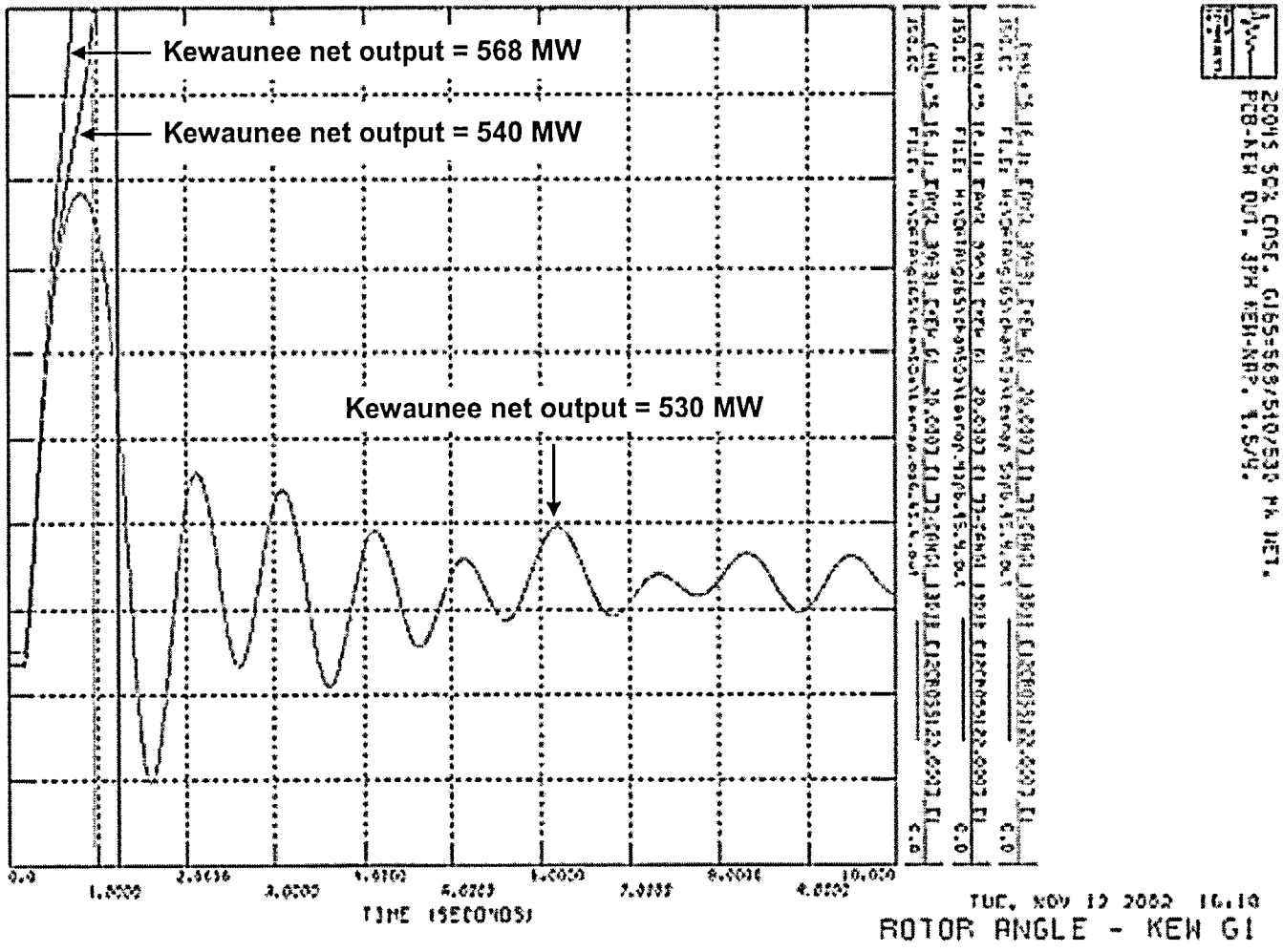

Figure B1: Kewaunee Relative Rotor Angle Response, Kewaunee-Point Beach 345 kV Out-Of-Service,
Fault Kewaunee-N. Appleton 345 kV. 568 MW Vs. 540 MW Vs. 530 MW Net Output.

ATTACHMENT 2

NUCLEAR MANAGEMENT COMPANY, LLC
KEWAUNEE NUCLEAR PLANT
DOCKET 50-305

March 14, 2003

Letter from Thomas Coutu (NMC)

To

Document Control Desk (NRC)

Response to Request for Additional Information

Cover Page for Erratum to Interim Interconnection Evaluation Study Report for the Kewaunee Nuclear Power Plant dated March 13, 2003

Errata to the:

Interim Interconnection Evaluation Study Report
Generator Interconnection Request G165 (#37239-01)
35 MW Increase at the Nuclear Generation Facility
in Kewaunee County, Wisconsin
Revision 0
December 12, 2002.

The following errata are being issued for page 9 of Revision 0 of the Interconnection Evaluation Study report, dated 12/12/2002. It recognizes the changes that have occurred with respect to the Transmission Service Requests that are associated with G165 since the Interim Interconnection Evaluation Study report was issued.