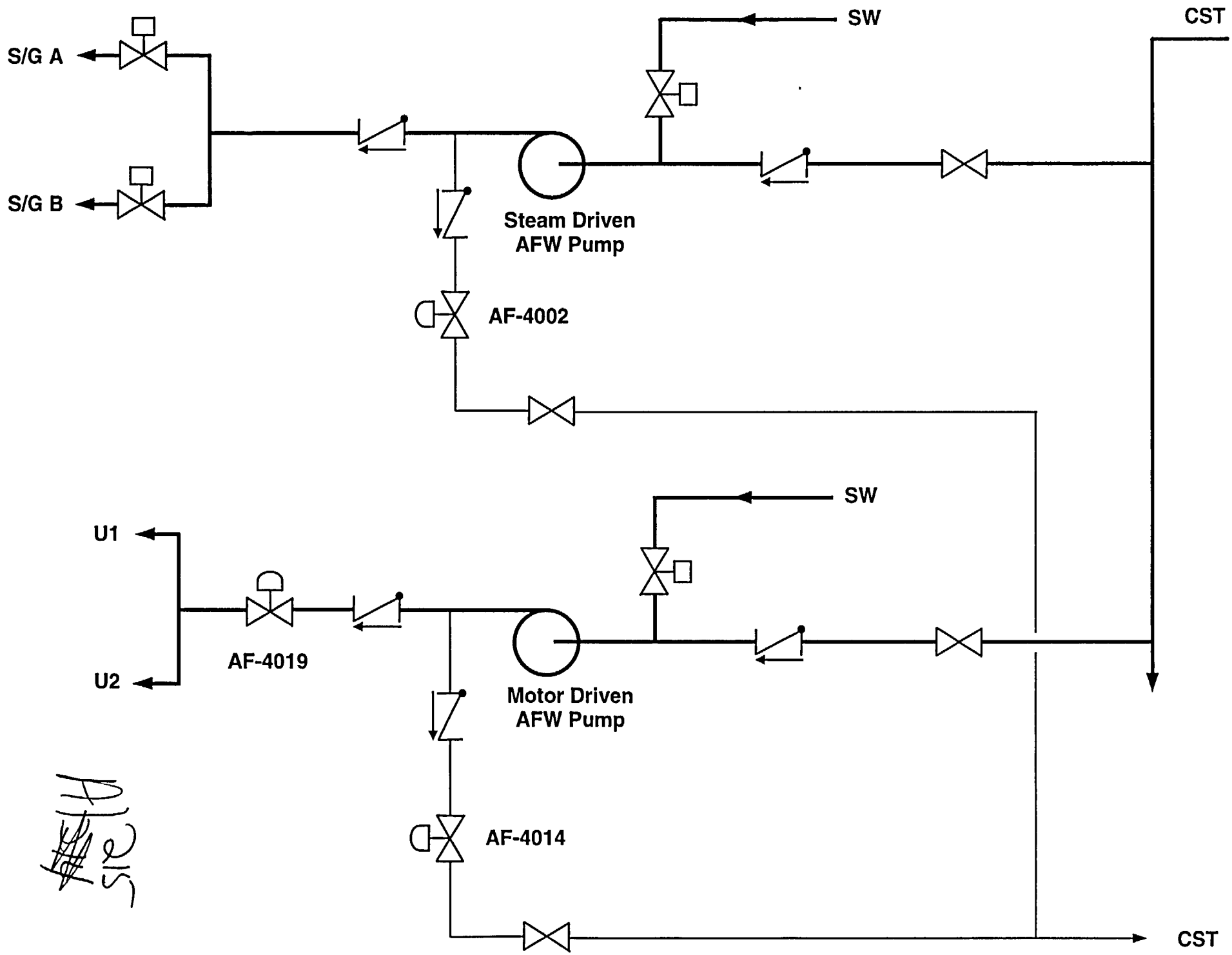
S/G A
S/G B
SW
CST
Steam Driven
AFW Pump
AF-4002
SW
U1
U2
AF-4019
Motor Driven
AFW Pump
AF-4014
CST