Rev. 6
15.6.76

265 c
265 d
265 e
265 f
265 g
265 h
265 i
265 j
265 k
265 l
265 m

BLANK PAGE

3. ONE METER DROP ON A PUNCH

One assumes that the impact occurs at the level of the drain pipe orifice.

3.1. Dynamic study (See Fig. 5.E.1.)

The packaging is represented by a cylinder with circular cross section.

- Mass of the cylinder : $M = 35\ 450$ kg
- Length of the cylinder : $H = 4.8$ m
- Diameter of the cylinder : $d = 1.0$ m

Let G be the center of gravity of the cylinder.

Distance of the point of impact to the center of gravity :

$$l = 2.3 \text{ m}$$

Inertia of the cylinder with respect to an axis perpendicular to the plane of that of Fig. 5.E.5 and passing through G :

$$I = M \left(\frac{5}{16} d^2 + \frac{1}{3} H^2\right) = 2.83 \times 10^5 \text{ kg} \times \text{m}^2$$

- Angular velocity of the packaging around its center of gravity : w

- Corresponding relative velocity : $W = w \times l$

- Relative velocity of the punch with respect to the shell of the packaging : u

- Velocity of the center of gravity of the packaging : V

At the moment of impact, the packaging is horizontal and its velocity is :

$$V_o = (2g)^{1/2} = 4.43 \text{ m/s}$$

At the time t after the impact, the velocity of the center of gravity is :

$$V = V_o + gt$$

The velocity of penetration of the punch is :

$$u = V - W = W - w_1$$

On the other side : $\frac{dw}{dt} = \frac{F \times l \times g}{I}$

One has therefore : $w = \frac{F \times l \times g \times t}{I}$

u becomes zero at a time given by the equality :

$$t = \frac{V_o}{g(\frac{Fl^2}{I} - 1)}$$

The penetration of the punch is equal to :

$$p \text{ (mm)} = \frac{1000}{(\frac{Fl^2}{I} - 1)}$$

3.2. Application

3.2.1. Force (F) corresponding to the collapse of the drain orifice and its reinforcements (see Fig. 5.E. 2)

- Cross section of the drain orifice (tube Ø 66/76 mm stainless steel) :

$$S_1 = 1115 \text{ mm}^2$$

- Cross section of the carbon steel reinforcements :

$$S_2 = 6215 \text{ mm}^2$$

- Useful cross section of the bottom plate (stainless steel)

$$S_3 = 3200 \text{ mm}^2$$

$$F = 38.6 \times S_2 + 49.2 \ (S_1 + S_3) = 4.52 \times 10^5 \text{ daN}$$

3.2.2. Time to stop (t) and penetration (p) of the punch

One utilizes the formula of the preceding paragraph :

$$\frac{Fl^2}{I} = 8.45$$

$$t = 0.06 \text{ s}$$

$$p = 134 \text{ mm}$$

3.3. Conclusion

The penetration of the punch is limited and does not reach the drain closure (quick disconnect).

The lead poured around the tube Ø 66/76 mm and the gussets of the base of the reinforcement of this tube prevents their buckling in the vicinity of the resisting sleeve.

The drain closure (quick disconnect), which is placed in the recess of the resisting sleeve, is therefore not subject to damage by the buckling of the outer parts of the 66/76 mm tube and its reinforcements.

4. BEHAVIOUR OF THE TN9 FUEL COMPARTMENTS IN THE CONDITIONS OF THE 9 METERS DROP

4.1. Objective

We shall verify that the fuel compartments of the TN 9 packaging do not suffer damages in the conditions of the 9 meter drop in horizontal position.

4.2. Assumptions

a) Each group of 2 or 3 compartments (cells, as defined in Chapter II)is assumed to deform freely, neglecting possible restraints from adjacent lead, copper plates and compartments.

b) The most severe drop conditions concern the group of 3 compartments and a drop upon the transport trunnions.

c) The maximum temperature of the compartments is t''_6 = 291°C (556°F), i.e. TN9 maximum compartment temperature (refer to Chapter IV).
At that temperature, the yield strength of the material (stainless steel 304 L) is 11.1 hb (Ref. ASME Code).

4.3. Method

Refer to Fig. 5.E. 3

The group of 3 fuel compartments constitutes a structure that may be for the considered orientation, assimilated to a 3 floor-frame (A-B-C-D-E-F-G-H) having its horizontal beams C-F and B-G uniformly loaded and its nodes A and H fixed to the ground.

At an extremity X of any beam XY, we have :

$$M_{XY} = m_{XY} - \frac{2EI}{l} (2\varphi_X + \varphi_Y)$$

Where :

M_{XY} = actual moment at extremity X of the beam XY
m_{XY} = moment assuming both extremities X and Y fixed
φ_X and φ_Y = actual rotation angle of the beam extremities
E = Young modulus
I = beam inertia
l = beam length

As such an equation may be established for each beam extremity and the algebric sum of moments at nodes A-D-C-D-E-F-G is nil, we have a system of equations which permits to obtain the rotation angle and moment at any beam extremity. Then we may calculate the bending and compression stresses and compare them to the allowable limit.

4.4. Calculations

a) Equation

Using the following notations :

- q : uniform load applied to a horizontal beam (function of the mass of the beam and supported fuel assembly).

- I, I', I" : inertia of the beams ($I' = \frac{I}{\alpha}$; $I'' = \frac{I}{\gamma}$)

We have : $m_{BG} = m_{CF} = -\frac{ql^2}{12}$

$\varphi_A = \varphi_H = 0$

$\varphi_E = -\varphi_D \qquad \varphi_F = -\varphi_C \qquad \varphi_G = -\varphi_B$

That permits to simplify the equation system which is reduced to :

. at node B : $M_{BA} + M_{BC} + M_{BG} = -\frac{ql^2}{12} - \frac{2EI}{l}\left[(1+\frac{4}{\alpha})\varphi_B + \frac{1}{\alpha}\varphi_C\right] = 0$

. at node C : $M_{CD} + M_{CB} + M_{CF} = -\frac{ql^2}{12} - \frac{2EI}{l}\left[(1+\frac{4}{\alpha})\varphi_C + \frac{1}{\alpha}\varphi_B + \frac{1}{\alpha}\varphi_D\right] = 0$

. at node D : $M_{DE} + M_{DC} = -\frac{2EI}{l}\left[(\frac{1}{\gamma} + \frac{2}{\alpha})\varphi_D + \frac{1}{\alpha}\varphi_C\right] = 0$

b) Application to the calculation of bending stresses caused by static load

We have : $E = 2 \times 10^4$ hb $\qquad l = 150$ mm

- Weight of a fuel assembly per unit length : $q_1 = 72 \times 10^{-3}$ daN/mm

- Weight of beam 12 mm thick per unit length: $q_2 = 15 \times 10^{-3}$ daN/mm

$$q = \frac{q_1 + q_2}{1} = 0.59 \times 10^{-3} \text{ daN} \times \text{mm}^2$$

- Beam inertia :

Beam thickness (mm)	Inertia (mm^4)
t = 12	I = 144
t = 4	I' = 5.33 (α = 27)
t = 6	I" = 18 (γ = 8)

By resolution of the equations in paragraph a), we obtain :

$$\varphi_B = -22.8 \times 10^{-6} \text{ rad}$$

$$\varphi_C = -22.9 \times 10^{-6} \text{ rad}$$

$$\varphi_D = 4.3 \times 10^{-6} \text{ rad}$$

- Bending moment at extremity of beam BG :

$$M_{BG} = -0.18 \text{ daN} \times \text{mm}$$

- Bending moment at center of beam BG :

$$M = M_{BG} + \frac{ql^2}{8} = 1.48 \text{ daN} \times \text{mm}$$

- Corresponding bending stress :

$$n = 0.062 \text{ hb}$$

- Maximum bending moments and stress in beams AB, BC, CD and DE :

Beam	M daN x mm	I mm^4	t mm	n hb
AB	0.07	5.33	4	0.026
BC	0.11	5.33	4	0.041
CD	0.07	5.33	4	0.026
DE	0.02	18	6	0.004

The minimum safety factor with respect to yield strength is : $K = \frac{11.1}{0.062} = 180.$

c) Safety factor with respect to buckling of the vertical beams

The formula page 263, Vol. I of Ref. [40] permits to calculate the allowable compression stress (σ_c) in the vertical beams AB and BC, taking into account the bending moment at their extremities and material yield strength (11.1 hb).

The calculations are summarized in the following table :

Beam	AB	BC
t = thickness (mm)	4	4
A = section area (mm)	4	4
M = moment (daN x mm)	0.026	0.11
P = compression (daN)	87×10^{-3}	43.5×10^{-3}
$e = \frac{M}{P}$ (mm)	0.3	2.5
I = inertia (mm^4)	5.33	5.33
$kz = \frac{I}{A}$ (mm)	1.15	1.15
$r = \frac{2I}{t \times A}$ (mm)	0.666	0.666
l = free length (mm)*	75	75
σ_c = allowable compression stress (hb)	7.15	2.22
n_c = compression stress (hb)	2.17×10^{-2}	1.08×10^{-2}
k = safety factor	329	206

(*) Beam fixed at both extremities.

4.5. Conclusion

We calculated that for static conditions, the minimum safety factor with respect to yield strength is 180. Therefore, the structure will resist to the dynamic load met during a 9 meter drop on trunnions (peak deceleration : 90 g).

5. BEHAVIOUR OF THE TN8 FUEL PARTITIONS IN THE CONDITIONS OF THE 9 METERS DROP

5.1. Objective

We shall verify that the partitions between the fuel compartments of the TN8 packaging do not suffer excessive stresses in the conditions of the 9 meters drop.

5.2. Assumptions

a) We consider the most potentially damaging orientation, i.e. horizontal drop upon trunnions.

The corresponding peak deceleration is 90 g.

b) The maximum temperature of the compartments is t''_6 = 208°C (406°F) i.e. TN8 maximum compartment temperature (refer to Chapter IV). At that temperature, the material yield strengths are :

. stainless steel 304 L : 12.2 hb
. copper : 15 hb

c) The horizontal partition is considered as a uniformly loaded beam supported at its extremity. For the determination of its modulus of inertia we only consider the external stainless steel plates (6 mm thick) taking into account the fact that they are 18 mm apart, but reducing the result by 20% as suggested by experiments related to similar composite beams [46].

5.3. Calculations

5.3.1. Unit load (q)

- Weight of fuel assembly per unit length :

  . weight of UO2 : 0.144 daN x mm
  . weight of ZR_4 : 0.026 daN x mm

- Unit load due to fuel assembly (q_1) :

$$q_1 = \frac{0.114 + 0.026}{230} = 0.608 \times 10^{-3} \text{ daN} \quad \text{mm}^2$$

- Unit load corresponding to the partition itself (q_2) :

Material	Thickness (mm)	Density (g/cm^3)	Unit load 10^{-3} daN/mm^2
Stainless Steel	12	7.85	0.0942
Lead	3	11.3	0.0390
Copper	10	8.94	0.0894
B_4C-Cu	5	5	0.0250
			q_2 = 0.248

$$q = q_1 + q_2 = 0.86 \times 10^{-3} \text{ daN/mm}^2$$

5.3.2. Bending stress

- Beam length : l = 230 mm

- Maximum bending moment : $M = \frac{ql^2}{8} = 5.69$ daN x mm

- Section inertia modulus : $\frac{I}{v} = 0.8 \times \frac{(30)^3 - (18)^3}{12 \times 15} = 94 \text{ mm}^3$

- Maximum bending stress : n = 0.06 hb

- Safety factor with respect to yield strength : K = 200.

5.4. Conclusion

We verified that for static conditions, the minimum safety factor with respect to yield strength is 200.

Therefore, the partition will resist to the dynamic load met during a 9 meter drop (peak deceleration : 90 g).

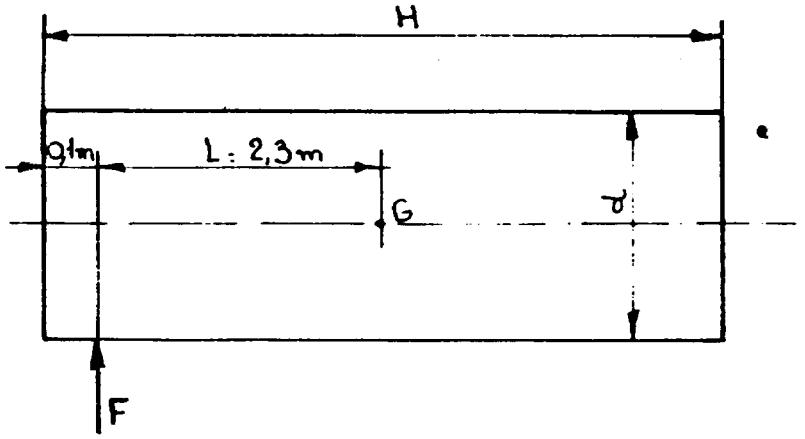

Fig. 5.E.1

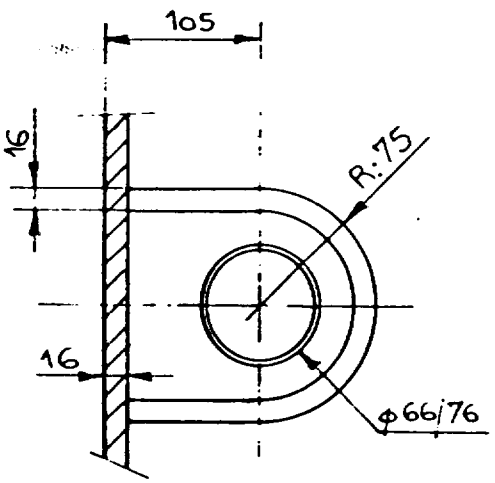

Fig 5.E.2

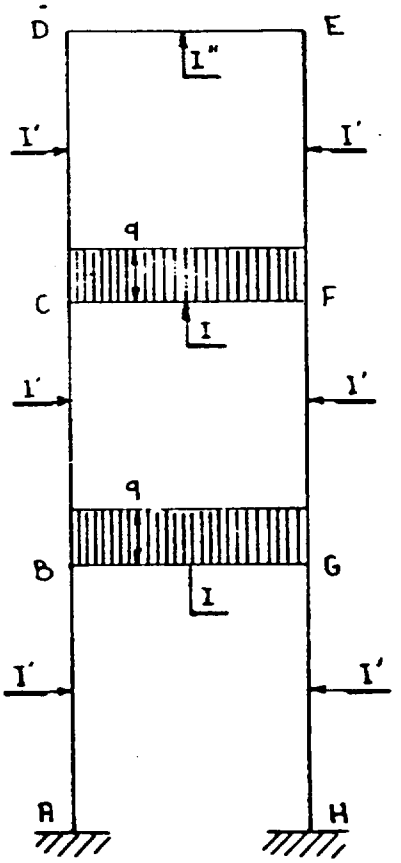

Fig. 5.E.3

N° 9317.6 rd. A le 14.6.76.

6. TN-8L STRUCTURAL EVALUATION, ACCIDENT CONDITIONS

The demonstration of the structural adequacy of the TN-8 and TN-9 packagings to withstand the regulatory accident conditions was based primarily on tests with a 1/2 scale model. The effect on the 1/2 scale model test results of eliminating 46 rows of fins from the TN-8L is evaluated below.

The fins were not a factor in absorbing energy during the 30 ft. free drops. The end covers and drums protrude approximately 1 in. (23.75 mm) beyond the periphery of the fins and the trunnions extend out from the drums more than 3 in.(80mm). Deformation of the end covers, trunnions and drums absorbed all the impact energy. Since the fins did not deform, deletion of fins for the TN-8L will not reduce the energy absorbing capability of the packaging for the regulatory accident 30 ft. free drop test conditions.

The loaded weight of the TN-8L is approximately 34,680 kg which is 1000 kg less than the design weight of the loaded TN-8. The weight of the 1/2 scale model was approximately 4300 kg. The scale factor for deceleration based on these weights for the model and TN-8L is 2.01. The structural evaluation of the TN-8 was based on a scaling factor of 2 which results in a slightly higher deceleration than would be experienced with a scaling factor of 2.01 for the TN-8L. Thus the decelerations of the TN-8L will be slightly lower and the previous SAR evaluation is conservative.

The fins of the 1/2 scale model are not a true model representation of the TN-8 or TN-9 fins. The 1/2 scale model had 58 rows of 2 mm thick plates, whereas the TN-8 and TN-9 have 150 and 116 rows, respectively of 2 mm thick

plates. The TN-8/9 plates are slotted to a depth of 250 mm and then twisted to orient the fins circumferentially. The fins for the TN-8L are constructd similarly to the TN-8/9 fins and the 104 rows are nearly the same as the 116 rows for the TN-9.

The fins on the model were deformed as a result of the horizontal drop on a punch bar. The bar pushed aside 4 to 5 fin plates near the point of impact and bent over one fin plate and pierced it. The bar also compressed the resin layer which was not completely penetrated. The outer shell was not deformed and there was no evidence that the inner cavity, which represent the containment boundary, experienced any deformation. The extent to which the fins on the model contributed to demonstrating that the TN-8/9's can withstand the drop on a punch bar also demonstrated that the TN-8L can withstand such a drop.

The test results for the drop on a punch bar have not been analyzed formally, but it is quite obvious that the energy absorption by the fins is negligible in comparison to the energy which would be required to breach the containment, i.e. full penetration of resin, puncture of the 10 mm outer steel shell, penetration of 5 mm of concrete and 90 mm of lead and failure of the 6 mm thick stainless steel compartment wall.

As described in Chapter V, the hypothetical fire condition will lead to lower temperatures for the TN-8L than for the TN-8. Both the lower temperatures and smaller temperature differences contribute to increasing the margins of safety for structural considerations.

Based on the forgoing, it is concluded that the model test results and the structural evaluation of the containment vessel and other components remain valid and are conservative for the TN-8L design.

CHAPTER VI (deleted)

BLANK PAGES

- CHAPTER VII -

CONFORMITY TO REQUIREMENTS SPECIFIC TO FISSILE CLASS II PACKAGES

In this chapter, we show that the packages constituted by:
TN8 packaging loaded with 3 P, PP, P1 or PP1 assemblies;
TN8L packagings loaded with 3 P, PP, P1 or PP1 assemblies;
and TN9 packaging loaded with 7 B or 7 B1 assemblies,
meet the provisions specific to fissile class II packages as defined in Paragraph 604 b) of the IAEA regulations [2], with the allowable number of packages being equal to 10.*

1. MAINTENANCE OF THE ESSENTIAL CHARACTERISTICS OF THE PACKAGES UNDER THE CONDITIONS SPECIFIED IN PARAGRAPHS 709 to 714 - Section VII of [2] - Paragraph 615

1.a) Modifications of volume and spacing
In Chapter V, it was shown that the tests specified (water spray with impact, 0.3 m free drops, compression, penetration) do not change the external packaging measurements by more than 5 %, nor modify the dimensions of the containment system.

1.b) Water penetration
It was shown in Chapter V that the containment system remains leaktight under far more severe test conditions than those required.

1.c) Configuration of contents and geometry of the containment system
We showed in Chapter V that the geometry of the containment system is not altered by the tests for Type B packagings. In addition

(*) With regard to the Regulatory Requirements of the United States (49 CFR - Part 173.389) [3], the packages belong to fissile class III, because their transport index exceeds 20.

calculations in Annex B to Chapter III show that the partitions between the fuel assemblies will not bend or deform during these tests.

As a result of tests performed with the 1/4 scale model which contained actual fuel pins (see Annex A to Chapter IV), we may assume that the fuel element would not be severely damaged after several 0.3 m drops. As the actual condition of the fuel pins at loading is not precisely determined, there is always the possibility that a pin could become damaged during transport. Generally, this damage will be limited to some small cracks in the cladding but even if a pin is broken into pieces, the fuel pellets, in most cases, would remain in place because the clearance between adjacent pins is less than the minimum pellet dimension. In case an outer pin is broken, it also most likely would remain in place. Since the clearance between the outer row of pins and the housing wall is greater than the minimum pellet dimension, some pellets may shift to another position but in all cases this would result in a decrease of reactivity because that would locally reduce the section of the fissile region without change of its moderation ratio. In addition, according to the location of the damaged pin, the poison efficiency would be improved (better local moderation) or the effects of lead reflection reduced. Similarly, distortion of a pin in any position would not change the average moderation in the local area and therefore the average reactivity would remain the same as long as the spacing grids (respectively 7 and 6 grids for "P" and "B" assemblies) remain intact. In case of a severe accident these may be squeezed and the moderation ratio reduced. Reactivity would decrease because the "P" and "B" arrays are already under-moderated as evident by comparing their moderation ratio $\left(\frac{VH2O}{VUO2}\right)$ = 2.04 for "P" and 1.49 for "B") to the ratio giving maximum $k\infty$ for considered enrichments (between 2.5 and 3).

From the above, since squeezing the array reduces k_∞ and enlargement of the array is not foreseeable, we conclude that the normal array is the most reactive to be considered.

2. INDIVIDUAL PACKAGE CONSIDERED IN ISOLATION - § 617

We must show that the package is subcritical by an adequate safety margin after type B tests and assuming its cavity filled with water.

According to § 608 (foot note 6) such a margin is reached if the mass of the fissile contents does not exceed 80 % of the critical one.

This condition is satisfied when the infinite reactivity coefficient of the array (k_∞) and the effective reactivity coefficient (K eff) are related by the inequality [30] :

$$K\ eff \leqslant \frac{K_\infty}{1 + 1.16\ (K_\infty - 1)}$$

Therefore for both packages, TN8 and TN9, we calculated these reactivity coefficients, taking into account the following regulatory assumptions :

2.a) Assumptions

1. The package is considered in its normal condition with the exception of water leakage into its cavity. We already showed that under the conditions of tests specified in § 709 to 714 the geometry of the containment system is not modified and that the configuration of the contents cannot shift to a more reactive one.

These conclusions also apply to the consequences of tests specified in § 718 to 720 followed by those specified in § 722 to 724 since we showed in Chapter V that the contents cannot escape from the containment system which remains tight and keeps its dimensions.

2. All the void spaces around the fuel pins are filled with water (this condition is fulfilled during the packaging loading/unloading, but not during transport, which is performed dry).

3. The fuel assemblies are not irradiated and in conformity with the description given in Chapter I *. This assumption is conservative because for the considered enrichment and type of array, burn-up causes an important decrease of reactivity.

4. The efficiency of neutron poisons (steel, copper, boron carbide) does not vary with time.

   In fact, the flux of thermal neutrons emitted by the fuel is very small (less than 5×10^3 n/cm^2 s in the center of the package) and the capture of these neutrons will not significantly deplete the poisons even after a long time.

   For example, the depletion rate of Boron 10 contained in the B4C-Cu plates of the TN8 packaging will not exceed 10^{-14} g/g per hour of utilization.

   The boron contents of the B4C-Cu sintered plates and their dimensions and position with respect to the fuel compartments will be checked before lead casting.

(*) Note that a fuel assembly with one or several pins missing at the time of loading is excluded from this analysis.

2.b) Calculation method and validity of reactivity coefficients

The transport cross sections of a homogeneous medium equivalent to the heterogeneous medium formed by the pin array in water are calculated with APOLLO Program [31]. For this calculation, one used the 16 energy groups and atom densities listed in Annex A to this Chapter. The so determined cross sections * are introduced in MONTE CARLO calculations using MORET Program [43] to obtain K_∞ for the array and K eff for the package.

The calculation method using APOLLO + MORET Programs has been verified by comparison with the results of experiments concerning, among others, arrays of low enrichment UO2 pins and poisoning effects of Boron (see Annex B to this chapter).

2.c) Calculations

Calculations related to TN8 package and TN9 package are given in Annexes C and D to this Chapter, respectively.

3. ASSEMBLIES OF PACKAGES - § 619

The allowable number attributed to the TN8 and TN9 package designs was arbitrarily fixed at 10 because it seemed unnecessary to seek a larger number.

In order to satisfy § 619 a) we have to demonstrate that an assembly of 50 undamaged packages would be subcritical, the packages being stacked together in any arrangement without added material between them and assuming close reflection on all sides of the stack by the equivalent of water.

(*) These cross sections are also listed in Annex A to this Chapter.

"Undamaged" means the condition in which the packages are designed to be presented for transport. As the transport is to be performed "dry", there is no water inside the package.

Therefore, neutron interaction between the packages is only possible if the packagings are practically transparent to thermal neutrons.

Due to large amounts of steel, copper, resin and Boron in the packaging walls, we conclude that actual interaction is negligible. Therefore the K eff of an assembly of packages practically does not differ from that of a single one which is very low because the critical mass of UO2 enriched to 3.33 % is very large when in the absence of water.

In order to satisfy § 619.b), we have to demonstrate that an assembly of 20 "damaged" packages shall be subcritical when the packages are stacked together in any arrangement assuming close water reflection on all sides and homogeneous hydrogeneous moderation between packages.

"Damaged" means the package condition after the tests specified in Section VII - § 709 to 714 and 718 to 720 followed by tests in § 722 to 724 or § 709 to 714 followed by § 721.

In fact, reference [35] indicates that the increase of reactivity due to the interposition of hydrogeneous materials between the subcritical package assemblies is offset by neutron absorption equivalent to 3 mm of steel.

Since the wall of each "damaged" packaging includes 6 mm of stainless steel as well as other materials, we can assume that the K eff of the assembly of packages does not exceed that of the assembly of their contents.

In Chapter V, it was shown that the "damaged" packages are still tight and dry.

Therefore, the K eff of the above assembly of contents is very low. We conclude that 20 "damaged" packages will not be critical regardless of the reflection and coupling.

Thus, the TN8 and TN9 package designs meet the requirements specific to fissile class II packages for an allowable number of 10.

274
275

Blank Pages

- ANNEX A TO CHAPTER VII -

MICROSCOPIC CROSS SECTIONS AS A FUNCTION OF NEUTRON ENERGY

CONTENTS OF THIS ANNEX :

1. Table I : Neutron energy groups

2. Tables II-1 to II-10 : Transport cross section of chemical elements : Hydrogen, Boron, Carbon, Oxygen, Aluminum, Silicon, Chromium, Iron, Nickel, Copper.

3. Tables III-1 to III-7 : Transport cross section of packaging regions : Water, Lead, Copper, Stainless Steel, Thermal Insulation, copper fins + resin , B4C-Cu plates.

4. Tables IV-1 to IV-2 : Transport cross section of the homogeneous medium equivalent to :
   - Water moderated "P" lattice
   - Water moderated "P1" lattice

TABLE I - NEUTRON ENERGY GROUP

Group Number	Lower Energy Limit of the Group (eV)	Group Number	Lower Energy Limit of the Group (eV)
1	3×10^6	9	100
2	1.4×10^6	10	30
3	9×10^5	11	10
4	4×10^5	12	3
5	1×10^5	13	1
6	1.7×10^4	14	0.4
7	3×10^3	15	0.1
8	550	16	0.025

TABLE II - 1

TRANSPORT CROSS SECTIONS OF THE CHEMICAL ELEMENTS

Hydrogen - Atomic Mass = 1.0080

	TOTAL	NSF	ABS	TRANSFERTS					
1	0.00000	0.0	0.0	-0.84000	0.76900	0.23900	0.13900	0.14400	0.0490
2	0.97000	0.0	0.0	-0.96100	0.69000	0.69000	0.41500	0.11600	0.0200
3	1.35000	0.0	0.0	-1.90600	1.79600	1.07600	0.30000	0.05200	0.0120
4	1.22000	0.0	0.0	-1.93750	2.82700	0.78100	0.13200	0.02200	0.0055
5	1.60000	0.0	0.0	-1.86810	4.04100	0.68400	0.11700	0.02160	0.0045
6	2.20000	0.0	0.0	-2.09610	6.02200	1.04500	0.18700	0.02960	0.0125
7	3.32000	0.0	0.0	-2.69120	7.37200	1.34900	0.20900	0.06080	0.0304
8	4.60000	0.0	0.00100	-2.96900	7.88000	1.22000	0.36000	0.12200	0.0520
9	6.06900	0.0	0.00400	-2.94200	6.71900	1.92000	0.68000	0.19200	0.0960
10	6.07200	0.0	0.00600	-4.97980	7.75700	2.71900	0.78000	0.23190	0.1559
11	6.67000	0.0	0.01400	-5.44890	8.49400	2.41800	0.71900	0.36000	0.1199
12	6.81700	0.0	0.02500	-5.04700	7.90600	2.36400	1.18200	0.38700	0.0
13	7.23000	0.0	0.04500	-5.55000	7.40900	3.68400	1.24200	0.0	0.0
14	8.84700	0.0	0.07000	-6.53900	9.58200	3.33400	0.0	0.0	0.0
15	9.92000	0.0	0.13000	-4.23000	11.02000	0.0	0.0	0.0	0.0
16	29.20000	0.0	0.29000	29.00000	0.0	0.0	0.0	0.0	0.0

SCATTERING GROUPES (A 15)

19.9990	19.9960	19.9920	19.9860	20.3750	20.3550	20.3200	20.3700

TABLE II - 2

TRANSPORT CROSS SECTIONS OF THE CHEMICAL ELEMENTS

Boron - Atomic Mass = 10.82

.....TOTAL	.....NSF	.....ABS	.....TRANSFERIS					
1 1.52000	0.0	0.04000	0.81000	0.67000	0.0	0.0	0.0	0.0
2 1.79000	0.0	0.06000	1.31000	0.42000	0.0	0.0	0.0	0.0
3 2.14000	0.0	0.04000	1.22000	0.88000	0.0	0.0	0.0	0.0
4 [illegible]	0.0	0.08000	1.69000	0.50000	0.0	0.0	0.0	0.0
5 3.10000	0.0	0.27000	2.51000	0.36000	0.0	0.0	0.0	0.0
6 4.08000	0.0	0.61000	3.11000	0.36000	0.0	0.0	0.0	0.0
7 4.97000	0.0	1.50000	3.10000	0.37000	0.0	0.0	0.0	0.0
8 6.87000	0.0	3.40000	3.09000	0.38000	0.0	0.0	0.0	0.0
9 11.50000	0.0	8.03000	3.09000	0.38000	0.0	0.0	0.0	0.0
10 19.89999	0.0	16.42999	2.94000	0.53000	0.0	0.0	0.0	0.0
11 32.00000	0.0	29.03000	2.89000	0.58000	0.0	0.0	0.0	0.0
12 55.00000	0.0	52.03000	2.94000	0.53000	0.0	0.0	0.0	0.0
13 55.00000	0.0	52.03000	2.89000	0.58000	0.0	0.0	0.0	0.0
14 154.00000	0.0	150.53000	2.77000	0.70000	0.0	0.0	0.0	0.0
15 275.00000	0.0	272.52979	3.01000	0.46000	0.0	0.0	0.0	0.0
16 692.00000	0.0	689.52979	3.47000	0.0	0.0	0.0	0.0	0.0

SCATTERING(GROUPS & A 15)

3.7000 3.7000 3.7000 3.7000 3.7000 3.7000 3.7000 3.7000

TABLE II - 3

TRANSPORT CROSS SECTIONS OF THE CHEMICAL ELEMENTS

Carbon - Atomic Mass = 12.01

	TOTAL	NSF	ABS	TRANSFERTS					
1	1.25000	0.0	0.0	0.71500	0.51500	0.0	0.0	0.0	0.0
2	1.42000	0.0	0.0	1.10000	0.31400	0.0	0.0	0.0	0.0
3	2.26000	0.0	0.0	1.40400	0.85000	0.0	0.0	0.0	0.0
4	2.92000	0.0	0.0	2.32600	0.60400	0.0	0.0	0.0	0.0
5	3.59000	0.0	0.0	3.15700	0.43300	0.0	0.0	0.0	0.0
6	4.25000	0.0	0.0	3.84900	0.40100	0.0	0.0	0.0	0.0
7	4.44000	0.0	0.0	4.01200	0.42800	0.0	0.0	0.0	0.0
8	4.34000	0.0	0.0	3.91200	0.42800	0.0	0.0	0.0	0.0
9	4.34000	0.0	0.0	3.91200	0.42800	0.0	0.0	0.0	0.0
10	4.34000	0.0	0.0	3.73700	0.60300	0.0	0.0	0.0	0.0
11	4.34000	0.0	0.0	3.67800	0.66200	0.0	0.0	0.0	0.0
12	4.44000	0.0	0.0	3.82400	0.61600	0.0	0.0	0.0	0.0
13	4.44000	0.0	0.0	3.76300	0.67700	0.0	0.0	0.0	0.0
14	4.44000	0.0	0.0	3.62700	0.81300	0.0	0.0	0.0	0.0
15	4.42070	0.0	0.00070	3.50200	0.53800	0.0	0.0	0.0	0.0
16	4.42500	0.0	0.00300	3.43600	0.0	0.0	0.0	0.0	0.0

SCATTERING(OFCUPES & A 15)

4.6000 4.6000 4.6000 4.6000 4.7000 4.7000 4.7000 4.6990

Rev. 5
10.1.76
276c

TABLE II - 4

TRANSPORT CROSS SECTION OF THE CHEMICAL ELEMENTS

Oxygen - Atomic Mass = 16

.....TOTAL	.....ASF	.....ABS	.....TRANSFERTS						
1	0.03000	0.0	0.04000	0.86600	0.42400	0.0	0.0	0.0	0.0
2	1.16000	0.0	0.0	0.98900	0.19100	0.0	0.0	0.0	0.0
3	3.23000	0.0	0.0	2.32800	0.90200	0.0	0.0	0.0	0.0
4	3.63000	0.0	0.0	3.07400	0.55600	0.0	0.0	0.0	0.0
5	3.71000	0.0	0.0	3.37300	0.33700	0.0	0.0	0.0	0.0
6	3.26000	0.0	0.0	3.02900	0.23100	0.0	0.0	0.0	0.0
7	3.55000	0.0	0.0	3.29500	0.25500	0.0	0.0	0.0	0.0
8	3.64000	0.0	0.0	3.37000	0.27000	0.0	0.0	0.0	0.0
9	3.64000	0.0	0.0	3.37000	0.27000	0.0	0.0	0.0	0.0
10	3.64000	0.0	0.0	3.26000	0.38000	0.0	0.0	0.0	0.0
11	3.64000	0.0	0.0	3.22600	0.41400	0.0	0.0	0.0	0.0
12	3.64000	0.0	0.0	3.26000	0.38000	0.0	0.0	0.0	0.0
13	3.64000	0.0	0.0	3.22600	0.41400	0.0	0.0	0.0	0.0
14	3.64000	0.0	0.0	3.14200	0.49800	0.0	0.0	0.0	0.0
15	3.64000	0.0	0.0	3.30900	0.33100	0.0	0.0	0.0	0.0
16	3.64120	0.0	0.00020	3.64100	0.0	0.0	0.0	0.0	0.0
SCATTERING(GROUPES & A 15)	3.8000	3.8000	3.8000	3.8000	3.8000	3.8000	3.8000	3.8000	3.8000

TABLE II - 5

TRANSPORT CROSS SECTIONS OF THE CHEMICAL ELEMENTS

Aluminum - Atomic Mass = 26.97

.....TOTAL	.....NSF	.....ABS	.....TRANSFERTS						
1 1.00590	0.0	0.01590	1.10000	0.56000	0.10000	0.03000	0.0	0.0
2 1.02230	0.0	0.00030	1.06200	0.23000	0.11000	0.02000	0.00090	0.0
3 1.14040	0.0	0.00040	1.61000	0.36000	0.14000	0.01000	0.0	0.0
4 2.72070	0.0	0.00070	2.47000	0.73000	0.0	0.0	0.0	0.0
5 2.05200	0.0	0.00200	2.05000	0.14000	0.0	0.0	0.0	0.0
6 1.45500	0.0	0.00500	1.36000	0.07000	0.0	0.0	0.0	0.0
7 1.46500	0.0	0.00200	1.39800	0.06300	0.0	0.0	0.0	0.0
8 1.36500	0.0	0.00100	1.30400	0.06000	0.0	0.0	0.0	0.0
9 1.36000	0.0	0.00300	1.30300	0.06000	0.0	0.0	0.0	0.0
10 1.35000	0.0	0.00600	1.27600	0.08400	0.0	0.0	0.0	0.0
11 1.36000	0.0	0.01000	1.26400	0.09200	0.0	0.0	0.0	0.0
12 1.36500	0.0	0.01700	1.28400	0.08400	0.0	0.0	0.0	0.0
13 1.41000	0.0	0.03000	1.28600	0.09400	0.0	0.0	0.0	0.0
14 1.46000	0.0	0.05000	1.29500	0.11500	0.0	0.0	0.0	0.0
15 1.46000	0.0	0.08000	1.30600	0.07400	0.0	0.0	0.0	0.0
16 1.52000	0.0	0.20000	1.36000	0.0	0.0	0.0	0.0	0.0

SCATTERING GROUPS E A 151

1.3590	1.3970	1.3940	1.3900	1.4030	1.4200	1.4100	1.4200

TABLE II - 6

TRANSPORT CROSS SECTIONS OF THE CHEMICAL ELEMENTS

Silicon - Atomic Mass = 28.06

....TOTAL	.....NSF	.....ABS	.....TRANSFERTS						
1 2.02530	0.0	0.17000	0.71000	0.36140	0.06450	0.01940	0.0	0.0
2 2.55260	0.0	0.0	1.64030	0.22700	0.10860	0.01970	0.00090	0.0
3 2.50400	0.0	0.0	1.73340	0.40510	0.15070	0.01080	0.0	0.0
4 2.66680	0.0	0.0	2.60510	0.26370	0.0	0.0	0.0	0.0
5 3.14100	0.0	0.0	3.93610	0.20490	0.0	0.0	0.0	0.0
6 1.82750	0.0	0.00950	1.72940	0.08500	0.0	0.0	0.0	0.0
7 2.10700	0.0	0.0	2.01610	0.09090	0.0	0.0	0.0	0.0
8 2.82600	0.0	0.0	2.70360	0.12440	0.0	0.0	0.0	0.0
9 2.17450	0.0	0.0	2.07880	0.09570	0.0	0.0	0.0	0.0
10 2.15600	0.0	0.0	2.02280	0.13320	0.0	0.0	0.0	0.0
11 2.15270	0.0	0.00570	2.00970	0.14630	0.0	0.0	0.0	0.0
12 2.26640	0.0	0.01240	2.02360	0.13240	0.0	0.0	0.0	0.0
13 2.17600	0.0	0.02000	2.00910	0.14690	0.0	0.0	0.0	0.0
14 2.18820	0.0	0.03220	1.98020	0.17580	0.0	0.0	0.0	0.0
15 2.24020	0.0	0.09220	2.04040	0.11560	0.0	0.0	0.0	0.0
16 2.31000	0.0	0.16000	2.15600	0.0	0.0	0.0	0.0	0.0

SCATTERING(ACUPES & A 15)

2.5000 2.5000 2.2000 2.2000 2.2000 2.2000 2.2000 2.2000

Rev. 5
10.1.76
276f

TABLE II - 7

TRANSPORT CROSS SECTIONS OF THE CHEMICAL ELEMENTS

Chromium - Atomic Mass = 52.01

	TOTAL	REF	ABS	TRANSFERS						
1	2.44000	0.0	0.01000	1.25000	0.57000	0.26000	0.25000	0.09000		0.010
2	2.26000	0.0	0.02000	1.47000	0.35000	0.26000	0.15000	0.01000		0.0
3	2.17000	0.0	0.02000	1.79000	0.28000	0.07000	0.01000	0.0		0.0
4	2.02000	0.0	0.02000	2.45000	0.15000	0.0	0.0	0.0		0.0
5	3.55000	0.0	0.04000	3.38000	0.13000	0.0	0.0	0.0		0.0
6	[illegible]	0.0	0.11000	3.00000	0.06000	0.0	0.0	0.0		0.0
7	12.92000	0.0	0.07000	12.68000	0.17000	0.0	0.0	0.0		0.0
8	4.67000	0.0	0.02000	4.58000	0.09000	0.0	0.0	0.0		0.0
9	4.24000	0.0	0.03000	4.12000	0.09000	0.0	0.0	0.0		0.0
10	4.23000	0.0	0.06000	4.06000	0.13000	0.0	0.0	0.0		0.0
11	4.25000	0.0	0.11000	4.05000	0.14000	0.0	0.0	0.0		0.0
12	4.33000	0.0	0.19000	4.03000	0.13000	0.0	0.0	0.0		0.0
13	4.47000	0.0	0.34000	3.99000	0.14000	0.0	0.0	0.0		0.0
14	4.44000	0.0	0.55000	3.92000	0.17000	0.0	0.0	0.0		0.0
15	5.21000	0.0	0.99000	4.10000	0.12000	0.0	0.0	0.0		0.0
16	6.10000	0.0	3.10000	3.00000	0.0	0.0	0.0	0.0		0.0
SCATTERING(GROUPS & A 15)	5.0000	4.6500	4.2000	4.2000	4.2000	4.2000	4.2000	4.2000		

TABLE II - 8

TRANSPORT CROSS SECTIONS OF THE CHEMICAL ELEMENTS

Iron - Atomic Mass = 55.85

	TOTAL	ASF	ABS	TRANSFERTS					
1	2.24700	0.0	0.00700	1.44000	0.50000	0.20000	0.10000	0.0	0.0
2	2.20000	0.0	0.00500	1.49500	0.40000	0.20000	0.10000	0.0	0.0
3	1.96000	0.0	0.01000	1.47000	0.23000	0.23000	0.02000	0.0	0.0
4	2.29000	0.0	0.01000	2.15700	0.12300	0.0	0.0	0.0	0.0
5	2.44000	0.0	0.01000	2.35900	0.07100	0.0	0.0	0.0	0.0
6	2.23000	0.0	0.01000	2.17000	0.05000	0.0	0.0	0.0	0.0
7	5.65000	0.0	0.01000	5.52000	0.12000	0.0	0.0	0.0	0.0
8	7.11400	0.0	0.01100	6.95200	0.15100	0.0	0.0	0.0	0.0
9	10.96000	0.0	0.02700	10.70800	0.23300	0.0	0.0	0.0	0.0
10	11.36400	0.0	0.05500	10.97700	0.33200	0.0	0.0	0.0	0.0
11	11.36400	0.0	0.09800	10.90100	0.36500	0.0	0.0	0.0	0.0
12	11.37000	0.0	0.17000	10.87100	0.32500	0.0	0.0	0.0	0.0
13	11.37000	0.0	0.31000	10.70200	0.35800	0.0	0.0	0.0	0.0
14	11.37000	0.0	0.51000	10.43100	0.42500	0.0	0.0	0.0	0.0
15	11.37000	0.0	0.91000	10.39000	0.27000	0.0	0.0	0.0	0.0
16	13.67000	0.0	2.53000	10.54000	0.0	0.0	0.0	0.0	0.0

SCATTERING(GROUPS 8 A 15)

7.7890	11.0730	11.4450	11.4020	11.3300	11.1900	10.9900	10.7900

TABLE II - 9

TRANSPORT CROSS SECTIONS OF THE CHEMICAL ELEMENTS

Nickel - Atomic Mass = 58.69

.....TOTAL.....	.....SF.....	.....ABS.....	.....TRANSFERTS.....						
1	2.29000	0.0	0.27000	1.22000	0.50000	0.20000	0.10000	0.0	0.0
2	2.34000	0.0	0.10000	1.64000	0.30000	0.20000	0.10000	0.0	0.0
3	2.23000	0.0	0.01000	2.22000	0.25000	0.05000	0.0	0.0	0.0
4	2.45000	0.0	0.01000	2.34000	0.10000	0.0	0.0	0.0	0.0
5	3.38000	0.0	0.01000	3.29000	0.08000	0.0	0.0	0.0	0.0
6	5.17000	0.0	0.02000	5.05000	0.10000	0.0	0.0	0.0	0.0
7	1.95000	0.0	0.38000	1.39100	0.25000	0.0	0.0	0.0	0.0
8	15.66000	0.0	0.04000	15.32000	0.32000	0.0	0.0	0.0	0.0
9	16.67999	0.0	0.05000	16.29999	0.33000	0.0	0.0	0.0	0.0
10	16.72000	0.0	0.10000	16.15999	0.47000	0.0	0.0	0.0	0.0
11	17.29999	0.0	0.18000	16.59000	0.53000	0.0	0.0	0.0	0.0
12	17.31000	0.0	0.31000	16.51999	0.48000	0.0	0.0	0.0	0.0
13	17.99999	0.0	0.56000	16.42000	0.53000	0.0	0.0	0.0	0.0
14	18.20000	0.0	0.94000	16.62000	0.64000	0.0	0.0	0.0	0.0
15	19.00000	0.0	1.60000	16.96999	0.43000	0.0	0.0	0.0	0.0
16	21.26999	0.0	4.60000	16.66999	0.0	0.0	0.0	0.0	0.0

SCATTERING(GROUPS & A 15)

15.8200	16.8200	16.8200	17.3200	17.1900	17.1400	17.4600	17.6000

TABLE II - 10

TRANSPORT CROSS SECTIONS OF THE CHEMICAL ELEMENTS

Copper - Atomic Mass = 63.57

	TOTAL	NSF	ABS	TRANSFERTS					
1	2.361CC	0.0	0.00100	1.17000	0.61000	0.29000	0.49000	0.0	0.0
2	2.434CC	0.0	0.00400	1.70000	0.37000	0.36000	0.0	0.0	0.0
3	2.769CC	0.0	0.00500	2.31000	0.39000	0.0	0.0	0.0	0.0
4	3.13CCC	0.0	0.00600	3.10000	0.23000	0.0	0.0	0.0	0.0
5	4.37000	0.0	0.01000	4.25000	0.11000	0.0	0.0	0.0	0.0
6	6.20000	0.0	0.03000	6.06000	0.11000	0.0	0.0	0.0	0.0
7	7.22000	0.0	0.04000	7.05000	0.12000	0.0	0.0	0.0	0.0
8	8.31000	0.0	0.04000	8.12000	0.15000	0.0	0.0	0.0	0.0
9	7.19000	0.0	0.05000	7.01000	0.13000	0.0	0.0	0.0	0.0
10	7.49000	0.0	0.10000	7.00000	0.19000	0.0	0.0	0.0	0.0
11	7.47000	0.0	0.18000	7.08000	0.21000	0.0	0.0	0.0	0.0
12	7.61000	0.0	0.31000	7.11000	0.19000	0.0	0.0	0.0	0.0
13	8.07000	0.0	0.56000	7.29000	0.22000	0.0	0.0	0.0	0.0
14	8.29000	0.0	0.94000	7.10000	0.25000	0.0	0.0	0.0	0.0
15	8.75000	0.0	1.80000	6.79000	0.16000	0.0	0.0	0.0	0.0
16	10.48000	0.0	3.34000	7.12000	0.0	0.0	0.0	0.0	0.0

SCATTERING GROUPS (A 15)

8.5700 7.2100 7.2700 7.3700 7.3600 7.5900 7.4300 7.0200

Rev. 5
10.1.76

276j

TABLE III - 1

TRANSPORT CROSS SECTIONS OF THE DIFFERENT REGIONS

Water : Density 1.0

Number of Atoms : Hydrogen : 0.06686276
Oxygen : 0.03343141

G.	TOTAL	NU-FISSION	ABSORPTION	I-I	I-I+1	I-I+2	I-I+3	I-I+4	I-I+5
1	0.19358	0.0	0.00134	-0.02721	0.06559	0.01598	0.01598	0.00963	0.0032
2	0.10431	0.0	0.0	-0.03119	0.05252	0.04614	0.02775	0.00776	0.0011
3	0.19691	0.0	0.0	-0.04961	0.15024	0.07194	0.02006	0.00348	0.0008
4	0.24371	0.0	0.0	-0.02678	0.20761	0.05222	0.00883	0.00147	0.0003
5	0.32462	0.0	0.0	-0.01214	0.28146	0.04573	0.00782	0.00144	0.0003
6	0.45667	0.0	0.0	-0.03889	0.41037	0.06987	0.01250	0.00198	0.0008
7	0.54192	0.0	0.0	-0.06978	0.50144	0.09020	0.01397	0.00407	0.0020
8	0.56740	0.0	0.00007	-0.08585	0.53590	0.08157	0.02407	0.00816	0.0034
9	0.56760	0.0	0.00027	-0.08405	0.45828	0.12838	0.04547	0.01284	0.0064
10	0.56780	0.0	0.00053	-0.22398	0.53136	0.18180	0.05215	0.01551	0.0104
11	0.56807	0.0	0.00094	-0.25648	0.58177	0.16167	0.04807	0.02407	0.0080
12	0.57749	0.0	0.00167	-0.22847	0.54132	0.15806	0.07903	0.02588	0.0
13	0.57836	0.0	0.00301	-0.26324	0.50923	0.24632	0.08304	0.0	0.0
14	0.57950	0.0	0.00468	-0.33217	0.68407	0.22292	0.0	0.0	0.0
15	0.58438	0.0	0.00869	-0.17221	0.74789	0.0	0.0	0.0	0.0
16	2.08014	0.0	0.01940	2.06074	0.0	0.0	0.0	0.0	0.0

Rev. 5
10.1.76
276k

TABLE III - 2

TRANSPORT CROSS SECTIONS OF THE DIFFERENT REGIONS

Lead : Density : 11.35

Number of Atoms : 0.03299119

G	TOTAL	NON-FISSION	ABSORPTION	I-1	I-1+1	I-1+2	I-1+3	I-1+4	I-1+5
1	[illegible]	0.0	0.0	0.20764	0.01452	0.0	0.0	0.0	0.0
2	[illegible]	0.0	0.0	0.21444	0.01015	0.0	0.0	0.0	0.0
3	[illegible]	0.0	0.0	0.17815	0.00165	0.0	0.0	0.0	0.0
4	[illegible]	0.0	0.0	0.24743	0.00264	0.0	0.0	0.0	0.0
5	[illegible]	0.0	0.0	0.36290	0.00330	0.0	0.0	0.0	0.0
6	[illegible]	0.0	0.0	0.36290	0.00330	0.0	0.0	0.0	0.0
7	[illegible]	0.0	0.0	0.36290	0.00330	0.0	0.0	0.0	0.0
8	[illegible]	0.0	0.0	0.36290	0.00330	0.0	0.0	0.0	0.0
9	[illegible]	0.0	0.00005	0.36290	0.00330	0.0	0.0	0.0	0.0
10	[illegible]	0.0	0.00008	0.36290	0.00330	0.0	0.0	0.0	0.0
11	[illegible]	0.0	0.00067	0.36290	0.00330	0.0	0.0	0.0	0.0
12	[illegible]	0.0	0.00109	0.36290	0.00330	0.0	0.0	0.0	0.0
13	[illegible]	0.0	0.00093	0.36290	0.00330	0.0	0.0	0.0	0.0
14	[illegible]	0.0	0.00111	0.36290	0.00330	0.0	0.0	0.0	0.0
15	[illegible]	0.0	0.00178	0.36290	[illegible]	0.0	0.0	0.0	0.0
16	[illegible]	0.0	0.00660	0.36290	0.0	0.0	0.0	0.0	0.0

Rev. 5
10.1.76
2761

TABLE III - 3

TRANSPORT CROSS SECTIONS OF THE DIFFERENT REGIONS

Copper : Density : 8.89

Number of Atoms : 0.08422911

G	TOTAL	NU-FISSION	ABSORPTION	I-I	I-I+1	I-I+2	I-I+3	I-I+4	I-I+5
1	0.21571	0.0	0.00008	0.09855	0.05138	0.02443	0.04127	0.0	0.0
2	0.20501	0.0	0.00034	0.14319	0.03116	0.03032	0.0	0.0	0.0
3	0.22784	0.0	0.00042	0.19457	0.03285	0.0	0.0	0.0	0.0
4	0.27257	0.0	0.00051	0.26111	0.01937	0.0	0.0	0.0	0.0
5	0.36808	0.0	0.00084	0.35797	0.00927	0.0	0.0	0.0	0.0
6	0.52222	0.0	0.00253	0.51043	0.00927	0.0	0.0	0.0	0.0
7	0.60813	0.0	0.00337	0.59382	0.01095	0.0	0.0	0.0	0.0
8	0.69994	0.0	0.00337	0.68394	0.01263	0.0	0.0	0.0	0.0
9	0.60561	0.0	0.00421	0.59045	0.01095	0.0	0.0	0.0	0.0
10	0.61403	0.0	0.00842	0.58960	0.01600	0.0	0.0	0.0	0.0
11	0.62919	0.0	0.01516	0.59634	0.01769	0.0	0.0	0.0	0.0
12	0.64098	0.0	0.02611	0.59887	0.01600	0.0	0.0	0.0	0.0
13	0.67973	0.0	0.04717	0.61403	0.01853	0.0	0.0	0.0	0.0
14	0.69826	0.0	0.07918	0.59803	0.02106	0.0	0.0	0.0	0.0
15	0.73700	0.0	0.15161	0.57192	0.01348	0.0	0.0	0.0	0.0
16	0.88104	0.0	0.28133	0.59971	0.0	0.0	0.0	0.0	0.0

Rev. 5
10.1.76
276m

TABLE III - 4

TRANSPORT CROSS SECTIONS OF THE DIFFERENT REGIONS

Stainless Steel : density : 7.85

Number of Atoms : Iron : 0.06096694
Nickel : 0.00804063
Chromium : 0.01636506

G	TOTAL	NU-FISSION	ABSORPTION	I-I	I-I+1	I-I+2	I-I+3	I-I+4	I-I+5
1	0.19534	0.0	0.00276	0.11806	0.04383	0.01806	0.01099	0.00147	0.0001
2	0.19155	0.0	0.00144	0.12839	0.03253	0.01969	0.00936	0.00016	0.0
3	0.17535	0.0	0.00102	0.13676	0.02061	0.01557	0.00138	0.0	0.0
4	0.20219	0.0	0.00102	0.19042	0.01076	0.0	0.0	0.0	0.0
5	0.23403	0.0	0.00134	0.22559	0.00710	0.0	0.0	0.0	0.0
6	0.22940	0.0	0.00257	0.22200	0.00483	0.0	0.0	0.0	0.0
7	0.56762	0.0	0.00481	0.55523	0.01243	0.0	0.0	0.0	0.0
8	0.63622	0.0	0.00132	0.62165	0.01325	0.0	0.0	0.0	0.0
9	0.87219	0.0	0.00254	0.85132	0.01833	0.0	0.0	0.0	0.0
10	0.89691	0.0	0.00514	0.86561	0.02615	0.0	0.0	0.0	0.0
11	0.90230	0.0	0.00922	0.86427	0.02881	0.0	0.0	0.0	0.0
12	0.90356	0.0	0.01597	0.86155	0.02605	0.0	0.0	0.0	0.0
13	0.90714	0.0	0.02897	0.84979	0.02838	0.0	0.0	0.0	0.0
14	0.91547	0.0	0.04765	0.83373	0.03408	0.0	0.0	0.0	0.0
15	0.94242	0.0	0.08455	0.83699	0.02188	0.0	0.0	0.0	0.0
16	1.06721	0.0	0.24196	0.82524	0.0	0.0	0.0	0.0	0.0

TABLE III - 5

TRANSPORT CROSS SECTIONS OF THE DIFFERENT REGIONS

Thermal Insulation : Density : 1.1313

Number of Atoms : Hydrogen : 0.02462349
Oxygen : 0.02381484
Iron : 0.00113651
Aluminum : 0.00385336
Silicon : 0.00385336

G	TOTAL	NU-FISSION	ABSORPTION	I-I	I-I+1	I-I+2	I-I+3	I-I+4	I-I+5
1	0.06107	0.0	0.00168	0.00855	0.03315	0.00675	0.00619	0.00355	0.0012
2	0.0[illegible]97	0.0	0.00001	0.01431	0.02375	0.01806	0.01049	0.00286	0.0004
3	0.12902	0.0	0.00001	0.02306	0.06901	0.02788	0.00749	0.00128	0.0003
4	0.15565	0.0	0.00001	0.04751	0.08497	0.01923	0.00325	0.00054	0.0001
5	0.19187	0.0	0.00002	0.06254	0.10894	0.01684	0.00288	0.00053	0.0001
6	0.22079	0.0	0.00007	0.03489	0.15445	0.02573	0.00460	0.00073	0.0003
7	0.26059	0.0	0.00002	0.03163	0.18833	0.03322	0.00515	0.00150	0.0007
8	0.27207	0.0	0.00004	0.03049	0.20135	0.03006	0.00886	0.00300	0.0012
9	0.27401	0.0	0.00014	0.03301	0.17274	0.04728	0.01674	0.00473	0.0023
10	0.27746	0.0	0.00028	-0.01980	0.20127	0.06695	0.01921	0.00571	0.0038
11	0.27758	0.0	0.00052	-0.03234	0.22034	0.05954	0.01770	0.00886	0.0029
12	0.28116	0.0	0.00092	-0.02154	0.20493	0.05821	0.02910	0.00953	0.0
13	0.28160	0.0	0.00165	-0.03497	0.19363	0.09071	0.03058	0.0	0.0
14	0.28226	0.0	0.00262	-0.06171	0.25926	0.08209	0.0	0.0	0.0
15	0.28452	0.0	0.00490	-0.00065	0.28027	0.0	0.0	0.0	0.0
16	0.63773	0.0	0.01141	0.82632	0.0	0.0	0.0	0.0	0.0

Rev. 5
10.1.76

TABLE III - 6

TRANSPORT CROSS SECTIONS OF THE DIFFERENT REGIONS

Copper fins and Resin : Density : 1.7820

Number of Atoms : Hydrogen : 0.05965734
Oxygen : 0.00309374
Copper : 0.00844482
Boron : 0.00031977
Carbon : 0.03525120

G	TOTAL	NU-FISSION	ABSORPTION	I-I	I-I+1	I-I+2	I-I+3	I-I+4	I-I+5
1	0.10548	0.0	0.00014	-0.01209	0.07071	0.01671	0.01840	0.00859	0.002
2	0.13270	0.0	0.00005	-0.00051	0.05608	0.04420	0.02476	0.00692	0.001
3	0.19253	0.0	0.00006	-0.03711	0.14368	0.06419	0.01790	0.00310	0.000
4	0.25174	0.0	0.00008	0.00264	0.19377	0.04659	0.00787	0.00131	0.000
5	0.35492	0.0	0.00017	0.04697	0.25843	0.04081	0.00698	0.00129	0.000
6	0.52378	0.0	0.00045	0.07218	0.37515	0.06234	0.01116	0.00177	0.000
7	0.6[illegible]69	0.0	0.00082	0.05160	0.45689	0.08048	0.01247	0.00363	0.001
8	0.63430	0.0	0.00148	0.04077	0.48741	0.07278	0.02148	0.00728	0.003
9	0.62650	0.0	0.00323	0.03300	0.41798	0.11454	0.04057	0.01145	0.005
10	0.63121	0.0	0.00658	-0.09521	0.48697	0.16221	0.04653	0.01383	0.009
11	0.63600	0.0	0.01164	-0.12472	0.53331	0.14425	0.04289	0.02148	0.007
12	0.65647	0.0	0.02075	-0.06522	0.49631	0.14103	0.07051	0.02309	0.0
13	0.67392	0.0	0.03684	-0.12598	0.46919	0.21978	0.07409	0.0	0.0
14	0.69550	0.0	0.06025	-0.19168	0.62803	0.19890	0.0	0.0	0.0
15	0.74271	0.0	0.11013	-0.04626	0.67884	0.0	0.0	0.0	0.0
16	2.21864	0.0	0.25971	1.95854	0.0	0.0	0.0	0.0	0.0

TABLE III - 7

TRANSPORT CROSS SECTIONS OF THE DIFFERENT REGIONS

Sintered B4C-Cu plates : Density : 3.5657

Number of Atoms : Copper : 0.01883412
Boron : 0.05402813
Carbon : 0.01338382
Lead : 0.00098939

G	TOTAL	NU-FISSION	ABSORPTION	I-I	I-I+1	I-I+2	I-I+3	I-I+4	I-I+5
1	0.15249	0.0	0.00218	0.08160	0.05502	0.00546	0.00923	0.0	0.0
2	0.16853	0.0	0.00332	0.12403	0.03441	0.00678	0.0	0.0	0.0
3	0.20221	0.0	0.00226	0.13355	0.06640	0.0	0.0	0.0	0.0
4	0.23031	0.0	0.00444	0.18824	0.03951	0.0	0.0	0.0	0.0
5	0.31206	0.0	0.01478	0.26879	0.02850	0.0	0.0	0.0	0.0
6	0.40507	0.0	0.03352	0.34456	0.02699	0.0	0.0	0.0	0.0
7	0.47491	0.0	0.08180	0.36485	0.02827	0.0	0.0	0.0	0.0
8	0.59675	0.0	0.18445	0.38312	0.02918	0.0	0.0	0.0	0.0
9	0.82581	0.0	0.43479	0.36221	0.02881	0.0	0.0	0.0	0.0
10	1.28153	0.0	0.88957	0.35158	0.04038	0.0	0.0	0.0	0.0
11	1.96569	0.0	1.57185	0.34960	0.04425	0.0	0.0	0.0	0.0
12	3.21233	0.0	2.81695	0.35482	0.04056	0.0	0.0	0.0	0.0
13	5.28211	0.0	4.98278	0.35469	0.04464	0.0	0.0	0.0	0.0
14	8.54689	0.0	8.15058	0.34281	0.05351	0.0	0.0	0.0	0.0
15	15.14099	0.0	14.75822	0.35362	0.03514	0.0	0.0	0.0	0.0
16	36.62840	0.0	36.23657	0.39183	0.0	0.0	0.0	0.0	0.0

TABLE IV - 1

TRANSPORT CROSS SECTIONS OF THE MEDIUM EQUIVALENT

TO WATER MODERATED "P" LATTICE

G.....	TOTAL....	NU-FISSION..	ABSORPTION.....	I-I.....	I-I+1.....	I-I+2.....	I-I+3.....	I-I+4.....	I-I+5.
1	0.14016	0.01425	0.00614	0.04703	0.04671	0.01145	0.01625	0.01076	0.0015
2	0.15555	0.01038	0.00433	0.04206	0.04028	0.03930	0.02444	0.00415	0.0007
3	0.26[illegible]34	0.00181	0.00176	0.06757	0.12908	0.05246	0.01006	0.00191	0.0004
4	0.26867	0.00076	0.00143	0.09756	0.14050	0.02331	0.00468	0.00102	0.0001
5	0.34952	0.00084	0.00152	0.15076	0.15898	0.03054	0.00668	0.00083	0.0001
6	0.44946	0.00119	0.00332	0.11659	0.26475	0.05603	0.00700	0.00118	0.0004
7	0.52000	0.00210	0.00635	0.11694	0.34435	0.04178	0.00705	0.00246	0.0007
8	0.52096	0.00436	0.00954	0.15785	0.28378	0.04656	0.01623	0.00489	0.0013
9	0.54120	0.01004	0.01972	0.10489	0.28123	0.09460	0.02849	0.00791	0.0026
0	0.55324	0.02014	0.03726	-0.00016	0.36815	0.10691	0.02966	0.00991	0.0049
1	0.53159	0.02208	0.03849	-0.01960	0.35259	0.09684	0.03233	0.01609	0.0051
2	0.54060	0.01712	0.05495	-0.03600	0.34081	0.10914	0.05430	0.01740	0.0
3	0.56559	0.01595	0.01427	0.05722	0.32439	0.13993	0.02777	0.0	0.0
4	0.69505	0.03935	0.02524	0.16996	0.42804	0.07181	0.0	0.0	0.0
5	1.00471	0.10417	0.06398	0.50652	0.43421	0.0	0.0	0.0	0.0
6	1.73328	0.23025	0.13766	1.60062	0.0	0.0	0.0	0.0	0.0

TABLE IV - 2

TRANSPORT CROSS SECTIONS OF THE MEDIUM

EQUIVALENT TO WATER MODERATED "P1" LATTICE

NG	TOTAL	NU-FISSION	ABSORPTION	I-1	I-I+1	I-I+2	I-I+3	I-I+4	I-I+5
1	0.13874	0.01416	0.00610	0.04610	0.04648	0.01139	0.01616	0.01070	0.001
2	0.15297	0.01031	0.00430	0.04105	0.04008	0.03911	0.02432	0.00413	0.000
3	0.26103	0.00179	0.00177	0.06618	0.12846	0.05223	0.01001	0.00190	0.000
4	0.28616	0.00075	0.00142	0.09534	0.13985	0.02321	0.00466	0.00102	0.000
5	0.34671	0.00084	0.00152	0.14922	0.15796	0.03032	0.00663	0.00083	0.000
6	0.44619	0.00119	0.00333	0.11635	0.26232	0.05551	0.00693	0.00117	0.000
7	0.51644	0.00212	0.00640	0.11739	0.34091	0.04136	0.00698	0.00243	0.000
8	0.51802	0.00438	0.00971	0.15842	0.28085	0.04507	0.01606	0.00484	0.001
9	0.53660	0.01012	0.02009	0.10648	0.27817	0.09354	0.02817	0.00782	0.002
10	0.55545	0.02038	0.03849	0.00307	0.36377	0.10560	0.02930	0.00978	0.004
11	0.52897	0.02243	0.03980	-0.01800	0.35650	0.09571	0.03196	0.01590	0.005
12	0.53783	0.0[illegible]46	0.05739	-0.03514	0.33609	0.10784	0.05365	0.01720	0.0
13	0.55921	0.01607	0.01435	0.05794	0.32102	0.13842	0.02747	0.0	0.0
14	0.58938	0.03966	0.02339	0.16968	0.42331	0.07100	0.0	0.0	0.0
15	0.99419	0.10553	0.06466	0.50332	0.42621	0.0	0.0	0.0	0.0
16	1.71459	0.23757	0.14134	1.57325	0.0	0.0	0.0	0.0	0.0

Rev. 5
10.1.76
276s

- ANNEX B TO CHAPTER VII -

VALIDITY OF THE APOLLO AND MORET CALCULATION METHODS

The APOLLO and MORET programs are described in [31] and [43] respectively.

In this annex, we compare the results of criticality calculations using the APOLLO/MORET programs with experimental results.

1. LATTICE OF UO2 PINS WITH VARIABLE SQUARE PITCH SUBMERGED IN WATER

The pins are made of stacks of sintered U (2.73) O2 clad in stainless steel and 121.92 cm high. They are positioned in cylindrical configurations and completely submerged in water.

One obtains the following results :

H_2O/U	Volumetric ratio VH2O/VUO2	Pitch (cm)	Critical number of pins 34	Radius of critical cylinder		Keff calculated ± 0.014 (95% confidence)
				cm	inch	
2.19	1.509	1.029	3043	32.01	25.2	0.996
2.93	2.019	1.105	1851	26.82	21.1	0.999
3.87	2.67	1.194	1301	24.27	19.11	1.013
7.03	4.84	1.455	826	23.60	18.54	0.987
8.51	5.86	1.562	789.9	24.77	19.5	0.975
10.38	7.15	1.689	813	27.17	21.4	0.991

2. PARALLELEPIPED CORE OF UO2 PINS IN WATER [32]

The pins considered are the same as in (1) above. They are positioned along two parallelepipeds between which one considers a shield of

variable nature. The pins are submerged in the water and one determines a critical height of water for the considered change. In the calculations, one has thus replaced the two parallelepipeds with homogeneous mixtures to which APOLLO cross sections. One takes equally into account the portion of pins not submerged in the water by describing it as a lattice of pins in the air.

The results obtained are shown in the table on following page.

3. CONCLUSION

The calculation method using the codes APOLLO and MORET is satisfactory for criticality calculations concerning complicated fuel pin arrays with interposition of neutron shields.

Reference	H_2O/U	Pitch (cm)	Nature of the shield	Shield dimensions (cm) width + thickness + height	Critical number of pins	Critical height of water	Keff calculated ± 0.009 (95% confidence)
I A	2.5	1.0617	Water		3261	66	0.992
III A	2.5	1.0617	Aluminum	52.07 x 0.866 x 52.07	3307	73.1	1.001
IV A	2.5	1.0617	Stainless steel 304	52.07 x 0.843 x 52.07	3307	82.3	0.993
V A	2.5	1.0617	Boron stainless steel	52.07 x 0.850 x 52.07	3307	96.2	0.995
I B	4.5	1.2522	Water		1278	90.1	1.004
III B	4.5	1.2522	Aluminum	52.07 x 0.866 x 52.07	1278	96.0	0.999
IV B	4.5	1.2522	Stainless steel 304	52.07 x 0.843 x 52.07	1356	95.9	1.002
V B	4.5	1.2522	Boron stainless steel	52.07 x 0.850 x 52.07	1434	97.1	0.992

- ANNEX C TO CHAPTER VII -

DATAS AND CRITICALITY CALCULATIONS CONCERNING THE TN8 PACKAGING

1. DATAS CONCERNING THE PACKAGING AND CONTENTS

The TN8 packaging contains three (3) PWR fuel assemblies surrounded by a neutron shield of sintered B4C-Cu.* The characteristics of the assemblies which are covered herein are given as follows :

Assembly type	"P"	"P1"
- Enrichment (% U235)	3.2	3.2
- Active length (mm)	3658	3658
- Array	15 x 15	17 x 17
- Number of pins	204	264
- Array pitch (mm)	14.3	12.6
- Outside radius of the pins (mm)	5.36	4.75
- Thickness of the cladding (mm)	0.61	0.57
- Cladding material	Zr 4	Zr 4
- Pellet radius (mm)	4.68	4.10
- Density of the UO2	10.3 (1)	10.45 (1)
- Uranium weight per assembly (kg)	466	469

(1) This density has been calculated based on the weight of Uranium contained in an assembly.

2. SAFETY OF AN ISOLATED PACKAGE

One calculates Keff of a package immersed in water. This calculation entails two steps :

(*) For criticality calculations, we assumed that the density of these plates is only 3.5657 g/cm^3 whereas it is actually higher due to an increased contents of copper. Although the volumetric Boron contents is not changed the above assumption is conservative as verified by calculations.

2.1. Study of the unit cell

For this study the APOLLO Program [31] is utilized.

This cell is cylindrical, of infinite height and comprised of three coaxial regions, each having a different chemical composition. The characteristics of these different regions are given in Table I.

- For the "P" assembly having 204 pins, the total cross section of the cell is :

$$S = \frac{(1.43 \times 15)^2}{204} = \pi R^2 \qquad R = 0.847 \text{ cm}$$

- For the "P_1" assembly having 264 pins, the total cross section of the cell is :

$$S = \frac{(1.26 \times 17)^2}{264} = \pi R^2 \qquad R = 0.745 \text{ cm}$$

The APOLLO Program calculates a detailed flux distribution in the cell of the infinite array, it then balances the effective cross sections of the different regions with this flux. It thus establishes the average multigroup effective cross sections valid for the cell assembly for energy groups defined in Annex A to this chapter.

TABLE I

Region	CHARACTERISTICS OF THE REGIONS		
	Characteristics \ Type of assembly	"P" assembly Enrichment : 3.2	"P1" assembly Enrichment : 3.2
UO_2	Radius (cm)	0.468	0.418 (1)
	Number of atoms (in 10^{24} atoms per cm^3) ^{235}U	7.4457×10^{-4}	7.176×10^{-4}
	^{238}U	2.2239×10^{-2}	2.171×10^{-2}
	Oxygen	4.5985×10^{-2}	4.4869×10^{-2}
Cladding	Radius (cm)	0.536	0.475
	Number of atoms (in 10^{24} atoms per cm^3) Zr	4.1861×10^{-2}	4.1861×10^{-2}
Water	Radius (cm)	0.847 (2)	0.745 (3)
	Number of molecules (in 10^{24} molecules per cm^3) H_2O	3.3461×10^{-2}	3.3461×10^{-2}

(1) The pellet radius is considered to be the same as the inside radius of the pin, which has led to recalculating a density of UO_2 from the total weight of uranium contained in the element.

(2) (3) For calculating the radius of the water, we redistribute the water from the free volume of water around the pins.

TABLE II

CHARACTERISTICS OF THE DIFFERENT CHEMICAL MATERIALS OF THE TN8 PACKAGE

Material	Weight composition	Density	Number of atoms (10^{24} atoms/ cm^3)
Lead	100 % Lead	11.35	0.032991
Water	100 % Water	1.0	Hydrogen 0.066863 Oxygen 0.033431
Stainless steel	72 % Iron 18 % Chromium 10 % Nickel	7.85	Iron 0.060967 Chromium 0.016365 Nickel 0.008041
Cement	70 % aluminous cement contains : 38 % Al_2O_3 38 % CaO 12 % Fe_2O_3 5 % FeO 4 % SiO_2 30 % Water	1.1313	Aluminum 0.003853 Oxygen 0.023815 Iron 0.001136 Silicon(1) 0.003853 Hydrogen 0.024623 (1) The calcium has been replaced by silicon
Copper fins + Resin	50 % Copper 50 % Resin containing : 60 % Polyethylene 35.4 % polyester 71 % carbon 6 % hydrogen 23 % oxygen 4.6 % borocalcite 13.6 % boron 20 % water 66.4 % misc.	1.782	Copper 0.008415 Carbon 0.035251 Hydrogen 0.059657 Oxygen 0.003094 Boron 0.000320
Copper layer	100 % Copper	8.89	Copper 0.0842
Neutron shield of sintered B_4C + Cu	9.5 % Lead 90.5 % B_4C + Cu mixture 30.07 % boron 61.65 % copper 8.27% carbon	3.5657	Copper 0.018834 Boron 0.054028 Carbon 0.013384 Lead 0.000989

Note that the actual density of B4C-Cu plates may exceed without change of the B4C volumetric contents.

2.2. Calculation of Keff of the package

The MORET program [43] is used because it permits studies of complicated geometries without making approximations. The TN8 package, assumed to be of infinite height, is divided into simple elementary volumes. Fig. 7.C.1 presents a cross section of the packaging and defines the manner in which the division has been made starting with the intersection of cylindrical and plane surfaces. Around the lead shield one finds successively the cement (1 cm thick), a carbon steel shell (2 cm thick), a homogeneous mixture of resin and copper fins (15 cm thick) and a water reflector (15 cm thick).

The transport cross sections of each material of the structure are calculated by the MORET program to which one inputs the density of the material, the number of atoms (in 10^{24} atoms/cm^3) and the transport cross sections of the different chemical elements entering into their composition. These cross sections are given in Annex A. The characteristics of the different materials of the structure are shown in Table II.

The three fuel assemblies are replaced by parallelepipeds having a homogeneous mixture and infinite height and cross sections of 21.4 x 21.4 cm^2 for the "P" assemblies and 21.46 x 21.46 cm^2 for the "P_1" assemblies to which one applies the average transport cross sections calculated by APOLLO and given in Annex A.

2.3. Results

We have to verify :

$$Keff \leq \frac{K_\infty}{1 + 1.16\ (K_\infty - 1)}$$

The K_∞ has been calculated here for an infinite lattice of "baskets" constituted of the three assemblies in their shrouds and neutron absorbers. The MORET program calculates for each volume V, entering in the composition of this basket :

$$\Sigma_i \nu \Sigma f_i \times p_i \text{ and } \Sigma_i \Sigma a_i \times p_i$$

Where p_i is the total travel of the neutrons in the energy group i

Σf_i and Σa_i are the effective macroscopic cross sections of these neutrons in the group energy 1.

$$k_\infty = \frac{\Sigma_v \; \Sigma_i \; \nu \Sigma f_i \; \times p_i}{\Sigma_v \; \Sigma_i \; \Sigma a_i \; \times p_i}$$

The results are as follows :

Type of assembly	K_∞	2nd term of the inequality	Keff (95% confidence)
"P"	1.057	0.991	0.933 ± 0.016
"P_1"	1.054	0.992	0.924 ± 0.016

In comparing the values of the second and third columns, one confirms that the inequality is demonstrated.

3. NORMAL AND ACCIDENTAL TRANSPORT CONDITIONS

One assumes that the cavity of the packaging is not closed with the hydrogeneous material in it and that water cannot penetrate it during normal and accidental transport conditions.

Since the wall of the cavity is stainless steel, 6 mm thick, whatever the type and thickness of moderating materials outside it, the reactivity of an assembly of packagings is less than that of an assembly formed by their contents [35].

In the present case, the contents of the packaging are formed by fuel assemblies whose critical number is practically infinite in the absence of moderation.

One can conclude that the critical number of packagings (damaged or not) is practically infinite, whatever the interspersing of moderator materials.

4. CONCLUSIONS

The reduced number of fins on the TN-8L has no effect on criticality.

Fuel having higher initial helium prepressurization (types PP, PP1), does not affect criticality.

A shipment of TN8 or TN8L packages (allowable number: 10) meets the criteria for nuclear safety for fissile class II under the following conditions:

-The packagings conform to drawing TN 9317-01, Rev. J for TN8, or TN 9317-138, Rev. A for TN-8L

-They contain three (3) PWR assemblies (type "P" or "P1" with 204 pins and 264 pins respectively) with a maximum of enrichment 3.2%

-The shipments are made dry.

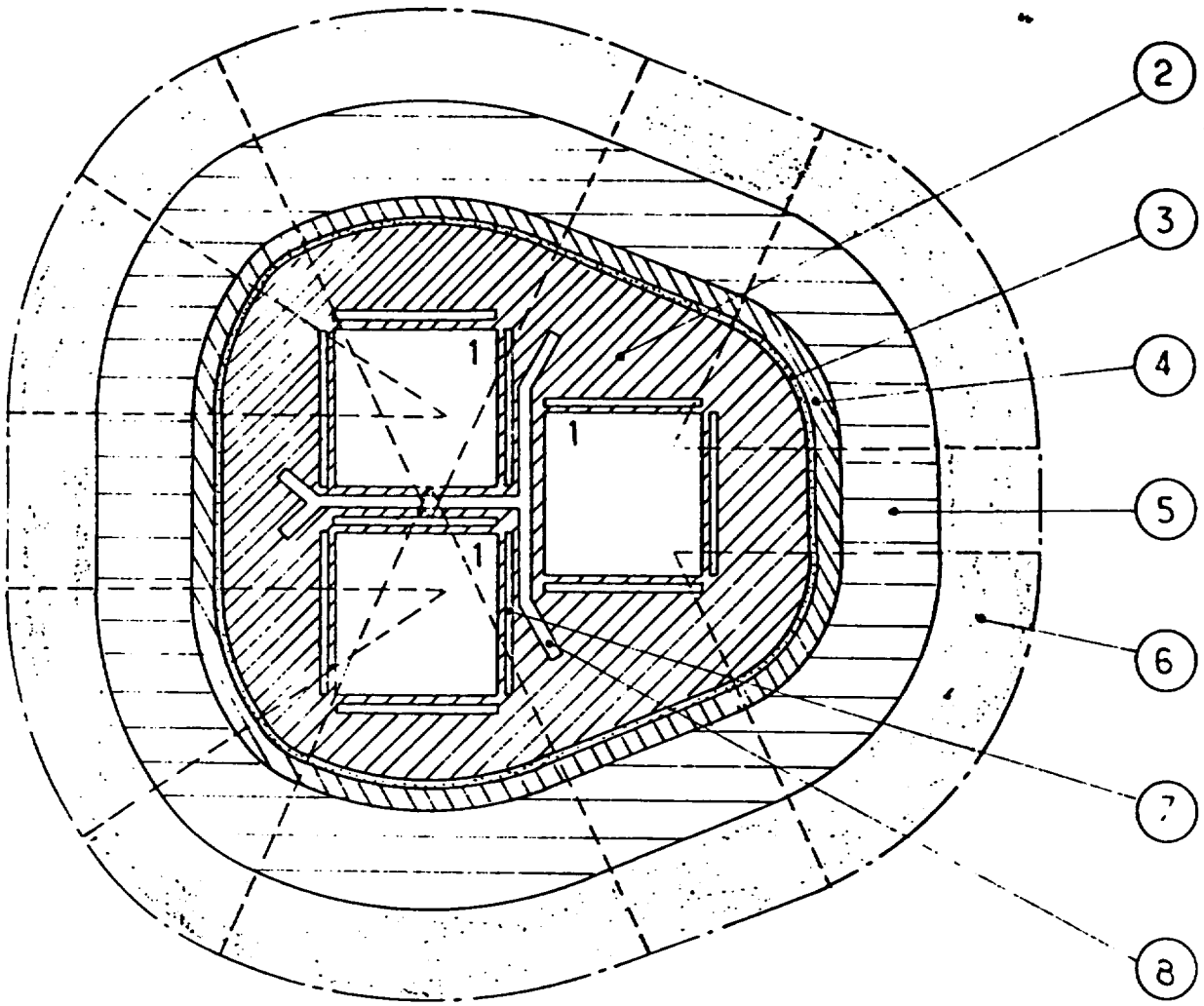

1. Compartment (Each compartment contains one fuel assembly)
2. Lead
3. Cement (1 cm)
4. Steel Shell (2 cm thick)
5. Homogeneous mixture"copper fins - borated resin" (15 cm thick)
6. Water relector (15 cm thick)
7. Copper - Boron Carbide Plates
8. Copper Plates

Fig 7.C.1

Rev. 5
10.1.76

282b
282c
282cl
282d
282e
282gf
282g
282h
282i
282j
282k
282l
282m
282n
282o
283
283a
283aa
283b
283c
284
285
285a

Blank Pages

- ANNEX D TO CHAPTER VII -

DATAS AND CRITICALITY CALCULATIONS CONCERNING THE TN9 PACKAGE

1. DATAS CONCERNING THE PACKAGE CONTENTS

The TN9 packaging is intended to transport seven (7) BWR assemblies.

The characteristics of the fuel assemblies are shown in the following table.

Type of assembly	"B"	"B1"
- Maximum enrichment (% U235)	2.65	2.65
- Active length (cm)	365.8	376
- Array	7 x 7	8 x 8
- Number of fuel pins	49	63
- Array pitch (cm)	1.874	1.625
- Outside diameter of the cladding (cm)	1.43	1.252
- Cladding material	Zr 2	Zr 2
- Pellet diameter (cm)	1.237	1.057
- Density of the oxide	10.95	10.95
- Weight of Uranium per assembly (kg)	208 (1)	201 (1)

(1) The uranium weight is calculated based on the density of the oxide and the volume. It is slightly higher than anticipated, which is conservative for safety.

2. CALCULATIONS OF Keff OF A PACKAGING IN WATER

As usual two steps are required :

- Study of the unit cell with the APOLLO program [31]

- Calculation of Keff of the packaging with the MORET program [43] .

2.1. Study of the unit cell with the APOLLO program

This is a cylindrical cell of infinite height and reactivity equivalent to that of the fuel pin in the assembly. It consists of four coaxial regions, each having a different chemical composition whose characteristics are given in Table I.

The APOLLO program calculates a detailed flux distribution in the cell of the infinite array, balances the effective cross sections of the regions with this flux and establishes the average multigroup effective cross sections, valid for the cell assembly by utilizing the division into energy groups recommended by HANSEN and ROACH.

For each type of cell, the program calculates K_∞ and B_m^2 which permits calculating Keff of the assembly immersed in water by writing :

$$Keff = \frac{K_\infty}{1 + M^2 B_g^2} \quad \text{with } M^2 = \frac{K_\infty - 1}{B_m^2}$$

The results are given in the following table and show that the "B" and "B_1" assemblies have essentially the same reactivity.

Type of Assembly	"B"	"B_1"
K_∞	1.3469	1.3419
B_m^2 (cm^{-2})	0.0089268	0.0087036
B^2_g (cm^{-2})	0.03129	0.03159
Keff	0.6079	0.5989

TABLE I

Region	Characteristics of the Regions	Type of assembly	
		"B"	"B_1"
UO_2	Radius (cm)	0.618	0.528
	Number of atoms (in 10^{24} atoms/cm^3)		
	U235	0.0006555	0.0006555
	U238	0.0237784	0.0237784
	Oxygen	0.0488678	0.0488678
Air	Radius (cm)	0.6335	0.54
	Number of atoms (in 10^{24} atoms/cm^3)		
	Oxygen	0.000012	0.000012
	Nitrogen	0.000042	0.000042
Zirconium	Radius (cm)	0.715	0.626
	Number of atoms (in 10^{24} atoms/cm^3)		
	Zr	0.042918	0.042918
Water	Radius (cm)	1.057 (1)	0.924 (2)
	Number of molecules (in 10^{24} atoms/cm^3)		
	Water	0.033461	0.033461

(1) The area of the cell is : $S = 1.874^2$ cm^2 and the radius : $R = \sqrt{\frac{S}{\pi}} = 1.057$ cm

(2) To calculate the radius one redistributes the water of the complete free volume of the assemblies around the 63 pins. The area of the cell is :

$S = \frac{(1.625 \times 8)^2}{63}$ cm^2 and the radius $R = \sqrt{\frac{S}{\pi}} = 0.924$ cm.

2.2. Calculation of Keff with the MORET program

The calculation has been performed for a "B" assembly since both types have nearly the same Keff, one chose the one having the largest cross section. The assembly is reduced to a parallelepiped of a homogeneous mixture having an area of 13.118 x 13.118 cm^2 and an infinite height to which one applies the transport cross sections calculated by APOLLO. One describes the packaging without any approximation by assuming a lateral water reflector (see Fig. 7.D.1).

The transport cross sections of the structural materials are calculated by the MORET program, using as input for each the density and the number of atoms (in 10^{24} atoms/cm^3) of the various constituent chemical elements. The transport cross sections are those of HANSEN and ROACH. The characteristics of the different materials are given in Table II of Annex C.

After following 6,160 neutrons, one obtains :

$$Keff = 0.91 \pm 0.02 \text{ (95\% confidence)}$$

Note : Whether the assemblies are equipped with their removable Zr4 shroud or whether they are located in individual stainless steel capsules, it is evident that the reactivity of the packaging will decrease.

3. SAFETY OF AN ISOLATED PACKAGING

One can consider that the value of Keff of 0.91 provides a sufficient margin of safety in terms of the regulations.

One has looked in the meantime for a verification of inequality :

$$Keff \leq \frac{K_\infty}{1.16\ K_\infty - 0.16}$$

and calculated the K_∞ of the pin array which is 1.34, The second member of the inequality is therefore :

$$\frac{1.34}{(1.16 \times 1.34) - 0.16} = 0.96 > 0.91$$

The inequality is thus demonstrated.

4. SAFETY OF THE PACKAGING UNDER NORMAL CONDITIONS AND TRANSPORT ACCIDENTS

The shipments are made dry and the packagings remain leaktight. The critical mass of the unmoderated oxide $U(2.65)O_2$ is infinite. Moreover, the borated resin shielding (15 cm thick) decreases the coupling, it is certain that four packagings (accident conditions) or ten packagings (normal conditions) are subcritical [35].

5. CONCLUSION

A shipment of TN9 packages (allowable number : 10) meets the criteria for nuclear safety for fissile class II under the following conditions :

- The packagings conform to drawing TN 9317-03, Rev. H.
- They contain 7 BWR assemblies (type "B" or "B_1" with respectively 49 pins and 63 pins), the maximum enrichment being 2.65 %.
- The shipments are made dry.

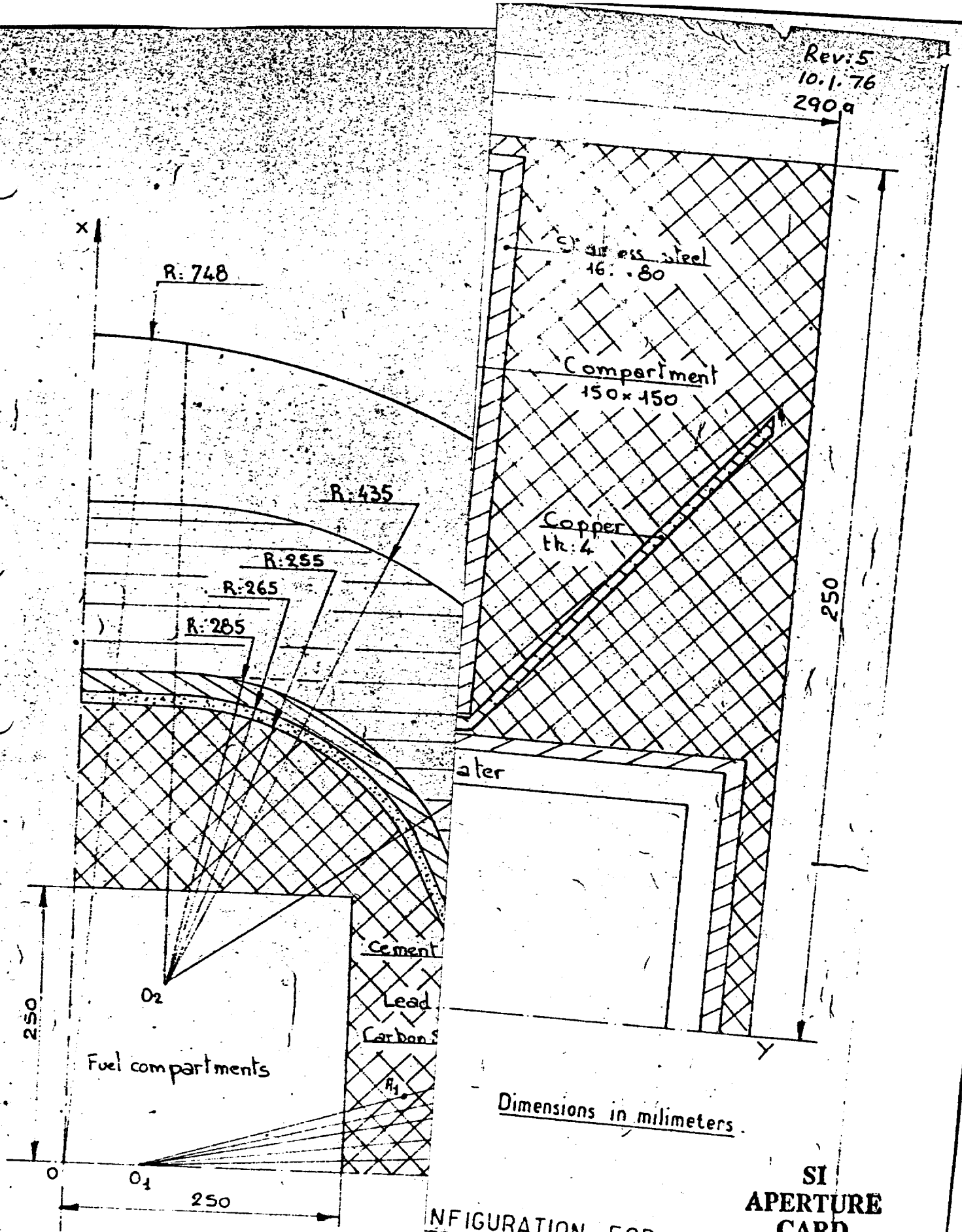

NFIGURATION FOR
CALCULATION

90092-04

ANNEX E TO CHAPTER VII

Criticality Evaluation for Stainless Steel Clad fuel and arrays of LWR fuel rods

1. METHOD OF ANALYSIS

Criticality calculations are performed using modules from the SCALE (Ref. 71) system for standardized computer analyses for licensing evaluation, which was developed by Oak Ridge National Laboratory for the U.S. Nuclear Regulatory Commission. The cross sections used are from the SCALE 27 group ENDF/B Version 4 library. The NITAWL Computer Code corrects the U235 and U238 cross sections for resonance self-shielding using the Nordheim integral method, and the corrected cross sections are then used by the code KENO IV which determines the effective neutron multiplication factor K_{eff} by the Monte Carlo method.

This method of analysis is benchmarked against criticality experiments to demonstrate its applicability to fuel pin arrays reflected by lead and poisoned by boron, as in the TN-8/8L.

2. ASSUMPTIONS USED IN THE CRITICALITY EVALUATION

The same assumptions used in the previous criticality analyses are used for this evaluation:

- The three full compartments each contain one 15 x 15 stainless steel clad fuel assembly.
- The initial enrichment, 4.0 wt % U235 is used, i.e., the effect of burnup in reducing reactivity is not considered.
- The fuel pins retain their nominal pitch during accident condition
- The compartment structure, in particular the location of the boron carbide/copper plates is not altered by accident conditions.
- The efficiency of neutron poisons (steel, copper, boron carbide) does not vary with time.
- The compartments are fully flooded with full density water filling all void spaces around fuel pins, and the package is submerged in water.
- The fuel pins are of infinite length and an infinite number of packages are present.

3. DESCRIPTION OF CALCULATIONAL MODEL

The TN-8/8L is modeled in KENO-IV as three compartments with fuel surrounded by concentric circular cylinders of the various package materials. The outermost layer is 15 cm of water, which is fully reflected, and the entire model is 1000 cm long.

Although the TN-8/8L cross section is not actually circular, the effect of a circular model is negligible as long as the thickness of the material layers corresponds to the actual TN-8/8L. The compartments themselves and their surrounding layers of stainless steel, lead, copper, and boron carbide/copper are modeled exactly except that two compartments are moved 0.04 cm closer to align their full pins with the pins in the third compartment. The fuel pins and guide tubes in each fuel assembly are modeled explicitly.

The material densities for the TN-8/8L are taken from page 280 and the dimensions are from Transnuclear drawing 9317-138. The fuel characteristics shown in Table I.

The model cross section is illustrated in Figure 7.E.1. The NITAWL input, the KENO-IV input, and the KENO-IV output array description showing the arrangement of compartments and fuel pins are presented in Tables II, III and IV at the end of this annex.

4. RESULTS OF THE CRITICALITY EVALUATION

The result of the KENO IV calculation for the 15 x 15 fuel assemblies is:

$$k_{eff} + 2\sigma = 0.9066 + 0.0121 = 0.919$$

For conservatism, this result is scaled upward by the ratio of unity to the lowest benchmark result, yielding:

$$k_{eff} = 0.919 \times (1/0.9916) = 0.927$$

This value is lower than:

$$k_{eff} + 2\sigma = 0.924 + 0.016 = 0.940$$

reported on page 281a for the currently authorized Zr clad PWR fuel assemblies.

The 14 x 14, 4.0 wt % U235 enriched full assemblies and encapsulated/disassembled fuel rod bundle are less reactive, as is demonstrated below in Sections 5 and 6.

5. COMPARISON WITH 14 x 14 STAINLESS CLAD ASSEMBLIES

Examination of the data in Table I for 14 x 14 and 15 x 15 assemblies shows that for the same enrichment, 14 x 14 assemblies contain less total U235 and are undermoderated relative to the 15 x 15 assemblies. Therefore, 4.0 wt % U235 14 x 14 stainless steel clad assemblies are less reactive than the 15 x 15 assemblies analyzed above.

6. COMPARISON WITH FUEL ROD BUNDLES

Similarly, to demonstrate criticality safety for PWR or BWR fuel rods which have been removed from an assembly and arranged in a basket or grid structure, it is sufficient to require that they have less U235 than, and are undermoderated relative to the currently authorized fuel assemblies.

The total U235 based for "P1", assemblies (page 278) is:

3.2 wt% U235 x 469 kgU/assembly = 15.0 kg U235

Undermoderation is ensured by limiting the void volume in the rod bundle which could be flooded by water. This is accomplished by limiting the overall cross section to that of the currently authorized fuel assemblies, 8.5 inches across, and by establishing a lower limit for the cross sectional area of the rods, tubes and structure which would displace water. This lower limit is established using the Westinghouse 17x17 fuel assembly as a basis. Neglecting the cross sectional area of the guide tubes (data from Ref. 72):

$$\text{Area} = (\text{rod diameter}^2\pi/4) \times \text{number of fuel rods}$$
$$= (0.374^2\pi/4) \times 264 = 29.0 \text{ in.}^2$$

Calculating the area in the same way, the Westinghouse 14 x 14, 15 x 15, and 17 x 17 OFA assemblies are found to have areas of 25.0, 28.5, and 26.9 square inches, respectively. Therefore, the 17 x 17 provides a conservative basis. Including the cross sectional area of the guide and instrument tubes, 0.6 in^2, yields the limit for the requested change, 29.6 in^2.

7. KENO IV BENCHMARKS

To verify the method of the foregoing analysis, the same method is used to calculate k_{eff} for known critical (k_{eff} = 1.0) configuration of flooded UO_2 fuel pin arrays which include salient features of the TN-8/8L, in particular boron poisoning and lead reflection. Two experiments are selected from a program by Batelle Pacific Northwest Laboratories (Ref 73 and 74) to simulate conditions associated with both fuel element shipping packages and with fuel storage pools.

The first experiment, Number 32 of Reference 73, determines the critical separation between three subcritical clusters of 2.35 wt % U235 fuel rods with borated stainless steel plates inserted between the clusters. The second experiment, from Reference 74, has no poison plates, but includes lead reflective walls 0.66 cm from either side of 4.29 wt % U235 fuel rod clusters.

As in the TN-8/8L analysis, the 27 group library with NITAWL resonance correction of the U235 and U238 cross sections is used, and all fuel pins, poison plates, and reflector walls are modeled explicitly in KENO IV. The NITAWL and KENO IV input for the second experiment are presented in Tables V and VI at the end of this annex.

8. BENCHMARK RESULTS

For the first experiment, KENO IV determined:

$k_{eff} \pm \sigma$ to be 1.007 ± 0.006

For the second experiment, the result was:

$k_{eff} \pm \sigma = 0.997 \pm 0.005$.

Both results are within 0.3% of the experimental value.

For the sake of conservatism, the results of the TN-8/8L criticality evaluation are scaled up by the factor 1/(0.997-0.005), as indicated in Section 4.

9. CONCLUSION

Based upon the results of the above described analyses, the criticality control of the TN-8/8L packagings containing the proposed contents will be maintained.

FIGURE 7.E.1

TN-8/8L MODEL FOR CRITICALITY EVALUATION

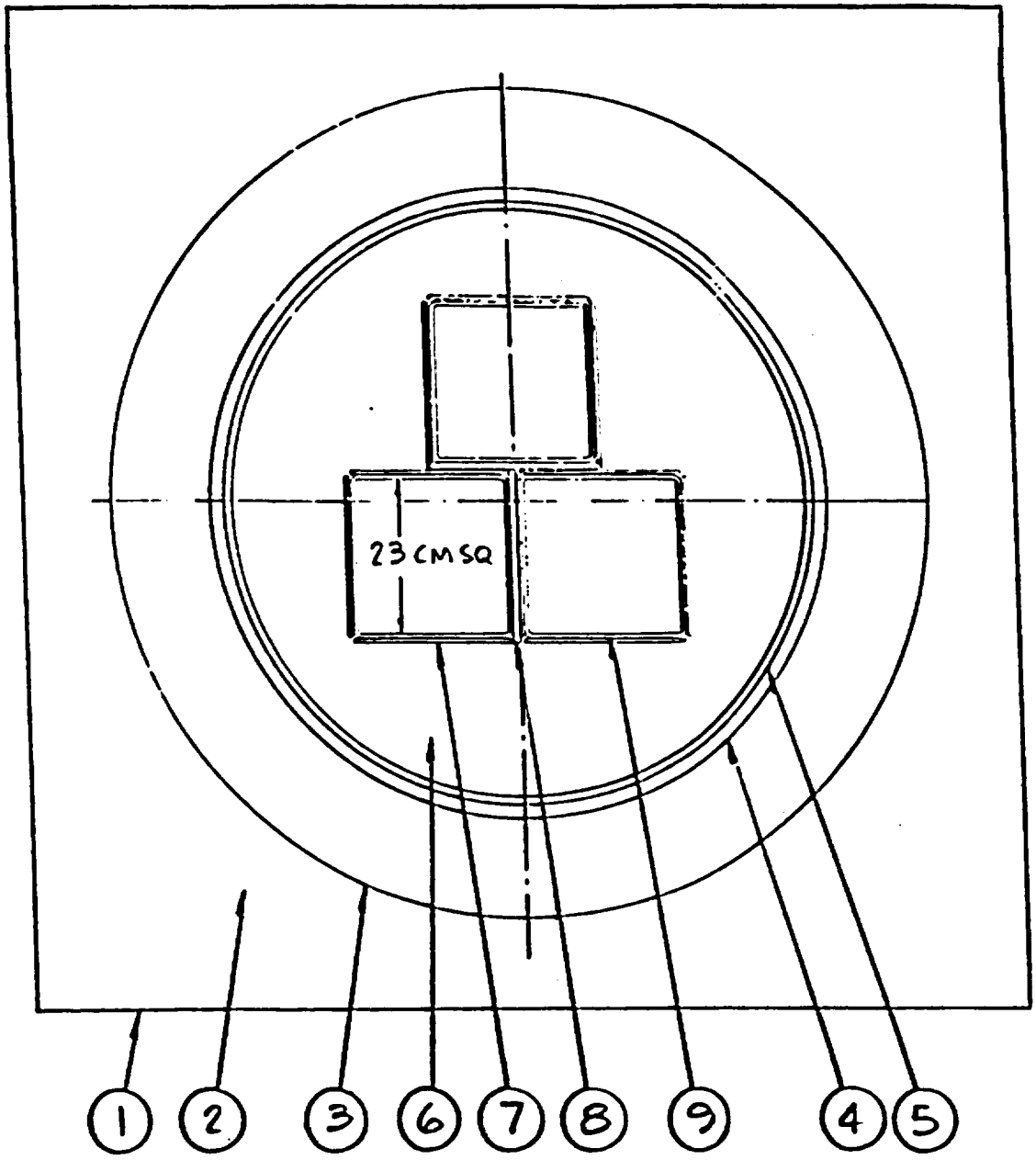

1. Reflection, 4 slides
2. Water, 151.6 cm sq.
3. Homogenized copper/borated resin, 15 cm thick (91. cm O.D.)
4. Stainless steel, 2 cm thick
5. Cement, 1 cm thick
6. Lead, 85.6 cm diameter
7. Boron carbide/copper, 0.5 cm thick
8. Copper, 1.0 cm thick
9. Stainless steel, 0.6 cm thick

TABLE I

Nominal Fresh Fuel
Characteristics of 15 x 15 and 14 x 14 304L
Stainless Steel Clad Fuel Assemblies.

	15 x 15 (a)	14 x 14 (b)
Fuel rod OD, in.	0.4235	0.422
Cladding thickness, in.	0.0165	0.0165
Pellet diameter, in.	0.3835	0.3825
Rod pitch, in.	0.563	0.556
Fuel density, g/cm^3	10.215	10.2-10.3
Length, in.	137.06	137.06
Active Fuel Length, in.	121.75	120.0
No. of fuel rods	204	180
No. of guide and instrument tubes(c)	21	16
Guide tube OD, in.	0.480	Not Avail.
Guide tube wall thickness, in.	0.0135	Not Avail.
Initial U content, kg	422	371
Total Weight, kg	594	501

Notes:

a. Based on Connecticut Yankee fuel data (Ref. 72).

b. Based on San Onofre 1 fuel, (Ref. 72).

c. Guide and instrument tubes are 304L stainless steel.

d. Listed characteristics provide the basis for the criticality analysis.

TABLE II

NITAWL INPUT - 4 WT% U235 SS CLAD, 15 x 15

```
0$$      1     2     3     4    18    19     9    15    20
1$$      0    15     0     0     2     3    15     2    41     0    -1     1  T
2$$       92238      92235       8016       1001      13027
       5011       5010       6012      24304
      26304      28304      25055      14028      29000
      82000
3**
      92238  2.9460E+02    2  4.8705E-01  2.0872E-01
   6.6763E+01  2.1873E-02    1
   1.6000E+01  7.7123E+00    1
   2.3500E+02  4.0089E-01    1
   1.0
      92235  2.9460E+02    2  4.8705E-01  2.0872E-01
   1.5321E+03  9.2299E-04    1
   1.6000E+01  1.8276E+02    1
   2.3800E+02  2.2513E+02    1
   1.0
4**    F 294.6
   T
```

TABLE III

KENO IV INPUT WITHOUT MIXED BOX ORIENTATION

```
TN8L.CONN YANK 15X15.SS CLAD.4%.27G EXPL.PROJ 2001
 3.0 55 300 3 27 27 15 10 31 131 75 41 47 1 -15 1 0 2000 10*0
4*-1 0 0
1 92238 2.187-2  1 -92235 9.230-4  1 8016 4.559-2
2 24304 1.74-2  2 25055 1.73-3  2 26304 5.88-2  2 28304 8.11-3
3 26304 6.097-2  3 24304 1.636-2  3 28304 8.041-3
4 29000 1.883-2  4 5010 1.081-2  4 5011 4.322-2
4 6012 1.338-2  4 82000 9.890-4
5 82000 3.299-2
6 13027 3.853-3  6 8016 2.382-2  6 26304 1.136-3
6 14028 3.853-3  6 1001 2.462-2
7 29000 8.415-3  7 6012 3.525-2  7 1001 5.966-2
7 8016 3.094-3  7 5010 6.800-3  7 5011 2.720-4
8 29000 8.420-2
9 1001 6.686-2  9 8016 3.343-2
10 1001 1.0-10
BOX TYPE  1
CYLINDER  1   0.487  1000  0  27*0.5
CYLINDER  10  0.496  1000  0  27*0.5
CYLINDER  2   0.538  1000  0  27*0.5
CUBOID   9   0.715 -0.715 0.715 -0.715 1000 0 27*0.5
BOX TYPE  2
CYLINDER  9   0.610  1000  0  27*0.5
CYLINDER  2   0.644  1000  0  27*0.5
CUBOID   9   0.715 -0.715 0.715 -0.715 1000 0 27*0.5
BOX TYPE  3
CUBOID  9   1.43   0  0.775  0  1000  0  27*0.5
BOX TYPE  4
CUBOID  9   0.775  0  1.43   0  1000  0  27*0.5
BOX TYPE  5
CUBOID  9   0.775  0  0.775  0  1000  0  27*0.5
BOX TYPE  6
CUBOID  3   1.43   0  0.6    0  1000  0  27*0.5
BOX TYPE  7
CUBOID  3   0.6    0  1.43   0  1000  0  27*0.5
BOX TYPE  8
CUBOID  3   0.6    0  0.6    0  1000  0  27*0.5
BOX TYPE  9
CUBOID  5   1.43   0  0.1    0  1000  0  27*0.5
BOX TYPE  10
CUBOID  5   0.1    0  1.43   0  1000  0  27*0.5
BOX TYPE  11
CUBOID  5   0.1    0  0.1    0  1000  0  27*0.5
BOX TYPE  12
CUBOID  4   1.43   0  0.5    0  1000  0  27*0.5
BOX TYPE  13
CUBOID  4   0.5    0  1.43   0  1000  0  27*0.5
BOX TYPE  14
CUBOID  8   1.43   0  1.0    0  1000  0  27*0.5
BOX TYPE  15
```

TABLE III

KENO IV INPUT WITHOUT MIXED BOX ORIENTATION

```
CUBOID  5   0.055  0  0.5    0  1000  0  27*0.5
CUBOID  4   1.43   0  0.5    0  1000  0  27*0.5
BOX TYPE  16
CUBOID  5   0.885  0  0.6    0  1000  0  27*0.5
CUBOID  4   1.385  0  0.6    0  1000  0  27*0.5
CUBOID  5   1.43   0  0.6    0  1000. 0. 27*0.5
BOX TYPE  17
CUBOID  5   0.055  0  0.6    0  1000  0  27*0.5
CUBOID  3   1.43   0  0.6    0  1000  0  27*0.5
BOX TYPE  18
CUBOID  5   0.885  0  0.775  0  1000  0  27*0.5
CUBOID  4   1.385  0  0.775  0  1000  0  27*0.5
CUBOID  5   1.43   0  0.775  0  1000. 0. 27*0.5
BOX TYPE  19
CUBOID  5   0.055  0  0.775  0  1000  0  27*0.5
CUBOID  3   0.655  0  0.775  0  1000  0  27*0.5
CUBOID  9   1.43   0  0.775  0  1000. 0. 27*0.5
BOX TYPE  20
CUBOID  5   0.885  0  1.43   0  1000  0  27*0.5
CUBOID  4   1.385  0  1.43   0  1000  0  27*0.5
CUBOID  5   1.43   0  1.43   0  1000. 0. 27*0.5
BOX TYPE  21
CUBOID  5   0.055  0  1.43   0  1000  0  27*0.5
CUBOID  3   0.655  0  1.43   0  1000  0  27*0.5
CUBOID  9   1.43   0  1.43   0  1000. 0. 27*0.5
BOX TYPE  22
CUBOID  4   1.375  0  0.5    0  1000  0  27*0.5
CUBOID  5   1.43   0  0.5    0  1000  0  27*0.5
BOX TYPE  23
CUBOID  5   0.045  0  0.6    0  1000  0  27*0.5
CUBOID  4   0.545  0  0.6    0  1000  0  27*0.5
CUBOID  5   1.43   0  0.6    0  1000. 0. 27*0.5
BOX TYPE  24
CUBOID  3   1.375  0  0.6    0  1000  0  27*0.5
CUBOID  5   1.43   0  0.6    0  1000  0  27*0.5
BOX TYPE  25
CUBOID  5   0.045  0  0.775  0  1000  0  27*0.5
CUBOID  4   0.545  0  0.775  0  1000  0  27*0.5
CUBOID  5   1.43   0  0.775  0  1000. 0. 27*0.5
BOX TYPE  26
CUBOID  9   0.775  0  0.775  0  1000  0  27*0.5
CUBOID  3   1.375  0  0.775  0  1000  0  27*0.5
CUBOID  5   1.43   0  0.775  0  1000. 0. 27*0.5
BOX TYPE  27
CUBOID  5   0.045  0  1.43   0  1000  0  27*0.5
CUBOID  4   0.545  0  1.43   0  1000  0  27*0.5
CUBOID  5   1.43   0  1.43   0  1000. 0. 27*0.5
BOX TYPE  28
CUBOID  9   0.775  0  1.43   0  1000  0  27*0.5
CUBOID  3   1.375  0  1.43   0  1000  0  27*0.5
```

TABLE III

KENO IV INPUT WITHOUT MIXED BOX ORIENTATION

```
CUBOID  5   1.43   0  1.43   0  1000. 0. 27*0.5
BOX TYPE  29
CUBOID  5   1.375  0  0.1    0  1000  0  27*0.5
CUBOID  8   1.43   0  0.1    0  1000  0  27*0.5
BOX TYPE  30
CUBOID  8   0.945  0  0.1    0  1000  0  27*0.5
CUBOID  5   1.43   0  0.1    0  1000  0  27*0.5
BOX TYPE  31
CUBOID  4   1.375  0  0.5    0  1000  0  27*0.5
CUBOID  8   1.43   0  0.5    0  1000. 0. 27*0.5
BOX TYPE  32
CUBOID  8   0.945  0  0.5    0  1000  0  27*0.5
CUBOID  5   1.43   0  0.5    0  1000. 0. 27*0.5
BOX TYPE  33
CUBOID  5   0.055  0  0.5    0  1000  0  27*0.5
CUBOID  4   1.43   0  0.5    0  1000. 0. 27*0.5
BOX TYPE  34
CUBOID  3   1.375  0  0.6    0  1000  0  27*0.5
CUBOID  8   1.43   0  0.6    0  1000. 0. 27*0.5
BOX TYPE  35
CUBOID  8   0.945  0  0.6    0  1000  0  27*0.5
CUBOID  5   0.985  0  0.6    0  1000  0  27*0.5
CUBOID  4   1.43   0  0.6    0  1000. 0. 27*0.5
BOX TYPE  36
CUBOID  4   0.055  0  0.6    0  1000  0  27*0.5
CUBOID  3   1.43   0  0.6    0  1000. 0. 27*0.5
BOX TYPE  37
CUBOID  9   0.775  0  0.775  0  1000  0  27*0.5
CUBOID  3   1.375  0  0.775  0  1000  0  27*0.5
CUBOID  8   1.43   0  0.775  0  1000. 0. 27*0.5
BOX TYPE  38
CUBOID  8   0.945  0  0.775  0  1000  0  27*0.5
CUBOID  5   0.985  0  0.775  0  1000  0  27*0.5
CUBOID  4   1.43   0  0.775  0  1000. 0. 27*0.5
BOX TYPE  39
CUBOID  4   0.055  0  0.775  0  1000  0  27*0.5
CUBOID  3   0.655  0  0.775  0  1000  0  27*0.5
CUBOID  9   1.43   0  0.775  0  1000. 0. 27*0.5
BOX TYPE  40
CUBOID  9   0.775  0  1.43   0  1000  0  27*0.5
CUBOID  3   1.375  0  1.43   0  1000  0  27*0.5
CUBOID  8   1.43   0  1.43   0  1000. 0. 27*0.5
BOX TYPE  41
CUBOID  8   0.945  0  1.43   0  1000  0  27*0.5
CUBOID  5   0.985  0  1.43   0  1000  0  27*0.5
CUBOID  4   1.43   0  1.43   0  1000. 0. 27*0.5
BOX TYPE  42
CUBOID  4   0.055  0  1.43   0  1000  0  27*0.5
CUBOID  3   0.655  0  1.43   0  1000  0  27*0.5
CUBOID  9   1.43   0  1.43   0  1000. 0. 27*0.5
```

TABLE III

KENO IV INPUT WITHOUT MIXED BOX ORIENTATION

```
BOX TYPE 43
CUBOID 5  0.775  0  0.1   0  1000  0  27*0.5
BOX TYPE 44
CUBOID 5  0.6    0  0.1   0  1000  0  27*0.5
BOX TYPE 45
CUBOID 5  0.5    0  0.1   0  1000  0  27*0.5
BOX TYPE 46
CUBOID 5  1.43   0  1.0   0  1000  0  27*0.5
BOX TYPE 47
CUBOID 5  0.775  0  1.0   0  1000  0  27*0.5
BOX TYPE 48
CUBOID 5  0.6    0  1.0   0  1000  0  27*0.5
BOX TYPE 49
CUBOID 5  0.1    0  1.0   0  1000  0  27*0.5
BOX TYPE 50
CUBOID 5  0.5    0  1.0   0  1000  0  27*0.5
BOX TYPE 51
CUBOID 5  1.43   0  0.6   0  1000  0  27*0.5
BOX TYPE 52
CUBOID 5  0.775  0  0.6   0  1000  0  27*0.5
BOX TYPE 53
CUBOID 5  0.6    0  0.6   0  1000  0  27*0.5
BOX TYPE 54
CUBOID 5  0.1    0  0.6   0  1000  0  27*0.5
BOX TYPE 55
CUBOID 5  0.5    0  0.6   0  1000  0  27*0.5
BOX TYPE 56
CUBOID 5  1.43   0  0.775 0  1000  0  27*0.5
BOX TYPE 57
CUBOID 5  0.775  0  0.775 0  1000  0  27*0.5
BOX TYPE 58
CUBOID 5  0.6    0  0.775 0  1000  0  27*0.5
BOX TYPE 59
CUBOID 5  0.1    0  0.775 0  1000  0  27*0.5
BOX TYPE 60
CUBOID 5  0.5    0  0.775 0  1000  0  27*0.5
BOX TYPE 61
CUBOID 5  1.43   0  1.43  0  1000  0  27*0.5
BOX TYPE 62
CUBOID 5  0.775  0  1.43  0  1000  0  27*0.5
BOX TYPE 63
CUBOID 5  0.6    0  1.43  0  1000  0  27*0.5
BOX TYPE 64
CUBOID 5  0.5    0  1.43  0  1000  0  27*0.5
BOX TYPE 65
CUBOID 5  1.43   0  0.5   0  1000  0  27*0.5
BOX TYPE 66
CUBOID 5  0.775  0  0.5   0  1000  0  27*0.5
BOX TYPE 67
CUBOID 5  0.6    0  0.5   0  1000  0  27*0.5
```

TABLE III

KENO IV INPUT WITHOUT MIXED BOX ORIENTATION

```
BOX TYPE 68
CUBOID 5  0.1    0  0.5    0  1000  0  27*0.5
BOX TYPE 69
CUBOID 5  0.5    0  0.5    0  1000  0  27*0.5
BOX TYPE 70
CUBOID 4  0.6    0  0.5    0  1000  0  27*0.5
BOX TYPE 71
CUBOID 4  0.775  0  0.5    0  1000  0  27*0.5
BOX TYPE 72
CUBOID 4  0.5    0  0.6    0  1000  0  27*0.5
BOX TYPE 73
CUBOID 4  0.5    0  0.775  0  1000  0  27*0.5
BOX TYPE 74
CUBOID 3  0.775  0  0.6    0  1000  0  27*0.5
BOX TYPE 75
CUBOID 3  0.6    0  0.775  0  1000  0  27*0.5
CORE BDY  0  25.57 -25.57 30.0 -21.4 1000 0 27*0.5
CYLINDER  5 42.8 1000. 0. 27*0.5
CYLINDER  6 43.8 1000. 0. 27*0.5
CYLINDER  3 45.8 1000. 0. 27*0.5
CYLINDER  7 60.8 1000. 0. 27*0.5
CUBOID  9 75.8 -75.8 75.8 -75.8 1000. 0. 27*0.5
```

TABLE IV

KENO IV OUTPUT - ARRAY DESCRIPTION

ARRAY DESCRIPTION

-Z = 1

0	69	68	67	66	65	65	65	65	65	65	65	65	15	12	12	12	12	12	12	12	12	12	12	12	12	12	12	12	12	22	65	65	65	65	65	65	65	65	66	67	68	69
0	45	11	44	43	9	9	9	9	9	9	9	9	9	9	9	9	9	9	9	9	9	9	9	9	9	9	9	9	9	9	9	9	9	9	9	9	9	9	43	44	11	45
0	55	54	53	52	51	51	51	51	51	51	51	16	17	6	6	6	6	6	6	6	6	6	6	6	6	6	6	6	6	24	23	51	51	51	51	51	51	51	52	53	54	55
0	60	59	58	57	56	56	56	56	56	56	56	18	19	3	3	3	3	3	3	3	3	3	3	3	3	3	3	3	3	26	25	56	56	56	56	56	56	56	57	58	59	60
0	64	10	63	62	61	61	61	61	61	61	61	20	21	1	1	1	1	1	1	1	1	1	1	1	1	1	1	1	1	28	27	61	61	61	61	61	61	61	62	63	10	64
0	64	10	63	62	61	61	61	61	61	61	61	20	21	1	1	1	1	1	1	1	1	1	1	1	1	1	1	1	1	28	27	61	61	61	61	61	61	61	62	63	10	64
0	64	10	63	62	61	61	61	61	61	61	61	20	21	1	1	2	1	1	2	1	1	1	2	1	1	2	1	1	1	28	27	61	61	61	61	61	61	61	62	63	10	64
0	64	10	63	62	61	61	61	61	61	61	61	20	21	1	1	1	1	1	1	1	2	1	1	1	1	1	1	1	1	28	27	61	61	61	61	61	61	61	62	63	10	64
0	64	10	63	62	61	61	61	61	61	61	61	20	21	1	1	1	1	2	1	1	1	1	1	2	1	1	1	1	1	28	27	61	61	61	61	61	61	61	62	63	10	64
0	64	10	63	62	61	61	61	61	61	61	61	20	21	1	1	2	1	1	1	1	1	1	1	1	1	2	1	1	1	28	27	61	61	61	61	61	61	61	62	63	10	64
0	64	10	63	62	61	61	61	61	61	61	61	20	21	1	1	1	1	1	1	1	1	1	1	1	1	1	1	1	1	28	27	61	61	61	61	61	61	61	62	63	10	64
0	64	10	63	62	61	61	61	61	61	61	61	20	21	1	1	1	2	1	1	1	1	2	1	1	2	1	1	1	1	28	27	61	61	61	61	61	61	61	62	63	10	64
0	64	10	63	62	61	61	61	61	61	61	61	20	21	1	1	1	1	1	1	1	1	1	1	1	1	1	1	1	1	28	27	61	61	61	61	61	61	61	62	63	10	64
0	64	10	63	62	61	61	61	61	61	61	61	20	21	1	1	1	2	1	1	2	1	1	1	1	1	1	1	1	1	28	27	61	61	61	61	61	61	61	62	63	10	64
0	64	10	63	62	61	61	61	61	61	61	61	20	21	1	1	1	1	1	1	1	1	1	1	1	1	1	1	1	1	20	27	61	61	61	61	61	61	61	62	63	10	64
0	64	10	63	62	61	61	61	61	61	61	61	20	21	1	1	1	1	1	1	1	1	1	1	1	1	2	1	1	1	20	27	61	61	61	61	61	61	61	62	63	10	64
0	64	10	63	62	61	61	61	61	61	61	61	20	21	1	1	2	1	1	1	1	1	1	1	1	1	1	1	1	1	28	27	61	61	61	61	61	61	61	62	63	10	64
0	64	10	63	62	61	61	61	61	61	61	61	20	21	1	1	1	1	1	1	1	1	1	1	1	1	1	1	1	1	28	27	61	61	61	61	61	61	61	62	63	10	64
0	64	10	63	62	61	61	61	61	61	61	61	20	21	1	1	1	1	1	1	1	2	1	1	1	1	1	1	1	1	28	27	61	61	61	61	61	61	61	62	63	10	64
0	64	10	63	62	61	61	61	61	61	61	61	20	21	1	1	2	1	1	2	1	1	1	2	1	1	2	1	1	1	29	27	61	61	61	61	61	61	61	62	63	10	64
0	64	10	63	62	61	61	61	61	61	61	61	20	21	1	1	1	1	1	1	1	1	1	1	1	1	1	1	1	1	29	27	61	61	61	61	61	61	61	62	63	10	64
0	64	10	63	62	61	61	61	61	61	61	61	20	21	1	1	1	1	1	1	1	1	1	1	1	1	1	1	1	1	28	27	61	61	61	61	61	61	61	62	63	10	64
0	60	59	58	57	56	56	56	56	56	56	56	18	19	3	3	3	3	3	3	3	3	3	3	3	3	3	3	3	3	20	25	56	56	56	56	56	56	56	57	58	59	60
0	55	54	53	52	51	51	51	51	51	51	51	16	17	6	6	6	6	6	6	6	6	6	6	6	6	6	6	6	6	24	23	51	51	51	51	51	51	51	52	53	54	55
0	45	11	44	43	9	9	9	9	9	9	9	9	9	9	9	9	9	9	9	9	9	9	9	9	9	9	9	9	9	9	9	9	9	9	9	9	9	9	43	44	11	45
0	50	49	48	47	46	46	46	46	46	46	46	14	14	14	14	14	14	14	14	14	14	14	14	14	14	14	14	14	14	14	14	46	46	46	46	46	46	46	47	48	49	50
0	45	11	44	43	9	9	9	9	9	9	9	9	9	9	9	9	9	9	29	30	9	9	9	9	9	9	9	9	9	9	9	9	9	9	9	9	9	9	43	44	11	45
0	69	68	70	71	12	12	12	12	12	12	12	12	12	12	12	12	12	12	31	32	33	12	12	12	12	12	12	12	12	12	12	12	12	12	12	12	12	12	71	70	68	69
0	45	11	44	43	9	9	9	9	9	9	9	9	9	9	9	9	9	9	29	30	9	9	9	9	9	9	9	9	9	9	9	9	9	9	9	9	9	9	43	44	11	45
0	72	54	8	74	6	6	6	6	6	6	6	6	6	6	6	6	6	6	34	35	36	6	6	6	6	6	6	6	6	6	6	6	6	6	6	6	6	6	74	8	54	72
0	73	59	75	5	3	3	3	3	3	3	3	3	3	3	3	3	3	3	37	38	39	3	3	3	3	3	3	3	3	3	3	3	3	3	3	3	3	3	5	75	59	73
0	13	10	7	4	1	1	1	1	1	1	1	1	1	1	1	1	1	1	40	41	42	1	1	1	1	1	1	1	1	1	1	1	1	1	1	1	1	1	4	7	10	13
0	13	10	7	4	1	1	1	1	1	1	1	1	1	1	1	1	1	1	40	41	42	1	1	1	1	1	1	1	1	1	1	1	1	1	1	1	1	1	4	7	10	13
0	13	10	7	4	1	1	2	1	1	2	1	1	1	2	1	1	2	1	40	41	42	1	1	2	1	1	2	1	1	1	2	1	1	2	1	1	1	1	4	7	10	13
0	13	10	7	4	1	1	1	1	1	1	1	2	1	1	1	1	1	1	40	41	42	1	1	1	1	1	1	1	1	2	1	1	1	1	1	1	1	1	4	7	10	13
0	13	10	7	4	1	1	1	1	2	1	1	1	1	1	2	1	1	1	40	41	42	1	1	1	1	2	1	1	1	1	1	1	1	1	1	1	1	1	4	7	10	13
0	13	10	7	4	1	1	2	1	1	1	1	1	1	1	1	1	2	1	1	40	41	42	1	1	2	1	1	1	1	1	1	1	1	1	1	1	1	1	4	7	10	13
0	13	10	7	4	1	1	1	1	1	1	1	1	1	1	1	1	1	1	40	41	42	1	1	1	1	1	1	1	1	1	1	1	1	1	1	1	1	1	4	7	10	13
0	13	10	7	4	1	1	1	2	1	1	1	2	1	1	1	1	2	1	1	40	41	42	1	1	1	2	1	1	1	2	1	1	1	2	1	1	1	1	4	7	10	13
0	13	10	7	4	1	1	1	1	1	1	1	1	1	1	1	1	1	1	40	41	42	1	1	1	1	1	1	1	1	1	1	1	1	1	1	1	1	1	4	7	10	13
0	13	10	7	4	1	1	2	1	1	1	1	1	1	1	1	1	2	1	1	40	41	42	1	1	2	1	1	1	1	1	1	1	1	1	1	1	1	1	4	7	10	13
0	13	10	7	4	1	1	1	1	2	1	1	1	1	1	2	1	1	1	40	41	42	1	1	1	1	2	1	1	1	1	1	2	1	1	1	1	1	1	4	7	10	13
0	13	10	7	4	1	1	1	1	1	1	1	2	1	1	1	1	1	1	40	41	42	1	1	1	1	1	1	1	1	2	1	1	1	1	1	1	1	1	4	7	10	13
0	13	10	7	4	1	1	2	1	1	2	1	1	1	2	1	1	2	1	40	41	42	1	1	2	1	1	2	1	1	1	2	1	1	2	1	1	1	1	4	7	10	13
0	13	10	7	4	1	1	1	1	1	1	1	1	1	1	1	1	1	1	40	41	42	1	1	1	1	1	1	1	1	1	1	1	1	1	1	1	1	1	4	7	10	13
0	13	10	7	4	1	1	1	1	1	1	1	1	1	1	1	1	1	1	40	41	42	1	1	1	1	1	1	1	1	1	1	1	1	1	1	1	1	1	4	7	10	13
0	73	59	75	5	3	3	3	3	3	3	3	3	3	3	3	3	3	3	37	38	39	3	3	3	3	3	3	3	3	3	3	3	3	3	3	3	3	3	5	75	59	73
0	72	54	8	74	6	6	6	6	6	6	6	6	6	6	6	6	6	6	34	35	36	6	6	6	6	6	6	6	6	6	6	6	6	6	6	6	6	6	74	8	54	72
0	45	11	44	43	9	9	9	9	9	9	9	9	9	9	9	9	9	9	29	30	9	9	9	9	9	9	9	9	9	9	9	9	9	9	9	9	9	9	43	44	11	45
0	69	68	70	71	12	12	12	12	12	12	12	12	12	12	12	12	12	12	31	32	33	12	12	12	12	12	12	12	12	12	12	12	12	12	12	12	12	12	71	70	68	69

TABLE V

NITAWL INPUT - BENCHMARK, LEAD REFLECTOR

```
0$$      1     2     3     4    18    19     9    15    20
1$$      0    10     0     0     2     3    15     2    41     0    -1     1  T
2$$       92238      92235       8016       1001      13027
     26000      82000     12000     29000     24000
3**
     92238  2.9460E+02     2  6.3246E-01  3.0487E-02
  5.4205E+01  2.2183E-02     1
  1.6000E+01  7.7358E+00     1
  2.3500E+02  4.3115E-01     1
  1.0
     92235  2.9460E+02     2  6.3246E-01  3.0487E-02
  1.1770E+03  1.0068E-03     1
  1.6000E+01  1.7044E+02     1
  2.3800E+02  2.0931E+02     1
  1.0
4**   F 294.6
  T
```

TABLE VI

KENO IV INPUT - BENCHMARK, LEAD REFLECTOR

```
BENCHMARK 4.29 U235 PB REFL, NUREG/CR-0796, CALC 2001-2
**PB REFL 6.6 MM FROM 3-8X13 ARRAYS, CRIT SEP = 207.8 MM
 3.0 55 300 3 27 27 10 6 12 10 2 41 8 1 -10 0 0 2000 10*0
1 92238 2.2183-2  1 -92235 1.0068-3  1 8016 4.638-2
2 12000 6.713-4  2 13027 5.957-2  2 24000 6.277-5  2 29000 7.192-5
3 1001 6.686-2  3 8016 3.343-2
4 82000 3.218-2
5 26000 8.487-2
6 1001 1.0-10
BOX TYPE  1
CYLINDER  1   0.6325  91.44  0  27*0.5
CYLINDER  6   0.6414  91.44  0  27*0.5
CYLINDER  2   0.7074  91.44  0  27*0.5
CUBOID   3   1.27  -1.27  1.27  -1.27  91.44  0  27*0.5
BOX TYPE  2
CUBOID   3   20.78  0  2.54  0  91.44  0  27*0.5
CORE BDY   0  70.31  -70.31  10.16  -10.16  91.44  0  27*0.5
CUBOID     3  82.00  -82.00  10.82  -10.82 118.95 -4.45 27*0.5
CUBOID     4  82.00  -82.00  21.02  -21.02 118.95 -4.45 27*0.5
CUBOID     3 150.00 -150.00  90.00  -90.00 157.25 -4.45 27*0.5
CUBOID     5 150.95 -150.95  90.95  -90.95 157.25 -5.40 27*0.5
1  1   13  1   1   8    1   1  1  1  0
1  15  27  1   1   8    1   1  1  1  0
1  29  41  1   1   8    1   1  1  1  0
2  14  28  14  1   8    1   1  1  1  1
END KENO
```

- CHAPTER VIII -

PACKAGING ACCEPTANCE, OPERATIONS AND MAINTENANCE PROGRAMS

This chapter addresses activities related to packaging acceptance, operations and maintenance, which will be performed after fabrication is completed.

The tests and inspections listed under the Acceptance Program shall be performed prior to the first use of a TN-8, TN-8L or TN-9 packaging. Most of the tests will be performed at the Manufacturer's Plant prior to delivery of a packaging.

An Operations Manual will be prepared to provide operations and maintenance procedures for the packagings at typical installations. The Manual will be supplemented by special procedures to meet specific requirements as applicable to different installations for fuel, bundles of fuel rods and irradiated hardware for loading and unloading.

In the present Chapter VIII, we present those aspects of acceptance, operations and maintenance which must be included in the Manuals to assure safe utilization of the packagings and in particular, assure compliance with all applicable codes and government regulations.

1. ACCEPTANCE PROGRAM

1.1 Review of procurement and fabrication records

This review will concern inspection, test, and nonconformance reports related to procurement and fabrication to assure that the packaging has been fabricated in accordance with the design approved by the Commission and that it is correctly depicted in the as-built drawings.

The review will survey implementation of special fabrication process and inspections in order to ascertain :

- Material conformity with respect to the specifications given in Annex A to Chapter III

- Dimensional conformity of the packaging components. Dimensions should be within tolerances indicated on drawings attached to the present safety analysis report.

- Special process conformity with respect to Annex B to Chapter III. These special proecesses concern :

  . Welding and related qualifieations and inspections
  . Leaktightness test of sealed chambers (cement/lead compartment, lid, flanged plug, extremity drums, shock absorbing covers)
  . Boron contents and positioning of the B4C-Cu plates
  . Lead casting and related inspections (lead density and lead thickness)
  . Neutron shielding inspections

- Conformity to ASME Code, Section III, subsection NE, with the exception of justified deviations.

1.2. <u>Review of records concerning development tests in connection with the maintenance program</u>

These tests concern :

- reliability of the quick connection in normal and accidental conditions of transport,

- reliability of gaskets and mounting practice in normal and accidental conditions of transport.

1.3. Visual inspection

All surfaces will be inspected for absence of grease or dirt, as required, and cleaned as deemed necessary.

The finish of accessible internal and external surfaces will be checked for conformity to the design specifications. Any non conformity will be repaired as deemed necessary.

1.4. Acceptance testing

1.4.1. Handling attachment testing

See Annex A to Chapter VIII.

Note that trunnions are tested for both their handling and tie-down functions.

1.4.2. Hydraulic test

See Annex B to Chapter VIII.

1.4.3. Leakage test for containment system fabrication verification

See Annex C to Chapter VIII.

1.4.4. Leakage test for lid gasket interspace

See Annex D to Chapter VIII.

1.4.5. Thermal testing

See Annex E to Chapter VIII.

1.5 Regulatory marking inspection

At the completion of the acceptance program, the packaging will be marked. This marking shall be deemed acceptable when all the information listed in Chapter II, § 2.6, is durably and conspicuously marked in letters and numerals that are at least one-half inch high.

2. OPERATIONS

2.1 Transport

The TN-8, TN-8L and TN-9 packagings may be transported by road, rail and ship, with special semi-trailers or transport chassis.

During transport, the cask is in a horizontal position secured and supported by front and rear trunnions as shown on Fig. 3.B.4 a) and b) (Annex B to Chapter III). The rear trunnions provide a fixed support and the front trunnion supports are designed to provide allowances for thermal expansion. Alternatively, it may be supported as shown on Fig. 3.B.4.c), d) and e).

The semi-trailer is designed for cask rotation around the rear trunnions after removal of the shock absorbing covers. An easily removable trailer enclosure may be used to keep it clean during transport.

2.2 Loading and unloading instructions

The TN-8, TN-8L and TN-9 casks are designed for loading and unloading vertically in a pool and transported in a dry condition. Before unloading in a pool the cask is filled with water, a method which we have used for several years without incident. The casks are also designed for horizontal unloading of irradiated hardware. Draft loading and unloading instructions are given in Annexes F and G to Chapter VIII. The figures related to these draft instructions are given in Annex H.

A reliable procedure for drying the package cavity is given in Annex I. The leakage test for containment assembly verification is given in Annex J.

The Operations Manager will establish detailed procedures including check-lists for recording inspections and controls by utilities or reprocessing plants. He arranges with operators for quick exchange of information and return of completed check-lists and decides necessary actions in agreement with the Quality Assurance Program.

When a type of cask is operated for the first time at a utility or reprocessing plant, a field assistant to the Operations Manager checks that procedures are correctly interpreted and implemented, responsibility clearly delineated as regards the conformity of cask given to the carrier, and documents distributed to concerned people.

The check-list attached to operating procedures will cover the following operations and will specify the dates and operator's name and function.

2.2.1. Receipt of cask

- Documents transmitted by the carrier
- Comments from Consignor
- External condition of cask and vehicle
- Presence of accessories
- Contamination of cask, vehicle and accessories
- Dose rates at surface and 2 meters from cask
- Presence of security seals
- Indications on labels/markings
- Inner pressure and gaseous contamination on arrival
- Abnormal presence of water or contamination
- Easy removal of flanges and lid (normal torque, sufficient grease, etc.)

2.2.2 Preparation of cask

- Presence of adequate axial spacers (when applicable)
- Compliance of containment system parts with design specifications (in particular gaskets and quick connections)
- List of parts replaced by spares

2.2.3 Loading of cask

- Water overpressure across protective skirt
- Duration in the pool
- Loading plan
- Drying (Annex I to Chapter VIII)
- Contamination levels before and after decontamination
- Torque of bolts
- Dose rates at cask surface and 2 meters from the surface
- Leakage test for containment system verification (Annex J to Chapter VIII) for fuel only

2.2.4 Shipment of cask

- Condition of cask and vehicle
- Performance of tie-down
- Dose rates at 2 meters from the vehicle
- Surface temperatures
- Presence of security seals
- Indications on labels/markings
- Documents given to carrier
- Name and function of the consignor certificate signee

3. MAINTENANCE PROGRAM

3.1 Periodic testing, inspections and replacements

3.1.1 Intervals of 1 year or less

a) All the gaskets and quick connections of the cask will be changed, and the leakage test for containment system fabrication verification will be repeated (see Annex C to Chapter VIII).

b) In addition, the leakage test for containment system fabrication will be repeated after the third use of a packaging (see Annex C to Chapter VIII).

3.1.2 Intervals of 2 years or less

The packaging shall be surveyed for possible changes of its Keff, shielding, heat dissipation capability, leaktightness and humidity content of sealed chambers containing balsa wood.

The initial conditions to be used as a reference for the determination of possible changes are obtained by tests according to the same procedure but performed after the first loading with actual fuel assemblies except as noted.

a) Keff verification (For TN8 and TN8L only)

(See Annex K to Chapter VIII). The Keff verification test is applicable for the packaging when used for transport of spent fuel. However the K_{eff} verification test is not applicable for the packaging when used for transport of solid, non-fissile, irradiated hardware.

b) Heat dissipation capabilty verification

See Annex L to Chapter VIII. The thermal performance test is not required at periodic intervals when the maximum decay heat load per package does not exceed 25% of the design heat load.

c) Shielding efficiency verification

(See Annex M to Chapter VIII). The shielding efficiency verification test is applicable for the packaging when used for transport of spent fuel. However, the shielding efficiency verification test is not applicable for the packaging when used for transport of solid, non-fissile, irradiated hardware.

d) Leak tightness verification of the extremity drums and shock absorbing covers

The leaktightness of the extremity drums and shock absorbing covers is initially measured at the manufacturers plant (see Annex B to Chapter II, sections 3.4 and 3.5). These same tests will be repeated to ensure leaktightness on a periodic basis.

e) Humidity contents verification of balsa wood chambers

The humidity content of the extremity drums and shock absorbing covers is initially measured at manufacturer's plant during the thermal test (see Annex E to Chapter VIII).

This verification consists in measuring the dew point of a gas sample for each chamber containing balsa wood. The measured dew point is acceptable if it corresponds to a temperature lower than the minimum surface temperature of the considered chamber. Failure to meet the acceptance criteria will initiate appropriate repair and/or drying of the chamber and repetition of this verification.

3.2 Tests and inspections made at the beginning of each shipping campaign

Prior to the beginning of a new shipping campaign:

- The lid gaskets will be visually checked for good physical condition and greased as needed.
- The contamination levels of the packaging internal surfaces, pipings and orifices will be measured.
- Any items which does not meet requirements will be replaced or repaired.

Rev. 5

10.1.76

297a
297b
297c
297d

Blank Pages

All inspections, repairs or decontamination will be carried out in accordance with approved procedures and documented by reports.

3.3 Tests and inspections made during each cask operation

During each packaging operation, inspections will be made (by checklists) to ensure acceptable conditions of the following components taking into account any minor damage noted by operators and reported on routine checklists:

- the general condition and ease of operation of packaging (lid, flanges, bolts, threads, quick connections, handling lugs, trunnions, flanged plug, shock absorbing covers, orifice covers, impact limiters).

- the external appearance of painting, surface conditions, regulatory markings, fins, resin, extremity drums.

- the gaskets of the orifice covers and flanged plug will be visually checked for good physical conditions and greased as needed.

- the loaded package* will undergo a leakage test for containment assembly verification (Annex J to Chapter VIII). Besides giving an overall check of the package leak tightness this test will provide a conclusive indication that all gaskets arein a satisfactory condition.

- ensure that all 6 trunnion impact limiters are installed and that the 5 impact limiters which include the tapered gussets are on the horizontal trunnions and top redundant trunnion.

- one will visually verify the absence of air bubbles escaping from the packaging sealed chambers and the absence of water dripping out of any surface that may be an indication of an integrity defect.

- contamination levels, fixed and removable, of external surfaces of packaging will be measured.

*Does not apply to loads of irradiated hardware

Any item which does not meet requirements will be replaced or repaired.

All inspections, repairs or decontamination will be carried out in accordance with approved procedures and documented by reports and completed checklists.

- ANNEX A TO CHAPTER VIII -

HANDLING ATTACHMENT TESTING

This test program will verify the structural acceptability of the following attachments :

a) Trunnions

The packaging is provided with 3 pairs of trunnions which are used for its handling and tie-down.

The tests verify their acceptability as regards both functions.

The packaging is handled by the outer segment (diameter : 200 mm) of the trunnions and tied down by the inner segment (diameter : 220 mm).

b) Lid handling lugs

The lid is provided with 4 lugs which are used simultaneously for normal operation. Nevertheless handling by a single lug may occur during maintenance operations.

c) Protective cover handling lugs

Each cover is provided with 2 lugs which are used simultaneously for normal operation.

Nevertheless, handling by a single lug may occur during maintenance operations.

1. TEST SPECIFICATIONS

Prior to a test, inspection records are reviewed to verify the dimensional conformity of the concerned attachment. Test areas and the surrounding surfaces are cleaned to assure that they are free from any dirt which could hide a surface defect.

1.1. Trunnions

a) A force equal to twice the handled weight (weight of packaging without its extremity covers, plus 7,200 daN allowance for contents and accessories) is applied twice in succession for a 15 minute period on each trunnion pair.

This force is applied in the longitudinal direction to the center of the outer segment (diameter : 200 mm) of the trunnions.

b) A force equal to 5 times the weight of the package (packaging weight plus 2,200 daN allowance for contents) is applied twice in succession for a 15 minute period on the bottom trunnion pair. This force is applied in the longitudinal direction to the center of the inner segment (diameter : 220 mm) of the trunnions.

c) A force equal to 2.5 times the weight of the package is applied twice in succession for a 15 minute period on the top trunnion pairs. This force is applied in the longitudinal direction to the center of the inner segment of the trunnions.

The extremity of the trunnions is measured for displacement in regards to a reference point of the packaging body. Measurements are made using a pre-mounted dial indicator with an accuracy of .01 mm.

After each trunnion pair is tested, its immediate area and the packaging area subject to a force reaction will be visually

inspected for damage (i.e. welding cracks, surface deformation, etc.)

Note: All precautions are taken to avoid damage to the trunnion test areas. In particular the width of the force application areas is not less than 50 mm.

1.2 Lid handling lugs

1.2.1 Original Lid

A force equal to the lid weight is applied to each of the lid handling lugs two times in succession for a 15 minute period. The extremity of each lug is measured for displacement in regards to a reference point of the lid surface. Measurements are made using a pre-mounted dial indicator, the accuracy of which is 0.01 mm.

After each lug is tested, the lug and its related area will be visually examined for damage.

1.2.2 Configuration x Lid

The lid lifting lugs shall be load tested in pairs to a load of 2 times the final weight of the lid. Load testing shall be performed in ambient air. Lugs shall be examined by liquid penetrant methods prior to and after load testing of the lugs for linear indications, including cracks.

1.3 Protective covers handling lugs

The test procedure for these lugs is similar to that of the lid handling lugs with the exception that a test force equal to the protective cover weight is applied to each protective cover lug.

2. ACCEPTANCE CRITERIA

The test is deemed satisfactory if the results indicate:

1) No permanent deformation indication obtained between measurements made after the first and the second force application.

2) No physical damage is indicated during the visual inspection made after the test.

3. CORRECTIVE ACTION

If the above acceptance criteria is not satisfied, the failure will be analyzed and repaired as necessary. The test will then be repeated to verify that the repaired section does now meet the acceptance criteria. This action will be repeated until all tests are found satisfactory.

- ANNEX B TO CHAPTER VIII -

HYDRAULIC TEST

This test is performed in conformity with the ASME Code, Section III - Article 6000 except for a deviation from paragraph NE 6121 (exposure of joints) due to the fact that the requirements of the paragraph NE 5211 are not fulfilled.

1. DESIGN CONDITIONS AND MINIMUM TEST PRESSURE

- Design pressure : 7 b (8 b absolute)
- Design temperature : 170°C (338°F)
- Design stress intensity values (Sm) for SA 240 (grade 304 L) according to table I-10-2 :
  . at ambience (100°F) : $Sm = 17.3 \times 10^3$ ksi
  . at 338°F : $Sm = 16.6 \times 10^3$ ksi
- Minimum test pressure (para. NE.6221) :

$$P = 7 \times 1.35 \times \frac{17.3}{16.6} = 9.85 \text{ b (10.85 b absolute)}$$

2. TEST PROCEDURE

This test is performed after pickling and passivation of the stainless steel surfaces. It consists of filling the packaging cavity (approx. 700 liters) with water, venting carefully any gas, pressurizing at 11 b (absolute) with a hydraulic pump and watching pressure variation of the isolated pressurized cavity for 6 hours. The pressure gauge sensitivity is 2 %.

The temperature of tap water introduced into the cavity is measured and that of the cask cavity is recorded throughout the test.

The pressure inside the cement/lead cavity is monitored throughout the test.

3. ACCEPTANCE CRITERIA

The test is considered acceptable if there is no visible leakage at the orifice and the lid closure.

REMARK :

The leakage test for containment system fabrication verification (see Annex C to Chapter VIII) is performed after the hydraulic test to demonstrate that the packaging meets the leaktightness requirements.

4. CORRECTIVE ACTION

Failure to satisfy the acceptance criteria will result in a determination of the leakage, repairs as deemed necessary, and repetition of the test.

- ANNEX C TO CHAPTER VIII -

LEAKAGE TEST FOR CONTAINMENT SYSTEM FABRICATION VERIFICATION

This test is conducted in conformance with Paragraph 6.3 of ANSI N14.5.

The test conditions are as follow:

a) Leak testing of the cavity containment with the quick connections removed to demonstrate leaktightness of the blind flanges at openings "B" and "C" and shield plug "A".

b) Leak testing of the cavity containment with quick connections installed.

Prior to containment system assembly, the flange surfaces and gaskets are inspected to assure compliance with surface and cleanliness requirements.

The flange fixing screws, quick connections and their fittings are torqued to their specified values.

The packaging cavity is evacuated until a vacuum of 10^{-2} torr or less is reached. A liquid nitrogen cold trap is used to condense water which may evaporate from the cavity surfaces.

The volume comprised of the cavity, the cold trap and the vacuum gauge is isolated for a suitable period and the pressure monitored.

The time period and vacuum gauge are selected to achieve a minimum sensitivity of 8.0×10^{-4} atm cm^3/s.

This value is half the permissible leakage rate as calculataed in the Annex C to Chapter III, in conformance with Paragraph 7.2 of ANSI N14.5.

For the test results to be acceptable, the leakage rate shall not exceed 1.6×10^{-3} atm cm^3/s.

If a test reveals a leakage in excess of this rate, the leakage area is determined, repaired as needed and the test repeated. This action is repeated until the test satisfies the acceptance criteria.

- ANNEX D TO CHAPTER VIII -

LEAKAGE TEST FOR LID GASKET INTERSPACE

This test represents an alternative method to that described in the previous ANNEX C for demonstrating that the lid closure meets the regulatory requirements for leaktightness.

Prior to the test, the flange surfaces and gaskets are inspected to assure compliance with surface and cleanliness requirements. The lid bolts are torqued to the specified value.

For this test, the volume of the space between the two lid gaskets is evacuated until a vacuum of 10^{-2} torr or less is reached. A liquid nitrogen cold trap is used to condense water which may evaporate from the gasket interspace surfaces.

The volume comprised of the gasket interspace, cold trap and vacuum gauge is isolated for a suitable period and the pressure monitored.

The time period and vacuum gauge are selected to achieve a minimum sensitivity of 8.0×10^{-4} atm.cm^3/s, considering the volume of the test equipment.

For the test results to be acceptable, the leakage rate shall not exceed 1.6×10^{-3} atm.cm^3/s. If the test does not satisfy this rate, the leakage area is determined, repaired as needed and the test repeated. This action is repeated until the acceptance criteria is satisfied.

/wa
0280W

- ANNEX E TO CHAPTER VIII -

THERMAL TESTING

The purpose of this test is to verify the behavior of the packaging components, to measure the pressure in sealed chambers, the heat dissipation characteristics of the packaging and thermal gradients, and to prepare a typical chart of the temperature variation with time of the inner cavity for the design thermal capacity.

1. TEST PROCEDURE

The cask is supported in a horizontal position upon its trunnions with its lower generatrix two centimeters off the ground in a shop of large dimensions which is as free of air drafts as possible.

The cavity is filled with water. Water tight electrical heaters spread the heat load along the different compartments. Shielded thermocouples indicate water temperature. All electrical and thermocouple penetrations are tight. The cask cavity is pressurized to 7 b (gauge).

Test equipment includes :

- a pressure gauge, a safety valve (setting pressure : 10 b), a water filling valve and a gas venting valve.

Thermocouples are introduced in the 3 wells connected to orifices (F1), (F2) and (F3) and the position of their hot junction checked by length measurement.

During the test, the cask is equipped with its shock absorbing covers (or equivalent thermal insulation) and thermocouples indicate the temperature of cask inaccessible surfaces. A pressure gauge and a valve provisionly installed in replacement of a fusible screw permit the measurement and release of the pressure inside each sealed chamber (lead/cement - extremity drums - shock absorbing covers).

2. TEST DURATION

The intended minimum test duration shall be 30 hours, or until thermal equilibrium is observed (as defined below), whichever period is greater. Assuming even ambient conditions and electrical supply, 30 hours permits the packaging in the area of thermocouples (F1), (F2) and (F3) to reach thermal equilibrium within 2% of error.

In case of an interruption in the electrical supply, the test duration shall be extended until the temperature records indicate thermal equilibrium. Thermal equilibrium will be considered to be reached when the average temperature indicated by the thermocouples in orifices (F1), (F2) and (F3) indicates a plateau (with allowance for ambient conditions and voltage changes).

After test completion, the cavity is drained and the packaging inspected to verify the absence of damage.

3. MEASUREMENT

a) Electrical measurements

- The electric heaters are selected to provide the design heat ouput (within ± 20 % taking into account the voltage uncertainties).

  The electric power is measured with 2 % accuracy.
  Voltage is recorded throughout the test duration.

b) Temperatures

The ambient temperature (measured at a reasonable distance from the tested packaging), water temperature (measured by thermocouple), and the average inner lead temperature indicated by the thermocouples in orifices (F1), (F2), (F3) will be recorded throughout the test duration with an accuracy of ± 1°C.

The surface temperatures will be measured by the means of a thermocouple or a contact pyrometer (accuracy ± 2°C) when thermal equilibrium is reached.

c) Pressure gauges

. Cask cavity : - range : 0 - 10 b
- accuracy : ± 0.2 b

. Other sealed chambers : - range : vacuum - 3 b
- accuracy : ± 0.1 b

4. ACCEPTANCE CRITERIA

The test is considered as successful if :

. The average inner lead temperature (measured by the thermocouples in orifices (F1), (F2), (F3) does not exceed the design one (t_5) after corrections for ambient temperature and power.

. The measured pressure in any sealed chamber does not exceed the design one after corrections for ambient temperature and power.

. Visual inspection shows that the behavior of the packaging is satisfactory.

5. CORRECTIVE ACTIONS

As far as possible the results shall be analyzed before the end of the test in order to decide whether additional measurements are necessary and to correct possible testing errors.

In case the measured average inner lead temperature or the measured pressure in any sealed chamber exceeds the design one, the heat rating of the packaging may be reduced. Any other corrective action requires repetition of the test.

ANNEX F TO CHAPTER VIII
DRAFT LOADING INSTRUCTIONS

This section provides the draft loading instructions for use of the TN-8, TN-8L and TN-9 spent fuel transport packagings. A generic operations manual is available for use with the casks and contains detailed procedures for cask handling, loading, testing, maintenance, and transport operations.

The draft instructions and generic operations manual are used to prepare the specific procedures for the handling, loading, testing, maintenance, and transport of the TN-8, TN-8L and TN-9 packagings for each specific site where the packagings will be used. The specific facility procedures are the responsibility of the site facility handling the packagings and the designated shipper.

The TN-8, TN-8L and TN-9 casks are intended to be loaded in a spent fuel storage pool, drained, dried, dryness tested, backfilled with inert gas and transported dry. For dry loading/unloadings and/or other site specific requirements, some steps may be modified or omitted provided the modification and/or omission do not violate the requirements of the SAR

When the cask is used for the transport of non-fissile materials (irradiated hardware) some of the operational steps of this generic operating procedure may be modified or omitted (e.g., temperature measurements), provided the modifications or omissions do not violate the requirements of the SAR.

NOTE: The Figures referenced are found in Annex H to Chapter VIII. All annexes referenced in these instructions are annexes to Chapter VIII.

PROCEDURE FOR LOADING THE TN-8, TN-8L AND TN-9 PACKAGINGS

1.0 ACCEPTANCE AND OFF-LOADING CASK

1.1 Upon cask arrival on the transport vehicle, slide back the protective enclosure.

1.2 Inquire for special precautions from the driver, from shipping documentation or from shipping facility's reports.

1.3 Perform cask and trailer radiation survey and record data on appropriate forms.

1.4 Inspect the cask and trailer for any damage or other irregularities and the presence of the security seals, and regulatory labels and placards.

1.5 Position trailer under unloading crane and release front and rear cask tie-downs. See Fig. 8.H.1.

1.6 Remove cask shock absorbing covers and impact limiters using overhead crane and 2 legged slings.

1.7 Attach the cask lifting beam to the crane hook and engage the lift beam to the cask front trunnions.

1.8 Rotate the cask from the horizontal to vertical position using the overhead crane.

1.9 Lift the cask from the vehicle to the staging area and attach the bottom protective cover. Remove lift beam and wash cask down, if necessary.

1.10 Install the plastic protective skirt around the finned length of the cask. See Fig. 8.H.2.

1.11 Remove the blind flanges from openings "J1" and "J2" and replace with connectors "J1" and "J2". Open valve V-3 (Figure 8.H.7)

1.12 Remove blind flange from opening "B" and measure the radiation level and check for removable contamination.

1.13 Arrange the Vacuum Drying System (VDS) in the "Vent Mode" (Fig. 8.H.3). Install connector "B" (with gage G-1 installed) in cask opening "B" with valves V-1, V-2 and V-3 closed. Open valve V-2 and measure cavity pressure.

1.14 If cask pressure is below atmospheric, vent cask to atmospheric pressure by opening V-3. If above atmospheric, connect V-3 to gaseous radwaste system before opening V-3 to vent cask to atmospheric pressure.

1.15 Remove blind flange from opening "C" and shield plug from opening "A". Remove the "B" connector and replace the blind flange to orifice "B".

NOTE: Monitor radiation levels and check for removeable contamination.

1.16 Arrange the Cooldown System (CDS) in cask filling/cool-down mode (Figure 8.H.4). Set the clean water pressure regulator to 25 psig with V-10 closed.

1.17 Establish a clean water inlet flow by opening V-9 and V-10.

1.18 Fill the cask cavity until water is observed at the discharge.

1.19 When the cask is full, close valve V-10 and shut off the water supply.

1.20 Lower the water level in the cask to below the shield plug level by draining approximately 1 gallon using the connector "C" as shown in Fig. 8.H.5 and Fig. 8.H.6.

1.21 Drain the fill and vent lines into liquid rad-waste.

1.22 Loosen all lid bolts to hand tight and remove all but four bolts.

1.23 Remove the "A-2" connector from orifice "A" and replace the "A" plug with no screws installed. Remove the "C" connector and replace the blind flange to orifice "C".

1.24 Attach the lifting beam to the cask trunnions and attach the four legged lid lifting sling to the lid lifting lugs on the cask lid. Remove the "D" plug to the lid gasket interspace.

1.25 Lift the cask and transfer to over the pool.

1.26 Attach the clean water supply to connector J1.

NOTE: Spray all external surfaces of the cask, the skirt and the lift beam with demineralized water as they are lowered into the pool.

1.27 Lower the cask into the pool maintaining a skirt water level approximately 6-12 inches above the pool water level. Remove remaining lid bolts as they become accessible.
NOTE: Observe the cask drums as they are submerged for leakage indicated by air bubbles. Check any such indications when the cask is removed the pool by observing for water leakage from the drums.

1.28 When water is observed draining from valve V-3 stop lowering the cask.

1.29 Switch the water supply from direct feed to the skirt fill reservoir and monitor the water level in the reservoir. Close valve V-3. Maintain skirt overpressure at all times cask is submerged to prevent pool water from contaminating the fins. See Fig. 8.H.7.

1.30 Lower the cask to the bottom of the spent fuel pool.

1.31 Release the lift beam from cask and lowly remove the lid.

1.32 Move the lift beam and lid from the cask loading area.

1.33 Install the front face protective cover.

2.0 LOADING

2.1 Load the fuel assemblies, bundles of fuel rods or irradiated hardware into the cask cavity.

2.2 Remove the front face protective cover.

2.3 Replace the lid onto the cask.

2.4 Attach the lift beam to the cask trunnions.

2.5 Raise the cask to the pool surface and verify that the lid is properly installed.
NOTE: Spray the lift beam and all cask surfaces with clean water as the cask is raised.

2.6 Inspect four lid bolts for damage to threads and lubricate. Aspirate the water from four bolt holes and install the bolts hand tight.

2.7 Slowly remove the cask from the pool. Open valve V-3 when it reaches the surface. Stop the inlet flow to the reservoir. Disconnect the fill hose from the reservoir and allow the skirt water to drain the fill hose. Spray all exposed surfaces with clean water to remove particles and water soluble contaminants.
NOTE: Raise the cask slowly enough to maintain the water level in the skirt approximately 18 inches above the pool surface.

2.8 Remove the hose from connector J-1.

2.9 Transfer cask to decontamination area. Wipe dry all wet surfaces as soon as possible using clean, lint-free rags.

3.0 PREPARATION FOR CASK RELEASE

NOTE: Steps denoted by asterisk are not required for irradiated hardware shipments.

3.1 Remove blind flanges "C" and shield plug "A". Attach connector "C" with drain hose and connector "A1" in "Cask Draining Mode" (see Figure 8.H.5).

3.2 Drain approximately 10 gallons from the cask and disconnect connector "C".

3.3 Inspect the remaining twelve lid bolts for thread damage and lubricate.

3.4 Aspirate the water from the twelve bolt holes and install all bolts to hand tight.

3.5 Tighten all bolts to 40 ft-lb. in the sequence shown in Fig. 8.H.8.

3.6 Tighten all bolts to 290 ft-lb in the same sequence. Repeat to verify 290 ft-lb.

3.7 Connect the VDS in the leak test mode to port "D" to verify lid tightness (refer to Annex J, part 2 and Fig. 8.H.9).

3.8 After tightness verification is complete, inspect O-ring gasket on "D" port plug and tighten to 35 ft-lb.

3.9 Remove port plugs "F1", "F2" and "F3" and install thermocouples F1, F2 and F3.

3.10 Drain the cask completely by reconnecting connector "C" (see figure 8.H 5)..

3.11 Remove the drain line from connector "C", install the vacuum tight bottle and arrange the VDS in the vacuum drying mode (See Fig. 8.H.13) and dry the cask internal cavity per instructions of Annex I.

3.12 When the cavity dryness test is complete, remove the VDS connectors from the cask.

3.13 Inspect the bolt threads and the O-ring gasket and the seating surfaces on shield plug "A" and install in cask opening "A". Tighten each bolt to 35 ft-lb.

3.14* Install the test flange "C" on opening "C" and tighten each bolt to 35 ft-lb. (see Figure 8.H.11).

3.15* Leak test openings "A" and "C" (refer to Annex J)

3.16* When the leak tests for openings "A" and "C" are complete, connect the VDS to the coupling at opening B and to an ambient temperature inert gas supply. Put the VDS in the evacuation and backfill mode (Figure 8.H.17) and evacuate the cavity to approx. 40 mbar.

3.17* Backfill the cavity in accordance with the following. Refer to Fig. 8.H.17.
Slowly open valve V-1 and backfill the cask cavity with inert gas (nitrogen, helium, or argon) to a pressure of one atmosphere as read on gage G-1.

3.18* When the final backfill pressure is reached, close valve V-1 and disconnect the "B" connector from opening "B", thereby sealing the cask cavity.

3.19* Rearrange the VDS in the leak testing mode.

3.20* Inspect the bolt threads and the O-ring gasket and seating surfaces on the blind flange for opening "B" and install. Tighten bolts to 35 ft-lb.

3.21* Test the leak tightness of opening "B" (refer to Annex J) using test cover "A-B".

3.22* Verify the total leakage rate for openings "A", "B", "C" and "D" is below the acceptance criteria (refer to Annex J).

3.23 Check for removeable contamination on all exposed cask and skirt surfaces and decontaminate as necessary to reduce to acceptable levels. The cask must be decontaminated to comply with the requirements of 10CFR Paragraph 71.87(i) prior to shipment.

NOTE: If water sprays are used on the front face, remove thermocouples F1, F2 and F3 and install port plugs "F1", "F2" and "F3" and torque to 35 ft-lb.

3.24 Remove the skirt. Check for removeable contamination on all newly exposed cask surfaces and fins. Decontaminate as necessary to assure compliance with 10CFR Part 71.87(i).

3.25* Measure and record cavity temperature from thermocouples F1, F2 and F3.

NOTE: If these were temporarily removed during decontamination of the front face, reinstall.

3.26* Inspect the threads and O-ring of port plugs F1, F2 and F3. Remove the thermocouples and install the plugs in ports "F1", "F2" and "F3" and torque to 35 ft-lb.

3.27 Attach the lift beam to the cask trunnions.

3.28 Lift the cask and remove the bottom protective cover. Check the cask rear face for removeable contamination and decontaminate as required to comply with 10CFR Part 71.87(i) requirements.

3.29 Transfer the cask from the decontamination area to the vehicle area and position over the transport trailer.

3.30 Examine the rear trunnions for damage and lubricate the inner shoulder surface. Lower the cask until the rear trunnions engage the trunnion supports. Rotate the cask from vertical to horizontal position.

3.31 Install front trunnion tie-down binders and lock in place. Install rear trunnion tie-downs and torque bolts to 125 ft. lbs.

3.32 Replace trunnion impact limiters and shock absorbing covers.
NOTE: Inspect all bolt threads and lubricate prior to installation. Tighten impact limiter bolts to 35 ft-lb and cover bolts to 290 ft-lb.

4.0 Preparation For Cask Shipment

4.1 Measure cask surface dose rates and verify they are below regulatory limits.

4.2* Measure cask fin temperature at one location on each side of the cask and record the highest reading.

4.3 Attach security seals to front and rear shock absorbing cover bolt holes.

4.4 Attach appropriate regulatory shipping labels for transport of loaded radioactive materials.

4.5 Perform final cask inspection and dose rate surveys to verify condition is acceptable for shipment.

4.6 Close trailer enclosure.

4.7 Perform final external dose rate surveys.

4.8 Provide the driver with appropriate shipping papers and loading documentation, as required for the specific shipment. Release for transport.

Rev. 9
5/30/85

317
318
318a
318b
318c
318d
318e
318f

Blank pages

ANNEX G TO CHAPTER VIII
DRAFT UNLOADING INSTRUCTIONS

This section provides the draft unloading instructions for use of the TN-8, TN-8L and TN-9 spent fuel transport packagings. A generic operations manual is available for use with the casks and contains detailed procedures for cask handling, loading, testing, maintenance, and transport operations.

The draft instructions and generic operations manual are used to prepare the specific procedures for the handling, unloading, testing, maintenance, and transport of the TN-8, TN-8L and TN-9 packagings for each specific site where the packagings will be used. The specific procedures are the responsibility of the site facility handling the packagings and the designated shipper.

The TN-8, TN-8L and TN-9 casks are intended to be unloaded in a spent fuel storage pool, drained, and backfilled to 1 bar absolute of air or inert gas and transported dry (See Chapter III, Annex C). Depending on the activity and type of contents, the casks may be unloaded in air using specially designed remote handling equipment. Special safety precautions may be necessary depending on specific site limitations and requirements. Such dry unloading operations follow the same instructions provided below except the cask is not filled with water prior to unloading, the fin protective skirt is not filled with water (or is replaced with standard contamination preventative tarpaulin material) and decontamination of cask externals is substantially reduced. Also, the cask may be positioned vertically or horizontally for unloading. In the horizontal position, a transport frame may be used to allow unloading without removal of the cask. Site specific procedures and equipment shall be developed prior to any such dry unloading operations.

When the cask is used for the transport of non-fissile materials (irradiated hardware) some of the operational steps of this generic operating procedure may be modified or omitted (e.g., temperature measurements), provided the modifications or omissions do not violate the requirements of the SAR.

NOTE: The Figures referenced are found in Annex H to Chapter VIII. All annexes referenced are annexes to Chapter VIII.

PROCEDURE FOR UNLOADING THE TN-8, TN-8L AND TN-9 PACKAGINGS

1.0 ACCEPTANCE AND OFF-LOADING CASK

NOTE: Steps denoted by asterisk are not required for irradiated hardware shipments

1.1 Upon cask arrival on the transport vehicle, slide back the protective enclosure.

1.2 Inquire for special precautions from the driver, from shipping documentation or from shipping facility's reports.

1.3 Perform cask and trailer radiation survey and record data on appropriate forms.

1.4 Inspect the cask and trailer for any damage or other irregularities.

1.5 Position trailer under unloading crane and release front and rear cask tie-downs. See Fig. 8.H.1.

1.6 Remove cask shock absorbing covers using overhead crane and 2 legged slings and the impact limiters.

1.7 Attach the cask lift beam to the crane hook and engage the lift beam to the cask front trunnions.

1.8 Rotate the cask from the horizontal to vertical position using the overhead crane.

1.9 Lift the cask from the vehicle to the staging area and attach the bottom protective cover. Remove lift beam and wash cask down, if necessary.

1.10 Remove the blind flanges from openings "J1" and "J2" and replace with connectors "J1" and "J2". Open valve V-3 (Fig. 8.H.7).

1.11 Remove blind flange from opening "B" and measure the radiation level and check for removeable contamination.

1.12* Remove plugs from openings F1, F2 and F3 and install test thermocouples F1, F2 and F3: Measure the cavity temperatures.

1.13 Install connector "B" (with gage G-1 attached) in cask opening "B" with V-1, V-2 and V-3 closed. Open V-2 and measure cavity pressure (Fig. 8.H.3).

1.14 If cask pressure is below atmospheric, vent cask to atmospheric pressure by opening V-3. If above atmospheric, connect V-3 to gaseous radwaste system before opening V-3 to vent cask to atmospheric pressure.

1.15 Remove connector "B" from the cask.

1.16 Deleted.

1.17 Deleted.

1.18 Deleted.

1.19 Remove blind flange from opening "C" and shield plug from opening "A".

NOTE: Monitor radiation levels and check for removeable contamination.

1.20 Install the plastic protective skirt around the finned length of the cask. See Fig. 8.H.2.

1.21 Arrange the Cooldown System (CDS) in cask filling/cooldown mode (Figure 8.H.4). Set the clean water pressure regulator to 25 psig with V-10 closed.

NOTE: The safety relief valve V-8 must be set to limit cavity pressure to no more than 7 atmospheres during the cool-down process.

1.22 Establish a clean water inlet flow by opening V-9 and V-10.

1.23 Fill the cask cavity until water is observed at the discharge.

1.24* When the cask is full, measure and record internal cavity temperature indicated by thermocopules F1, F2, and F3. If the average temperature is below acceptable temperature limits for placing the cask in the pool, proceed with the operations. If above acceptable limits, establish once through or recirculating flow (at site option) and continue flow through the cask until the average temperature is below the acceptable limits. Close valve V-10 and shut off the water supply.

1.25 Lower the water level in the cask to below the shield plug level by draining approximately 1 gallon using the connector "C" as shown in Fig. 8.H.5 and Fig. 8.H.6.

1.26 Drain the fill and vent lines into liquid rad-waste.

1.27 Loosen all lid bolts 1/4 turn sequentially. Repeat for another 1/4 turn then loosen to hand tight and remove all but four bolts.

1.28 Remove the "A-2" connector from orifice "A" and replace the "A" plug with no screws installed. Remove the "C" connector and replace the blind flange to orifice "C" and install and torque bolts. Remove F1, F2 and F3 thermocouples and install thermocouple plugs.
NOTE: Thermocouples not required for irradiated hardware.

1.29 Attach the lifting beam to the cask trunnions and attach the four legged lid lifting sling to the lifting lugs on the cask lid. Remove "D" plug.

1.30 Move the cask from the decontamination stall and transfer over the pool. Attach the clean water supply to connector J1.

1.31 Lower the cask into the pool maintaining a skirt water level approximately 6-12 inches above the pool water level. Remove the remaining lid bolts as they become accessible.
NOTE: Observe the cask drums as they are submerged for leakage indicated by air bubbles. Confirm any such indications when the cask is removed from the pool by observing for water leakage from the drums.

1.32 When water is observed draining from valve V-3, stop lowering cask.

1.33 Monitor the water level in the reservoir. Close valve V-3. Maintain skirt overpressure at all times cask is submerged to prevent pool water from contaminating the fins. See Fig. 8.H.7.

1.34 Lower the cask to the bottom of the spent fuel pool.

1.35 Release the lift beam from the cask and slowly raise the lid.

1.36 Move the lift beam and lid from the cask loading area.

1.37 Install the front face protective cover.

2.0 UNLOADING

2.1 Unload the fuel assemblies, bundles of fuel rods or irradiated hardware from the cask cavity.

2.2 Remove the front face protective cover.

2.3 Replace the lid onto the cask.

2.4 Attach the lift beam to the cask trunnions.

2.5 Raise the cask to the pool surface and verify that the lid is properly installed.

NOTE: Spray the lift beam and all cask surfaces with clean water as they emerge from the pool.

2.6 Inspect four lid bolts for damage to threads and lubricate. Aspirate the water from four bolt holes and install the bolts hand tight.

2.7 Slowly remove the cask from the pool. Open valve V-3 on connector J-2 when it reaches the surface. Stop the inlet flow to the reservoir. Disconnect the fill hose from the reservoir and allow the skirt water to drain from the fill hose. Remove the vent hose from the J-2 connector. Spray all exposed surfaces with clean water to remove particles and water soluble contaminants.

NOTE: Raise the cask slowly enough to maintain the water level in the skirt approximately 18 inches above the pool surface.

2.8 Remove the hose from connector J-1.

2.9 Transfer cask to decontamination area. Wipe dry all wet surfaces as soon as possible using clean, lint-free rags.

3.0 PREPARATION FOR CASK RELEASE

3.1 Remove flange "C" and Attach connector "C" and connector "B" in the cask draining mode (see Figure 8.H.5).

3.2 Drain approximately 10 gallons from the cask

3.3 Inspect the remaining twelve lid bolts for thread damage and lubricate.

3.4 Aspirate the water from the twelve bolt holes and install all bolts to hand tight.

3.5 Tighten all bolts to 40 ft-lb. in the sequence shown in Fig. 8.H.8.

3.6 Tighten all bolts to 290 ft-lb in the same sequence. Repeat to verify 290 ft-lb.

3.7 Inspect o-ring gasket on "D" port plug. Install and tighten to 35 ft-lb.

3.9 Remove shield plug "A".

NOTE: Monitor for radiation streaming and take approprpiate precautions to minimize exposure.

3.10 Gravity drain the cask completely by using connector "C"

NOTE: Low pressure air or nitrogen may be used at certain facilities to assist in draining the cavity.

3.11 Remove connector "C".

3.12 Inspect the bolt threads and the O-ring gasket and the seating surfaces on shield plug "A" and "C". Tighten each bolt to 35 ft-lb.

3.13 Deleted.

3.14 Deleted.

3.15 Check for removeable contamination on all exposed cask and skirt surfaces and decontaminate as necessary to reduce to acceptable levels. The cask must be decontaminated to comply with the requirements of 10CFR Paragraph 71.87 (i) prior to shipment.

NOTE: If the cask is to be shipped as an empty package the requirements of 49CFR Paragraph 173.427 must be satisfied.

3.16 Remove the skirt. Check for removeable contamination on newly exposed cask surfaces and fins. Decontaminate as necessary to assure compliance with 10CFR Paragraph 71.87 (i).

3.17 Attach the lift beam to the cask trunnions.

3.18 Lift the cask and remove the bottom protective cover. Check the cask rear face for removeable contamination and decontaminate as required to reduce to acceptable levels.

3.19 Transfer the cask from the decontamination area to the vehicle area and position over the transport trailer.

3.20 Examine the rear trunnions for damage to the inner shoulder surface and lubricate. Lower the cask so the rear trunnions engage the trunnion supports. Rotate the cask from vertical to horizontal position.

3.21 Install cask trunnion tie-downs and tighten to 125 ft-lbs.

3.22 Replace trunnion impact limiters and shock absorbing covers and tighten to 35 ft-lb and 290 ft-lb respectively.

NOTE: Inspect all bolt threads and lubricate prior to installation.

4.0 PREPARATION FOR CASK SHIPMENT

4.1 Measure cask surface dose rates and verify they are below regulatory limits.

4.2 Attach security seals to front and rear shock absorbing cover bolt holes.

4.3 Attach appropriate regulatory shipping labels for transport of the unloaded packaging.

4.4 Perform final cask inspection to verify condition is acceptable for shipment.

4.5 Close trailer enclosure and perform final external dose rate measurements. Provide the driver with appropriate shipping pages and documentation, as required. Release for transport.

324
325
326

Blank pages

ANNEX H TO CHAPTER VIII

CASK OPERATIONS FIGURES

The attached figures are provided to assist in review of the draft loading and unloading procedures (refer to Annex F and G). As a specific operations arrangement is required, the text of the procedure will indicate the need and refer to the appropriate figure.

Components and equipment are identified on the figures as well as system interfaces (e.g. radioactive offgas connection).

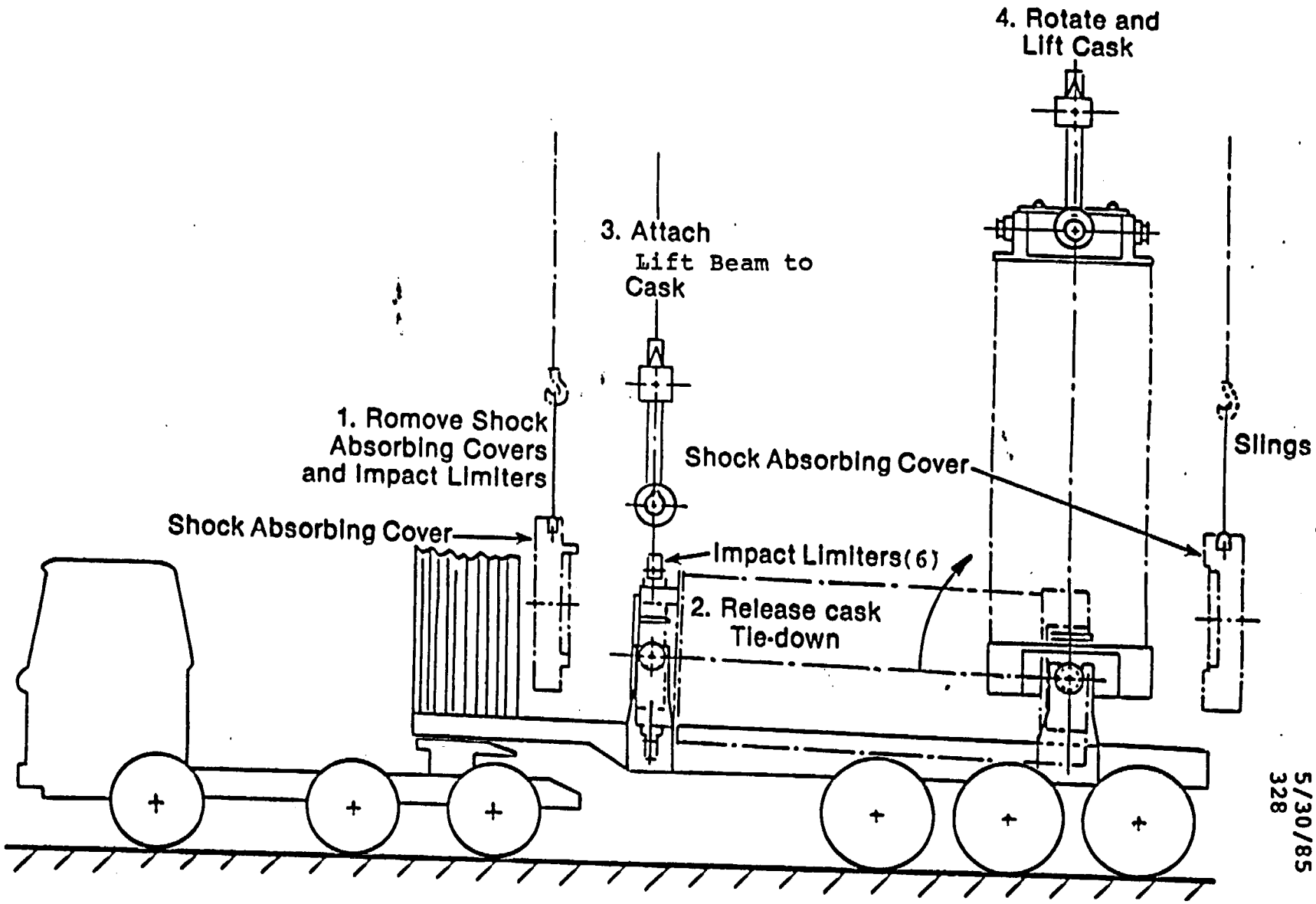

Trailer Loading/Unloading Operations

Figure 8.H.1

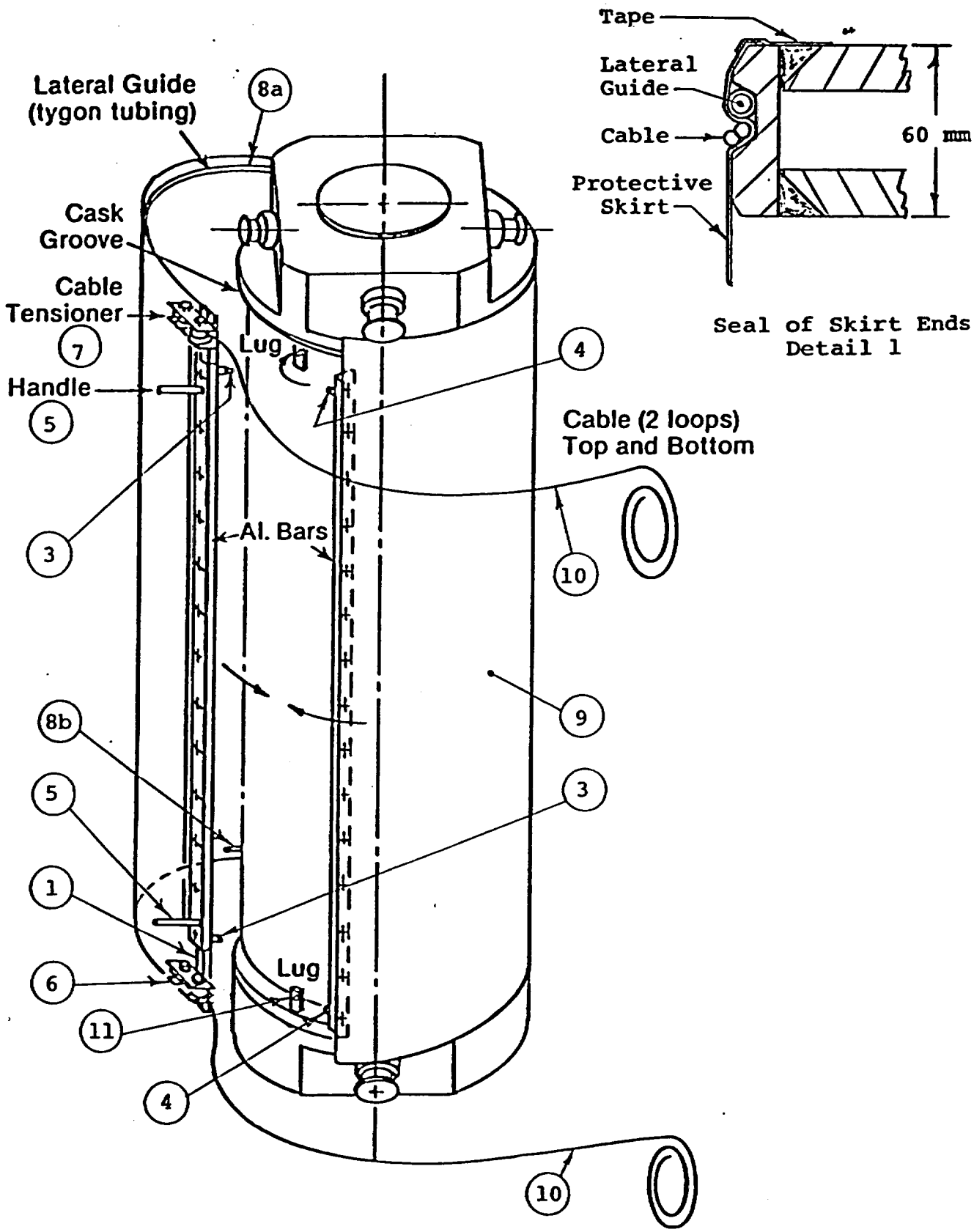

Protective Skirt Installation

Figure 8.H.2

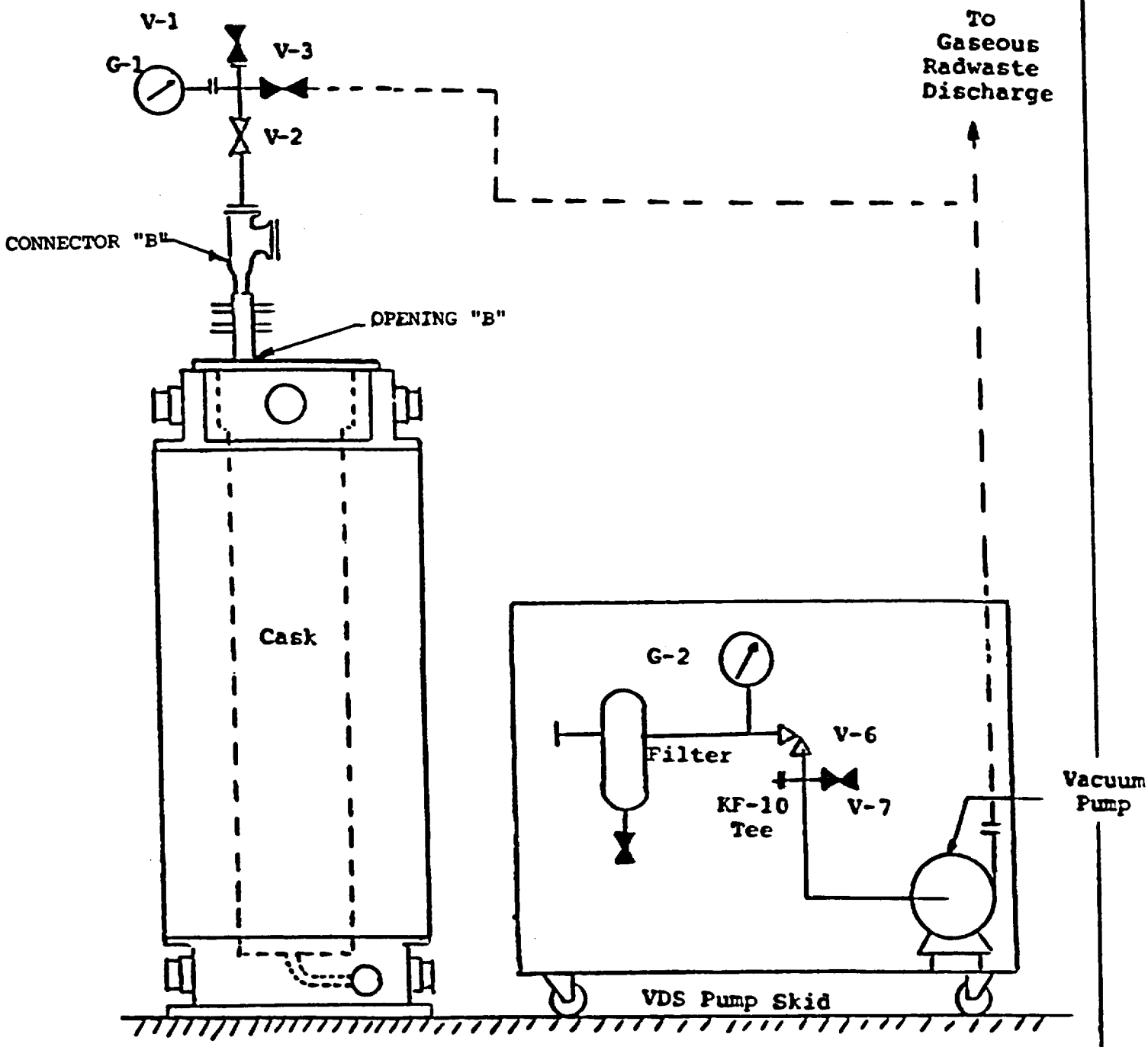

Cask in Vent Mode

Figure 8.H.3

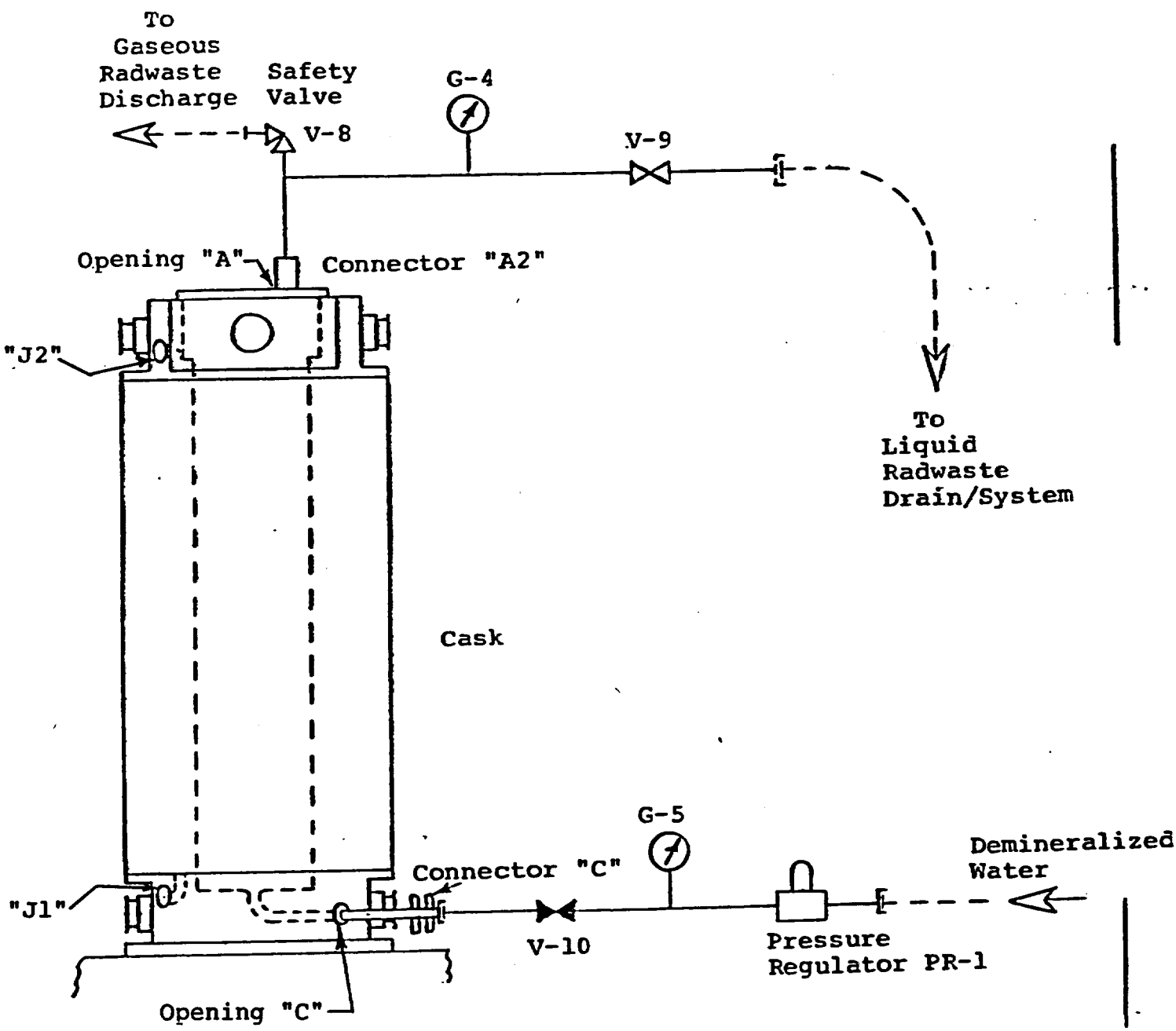

CDS in Cask Filling/Cooldown Mode

Figure 8.H.4

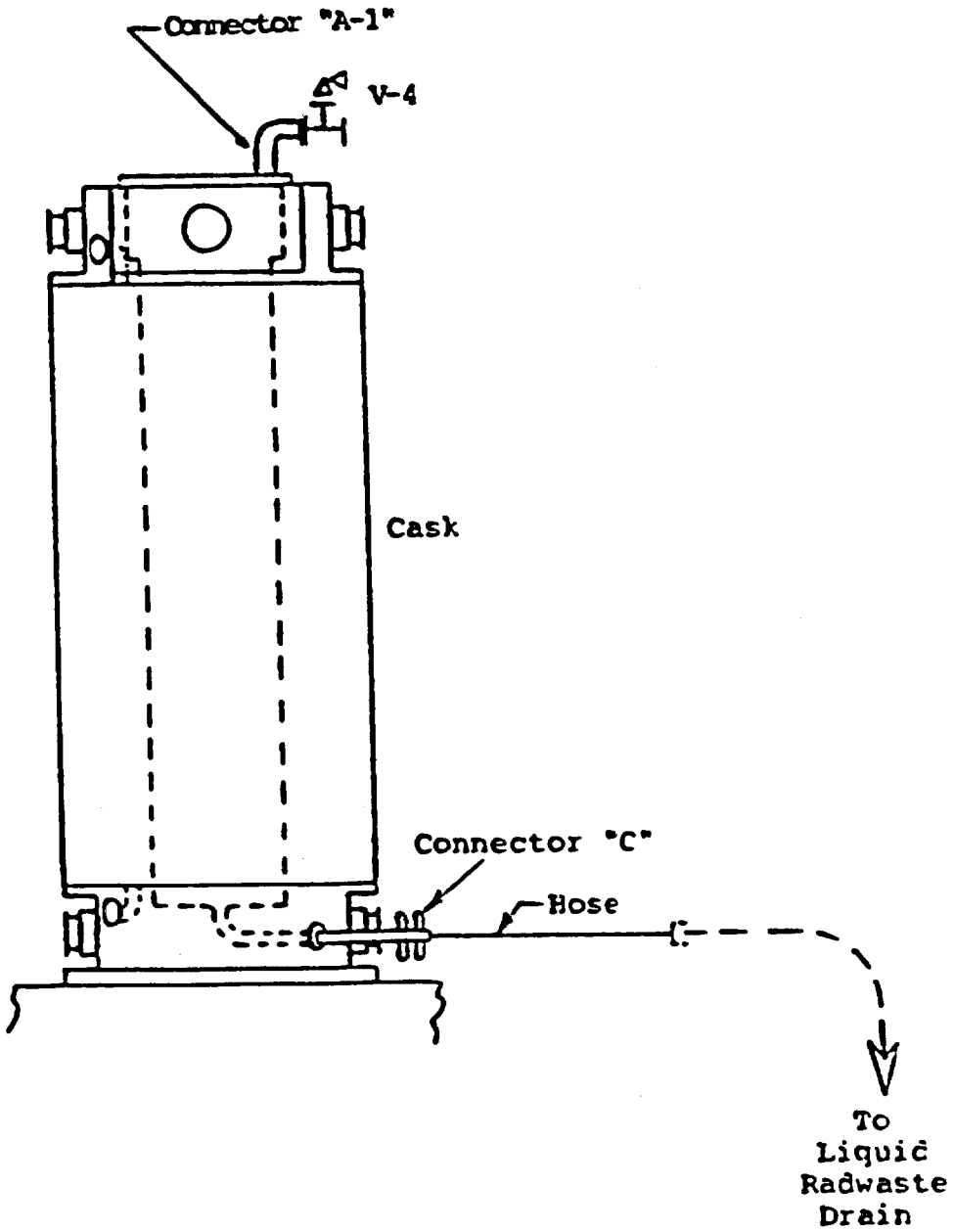

Loaded Cask in Draining Mode

Figure 8.H.5

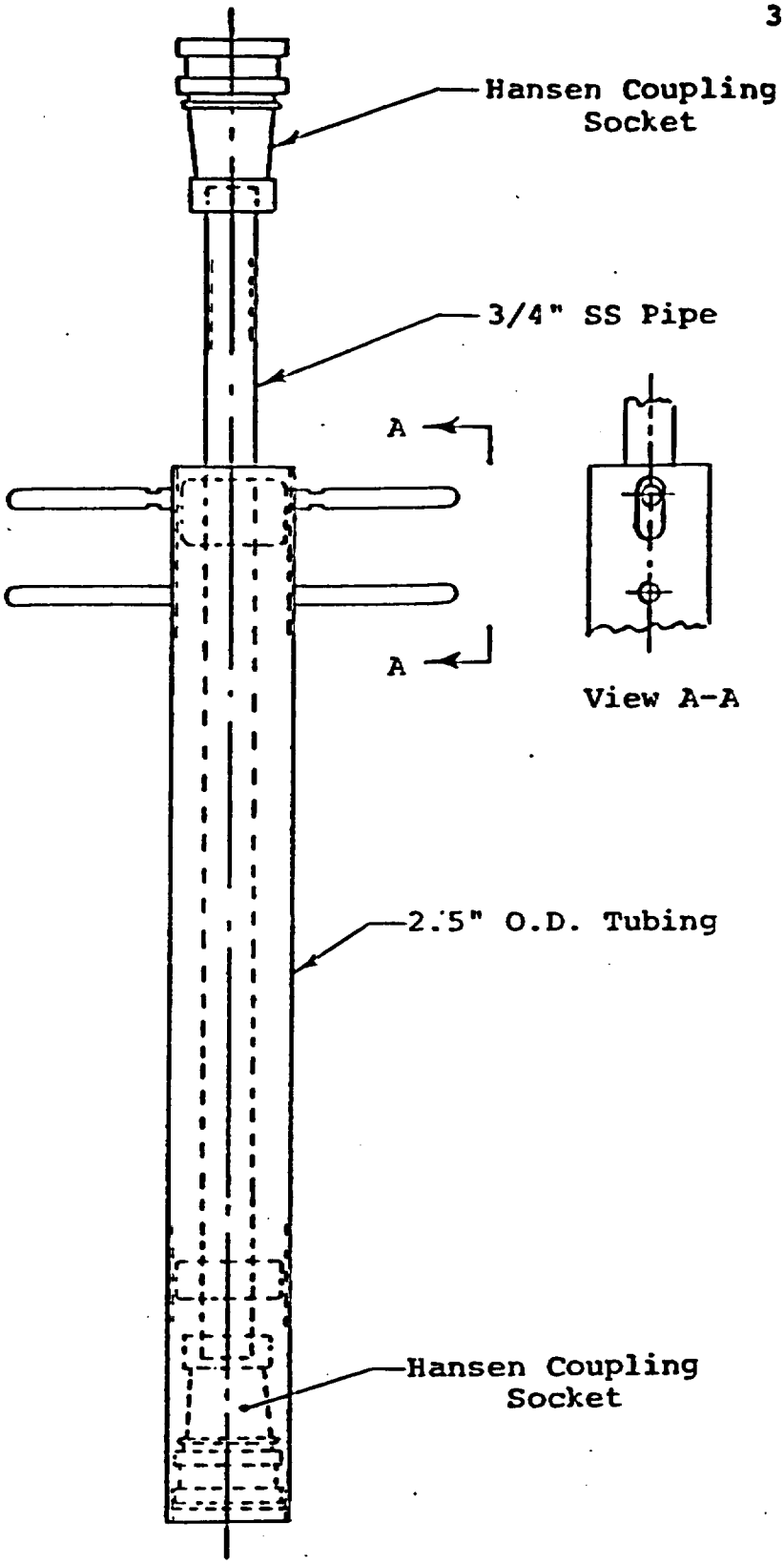

Connector "C"

Figure 8.H.6

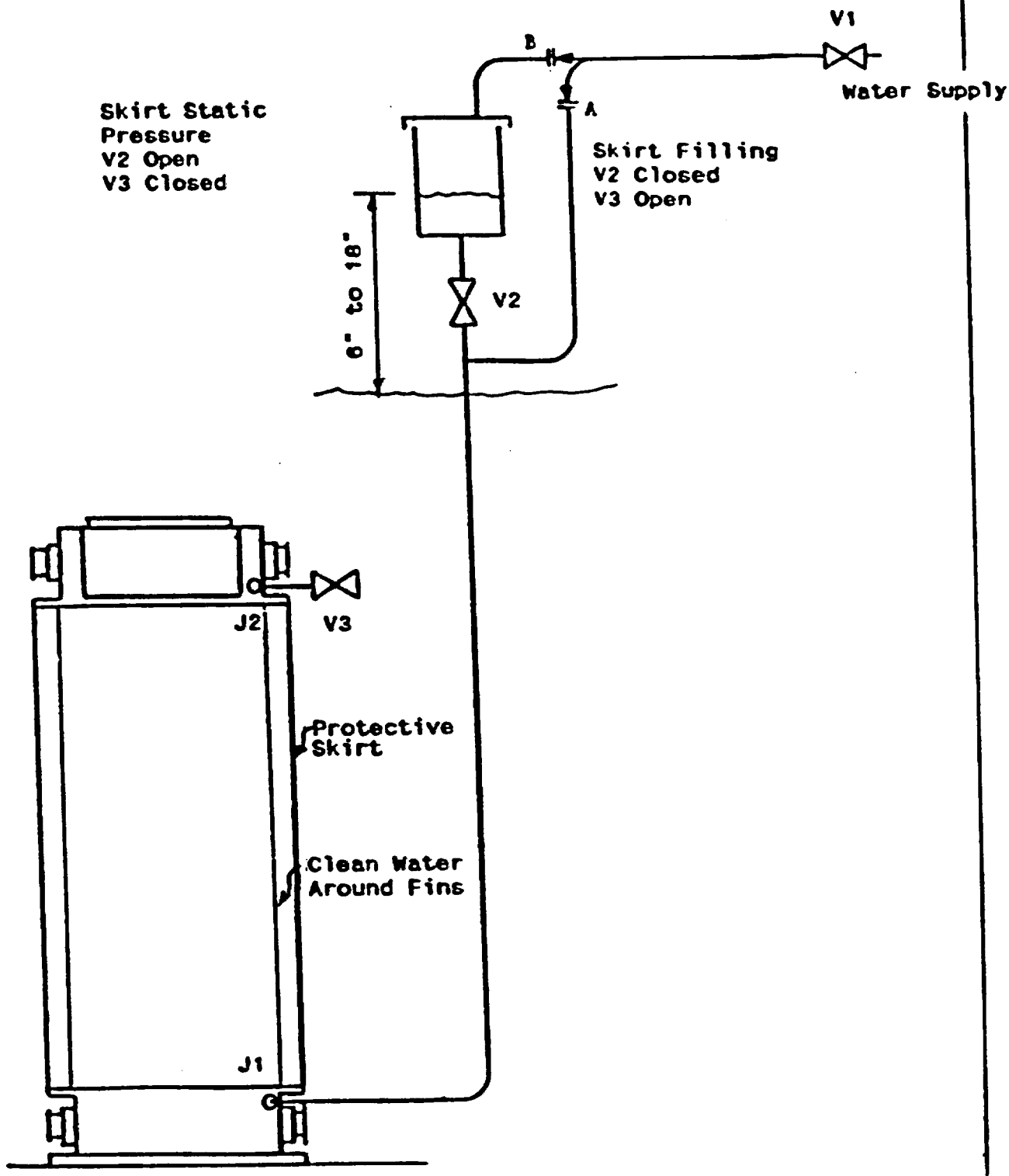

Skirt Fill System

Figure 8.H.7

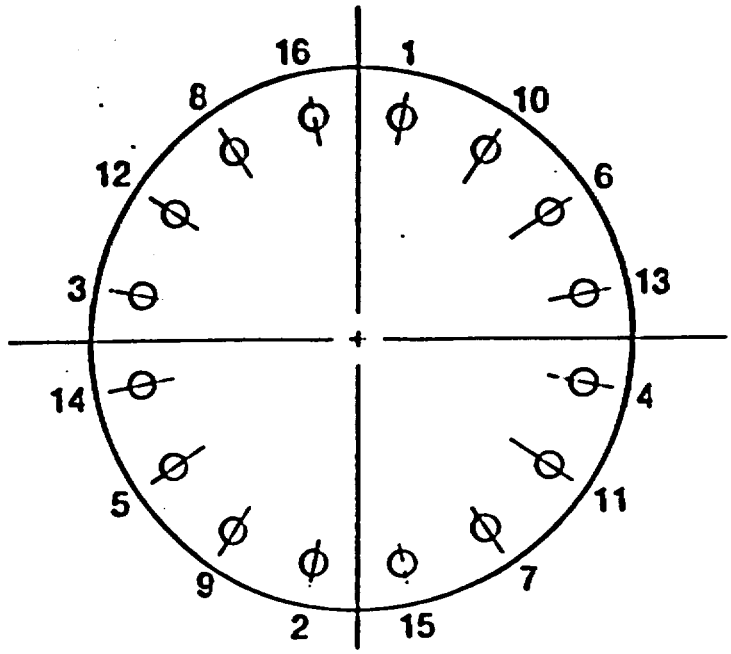

(a) Lid

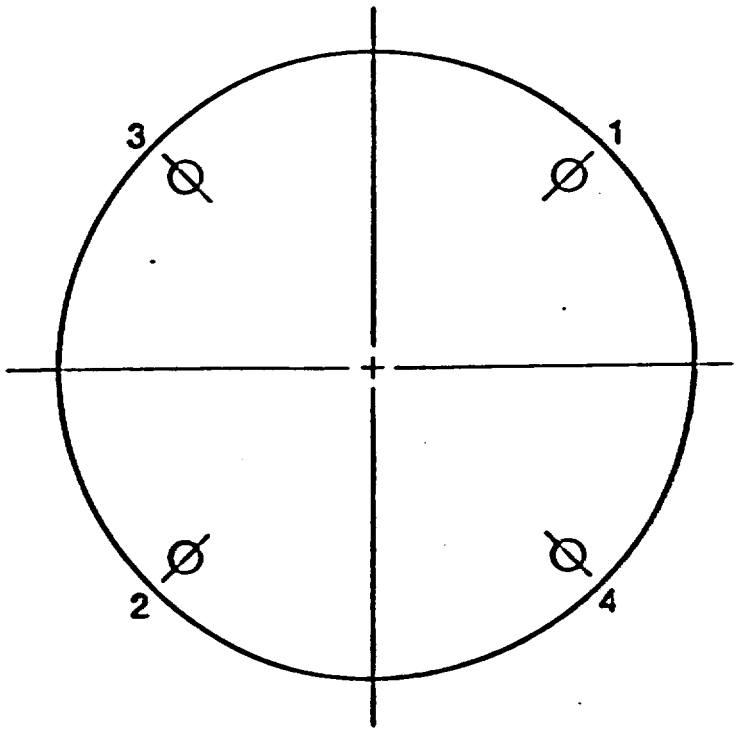

(b) Shock Absorbing Covers

Lid and Cover Bolt Tightening Sequence

Figure 8.H.8

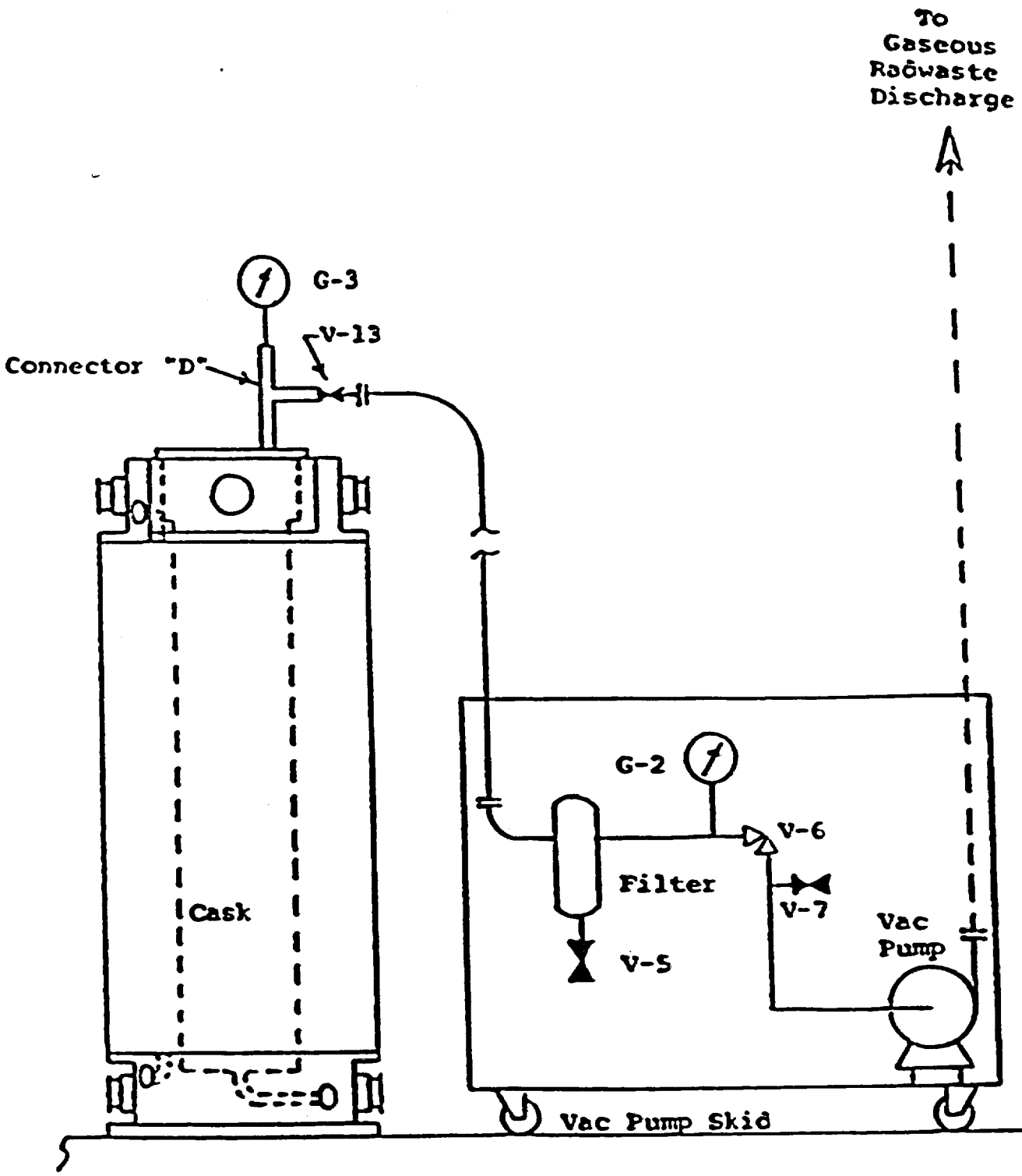

VDS in Lid Tightness Testing Mode

Figure 8.H.9

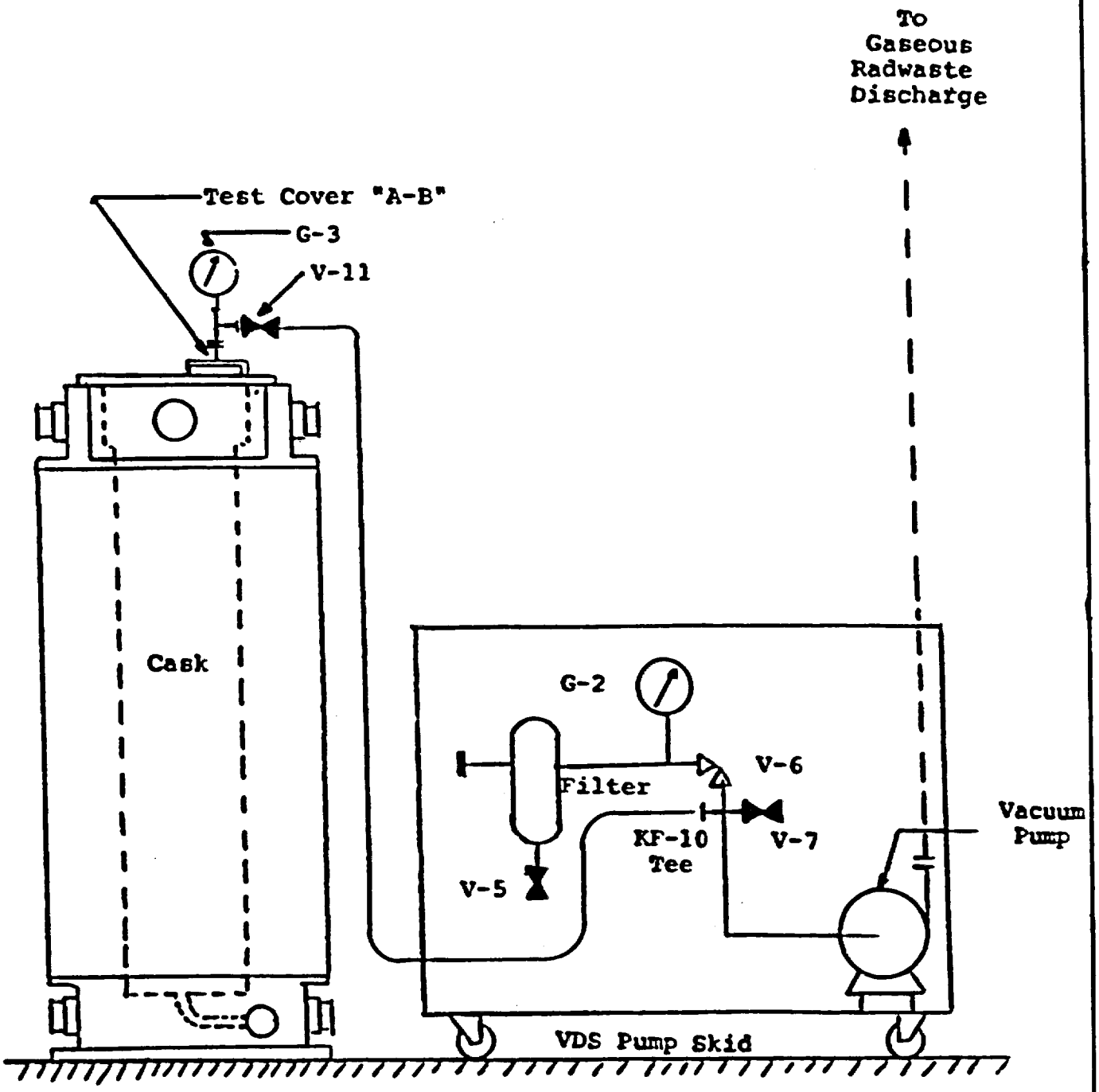

VDS in "A" and "B" Opening
Leaktightness Testing Mode

Figure 8.H.10

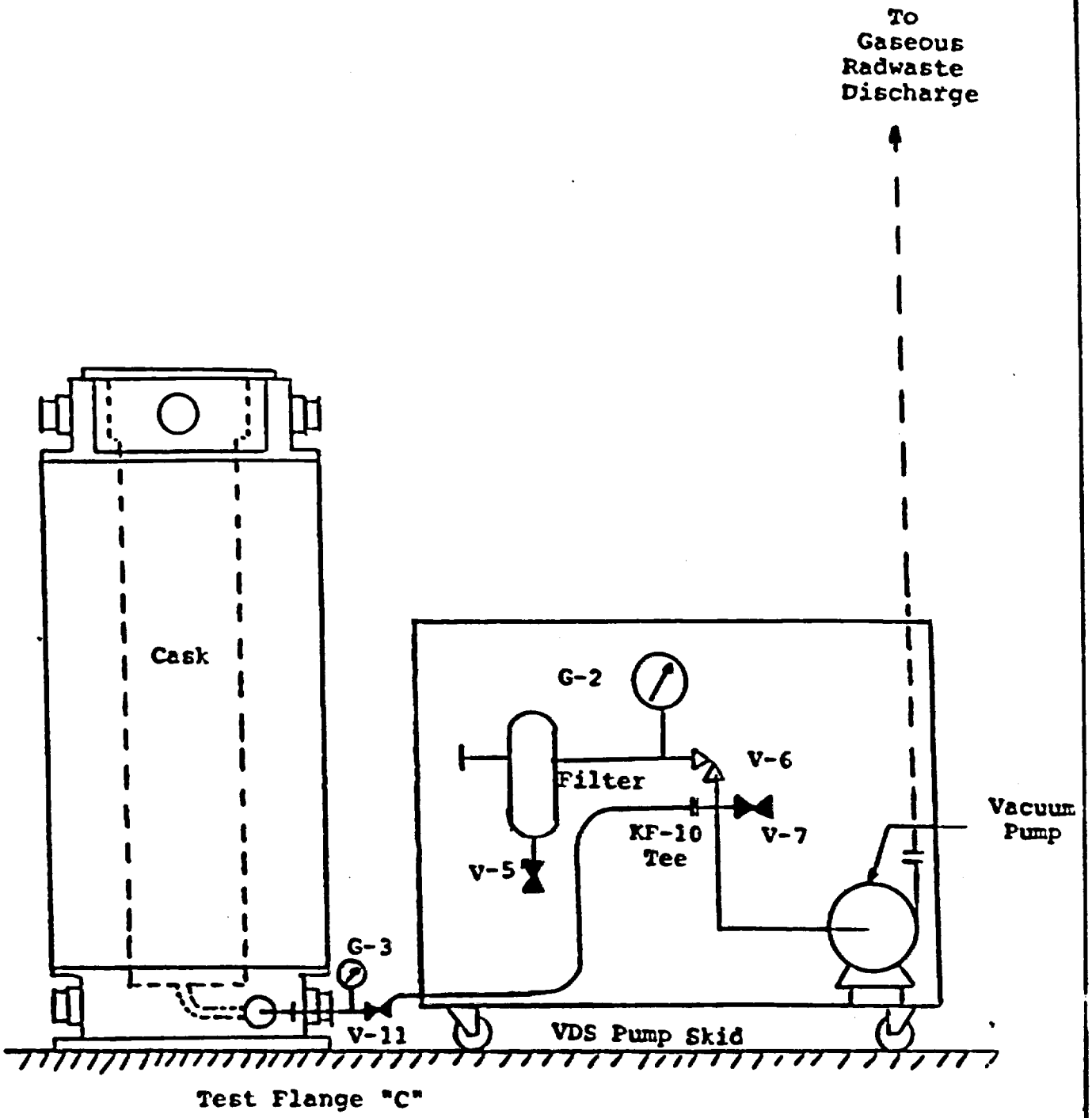

VDS in "C" Opening Leaktightness
Testing Mode

Figure 8.H.11

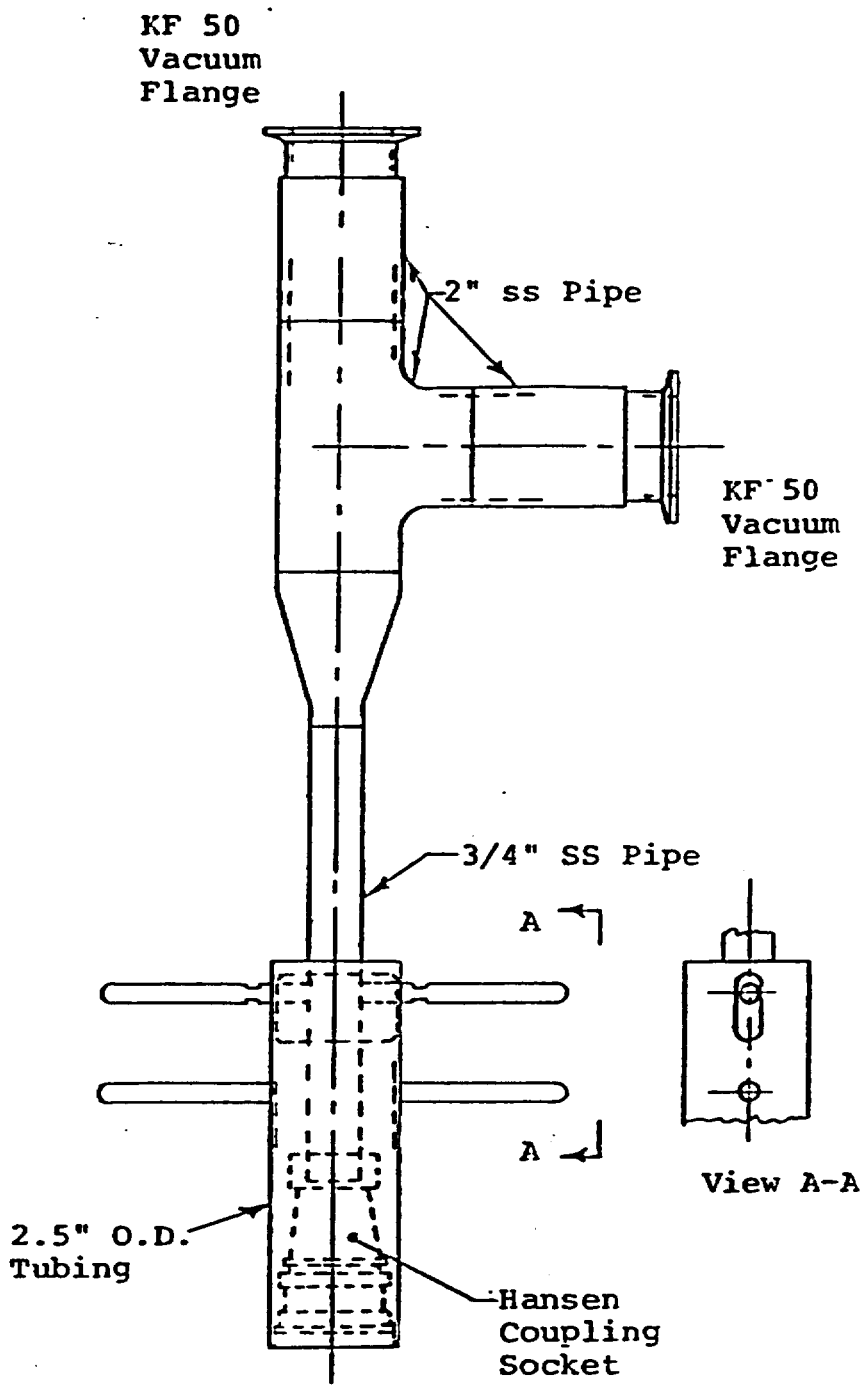

Connector "B"

Figure 8.H.12

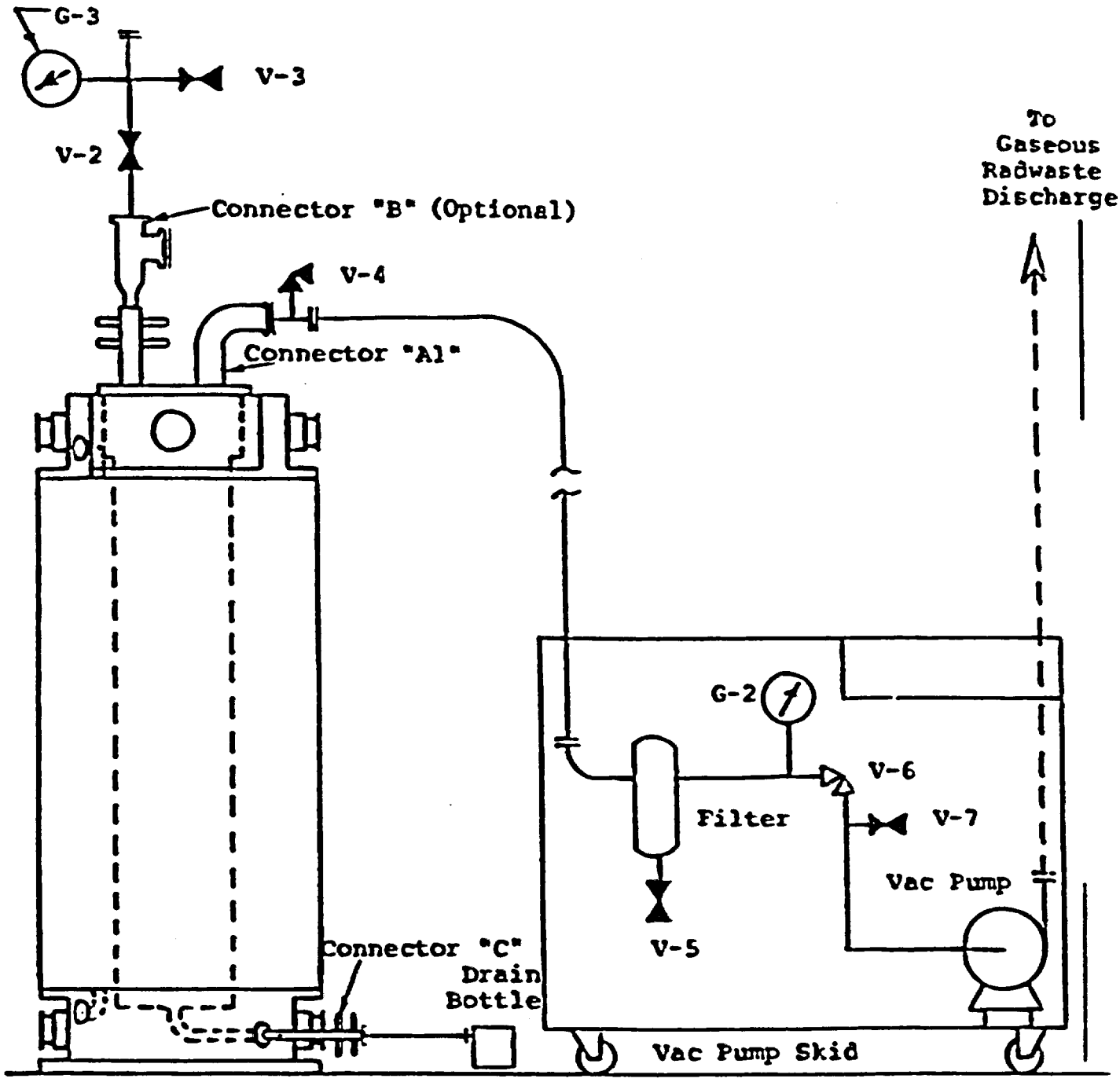

VDS in Vacuum Drying Mode

Figure 8.H.13

D E L E T E D

D E L E T E D

D E L E T E D

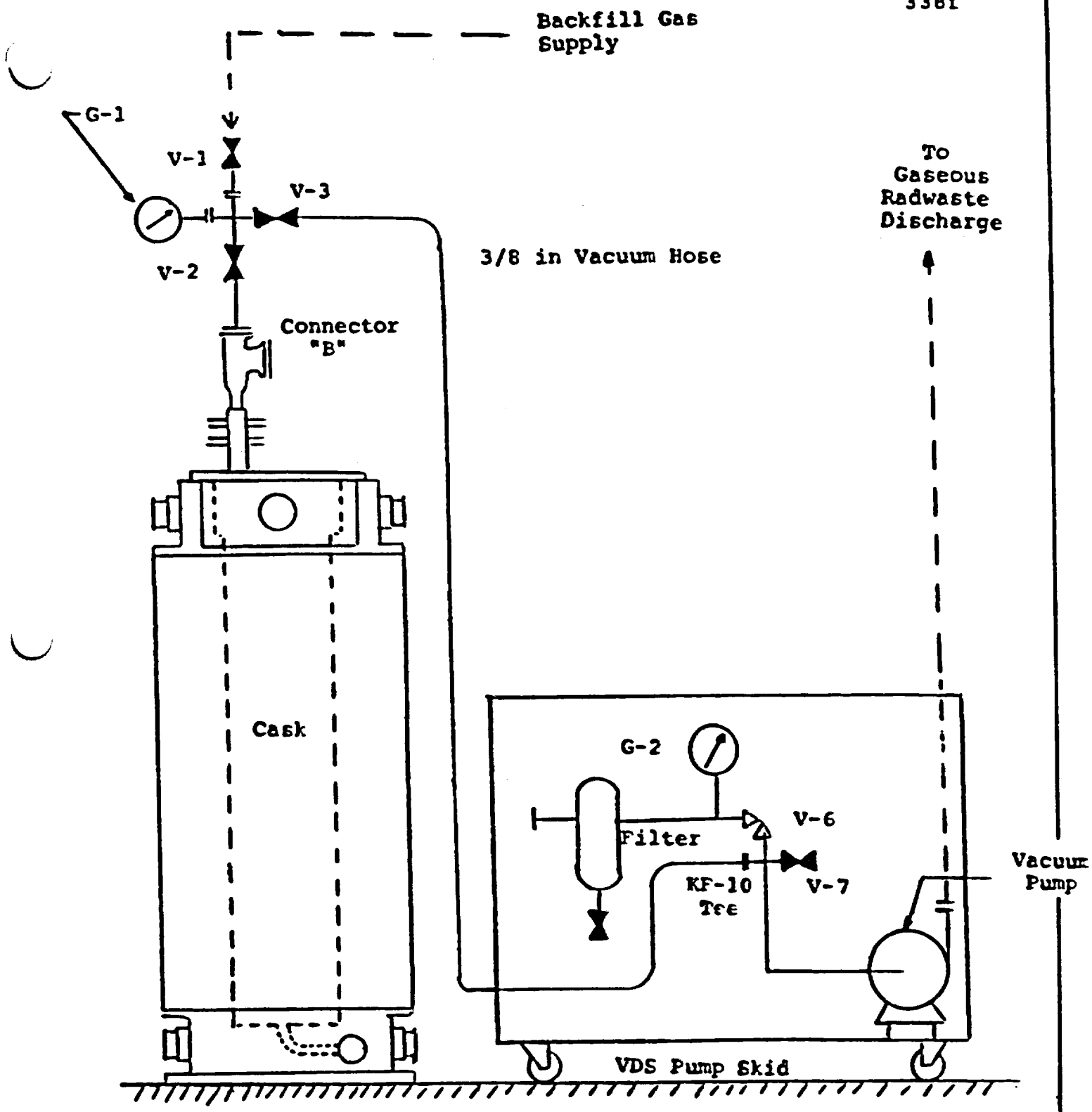

VDS in Backfill Mode

Figure 8.H.17

- ANNEX I TO CHAPTER VIII -
PROCEDURE FOR DRYING THE PACKAGE CAVITY

1. REASONS FOR DRYING THE CASK CAVITY OF A LOADED PACKAGE

1.1 At the thermal equilibrium under normal conditions of transport, residual water remaining in the cavity shifts to the cooler zone except the amount turned into steam, the partial pressure of which is equal to the pressure of the steam in equilibrium with liquid water at the temperature of the cooler zone.

As shown in Chapter IV, Annex D for fuel shipments, this temperature (t'_6) is respectively 163.5°C and 138°C for TN8 and TN9 and less than 163.5°C for TN8L. Corresponding steam pressures are 6.9 and 3.5b.

Therefore, assuming a rather large amount of water remained in the cask cavity, it may cause a total pressure of 8.22 b (for TN8) instead of 1.32 b, as considered in the evaluation of the "maximum normal operating pressure" and determination of the maximum permissible leakage rate equivalent to the package containment requirement in accidental conditions of transport (refer to ANSI N14.5, Annex C to Chapter III and Annex C to Chapter VIII).

1.2 Under accidental conditions of fire, any residual water turns into steam and the pressure depends upon the actual amount left in the cavity. Even a small amount of water would change the permissible leakage rate equivalent to the package containment requirement in accident conditions of transport (refer to ANSI N14.5, Annex C to Chapter III and Annex C to Chapter VIII).

2. BASIC PRINCIPLES OF DRYING PROCEDURE

The drying procedure is based upon water evaporation and vapor diffusion in vacuum.

Decay heat facilitates drying of the fuel assemblies and causes most of the residual water to condense on the surface of the fuel compartments and drip to the drain orifice where it is collected in a drain bottle.

The remaining residual water turns into vapor and is discharged through the vacuum pump of the VDS.

The packaging cavity may be considered as dry when its pressure remains lower than the vapor pressure of water at the minimum cavity surface temperature, when isolated for a suitable period under vacuum.

Because vacuum improves the diffusion rate of vapor, one may expect that the suitable isolation period is rather short. Experience confirms that a period of 10 minutes is sufficient to observe.

3. DRYING PROCEDURE

Refer to Draft Loading Procedure (Annex F) and to Fig. 8.H.13.

3.1 Drain the cask cavity through the drain opening "C" per Annex F.

3.2 Install Connector "B" to opening "B" with gage G-1 installed. (Optional if G-2 has a valid calibration sticker).

3.3 Remove Shield Plug "A".

3.4 Install Connector A-1 to opening "A" and connect hoses to VDS.

3.5 Install Connector "C" with drain bottle installed to Hansen plug at opening "C".

3.6 Start vacuum pumping by opening valve V-6 and continue pumping until a pressure of approximately 40-50 mbar is reached.

3.7 Close valve V-6 and open valve V-4 to allow air to rush into the cask. This rapidly moving air sweeps down water droplets to the bottom of the cask where it collects in the drain bottle.

3.8 Close valve V-4, open valve V-6 and repeat lowering the pressure and breaking vacuum until no more water collects in the drain bottle.

3.9 Remove the connector from opening "C". Disconnect drain bottle and drain water to suitable contaminated drain.

3.10 Measure the temperature (t) of the cask cavity using thermocouples in "F1", "F2", "F3". Determine the vapor pressure (P) at the lowest cavity wall temperature.
NOTE: Thermocouples not required for irradiated hardware.

3.11 Open Valve V-6 and continue to lower cavity pressure until the vacuum is stable at less than P/2 or 10mbar, whichever is less. Isolate the vacuum pump by closing valve V-6 in order to verify dryness. Dryness verification testing shall be performed at 10 + 2, -0 mbar for irradiated hardware shipments.

3.12 Dryness is considered as achieved if one cannot observe an increase of pressure greater than 3 mbar in a period of 10 minutes.

3.13 If the pressure increase exceeds the above limit, open valve V-6 and continue vacuum drying to remove residual vapor. Repeat dryness verification until dryness is achieved.

- ANNEX J TO CHAPTER VIII -
LEAKAGE TESTING FOR PACKAGE CAVITY LEAKTIGHTNESS

1.0 Procedure for Testing Package Cavity Leaktightness

1.1 After completion of the package cavity drying operation and verification of dryness (see Annex I to Chapter VIII), arrange the Vacuum Drying System (VDS) in the leak testing mode.

1.2 Leak test shield plug "A" and blind flange "B" individually by installing the Test Cover "A-B" over the shield plug or blind flange. Refer to Fig. 8.H.10.

1.3. Open valve V-11 and evacuate the volume in the test cover, as indicated on gage G-3, to approximately 10 mbar.

1.4. Close valve V-11 and measure pressure rise over test period as indicated on G-3.

1.5 Record final pressure, calculate and record the test leakage rate.

1.6 Leak test drain Hansen plug "C" by installing Test Flange "C" in place of Blind Flange "C". Refer to Fig. 8.H.11.

1.7 Open valve V-11 and evacuate volume between flange and Hansen plug, as indicated on gage G-3, to approximately 10 mbar.

1.8 Close valve V-11 and measure pressure rise over test period as indicated on G-3.

1.9 Record final pressure, calculate and record the test leakage rate.

1.10 Verify calculated leakage rates meet the acceptance criteria.

2.0 Acceptance Criteria and Test Sensitivity

The time period and vacuum gauge are selected to achieve a sensitivity equal to or less than 5×10^{-3} atm cm^3/s. For each test, the allowable leakage rate shall be less than that calculated for transport (0.01 atm cm^3/s) with a reduction factor applied to assure that the sum of the test leakage rates for openings "A", "B", "C" and "D" is less than the total leakage rate calculated for transport.

3.0 Corrective Actions

If any test reveals a leakage rate greater than the allowable, the leakage area shall be determined, corrective actions taken as needed, and the test repeated.

4. PROCEDURE FOR TESTING LID CLOSURE TIGHTNESS

Refer to Fig. 8.H.9.

This test is performed before draining the package cavity in order to minimize corrective actions needed in case of lid gasket leakage.

a) Install the vacuum drying system to orifice D. Open valve V-13. Obtain a vacuum reading of approximately 10 mbar on gage G-3.

b) Close valve V-13 and measure pressure rise over test period as indicated on gage G-3.

c) Record final pressure and calculate pressure rise over test period.

The time period and vacuum gauge are selected to achieve a sensitivity equal to a maximum of .005 atm cm^3/s. For this test, the allowable leakage rate shall be equal to that calculated for transport, (0.01 atm cm^3/s) with a reduction factor applied to assure that the sum of leakage rates tested for connections "A", "B", "C", and "D" is less than 0.01 atm cm^3/s.

For the test result to be acceptable, the observed leakage must be less than the calculated leakage limit after the reduction factor is applied.

If the test reveals a leakage larger than the limit the leakage area must be either immediately repaired or the package shall be returned to the spent fuel pool. The gaskets and flanges shall then be inspected and repaired as needed, the packaging shall be removed from the pool. The lid closure shall again be tested for tightness.

KEFF VERIFICATION

1. PRINCIPLE

The LWR irradiated fuel transported in the TN8 and TN9 packaging normally contains enough Cm242 and Cm244 to give a measurable neutron dose rate at the packaging surface.

That neutron dose rate depends upon constant parameters (packaging shielding and geometry) and variable parameters (fuel geometry and Cm contents, package Keff and neutron self-absorption of the cavity medium).

Assuming an even repartition of neutron sources in the fuel assemblies, the neutron dose rate measured at the surface of the dry package is :

$$Nd = K \times \frac{\mu d}{1 - e^{-\mu d \times l}} \times \frac{1}{1 - Keff_d} \qquad (1)$$

When the cavity is filled with water, the dose rate becomes :

$$Nh = K \times \frac{\mu h}{1 - e^{-\mu h \times l}} \times \frac{1}{1 - Keff_h} \qquad (2)$$

Using the following notations :

K = constant taking into account the package geometry and neutron shielding.
N = neutron surface dose rate
μ = neutron transport cross section of the medium inside the cask cavity (fuel/water or air mixture).
l = thickness of the above medium.

(1) and (2) give :

$$(3) \qquad \frac{Nh}{Nd} = \frac{\mu d}{\mu h} \times \frac{1 - e^{-\mu h \times l}}{1 - e^{-\mu d \times l}} \times \frac{1 - Keff_d}{1 - Keff_h}$$

As μd and μh, 1 and $Keff_d$ may be calculated from the fuel and packaging characteristics, we have :

$$(4) \qquad \frac{Nh}{Nd} = \frac{A}{1 - Keff_h}$$

where A is a constant for a given cask contents.

Finally we obtain the following equation :

$$(5) \qquad Keff = Keff_h = \frac{Nh - A \times Nd}{Nh}$$

That equation shows that the Keff of the water moderated package may be evaluated from the change of neutron dose rate at the packaging surface with respect to the water contents of its cavity, when the constant A is known.

In fact, the calculation of A necessitates to consider the actual neutron source repartition inside the package cavity.

That repartition may be deducted from the package criticality calculations or subject to conservative assumptions.

2. PROCEDURE

2.1. The neutron dose rates are measured at cask surface when the cavity is dry (Nd) and when filled with cool water (Nh) using a neutron monitor system.

The counting period is adjusted in order to obtain a precision of 10%.

2.2. The constant A is calculated based upon the neutron source repartition obtained from SAR criticality calculation or alternative conservative assumptions.

2.3. Experimental Keff is given by the formula :

$$Keff = \frac{Nh - A \times Nd}{Nh}$$

Assuming that A is evaluated with a precision of 20 %, the resulting error on Keff is ± 0.4 (1 - Keff).

3. ACCEPTANCE CRITERIA

3.1. Experimental Keff (K'eff)

Acceptance criteria depends upon agreed limitations for Keff and upon the precision of the evaluation of the constant A (defined in § 1).

Assuming that Keff is not allowed to exceed 0.95 and a precision of 20 % concerning the evaluation of A, one should verify :

$$K'eff + 0.4\ (1 - K'eff) < 0.95$$

$$K'eff < 0.916$$

This inequality is the acceptance criteria.

3.2. Variation of neutron poison efficiency with time

Experimental Keff (K'eff) has to remain within counting precision for similar contents.

4. CORRECTIVE ACTION

In case of disagreement between the experimental and calculated Keff, the design criticality calculations will be reviewed and the allowable package contents may be changed.

In case of abnormal loss of neutron poison efficiency, this will be analyzed and the allowable package contents may be changed.

- ANNEX L TO CHAPTER VIII -
HEAT DISSIPATION CAPABILITY VERIFICATION

The purpose of this test is to verify that the heat dissipation capability of the packaging does not change with time for an unforseeable reason. This test will be conducted after the first loading and repeated once every 2 years at minimum.

The thermal performance test is not required at periodic intervals when the maximum decay heat load per package does not exceed 25% of the design heat load.

TEST PROCEDURE

After the cask has been loaded, dried, and prepared for shipment, the cask will be allowed to reach thermal equlibrium (as defined in Annex E to Chapter VIII) in an area of large dimensions which is as free of drafts as possible. The cask will be in the horizontal position with the shock absorbing covers installed.

After thermal equilibrium is reached, measurements will be made of areas of the cooling fins and of the cask cavity wall using thermocouple wells F1, F2, and F3.

ACCEPTANCE CRITERIA

The verification will be deemed satisfactory if the measured temperatures are found compatible with the calculated values when allowance has been made for actual decay heat, ambient conditions, or other test conditions. These calculations shall use the formulas and data of Chapter IV of the present SAR.

CORRECTIVE ACTION

Failure to satisfy the test criteria will require further analysis. Corrective repairs will be made as deemed necessary and the test repeated. This action will continue until the acceptance criterion is satisfied.

SHIELDING EFFICIENCY VERIFICATION

The purpose of this test is to verify that the shielding of the packaging does not change with time for any unforseable reason.
This test shall be conducted after first loading and repeated every 2 years at minimum.

1 - PROCEDURE

Before dose rate measurements one shall assure that the packaging is in normal transport conditions (i.e. fully loaded with fuel assemblies, dried, leaktight, equipped with its extremity covers and in the horizontal position).

The whole surface is monitored for gamma and neutron dose rates, using instruments calibrated and acceptable for that use.
In addition to a chart of measurements, the type and characteristics of the instruments will be detailed as part of the report.

Special attention shall be paid to detect any beaming through defects in the shielding, but inspections must also allow for the possibilities of contamination build-up indications being the cause of large dose rate indications.

2 - ACCEPTANCE CRITERIA

The test is deemed satisfactory if the dose rates (gamma + neutron) do not exceed 200 mRem, or equivalent, at packaging surfaces..

3 - CORRECTIVE ACTION

Dose rate measurements which exceed the acceptance criteria will initiate an immediate inspection of the packaging area.

Analysis of the problem will be made and followed by decontamination operations (i.e. internal cavity flushing, etc) or repairs if deemed necessary.

After corrective action, this verification will be repeated for the entire packaging.

- ANNEX N TO CHAPTER VIII -

CONFIGURATION X LID

All activities related to packaging acceptance, operations and maintenance shall be in accordance with Chapter VIII of the SAR except as noted below.

As part of the acceptance program at the fabricator, a hydraulic test shall be performed with the Configuration X lid in accordance with the requirements of Annex B to Chapter VIII. The minimum test pressuree shall be 10 bar. The test shall be performed with the Configuration X lid installed on a test fixture mock-up of the lid/package interface. The lid and flange bolts shall be installed and torqued to the appropriate values as indicated on the drawings.

As part of the acceptance program at the fabricator, leakage tests for containment system fabrication verification shall be performed on the double o-ring seals of the lid, and on the blind flange, shield plug and Hansen plug. The leakage testing shall be performed in accordance with the requirements of Annex C to Chapter VIII. The measured leakage rate shall be less than 2.8×10^{-4} atm cm^3/sec.

After installation of the Configuration X lid to a TN-8/8L packaging body and prior to first use with that body, the containment system fabrication verification leakage testing of the double o-ring seals of the lid shall be repeated. The leakage testing shall be reperformed after the third use and on an annual basis thereafter in accordance with the maintenance program. The measured leakage rate shall be less than 2.8×10^{-4} atm cm^3/sec. The containment system fabrication verification leakage testing shall be reperformed when a Configuration X lid is installed on a different TN-8/8L packaging body.

After the first fuel loading of a TN-8/8L packaging with the Configuration X lid installed, a shield test shall be performed. Dose rate measurements of the radiation levels at the lid, drum surfaces and the front shock absorbing cover shall be measured, recorded and analyzed in accordance with the requirements of the Shielding Efficiency Verification procedure, Annex M to Chapter VIII.

The operation of TN-8/8L packagings with the Configuration X lid installed shall be in accordance with the draft loading and unloading procedures in Chapter VIII and the requirements of 10CFR71.87. Prior to each shipment of a TN-8/8L Configuration X package, radiation surveys shall be performed in accordance with 49CFR173.397 and 10CFR71.47.

- CHAPTER IX -

BIBLIOGRAPHY

1. Règlement Français - Arrêté du 24.6.1974 relatif au transport et à la manutention de matières dangereuses (Transport des Matières Radioactives) (Classe IV b).

2. Regulations for the Safe Transport of Radioactive Materials - 1973 revised edition - IAEA - Vienna 1973.

3. U.S. DOT Regulations (49CFR - parts 170-190 and 14CFR - part 103)

4. "A 30 Ton Cask for Shipment of PWR-BWR Fuel". A.AUPETIT and P. BLUM, Proceedings of the Second International Symposium on Packaging and Transportation of Radioactive Materials. October 14-18, 1968. Gatlinburg, Tenn. CONF 681001.

5. BLUM, Paul T. "The Use of Plaster for Insulation of Lead Shielded Radioactive Materials Packagings". Lead Shielding and Nuclear Safety Conference, LONDON, 24-27 March, 1969, Lead Development Association, LONDON, England.

6. "Practical Experience in Spent Fuel Shipping and Relation to Cask Concepts". BNWL - SA 3906 - RICHLAND 1971.

7. D.B. WEAVER. "Sequoyah Nuclear Power Plan", Nuclear Engineering International Vol.16, n° 185, pp. 845-869.

8. H.M. FERRARI. "Pressurization Improves Fuel Rod Reliability", Nuclear Engineering International, July-August 1970, Vol.15, N° 170.

9. L.B. SHAPPERT. A Guide for the Design, Fabrication, and Operation of Shipping Casks for Nuclear Applications. ORNL-NSIC-68, February 1970, Oak Ridge National Laboratory.

10. ORNL-2127, Part 1, Vol.1 - Physics and Mathematics TID 4500 (13th Edition).

11. "Physical and Mechanical Properties of Zircalloy 2 and 4". WCAP - 3269 - 41 - May 1965.

12. USAEC Regulations (10CFR - Part 71) Revised 1975.

13. CRC - Handbook of Chemistry and Physics - 50th Edition (1969).

14. "Properties of Zircalloy 4 Tubing" - WAPD - TM - 585.

15. "Fracture of Cylindrical Fuel Rod Cladding due to Plastic Instability" - WAPD - TM - 651 (1967).

16. J.P. PEMSLER, "Corrosion of Zirconium Alloys in 900 and 1000 °F Steam" - Nuclear Metals - Concord, Mass.

17. Theodore ROCKWELL. Reactor Shielding Design Manual, First Edition. D. Van Nostrand Company, Inc.. Princeton, New Jersey, 1956.

18. R. G. JAEGER. Engineering Compendium on Radiation Shielding. Vol. 1, Shielding Fundamentals and Methods, Springer-Verlag, New-York, 1968.

19. D.J. DUDYIAK and J.E. SCHMUCKER "Hydrogenous Material Dependent Removal Cross Section of Lead for Fast Neutron Biological Dose". WAPD - TM 662 UC 34 - Physics (June 1968).

20. M.J. O'BOYLE - "Yankee Core Evaluation Progress Report for Period ending June 30, 1967" - WACP - 6085 (October 1967).

21. S.J. RINSBAW, E.E. KETCHERN, "Curium Data Sheets" - ORNL 4187 - December 1967.

22. J. E. HOCKETT and E. G. ZUKAS, "The Response of Iron to Dynamic Compression". Institute of Physics Conf. Ser. n°21 - Los Alamos Scientific Laboratory - New Mexico, U.S.A.

23. ASME Boiler and Pressure Vessel Code - Section III - Subsection NE - Class MC components - 1974 Edition.

24. ASME Boiler and Pressure Vessel Code - Section II - Material Specifications, Part A, Ferrous - 1974 Edition.

25. J. S. WATSON, "Heat Transfer from Spent Fuels During Shipping : A Proposed Method for Predicting Temperature Distribution in Fuel Bundles and Comparison with Experimental Data" - ORNL - 3439.

26. Royes SALMON - "A Computer Code (CDC 1604 A or IBM 7090) for Calculating the Cost of Shipping Spent Reactor Fuels as a Function of Burn-up, Specific Power, Cooling Time, Fuel Composition, and Other Variables" - ORNL - 3648 - August 1964.

27. Y.S. TOULOUKIAN, "Thermophysical Properties of Matter", Vol. 7, p. 1217.

28. M. LABROUSSE and J. REMY, "Réalisation des Epreuves Mécaniques et Thermiques", pp.161-175. Tests on Transport Packaging for Radioactive Materials, Proceedings of a Seminar, Vienna 8-12, February 1971 - IAEA Vienne 1971.

29. M.E. ALPER - "Environmental and Physical Effects on The Response of Balsa Wood as an Energy Dissipator" . Jet Propulsion Laboratory - California Institute of Technology - Pasadena, California June 15, 1966. Technical Report n° 32-944.

30. Note CEA - SEC n°68/181

31. A. HOFFMAN - F. JEANPIERRE - "Code Multigroup de Résolution de l'Equation de Transport pour les Neutrons Rapides et Thermiques" - Note CEA N - 1610.

32. Reactivity and Neutron Flux Studies in Multiregion Loaded Cores - WCAP - 1433 - June 1961.

33. W. HOFMANN - Lead and Lead Alloys - Properties and Technology - Lead Development Association - LONDON 1970.

34. "Multigroup Reactor Lattice Studies"(USEAC Contract AT (30-1)) - 276 - WACP 1412.

35. J. T. THOMAS - "Some Effects of Interposed Moderation on Array Criticality" - Y - CDC - Y - 12 Plant.

36. H. G. CLARKE, "Experimental Studies of Cask Impact Resistance" - Proceedings International Symposium for Packaging and Transportation of Radioactive Materials, January 12-15, 1965 . Albuquerque, New Mexico, SC - RR - 65 - 98, TID 4500 (41st Edition).

37. S. WILLIAMSON - "Application of Impact testing to Irradiated Fuel Flasks" IAEA - Tests on Transport Packaging for Radioactive Material - Vienna 1971.

38. Report on the Implications of the Tests Requirements for Type B Packagings and a Study of Practical Solutions; TRANSNUCLEAIRE, EURATOM Contract NR 024-65-E.C.I.C.

39. Quarterly Progress Report n° 7.- May 1969 - GEAP 10079.

40. S. TIMOSHENKO, Résistance des Matériaux, Première et Deuxième Parties - DUNOD - PARIS - 1968.

41. W. de L.M. MESSENGER - Tests for Integrity of Containment of Large Radioactive Material Packages - IAEA - Tests on Transport Packaging for Radioactive Materials - Vienna 1971.

42. HARRIS and CREDE - Shock and Vibration Handbook - MAC-GRAWHILL, 1961.

43. Note CEA-N 1645.
MORET - "Un Programme Monte Carlo de Calcul Rapide de Coefficients de Multiplication effectifs de Milieux Fissiles", J. MORET-BAILLY, G. POULLOT, J.R. TEILLET - CEN-SACLAY, Août 1973.

44. J.T. FOLEY and M.B. GENS - "Shock and Vibration Measurements during Normal Rail and Truck Transport, CONF. 710801, Vol. 2, pp. 905-933.

45. Advisory Material for the Application of the IAEA Transport Regulations. IAEA, Vienne 1973.

46. "Strength and related properties of balsa and quipo woods" Army - Navy - Civil Comittee on Aircraft Design Criteria - N° 1511 - November 1955.

47. " Standard Handbook for Mechanical Engineers" - MARKS, 7th edition, Page 11-77, Table 1.

48. TN-8 and TN-9 Safety Analysis Report, Addendum for the TN-8L Packaging, E-2362, Revision 1, dated June 16, 1981 (Applicaion date June 17, 1981).

49. TN-8 and TN-9 Safety Analysis Report, Second Addendum for the TN-8 and TN-8L Packagings, E-3508, Revision 1, dated April 26, 1983. (Application date May 3, 1983).

50. Transnuclear, Inc. letter, E-4800 from K. Goldmann to C. MacDonald, USNRC, dated April 27, 1984.

51. TN-8 and TN-9 Safety Analysis Report, First Addendum for the TN-9 Packaging, E-4943, dated June 26, 1984.

52. TN-8 and TN-9 Safety Analysis Report, Second Addendum for the TN-9 Packaging, E-5038, Revision 2, dated September 13, 1984.

53. TN-8 and TN-9 Safety Analysis Report, Third Addendum for the TN-9 Packaging, E-5075, Revision 0, dated July 31, 1984.

54. TN-8 and TN-9 Safety Analysis Report, Fourth Addendum for the TN-9 Packaging, E-6048, Revision 0, dated April 29, 1985.

55. Transnuclear, Inc. letter E-6195, K. Goldmann to C. MacDonald, USNRC, dated April 1, 1985.

56. Transnuclear, Inc. letter E-5972, K. Goldmann to C. MacDonald, USNRC, dated February 25, 1985.

57. Transnuclear, Inc. letter E-7681, K. Goldmann to C. MacDonald, USNRC, dated December 27, 1985.

58. TN-8/8L/9 Safety Analysis Report, Addendum for TN-8/8L Packagings, Stainless Steel Clad PWR Fuel Assemblies up to 4.0 wt. % U235 and Bundles of Fuel Rods, E-8839, Revision 2 dated May 15, 1987.

59. Transnuclear, Inc. Application, TN-8, TN-8L and TN-9, Safety Analysis Report, E-2040, Revision 11, dated February 14, 1990

60. Addendum for TN-8/8L Packagings, Configuration X Lid, E-7726, Revision 1, dated April 30, 1986.

61. Transnuclear, Inc. letter, E-7948, from Kurt Goldmann to C. MacDonald, USNRC, dated March 11, 1986.

62. Transnuclear, Inc. letter, E-10379 from D. Nolan to C. MacDonald, USNRC, dated August 19, 1988.

63. Transnuclear, Inc. letter, E-11429 from D. Nolan to C. MacDonald, USNRC, dated February 14, 1990.

64. Bell, "ORIGEN - The ORNL Isotope Generation and Depletion Code", ORNL-4628, 1973.

65. "Extended Fuel Burnup Demonstration Program Topical Report - Transport Considerations for Transnuclear Casks" DOE/ET 34014-11, 1983.

66. Croff, et al, "Revised Uranium- Plutonium Cycle PWR and BWR Models for the ORIGEN Computer Code", ORNL/TN-6051, 1978.

67. Hellman, "B&W Mark B Series Fuel Assembly and Core Control Component Assembly Descriptions for Spent Fuel Shipping and Reprocessing", Rev. 2, 1972.

68. DELETED.

69. Jaeger, ed., Engineering Compendium on Radiation Shielding, Springer Venlag, Berlin, 1968.

70. Chilton, Shultis, and Faw, Principles of Radiation Shielding, Prentiss-Hall, Englewood Cliffs, NJ, 1984.

71. SCALE - "A Modular Code System for Performing Standardized Computer Analyses for Licensing Evaluation", Oak Ridge National Laboratory, NUREG/CR-0200.

72. "Domestic Light Water Reactor Fuel Design Evolution", September, 1981, DOE/ET/47912-3, Volume 3, Table 4.2.

73. Bierman, S.R., et.al., "Critical Separation Between Subcritical Clusters of 2.35 wt. % U235 Enriched UO2 Rods in Water with Fixed Neutron Poisons," PNL-2438, Battelle Pacific North West Laboratories, Oct. 1979.

74. Bierman, et.al., "Criticality Experiments with Subcritical Clusters of 2.35 wt. % and 4.29 wt. % 235 U Enriched UO2 Rods in Water with Uranium or Lead Reflecting Walls," NUREG/CR-0796, April, 1979.

THIS PAGE IS AN OVERSIZED DRAWING OR FIGURE,

THAT CAN BE VIEWED AT THE RECORD TITLED: DWG. NO. 9317-01 TN8 PACKAGING WITHIN THIS PACKAGE...OR, BY SEARCHING USING THE DRAWING NUMBER: 9317-01

NOTE: Because of this page's large file size, it may be more convenient to copy the file to a local drive and use the Imaging (Wang) viewer, which can be accessed from the Programs/Accessories menu.

THIS PAGE IS AN OVERSIZED DRAWING OR FIGURE,

THAT CAN BE VIEWED AT THE RECORD TITLED: DWG. NO. 9317-138 TN8L PACKAGING WITHIN THIS PACKAGE...OR, BY SEARCHING USING THE DRAWING NUMBER: 9317-138

NOTE: Because of this page's large file size, it may be more convenient to copy the file to a local drive and use the Imaging (Wang) viewer, which can be accessed from the Programs/Accessories menu.

THIS PAGE IS AN OVERSIZED DRAWING OR FIGURE,

THAT CAN BE VIEWED AT THE RECORD TITLED: DWG. NO. 9317-03 TN9 PACKAGING WITHIN THIS PACKAGE...OR, BY SEARCHING USING THE DRAWING NUMBER: 9317-03

NOTE: Because of this page's large file size, it may be more convenient to copy the file to a local drive and use the Imaging (Wang) viewer, which can be accessed from the Programs/Accessories menu.

THIS PAGE IS AN OVERSIZED DRAWING OR FIGURE,

THAT CAN BE VIEWED AT THE RECORD TITLED: DWG. NO. 9040-500-1, REV. 1 TN-8/8L PACKAGING CONFIGURATION X LID TOP VIEW WITHIN THIS PACKAGE...OR, BY SEARCHING USING THE DRAWING NUMBER: 9040-500-1, REV. 1

NOTE: Because of this page's large file size, it may be more convenient to copy the file to a local drive and use the Imaging (Wang) viewer, which can be accessed from the Programs/Accessories menu.

THIS PAGE IS AN OVERSIZED DRAWING OR FIGURE,

THAT CAN BE VIEWED AT THE RECORD TITLED: DWG. NO. 9040-500-2, REV. 1 TN-8L PACKAGING CONFIGURATION X LID SECTIONAL VIEWS WITHIN THIS PACKAGE...OR, BY SEARCHING USING THE DRAWING NUMBER: 9040-500-2, REV. 1

NOTE: Because of this page's large file size, it may be more convenient to copy the file to a local drive and use the Imaging (Wang) viewer, which can be accessed from the Programs/Accessories menu.