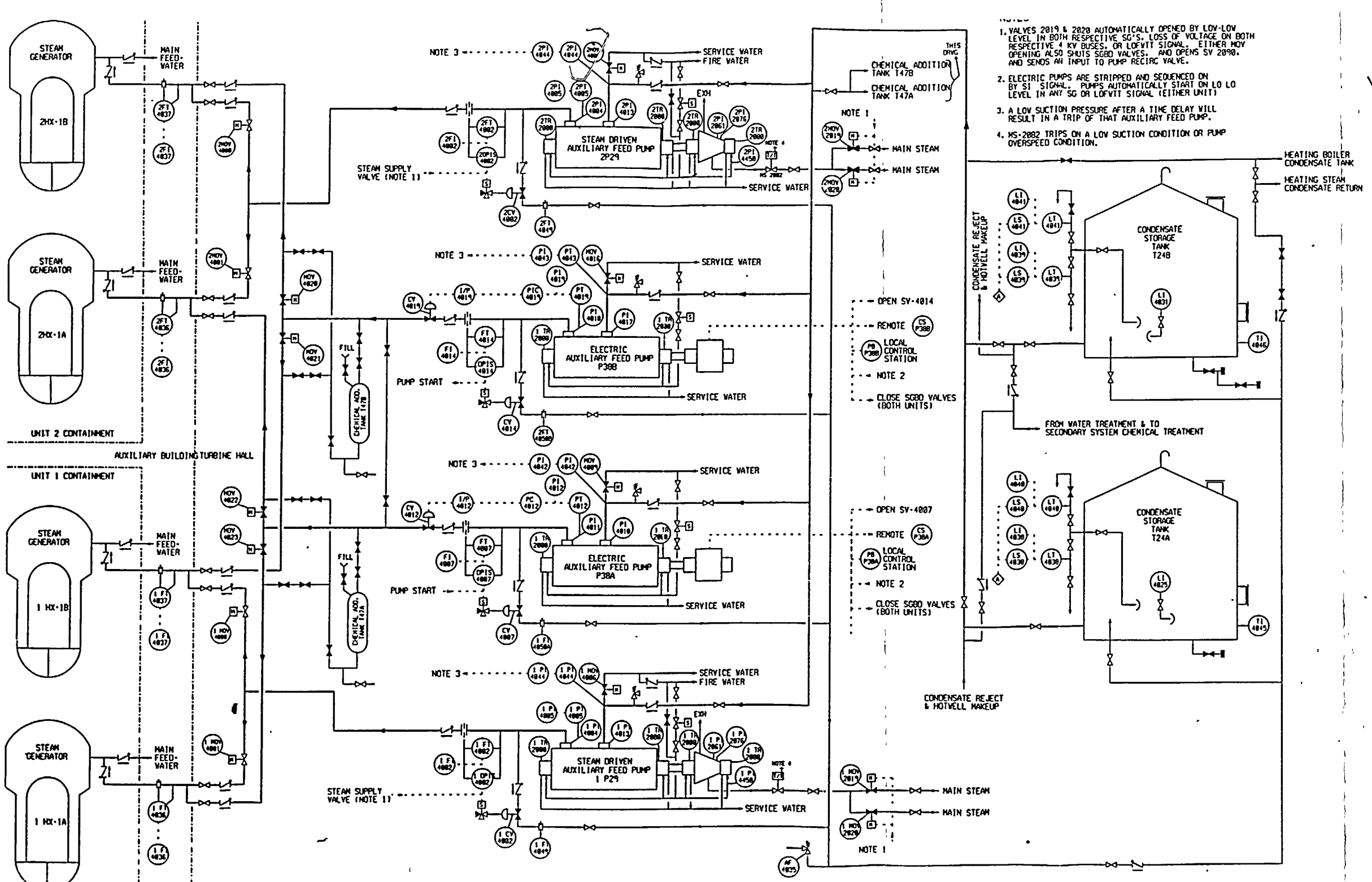


NOTES

1. VALVES 2019 & 2020 AUTOMATICALLY OPENED BY LOV-LOW LEVEL IN BOTH RESPECTIVE SG'S. LOSS OF VOLTAGE ON BOTH RESPECTIVE 4 KV BUSES. OR LOFVTT SIGNAL. EITHER MOV OPENING ALSO SHUTS SGBD VALVES. AND OPENS SV 2090. AND SENDS AN INPUT TO PUMP RECIRC VALVE.
2. ELECTRIC PUMPS ARE STRIPPED AND SEQUENCED ON BY SI SIGNAL. PUMPS AUTOMATICALLY START ON LO LO LEVEL IN ANY SG OR LOFVTT SIGNAL (EITHER UNIT)
3. A LOV SUCTION PRESSURE AFTER A TIME DELAY WILL RESULT IN A TRIP OF THAT AUXILIARY FEED PUMP.
4. MS-2082 TRIPS ON A LOV SUCTION CONDITION OR PUMP OVERSPEED CONDITION.

5.5.3-1
H Date 12/14/00
Chg. No.

A/101

FOR INFORMATION ONLY

AUXILIARY FEEDWATER SYSTEM
FIGURE 11.4