POINT BEACH NUCLEAR PLANT
MODIFICATION REQUEST

MR Number 88-099 WBH

NOTE: Block numbers on this form correspond to paragraph numbers of Procedure QP 3-1. The use of black ink is required.

2.6 MODIFICATION REQUEST INITIATION

☐ UNIT 1 ☐ UNIT 2 ☒ COMMON FACILITIES

System: Aux Feedwater Location: Aux Feed Pump Room

Print Nos. M-217

Reason for Modification (Concise description of actual problem. List applicable reference documents):

☐ Plant Betterment ☐ Safety Issue ☒ Regulatory Requirement ☐ ALARA

☐ Other (Specify)

The existing minimum recirculation flowrate for each AFW pump is 30 gpm, this equates to ~8% of the BEP for the electric driven AFW pumps and ~6% of the BEP for the turbine driven AFW pumps. It is now recognized that to prevent inlet flow instabilities in centrifugal pumps that may lead to pump damage the minimum flow rate should be ~25% to 50% of the BEP. In response to NRC Bulletin 88-04 a commitment was made to increase the minimum recirculation flowrate of the AFW pumps. The recommended flow rate will be provided by Byron Jackson, pump manufacturer.

Proposed Change (Include sketches, effects on other components/systems, alternate approaches, installation/acceptance/completion date, if known.) Attach additional pages if needed.

Modify the AFW pump mini-recirc lines to provide the recommended flow rates.

Information in this record was deleted in accordance with the Freedom of Information Act, exemptions 4
FOIA-2003-0094

Initiated By John A. Palmer Date 7/5/88

2.7 GROUP HEAD/SUPERVISOR Comments (include basis for due dates)

INITIAL EFFORT SHOULD INCLUDE ENSURING NRC HAS ACCEPTED 88-04 RESOLUTION RECOMMENDATIONS.

Priority: 1☐ 2☒ 3☐ 4☐ Required Due Date

☒ Recommended ☐ Not Recommended By W B Jammy Date 7/5/88

2.8 MODIFICATION ENGINEER

10CFR50.59 Review Required

☒ Yes ☐ No Initials WBJ

QA STATUS: Q/S

QA SCOPE

MICROFILMED

MAR 3 1992

Form QP 3-1.
Rev. 1

POINT BEACH NUCLEAR PLANT
MODIFICATION REQUEST

MR Number 88-099

Page 2 of 6

2.9 EQRS

QA Status: ☒ QA-scope ☐ Non QA-scope

Clarification: SEE ATTACHED QA CLARIFICATION

~~RECIRC LINE PIPING AND COMPONENTS TO BE QA UP TO AND INCLUDING RECIRC ISOLATION VALVES (1AF-[illegible], [illegible]-27, AF-40, 2AF-53). FIRST RESTRAINT DOWNSTREAM OF RECIRC ISOLATION VALVES TO BE QA. PIPING DOWNSTREAM OF RECIRC ISOLATION VALVES NEED NOT BE QA.~~

Signature A Yellen Date 10/28/89

2.10 SUPERVISOR - ADMINISTRATIVE SERVICES:

Charge Account Number(s): ~~040-530-23XX34001~~ JJM
#91-530-23XX36517 JAP

2.11 MANAGER - PBNP Preliminary Review (Also indicate required approvals in Block 2.16)

☒ Proposal Satisfactory ☐ Cancelled

Engineering Evaluation (includes conceptual design):

a. ☐ EQRS
b. ☐ NPERS
c. ☒ NSEAS
d. ☐ Other in plant (specify) _____
e. ☐ Contractor (specify) _____
Directed by a, b, c, d (circle appropriate)
f. ☐ Not required

Comments: IDENTIFY CHANGES THAT NEED TO BE MADE TO ACCOMODATE THE INCREASED FLOW.

Assigned Responsible Engineer ~~IPA~~ JAP Liaison Engineer ~~JAP~~ HLH

Signature [signature] Don JJZ Date 2/12/88

2.12 MODIFICATION ENGINEER Recommendations

(Also designate group engineering reviews in Block 2.14)

2.13 ENGINEERING EVALUATION/CONCEPTUAL DESIGN

See Form QP 3-1.4 if required

2.14 GROUP ENGINEERING EVALUATION REVIEWS

☒ M&C MJH ☐ C/HP ____ ☐ RE ____ ☐ NPERS ____ ☐ Other (spec) ____

☒ OPS [initials] ☒ I&C [initials] ☒ [illegible] ☐ NSEAS ____ ☐ Not Required

Review Comments/Training Scope:

See attached comments 2/13/90

Scope of Training:

PLANT STATUS UPDATE - OPERATIONS PERSONNEL & DTA'S

Mod. Eng. Signature WB Fromm Date 7/5/88

2.15 MODIFICATION ENGINEER - Review Routing PER 10CFR50.59

NRC Approval Required: ☐ No ☐ Yes (Contact NE)

2.16 REVIEWS AND APPROVALS

		Approved	Disapproved
NO ☐ NPERS Review by _____	Date _____	☐	☐
YES ☒ NSEAS Review by [signature]	Date 10/24/89	☒	☐
YES ☒ Manager's Supervisory Staff Review MSSM No. 90-13 by [signature] (for MSS)	Date 07/10/90	☒	☐
NO ☐ Other Reviews (specify) _____			
by _____	Date _____	☐	☐
by _____	Date _____	☐	☐
by _____	Date _____	☐	☐
by _____	Date _____	☐	☐

2.17 MANAGER - PBNP Approval

☒ Reviewed & Priority Satisfactory ☐ Reviewed & Changed Priority to _____

Responsibilities:

Final Design: NSEAS

Installation: M&C

Acceptance: OPS

Final Design Reviews (Manager - PBNP) to designate in Block 2.21; as a minimum should include groups responsible for operability and maintainability)

Scope of Training: ☒ Concur ☐ Change (Specify) _____

Modification Request ☒ Approved ☐ Disapproved [signature]

Date 07/10/90

2.18 DISTRIBUTION

Completed by MLB Date 7/17/90

2.19 RESPONSIBLE ENGINEER - Review

Establish schedule for completion of modification and related requirements. Identify design packages associated with this modification.

Modification Affects the Simulator: ☒ Yes ☐ No

Responsible Engineer Julie Pederson POSSIBLY Date 3-27-91

Copies to [illegible]

UNITED STATES
NUCLEAR REGULATORY COMMISSION
WASHINGTON, D. C. 20555

May 26, 1989

N.C. FILE COPY
~~A1.3.1~~
P2NRC2.4 88-04

RECEIVED MAY 30 1989

Docket Nos. 50-266
and 50-301

Mr. C. W. Fay, Vice President
Nuclear Power Department
Wisconsin Electric Power Company
231 W. Michigan Street, Room 308
Milwaukee, Wisconsin 53201

Dear Mr. Fay:

SUBJECT: RESPONSE TO NRC BULLETIN 88-04 (TAC NOS. 69956 AND 69957)

On May 5, 1988, the NRC staff issued NRC Bulletin 88-04, "Potential Safety-Related Pump Loss." The bulletin requested the evaluation of all safety-related pumps for 1) pump-to-pump interaction during mini-flow operation that could result in dead-heading of one or more of the pumps, and 2) the adequacy of the minimum flow bypass lines with respect to damage resulting from operation and testing in the minimum flow mode. The bulletin also requested that within 60 days of receipt of the bulletin, licensees provide a written response that (a) summarizes the problems and the systems affected, (b) identifies the short-term and long-term modifications to plant operating procedures or hardware that have been or are being implemented to ensure safe plant operations, (c) identifies an appropriate schedule for long-term resolution of this and/or other significant problems that are identified as a result of this bulletin, and (d) provides justification for continued operation particularly with regard to General Design Criterion 35 of Appendix A to Title 10 of the Code of Federal Regulations (10 CFR Part 50), "Emergency Core Cooling" and 10 CFR 50.46, "Acceptance Criteria for Emergency Core Cooling Systems for Light Water Nuclear Power Reactors." Additionally, the staff requested that within 30 days of completion of the long-term resolution actions, licensees provide a written response describing the actions taken.

By letter dated June 28, 1988, you responded to Bulletin 88-04. Your response provided the information requested in a, b, c, and d above. No additional information is required at this time. The staff notes

that the necessary modifications are scheduled to be completed during the Point Beach Units 1 and 2 refueling outages in 1991. The staff awaits your description of the long-term resolution actions, which is due within 30 days of completion of these actions.

Sincerely,

Warren H. Swenson

Warren H. Swenson, Project Manager
Project Directorate III-3
Division of Reactor Projects - III,
IV, V and Special Projects
Office of Nuclear Reactor Regulation

cc: See next page

Mr. C. W. Fay
Wisconsin Electric Power Company

Point Beach Nuclear Plant
Units 1 and 2

cc:
Mr. Bruce Churchill, Esq.
Shaw, Pittman, Potts and Trowbridge
2300 N Street, N.W.
Washington, DC 20037

Mr. James J. Zach, Manager
Point Beach Nuclear Plant
Wisconsin Electric Power Company
6610 Nuclear Road
Two Rivers, Wisconsin 54241

Town Chairman
Town of Two Creeks
Route 3
Two Rivers, Wisconsin 54241

Chairman
Public Service Commission
of Wisconsin
Hills Farms State Office Building
Madison, Wisconsin 53702

Regional Administrator, Region III
U.S. Nuclear Regulatory Commission
Office of Executive Director
for Operations
799 Roosevelt Road
Glen Ellyn, Illinois 60137

Resident Inspector's Office
U.S. Nuclear Regulatory Commission
6612 Nuclear Road
Two Rivers, Wisconsin 54241

CHRONO COPY
Filed In:
P2NRC24
88-04

Wisconsin Electric POWER COMPANY
231 W. Michigan, PO Box 2046, Milwaukee, WI 53201
(414) 221-2345

VPNPD-88-335
NRC-88-062

June 28, 1988

U. S. NUCLEAR REGULATORY COMMISSION
Document Control Desk
Mail Station P1-137
Washington, D. C. 20555

Gentlemen:

DOCKETS 50-266 AND 50-301
NRC BULLETIN 88-04
POTENTIAL SAFETY-RELATED PUMP LOSS
POINT BEACH NUCLEAR PLANT

This is in response to NRC Bulletin 88-04 regarding the possible loss of function of safety-related pumps due to inadequate miniflow design. The systems at Point Beach Nuclear Plant affected by this Bulletin are the Residual Heat Removal (RHR) Systems, the Safety Injection (SI) Systems, and the Auxiliary Feedwater (AFW) Systems. Each system was evaluated with respect to the concern of potential pump dead-heading and inadequately installed miniflow capacity.

Our responses to specific actions requested in NRC Bulletin 88-04 are provided below.

4a. Summary of Problems and Systems Affected

RHR System

Each RHR pump is provided with an individual orificed miniflow line. This line provides a flow path from each reactor vessel injection line back to the associated pump's suction. This arrangement precludes pump-to-pump interaction when the RHR pumps are operated on miniflow. The RHR pumps, therefore, do not have the potential for a pump being dead-headed while both pumps are operating on miniflow.

The installed miniflow orifices were supplied by the RHR pump manufacturer, Pacific Pumps. The orifices are sized to provide a flow rate of 150 gpm. The flow rate of 150 gpm was based solely on pumped fluid temperature rise considerations. Pacific Pumps now recommends a minimum flow rate of approximately 30% of the best efficiency point or 520 gpm for continuous operation of the RHR

pumps. For intermittent operation for pump starting, stopping, changeover, etc., the recommended flow rate is 15% of the best efficiency point or 260 gpm. These flow rates are based on preventing the flow instabilities associated with low-flow operation.

The miniflow rates of the RHR pumps were ultrasonically measured at approximately 160 to 165 gpm. At these flow rates, Pacific Pumps stated that the RHR pumps could be operated for approximately thirty minutes without incurring damage.

The majority of the operating history of the RHR pumps on miniflow is associated with the performance of the required inservice testing of the pumps. The inservice test data since 1985 have been reviewed to determine the length of time the RHR pumps were operated on miniflow and what effects, if any, there were on pump operation and maintenance. The average time that an RHR pump was operated on miniflow during this period was 40.2 minutes per test, with a maximum period of 155 minutes. Since 1985 there has been no increase in required pump maintenance. The maintenance that was required was primarily associated with seal leakage. It should be noted that the seal leakage was detected during the performance of the inservice testing and was corrected prior to jeopardizing pump operability.

SI System

Each SI pump has an orificed miniflow line from the pump discharge to the unit-specific SI test line and back to the refueling water storage tank. Each pump is provided with an individual miniflow orifice upstream of the connection to the common SI test line. Since both pumps utilize the common SI test line for recirculation back to the RWST, the SI pumps are operated in parallel while on miniflow. In a letter dated November 30, 1987, the SI system designer, Westinghouse, stated that this orificed design reduces the pressure at the entrance to the common miniflow line to a value low enough that a weaker pump will not be dead-headed. Essentially, an orifice in the individual miniflow line desensitizes the system to the strong/weak pump concerns. This was verified on the Unit 2 SI pumps during testing on November 6, 1987. Miniflow rates for the two SI pumps were ultrasonically measured with each SI pump operated individually and with both pumps operating simultaneously. The measured miniflow rates for either case was approximately 110 gpm

for each pump. There was no discernible change in measured flow rates with the pumps operating individually or in parallel. Westinghouse's conclusion that the orifices desensitize the system to flow instability is, therefore, correct; and the potential for dead-heading an SI pump on miniflow does not exist.

The installed miniflow orifices were supplied by the SI pump manufacturer, Byron Jackson. The orifices were sized to provide a miniflow of 70 gpm. The flow rate of 70 gpm was based solely on pumped fluid temperature rise considerations. Byron Jackson now recommends a minimum flow rate of approximately 32.5% of the best efficiency point or 225 gpm for continuous operation of the SI pumps. This flow rate is based on preventing the flow instabilities associated with low-flow operation.

Byron Jackson stated that the SI pumps could be operated for approximately 15 minutes at 70 gpm and for approximately 25 minutes at 110 gpm without incurring pump damage.

The majority of the operating history of the SI pumps on miniflow is associated with the performance of the required inservice testing of the pumps. The inservice test data since 1985 were reviewed to determine the length of time the SI pumps were operated on miniflow and what effects, if any, there were on pump operation and maintenance. The average time that an SI pump was operated on miniflow during this period was 42 minutes per test, with a maximum period of 189 minutes. During this time period, there has been no increase in required pump maintenance. The maintenance that was required was mostly associated with seal leakage. It should be noted that the seal leakage was detected during the performance of the inservice testing and was corrected prior to jeopardizing pump operability.

AFW System

Each AFW pump has an orificed miniflow line from the pump discharge to a common return line back to the condensate storage tanks. Each miniflow line has an air-operated isolation valve that isolates the miniflow line when pump flow to the steam generators increases above 75 gpm. Miniflow is reestablished when flow to the steam generators decreases to 30 gpm. Each pump is provided with an individual miniflow flow orifice upstream of the connection to the common line. This arrangement results in the potential for the AFW pumps to be operated in

parallel while on miniflow; however, as was the case with the SI pumps, the existence of the individual pump miniflow orifices eliminates the potential for dead-heading an AFW pump while operating in miniflow.

The installed miniflow orifices were supplied by the AFW pump manufacturer, Byron Jackson. The orifices were sized to provide a miniflow of 30 gpm. The flow rate of 30 gpm was based solely on pumped fluid temperature rise considerations. Byron Jackson has been requested to provide a revised recommended miniflow rate for the AFW pumps, taking into consideration low-flow instabilities. Due to the large demands placed on the Byron Jackson engineering department by NRC Bulletin 88-04, this information is, however, not yet available. It is estimated that the new recommended miniflow rates will be approximately 120 gpm for the motor-driven AFW pumps and 175 gpm on the steam-driven AFW pumps.

The majority of the operating history of the AFW pumps on miniflow is associated with the performance of the required inservice testing of the pumps. The inservice test data since 1985 were reviewed to determine the length of time the AFW pumps were operated on miniflow and what effects, if any, there were on pump operation and maintenance. The average time that an AFW pump was operated on miniflow during this period was 40 minutes per test, with a maximum period of 237 minutes. During this time period, there has been no increase in required pump maintenance for the electric-driven AFW pumps. The maintenance that was required was primarily associated with seal leakage problems. It should be noted that the seal leakage was detected during the performance of the inservice testing and was corrected prior to jeopardizing pump operability. The steam-driven AFW pumps did require increased maintenance; however, this was due to a problem with the turbine thrust bearing and was not associated with low-flow instabilities. This problem was corrected under Modification Requests 87-097 (Unit 1) and 87-098 (Unit 2).

4b. <u>Short-Term and Long-Term Modifications to Plant Operating Procedures on Hardware</u>

<u>Short-Term</u>

An Operations Special Order will be issued by July 15, 1988, to inform the operators of the problems associated with operating the affected pumps on miniflow and the

potential for pump degradation associated with extended miniflow operations. The intent is to minimize the amount of time the affected pumps are operated with flow rates below the manufacturer's recommendations.

Long-Term

The RHR and SI systems will be modified to provide the capability to perform the required inservice testing at flows equal to, or greater than, the minimum flows now recommended by the pump manufacturers. Since the majority of pump operations associated with miniflow conditions is related to the inservice testing program, the installation of higher capacity test lines will significantly reduce the cumulative pump operation with less than recommended flow rates. Following these modifications, the RHR and SI pumps will be operated in the low-flow condition only upon the receipt of a safety injection signal where primary system pressure remains above pump shut-off head. In view of the infrequent occurrences of automatic safety injection at Point Beach, pump operating history, mode of pump degradation, and the inservice testing program, this is considered acceptable.

The miniflow lines for the AFW pumps will be modified to increase the miniflow capacities to the flow rates recommended by the pump manufacturer. The modified arrangement will be designed to ensure that the potential for pump-to-pump interaction during miniflow operation is not created.

As you know, Wisconsin Electric filed License Amendment Requests 42 and 58 on February 17, 1977 and November 27, 1978 for Point Beach Nuclear Plants, Units 1 and 2, respectively, for Technical Specification changes necessitated by the revised inservice testing requirements, as required by 10 CFR 50.55a. To date, only certain portions of these proposed amendments have been reviewed and approved by the NRC. If the requirement to test the RHR, SI, and AFW pumps on a monthly basis is revised to a quarterly test as required by our inservice test program, and as requested in these License Amendment Requests, the cumulative operation and potential degradation of the affected pumps on miniflow could be reduced by approximately 60%. Thus, it is requested that NRC's review and approval of the IST programs and associated Technical Specification changes be expedited.

4c. Long-Term Resolution Schedule

The modifications to the RHR, SI, and AFW systems discussed above are scheduled to be completed during the units' refueling outages in 1991.

4d. Justification for Continued Operation

The justification for continued operation of the affected pumps with the existing miniflow capacities until the planned modifications are completed is based on pump operating history, degradation mode, administrative minimization of miniflow operation, and the inservice test program. Miniflow is needed for two reasons: pumped fluid temperature control and the new issue of pump suction flow stability. As stated previously, each of the pumps' miniflow lines was designed and adequately sized for the fluid temperature control concerns. Our measurements indicate that the existing flow is adequate for this consideration.

As stated earlier, the majority of miniflow operation is associated with the performance of the inservice test program. The data accumulated through the inservice test program demonstrate that there has not been a history of significant pump degradation and that pump performance has remained relatively constant. The pumps have also been operated during inservice testing for longer periods than those recently recommended by the manufacturers without incurring any noticeable damage or degradation. There have been approximately 150 to 200 tests run on each pump in its history. Until the modifications are completed, each pump will have to be operated on miniflow for testing another 20 to 30 times, or less if the pending inservice testing Technical Specification change request is approved. By limiting the continuous miniflow operation of the pumps to the time periods recommended by the manufacturers, the potential for pump degradation and damage will also be minimized.

As you know, pump degradation due to operation with low-flow rates is not a catastrophic failure mode but occurs over a period of time. It leads to premature failures of packing, seals, and rotating element components as a result of higher vibration during low-flow testing. The purpose of the inservice test program is to monitor the subject pumps on a periodic basis to verify pump operability and to determine if any degradation in pump performance is occurring. This

serves to detect the beginning of any potential problems with the pumps and to initiate corrective action prior to pump operation being affected. The inservice testing program at Point Beach ensures that these pumps are capable of operating as designed when required to perform their safety-related function.

Please contact us if you have any questions regarding our response.

Very truly yours,

C. W. Fay
Vice President
Nuclear Power

dpg

Subscribed and sworn to before me
this 28th day of June, 1988.

Notary Public, State of Wisconsin
My Commission expires 5-27-90.

Copies to NRC Resident Inspector
NRC Regional Administrator, Region III

Blind copies to G. M. Krieser
E. J. Lipke
R. A. Newton
J. J. Zach

BWIP International, Inc.

Byron Jackson Products

United Centrifugal Pumps

Pump Division

7 August 1989

DOCUMENT RETENTION

LIFETIME _____ YRS

NON-PERMANENT _____ YRS

FILE NO. A 16.1

Wisconsin Electric Power Company
P.O. Box 2046
Milwaukee, Wisconsin 53201

Attention: Mr. R. A. Newton
General Superintendent - NSEAS

Attention: Mr. J. P. Austin

Subject: Wisconsin Electric P.O. No. 139764
Byron Jackson Job No. 891-C-2264.21
Minimum Flow Analysis

Gentlemen:

Thank you for your continued interest in Byron Jackson pumps. We are pleased to present the following report. This report concerns information regarding minimum flow rates for auxiliary feed water pumps at the Point Beach Nuclear Plant. This data was analyzed in accordance with minimum flow requirements as outlined in NRC bulletin 88-04.

In reviewing the files, it was noted that there are four (4) auxiliary feed pumps at the Point Beach Nuclear Station. While these pumps are identical in model number, they are slightly different. S/N 691-S-1028 and 1029 are designed for 400 GPM at 2754 feet. S/N 691-S-1030 & 1031 are also designed for 2754 feet of TDH but at 200 GPM. Both pumps used the same 1st stage hydraulics, but with a different series configuration.

The following guide lines should be followed in order to avoid damage due to operation at reduced flow rate:

S/N 691-S-1028/29:

Accumulated Time (Hrs/Year)	Min. Flow (GPM)	% B.E.P.
1500	210	42
60-1500	130	26
60	100	20

RECEIVED
NUCLEAR ENGINEERING AUG - 9 1989

S/N 691-S-1030/31:

Accumulated Time (Hrs/Year)	Min. Flow (GPM)	% B.E.P.
1500	105	28
60-1500	75	20
60	70	19

Operation at 30 GPM should be avoided for both pumps.

This concludes the work requisition on purchase order 139764. We trust that this information is satisfactory. If you require additional information, please do not hesitate to contact me.

Very truly yours,

BW/IP INTERNATIONAL, INC.
PUMP DIVISION

W. Fred Grondhuis
Senior Sales Engineer

WFG/ss:WIEPCO7.ltr

CC: BW/IP International
Ms. Ruth Ellen Hawks - LAO

POINT BEACH NUCLEAR PLANT MODIFICATION REQUEST	MR NUMBER 88-099	Page 1 of 4

2.11 ENGINEERING EVALUATION/CONCEPTUAL DESIGN:

See attached.

PERFORMED BY [signature] DATE 2-5-90

APPROVED BY [signature] DATE 2-6-90

Form QP 3-1.4
Revision 2

ENGINEERING EVALUATION

NRC Bulletin 88-04, "Potential Safety-Related Pump Loss" identified two possible miniflow design concerns. The first concern involves the potential for the dead-heading of one or more pumps in safety-related systems that have a miniflow line common to two or more pumps or other piping configurations that do not preclude pump-to-pump interaction during miniflow operation. The second concern was whether or not the installed miniflow capacity is adequate to protect against a condition that has been described as hydraulic instability or impeller recirculation which occurs when pumps are operated at some point below the best efficiency point on their characteristic curves. These unsteady flow phenomena increase as the flow decreases below the best effi[illegible]cy point. Pump damage results from pump vibration, excessive forces on t[illegible]ller, and cavitation.

On June 28, 1988 (Ref. VPNPD-88-335, NRC-88-062) we responded to NRC Bulletin 88-04. Our response, as it applies to the Auxiliary Feedwater pumps (AFW), was that the parallel pump operation concern did not exist but that our mini-recirc lines are not adequately sized for inservice testing. Our response stated that the Auxiliary Feedwater system would be modified to provide the capability to perform the required inservice testing at flows equal to, or greater than, the minimum flows now recommended by the pump manufacturers. These new flows are 70 gpm for the motor driven pumps and 100 gpm for the steam driven pumps. (Manufacturer's Letter Attached to Mod.)

The NRC responded to our resolution of this issue in a letter dated May 26, 1989. (Letter attached)

Modification Request 88-099 was initiated to fulfill our commitment to the NRC to modify the recirc lines.

Conceptual Design

The Auxiliary Feedwater pumps mini-recirc lines are currently designed to provide 30 gpm of recirc flow to the condensate storage tanks (CST's). Each mini-recirc line has an air-operated isolation valve and flow orifice upstream of the common return line. The 2" mini-recirc lines are adequately sized for increasing the flow from 30 gpm to 70 or 100 gpm. The valve trim and flow orifice will be replaced with one that will accomodate increased flow. The setpoints for FT4007 and FT4014 will be adjusted to correct for the new flows. The increase in flow through the mini-recirc lines will not affect the operators ability to control flow. The pump discharge head curves are relatively flat so that when the mini-recirc valve opens the flow to the steam generators will not change significantly. A calculation will be provided in the final design to show this.

It is also recommended that the common return line for the AFW pump mini-recirc lines be instrumented with a flow indicator. Flow indication will provide assurance that the pumps are operated with sufficient flow on mini-recirc.

Ex 4

COST ESTIMATE

Option #1:	Mat'l Cost (ea.)	Labor (Man-Hours)	Total Mat'l Cost
4 Valve trim			
4 Flow orifice			
Engineering Costs (3 Man-Months)			
		GRAND TOTAL:	

Option #2:
(Option #1 with flow indication)

Flow indication:

2 flanges

Orifice plate

Electrical

Transmitter

Processing Piping

Engineering Costs (1 Man-week)

GRAND TOTAL:

POINT BEACH NUCLEAR PLANT MODIFICATION REQUEST	MR NUMBER 88-099	Page 2 of 4

2.11 ENGINEERING EVALUATION REVIEW SHEET

	OPTION 1	OPTION 2
a. Applicable codes and addenda.	B31.1	B31.1
b. Cost estimate.	~~12,366~~ JAP 24366	~~17148~~ JAP 29148
c. Availability of parts or equipment.	P.O. Required	P.O. Required
d. Improvement in plant reliability or efficiency.	Yes, will allow pump testing at Mfg. recommended flow rates	
e. Improvement in system or component function or maintainability.	No	No
f. Expected reduction or increase in personnel radiation exposure as a result of the modification (ALARA).	None	None
g. Personnel radiation exposure expected to be incurred in performing the modification.	None	None
h. Regulation or code which would make modification mandatory.	NRC Bulletin 88-04	NRC Bulletin 88-04
i. FSAR or Technical Specification change required should modification be implemented.	No	No
j. Environmental effects.	None	None
k. Specific scheduling problems; i.e., weather, lake conditions, plant conditions.	Outage Required	Outage Required
l. Deleterious affects or modification on plant systems and/or components.	None	None
m. Deleterious affects of modification on plant during implementation of modification.	No	No
n. Security aspects of modification during and following completion of modification.	None	None
o. Increased fire hazard or potential affects Appendix R safe shutdown equipment fire protection program.	None	None
p. Insurance carrier notification.	No	No
q. Seismic analysis.	No	No
r. Environmental qualification.	No	No
s. Missile protection.	No	No
t. Solid state vulnerability to RFI.	No	No
u. Potential plant flooding effects.	No	No
v. Future personnel requirements to support resulting configuration.	None	None
w. Effects on masonry walls.	None	None

NUCLEAR POWER DEPARTMENT
DOCUMENT REVIEW
CONTINUATION

Sheet ____ of ____

1 Document Title/Number/Revision/Date

MR 88-099

BLOCK 4 TO BE COMPLETED BY REVIEWING ORGANIZATION

4 Comments:

I recommend Option 2, to include recirc FIs. This will ~~no~~ allow us to do pump testing on recirc. We will need to do full flow CV tests but the duration of pump runs can be reduced because pump performance data need not be taken. LBS 2-12-90

Option #2 preferred as it provides positive HWR-recirc flow indication for analysis of pump performance and trending purpose. LJK 2-13-90

I agree with option #2 for same reasons as stated above.
T.G. 2/13/90
[illegible] 2/13/90

Conceptual design matrix FT 4007 & FT 4014, but also needs to include 1&2 FT 4002.
MJH
2/19/90

Can recirc flow increase be achieved by replacing orifice or valve trim, rather than both?
MJH 2/19/90

New flow instrumentation should of one of the same vendor types as presently used in plant.

7 Resolution:

Will be Included in final design

Copes Vulcan said it is possible, but that cavitation is likely. They are reviewing options/wear out times.

I&C will be contacted prior to instrument purchase.

MJH 2/19/90

Form QP 5-3.2
Rev. 1

INTERNAL CORRESPONDENCE

To J. J. Zach

Attention: Brad Fromm

From J A Porter (Resp Engineer)

Date 1-19-90

Subject **MODIFICATION REQUEST TRANSMITTAL**

Copy To NE File

☐ New MR(s) unnumbered for entry into the MR system per QP 3-1.
Unit(s) _____ System _____
Suggested Title: _____

☐ MR being returned to PBNP following review and/or approval.

MR Number	Section(s) Completed

☒ MR being returned for plant action.

MR Number	Sections(s) Requiring PBNP Action
88-099	2.14

☐ MR(s) for Completion and Filing.

MR Number		

☐ Comments: _____

Reviewed by: S Freiling

Transmittal Approved By: S Freiling for KAW

RECEIVED
FEB 8 1990
POINT BEACH

Form 3179 2-E
LOI # 704 299

INTERNAL CORRESPONDENCE

To J. J. Zach

Attention: Brad Fromm

From Jay Porter (Resp Engineer)

Date 6-29-90

Subject MODIFICATION REQUEST TRANSMITTAL

Copy To NE File

☐ New MR(s) unnumbered for entry into the MR system per QP 3-1.
Unit(s) _____ System _____
Suggested Title: _____

☐ MR being returned to PBNP following review and/or approval.

MR Number	Section(s) Completed

☒ MR being returned for plant action.

MR Number	Sections(s) Requiring PBNP Action
MR 88-099	2.16, 2.17, 2.18

☐ MR(s) for Completion and Filing.

MR Number		

☐ Comments: _____

Reviewed by: J. F. McDonnell Transmittal Approved By: [signature]

RECEIVED
JUL 6 1990
POINT BEACH

Form 3179 2-85
Lot # 704 2994

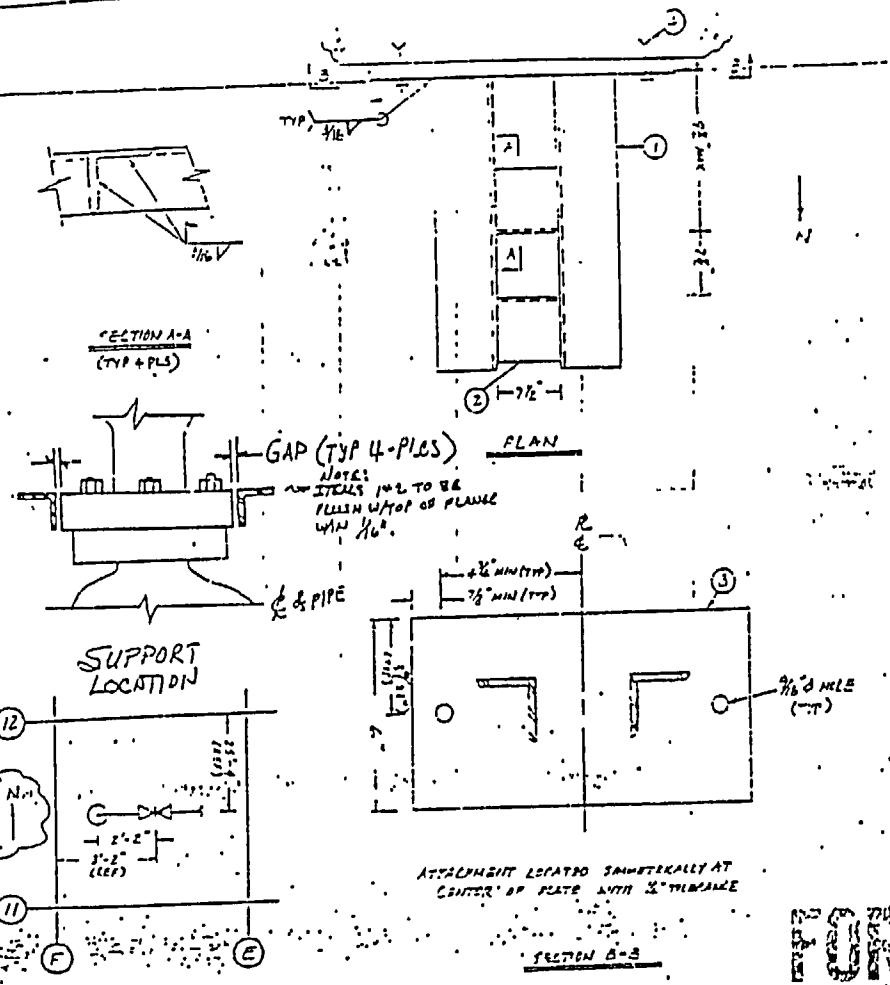

BILL OF MATERIAL

ITEM	QTY.	FIG. NO. / PART NO. / CALC. NO.	DESCRIPTION	WT. (LB.)	RATINGS (LB.) A OR B	C	D
1	2		L 2x2x1/2 x 1'-10" LG (A-36)				
2	2		L 2x2x1/2 x 7 1/2" LG (A-36)				
3	1		PL 1/2" x 6" x 1'-3 1/2" (A-36)				
4	2		1/2" ⌀ HILTI-KWIK I BOLT Lb = 5" MIN				
			TOTAL WT.				

SPECIAL INSTRUCTIONS: THE GAPS BETWEEN VALVE BODY AND FRAME ARE: 1/16" ALL AROUND (HORIZONTAL); 1/4" (VERTICAL)

SUPPORT RATING

FILE NO. : 100070.S

NODE POINT: 2425

NOTES:
1. THERE IS A 1/2" TOLERANCE ON ALL DIMENSIONS.
2. THE GAP DIMENSIONS SHALL BE 1/16" IN EACH DIRECTION WITH A TOLERANCE OF +0" / -1/16". NOTE THAT THE CUMULATIVE GAP IN ANY DIRECTION SHALL BE < 1/8".
4. THERE SHALL BE A 2 BOLT-DIAMETER TOLERANCE FOR THE LOCATION OF THE CEA BOLTS. INSTALL PER MSI 7.1 or equivalent.
5. CLEVIS, STOP & STEEL PIN (ITEM 3) SUBSTITUTED FOR ALL ITEMS PER FIELD DISCRETION.

ACC. NO. 100070S
ADDENDUM A TO REV. 01
ATTACHMENT 2
PAGE 2

FOR INFORMATION ONLY

TECHNICAL FILE INDEX:
MODIFICATION REQUEST:
HANGER NO. DB38-20010

COMPUTER GRAPHICS SYSTEM

MICROFILM NO.
C.G.S. FILE NO.
SCALE: NTS
PROJ. I.D. 31628
DRAWN S.L. DATE APPRVD. QdR 8/14/91 DATE
CHECKED JP 8-16-91 APPRVD.
DWG. NO. APPRVD.

WISCONSIN ELECTRIC

POINT BEACH NUCLEAR PLT UNIT-2
WISCONSIN ELECTRIC POWER CO.
MILWAUKEE, WISCONSIN
PBA-1070 SH. 7

B | P.B.A | -1.0 | 7 | 0. | S | H. | 0 | 7

REV NO.	DATE	ZONE	REVISION DESCRIPTION	DRAWN	CHK'D	APPRV'D	REL'D

1501200

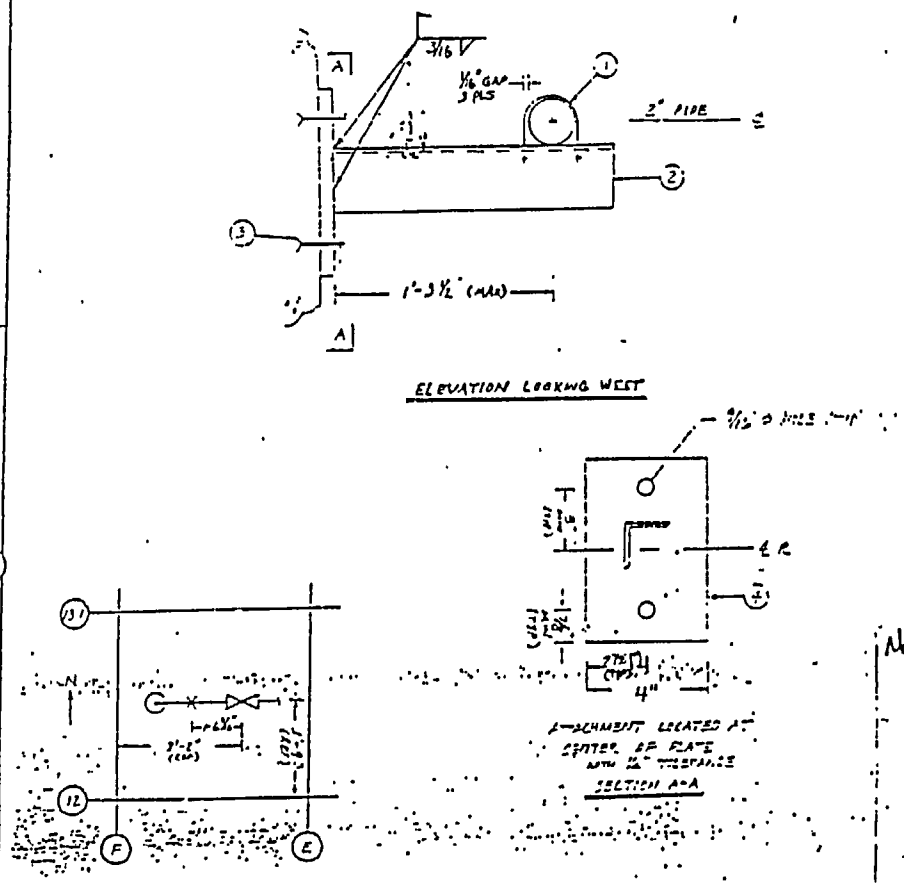

ITEM	QTY.	FIG. NO. PART NO. CALC. NO.	BILL OF MATERIAL DESCRIPTION	WT. (LB.)	RATINGS (LB.) A OR B	C	D
1	1	137N	U-BOLT FOR 2"⌀ PIPE WITH DOUBLE NUTS				
2	1		L2x2x1/4 x 1'-8" LG (A-36) CUT TO SUIT				
3	2		1/2"⌀ HILTI-KWIK II BOLT Le=5" MIN				
4	1		PL 1/2"x8"x4' (A-36)				
			TOTAL WT.				

FILE NO.: 1000705
NODE POINT: 2460

SPECIAL INSTRUCTIONS

SUPPORT RATING

Notes:
1. There is a 1/2" tolerance on all dimensions.
2. The gap dimensions shall be 1/16" in each direction with a tolerance of +0" -1/16". Note that the cumulative gap in any direction shall be < 1/8".
3. There shall be a 2 bolt-diameter tolerance for the location of the CEA bolts. Install per MI 7.1 or equivalent.
4. Larger stock sizes may be substituted for all items per field discretion.

ACC. NO. 1000705
ADDENDUM A TO REV. 01
ATTACHMENT 2
PAGE 10

FOR INFORMATION ONLY

TECHNICAL FILE INDEX
MODIFICATION REQUEST:
HANGER NO: DR3B-2002C

COMPUTER GRAPHICS SYSTEM

MICROFILM NO.
C.G.S. FILE NO.
SCALE: NTS
PROJ. I.D. 31628
DRAWN SIL DATE
APPRVD. OZR 8/16/91 DATE
CHECKED DP 8-16-91
APPRVD.
APPRVD.

WISCONSIN ELECTRIC

POINT BEACH NUCLEAR PLT. UNIT-2
WISCONSIN ELECTRIC POWER CO.
MILWAUKEE, WISCONSIN
PBA-1070 SH. 8

B PBA-1070 SH. 08

REV NO.	DATE	ZONE	REVISION DESCRIPTION	DRAWN	CHK'D	APPRV'D	REL'D

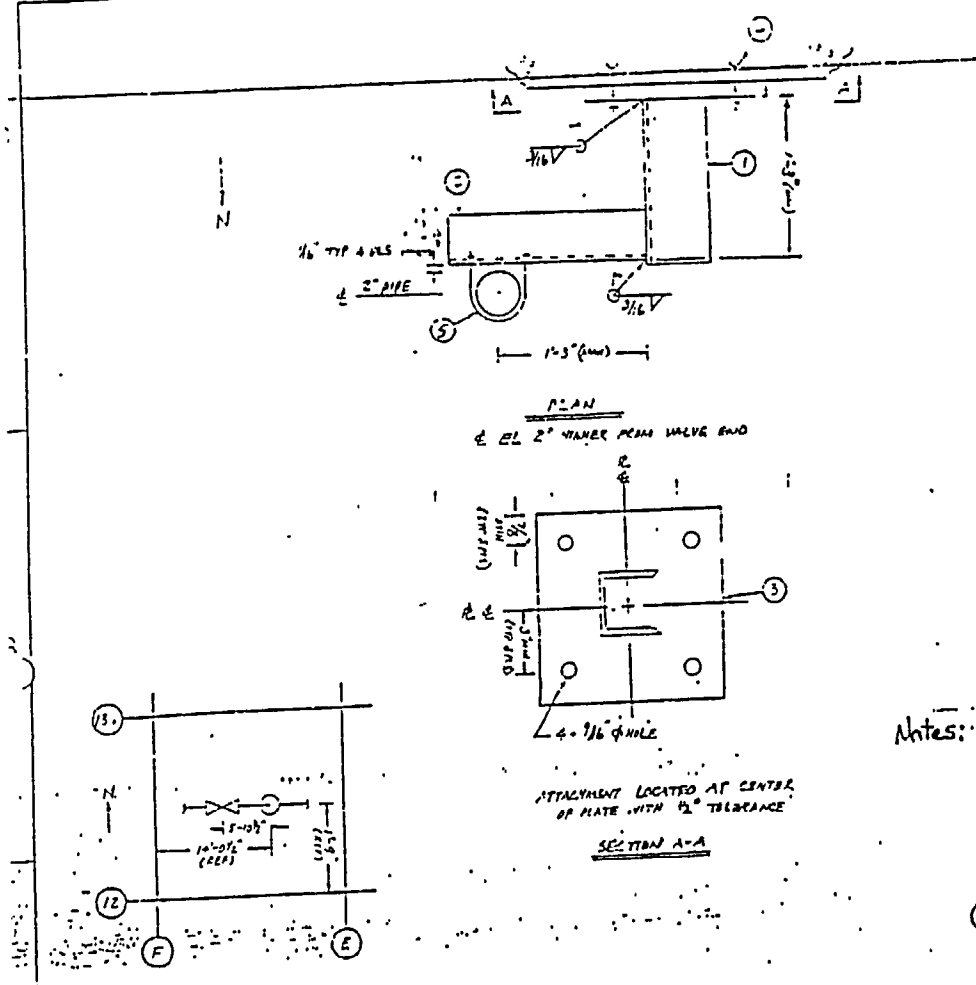

ITEM	QTY.	FIG. NO. PART NO. CALC. NO.	BILL OF MATERIAL DESCRIPTION	WT. (LB.)	RATINGS (LB.) A OR B	C	D
1	1		C4x5.4x1'-6" LG (A-36)				
2	1		C3x4.1x1'-6" LG (A-36)				
3	1		PL 1/2"x9"x9" (A-36)				
4	4		1/2" ϕ HILTI-KWIK II BOLT Le=5" MIN				
5	1	137N	3/8" ϕ U-BOLT WITH DOUBLE NUTS				
			TOTAL WT.				

FILE NO.: 100070S
NODE POINT: 2530

SPECIAL INSTRUCTIONS

SUPPORT RATING

Notes: ① There is a 1/2" tolerance on all dimensions.
② The gap dimensions shall be 1/16" in each direction with a tolerance of +0" -1/16". Note that the cumulative gap in any direction shall be < 1/8".
③ There shall be a 2 bolt-diameter tolerance for the location of the CEA bolts. Install per MI 7.1 or equivalent.
④ Larger stock sizes may be substituted for all items per field discretion.

ACC. NO. 100070S
ADDENDUM A TO REV. 01
ATTACHMENT 2
PAGE 7

TECHNICAL FILE INDEX:
MODIFICATION REQUEST:
HANGER NO: DB3B-2003G

COMPUTER GRAPHICS SYSTEM

MICROFILM NO.
C.G.S. FILE NO.
SCALE: NTS
PROJ. I.D. 31628
DRAWN S&L DATE
APPRVD GAR 8/14/91 DATE
CHECKED JP 8-16-91
APPRVD.
GRAPHICS
APPRVD.

WISCONSIN ELECTRIC

POINT BEACH NUCLEAR PLT UNIT-2
WISCONSIN ELECTRIC POWER CO.
MILWAUKEE, WISCONSIN
PBA-1070 SH. 9

B P.B.A-1070 SH. 09

LSO 1202

REV NO.	DATE	ZONE	REVISION DESCRIPTION	DRAWN	CHK'D	APPRV'D	REL'D

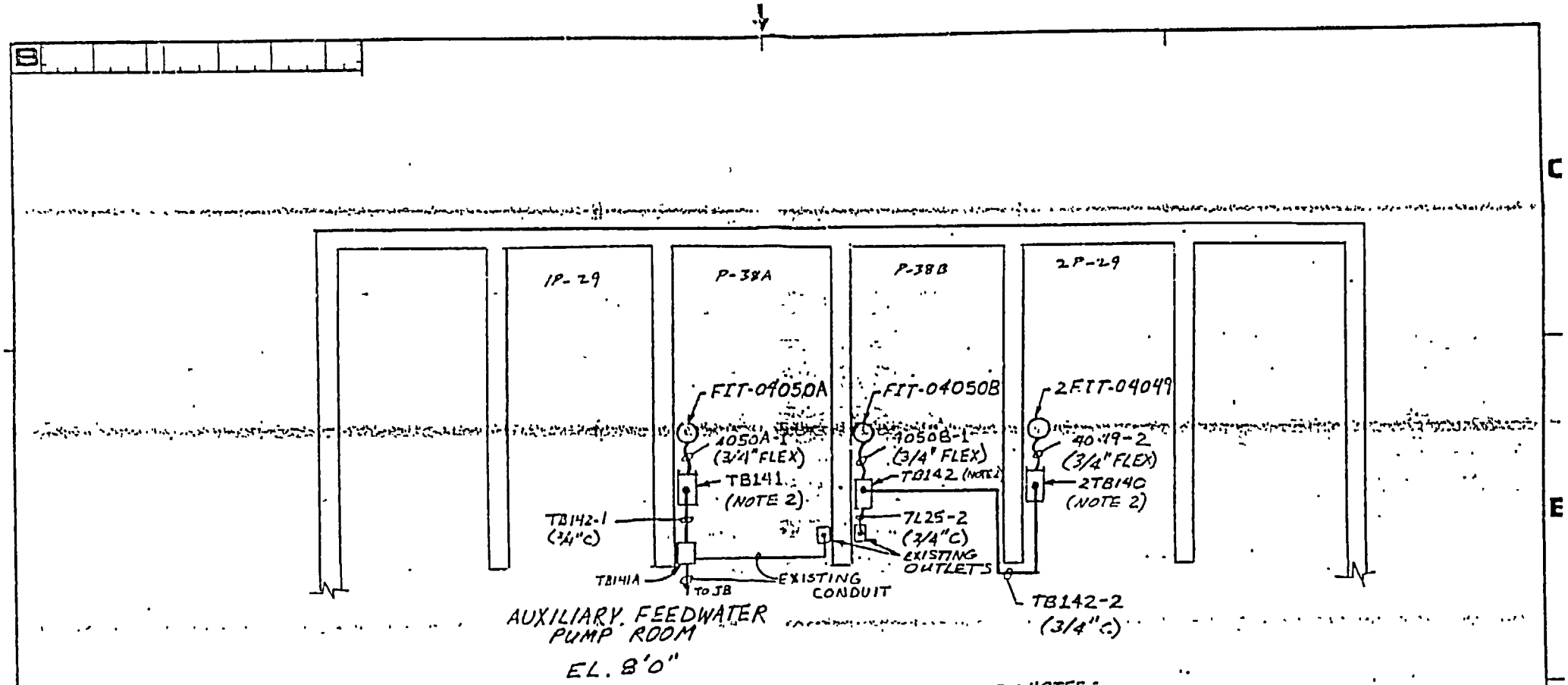

FOR INFORMATION ONLY

NOTES:

1. CONDUIT RUNS ARE SHOWN DIAGRAMMATICALLY. EXACT ROUTING TO BE DETERMINED BY THE INSTALLER.
2. INSTALL TERMINAL BOXES SO THAT FLEX CONDUITS ARE LESS THAN 2 FEET IN LENGTH.

PROJ. IDENT.

REVISIONS

REV NO	ZONE	PROJ. I.D.	DATE	DESCRIPTION	DRAWN	CHK'D	APPRVD	REL'D
1		ECR PB-91-057	9/5/91	Conduit Routing Changed per ECR PB-91-057	KWK	JAS	WBY	

MICROFORM NO

DRAWN KJH 7-30-91 DATE
CHECKED SE Kloyer 7/31/91
DRAFT'D
APPRV'D ALR 8-2-91 DATE
APPRV'D
APPRV'D

Wisconsin Electric

TITLE
AUXILIARY FEEDWATER INSTRUMENTATION CONDUIT LAYOUT.
DWG NO SK-AFW-011/88-099

B S K - A F W - 0 1 1 / 8 8 - 0 9 9

SCALE RELEASE DATE

LS01191

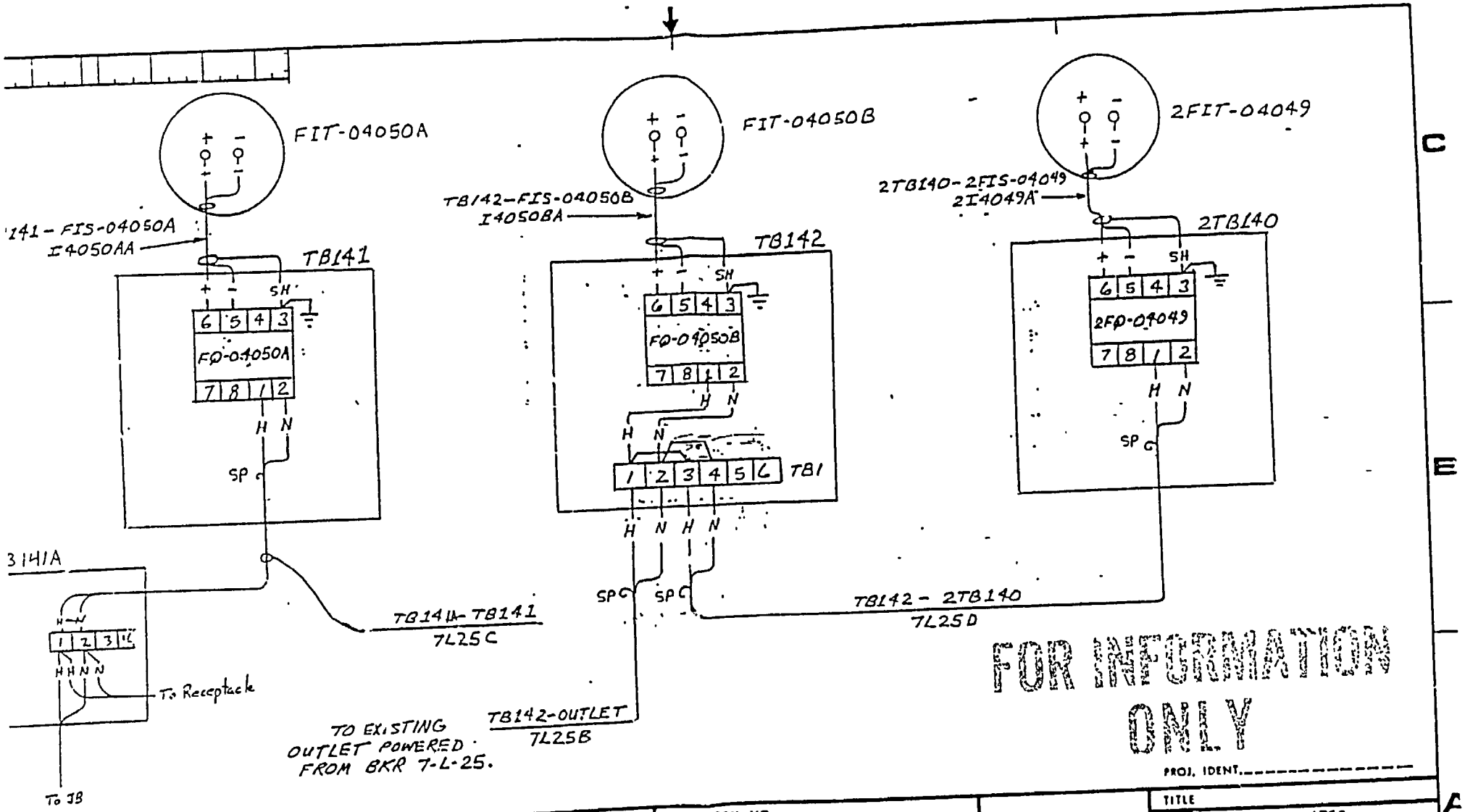

FOR INFORMATION ONLY

PROJ. IDENT.

ZONE	PROJ. ID	DATE	DESCRIPTION	DRAWN	CHK'D	APPRVD.	REL'D
	ECR PB-91-057	9/5/91	Terminations Changed Per ECR PB-91-057		IAS		

MICROFORM NO

DRAWN 7-30-91 APPR'D 8-2-91
CHECKED S.F. Mayer 7/31/91 APPR'D
DRAFT'D APPR'D

Wisconsin Electric

TITLE
AUXILIARY FEEDWATER INSTRUMENTATION CONNECTION DIAGRAM
DWG NO. SK-AFW-012/88-099

B | SK-AFW-012/88-099
SCALE RELEASE DATE

1 LS01192

BILL OF MATERIAL

ITEM NO.	QU. N	DESCRIPTION	MAT'L.	REMARKS
1	1	PIPE, 2" DIA. SCH. 80	A-106	CUT TO SUIT
2	1	PLATE, 1/2" x 6 1/2" x 6 1/2" LG.	A-36	
3	4	HKB II, 3/8" x 5" lg		MIN. EMBED = 2 1/2"
4	1	2" U-BOLT WITH DOUBLE NUTS		FIG. 137

NOTES:

1. PLATE IS PART OF FLOW TRANSMITTER
2. There is a 1/2" Tolerance on all dimensions.
3. Heavier size stock may be used per field discretion
4. Install the HILTIS per MI 7.1, or equivalent.

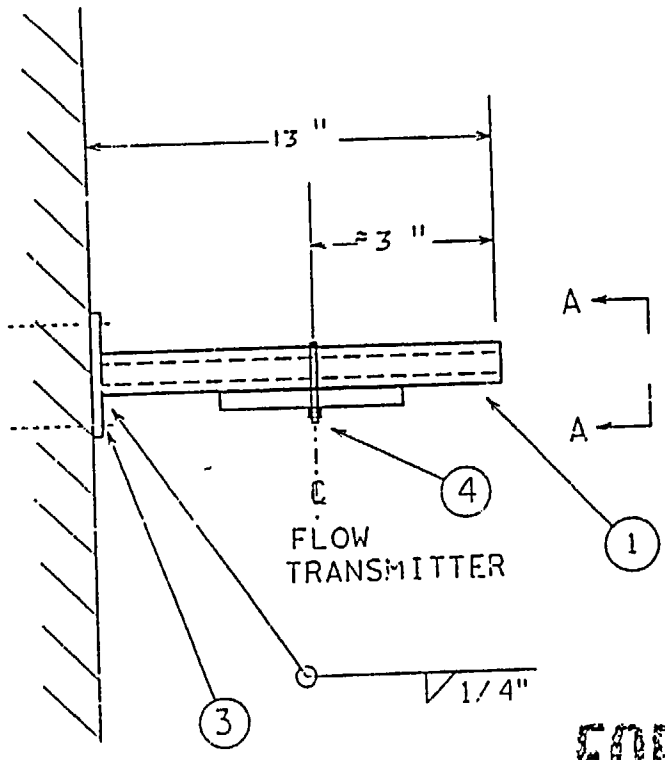

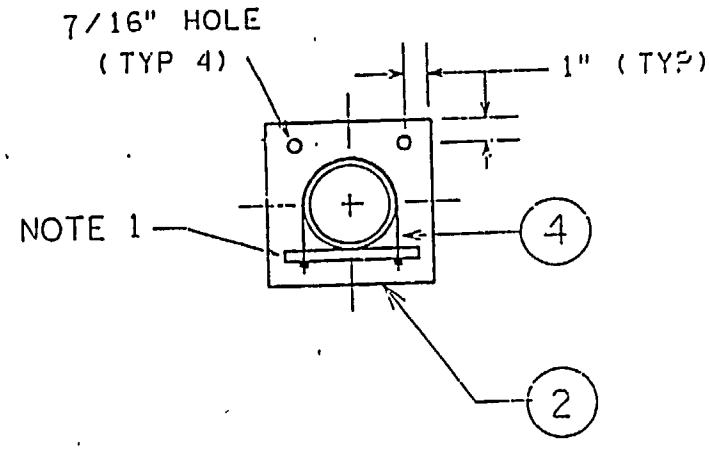

SECTION A-A

FOR INFORMATION ONLY

DRAWING NO.: SK-AFW-013/88-099

COMPUTER GRAPHICS SYSTEM

REV	DATE	REVISION DESCRIPTION	ACT	DRAWN	CHK'D	APPRV'D	REL'D
D	11/15/91	AS-BUILT, INCORPORATED ECR FD 91-055		JAS	JAK	WBJ	

MICROFILM NO.

CGS FILE

SCALE NTS

DRAWN CAW DATE 08-02-91

CHECKED CAP DATE 08-02-91

PROJ. I. J. APPRVD. JJM DATE 8/5/91

APPRVD.

WISCONSIN ELECTRIC

SUPPORT FOR AFW FLOW TRANSMITTERS

B SK-AFW-013/88-099

LS01193

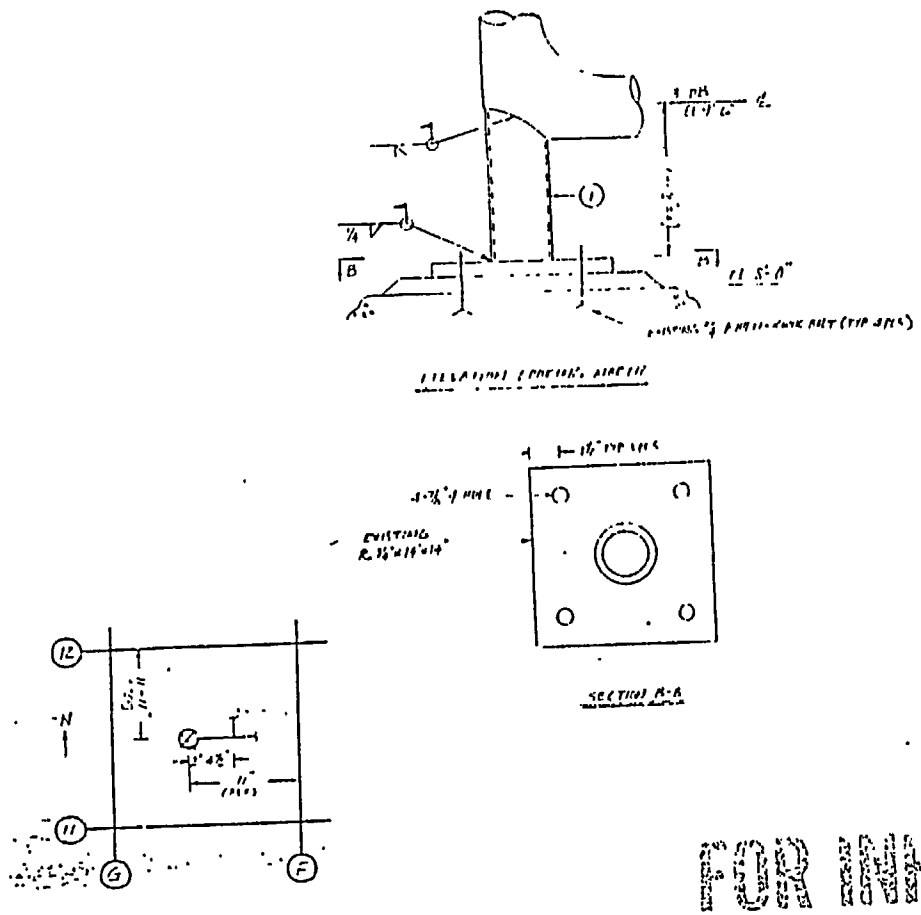

ITEM	QTY.	FIG. NO. PART NO. CALC. NO.	BILL OF MATERIAL DESCRIPTION	WT. (LB.)	FILE NO.	NODE POINT: 1210	
					RATINGS (LB.) A OR B	C	D
1	1		3" SCHED 1-8 LG (A-106 GR B) CUT TO SUIT				
			TOTAL WT.				
SPECIAL INSTRUCTIONS					SUPPORT RATING		

ACC. NO. 1000705
REV. 01
PAGE 14

Note: This drawing shows the modified DB3-2H6 support. The existing base plate and anchors are to be reused.

FOR INFORMATION ONLY

TECHNICAL FILE INDEX:
MODIFICATION REQUEST:
HANGER NO: DB3-2H6

COMPUTER GRAPHICS SYSTEM

REV NO.	DATE	ZONE	REVISION DESCRIPTION	DRAWN	CHK'D	APPRV'D	REL'D

MICROFILM NO.
C.G.S. FILE NO.
SCALE NTS
PROJ. I.D. 31628
DRAWN SJL DATE 8/12/91 APPRVD. WBT 9/5/91
CHECKED AS 8/24/91 APPRVD.
CHAR'G. APPRVD.

WISCONSIN ELECTRIC

POINT BEACH NUCLEAR PLT UNIT-2
WISCONSIN ELECTRIC POWER CO.
MILWAUKEE, WISCONSIN

B S.K-A.F.W-0.1.4/.8.8-.0.9.9.

LS01209

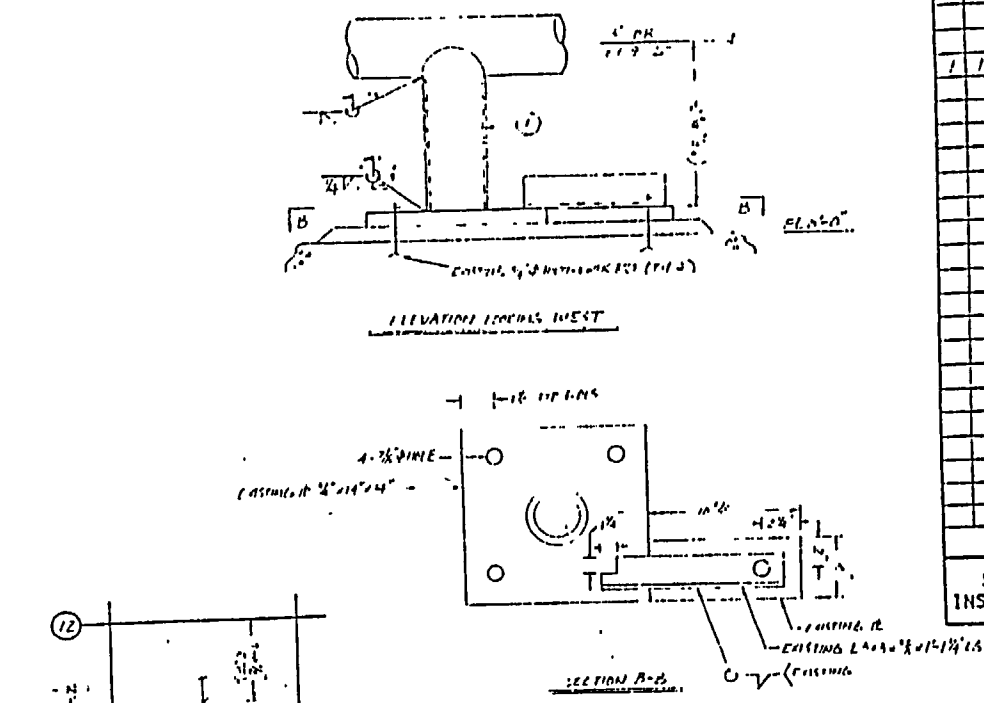

ITEM	QTY.	FIG. NO. PART NO. CALC. NO.	BILL OF MATERIAL DESCRIPTION	WT. (LB.)	FILE NO. / NODE POINT: 2130 RATINGS (LB.) A OR B	C	D
1	1		3 SCHED-1-6"LG (A-105 GR B) CUT TO SET				
			TOTAL WT.				

SPECIAL INSTRUCTIONS

SUPPORT RATING

ACC. NO. 1000705
REV. 01
PAGE 15

Note: This drawing shows the modified DB3-2H7 support. The existing base plate, attached angle and anchors are to be reused.

FOR INFORMATION ONLY

TECHNICAL FILE INDEX:
MODIFICATION REQUEST:
HANGER NO: DB3-2H7

COMPUTER GRAPHICS SYSTEM

REV NO.	DATE	ZONE	REVISION DESCRIPTION	DRAWN	CHK'D	APPRV'D	REL'D

MICROFILM NO.
C.G.S. FILE NO.
SCALE NTS
PROJ. I.D. 31628
DRAWN S.L. DATE 8/12/91
APPRVD. W.B.T. DATE 9/2/91
CHECKED JAS 8/24/91
APPRVD.
DRAFTG.

WISCONSIN ELECTRIC

POINT BEACH NUCLEAR PLT UNIT-2
WISCONSIN ELECTRIC POWER CO
MILWAUKEE, WISCONSIN

B S.K.-A.F.W.-0.1.5/.88-.0.9 9.

LS01010

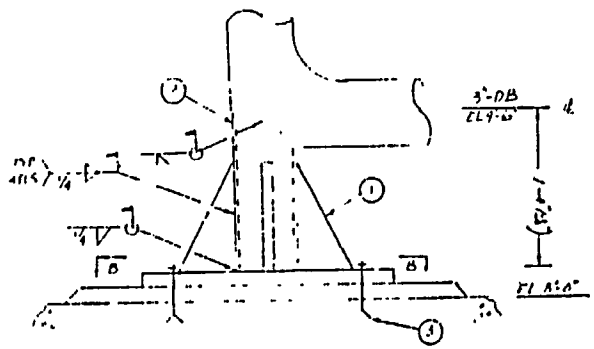

ELEVATION LOOKING NORTH

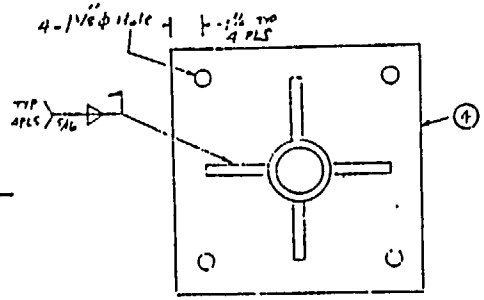

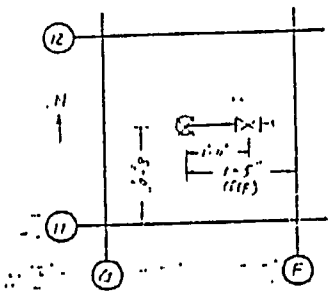

SECTION B-B

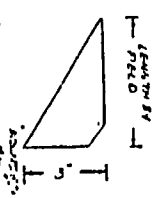

DETAIL 1

ITEM	QTY.	FIG. NO. PART NO. CALC. NO.	BILL OF MATERIAL DESCRIPTION	WT. (LB.)	FILE NO. : NODE POINT: 1240 RATINGS (LB.) A OR B	C	D
1	4		PL 1/2" THK (A-36) SEE DETAIL 1				
2	1		3" SCH80 x 1'-10" LG (A-106 GR B) CUT TO SHIT				
3	4		1"φ HILTI-KWIK BOLT Min Embed 6"				
4	1		PL 1" x 14 1/2" x 14 1/2" (A-36)				
			TOTAL WT.				
SPECIAL INSTRUCTIONS					SUPPORT RATING		

ACC. NO. [illegible]
REV. 01
PAGE 1[illegible]

Notes:

1. Use 1" Drillco core bit to cut out existing 3/4" HILTIs.
2. Remove old 14"x14" grout pad and construct new 14-1/2"x14-1/2" grout pad.

TECHNICAL FILE INDEX:
MODIFICATION REQUEST:
HANGER NO: DB3-H11

COMPUTER GRAPHICS SYSTEM

FOR INFORMATION ONLY

REV NO.	DATE	ZONE	REVISION DESCRIPTION	DRAWN	CHK'D	APPRV'D	REL'D
1	11/15/91		AS-BUILT, INCORPORATED ECR PB-91-059	JAS	[illegible]		

MICROFILM NO.
C.G.S. FILE NO.
SCALE NTS
DRAWN S&L 8/12/91
CHECKED JAS 8/27/91
DRAFTG.
PROJ. I.D. 31628
APPRVD. WBT 9/9/91
APPRVD.
APPRVD.

WISCONSIN ELECTRIC

POINT BEACH NUCLEAR PLT UNIT-2
WISCONSIN ELECTRIC POWER CO.
MILWAUKEE, WISCONSIN

B S.K.-A.F.W.-0.1.6/.8.8-0.9.9.

LS01211

INTERNAL CORRESPONDENCE

VPNPD-90-156

To: R. A. Abdoo

From C. W. Fay

Date March 27, 1990

Subject POINT BEACH UNIT 2 SAFETY INJECTION, RESIDUAL HEAT REMOVAL, AND CONTAINMENT SPRAY PUMPS TEST LINE INSTALLATION

Copy To. J. W. Boston, R. W. Britt, S. G. Cartwright, G. D. Frieling, E. J. Lipke, J. F. McNamara, R. A. Newton, J. J. Zach, File

88-099

The Nuclear Power Department requests project authorization for Project 36516 to begin work on the installation of the Point Beach Unit 2 safety injection, residual heat removal, and containment spray pumps test line. The costs associated with this project is summarized on the attached project requisition detail. The installation of the test line is anticipated for the fall refueling outage in 1991.

This project will satisfy our commitments to the Nuclear Regulatory Commission regarding Bulletins 88-04 and 89-04. Copies of responses are attached.

Please contact me if you have any questions regarding this evaluation or the subsequent project scope.

R. A. Newton for C. W. Fay

JAP/jg

RECEIVED

APR 5 1990

POINT BEACH

Form 31
Lot # 70

WISCONSIN ELECTRIC POWER COMPANY

PROJECT REQUISITION SUMMARY

BUDGET ITEM: 852713 PUMP TEST AND RECIRCULATION LINES

COORDINATOR: GARRY D. FRIELING, P377

PROJECT	TITLE	PROJECT COST	RETIREMENT AMOUNT
36516	U2 SI, SPRAY & RHR PUMP TEST LINE	245,150	N/A
	TOTAL	245,150	N/A
	PREVIOUS AUTHORIZATION	N/A	N/A

CATEGORY: POWER PLANT CHANGES AND ADDITIONS
TYPE : MAJOR MAINTENANCE

REQUESTING DEPT:
COORD. DEPT :
PSCW AUTH. :

APPROVAL SIGNATURES:

PREPARED BY
J. A. PORTER

C. W. FAY
VICE PRESIDENT

J. W. BOSTON
EXECUTIVE V.P. &

FORM 5558

WISCONSIN ELECTRIC POWER COMPANY

PROJECT REQUISITION DETAIL

03/23/90 16:19

BUDGET ITEM : 852713 PUMP TEST AND RECIRCULATION LINES

PROJECT : 36516 U2 SI, SPRAY & RHR PUMP TEST LINE

ADMINISTRATOR: JAY A. PORTER, P377 SIGNED: Jay A Porter

DESCRIPTION :

SUMMARY: DESIGN, PURCHASE, AND INSTALL FULL FLOW TEST LINES ON THE SAFETY INJECTION, RESIDUAL HEAT REMOVAL AND CONTAINMENT SPRAY PUMPS TO SATISFY THE REQUIREMENTS OF NRC BULLETINS 88-04 AND 89-04.

THE TEST LINES WILL BE TIED INTO EXISTING PIPING AND INTO A COMMON HEADER. EACH TEST LINE WILL CONTAIN A FLOW CONTROL/ISOLATION VALVE AND THE COMMON HEADER WILL HAVE A REMOVABLE SPOOL PIECE FOR THE SECONI MEANS OF ISOLATION. REDUNDANT ISOLATION IS REQUIRED FOR SAFETY RELATI SYSTEMS. THE COMMON HEADER WILL BE INSTRUMENTED WITH FLOW INDICATION AND WILL TERMINATE AT AN EXISTING TANK. (REFUELING WATER STORAGE TANI

LOCATION INFORMATION
ADM DEPT: NUC
REQ DEPT: NUC
DIVISION: NUCLEAR SYSTEMS ENG & ANA
DISTRICT: NUCLEAR SYSTEMS ENG DIVIS

DISTRIBUTION BY POLITICAL DISTRICT
38 100%

T JOB:

ESTIMATED IN-SERVICE DATE: 01/01/90

YEAR	CAPITAL	O&M	REMOVAL	CLEARING	OTHER	TOTAL
PRIOR		841				15,
1990		15,830				228,
1991		228,479				
TOTAL		245,150				245

RETIREMENT		SALVAGE	

File No. [illegible]

P.A.D. 50.1

WISCONSIN ELECTRIC POWER COMPANY
PLANT ACCOUNTING DIVISION
CAPITAL VERSUS EXPENSE ADVISORY

Summary Sheet

Inquiry Date 3-15-90

Inquiree J.A. PORTER Department NUCLEAR

Project No. 36515 / 36516

Project Description:

DESIGN, PURCHASE, AND INSTALL FULL FLOW TEST LINES ON THE SAFETY INJECTION, RESIDUAL HEAT REMOVAL AND CONTAINMENT SPRAY SYSTEMS AT POINT BEACH NUCLEAR PLANT. UNIT 1 AND UNIT 2.

Cost Disposition Summary*

Capital (Construction)		
Expense (Operations/Maintenance)	~~245,150~~ 490,300	3-19-90
Removal		
Total Project Cost	~~245,150~~ 490,300	3-19-90
Retirement		
Est. Salvage		

*Note: Changes in the scope of the project and/or variances from costs stated herein may alter the above disposition. Consult with Plant Accounting if significant changes arise.

Prepared by [signature] Date 3-16-90

Reviewed by _____ Date _____

Supervisor _____ Date _____

Superintendent [signature] Date 3-16-90

WISCONSIN ELECTRIC POWER COMPANY
PLANT ACCOUNTING DIVISION
CAPITAL VERSUS EXPENSE ADVISORY

I. Retirement Units of Property Involved

	Ref. Letter	Unit No	Unit Description	W.O. Ref.	Year Installed	Original Cost	HWI Updated Cost	Project Cost
275 24	A	1862	RESIDUAL HEAT REMOVAL SYS.	700	1970	500,082	1,655,033	75,189
275 95	A 1	"	" " " "	700	1972	566,500	1,657,758	75,189
	B	1865	SAFETY INJECTION SYS.	700	1970	1,891,659	6,260,490	11,691
	B 1	"	" " "	700	1972	2,203,805	6,449,029	11,691
	C	1863	CONTAINMENT SPRAY SYS.	700	1970	303,472	1,004,348	35,695
	C 1	"	" " "	700	1972	348,990	1,021,255	35,695

II. Disposition of costs

Ref. Letter	Capital	Expense	Retirement	Removal	Salvage	Reasoning
A		75,189				MINOR ITEM ADDITION
A 1		75,189				" " "
B		11,691				" " "
B 1		11,691				" " "
C		35,695				" " "
C 1		35,695				" " "
		245,150 *				

III. Historical Precedents/Comments

* REPRESENTS A PER UNIT COST. TOTAL PROJECT COST FOR UNITS #1 + #2 WOULD BE $490,300

[illegible] 3-19-90
[illegible] 3-19-90

Wisconsin Electric
POWER COMPANY

231 W Michigan, PO Box 2046, Milwaukee WI 53201

(414) 221-2345

VPNPD-90-101
NRC-90-018

March 2, 1990

U. S. NUCLEAR REGULATORY COMMISSION
Document Control Desk
Mail Station P1-137
Washington, D. C. 20555

Gentlemen:

DOCKETS 50-266 AND 50-301
GUIDANCE ON IST PROGRAMS
GENERIC LETTER 89-04 FOLLOW-UP
POINT BEACH NUCLEAR PLANT, UNITS 1 AND 2

As part of our October 3, 1989 response to Generic Letter 89-04, we committed to complete some specific testing by December 31, 1989. Following this testing, based on the results, we would identify our course of action on the areas of containment spray pumps and the service water system.

Containment Spray Pumps

Generic Letter 89-04, Item 9. Our special testing indicated that we could utilize a mini recirc flow path that contains flow indication. This method of testing is, however, operationally undesirable. First, it provides only single valve isolation between pump discharge pressure and the containment spray nozzles. The resultant potential for inadvertently spraying of containment is a risk we choose not to assume. Secondly, a portion of the piping can become filled with borated water and remain in this condition for extended time periods. This also is a condition we want to avoid.

In order to comply with the requirements of Generic Letter 89-04, Item 9, we will make physical modifications to the containment spray systems of Units 1 and 2. Piping systems will be installed which will allow pump full-flow testing on a routine basis during operation. Flow instrumentation will be installed. These system modifications will be installed during each unit's 1991 refueling outage.

RECEIVED
NUCLEAR

Service Water System

Generic Letter 89-04, Item 1, requires full-flow testing of pump discharge check valves.

Item 3 requires check valve back-leakage testing (not specifically identified in the October 3, 1989 response, but tested for).

Item 9 requires pump testing at full or substantial flow and obtaining required test quantities.

The results of our December 12, 1989 testing were inconclusive as to whether or not we can comply with Generic Letter 89-04, Items 1, 3, and 9 relative to the service water system. We plan to rescope our testing to ensure that routine testing, in accordance with Items 1, 3, and 9, can be done. We will complete this testing by April 1, 1990.

Requested Relief

We request relief from two ASME Code requirements that we are meeting. These two areas are (1) the use of amplitude as units of vibration measurement for pumps and (2) taking pump bearing measurements. Relief requests for these two items, as they will be inserted into our IST program, are attached.

As these relief requests are not addressed in Generic Letter 89-04, and in keeping with the guidance provided therein, we will not implement the alternate testing described until we receive NRC approval. We believe these requests are technically well supported and are generally accepted practices throughout the nuclear industry. Further, the relief described will cause the test run times of safety-related pumps to be reduced. For the reasons given, we request approval of these relief requests as soon as possible.

Fuel Oil Transfer System, Addition to IST Program

In the near future, we will add the fuel oil transfer system pumps and valves to the IST program. Initially, testing will not be in compliance with Section XI Codes due to the current system configuration. Modifications to upgrade the configuration to that required to satisfy testing are being developed. Rather than delaying testing to wait for modifications to be completed or relief request approval, we plan to begin testing with the system as it is. When physical modifications are completed, we will test according to ASME Section XI. The physical modifications needed will be completed by January 1991.

Because we will be submitting a complete IST program rewrite for the next ten-year interval before January 1, 1991, we do not intend to submit the program changes for fuel oil transfer system inclusion to you prior to January 1, 1991.

We will be updating our IST program to reflect the addition of the fuel oil transfer system.

Compliance Status Summary

Attached is a Compliance Status Summary revised to indicate the information on the containment spray pumps and service water system. Changes are indicated by bars in the right margin. The summary has been given a revision number and date.

Very truly yours,

C. W. Fay
Vice president
Nuclear Power

TGS/dpg

Attachments

Copies to NRC Regional Administrator, Region III
NRC Resident Inspector

Blind copies to Krieser, Lipke, Newton, Staskal, Zach

COMPLIANCE STATUS SUMMARY

GL 89-04 Item	Compliance/Status	
1	No	Additional special testing required, to be completed by April 1, 1990.
2	Yes	Except alternate testing per page 3 of GL 89-04 was selected for some valves.
3	No	Physical modifications required
4	Yes	
5	No	Following the corrective actions described compliance will be achieved.
6	Yes	
7	(Not applicable to PWRs)	
8	Yes	
9	No	a. Containment spray system of both units to be modified to allow full flow testing. Completion by January 1992. b. Service water system implementing procedures changed by August 1990.
10	Yes	Except that limits apply by penetration which may be more than one valve.
11	No	Scope review to be completed as part of our next 10-year IST cycle, December 1990.

PUMP RELIEF REQUEST NO. 11

System:	Safety Related, Unit 1 and Unit 2
Component:	All pumps in the program
Class:	All
Function:	To provide flow to safety systems
Test Requirements:	To measure vibration in units of displacement. (IWP 3210, IWP 4500 and any other sections)
Basis for Relief:	The state of the art of vibration testing has improved dramatically over several years. Experience has shown that vibration testing can be a primary indicator of pump performance and degradation so long as proper units are measured and analyzed. This is documented in the current ASME Section XI code in that OM-6, which allows the use of vibration velocity, is crossreferenced.
Alternate Testing:	The use of velocity as our vibration units and to use OM-b - 1989, Part 6, Tables 3 and 3a (attached) to define our vibration acceptance criteria.

Status:
Document:

(b)

TABLE 3
RANGES FOR TEST PARAMETERS

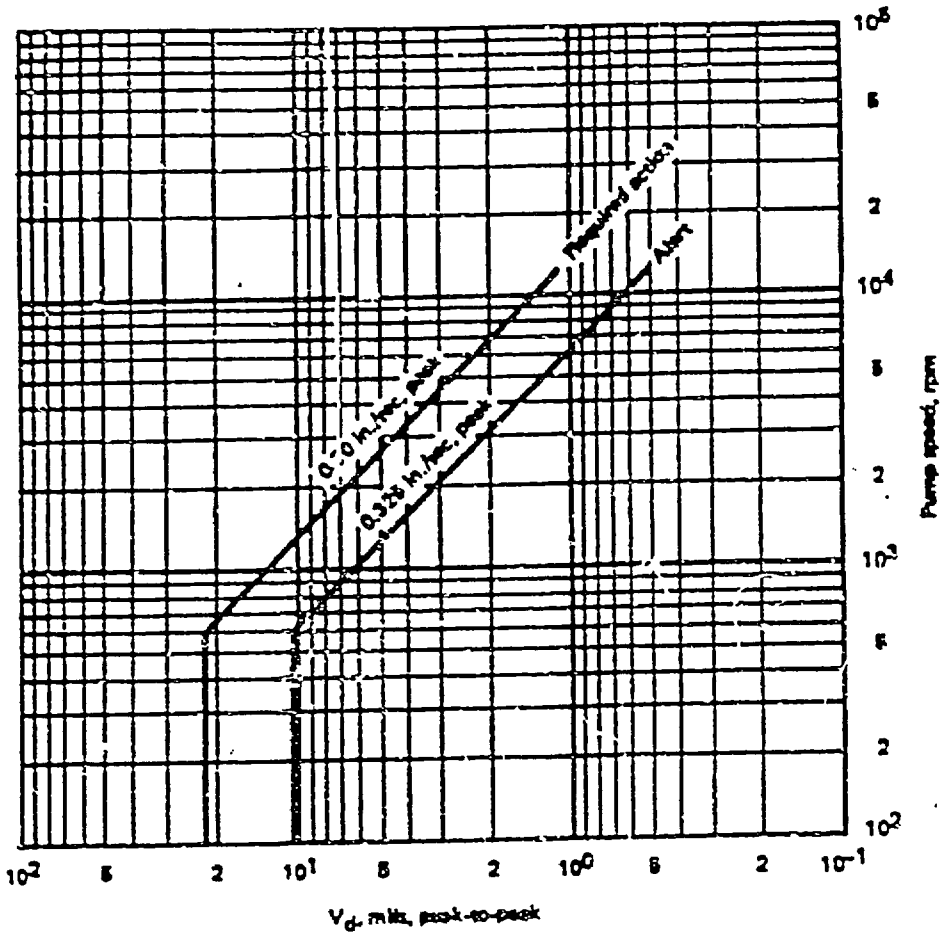

TABLE 3a[1]

Pump Type	Pump Speed	Test Parameter	Acceptable Range	Alert Range	Required Action Range
Centrifugal and vertical line shaft [Note (2)]	< 600 rpm	V_d or V_v	≤ 2.5 V_i	> 2.5 V_i to 6 V_i, or > 10.5 mils	> 6 V_i, or > 22 mils
Centrifugal and vertical line shaft [Note (2)]	≥ 600 rpm	V_v or V_d	≤ 2.5 V_i	> 2.5 V_i to 6 V_i, or > 0.325 in./sec	> 6 V_i, or > 0.70 in./sec
Reciprocating		V_d or V_v	≤ 2.5 V_i	> 2.5 V_i to 6 V_i	> 6 V_i

(Table 3 continues on next page.)

(Notes follow at end of table.)

TABLE 3b

Test Parameter	Acceptable Range	Alert Range		Required Action Range	
		Low	High	Low	High
P (Positive displacement pumps)	0.93 to 1.10P_r	0.90 to <.93P_r	...	<0.90P_r	>1.10P_r
ΔP (Vertical line shaft pumps)	0.95 to 1.10ΔP_r	0.93 to <.95ΔP_r	...	<0.93ΔP_r	>1.10ΔP_r
Q (Positive displacement vertical line shaft pumps)	0.95 to 1.10Q_r	0.93 to <.95Q_r	...	<0.93Q_r	>1.10Q_r
ΔP (Centrifugal pumps)	0.90 to 1.10ΔP_r	...	...	<0.90ΔP_r	>1.10ΔP_r
Q (Centrifugal pumps)	0.90 to 1.10Q_r	...	...	<0.90Q_r	>1.10Q_r

GENERAL NOTE: The subscript r denotes reference value.

NOTES:
(1) Vibration parameter per Table 2. V_r is vibration reference value in the selected units.
(2) Refer to Fig. 1 to establish displacement limits for pumps with speeds ≥600 rpm or velocity limits for pumps with speeds <600 rpm.

6.2 Time Allowed for Analysis of Tests

All test data shall be analyzed within 96 hr after completion of a test.

7 RECORDS AND REPORTS

7.1 Pump Records

The Owner shall maintain a record which shall include the following for each pump covered by this Part:

(a) the manufacturer and the manufacturer's model and serial or other identification number;

(b) a copy or summary of the manufacturer's acceptance test report if available;

(c) a copy of the pump manufacturer's operating limits.

7.2 Inservice Test Plans

The Owner shall maintain a record of test plans and procedures which shall include the following:

(a) the hydraulic circuit to be used;

(b) the location and type of measurement for the required test parameters;

(c) the reference values;

(d) the method of determining reference values which are not directly measured by instrumentation.

7.3 Record of Tests

The Owner shall maintain a record of each test which shall include the following:

(a) pump identification;

(b) date of test;

(c) reason for test (e.g., post-maintenance, routine inservice test, establishing reference values);

(d) values of measured parameters;

(e) identification of instruments used;

(f) comparisons with allowable ranges of test values and analysis of deviations;

(g) requirement for corrective action;

(h) evaluation and justification for changes to reference values;

(i) signature of the person or persons responsible for conducting and analyzing the test.

7.4 Record of Corrective Action

The Owner shall maintain records of corrective action which shall include a summary of the corrections made, the subsequent inservice tests and confirmation of operational adequacy (see para. 4.4), and the signature of the individual responsible for corrective action and verification of results.

PUMP RELIEF REQUEST NO. 12

System:	Safety Related, Unit 1 and Unit 2
Component:	All pumps in the program
Class:	All
Function:	To provide flow to safety systems
Test Requirements:	To measure each test quantity in Table IWP-3100-1; this includes bearing temperatures.
Basis for Relief:	Almost all pumps are designed such that temperature at the bearing itself cannot be obtained. The temperature which is actually monitored is bearing housing temperature or cooling/lubricant temperatures. Such temperatures are not representative of what is actually occurring at the bearing. Due to the failure mechanisms of bearings, it is unlikely that occasional, periodic temperature monitoring will indicate impending failures.
Alternate Testing:	To perform vibration monitoring, using the units of velocity, via state-of-the-art data analysis equipment provided pump relief request 11 is granted. Such vibration monitoring can indicate bearing performance and degradation.

Status:
Document:

INTERNAL CORRESPONDENCE

VPNPD-90-157

88-099

To R. A. Abdoo

From C. W. Fay

Date March 27, 1990

Subject. POINT BEACH UNIT 1 SAFETY INJECTION, RESIDUAL HEAT REMOVAL, AND CONTAINMENT SPRAY PUMPS TEST LINE INSTALLATION

Copy To

J. W. Boston	G. D. Frieling	R. A. Newton
R. W. Britt	E. J. Lipke	J. J. Zach
S. G. Cartwright	J. F. McNamara	File

The Nuclear Power Department requests project authorization for Project 36515 to begin work on the installation of the Point Beach Unit 1 safety injection, residual heat removal, and containment spray pumps test line. The costs associated with this project is summarized on the attached project requisition detail. The installation of the test line is anticipated for the spring refueling outage in 1991.

This project will satisfy our commitments to the Nuclear Regulatory Commission regarding Bulletins 88-04 and 89-04. Copies of responses are attached.

Please contact me if you have any questions regarding this evaluation or the subsequent project scope.

R. A. Newton for C. W. Fay

JAP/jg

RECEIVED

5 1990

POINT BEACH

Form 3179 2 85

File No. [illegible]

P.A.D. 50.1

WISCONSIN ELECTRIC POWER COMPANY
PLANT ACCOUNTING DIVISION
CAPITAL VERSUS EXPENSE ADVISORY

Summary Sheet

Inquiry Date 3-15-90

Inquiree J. A. PORTER Department NUCLEAR

Project No. 36515 / 36516

Project Description:

DESIGN, PURCHASE, AND INSTALL FULL FLOW TEST LINES ON THE SAFETY INJECTION, RESIDUAL HEAT REMOVAL AND CONTAINMENT SPRAY SYSTEMS AT POINT BEACH NUCLEAR PLANT. UNIT-1 AND UNIT-2.

Cost Disposition Summary*

Capital (Construction)		
Expense (Operations/Maintenance)	~~245,150~~ 490,300	3-19-90
Removal		
[illegible] Project Cost	~~245,150~~ 490,300	3-19-9
[illegible]ement		
Est. Salvage		

*Note: Changes in the scope of the project and/or variances from costs stated herein may alter the above disposition. Consult with Plant Accounting if significant changes arise.

Prepared by [signature] Date 3-16

Reviewed by _____ Date _____

Supervisor _____ Date _____

Superintendent [signature] Date 3-16

FORM 1555A

WISCONSIN ELECTRIC POWER COMPANY

PROJECT REQUISITION SUMMARY

03/23/90 16:19

BUDGET ITEM: 952713 PUMP TEST AND RECIRCULATION LINES

COORDINATOR: GARRY D. FRIELING, P377

PROJECT	TITLE	PROJECT COST	RETIREMENT AMOUNT	WO/PR
36515	U1 SI, SPRAY & RHR PUMP TEST LINE	245,150	N/A	
	TOTAL	245,150	N/A	
	PREVIOUS AUTHORIZATION	N/A	N/A	

CATEGORY: POWER PLANT CHANGES AND ADDITIONS
TYPE : MAJOR MAINTENANCE

REQUESTING DEPT: NUC
COORD. DEPT : NUC
PSCW AUTH. : NO

APPROVAL SIGNATURES:

PREPARED BY
J. A. PORTER

C. W. FAY
VICE PRESIDENT

J. W. BOSTON
EXECUTIVE V.P. & COO

FORM 1555B

WISCONSIN ELECTRIC POWER COMPANY

PROJECT REQUISITION DETAIL

BUDGET ITEM : 852713 PUMP TEST AND RECIRCULATION LINES

PROJECT : 36515 U1 SI, SPRAY & RHR PUMP TEST LINE

ADMINISTRATOR: JAY A. PORTER, P377 SIGNED: Jay A Porter

DESCRIPTION :

SUMMARY: DESIGN, PURCHASE, AND INSTALL FULL FLOW TEST LINES ON THE SAFETY INJECTION, RESIDUAL HEAT REMOVAL AND CONTAINMENT SPRAY PUMPS TO SATISFY THE REQUIREMENTS OF NRC BULLETINS 88-04 AND 89-04.

THE TEST LINES WILL BE TIED INTO EXISTING PIPING AND INTO A COMMON HEADER. EACH TEST LINE WILL CONTAIN A FLOW CONTROL/ISOLATION VALVE AND THE COMMON HEADER WILL HAVE A REMOVABLE SPOOL PIECE FOR THE SECOND MEANS OF ISOLATION. REDUNDANT ISOLATION IS REQUIRED FOR SAFETY RELATED SYSTEMS. THE COMMON HEADER WILL BE INSTRUMENTED WITH FLOW INDICATION AND WILL TERMINATE AT AN EXISTING TANK. (REFUELING WATER STORAGE TANK)

LOCATION INFORMATION
ADM DEPT: NUC
REQ DEPT: NUC
DIVISION: NUCLEAR SYSTEMS ENG & ANA
DISTRICT: NUCLEAR SYSTEMS ENG DIVIS

DISTRIBUTION BY POLITICAL DISTRICT
38 100%

T JOB:

ESTIMATED IN-SERVICE DATE: 01/01/90

YEAR	CAPITAL	O&M	REMOVAL	CLEARING	OTHER	TOTAL
PRIOR		1,880				1,88
1990		15,830				15,8
1991		227,440				227,4
TOTAL		245,150				245,1

RETIREMENT		SALVAGE	

WISCONSIN ELECTRIC POWER

PLANT ACCOUNTING DIVISION

CAPITAL VERSUS EXPENSE ADVISORY

I. Retirement Units of Property Involved

	Ref. Letter	Unit No	Unit Description	W.O. Ref.	Year Installed	Original Cost	HWI Updated Cost	Project Cost
275 .24	A	1862	RESIDUAL HEAT REMOVAL SYS.	700	1970	500,082	1,655,033	75,189
275 .95	A 1	"	" " " "	700	1972	566,500	1,657,758	75,189
	B	1865	SAFETY INJECTION SYS.	700	1970	1,891,659	6,260,490	11,691
	B 1	"	" " "	700	1972	2,203,805	6,449,029	11,691
	C	1863	CONTAINMENT SPRAY SYS.	700	1970	303,472	1,004,348	35,695
	C 1	"	" " "	700	1972	348,990	1,021,255	35,695

II. Disposition of costs

Ref. Letter	Capital	Expense	Retirement	Removal	Salvage	Reasoning
A		75,189				MINOR ITEM ADDITION
A 1		75,189				" " "
B		11,691				" " "
B 1		11,691				" " "
C		35,695				" " "
C 1		35,695				" " "
		245,150 *				

III. Historical Precedents/Comments

* REPRESENTS A PER UNIT COST. TOTAL PROJECT COST FOR UNITS #1 + #2 WOULD BE $490,300

[illegible] 3-19-90

ARK 3-17-90

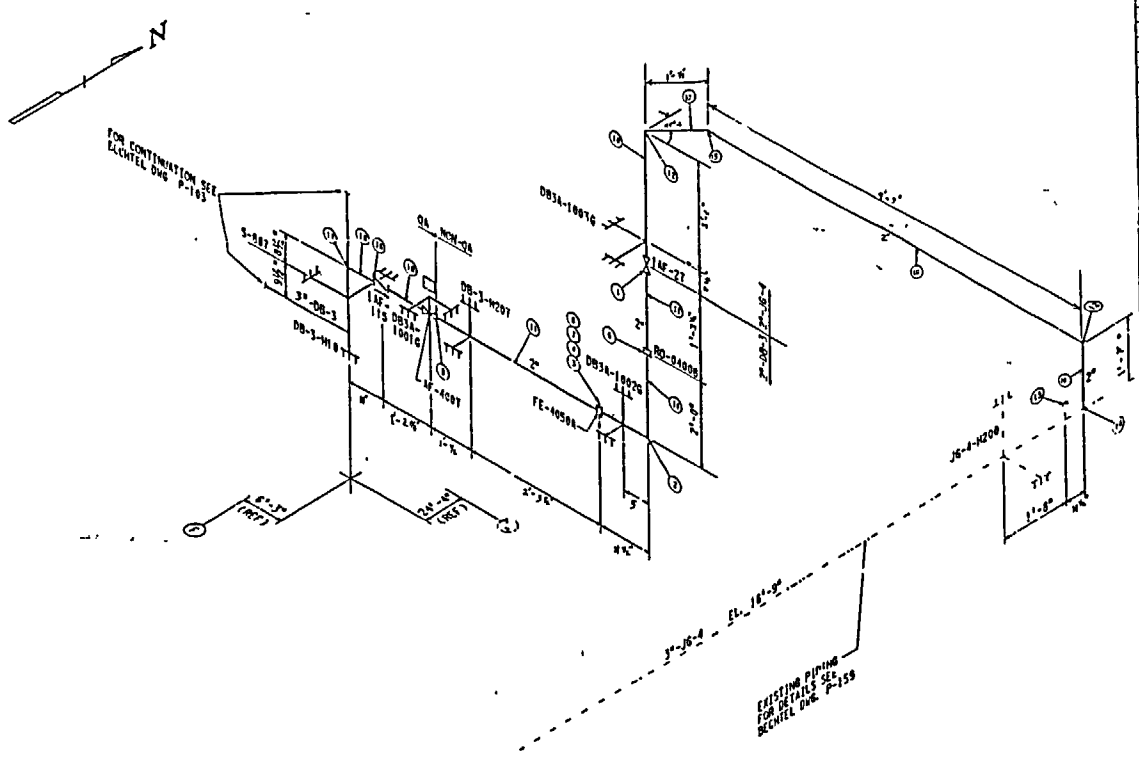

BILL OF MATERIAL

ITEM NO.	QUAN.	DESCRIPTION	MAT'L.	VENDOR/CATALOG NO.
1	1	2" 1500# [illegible]BE VALVE	[illegible]	
2	1	2" SCH 8[illegible] [illegible]0° ELL (SW) TYPE 304	A182	
3	1	FLOW ORIFICE FLANGE	304 SS	
4	1	FLOW ORIFICE PLATE	316 SS	
5	1	2" 1500# CONTROL VALVE	SS	ID#21A88RG
6	1	FLOW RESTRICTING ORIFICE	304 SS	P/N 125885-CH
7	1	FLOW X-MITTER W/INTEGRAL DISPLAY		#1151DP-5-S-22-B1-M5
8	1	6"X6"X4" ELECTRICAL ENCLOSURE		#1414PHE
9	1	TRANSMITTER POWER SUPPLY		P/N 49-15-401
10	20 ft	2" SCH. 40 SEAMLESS PIPE, TYPE 304L	A312	
11	15 ft	2" SCH. 80 SEAMLESS PIPE, TYPE 304L	A312	
12	1	2" SCH 40 90° ELL (SW) TYPE 304	A312	
13	2	2" SCH 40 45° ELL (SW) TYPE 304	A312	
14	1	2"X3" HALF COUPLING, TYPE 304	SS	
15	1	1½" SCH 40 CAP (SW) TYPE 304		
16	1	2" 1500# CHECK VALVE, PISTON TYPE	TYPE316	FIG #3674F316J
17	1	3"X2" 3000# SOCKOLET		
18	5 ft	2" SCH 80 SEAMLESS PIPE, TYPE 316		

NOTES:

1. See Bill of Materials attached to the IWP for a complete material list and for storage locations
2. QA piping boundary is shown at AF-4007 All supports are QA.
3. Perform visual inspections of the root pass on all Butt welds and on the finished surface of all welds.
4. NDE requirements are called out in the IWP.
5. Do not attach the sockolet or half coupling during pre-fabrication work
6. Weld per qualified Contractor weld procedures

FOR INFORMATION ONLY

SK-AFW-008/88-099

REFERENCE DRAWINGS

MICROFILM NO.

CDS FILE W23028

WISCONSIN ELECTRIC

AUX. FEEDWATER
P. 39A RECIRCULATION LINE TO CST
PIPING ISOMETRIC
POINT BEACH N.P. UNIT 31

D SK-AFW-008/88-099

04/15/91

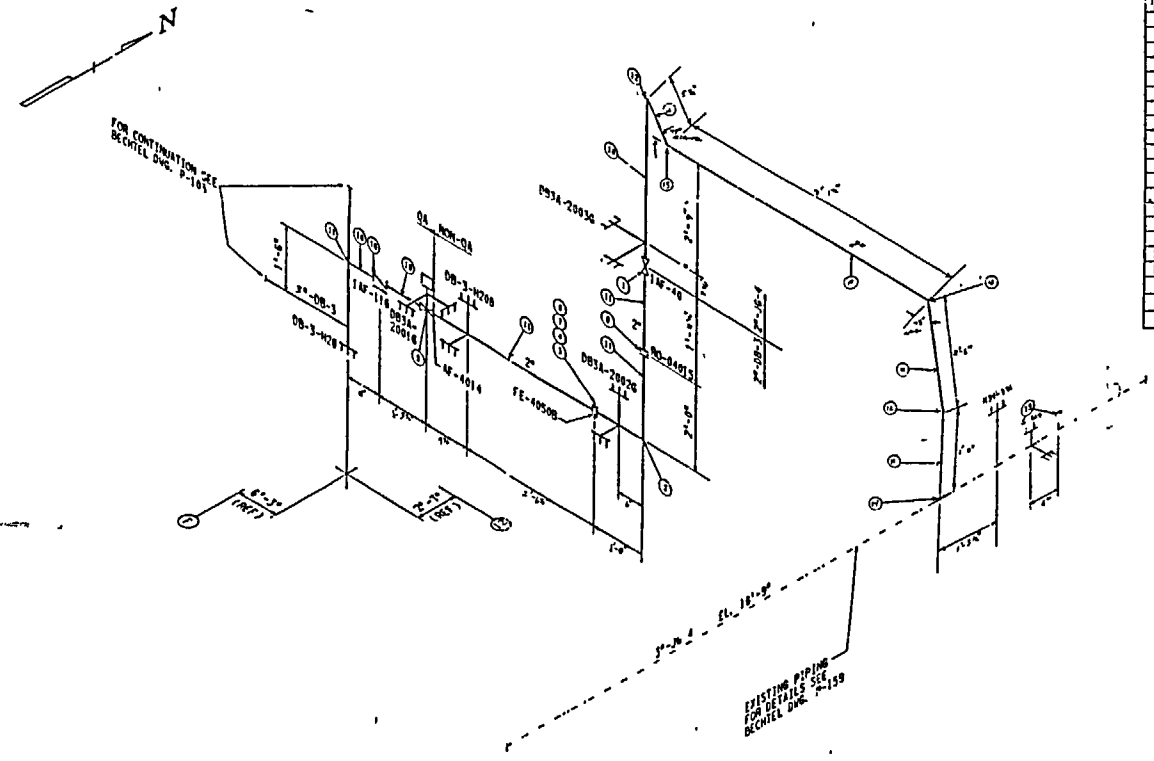

BILL OF MATERIAL

ITEM NO.	QUAN.	DESCRIPTION	MAT'L.	VENDOR/CATALOG NO.
1	1	2" 1500# GLOBE VALVE		-
2	1	2" SCH 80 90° ELL (SW) TYPE 304	A182	
3	1	FLOW ORIFICE FLANGE	304 SS	
4	1	FLOW ORIFICE PLATE	316 SS	
5	1	2" 1500# CONTROL VALVE	SS	ID#2IA88RG
6	1	FLOW RESTRICTING ORIFICE	304 SS	P/N 125885-CH
7	1	FLOW X-MITTER W/INTEGRAL DISPLAY		#1151DP-5-S-22-B1-M4
8	1	6"X6"X4" ELECTRICAL ENCLOSURE		#1414PHE
9	1	TRANSMITTER POWER SUPPLY		P/N 49-15-401
10	20FL	2" SCH. 40 SEAMLESS PIPE, TYPE 304L	A312	
11	15FL	2" SCH. 80 SEAMLESS PIPE, TYPE 304L	A312	
12	4	2" SCH 40 90° ELL (SW) TYPE 304	A312	
13	2	2" SCH 40 45°, ELL (SW) TYPE 304	A312	
14	1	2"X3" HALF COUPLING, TYPE 304	SS	
15	1	1½" SCH 40 CAP (SW) TYPE 304		
16	1	2" 1500# CHECK VALVE, PISTON TYPE	TYPE316	FIG #3674F316J
17	1	3"X2" 3000# SOCKOLET		
18	5 FL	2" SCH 80 SEAMLESS PIPE TYPE 316		

NOTES:

1. See Bill of Materials attached to the IWP for a complete material list and the storage locations.
2. QA piping boundary is shown at AF-4014 All supports are QA.
3. Perform visual inspections of the root pass on all Butt welds and on the finished surface of all welds.
4. NDE requirements are called out in the IWP.
5. Do not attach the sockolet or half coupling during pre-fabrication work
6. Weld per qualified contractor weld procedures.

FOR INFORMATION ONLY

SK-AFW-009/88-099

REFERENCE DRAWINGS

MICROFILM NO.

CDS FILE W23029

WISCONSIN ELECTRIC

AUX. FEEDWATER
P. 38B RECIRCULATION LINE
TO CST
PIPING ISOMETRIC
POINT BEACH N.P. UNIT 31

D SK-AFW-009/88-099

8-12 91

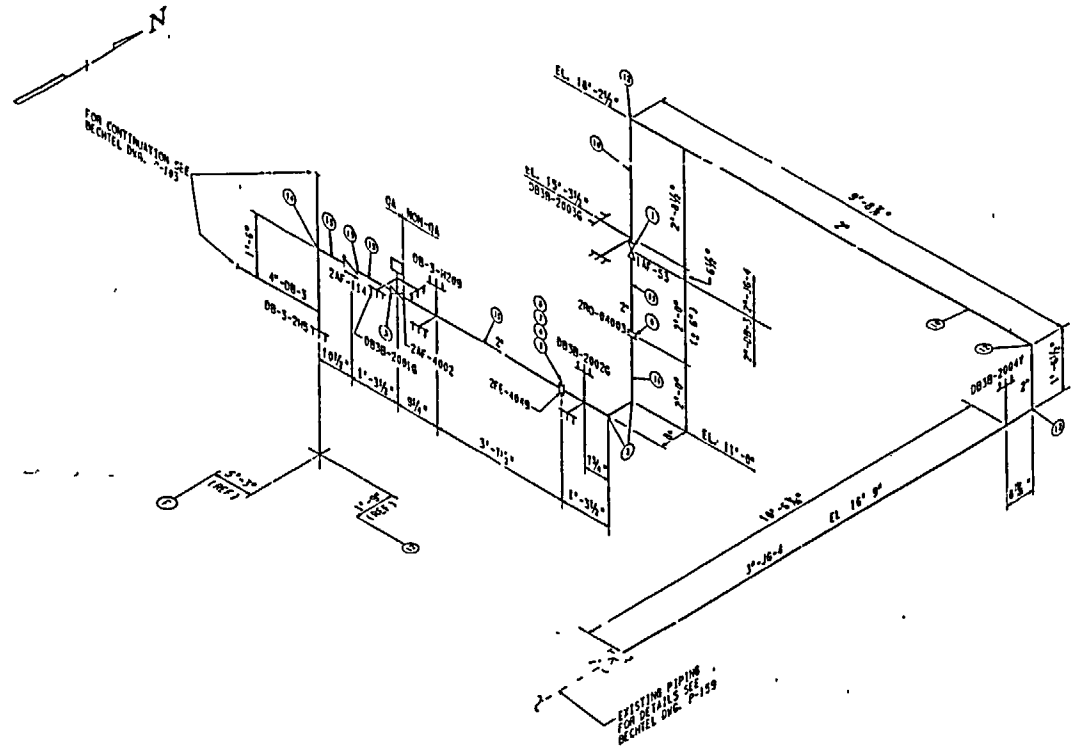

BILL OF MATERIAL

ITEM NO.	QUAN.	DESCRIPTION	MAT'L.	VENDOR/CATALOG NO.
1	1	2" 1500# GLOBE VALVE		
2	2	2" SCH 80 90 ELL (SW) TYPE 304	A182	
3	1	FLOW ORIFICE FLANGE	304 SS	
4	1	FLOW ORIFICE PLATE	316 SS	
5	1	2" 1500# CONTROL VALVE	SS	ID#21A88RG
6	1	FLOW RESTRICTING ORIFICE	304 SS	P/N 125885-CH
7	1	FLOW X-MITTER W/INTEGRAL DISPLAY		#115,DP-5-S-22-B1-H4
8	1	6"X6"X4" ELECTRICAL ENCLOSURE		#1414PHE
9	1	TRANSMITTER POWER SUPPLY		P/N 49-15-401
10	20 ft	2" SCH. 40 SEAMLESS PIPE, TYPE 304L	A312	
11	15 ft	2" SCH 80 SEAMLESS PIPE, TYPE 304L	A312	
12	3	2" SCH 40 90° ELL (SW) TYPE 304	A312	
13	1	2" 1500# CHECK VALVE, PISTON TYPE	TYPE316	FIG #3614F316J
14	1	4"X2" 3000# SOCKOLET	—	
15	5 ft	2" SCH 80 SEAMLESS PIPE, TYPE 316		

NOTES:

1. See Bill of Materials attached to the IWP for a complete material list and for storage locations
2. QA piping boundary is shown at 2AF-4002. All supports are QA.
3. Perform visual inspections of the root pass on all Butt welds and on the finished surface of all welds.
4. NDE requirements are called out in the IWP.
5. Do not attach the sockolet or half coupling during pre-fabrication work
6. Weld per qualified contractor weld procedures

FOR INFORMATION ONLY

SK-AFW-010/88-099

REFERENCE DRAWINGS

MICROFILM NO.

CSR FILE W23030

WISCONSIN ELECTRIC

AUX. FEEDWATER
2P29 RECIRCULATION LINE TO CST
PIPING ISOMETRIC
POINT BEACH N P. UNIT 2

D S.K.-AFW-010/88-099