CHAPTER 57

FIRE RISK ASSESSMENT

57.1 Introduction

This chapter contains the AP1000 PRA internal fire analysis for events at power. The analysis uses the same methodology as the AP600 PRA fire analysis, documented in the AP600 PRA Study (Reference 1), to estimate the plant core damage frequency (CDF) contribution from fire events at power. The qualitative analysis in the AP600 PRA Study is reviewed and modified depending on the changes in the design (changes in fire areas, in components within fire areas, in combustible loadings, etc.). After the analysis, the fire scenarios are reviewed and modified, as needed, so that a set of best estimate fire scenarios is defined. The AP1000 PRA plant CDF model for internal events is used to calculate the conditional core damage probabilities (CCDPs) for the best estimate scenarios.

The first step is to find the equivalence between the fire areas of the AP600 study and the AP1000 to be able to use the information provided in the AP600 study; Tables 57-1 and 57-2 give the matching results. Section 57.3 documents the fire areas and their fire initiating event frequencies. Section 57.4 develops fire scenarios for the fire areas and calculates their frequencies. For these scenarios, Section 57.5 provides the calculations for the conditional core damage probabilities, from the base AP1000 PRA plant CDF model. Section 57.6 calculates and discusses the CDF from the fire scenarios. Section 57.7 provides sensitivity analysis studies for the most sensitive parameters. Section 57.8 discusses the results.

The AP600 PRA fire analysis was performed for three different plant locations:

1. The plant, except the containment and the main control room
2. The containment
3. The main control room

The AP600 fire analysis for the main control room (MCR) is reviewed to assess its applicability to the AP1000. The same scenarios were kept, but spurious actuation of ADS valves is no longer assumed. The AP600 MCR fires were found to be an insignificant contributor to the plant risk (CCF from MCR fires = 7.7E-11/year). For the AP1000 MCR design, the risk induced by fire is lower and may be considered negligible, including a conservative assumption on human error probability (HEP).

57.2 Qualitative Analysis

This section reviews the qualitative fire analysis steps used for the AP600 PRA fire analysis and the qualitative fire analysis steps for the AP1000 PRA internal fire analysis.

57.2.1 AP600 Qualitative Analysis

The purpose of the qualitative analysis is to identify the boundaries of the plant fire areas and, if necessary, their respective compartments, and to identify the location of fire-susceptible equipment and cables within the areas that, if damaged by fire, could cause a plant shutdown

and degradation of shutdown paths identified in the AP600 PRA. This information is used as a basis for systematically screening out fire areas from further consideration if a fire originating in these areas is not postulated to damage any PRA-credited accident mitigating equipment. Plant shutdown and degradation of shutdown paths can happen either due to damage to the equipment located in the area or as a result of damage caused by propagation of the fire to an adjacent area. Further use of this information is made during the quantitative analysis.

The qualitative screening analysis performed for AP600 consisted of the following steps:

- **Step 1**

  Plant fire areas were identified using the EPRI's FIVE methodology (Reference 5) definition of a fire area, referencing information provided in the AP600 Standard Safety Analysis Report (SSAR) (Reference 3) Table 9A-6 and Appendix 9A fire area drawings.

  Fire areas presented in this analysis correspond directly to the fire areas defined in the AP600 SSAR, Appendix 9A, with one exception: the Radwaste Building was analyzed as a single location, and fire areas in this building were not broken out.

- **Step 2**

  Using fire area drawings and discussions with design engineers, the plant's fire areas were divided into the following types:

  1. Totally Safety-Related Fire Areas (TSFA)
  2. Mixed Safety-Related Fire Areas (MSFA)
  3. Non-Safety-Related Fire Areas (NSFA)

- **Step 3**

  A list of safety-related and nonsafety-related systems that can bring the plant to a safe and stable shutdown condition was developed using the information provided in Sections 6.3, 7.4, and 15 of the AP600 SSAR, and in Chapters 4 and 6 of the AP600 PRA.

  Note that in this bounding fire analysis for at-power and shutdown operations, when calculating the conditional core damage probabilities (CCDP), only the safety-related systems that can bring the plant to, or maintain it in, a safe and stable shutdown condition were credited. This analysis uses the same bases as the focused probabilistic risk assessment (PRA) sensitivity study.

- **Step 4**

  The data provided in Appendix 9A of the AP600 SSAR was used to identify safety-related Safe Shutdown Divisions (SSD) that could be affected by a fire in each TSFA.

- **Step 5**

  The data provided in Appendix 9A of the AP600 SSAR, discussion with design engineers, and plant arrangement drawings were used to identify safety-related safe shutdown components that could be affected by a fire in each MSFA.

- **Step 6**

  Plant arrangement drawings, design basis philosophies for separation of the components and cabling associated with the safety and nonsafety-related systems, and interviews with plant designers were used to identify the nonsafety-related shutdown equipment that could be affected by a fire in each MSFA and NSFA. This represents the set of nonsafety-related PRA-credited shutdown systems with components and/or power, control, or instrumentation cables routed through the fire area under consideration.

- **Step 7**

  Using the information obtained in Steps 4, 5, and 6, a summary of the shutdown systems disabled or degraded in each fire area or fire compartment was developed.

- **Step 8**

  The potential for fire propagation across fire area boundaries was considered for all fire areas. The AP600 fire areas are bounded by barriers that withstand the fire hazards within the fire area and, as necessary, protect important equipment within a fire area from a fire outside the area. In this analysis it was assumed that fire propagation across a fire area boundary could occur:

  - If the integrity of a fire area boundary had been compromised by a previously undetected barrier element failure (for example, penetration seal failure), and

  - If the fire suppression activities in the exposing fire area failed to contain the fire within the area.

  In assessing the probability and impact of fire propagation, the following ground rules were followed:

  - Fires originating in a fire area (exposing fire area) could only propagate to an adjacent fire area (exposed fire area), and no further propagation beyond the exposed fire area was considered to be credible.

  - Simultaneous fire propagation from the exposing fire area to more than one adjacent fire area was not considered credible.

  - Fire propagation from fire areas with less than 20,000 Btu/sq. ft. combustible loading was not considered credible on the basis that a significant fire cannot develop in the area.

- Fire propagation out of the containment fire area was not considered credible on the basis of very low combustible loading of the containment fire area.

- Fire propagation into the containment fire area from areas outside the containment fire area was not considered credible. The low combustible loading and the large volume of the containment preclude propagation with the potential to cause a damage-producing fire environment inside the containment. Thus, for this analysis, the consequences of propagated fires into the containment are considered bounded by the consequences of fire in the exposing fire area.

- **Step 9**

  In this step, the existence of a requirement for plant shutdown was determined. For fire areas with no credible propagation pathway, as determined in Step 8, the existence of a requirement for plant shutdown was determined assuming that all equipment and cables in the fire area were damaged. For fire areas where fire propagation was credible, the existence of a requirement for plant shutdown was determined assuming that the fire had propagated to an adjacent fire area and that all equipment and cables in both the exposing and the exposed fire areas were damaged. The fire-induced damage scenarios in which fire propagation to a given adjacent area would have the most severe consequences were selected as appropriate for further development.

  A requirement for shutdown was assumed unless it could be shown that the fire would not cause an automatic trip, or that plant operating conditions or violation of technical specifications would not require a shutdown within eight hours. This evaluation required consideration of several aspects of plant design and operation.

  A fire area was screened out from further analysis based on the following criteria:

  - If the fire was not expected to create a demand for safe shutdown under normal plant operating conditions, and if none of the PRA-credited equipment was considered damaged. (Note that it is not necessary to assume a loss-of-offsite power (LOOP), unless the postulated fire may induce such an event.)

  - If the fire was expected to cause a plant shutdown due to technical specification requirements but was not postulated to impact operability of any PRA-credited shutdown systems. This criterion was judged to be acceptable on the basis that the conditional core damage probability for initiating events that do not cause loss of any PRA-credited shutdown systems is very low (on the order of E-09 or below). Multiplying this low probability with the frequency of such events would give an even lower core damage frequency (CDF).

- **Step 10**

  For those areas not screened out, a qualitative assessment of the consequences of the fire was performed. As part of this qualitative evaluation, the consequences of different fire-induced cable failure modes (open or short) were considered.

Based on the review of the safe shutdown systems and equipment, in addition to subsections 9A.3.7 (Special Topics) and 9A.2.7.1 (Criteria and Assumptions) of Appendix 9A of the SSAR, spurious operations that could affect the ability to shut down the plant were identified. Active components (motor-operated valves, air-operated valves, etc.) were considered to spuriously operate. The component selection in Appendix 9A and this analysis is based on:

- A review of systems being utilized for shutdown to identify high-low pressure interfaces of any primary coolant boundary, and
- A review of systems to identify which spurious operations may interrupt system operations.

For areas where spurious operation was considered, two scenarios were developed for quantitative evaluation:

1. A scenario that assesses fire damage without the relevant spurious actuation(s).
2. A second scenario that includes such spurious actuations.

The quantitative analysis treats the second scenario probabilistically in these cases.

57.2.2 AP1000 Qualitative Analysis

Following are the AP1000 qualitative fire analysis steps:

- **Step 1**

  Identify a correspondence between the fire areas of the AP600 fire analysis and the fire areas of the AP1000.

- **Step 2**

  For the AP1000 fire areas that are identical to AP600, check whether the systems affected by fire in each area are the same. Base this determination on technical information included in the AP600 internal fire analysis, supplemented and updated to reflect AP1000 as described in the AP1000 Design Control Document (DCD) (Reference 2).

- **Step 3**

  For AP1000 fire areas that are new or very different from AP600, supplement the list of systems affected on the same basis.

- **Step 4**

  Check the combustible loading for all areas. A different combustible loading can lead to a propagation that was not previously possible.

Note:

For the AP600 qualitative analysis, all systems (safety and non-safety) were considered; however, they were not considered for quantification analysis.

Definition of fire areas and fire compartments as used in the AP1000 PRA internal fire analysis correspond to the fire areas defined in the AP1000 Design Control Document.

As described in the introduction, the goal is to adapt the AP600 fire analysis to the AP1000. An initial evaluation of the AP600 internal fire analysis and AP1000 Fire hazards analysis showed that many differences existed between AP600 and AP1000. The main reason is that the AP600 study is based on an early version of the AP600 design. However, because the AP1000 design is an evolution of AP600, these differences mainly consist in changes in numbering or, sometimes, in consolidating some of the fire areas.

The Annex Building is reviewed in more detail to capture the changes from the early AP600 design.

AP1000 fire areas were matched to the AP600 fire areas by using AP1000 fire zone and area drawings (Reference 2), the AP600 internal fire analysis and Attachment 57B of the AP600 PRA. The AP1000 DCD fire area descriptions were also compared against the AP600 qualitative analysis to assist in sorting out the fire areas.

57.2.3 AP1000 Fire Areas

Tables 57-1 and 57-2 list the AP1000 fire areas, their descriptions, the corresponding AP600 fire areas, whether or not the fire areas have been screened out, and an explanation of why the fire areas have been screened out.

57.3 Initiating Event Frequencies

This section contains the fire initiating event frequency calculations for fire areas that are not screened out in the previous phase. Tables 57-3, 57-4, and Section 57.3.5.2.3 contain the resulting fire area initiating event frequencies for the plant, containment, and main control room, respectively. The tables also include fire suppression systems in the fire areas.

57.3.1 Introduction

The first step of the quantitative analysis is to assess the fire initiation frequencies in the areas that were not screened out. The AP1000 fire ignition frequencies are based mainly on the results of the AP600 evaluation. Sensitivity studies are performed on various aspects of the AP1000 PRA internal fire analysis using the different fire ignition frequencies. Although the values slightly differ between AP600 and AP1000, the orders of magnitude between the two are the same. The total frequency of AP1000 fire events is higher (0.29 events/year) than the frequency that would be observed in a currently operating nuclear power plant.

57.3.2 Methodology

AP600 fire frequency calculations were performed using FIVE methodology and generic fire data information provided by the Fire Events Database (Reference 9). The approach required the analyst to weigh generic fire data according to the specific types and quantity of ignition sources present in the area being evaluated. FIVE provides detailed guidance for determining both "Location Weighing Factors" and "Ignition Source Weighing Factors" and a formalized documentation process for recording input data and calculating fire frequencies. The same fire ignition frequencies are assumed except in case of an obvious difference.

Fire ignition frequencies were obtained for AP1000 fire areas that are comparable to AP600. For AP1000 fire areas that significantly differed from AP600, new calculations were performed to obtain the fire ignition frequency. These calculations are provided in the comments and explanations following Table 57-3.

Table 57-3 also gives the availability of fire suppression capability for each area, expressed as an automatic fire suppression system, a manual fire suppression system, or no fire suppression system. No credit is conservatively taken in case of a manual fire suppression system. FIVE methodology provides the probability of failure for automatic fire suppression (see Table 57-6).

57.3.3 Results for Plant Except Containment and the Main Control Room

Table 57-3 gives the fire ignition frequencies for the areas of the plant that have not been screened out, except for the Containment.

57.3.4 Results for the Containment

Table 57-4 gives the fire ignition frequencies for the containment zones that have not been screened out.

57.3.5 Results for the Main Control Room

Because the design of the AP1000 Main Control Room (MCR) did not change, the AP600 evaluation is maintained. However, the AP600 results were checked and modified based on the different values in accordance with the design and the assumption for spurious actuation (see Attachment 57D).

The AP1000 MCR is designated as fire area 1242 AF 01 and is located at elevation 117' 6" in the Auxiliary Building. The area is subdivided into two fire zones: Zone 1242 AF 12401A is the main control area; and, Zone 1242 AF 12401B is the shift supervisor, clerk area, the kitchen and the operator area. The principal components are located in the main control area and these include the MCR workstations, controls and indications for plant operations, and Class 1E cable for the four electric power divisions.

In each of the fire zones, the boundaries have a fire rating of at least one hour, which is greater than the postulated fire duration in the area. The fire area itself is surrounded by 3-hour fire rated boundaries.

Since the MCR is continuously occupied, a fire is likely to be initially detected by an operator. Otherwise, a fire in this area is detected by a fire detector, which provides visual and audible alarms in the MCR and the central plant security station.

A hose station is located outside the fire area and portable extinguishers are provided for fire suppression. No automatic fire suppression systems exist in the area.

57.3.5.1 Alternate Shutdown Capability

A remote shutdown workstation is provided as an alternate to the MCR. The workstation room is located at the 100' elevation of the Auxiliary Building, in fire area 1232 AF 01. Transfer of operations from the MCR to the remote shutdown workstation is controlled by transfer switches located in fire area 1202 AF 05 (stairwell between the MCR and the remote shutdown workstation), which is the path between both areas. The AP1000 design calls for the control for the safe shutdown functions at the remote shutdown panel; therefore, given the loss of all control room functions, safe shutdown can be achieved at the remote shutdown workstation.

For small (incipient) fires, control is maintained in the MCR, since the potential for damage or spurious signals is limited. In the event of fires that require evacuation, control may be transferred to the remote shutdown workstation. In this event, the MCR functions are assumed to be lost, and safe shutdown is controlled from the remote shutdown workstation.

Once control is transferred, spurious control signals potentially caused by the control room fire can be isolated from the actuated devices by the transfer switches. The extent of the spurious signals is, thus, limited by the time to transfer control to the remote shutdown workstation, which is very short.

Cabling to the MCR is separated according to each of the four safe shutdown electrical divisions. The cables for each power division outside the MCR are either routed in separate fire areas or are protected by the equivalent of a 3-hour fire barrier. Therefore, pinch points do not exist in rooms carrying cables between the control room and the remote shutdown workstation, and fires confined to a single area will not disable more than one division of safe shutdown components. The exception to this case is in the control room where cables for all four electric power divisions can be found.

A fire in the remote shutdown workstation room will not affect plant operations since controls from this workstation are not normally activated. In addition, no spurious actuation signals are generated in the event of a fire in this area.

57.3.5.2 Fire Hazard Review

57.3.5.2.1 Combustibles

Table 9A-3 of the AP1000 DCD estimates that the combustible loading for a fire area is 1.4×10^8 Btu, with cable insulation (44 percent) and paper (39 percent) being the main contributors. Dividing the combustible loading by area (ft^2) of the fire area gives a value of 59,000 Btu/ft^2. For the MCR, the combustible loading is 8.1×10^7 Btu or dividing by the MCR area (ft^2) gives a value of 52,000 Btu/ft^2.

57.3.5.2.2 Nature of Main Control Room Fires

As mentioned above, the fire hazard combustibles in the MCR consist mainly of cable insulation within control cabinets, panels, and below the raised floor, as well as ordinary combustibles like operator manuals and other paper necessary for control room computer and instrumentation operation. Transient materials such as paper and rags may be brought into the area during normal operations, for normal facilities maintenance and repair, or during plant shutdown. Consistent with existing main control room fire analyses, the quantity of transient combustible materials that may be involved in area fires (and consequently, the magnitude of these fires and the resultant damage to plant facilities) is assumed to be controlled by limiting the introduction of transient combustibles through administrative procedures.

The extent of damage within and beyond the fire area is further limited by controlled removal of heat, smoke, and other combustion products. Fire dampers close automatically on high temperature to control the spread of fire and combustion products. Smoke and hot gases are removed from the fire area by reopening the fire dampers after a fire. The nuclear island non-radioactive ventilation system can be manually aligned to the smoke purge mode to exhaust smoke and hot gases to the atmosphere. Three-hour fire barriers enclose the fire area.

A worst-case fire postulated for the MCR assumes ignition and subsequent fire development in an electrical control cabinet. The probability for propagation of the fire to the next cabinet is small because the cabinets are physically separated. In addition, the MCR is continually occupied, facilitating early detection. This probability of fire propagation is further reduced by early detection provided by smoke detectors installed in the area. As such, manual fire response is initiated promptly. In addition, employees responding to the fire provide ready access to the area from adjacent plant areas, facilitating initial use of area fire extinguishers on incipient fires and supplemental use of hose lines on developing fires.

If the fire does grow beyond the incipient stage and propagate, and the MCR must be evacuated, the plant can be safely shut down from the remote shutdown workstation. The postulated fire for this area therefore does not impair the capability for safe shutdown.

57.3.5.2.3 Derivation of Main Control Room Fire Frequencies

Using the methods provided in the FIVE methodology and generic fire data provided in the Fire Events Data Base, the fire frequency for this area is estimated as 9.9×10^{-3} events per

year (sum of all potential contributors). With reference to the Ignition Source Data Sheet in the Quantitative Screening Analysis, contributors to this fire frequency are:

Control Room Ignition Sources	Frequency (events/yr)
Electrical cabinets	9.50E-03
Plant-Wide Ignition Sources	
Fire protection panels	4.00E-04
Junction Boxes	1.28E-05

The electrical cabinet fire frequency is based on 12 fires, which occurred in control rooms and were reported in the NSAC/178L Fire Events Data Base. Eleven were cabinet fires and one was a kitchen fire. None of the fires appears to have been of significant severity and all were extinguished (or self-extinguished) within a few minutes. No MCR fires to date have required evacuation of the MCR.

The above frequency for cabinet fires is slightly conservative because of the inclusion of the "kitchen fire" event. The AP1000 kitchen area fire zone has boundaries with fire resistance that exceeds the equivalent fire duration for this zone; thus, fire propagation to the main control area can be ruled out. However, to be conservative, a frequency of 9.5E-03 per year is used as the generic electrical cabinet-induced fires in main control rooms.

The remaining contribution to the ignition frequency evaluated for the MCR comes from plant-wide ignition sources. Reference 9 states that plant wide components are not generally applicable to the control room because the room is continuously occupied and the likelihood that a transient fire would not be detected and suppressed in its incipient stage is very small. Therefore, the contribution of plant-wide ignition sources to the MCR fire scenario frequencies is assumed to be insignificant. Thus, the control room ignition frequency is 9.5E-03 per year.

57.4 Development of Fire Scenarios

In this section, fire scenarios are developed by using event tree models. One event tree is developed for each fire area. Attachment 57C contains the event tree models. The event tree models are also used to calculate the fire scenario initiating event frequencies, which are then multiplied by the appropriate CCDPs to obtain the core damage frequency for each fire scenario.

The event trees address the following aspects of development of a fire scenario (Refer to Figure 57-1 for an illustrative event tree) to model and calculate scenario initiating event frequency:

1. Initiating Event Frequency

   This frequency is taken from Section 57.3 for each fire area.

2. Fire Suppression (See also Section 57.4.3)

   The failure of fire suppression in a fire area creates the possibility of fire propagation into a adjacent fire area. Success of suppression does not prevent damage to equipment in the fire area.

3. Fire Propagation (See also Section 57.4.2)

   If fire propagation occurs, a most consequential adjacent area is chosen as the target of propagation.

4. Spurious Actuation – Type 1 (See also Section 57.4.1)

   Spurious actuation of ADS Stages 1, 2, and 3 lines is considered, if applicable.

5. Spurious Actuation – Type 2 (See also Section 57.4.1)

   Spurious actuation of automatic depressurization system (ADS) Stage 4 lines is considered, if applicable.

The illustrative event tree represents the following fire area layout:

> Fire initiates in fire area XXX with a frequency of 2.0E-03/year. There is an automatic fire suppression system in the fire area. SYS-1 is damaged due to fire in the area, but does not cause a reactor trip. The most consequential adjacent fire area is YYY, which contains SYS-2 with potential ADS spurious actuation due to multiple hot shorts. If propagation into area YYY occurs, either a transient, medium loss-of-coolant-accident (LOCA), or a large LOCA is postulated, depending upon whether spurious ADS occurs or not. No special credit is taken for fire-related operator actions for this example.

Very few operator actions specific to fire scenarios are credited in the present model. If a scenario-specific credit is taken for a fire-specific operator action (one that is not credited in the base AP1000 PRA), it is explicitly discussed in the sequence model. (See also Section 57.4.4). The operator actions that are used or affected by the fire scenarios are discussed in Attachment 57B.

57.4.1 Spurious Actuation Model

In the AP600 study, on the basis of NUREG/CR-2258 (Reference 8), the probability of one spurious opening was 0.06. So, the probability of multiple hot shorts leading to the opening of one valve was 0.06 for an ADS Stage 1, 2, 3, or 4 valve, and this probability is used as a probability of spurious actuation of one circuit. Then, for the Stage 1, 2 or 3, if the spurious actuation is possible, the probability does not change. That is consistent with the fact that the design is the same. On the other hand, because the design of the ADS Stage 4 control is different and requires multiple circuits to be actuated, the probability of spurious actuation is lower. This is consistent with the AP600 assumption and with the design of the AP1000.

Reference 10 concludes to a risk of hot shorts involving conductor-to-conductor with a probability of 0.05 for multi-conductor cables with shield and drain arrangements. On AP1000, all the ADS cables have grounded shields. The probability of 0.06 used, is in the same order of magnitude. It is also conservative, because it gives the probability of multiple hot short of proper polarity that may lead to a spurious actuation; but the spurious actuation depends also on the duration and the impedance of the hot shorts.

57.4.1.1 Spurious Actuation of ADS Valves inside the Containment

Stage 4 Valves

As described in Attachment 57D, spurious actuation is not credited due to fire in the sensor cables. This is because the fire must affect two divisions and the spurious signals must be in a valid impedance range. It also requires several spurious signals, first to actuate the CMTs and then the low level signals and so on. This means a probability of under 0.06 x 0.06 x 0.06 x 0.06.

It is assumed that there is no possibility of spurious actuation of one squib valve due to a fire inside the containment The squib valves' cables, classified as instrumentation, cannot get sufficient power from other instrumentation cables in case of a hot short. In case of fire in the ADS Stage 4 valve zones, it is assumed that the fire can not ignite the propellant; it burns but does not explode.

ADS Stage 1, 2, 3 Valves

For the AP600 study, on the basis of NUREG/CR-2258, the probability value used for one spurious ADS valve opening was 0.06. For AP1000, four hot shorts are needed to create a spurious actuation of one valve. However, two hot shorts are between four conductors inside one wire. That means these hot shorts are more probable. It is conservatively assumed that the probability of spurious actuation of one ADS Stage 1, 2, 3 valve opening is the same as that used for AP600. Whenever the cables of an electrical division are damaged the probability of a spurious ADS actuation is assumed to be 0.06 x 0.06.

57.4.1.2 Spurious Actuation of ADS Valves Due To Fire in the MCR

Dedicated Safety Panel Switches

As described in Attachment 57D, a spurious actuation of ADS valves can only occur in the case of a fire propagating to the MCR when the operating team does not switch off the MCR after evacuation. It is so unlikely that the possibility of spurious actuation is not credited in this situation. After the MCR has been switched off, no order (even spurious order) is taken into account by the control logic.

DAS Panel

If a fire starts in the diverse actuation system (DAS) panel, which is very unlikely because there is normally no power within the panel, there is no possibility of spurious actuation (there is no power). If the fire starts in the operating desk and there is a risk of propagation to

the DAS panel despite the distance between these two components, it is very unlikely that the operating team will not evacuate the MCR before the fire propagates. The operating team switches off the DAS panel while on route to the remote workstation, the power is removed from the panel, and the possibility of spurious actuation of ADS valves is averted.

Note: The protection against spurious actuation is the same for in-containment refueling water storage tank (IRWST) injection, Containment recirculation/IRWST dump to containment, and for normal residual heat removal system (RNS) isolation.

In conclusion, any significant spurious actuation of ADS valves is not credited due to a fire in the MCR.

57.4.1.3 Spurious Actuation of ADS Valves in the Plant (except the containment and the MCR)

I. Spurious Actuation of ADS Valves Due To a Fire in One 1E Division of Power and Control

Stage 4 Valves

As described in Attachment 57D, spurious actuation is not credited due to a fire in the sensor cables. This is because the fire must affect two divisions and the spurious signals must be in a valid impedance range. It also requires several spurious signals, first to actuate the core makeup tanks (CMTs) and then the low level signals and so on. This means a probability of under 0.06 x 0.06 x 0.06 x 0.06.

The sequence to get a spurious actuation of one ADS Stage 4 valve from a fire in one power and control division cable from protection and safety monitoring system (PMS) to squib valve controller cabinet is very specific. The probability should be very low. It is assumed that the arm circuit must be spuriously actuated then spuriously deactivated then the firing circuit must be spuriously actuated. The probability of spurious actuation of one ADS Stage 4 valve is then conservatively assumed to be 0.06 x 0.06 x 0.06.

Spurious actuation of one ADS Stage 4 valve due to a fire in manual actuation cables requires spurious actuation of two circuits. The probability is assumed to be 0.06 x 0.06.

Note: Division A is separated into 2 areas, 1202 AF 04 (Division A Electrical Equipment/Battery Room/I&C Room) and 1242 AF 02 (Division A Penetration Area). For this division, spurious actuation of Stage 4, induced by damages to manual control's cables is applied only to area 1242 AF 02.

ADS Stages 1, 2, 3 Valves

Spurious actuation of two ADS Stages 1, 2 and/or 3 valves is needed to get a spurious LOCA. The probability is assumed to be 0.06 x 0.06.

II. Spurious Actuation of ADS Valves Due to a Fire in Areas Other than Division Rooms

Spurious actuation is not credited due to fire in sensor cables, because this fire must affect two divisions and the spurious signals must be in a valid impedance range. It also requires several spurious signals, first to actuate the CMTs, then the low-level signals and so on. That means a probability less than 0.6 x 0.6 x 0.6 x 0 6.

ADS Stage 4 Valves

The only way to get a spurious actuation of ADS valves is from a fire in the DAS manual actuation cables. As for power & control division cables from the PMS to the squib valve controller cabinet, the sequence in hot shorts to get a spurious actuation is very specific and the probability should be very low. There are four pairs of cables that run from the MCR to the non-1E Penetration Room (1230 AF 02) passing through the corridor 1200 AF 03. The probability of spurious actuation of one Stage 4 is conservatively assumed to be 0.06 x 0.06 x 0.06.

ADS Stages 1, 2, 3 Valves

There is no possibility of a spurious actuation of ADS Stage 1, 2 or 3 valves.

57.4.1.4 Other Spurious Actuation

As described in the fire hazards analysis presented in the AP1000 DCD, the only other possibility of spurious actuation concerns the opening of the reactor vessel head vent valves. This action may lead to a LOCA scenario. However, because the risk of spurious actuation of the ADS Stages 1, 2 or 3 systematically takes into account that the 1E-electrical cables are damaged, the risk of a LOCA caused by the reactor vessel head vent is already covered.

57.4.2 Propagation Model

57.4.2.1 Outside the Containment

Fire doors, piping or cable penetrations, and ventilation ducts are major fire propagation pathways. To assign a failure probability for any given fire barrier, generic failure data pertaining to the fire barrier elements and relevant plant-specific data (for example, number of doors) have to be known. The generic failure data can be obtained from many sources including NUREG/CR-4840 (Reference 4), which is presented in Table 57-5.

The barrier-specific failure probability can be obtained by determining the total number of each element in the barrier, multiplying by the corresponding failure probability, and summing the contributions from different elements. However, according to the assumptions made in AP600 and also applicable to AP1000, the total failure probability of a barrier (independent of the type of element and number of elements in each barrier) is assumed to be 0.01. This is considered to be a realistic value since, as presented in Table 57-5, failure probability of a barrier is dominated by the fire door failure probability. It is also a conservative value for fire barriers without doors.

Unlike early fire door designs, which contribute to the NUREG/CR-4840 data, the AP1000 fire doors are designed to have alarms that annunciate in the control room if they were to be left open. Thus, for the AP1000 design, the probability of a fire door being left open, facilitating fire propagation is expected to be less than 7.40E-3.

However, in some cases, after a specific examination (showing, for example, there is no penetration, no door in the fire barrier), it may be assumed that there is no possibility of propagation through a fire barrier.

A fire barrier is not credited in case of a highly combustible loading (>80000 Btu/sqft) and/or if the automatic fire suppression system fails.

57.4.2.2 In the Containment

The combustible loading in the containment zones are generally very low. The design philosophy is to avoid propagation by having a certain distance between combustible materials. In consequence, it is assumed:

- No propagation from one zone to another zone in case of combustible loading under 20000 Btu, and
- A propagation with a probability of 0.01 from the two zones that have a combustible loading above 20000 Btu to all the adjacent areas.

57.4.3 Fire Suppression Model

Automatic fire suppression failure probabilities are based on the values given by the FIVE methodology. Table 57-6 gives the unavailability probabilities for automatic fire suppression systems. No credit is taken for manual fire suppression.

57.4.4 Operation Actions

Human actions on controlling a fire are not usually credited. However, in comparison to the AP600 study, two human actions have been introduced to reflect the design of the AP1000.

One containment fire zone (1100 AF 11300B) has an automatic fire suppression system that requires, during at-power operations, to have a fire water supply valve external to the Containment to be manually opened prior to initiating the fire suppression system. The probability of failure is estimated at 0.03 (see Attachment 57B).

The design of the 1E-division areas is such that it allows switching off the power in case of a fire, to avoid a spurious actuation of ADS valves, before the fire propagates in the area. This value is also estimated at 0.03 (see Attachment 57B).

Actuation of ADS Stage 4 valves manually by DAS, in some scenarios, has been implicitly assigned a lower value than that used in the base AP1000 PRA. This subject is discussed in Attachment 57A.

As a sensitivity study, the manual fire suppression is evaluated and credited. This sensitivity case leads to a more representative result. In operating plants, in most cases fires are manually extinguished before severe consequences can develop.

57.4.5 Development of Fire Scenarios

For each fire area, one or more fire scenarios are developed based on the following:

- Safety related and non-safety related equipment failures,
- Existence or lack of automatic fire suppression,
- Fire barriers and possibility of fire propagation beyond the fire area,
- and, the possibility of hot shorts that may lead to spurious ADS actuation.

In general, in the AP1000 internal fire analysis, four scenarios were considered for each fire area when no automatic suppression exists. Two of the scenarios deal with the consequences of fires that could be confined in the area, and two scenarios consider the consequences of fires propagating outside the area (if propagation had been found to be credible). In each set of propagating and non-propagating scenarios, in turn, the potential consequences of different cable failure modes (open and short) were evaluated. In summary, for each fire area, the following scenarios were considered:

- Scenario 1 – Fire is confined in the area and disables all the equipment located in the area (only open circuit failure modes were considered).

- Scenario 2 – Fire is confined in the area, disables all the equipment in the area, and causes safety significant hot short events.

- Scenario 3 – Fire propagates outside the area (if propagation was found to be credible) and disables all the equipment in the fire area and in adjacent fire area where the fire propagated.

- Scenario 4 – Fire propagates outside the area, disables all the equipment in the fire area and in the adjacent fire area where the fire propagated, and causes safety significant hot short events.

Note: For some areas, more scenarios are used to avoid introducing too many conservatisms in the Core Damage Probability evaluation. Particularly, for the Scenarios 2 and 4, a difference is made between spurious actuation of Stage 1, 2, 3 and Stage 4.

Based on the equipment located in each area and the fire propagation potential, one or more of the above scenarios were dismissed from further considerations. For example, for fire area 1200 AF 01, only the first and third above listed scenarios were considered to merit further analysis. That is, based on the equipment and cabling located in the area, a fire-induced hot short in the area was not considered to be safety significant. Additionally, fire propagation was considered to all fire areas with interconnecting pathway to the 1200 AF 01 fire area. However, only the consequences of fires propagating to an area with the potential to cause the most severe damage were found to merit further consideration.

Note: Propagation (in case of sufficient combustible loading) is finally considered to the area that leads to the worst scenario independently of the existence of penetrations, except where this assumption is too severe.

The fire areas where there is automatic suppression equipment are listed in Table 57-3. The failure probabilities of automatic suppression equipment are shown in Table 57-6. When automatic suppression exists but not in all zones of one area, a specific study to take it into account is developed.

Tables 57-7 and 57-8 show the fire scenarios developed for AP1000, with the equipment failures due to fire damage, for the plant and the containment. This table is a summary of the event trees developed for each area in the Attachment 57C. These event trees describe in detail all the fire scenarios for each fire area or fire zone.

A fire scenario is associated with a fire area, based on a qualitative fire analysis as defined in the AP600 internal fire analysis. An AP1000 fire area analysis is made to determine if either the same fire area exists as is in the AP600 analysis or if the fire area could be composed of more or less than one AP600 fire area.

If a fire area is new or has been changed in the AP1000 design, then these changes are used to define the fire area. The possibility of propagation of fire from one area to an adjacent fire area was reviewed for each AP1000 fire area based on the new combustible loadings. Propagation was assumed to happen from one area to only one other adjacent area. The worst case of propagation, in term of loss of systems, was chosen to occur.

57.4.5.1 Fire Scenarios in the Plant Except the Containment and the Main Control Room

Table 57-7 presents the fire scenarios in the plant (except the containment and the MCR).

57.4.5.2 Fire Scenarios In the Containment Building

FIVE methodology states that there is a low probability that a fire may occur in the Containment Building during operation. For this reason, a quantitative fire analysis is not required. However, a qualitative analysis is considered to determine the behavior of a postulated fire. Table 57-8 presents the fire scenarios in the containment.

57.4.5.3 Fire Scenarios in the Main Control Room

The general philosophy for fire evaluation of the MCR follows the approach suggested in Reference 6. It is similar to that adopted in other areas but differs in two respects:

- Regardless of the level of damage that is actually sustained as a result of a fire, the production of smoke may necessitate the evacuation of the control room. Under such circumstances, the operators isolate the MCR and shut down the plant using the Remote Shutdown Workstation.

- Detailed fire propagation will not be performed since there are no acceptable models for modeling propagation within and from cabinets. Instead, it is assumed that cabinet fires in the MCR will not spread from the confines of the cabinet in which they originate, assuming that the cabinet has solid metal or fire-resistant boundaries. This supposition is supported by the results of the Sandia cabinet fire test (Reference 7), in which all test fires were self-extinguished, and by the reports of Main Control Room fires in the database.

The evaluation of MCR fires requires the analyst to identify those cabinets or combination of connected cabinets in which enclosed fires might cause significant degradation of accident mitigating systems. Fire scenarios in such cabinets are evaluated individually.

The methods used for frequency analysis, propagation analysis, and suppression analysis are discussed in the following subsections.

57.4.5.3.1 Fire-Induced Equipment Failures for Enclosed Cabinet Fires

The technique used to determine the effects of fire-induced equipment failures for enclosed cabinet fires includes the following steps:

- **Step 1:** Determine, which of the cabinets are considered critical

  Typically, these are those that degrade any safety-related system required for shutdown. For AP1000, it is assumed that the only significant cabinets are the two Reactor Operator panels, two dedicated safety panels, and the senior reactor operator (SRO) panel. In addition, there is an overview mimic panel along the wall facing the control panels.

  The two Reactor Operator panels are totally redundant, and they each contain all the software and multiplexer control switches. The SRO panel provides a third level of redundancy to the Reactor Operator panels. However, this panel would normally be used for indication-type functions only, with the control functions being locked out.

  The two dedicated safety panels contains the hard-wired controls like those for reactor trip, startup blocks and permissives, manual passive residual heat removal (PRHR) actuation, manual steam line and feedwater isolation, manual safeguards signal, containment cooling actuation, containment isolation, and ADS actuation.

  The wall panel is basically a display and is used for indication purposes only. Because of the redundancy provided by the Reactor Operator panels and the SRO panel, the unavailability of the wall panel will not be risk-significant, and therefore, the unavailability of the panel will not be considered further in this analysis, although it is considered as a contributor to initiators in the control room evaluation.

- **Step 2:** Determine the likelihood a fire will occur in a critical cabinet.

  Electrical cabinet fire frequency was reported in the AP600 internal fire analysis as being 9.50E-03 events/yr. This value was based on a study, reported in the Fire Events

Data Base (Reference 9), that involved a total of twelve fires that had previously occurred in MCRs. Of these twelve fires, eleven fires were cabinet fires and one fire was a kitchen fire. None of the fires appeared to have been of significant severity and all were extinguished (or self-extinguished) within a few minutes. No control room fire required evacuation of the control room.

The AP1000 kitchen area design, being similar to the AP600 kitchen area design, has boundaries with fire resistance that exceeds the equivalent fire duration for this zone; thus, fire propagation to the MCR can be ruled out. Therefore, the 9.50E-03 events/yr. frequency for cabinet fires is slightly conservative because of the inclusion of the "kitchen fire" event. However, to be conservative, that particular fire frequency is used as the generic cabinet-induced fire for MCRs.

Reference 9 was based on "conventional" control rooms, which typically contain between 30 to 40 electrical cabinets. Then taking the average of 35 cabinets per typical control room, the ignition frequency per cabinet is approximately 3E-04 per year.

A difference between control rooms at conventional nuclear power plants and the AP1000 is the predominance of low-voltage cabling at AP1000. The majority of cables in the AP1000 MCR are 48V 10 mA DC cables. The only higher-energy sources (125 VDC or 110 VAC) are the power sources, and an estimate calls for a total between 4 and 10 of such cables. In comparison, an estimate of between 500 to over 1000 125V DC and AC cables are present in control rooms of conventional plants. Based on Westinghouse calculations for an MCR similar to the AP1000 MCR, it can be shown that these low-voltage cables do not produce enough energy to heat up the cables, thus, ignition is very improbable.

Even with the use of low-voltage cables, it is conservatively stated that cable ignition is possible. However, to take credit for the additional safety afforeded by the AP1000 design, a reduction by a factor of 10 is taken from the generic cabinet fire frequency (3E-04 x 0.1 = 3E-05 per year). This reflects the small (but non-zero) probability of contribution from the power sources and from other ignition sources.

- **Step 3:** Determine how severe a fire would have to be to fail the critical functions supported by a cabinet.

  It is assumed that once a fire progresses beyond the incipient stage, all the equipment in the cabinet where the fire originates fails.

  Based on historical experience, all 12 control room fires in the Fire Events Data Base were extinguished before the fire reached a level capable of causing significant damage. For the purposes of this evaluation, it is arbitrarily assumed that the next fire to occur is more severe. Using this assumption, the frequency of control room fires progressing beyond the incipient stage can be estimated as 1/13 = 0.077. This value is assigned as the conditional probability of a fire "progressing beyond the incipient stage."

57.4.5.3.2 Adverse Effects of Smoke

To account for the effects of smoke, the following considerations are made:

1 Level of smoke that impairs the effectiveness of the operators, and the likelihood that this amount of smoke is generated by a cabinet fire.

The Sandia cabinet fire tests (Reference 7) indicated fires were self-sustaining and produced sufficient quantities of smoke to cause visual impairment. All of the fires in the database were small, but this may have been because they were extinguished early. Since there are no tools available for assessing smoke production and the evidence from the historical fires is not conclusive, it is assumed that any fire is capable of producing sufficient smoke if allowed to continue burning for a sufficient period of time.

2. The amount of time available between suppressing the fire, before the smoke concentration reaches the level of visual impairment, and the time at which the operators evacuate the control room.

At a ventilation rate of one room change of air per hour (800 cfm), Sandia tests performed in a simulated control room of 48,000 ft^3 indicated that about 15 minutes are available before the control board is obscured. A high ventilation rate test (8 room changes per hour, or 6400 cfm) indicated that about 30 minutes are available before the control board is obscured. The typical AP1000 ventilation rate is expected to be between one and eight room changes per hour, therefore, the time to control board obscuration can be assumed to lie within the 15-30 minute range. For conservatism, the lower value was used, and the control room operators are assumed to be forced to leave the control room due to smoke buildup no later than 15 minutes into the fire scenario for fires that are not suppressed by that time.

3. Probability of detection and suppression prior to smoke level reaching level of visual impairment.

The control room is protected by smoke detectors located throughout the fire area, and the control room is continuously occupied It is therefore reasonable to expect that a fire would be detected very quickly, most likely well before developing beyond the incipient stage.

To estimate the probability of control room evacuation due to smoke visual impairment, a methodology described in Reference 6 was combined with existing control room fire data (Reference 9). The model used to interpret operator response is EPRI's Human Cognitive Reliability correlation for interpreting measured operator action times in the control room. The model fits the fire duration to a lognormal curve to estimate the probability for failure to successfully act (here, failure to suppress the fire) for times greater than those observed. The overall probability of non-suppression within the 15-minute time window using this methodology is 0.0034.

57.4.5.3.3 Assumptions Regarding Control Room Evacuation

1. Control room evacuation is proceduralized for fires that disable sufficient indication or control functions or for fires where smoke generation impairs operator effectiveness. It is assumed, for this analysis, that evacuation occurs for any fire that grows beyond the incipient stage.

2. It is assumed that smoke generation due to fires in any other area of the plant or from fires external to the plant requires no evacuation of the control room personnel.

57.4.5.3.4 Fire Scenario Identification and Frequency Determination

The effect of fires affecting control room cabinets is summarized by the scenarios described in the following subsections.

It should be noted that fire propagation between cabinets is not explicitly modeled in these scenarios. This propagation only occurs if the fire progresses beyond the incipient stage. However, as noted in the subsections below, scenarios that involve fire growth conservatively assume control room evacuation and safe shutdown control from the remote shutdown workstation. Since safe shutdown control functions present in the control room are also present in the remote workstation, the failure of any number of control room functions is modeled in the same fashion.

57.4.5.3.5 Scenario CR1 – Fire in a Cabinet with no Growth beyond the Incipient Stage

In this scenario, fire growth does not progress beyond the incipient stage. These fires initiate at a cable and are extinguished (either self-extinguished or by operator actions) before enlarging and spreading to other cables. Therefore, the impact of these types of fires is considered to be limited to the loss of function provided by one component. If the damage can be confined locally to the site of the overload, which is in fact the most likely situation given historical experience with control room fires, the resulting impact is bounded by the random failure of the component itself, which has already been accounted for in the internal-events PRA. Thus, the contribution of this scenario to the fire-induced core damage frequency is insignificant.

57.4.5.3.6 Scenario CR2 – Fire beyond the Incipient Stage in MCR

In this scenario, a fire in the MCR grows beyond the incipient stage, such as in a Reactor Operator panel or a Senior Reactor Operator panel. All functions in the affected cabinet are assumed to be unavailable. Although sufficient redundancy is available from the two other unaffected panels, control room evacuation is assumed due to effects of smoke or the operator interpretation of the evacuation procedures. Prior to evacuation, the operator is assumed to trip the reactor from the control room. Shutdown is controlled from the remote shutdown workstation.

The frequency for this scenario is estimated conservatively by the following bounding calculation for all MCR cabinets:

Ignition frequency = 9.5E-03/yr
Probability of fire growth beyond incipient stage = 0 077
Scenario frequency = 9 5E-03 x 0.077 = 7.3E-04 per year

This scenario is modeled as a transient with main feedwater available. Because of the fire situation and also because control is from the remote shutdown workstation, the human error probabilities are increased in comparison to what is in the model. A value of 0.1 for probability of failure is used for the human actions.

It should be noted that this fire scenario was not modeled to result in spurious actuations of any kind. It is very unlikely that encoded information can be reproduced in a "hot short" of the fiber-optic cables in these panels In addition, because of the control logic, a spurious signal requires two hot shorts in the correct order.

57.5 Calculation of Conditional Core Damage Probabilities (CCDP)

The event tree models for fire areas define and calculate sequence frequencies, which can be expressed as the product of sequence frequency times the CCDP.

Plant and the Containment

The fire scenarios identify the loss of systems in case of fire in each risk-significant area. These failures are used, first to choose a proper initiating event in the AP1000 Level 1 PRA and then to switch off the systems damaged by the fire. Then, the event trees chosen and modified are recalculated and give the CCDP for each fire scenario.

See Attachment 57A for calculation of CCDPs (Table 57A.1-1).

The Main Control Room

The MCR fire frequency Q1 is calculated as 7.3E-04/yr.

The CCDP for the fire scenario is calculated on the basis of transient initiating events. Actually, two CCDPs are calculated. one scenario with all HEPs set to 0.1 to take into account degraded conditions in operating the plant and a scenario with all HEPs set to 1, as a sensitive case. The scenario CCDPs from Attachment 57A.1 are as follows:

PRA Scenario	Scenario Number	CCDP
IEV-TRANS, all HEP set to 0.1	SCEN44	4.35E-09
IEV-TRANS, all HEP set to 1 (sensitivity case)	SCEN43	2.91E-08

57.6 Calculation of CDF from Fire Events

57.6.1 Calculation of Plant Fire CDF

The fire scenario frequencies are multiplied by the CCDPs to obtain the core damage frequency (CDF) attributable to fire events.

The results are shown in Table 57-9 for different buildings and fire areas. The total CDF calculated from all fire scenarios studied is 5.61E-08/year. The total initiating event frequency of fires is 0.29/year.

Table 57-10 presents the distribution of fire CDF frequency by three major areas of the plant: namely, the Containment, the Main Control Room, and the Balance Of the Plant. The fire risk comes from the Balance Of the Plant and the Containment with 60- and 40-percent contributions, respectively.

The fire scenarios studied in this report are grouped in terms of 8 plant areas as listed in Table 57-11. Six of these areas correspond to the Balance Of the Plant (excluding the Containment and the MCR) mentioned in Table 57-10. Out of these six areas, the Auxiliary Building, the Annex Building, and the Turbine Building contribute 30-, 15-, and 11-percent to the plant fire CDF, respectively.

57.6.2 Comments on Plant Areas

57.6.2.1 The Plant Except the Main Control Room and the Containment

The Yard

The yard is the fifth contributor to the fire risk with almost 4% contribution to plant fire CDF. It is treated as a single scenario.

The Auxiliary Building

The fire risk for this building is the second contributor to plant fire risk. The main contributing areas follow:

- Area 1200 AF 03 (Corridors 100′ & 117′ 6″)

  Two dominant scenarios add up to a CDF of 6.65E-09 (40 percent of the Auxiliary Building risk; 12 percent of the plant fire risk).

  The main scenario (CDF = 4.35E-09) is a transient with loss of squib valves actuation by the DAS and loss of Division B and D I&C cables. However, the cables controlling the ADS valves are not damaged. Thus, the CCDP scenario is conservatively a transient with loss of Division B and D power and control. Division B and D cable to ADS valves availability is replaced by the availability of the DAS.

The second scenario is identical, except it includes a spurious actuation of one squib valve (2 23E-09).

- Area 1230 AF 02 (Non-Class 1E Electrical Compartment - 100')

  These are the same scenarios as for fire area 1200 AF 03, except the non-1E cables are damaged instead of Division B and D cables. Thus, the CCDP is lower. The probability of spurious actuation is much lower because of the availability of the automatic fire suppression system located in this area. When the automatic fire suppression system is available, it is expected that the damages to the cables would be less severe.

  The contribution of the area to the plant fire risk is 4 percent; contribution to the Auxiliary Building risk is 14 percent. The dominant scenario is fire in the area with suppression successful, leading to loss of Non-1E Division, DAS, Division B & D to the Reactor Trip Switchgear.

  The rest of the risk induced by fire is the loss of the 1E-electrical divisions. The main scenarios are the loss of the 1E-electrical divisions, combined with a spurious actuation of one ADS Stage-4 valve; or with a spurious actuation of one ADS Stage 1, or 2, or 3 valve; or without spurious actuation.

The Turbine Building

The risk induced by a fire in the Turbine Building is 11 percent and is dominated by a fire in the Turbine Building floor area. Because of the floor area size and contents, the probability of a fire is one of the highest for the Turbine Building. The loss of all non-safety systems contained in this area is conservatively assumed.

The three fire areas, 2052 AF 01, 2053 AF 01 and 2053 AF 02, present the same scenario; their fire ignition probability is simply lower, so the risk is smaller. A fire in the other areas leads also to the same scenario, but only after propagation. Thus, the risk, including a probability of 0.01 (probability of propagation) is negligible.

The Annex Building

Two areas, the Battery Rooms, represent 96 percent of the risk in the Annex Building. In a fire scenario, the DAS is lost. It is conservatively assumed that there is a loss of the 2 non-1E electrical groups. The risk is overestimated, but remains at a very low level

The Radwaste Building

The Radwaste Building does not contain any PRA-credited component but does have an automatic fire suppression system available. To obtain a risk of core damage, the fire suppression system must fail and the fire must propagate to Fire Area 1200 AF 01, which has a low CCDP. Thus, the risk is negligible.

The Diesel Generator Rooms

The Diesel Generator Rooms are similar to the Radwaste Building because the fire suppression must fail and the fire must propagate to an adjacent fire area to obtain a risk of core damage. Thus, the risk is negligible.

The Containment

Two fire zones, 1100 AF 11300B and 1100 AF 11500, represent 98 percent of the total risk for the Containment. These areas contain important PRA components; namely, cables for the 1E-Divisions and for DAS (for 1100 AF 11300B). There is a risk of spurious actuation of ADS valves with the loss of these cables.

The third contributor, with a 1.42 percent contribution, is the fire zone 1100 AF 11300A. The other fire zones in the containment have a very low probability of fire that induce a very low CDF.

The Containment has a total CDF value of 2.29E-08/yr, which is a 41-percent contributor to plant fire risk.

The Main Control Room

The AP1000 design of the Main Control Room reduces the risk to core damage induced by fire to a negligible amount as shown by the calculated CDF in Table 57-9.

57.6.3 Importances of Fire Areas

As shown in Tables 57-12 and 57-13, a total of 70 fire areas (fire zones in the Containment) are studied quantitatively in this PRA. These fire areas are sorted in Tables 57-12 and 57-13 first by their contribution to plant CDF, then by the conditional fire area core damage probability (CFACDP), which is area CDF divided by area fire ignition frequency. From tables, it is seen that 13 fire areas have CDF contributions of 1 percent or more. The two main contributors are fire zones in the Containment, namely the maintenance floor and the operating deck. The next two contributors are corridors 100′ & 117′ 6″ in the Auxiliary Building and the Turbine Building floor. The battery rooms in the Annex Building make up the next two dominant contributors. These 6 fire areas (zones) make up 76 percent of the total fire CDF. The top 13 areas by pecent contribution to CDF are shown in the following table for convenience.

1100 AF 11300B	Maintenance Floor (NNE Quadrant) and RCDT Access	23.49%
1100 AF 11500	Operating Deck	16.46%
1200 AF 03	Corridors 100′ & 117′ 6″	11.85%
2000 AF 01	Turbine Building Floor	9.08%
4031 AF 02	Battery Room and Battery Charger Room 2/Computer Room B/ Shift Turnover Room	7.72%

4031 AF 01	Battery Room and Battery Charger Room 1	7 06%
1230 AF 02	Non-Class 1E Electrical Compartment - 100'	3.99%
1201 AF 02	Division B Batteries/DC Equipment Room/Instrumentation and Control	3.67%
0000 AF 00	Yard Building (Including Transformer Yard)	3.63%
1202 AF 03	Division C Batteries/DC Equipment/I&C Room/RCP Trip Switchgear Room/I&C Penetration Room	3.15%
1201 AF 03	Division D DC Equipment/I&C	2.29%
1202 AF 04	Division A Electrical Equipment/Battery Room/I&C Room	1 14%
1220 AF 01	Division B RCP Trip Switchgear/Spare Room/Corridor 82' 6"	1 07%

Table 57-13 sorts the fire areas by their conditional fire area core damage probabilities (CFACDP). This risk measure is the probability of CDF due to a fire area, given that the fire has already ignited in the fire area. This ranking shows which fire areas are most susceptible to CDF, regardless of the value of the area fire ignition frequency. The top three areas ranked for contribution to CDF are also the top three dominant contributors to CFACDP; the Containment maintenance floor and the operating deck having CFACDPs in the E-05 range. The Turbine Building floor that appears in the CDF ranking is dropped from the CFACDP list for obvious reasons (the conditional CDP for Turbine Building is low) The battery rooms are still among the dominant contributors Three new areas with CFACDPs in the range of E-06 appear in the dominant fire area list: two of them are containment fire zones, and one is non-class 1E electrical compartment in the Auxiliary Building. The top 9 areas by their CFACDPs are given below for convenience.

1100 AF 11300B	Maintenance Floor (NNE Quadrant) and RCDT Access	3.55E-05
1100 AF 11500	Operating Deck	1.88E-05
1200 AF 03	Corridors 100' & 117' 6"	4.08E-06
1200 AF 12341	Middle Annulus	3.30E-06
1100 AF 11300A	Maintenance Floor (SE Quadrant Access)	2.11E-06
1230 AF 02	Non-Class 1E Electrical Compartment - 100'	1.43E-06
4031 AF 02	Battery Room and Battery Charger Room 2/Computer Room B/ Shift Turnover Room	1.38E-06
4031 AF 01	Battery Room and Battery Charger Room 1	1.38E-06
1201 AF 02	Division B Batteries/DC Equipment Room/Instrumentation and Control	5.53E-07

57.6.4 Conclusion

The AP1000 fire PRA for internal initiating events at power calculates the plant fire CDF to be 5.61E-08/year. This frequency is calculated by studying 70 fire areas (fire zones in the Containment) that are not screened out. The total initiating event frequency of fires is 0.29/year. These results show that the AP1000 design is robust in preventing core damage in case of a fire in any part of the plant.

57.7 Sensitivity Studies

This section describes the sensitivity analyses for parameters that are deemed to be important to the model.

57.7.1 Manual Fire Suppression Systems

Manual fire suppression is not credited in the AP1000 PRA internal fire analysis for events at power. However, fires occurring in existing plants are generally extinguishable by manual actions before they have the ability to spread and cause considerable damage. A sensitivity analysis may, therefore, be performed using a probability of 0.10 to determine the effect of fire suppression using manual fire systems, such as hose stations and fire extinguishers. In the situation where the fire is suppressed, consideration is given to the PRA damaged components lost due to the fire.

As the Containment is closed during operation and not accessible to manual fire suppression systems, manual fire suppression credit is not taken and the risk to core damage remains as originally calculated.

The sensitivity analysis result for the use of manual fire suppression systems for the plant (except the Containment and the Main Control Room) is (sensitivity analysis 1) given in Table 57-14.

By using a failure probability of 0.10, for using manual fire suppression systems, the CDF risk is reduced by 19 percent in the plant, not taking into consideration the Containment and MCR. Note that manual suppression success is only credited in fire areas where there is not already an automatic suppression system installed. The MCR has been previously determined to be negligible. The CDF risk remains conservative as the fire may be extinguished before any considerable plant damage has been experienced.

57.7.2 Sensitivity Analysis of the Probability of a Spurious Actuation of ADS Valves

Reduction of Hot Short Probability

The AP1000 PRA internal fire analysis for events at power uses a probability of 0.06 for hot shorts that could lead to a spurious actuation of an electrical circuit. As the AP1000 design has taken precautions, such as separation and fire retardant materials to limit hot shorts from occurring, the basic probability of 0.06 may be multiplied by a factor of 0.1 to obtain a sensitivity analysis effect on the basic model.

The result of using a lower probability for hot shorts is (sensitivity analysis 2) given in Table 57-15.

Using a probability of 0.006 for hot shorts reduces the plant core damage risk by 53 percent and the Containment core damage risk by a factor of more than 10

Increase of the Hot Short Probability

To assess the effect of the uncertainties of spurious actuation of ADS valves, a probability of 0.12 instead of 0.06 is used to recalculate the base model

The result is (sensitivity analysis 3) given in Table 57-16.

The plant fire CDF increases by a factor of 2.8 to 1.57E-07/yr., when the hot short probability is doubled. This shows that the plant fire risk is sensitive to hot short failure assumptions. The AP1000 design recognizes this sensitivity, and has engineered precautions to keep the consequences of the hot shorts to an acceptable minimum. See Attachment 57D for a discussion of the engineered design features to minimize hot shorts and/or their effects

57.7.3 Sensitivity of Human Action on Fire

Two human actions are considered explicitly in the fire scenarios:

- OPA-01 – The possibility to switch off the electrical power for each division in case of fire, to avoid spurious actuations of valves (in fire areas 1202 AF 04,1201 AF 02, 1201 AF 03, and 1202 AF 03, 1230 AF 01, and 1242 AF 02)
- OPA-02 – The necessity to manually actuate a valve to allow fire water to reach the automatic fire suppression system in Containment Zone 1100 AF 11300B.

In this sensitivity analysis, both human error probabilities are set to 1 (total failure).

The result is (sensitivity analysis 4) given in Table 57-17.

The risk from the Auxiliary Building increases by a factor of 10, essentially due to a potential loss of the four Class 1E power and control divisions located within the building. The containment CDF is also increased by a factor 2.6.

A third operator action, namely ADS actuation by DAS after the reactor trip, is implicitly modeled in some scenarios (included in the scenario CCDPs). The base value of this operator action is modified in some scenarios, as discussed in Appendix A-2. Sensitivity analysis 6 also addresses this operator action, implicitly.

57.7.4 Sensitivity Analysis on Ignition Frequencies

To evaluate the effect of the uncertainties associated with fire ignition frequencies, the fire ignition frequency for all fire areas having a lower probability than E-03 is multiplied by a factor of 10. According to the FIVE methodology, the main risk of fire ignition generally

comes from the compartment ignition sources (electrical cabinets, pumps, etc.) and this risk is in the order of magnitude of E-03. So, when the risk of fire initially calculated is less than E-03, the order of magnitude is changed to comprise an uncertainty on the location of compartment ignition sources.

When the risk is over E-03, the risk of fire ignition is not expected to be off by an order of magnitude; therefore, those fire area fire ignition frequencies are multiplied by a factor of two.

The result of this sensitivity analysis is (sensitivity 5) given in Table 57-18.

The plant risk goes up by a factor of 5.3 in this sensitivity analysis. The Containment risk goes up by a factor of 10. The calculated risk for the Containment shows that the Containment is very sensitive to the fire ignition frequencies but remains acceptable. In comparison with what was observed for the operating plant, the Containment ignition frequency of 1.75E-02/yr is a conservative value.

57.7.5 Sensitivity Analysis on ADS Actuation by DAS

In case of a postulated spurious ADS actuation due to fire, some scenarios credited further ADS Stage 4th line opening by DAS to meet the success criteria. The failure probability of this actuation, when calculated by the assumptions of the base AP1000 PRA is 2.28E-02. As discussed in Attachment 57A.2, a more appropriate value of 2.28E-03 is actually used in the fire scenarios. This sensitivity analysis addresses the use of 2.28E-02 instead of 2.28E-03.

To perform this sensitivity analysis, the values of CCDP for scenarios 9, 9A, 9B, and 13 (Attachment 57A.2) are changed from 2.28E-03 to 2.28E-02. The results (sensitivity analysis 6) are given in Table 57-19.

This sensitivity analysis affects the CDF of the Auxiliary Building and the Containment. The plant CDF increases by a factor of 4. This increase is mainly due to the increase in Containment CDF.

57.7.6 Sensitivity Analysis on 1E to Non-1E Separation in the Containment

The 1E and non-1E cables in the Containment fire zone 1100 AF 300B are physically separated and encased to eliminate (or minimize) fire propagation from one to the other. The probability of fire propagation from one to the other is represented in the fire event trees by Qxx = 0.01. A sensitivity analysis is performed to assess the importance of the results to this probability.

First, Qxx is set to 0.1. The plant CDF increases to 8.15E-08/yr, which is a small increase. The Containment fire zone 1100 AF 300B contribution is 49 percent.

Next, Qxx is set to 1.0. The plant CDF increases to 3.68E-07/yr, which is a large increase. The Containment fire zone 1100 AF 300B contribution is 88 percent.

Thus, the results are not sensitive to small changes in the value assumed for fire propagation from 1E to non-1E cables in the Containment fire zone 1100 AF 300B.

57.7.7 Sensitivity Analysis to Area to Area Propagation

FIVE methodology fire propagation value of 0.01 is used from fire area to fire area propagation in the event trees. If this value is increased to 0.1, the plant fire CDF becomes 8.15E-08/yr, which is a small increase. If a value of 1 0 is used, the plant fire CDF increases to 3.37E-07/yr.

Thus, the results are not sensitive to small changes in the value assumed for fire propagation from one fire area to another.

Note that, in this sensitivity case, the value of Qxx is not changed

57.7.8 Importance of Hot Shorts

Although the AP1000 design is systematically engineered to safeguard against spurious actuation of ADS lines due to hot shorts, this failure mechanism is, nevertheless, modeled in the fire PRA. The value 0 06 for a consequential hot short determines the contribution of this postulated failure mechanism to the plant risk. To determine the importance of this failure mechanism, the value of 0.06 is changed to 0.0. The results are shown in Table 57-20.

According to Table 57-20, when hot short probability is set to zero, the CDF becomes 2.59E-08/yr. Thus, the contribution of hot short related fire scenarios to the total is 54 percent. The remaining 46 percent contribution comes from the fire areas listed in the table As expected, the Turbine Building floor becomes the dominant contributor due to the sheer value of its fire ignition frequency.

57.8 Conclusion and Insights

Summary of Results

In this study, a fire PRA for internal events at power was performed for the AP1000 design, using EPRI FIVE methodology to identify fire scenarios and calculate their initiating event frequencies. The PRA calculates AP1000-specific conditional core damage probabilities (CCDPs) for identified scenarios, then multiplies these CCDPs by the scenario initiating event frequencies to obtain scenario core damage frequencies. This process is done for the plant areas shown in Table 57-21.

The total AP1000 PRA internal fire analysis for events at power CDF is 5.61E-08/yr The contribution of the plant areas to the fire CDF is shown in Table 57-21, and also illustrated in Figure 57-2. Figure 57-3 shows the contribution of fire areas to plant CDF.

The dominant fire scenarios are listed in Table 57-22.

Conclusions and Insights

The following conclusions and insights are derived from the AP1000 Fire PRA internal fire analysis for events at power:

1. The fire risk measured in terms of CDF is about 25 percent of the base risk for internal events at power. This is a relatively small contribution to plant risk.

2. Two thirds of the AP1000 fire risk comes from the Auxiliary Building and the Containment, followed by lesser contributions from the Annex and Turbine Buildings. The total contribution from these four plant areas add up to 96 percent of the fire CDF.

3. Although the AP1000 design has specific engineered features to prevent hot shorts that could lead to spurious actuation of ADS (leading to a LOCA event), spurious actuation of ADS is modeled in the fire PRA, leading to either a Medium LOCA (through opening of ADFS stage 1,2,3 lines), or a Large LOCA (through opening of ADS stage 4 line(s)). The fire scenarios containing spurious ADS actuation contribute 54 percent to the total fire CDF.

4. Various sensitivity analyses are performed. The model is seen to be not very sensitive to moderate changes in various parameters, such as fire propagation, and manual suppression in areas not containing automatic suppression.

5. Very few fire-specific operator actions need to be introduced into the fire PRA model. This indicates that the plant design is already robust with respect to fire hazards, with minimum need for crediting fire-specific operator actions.

6. Containment is modeled in detail to see if the fire risk due to postulated spurious ADS actuations (hot short related) is acceptable. Although the Containment CDF is an important contributor to plant fire CDF, the total fire CDF is still small, even when compared to CDF from internal events at power.

57.9 References

1. AP600 PRA Report – Chapter 57.

2. AP1000 Design Control Document, Revision 2, April 2002.

3. AP600 Standard Safety Analysis Report, Revision 27, March 2000.

4. NUREG/CR-4840, "Procedures for the External Event Core Damage Frequency Analysis for NUREG-1150," November 1990.

5. Electric Power Research Institute (EPRI) Report, "Fire-Induced Vulnerability Evaluation Methodology (FIVE) Plant Screening Guide," Revision 1, September 1993.

6. Electric Power Research Institute, NSAC/181L, "Fire PRA Requantification Studies," March 1993.

7. NUREG/CR-4527, "An Experimental Investigation of Internally Ignited Fires in Nuclear Power Plant Control Cabinets," April 1987.

8. Kazarians, M. and Apostolakis, G., NUREG/CR-2258 "Fire Risk Analysis for Nuclear Power Plants," September 1981, University of California at Los Angeles, Los Angeles, CA

9 Electric Power Research Institute, NSAC/178L, "Fire Events Database for US Nuclear Power Plants," June 1992.

10. Dandini, V., LaChance, J., Nowlen, S P., and Wyant, F., U.S. Nuclear Regulatory Commission, "Circuit Analysis – Failure Mode and Likelihood Analysis," May 2000

Table 57-1 (Sheet 1 of 6)

AP1000 FIRE AREAS EXCLUDING THE CONTAINMENT

AP 1000 Fire Area	Area Description	AP600 Fire Area	Screened Out?	Comments
0000 AF 00	Yard Building (including Transformer Yard)	0000 AF 00	NO	
1200 AF 01	RCA of Auxiliary Building	Part of 1200 AF 01	NO	
1200 AF 02	New Fuel and Used Fuel Storage, Waste Disposal Container	1200 AF 02 + 1230 AF 02	NO	
1200 AF 03	Corridors 100' & 117' 6"	1230 AF 04 + 1240 AF 02	NO	
1201 AF 01	Stairwell	1201 AF 01	YES	The combustible loading is negligible
1201 AF 02	Division B Batteries/dc Equipment Room/ Instrumentation and Control	1201 AF 02 + 1222 AF 01+ 1231 AF 01	NO	
1201 AF 03	Division D Batteries/ DC Equipment/I&C Room	1201 AF 03 + 1211 AF 01	NO	
1201 AF 04	Division B/D VBS Equipment	1201 AF 04	NO	
1201 AF 05	MSIV Compartment A	1201 AF 05	NO	
1201 AF 06	MSIV Compartment B	1201 AF 06	NO	
1202 AF 01	Stairwell	1202 AF 01	YES	The combustible loading is negligible
1202 AF 02	Northeast Elevator Shaft	1202 AF 02	NO	
1202 AF 03	Division C Batteries/dc Equipment/I&C Room/RCP Trip Switchgear Room/I&C Penetration Room	1202 AF 03 + 1202 AF 05	NO	
1202 AF 04	Division A Electrical Equipment/Battery Room/I&C Room	1202 AF 04 + 1212 AF 01	NO	
1202 AF 05	Stairwell	NONE	YES	The combustible loading is negligible[1]

Table 57-1 (Sheet 2 of 6)

AP1000 FIRE AREAS EXCLUDING THE CONTAINMENT

AP 1000 Fire Area	Area Description	AP600 Fire Area	Screened Out?	Comments
1204 AF 01	RNS Pump Room B	Included in 1200 AF 01	NO	
1204 AF 02	Stairwell	1204 AF 01	YES	The combustible loading is negligible
1204 AF 03	South Shield Building Elevator Shaft	1204 AF 02	NO	
1205 AF 01	Southeast Stairwell	1205 AF 01	YES	The combustible loading is negligible
1205 AF 02	Southeast Elevator Shaft	1205 AF 02	NO	
1210 AF 01	Corridor/Spare Battery Room/Spare Room/Spare Battery Charger Room	1210 AF 01 + 1212 AF 02 + 1212 AF 03 + 1212 AF 04	NO	
1220 AF 01	Division B RCP Trip Switchgear/Spare Room/Corridor 82' 6"	1220 AF 01 + 1222 AF 02	NO	
1220 AF 02	Lower Annulus Valve Area	Included in 1200 AF 01	NO	In AP600 study, there was no equivalent area. CL is 18,000 Btu - no propagation
1230 AF 01	Corridor Division A, B, C, D and Remote Shutdown Workstation	1230 AF 01	NO	
1230 AF 02	Non-Class 1E Equipment/Penetration Room	1230 AF 03	NO	
1232 AF 01	Remote Shutdown Workstation	1232 AF 01	NO	
1240 AF 01	Non-Class 1E Electrical Compartment 117'	1240 AF 01	NO	
1242 AF 01	Main Control Room	1242 AF 01	NO	
1242 AF 02	Division A Penetration Area	1242 AF 02	NO	
1243 AF 01	Reactor Trip Switchgear I	1243 AF 01	NO	

Table 57-1 (Sheet 3 of 6)

AP1000 FIRE AREAS EXCLUDING THE CONTAINMENT

AP 1000 Fire Area	Area Description	AP600 Fire Area	Screened Out?	Comments
1243 AF 02	Reactor Trip Switchgear II	1243 AF 02	NO	
1250 AF 01	Nuclear Island Non-Radioactive System Main Control Room/Division A and C Equipment Room	1252 AF 01	NO	
2000 AF 01	Turbine Building Floor	2000 AF 01	NO	
2000 AF 02	Southwest Stairwell Turbine Bldg.	2000 AF 02	YES	The combustible loading is negligible
2003 AF 01	Auxiliary Boiling Room	2033 AF 01	NO	
2003 AF 02	Northwest Stairwell Turbine Bldg.	NONE	YES	The combustible loading is negligible
2009 AF 01	Southeast Stairwell Turbine Bldg.	Part of 2009 AF 01	YES	The combustible loading is negligible
2009 AF 02	Elevator Machine Room	Part of 2009 AF 01	NO	There is no component or cable credited in PRA. However, the fire may propagate because of a combustible loading over 20,000 Btu/sqft (49,000)
2033 AF 02	Motor-Driven Fire Pump Room	2033 AF 03	NO	There is no component or cable credited in PRA. However, the fire may propagate because of a combustible loading over 20,000 Btu/sqft (44,000)
2040 AF 01	Clean & Dirty Lube Oil Storage	NONE	NO	There is no component or cable credited in PRA. However, the fire may propagate because of a CL over 20,000 Btu/sqft (4,450,000)
2043 AF 01	Secondary Sampling Laboratory	2043 AF 01	NO	
2050 AF 01	Lube Oil Conditioner Room	2050 AF 01	NO	There is no component or cable credited in PRA. However, the fire may propagate because of a CL over 20,000 Btu/sqft (1,648,000)
2052 AF 01	Switchgear Room 1	2052 AF 01	NO	
2053 AF 01	Generator Panel Room	2053 AF 01	NO	

Table 57-1 (Sheet 4 of 6)

AP1000 FIRE AREAS EXCLUDING THE CONTAINMENT

AP 1000 Fire Area	Area Description	AP600 Fire Area	Screened Out?	Comments
2053 AF 02	Switchgear Room 2	2053 AF 02	NO	
4001 AF 01	Stairwell	4003 AF 01	YES	The combustible loading is negligible
4001 AF 02	Elevator Shaft and Elevator	4003 AF 02	YES	The combustible loading is negligible
4002 AF 01	Stairwell	4001 AF 01	YES	The combustible loading is negligible
4002 AF 02	Stairwell	4001 AF 02	YES	The combustible loading is negligible
4003 AF 01	Demineralized Water Deoxygenating Room/Air Handling Equipment Room	4031 AF 04 (DI water deoxygenating room)+ new area with components of 4052 AF01	NO	There is no PRA credited equipment in this room. However, the fire may propagate to the Auxiliary Building in case of failure of the 3-hour rated barrier
4003 AF 02	Stairwell	NONE	YES	The combustible loading is negligible
4031 AF 01	Battery Room and Battery Charger Room 1	4032 AF 04 + 4032 AF 02	NO	
4031 AF 02	Battery Room and Battery Charger Room 2/ Computer Room B/ Shift Turnover Room	4032 AF 01 + 4032 AF 03 + components not found in AP 600	NO	
4031 AF 05	Access Area, Access Corridor, Security Room 2, Corridor, Rest Room	Part of 4033 AF 01 but no Security Room	NO	This room contains no equipment modeled in the PRA. However, it is included to assess the potential for fire propagation scenarios.
4031 AF 06	Central Alarm Station/ Security Room 1	4033 AF 02 + components not found in AP 600	NO	This room contains no equipment modeled in the PRA. However, it is included to assess the potential for fire propagation scenarios

Table 57-1 (Sheet 5 of 6)

AP1000 FIRE AREAS EXCLUDING THE CONTAINMENT

AP 1000 Fire Area	Area Description	AP600 Fire Area	Screened Out?	Comments
4032 AF 01	Decontamination Room, Non-Radiological and Radiological Controlled Area Entries	4031 AF 03 + 4031 AF 05 (no longer an electrical room for AP1000)	NO	
4032 AF 02	Containment Access Corridor Elevation 107'2"	4031 AF 02	NO	
4033 AF 01	Hot Machine Shop/Pump Seal Shop	4031 AF 01	NO	This room contains no equipment modeled in the PRA. However, it is included to assess the potential for fire propagation scenarios.
4034 AF 01	General Offices	Part of 4033 AF 01	NO	This room contains no equipment modeled in the PRA. However, it is included to assess the potential for fire propagation scenarios.
4035 AF 01	Temporary Electric Supply Room	NONE	YES	This fire area contains no equipment modeled in the PRA. Moreover, there are no adjacent fire areas containing important shutdown equipment that would be damaged if the fire should propagate from 4035 AF 01.
4041 AF 01	Conference rooms/ Computer room A/ Corridor...	4042 AF 02	NO	
4041 AF 02	Corridor/ restroom	NONE	NO	
4042 AF 01	Non-class 1E Switchgear #1	4042 AF 01	NO	
4042 AF 02	Non-class 1E Switchgear #2	4041 AF 01	NO	
4051 AF 01	North Air Handling Equipment Room/ Air Intake Plenum 1	4052 AF 01	YES	In case of fire there is a loss of cooling of switchgear room without effect on switchgear rooms themselves. Propagation is not credible because of a low combustible loading.

Table 57-1 (Sheet 6 of 6)

AP1000 FIRE AREAS EXCLUDING THE CONTAINMENT

AP 1000 Fire Area	Area Description	AP600 Fire Area	Screened Out?	Comments
4052 AF 01	Staging And Storage Area/ Containment Air Filtration Exhaust Rooms A & B	4051 AF 01 + 4051 AF 02	NO	
5031 AF 01	Radwaste Building	5000 AF 00	NO	
6030 AF 01	DG Room A	6030 AF 01	NO	
6030 AF 02	DG Room B	6030 AF 02	NO	
6030 AF 03	Fuel Oil Day Tank Room A	6030 AF 03	NO	
6030 AF 04	Fuel Oil Day Tank Room A	6030 AF 04	NO	

Note:

1. This area contains the control transfer switch from the MCR to the remote shutdown workstation Fire damage to this switch could lead to the loss of control for all safe shutdown equipment from the MCR However, this area can be screened out because the combustible loading is negligible. FIVE methodology states that propagation from an area with a very low combustible loading is not credited because of the possibility of stopping the fire using manual suppression

Table 57-2 (Sheet 1 of 2)

AP1000 FIRE AREAS IN THE CONTAINMENT

Fire Area/Zone AP1000	Area Description	Fire Area AP600 Comparable Or Identical	Screened Out?	Comments
1100 AF 11105	Reactor Vessel Cavity/Reactor Vessel Nozzle Area	1100 AF 11105	YES	For AP600, this area was screened out because of no combustible materials in the area. For AP1000, there is a CL of 3,900 Btu. There, are detectors to monitor and verify that the reactor is shutdown but no PRA credited systems.
1100 AF 11204	Reactor Coolant Drain Tank Room	Part of 1100 AF 11300B	NO	CL is of 1,300 Btu. Loss of passive core cooling system, containment floodup level and reactor coolant system instrumentation.
1100 AF 11206	PXS Valve/ Accumulator Room A	1100 AF 11206	NO	
1100 AF 11207	PXS Valve/ Accumulator Room B	1100 AF 11207	NO	
1100 AF 11208	RNS Valve Room	1100 AF 11208	NO	
1100 AF 11209	CVS Room	1100 AF 11209 (boundaries differ slightly)	YES	There are four isolation valves for WLS and CVCS. They are normally closed, fail closed and not required for normal shutdown.
1100 AF 11300A	Maintenance Floor	1100 AF 11300A	NO	
1100 AF 11300B	Maintenance Floor North	1100 AF 11300B + (boundaries differ slightly) 1100 AF 11300C	NO	
1100 AF 11301	SG Compartment 1	1100 AF 11301	NO	
1100 AF 11302	SG Compartment 2	1100 AF 11302	NO	
1100 AF 11303	Pressurizer Compartment	1100 AF 11303	NO	

Table 57-2 (Sheet 2 of 2)

AP1000 FIRE AREAS IN THE CONTAINMENT

Fire Area/Zone AP1000	Area Description	Fire Area AP600 Comparable Or Identical	Screened Out?	Comments
1100 AF 11303A	ADS Upper Valve Area	1100 AF 11303A	NO	
1100 AF 11303B	ADS Lower Valve Area	1100 AF 11303B	NO	
1100 AF 11500	Operating Deck	1100 AF 11500 + 1100 AF 11590	NO	
1200 AF 12341	Middle Annulus	1200 AF 12356	NO	
1200 AF 12541	Upper Annulus	1200 AF 12556	YES	There are Division B & C cables serving the PCCS. The loss of PCCS isn't risk significant. No propagation because of a low combustible loading.
1270 AF 12701	PCCS Valve Room/Stairwell	1270 AF 12701 (boundaries differ slightly)	YES	There are only components of PCCS The loss of PCCS isn't risk significant No propagation because of a low combustible loading The 1E-cables in this area are also in supply of PCCS.
1250 AF 12555	Main Control Room Emergency Habitability System Air Storage/ Operating Deck Staging Area	4051 AF 01	NO	No PRA-related systems in this area, but the fire may propagate because of a combustible loading above 20,000 Btu/sqft

Table 57-3 (Sheet 1 of 4)

FIRE IGNITION FREQUENCIES FOR AP1000 FIRE AREAS

Fire Area	Area Description	Ignition Frequency	Fire Suppression System – Probability of Failure
0000 AF 00	Yard Building (Including Transformer Yard)	2.00E-02	No
1200 AF 01	RCA of Auxiliary Building (All Zones)	1.81E-02	Wet pipe sprinklers - 0.02 (in Zone 1220 AF 12251)
1200 AF 01 1220 AF 12251	RCA of Aux. Building Zone 1220 AF 12251 With Sprinklers	9.95E-03	
1200 AF 02	New Fuel and Used Fuel Storage, Waste Disposal Container (All Zones)	1.10E-03	Wet pipe sprinklers - 0.02 (in Zone 1230 AF 12371)
1200 AF 02 1230 AF 12371	New Fuel and Used Fuel Storage, Waste Disposal Container, Rail Car Bay Zone	1.84E-04	
1200 AF 03	Corridors 100' & 117' 6"	1.63E-03	Manual
1201 AF 02	Division B Batteries/DC Equipment Room/Instrumentation and Control	3.73E-03	Manual
1201 AF 03	Division D DC Equipment/I&C	3.04E-03	Manual
1201 AF 04	Division B/D VBS Equipment	3.60E-04	Manual
1201 AF 05	MSIV Compartment A	6.60E-04	Manual
1201 AF 06	MSIV Compartment B	3.31E-04	Manual
1202 AF 02	Northeast Elevator Shaft	1.17E-03	Manual
1202 AF 03	Division C Batteries/DC Equipment/I&C Room/RCP Trip Switchgear Room/I&C Penetration Room	4.45E-03	Manual
1202 AF 04	Division A Electrical Equipment/Battery Room/I&C Room	3.00E-03	Manual
1204 AF 01	RNS Pump Room B	4.97E-03	Manual
1204 AF 03	South Shield Building Elevator Shaft	1.17E-03	Manual
1205 AF 02	Southeast Elevator Shaft	1.17E-03	Manual

Table 57-3 (Sheet 2 of 4)

FIRE IGNITION FREQUENCIES FOR AP1000 FIRE AREAS

Fire Area	Area Description	Ignition Frequency	Fire Suppression System – Probability of Failure
1210 AF 01	Corridor/Spare battery Room/Spare Room/Spare Battery Charger Room	1 47E-03	Manual
1220 AF 01	Division B RCP Trip Switchgear/Spare Room/Corridor 82' 6"	4 43E-03	Manual
1220 AF 02	Lower Annulus Valve Area	1 71E-04	Manual
1230 AF 01	Corridor Division A, B, C, D and Remote Shutdown Workstation	1 71E-04	Manual
1230 AF 02	Non-Class 1E Electrical Compartment - 100'	1.56E-03	Preaction Sprinkler – 0 05
1232 AF 01	Remote Shutdown Workstation	1.32E-04	Manual
1240 AF 01	Non-Class 1E Electrical Compartment - 117'	1.55E-03	Manual
1242 AF 02	Division A Penetration Area	3.33E-04	Manual
1243 AF 01	Reactor Trip Switchgear I	2.84E-03	Manual
1243 AF 02	Reactor Trip Switchgear II	2.84E-03	Manual
1250 AF 01	Nonradioactive Ventilation System	2 68E-03	Manual
2000 AF 01	Turbine Building Floor	6 47E-02	Various – 0.05
2003 AF 01	Auxiliary Boiler Equipment Room	1.23E-03	Wet pipe sprinklers – 0.02
2009 AF 02	Elevator Machine Room	1 17E-03	Manual
2033 AF 02	Motor-Driven Fire Pump Room	1 01E-03	Manual
2040 AF 01	Clean and Dirty Lube Oil Storage	2 83E-04	Wet pipe sprinklers – 0.02
2043 AF 01	Chemical Laboratory	3 23E-04	Wet pipe sprinklers – 0.02
2050 AF 01	Lube Oil Conditioner Room	2 83E-04	Wet pipe sprinklers – 0.02
2052 AF 01	Southwest 6.9KV Switchgear Room	2 48E-03	Manual

Table 57-3 (Sheet 3 of 4)

FIRE IGNITION FREQUENCIES FOR AP1000 FIRE AREAS

Fire Area	Area Description	Ignition Frequency	Fire Suppression System – Probability of Failure
2053 AF 01	Electrical Equipment Room	6.70E-03	Manual
2053 AF 02	Northwest 6 9KV Switchgear Room	2.48E-03	Manual
4003 AF 01	Demineralized Water Deoxygenating Room/Air Handling Equipment Rooms	4.26E-03	Manual
4031 AF 01	Battery Room and Battery Charger Room 1	2.87E-03	Manual
4031 AF 02	Battery Room and Battery Charger Room 2/Computer Room B/Shift Turnover Room	3.14E-03	Manual
4031 AF 05	Access Area, Access Corridor, Security Room 2, Corridor, Rest Room	1.42E-03	Manual
4031 AF 06	Central Alarm Station/Security Room 1	1.93E-03	Manual
4032 AF 01	Decontamination Room, Non-Radiological and Radiological Controlled Area Entries.	8.53E-04	Manual
4032 AF 02	Containment Access Corridor Elevation 107' 2"	4.38E-04	Wet pipe sprinklers – 0.02
4033 AF 01	Hot Machine Shop	1.67E-03	Manual
4034 AF 01	General Offices	1.42E-03	None
4041 AF 01	Conference Rooms/Computer Room A/Corridor	4.66E-04	Manual
4041 AF 02	Corridor/Restroom	4.50E-04	Manual
4042 AF 01	Non-Class 1E Switchgear #1	8.34E-03	Manual
4042 AF 02	Non-Class 1E Switchgear #2	2.66E-03	Manual
4052 AF 01	Staging and Storage Area/Containment Air Filtration Exhaust Rooms A & B	1.94E-03	Manual

Table 57-3 (Sheet 4 of 4)

FIRE IGNITION FREQUENCIES FOR AP1000 FIRE AREAS

Fire Area	Area Description	Ignition Frequency	Fire Suppression System – Probability of Failure
5031 AF 01	Radwaste Building	2.42E-02	Preaction sprinkler – 0 05 (except in two zones without common barriers with aux building)
6030 AF 01	Diesel Generator Room A	2.99E-02	Dry pipe sprinklers - 0.05 (in Zone 6030 AF 60310)
6030 AF 02	Diesel Generator Room B	3.03E-02	Dry pipe sprinklers - 0.05 (in Zone 6030 AF 60320)
6030 AF 03	Fuel Oil Day Tank Room A	2.10E-04	Dry pipe sprinklers - 0 05
6030 AF 04	Fuel Oil Day Tank Room B	2.10E-04	Dry pipe sprinklers - 0 05
Total		2 80E-01	

Comments and Explanations for Table 57-3:

The following AP1000 fire areas were areas that were modified or new to AP600:

1200 AF 01 (RCA of Aux. Building) and 1204 AF 01 (RNS Pump Room B):
The fire area 1204 AF 01 was formerly included in fire area 1200 AF 01 in AP600. Fire ignition frequency for this area (from Reference 5) evaluated three values for three zones. Among these zones is the RNS pump zone (zone 1215 AF 12161). To obtain the fire ignition frequency for area 1204 AF 01, the fire ignition frequency was divided by two and is taken back from area 1200 AF 01.

1200 AF 02 (New Fuel and Used Fuel Storage, Waste Disposal Container), 1200 AF 03 (Corridors 100' & 117' 6"), 1204 AF 03 (South Shield Building Elevator Shaft), 1210 AF 01 (Corridor/Spare Battery Room/Spare Room/Spare Battery Charger Room):
The fire ignition frequencies were obtained from Reference 5. For AP600, they were evaluated but not used because the areas were screened out. The fire ignition frequency for zone 1230 AF 12371 was calculated as a proportion of the zone area to the fire area. This approach is valuable because the fire ignition frequency for the zone depends only on total fire area (See Reference 5)

1220 AF 02 (Lower Annulus Valve Area):
This fire area was part of AP600 fire area 1200 AF 01. The fire ignition frequency is based on one transient, one miscellaneous hydrogen fire and conservatively 5% percent of the calculated frequency of 1200 AF 01. The 5% is not deducted from fire area 1200 AF01.
Fire frequency for the area 1220 AF02 Fi:
$F_{i_{1220AF02}}$=10/161*1.3E-03+1/177*3.2E-03+0.05*(1.15E-03+1.89E-04+1.02E-04)=1.71E-04

2000 AF 01 (Turbine Building Floor):
All zones but five have an automatic suppression system and consist of various type fire suppression systems. Because there are different types of automatic fire suppression systems, the probability of failure depends on the suppression system having the highest probability of failure (0.05). This assumption remains very conservative and implies the loss of all systems in the area. If there is a fire in a zone not having a fire suppression system, the only possibility of propagation is to the rest of the turbine building. Therefore, zones containing fire suppression systems, if they do not fail, stop the progression of the fire. The zones without fire suppression systems are located at the very end of the turbine building opposite the auxiliary building end.

2009 AF 02 (Elevator Machine Room):
AP1000 fire area differs from the fire area defined in AP600 as the AP600 fire area also contained a stairwell. The AP600 fire ignition frequency was not modified, as the main source of fire ignition is the elevator. The stairwell adds little to this fire scenario.

2040 AF 01 (Clean & Dirty Lube Oil Storage):
This fire area is very similar to the fire area 2050 AF 01 (Lube Oil Conditioner Room); therefore, the same fire ignition frequency is used.

6030 AF 01 (Diesel Generator Room A) and 6030 AF 02 (Diesel Generator Room B):
Propagation from either Diesel Generator Room A or B to any adjacent fire area is not possible.

The Annex Building:
The AP1000 Annex Building is vastly different from the AP600 Annex; however, there is a very low risk of core damage caused by any conceivable Annex Building fire scenario. The AP600 fire ignition frequencies were evaluated and used proportionally to calculate the AP1000 fire ignition frequency for the Annex Building. Even though there isn't the exact value for each fire ignition frequency for AP1000 there is at least the proper order of magnitude.

Area 4003 AF 01 (Demineralized Water Deoxygenating Room/Air Handling Equipment Rooms):
The evaluation of the fire ignition frequency for this fire area is based on the FIVE methodology (Reference 5) using the AP600 data (Reference 4) See the table below.

Compartment/ Plant Wide Ignition Sources	Value[1] Associated to the Compartment	Value Associated to the Building	Total Fire Ignition Frequency	Fire Frequency Associated to the Compartment	Comments
Electrical Cabinet	1	14[2]	1.90E-02	1.36E-03	From AP600 area 4031 AF 04
Transients	60	161[3]	1.30E-03	4 84E-04	6 rooms
Welding/ Ordinary Combustibles	0 008	1[3]	3.10E-02	2 48E-04	Depends on the total area of the rooms twice the value of AP600 area 4031 AF04 plus the value of AP600 4031 AF 01
Welding Cables	0 008	1[3]	5 10E-03	4 08E-05	
Junction Boxes	0 008	1[3]	1 60E-03	1 28E-05	
Transformers	4	36[3]	7.09E-3	8 78E-04	Value of AP600 4031 AF 04 plus half the value of AP600 4052 AF 01
Ventilation Systems	15	126[3]	9 50E-03	1 13E-03	
Miscellaneous Hydrogen Fires	6	177[3]	3 20E-03	1 08E-04	6 rooms
Total				4.26E-03	

Note:
1 Number of ignition sources in compartment
2 Total number of ignition sources in selected plant location
3 Total number of ignition sources/compartments in plant

Area 4031 AF 01 (Battery Room And Battery Charger Room 1):
The AP600 fire areas 4032 AF 04 and 4032 AF 02 fire ignition frequencies are added together to obtain the value for this fire area.

Area 4031 AF 02 (Battery Room and Battery Charger Room 2/Computer Room B/Shift Turnover Room):
This fire area is composed of the AP600 areas 4032 AF 01 and 4032 AF 03 plus the computer room B, which is the size of the area 4032 AF 01 The fire ignition frequency of the AP600 fire area 4032 AF 01 assessed twice and added to the fire ignition frequency of the AP600 fire area 4032 AF 02 to obtain the fire ignition frequency for this area.

Area 4031 AF 05 (Access Area, Access Corridor, Security Room 2, Corridor, Rest Room) And 4034 AF 01 (General Offices):
After reviewing the AP600 drawings used for the Fire PRA and the AP1000 drawing for the Annex Building, an assumption was made to use approximately one-half of the fire ignition frequency of AP600 fire area 4033 AF 01 is attributed to 4034 AF 01 The other half is attributed to 4031 AF 05.

Area 4031 AF 06 (Central alarm station/security room 1):
The fire ignition frequency for AP600 fire area 4033 AF 02 is used as the fire ignition frequency for this fire area

Area 4032 AF 01 (Decontamination Room, Non-Radiological and Radiological Controlled Area Entries):
This area is a bit smaller than the equivalent area of the AP600 fire area 4031 AF 03 (of the Fire PRA study); however, the same fire ignition frequency is used for this fire area.

Area 4032 AF 02 (Containment Access Corridor Elevation 107' 2") and Area 4033 AF 01 (Hot Machine Shop):
This fire area is identical to the AP600 fire area; therefore, the same fire ignition frequency is used.

Areas 4041 AF 01 (Conference Rooms/Computer Room A/Corridor...), 4041 AF 02 (Corridor/Restroom):
As these fire areas are similar to AP600 fire areas 4042 AF 02 and 4042 AF 03; the same fire ignition frequencies are used.

Areas 4042 AF 01 (Non-Class 1E Switchgear #1) and 4042 AF 02 (Non-Class 1E Switchgear #2):
As these fire areas are similar to AP600 fire areas 4042 AF 01 and 4041 AF 01; the same fire ignition frequencies are used.

Area 4051 AF 01 (North Air Handling Equipment Room):
This AP1000 fire area is equivalent to the AP600 fire area 4052 AF 01; however, according to the designers, a part of the equipment that was shown in AP600 is being installed in fire area 4003 AF 01 for AP1000. So, the fire ignition frequency for this area is the fire ignition frequency associated to AP600 fire area 4052 AF (3.37E-03) less one-half of the fire ignition frequency (1.20E-03) due to equipment relocation to a different fire area.

Area 4052 AF 01 (Staging And Storage Area/Containment Air Filtration Exhaust Room):
This area is smaller than the equivalent AP 600 fire areas of 4051 AF 01 + 4051 AF 02. It is conservatively assumed that the fire ignition frequency is the same.

Table 57-4

FIRE IGNITION FREQUENCIES FOR AP1000 CONTAINMENT FIRE AREA

Fire Area	Description	Frequency	Fire Suppression System – Probability of Failure
1100 AF 11204	Reactor Coolant Drain Tank Room	3 50E-05	Manual
1100 AF 11206	Accumulator Room A	1 81E-05	Manual
1100 AF 11207	Accumulator Room B	1 81E-05	Manual
1100 AF 11208	RNS Valve Room	1.81E-05	Manual
1100 AF 11300A	Maintenance Floor (SE Quadrant Access)	1.54E-04	Manual
	Maintenance Floor (NNE Quadrant) and RCDT	3 71E-04	Water Spray System[1]
1100 AF 11300B	Access		Manual
1100 AF 11301	SG Compartment 1	1 70E-04	Manual
1100 AF 11302	SG Compartment 2	9 51E-05	Manual
1100 AF 11303	Pressurizer Compartment	1 81E-05	Manual
1100 AF 11303A	ADS Lower Valve Area	1 81E-05	Manual
1100 AF 11303B	ADS Upper Valve Area	1 81E-05	Manual
1100 AF 11500	Operating Deck	4.92E-04	None
1200 AF 12341	Middle Annulus	2.29E-05	None
1200 AF12555	Main Control Room Emergency Habitability System Air Storage/Operating Deck Staging Area	1.50E-03	Manual
Total		2 95E-03	

Note:

1. Water Spray System is automatic, however, it requires a fire water supply valve to be manually opened prior to the use of the system The fire water spray valve is located external to the containment area. The spray system protects the non-1E cables.

Comments and Explanations for Table 57-4:

Location of Main Components in Term of Fire Risk

Zones 1100 AF 11300A (Maintenance Floor - SE Quadrant Access), 1100 AF 11300B (Maintenance Floor (NNE Quadrant) and RCDT Access) and 1100 AF 11500 (Operating Deck):
The electrical cabinets, the pumps (except the RCPs), and the transformers are the main source of fire in this fire area. The AP600 fire ignition frequencies calculated for the containment are very low. The only zones with higher fire ignition frequencies are those in which there are electrical cabinets and/or transformers. From information obtained from the design engineer, the AP1000 Containment contains only 7 electrical cabinets compared to 10 in AP 600 study. AP1000 contains the same number of transformers within the Containment as was found in AP600.

Reference 5, EPRI's FIVE methodology, does not credit fire within a Containment for the following reasons:

- A hot gas layer is unlikely to form in most areas of the Containment that can damage cables.
- A large percentage of past fires were reactor coolant pump (RCP) fires that are unlikely to occur in the future due to oil collection system design improvements.

In 1993, the EPRI fire events database listed 35 fires that had occurred within containments in approximately 1300 reactor years. Four of these fires occurred between issuance of operating license and the date of commercial operation. Two more fires occurred during the first year of operation. Containment fires included 14 RCP firs at PWRs, as well as two electrical cabinet fires, one cable fire and one MSIV oil leak fire at a BWR. One crane starter motor and 16 transient ignition source fires also occurred. Twelve of the RCP fires occurred in 1980 or earlier and two fires had occurred at one plant within the two years prior to issuance of EPRI's report (1993). Since EPRI has issued their report no containment fires have occurred.

Fire methodology stated that containment fires are not considered risk significant due to the small number of containment fires that have occurred and as shown in most if not all plant probabilistic risk assessments.

EPRI's report goes on further to state that a qualitative assessment should be made if:

1. The plant experience indicates that fires in containment during power operations have occurred on a recurring basis
2. Redundant trains of critical equipment within the containment might be exposed to the same fire plume or be in a confined space and susceptible to damage by a hot gas layer.

As the AP1000 is a newly designed system these are two moot points of discussion. Care has been taken within the containment to separate and protect the 1E Division and DAS cables. Division A and C are kept completely separate from Division B and D cables. DAS cables used in conjunction with Division A and C are located with Division B and D cables and the reverse of this is true. In order for a fire to propagate from one set of cables to the other, an all-encompassing containment fire would have to occur and this is not possible as there is not sufficient combustibles to fuel this type of fire.

Generic electrical cabinet and transformer fire ignition frequency data has been taken from EPRI's FIVE methodology and used to calculate the containment fire ignition frequency. As these generic numbers apply in general and do not depend on the location of the equipment, the containment fire ignition frequency is considered to be conservative. Taking into account that containment fires are not risk significant, for reasons given above, and that containment fire ignition frequency is based on generic data, the containment fire ignition frequency has been reduced by a factor of 10.

System	Fire Zone	Number of Electrical Cabinets	Fire Ignition Frequency Associated to Electrical Cabinets	Fire Ignition Frequency Associated to Transformers	Total Fire Ignition Frequency (Fi)
AP600	1100 AF 11300B	0	0	0	1 75E-04
	1100 AF 11300C	4/10	8.00E-04	0	8.24E-04
	1100 AF 11500	6/10	1.20E-03	1.32E-03	2.86E-03
AP1000	1100 AF 11300B	6/7	1 71E-04	0	3.71E-04
	1100 AF 11300A	1/7	2 90E-05	0	1.54E-04
	1100 AF 11500	0	0	1.32E-04	4 92E-04

For the 1100AF11300B (AP1000), the fire ignition frequency (F_I) is calculated as follows

$$F_{I_{1100\,AF11300B/AP1000}} = F_{I_{1100\,AF\,11300C/AP600}} + F_{I_{1100\,AF\,11300B/AP600}} + (1.71E\text{-}04 - 8\ 0E\text{-}04)$$

The AP1000 Zone 1100 AF 11300B fire ignition frequency is sum of the fire ignitions of the AP600 Zones 11300B and 11300B (Reference 4) less the AP600 fire ignition probability due to the electrical cabinets, plus the AP1000 fire ignition due to electrical cabinets counted for this zone

For the 1100AF11300A (AP1000), the fire ignition frequency (F_I) is calculated as follows

$$Fi_{1100AF11300A/AP1000} = Fi_{1100\,AF\,11300A/AP600} + 2.9E\text{-}05$$

The fire ignition frequency in AP1000 Zone 1100 AF 11300A is the sum of the fire ignition frequency of AP600 Zone 11300A (Reference 4) and the fire ignition probability due to the electrical cabinets in AP1000

For the 1100AF11500 (AP1000), the fire ignition frequency (Fi) is calculated as follows:

$$F_{I_{1100AF11500/AP1000}} = F_{I_{1100\,AF\,11500/AP600}} + F_{I_{1100\,AF\,11590/AP600}} - 1\ 2E\text{-}03\text{-}1.32E\text{-}03+1\ 32E\text{-}04$$

The AP1000 Zone 1100 AF 11500 fire ignition frequency is the sum of fire ignition frequencies of AP600 Zones 11500 and 11590 (Reference 4) less the AP600 fire ignition probability due to the electrical cabinets (there are no electrical cabinets in this zone) less the fire frequency associated to transformer in AP600 study plus the fire frequency associated to transformer in AP1000 (one tenth of the AP600 value)

Zone 1100AF11204 (Reactor Coolant Drain Tank Room):
For the AP600 Fire PRA study, this zone was included into Zone 1100 AF 11300B

There is no specific component important for the evaluation of the risk of fire So, the risk of fire depends only on plant wide ignition sources that depend themselves on the area of the zone

It is conservatively assumed that the fire area 1100 AF 11204 represents less than 20% of the former AP600 1100 AF 11300B area Therefore, 20% of the AP600 1100 AF11300B fire ignition frequency (1.75E-04/y) was assumed as the AP1000 1100AF11204 fire ignition frequency (3.5E-05/y).

Table 57-5

FIRE BARRIER FAILURE PROBABILITIES

Barrier Type	Barrier Failure Probability/Demand
Type 1- Fire doors	7.40E-3
Type 2- Fire and Ventilation Dampers	2.70E-3
Type 3- Penetration Seals	1.20E-3

Table 57-6

AUTOMATIC SUPPRESSION SYSTEM RELIABILITY

System Type	Unavailability of System
Wet Pipe Sprinkler System	2.00E-02
Preaction or Dry Pipe Sprinkler System	5 00E-02
Deluge Sprinkler or Water Spray System	5 00E-02
CO_2 System	4 00E-02
Halon System	5 00E-02

No credit is taken for manual fire suppression.

Table 57-7 (Sheet 1 of 15)

SUMMARY OF QUALITATIVE EVALUATION RESULTS – POWER OPERATION – PLANT EXCEPT CONTAINMENT AND MAIN CONTROL ROOM

Fire Area	Room or Area Description	Type	Fire Scenario	Safety System Failed	Non-Safety System Failed
0000 AF 00	Yard	NSFA	1. For fires confined in the area, LOOP with all other PRA credited safe shutdown systems available.		LOOP
1000 AF 01	Containment		See Table 57-8		
1200 AF 01	RCA of the Auxiliary Building	MSFA	1. For fires confined within this fire area, loss of CVS and one train of RNS. Fire-induced spurious opening of valves or spurious running of a makeup pump is possible.		CVS and one train of RNS
			2 Propagation to Fire Area 1230 AF 02 bounded by the loss DAS, CVS and one train of RNS and Division B and D signals to the reactor switchgear		RNS, CVS, DAS, and Division B and D signals to the reactor switchgear
			3. This fire scenario is bounded by the loss DAS, CVS and one train of RNS loss of Division B and D signals to the reactor switchgear, and spurious opening of ADS Stage 1, 2, 3 or 4 valves due to fire-induced damage to DAS-related cabling.		RNS, CVS, DAS, and Division B and D signals to the reactor switchgear
1200 AF 02	New Fuel and Spent Fuel Storage, Waste Disposal Container	NSFA	1. For fire propagating to 1200 AF 01 loss of CVS and one train of RNS. Fire-induced spurious opening of valves or spurious running of a makeup pump is possible.		CVS and one train of RNS
1200 AF 03	Corridors 100' & 117' 6"	MSFA	1. Loss of Division B and D signals to the reactor trip switchgear, Division C input to RCP trip switchgear, Division B & D I&C and DAS	Division B & D I&C cables, Division B and D signals to the reactor trip switchgear	DAS

Table 57-7 (Sheet 2 of 15)

SUMMARY OF QUALITATIVE EVALUATION RESULTS – POWER OPERATION – PLANT EXCEPT CONTAINMENT AND MAIN CONTROL ROOM

Fire Area	Room or Area Description	Type	Fire Scenario	Safety System Failed	Non-Safety System Failed
			2 Loss of Division B and D signals to the reactor trip switchgear Division B & D I&C and spurious opening of ADS Stage 4 valve (due to damages to the DAS cables)	Division B & D I&C cables, and signals to the reactor trip switchgear	DAS
			3 For fire propagating from this area, loss of Division B and D signals to the reactor trip switchgear, Division C input to RCP trip switchgear Division B & D I&C cables, and Division C	Division B & D I&C cables, Division B and D signals to the reactor trip switchgear, Division C of power and control	DAS
			4. For fire propagating from this area, loss of B and D signals to the reactor trip switchgear, Division C input to RCP trip switchgear, Division B & D I&C cables, and Division C Spurious opening of ADS Stage 4 valve	Division C power and control and Division B & D I&C cables and signals to the reactor trip switchgear,	DAS
1201 AF 02	Division B Batteries/DC Equipment/ I&C Room	TSFA	1 The Division B power and control is assumed lost with no other systems or equipment impacted	Division B power and control	
			2 Division B power and control is assumed lost, plus spurious opening of ADS Stage 1, 2, 3 or Stage 4 valves due to damage to division B cabling that supports ADS valves [1]	Division B power and control	
			3 Propagation of the fire to an adjacent area causes loss of Division D power & control [1]	Division B & D power and control	

Table 57-7 (Sheet 3 of 15)

SUMMARY OF QUALITATIVE EVALUATION RESULTS – POWER OPERATION – PLANT EXCEPT CONTAINMENT AND MAIN CONTROL ROOM

Fire Area	Room or Area Description	Type	Fire Scenario	Safety System Failed	Non-Safety System Failed
			4. Propagation of the fire to an adjacent area causes loss of Division D power & control and spurious opening of ADS Stage 1, 2, 3 or Stage 4 [1] valves	Division B&D power and control	
1201 AF 03	Division D Batteries/DC Equipment/ I&C Room	TSFA	1. For fires confined in the area, loss of Division D power and control.	Division D power and control	
			2. For fires confined in the area, loss of Division D power and control and spurious opening of ADS valves due to fire-induced damage to Division D-related cabling that supports ADS Stage 1, 2, 3 or Stage 4 [1] valves	Division D power and control	
			3. Propagation of the fire to an adjacent area causes loss of Division D power & control	Division B & D power and control	
			4. Propagation of the fire to an adjacent area causes loss of Division B & D power and control and spurious opening of ADS Stage 1, 2, 3 or Stage 4 [1] valves	Division B & D power and control	
1201 AF 04	Division B/ D VBS Equipment	MSFA	1. For fires confined in the area, loss of Division B & D power and control and no spurious opening of ADS Stage 1, 2, 3 or Stage 4 [1] valves.	Division D power and control	
			2. Propagation of the fire to an adjacent area causes loss of Division D power & control, MFW, SFW CCS and CAS systems and chilled water service to the containment	Division D power and control	MFW, SFW, CCS, CAS and chilled water service to the containment

Table 57-7 (Sheet 4 of 15)

SUMMARY OF QUALITATIVE EVALUATION RESULTS – POWER OPERATION – PLANT EXCEPT CONTAINMENT AND MAIN CONTROL ROOM

Fire Area	Room or Area Description	Type	Fire Scenario	Safety System Failed	Non-Safety System Failed
1201 AF 05	MSIV Compartment A	MSFA	1 Systems with components and cabling located in this fire area are disabled resulting in loss of secondary-side cooling		One of two trains of MFW and SFW
			2 Propagation of the fire to an adjacent area causes loss of Division D power & control and secondary-side cooling	Division D power and control	One of two trains of MFW and SFW
			3. Propagation of the fire to an adjacent area causes loss of Division D power & control and spurious opening of ADS Stage 1, 2, 3 or Stage 4 valves	Division D power and control	One of two trains of MFW and SFW
1201 AF 06	MSIV Compartment B	MSFA	1 Fire in this fire area result in the loss of secondary-side cooling		One of two trains of MFW and SFW
			2 For fires propagating from this area, the fire scenario is bounded by that postulated above and loss of division B of power and control.	Division B power and control	MFWS, SFWS
			3 Propagation of the fire to an adjacent area causes loss of Division D power & control and spurious opening of ADS Stage 1, 2, 3 or Stage 4 valves	Division B power and control	MFWS, SFWS
1202 AF 02	Northeast Elevator Shaft	NSFA	1 Propagation of the fire to to area 1202 AF 04 result in loss of Division A power and control	Division A power and control	
			2 Propagation of the fire to to area 1202 AF 04 result in loss of Division A power and control and spurious actuation of ADS Stage 1, 2, 3 valves	Division A power and control	

Table 57-7 (Sheet 5 of 15)

SUMMARY OF QUALITATIVE EVALUATION RESULTS – POWER OPERATION – PLANT EXCEPT CONTAINMENT AND MAIN CONTROL ROOM

Fire Area	Room or Area Description	Type	Fire Scenario	Safety System Failed	Non-Safety System Failed
1202 AF 03	Division C Batteries/DC Equipment/ I&C Room/ RCP Trip Switchgear Room/I&C Penetration Room	TSFA	1. For fires confined in the area, loss of Division C power and control and Division C input to RCP trip switchgear.	Division C power and control and Division C input to RCP trip switchgear	
			2. For fires confined in the area, loss of Division C power and control and Division C input to RCP trip switchgear and spurious opening of ADS Stage 1, 2, 3 or Stage 4.	Division C power and control and Division C input to RCP trip switchgear	
			3 Propagation of the fire to an adjacent area causes loss of Division A and C power & control	Division A & C	
			4. Propagation of the fire to an adjacent area causes loss of Division A and C power & control and spurious opening of one ADS valve.	Division A & C	
1202 AF 04	Division A Electrical Equipment, Battery Room and I&C Room	TSFA	1. For fires confined in the area causes a loss of Division A power and control.	Division A	
			2. For fires confined in the area causes a loss of Division A power and control and spurious opening of one ADS Stage 1, 2, 3 or 4 valves.	Division A	
			3. Propagation of the fire to an adjacent area causes loss of Division A power and control	Division A & C	

Table 57-7 (Sheet 6 of 15)

SUMMARY OF QUALITATIVE EVALUATION RESULTS – POWER OPERATION – PLANT EXCEPT CONTAINMENT AND MAIN CONTROL ROOM

Fire Area	Room or Area Description	Type	Fire Scenario	Safety System Failed	Non-Safety System Failed
			4 Propagation of the fire to an adjacent area causes a loss of Division A & C power and control and spurious opening of ADS valves	Division A & C	
1204 AF 01	RNS Pump Room B	NFSA	1 Loss of one RNS pump		RNS Pump B
			2 Propagation of the fire to an adjacent area causes a loss of both RNS pumps and CVS makeup		RNS and CVS makeup
1204 AF 03	South Shield Building Elevator Shaft	NFSA	1. Propagation of the fire to an adjacent area causes a loss of one RNS pump and CVS makeup		RNS and CVS makeup
1205 AF 02	Southeast Elevator Shaft	NSFA	1 Propagation of the fire to an adjacent area causes a loss of one RNS pump and CVS makeup		RNS and CVS makeup
1210 AF 01	Corridor, Spare Battery Room, Spare Room, Spare Battery Charger Room	NFSA	1 Propagation of the fire to area 1202 AF 03 causes a loss of Division C power and control, Division C input to RCP trip switchgear	Division C power and control, Division C input to RCP trip switchgear	
			2 Propagation of the fire to area 1202 AF 03 causes a loss of Division C power and control, Division C input to RCP trip switchgear and spurious actuation of ADS valves	Division C power and control, Division C input to RCP trip switchgear	
1220 AF 01	Division B RCP Trip Switchgear/ Spare Room/ Corridor 82′ 6″	MSFA	1 For fires confined in the area, loss of Division B input to RCP trip switchgear and Division B and D reactor trip signals	Division B input to RCP trip switchgear and Division B and D reactor trip signals	

Table 57-7 (Sheet 7 of 15)

SUMMARY OF QUALITATIVE EVALUATION RESULTS – POWER OPERATION – PLANT EXCEPT CONTAINMENT AND MAIN CONTROL ROOM

Fire Area	Room or Area Description	Type	Fire Scenario	Safety System Failed	Non-Safety System Failed
			2. For fire propagating to area 1202 AF 03, loss of Division C power and control, Division B & C input to RCP trip switchgear and Division B and D reactor trip signals	Division C power and control, Division B & C input to RCP trip switchgear and Division B & D reactor trip signals	
			3 For fire propagating to area 1202 AF 03, loss of Division C power and control, Division B & C input to RCP trip switchgear and Division B and D reactor trip signals and spurious opening of 2 ADS Stage 4 valves.	Division C power and control, Division B & C input to RCP trip switchgear and Division B and D reactor trip signals	
1220 AF 02	Lower Annulus Valve Area	NSFA	1. Loss of CVS makeup and letdown and WLS		CVS makeup and letdown and WLS
1230 AF 01	Corridor Division A, B, C, D And Remote Shutdown Workstation	MSFA	1. Propagation of the fire to an adjacent area causes a loss of Division C power and control, Division C to the reactor trip switchgear.	Division C power and control	
			2. Propagation of the fire to an adjacent area causes a loss of Division C power and control, Division C to the reactor trip switchgear and spurious opening of ADS valves	Division C power and control	
1230 AF 02	Non Class 1E Equipment/ Penetration Room	MSFA	1. Loss of non-1E power to containment, DAS, Division B & D to the reactor trip switchgear and one RNS pump.	Division B & D to the reactor trip switchgear	Non-1E cables, DAS and one RNS pump
			2. Loss of non-1E power to containment, DAS, Division B & D to the reactor trip switchgear and one RNS pump and spurious actuation of ADS Stage 4 valves	Division B & D to the reactor trip switchgear	Non-1E cables, DAS and one RNS pump

Table 57-7 (Sheet 8 of 15)

SUMMARY OF QUALITATIVE EVALUATION RESULTS – POWER OPERATION – PLANT EXCEPT CONTAINMENT AND MAIN CONTROL ROOM

Fire Area	Room or Area Description	Type	Fire Scenario	Safety System Failed	Non-Safety System Failed
			3 Propagation of the fire to an adjacent area causes a loss of non-1E power to containment, DAS, Division B & D & C to the reactor trip switchgear and Division C power and control and one RNS pump.	Division B & D & C to the reactor trip switchgear and Division C power and control	Non-1E cables, DAS and one RNS pump
			4 Propagation of the fire to an adjacent area causes a loss of non-1E power to containment, DAS, Division B & D & C to the reactor trip switchgear and Division C power and control and spurious actuation of ADS Stage 1, 2, 3 or Stage 4 valves and one RNS pump	Division B & D & C to the reactor trip switchgear and Division C power and control	Non-1E cables, DAS and one RNS pump
1232 AF 01	Remote Shutdown Workstation	MSFA	1 Propagation of the fire to an adjacent area causes a loss of Division C power and control, Division C input to RCP trip switchgear	Division C power and control and Division C input to RCP trip switchgear	
			2 Propagation of the fire to an adjacent area causes a loss of Division C power and control, Division C input to RCP trip switchgear and spurious actuation of ADS Stage 1, 2, 3 or Stage 4 valves	Division C power and control and Division C input to RCP trip switchgear	
1240 AF 01	Non-Class 1E Electrical Compartment 117′	MSFA	1. For fires confined in the area, loss of Division A & C of reactor trip switchgear and one RNS pump.	Division A & C reactor trip switchgear	One RNS pump
			2. Propagation of the fire to an adjacent area causes a loss of Division A power and control, Division A & C of reactor trip switchgear and one RNS pump	Division A & C of reactor trip switchgear and Division A power and control	One RNS pump

Table 57-7 (Sheet 9 of 15)

SUMMARY OF QUALITATIVE EVALUATION RESULTS – POWER OPERATION – PLANT EXCEPT CONTAINMENT AND MAIN CONTROL ROOM

Fire Area	Room or Area Description	Type	Fire Scenario	Safety System Failed	Non-Safety System Failed
			3. Propagation of the fire to an adjacent area causes a loss of Division A power and control, Division A & C of reactor trip switchgear, one RNS pump and spurious opening of ADS valves	Division A & C of reactor trip switchgear and Division A power and control	One RNS pump
1242 AF 01	Main Control Room	MSFA	Detailed analysis of the MCR is presented in the quantitative analysis section.	See Paragraph 57.3.5	
1242 AF 02	Division A Penetration Area	TSFA	1. This fire scenario is bounded by loss of Division A power and control.	Division A power and control	
			2. This fire scenario is bounded by loss of Division A power and control and spurious opening of ADS Stage 1, 2, 3 or 4 valves	Division A power and control	
			3. Propagation of the fire to an adjacent area causes a loss of Division A & C power and control.	Division A & C power and control	
			4 Propagation of the fire to an adjacent area causes a loss of Division A & C power and control, .and spurious opening of ADS Stage 1, 2, 3 or 4 valves.	Division A & C power and control	
1243 AF 01	Reactor Trip Switchgear I	MSFA	1. For fires confined in the area, turbine trips with all PRA-credited systems other than reactor trip switchgear I is available.	Reactor trip switchgear I	
			2. Propagation of the fire to an adjacent area causes a loss of non-1E cables to the containment, DAS, reactor trip switchgear I and Division B & D to the reactor trip switchgear II	Reactor trip switchgear I and Division B & D to the reactor trip switchgear II	DAS

Table 57-7 (Sheet 10 of 15)

SUMMARY OF QUALITATIVE EVALUATION RESULTS – POWER OPERATION – PLANT EXCEPT CONTAINMENT AND MAIN CONTROL ROOM

Fire Area	Room or Area Description	Type	Fire Scenario	Safety System Failed	Non-Safety System Failed
			3 Propagation of the fire to an adjacent area causes a loss of non-1E cables to the containment, DAS, reactor trip switchgear I, Division B & D to the reactor trip switchgear II and spurious actuation of ADS Stage 1 and/or 2 and/or 3 valves	Reactor trip switchgear I, Division B & D to the reactor trip switchgear II	DAS
1243 AF 02	Reactor Trip Switchgear II	MSFA	1 For fires confined in the area, turbine trips with all PRA-credited systems other than reactor trip switchgear I is available	Reactor trip switchgear II	
			2 Propagation of the fire to an adjacent area causes a loss of Division B & D signals to the reactor trip switchgear I, Division C input to RCP trip switchgear, Division B & D I&C cables serving other safe shutdown components, and DAS	Reactor trip switchgear II and Division B & D to the reactor trip switchgear I, Division B & D I&C cables	DAS
			3. Propagation of the fire to an adjacent area causes a loss of Division B and D signals to the reactor trip switchgear I, Division C input to RCP trip switchgear, Division B & D I&C cables serving other safe shutdown components, DAS, and spurious opening of 1 ADS Stage 4 valve	Reactor trip switchgear II, Division B & D to the reactor trip switchgear I, and Division B & D I&C cables	DAS
1250 AF 01	Nuclear Island Non Radioactive System Main Control Room, Division A & C Equipment Room	NSFA	1. Fire in this fire area is postulated to result in loss of secondary side cooling by propagation to the Upper MSIV Compartment B		One train of MFW and SFW

Table 57-7 (Sheet 11 of 15

SUMMARY OF QUALITATIVE EVALUATION RESULTS – POWER OPERATION – PLANT EXCEPT CONTAINMENT AND MAIN CONTROL ROOM

Fire Area	Room or Area Description	Type	Fire Scenario	Safety System Failed	Non-Safety System Failed
2000 AF 01	Turbine Building Floor	NSFA	1. For fires confined in the area, the impact of fires is bounded by the loss of all non-safety-related PRA credited safe shutdown equipment, except RNS, and loss of off-site power		MFW, SFW, CCS, SWS, CAS, and LOSP
			2. For fires propagating from this area, the fire scenario is bounded by loss of Division D power and control (no spurious actuation), plus loss of service water, main feedwater, startup feed water, component cooling, instrument air service air systems and off-site power	Division D power and control	MFW, SFW, CCS, SWS, CAS, and Off-Site power
2003 AF 01	Aux Boiler Equipment Room	NSFA	1. For fires propagating from this area, loss of off-site power and loss of service water, main feedwater, startup feed water, component cooling, instrument air service air systems		MFW, SFW, CCS, SWS, CAS and Off-Site power
2009 AF 02	Elevator Machine Room	NFSA	1. For fires propagating from this area, loss of off-site power and loss of service water, main feedwater, startup feed water, component cooling, instrument air service air systems		MFW, SFW, CCS, SWS, CAS, and Off-Site power
2033 AF 02	Motor-Driven Fire Pump Room	NFSA	1. For fires propagating from this area, all non-safety-related PRA credited systems are assumed to be unavailable except RNS.		MFW, SFW, CCS, SWS, CAS, and Off-Site power
2040 AF 01	Clean & Dirty Lube Oil Storage	NSFA	1. For fires propagating from this area, all non-safety-related PRA credited systems are assumed to be unavailable except RNS.		MFW, SFW, CCS, SWS, CAS, and Off-Site power

Table 57-7 (Sheet 12 of 15)

SUMMARY OF QUALITATIVE EVALUATION RESULTS – POWER OPERATION – PLANT EXCEPT CONTAINMENT AND MAIN CONTROL ROOM

Fire Area	Room or Area Description	Type	Fire Scenario	Safety System Failed	Non-Safety System Failed
2043 AF 01	Secondary Sampling Laboratory	NSFA	1 For fires propagating from this area, loss of the ECS-ES-4 6 9kV bus and loss of service water, main feedwater, startup feed water, component cooling, instrument air service air systems		MFW, SFW, CCS, SWS, CAS, and Off-Site power
2050 AF 01	Lube Oil Conditioner Room	NSFA	1 For fires propagating from this area, all non-safety-related PRA credited systems are assumed to be unavailable except RNS		MFW, SFW, CCS, SWS, CAS, and Off-Site power
2052 AF 01	Switchgear Room 1	NSFA	1 For fires propagating from this area, the impact of fires is bounded by the loss of all non safety-related PRA credited safe shutdown equipment, except RNS, and loss of off-site power		MFW, SFW, CCS, SWS, CAS, and LOSP
2053 AF 01	Generator Panel Room	NFSA	1. For fires confined in this area, loss of main generator.		Main generator
			2. For fires propagating from this area, the impact of fires is bounded by the loss of all non safety-related PRA credited safe shutdown equipment, except RNS, and loss of off-site power		MFW, SFW, CCS, SWS, CAS, and LOSP
2053 AF 02	Switchgear Room 2	NSFA	1 For fires propagating from this area, the impact of fires is bounded by the loss of all non safety-related PRA credited safe shutdown equipment, except RNS, and loss of off-site power.		MFW, SFW, CCS, SWS, CAS, and LOSP
4003 AF 01	Demineralized Water Deoxygenating Room/Air Handling Equipment Rooms	NSFA	1 For fires propagating out of this area, loss of RNS and CVS systems is assumed		CVS and one RNS train

Table 57-7 (Sheet 13 of 15)

SUMMARY OF QUALITATIVE EVALUATION RESULTS – POWER OPERATION – PLANT EXCEPT CONTAINMENT AND MAIN CONTROL ROOM

Fire Area	Room or Area Description	Type	Fire Scenario	Safety System Failed	Non-Safety System Failed
4031 AF 01	Battery Room And Battery Charger Room 1	NSFA	1. For fires confined in the area, loss of one division of non-safety-related DC power.		EDS-1 & EDS-3 non-safety-related AC/DC
			2. For fire propagating out of this area, loss of all divisions of non safety-related AC/DC power.		All divisions of non-safety-related AC/DC
4031 AF 02	Battery Room And Battery Charger Room 2	NSFA	1. For fires confined in the area, loss of one division of non-safety-related AC/DC power is postulated		EDS-2 & EDS-4 non-safety-related AC/DC
			2. For fire propagating out of this area, loss of all divisions of non safety-related AC/DC power.		All divisions of non-safety-related AC/DC
4031 AF 05	Access Area, Access Corridor, Security Room 2, Corridor, Rest Room	NSFA	1. For fires confined in the area, loss of one train of all systems in turbine buildng		One train of MFW, SFW, CCS, SWS, and CAS
			2. Propagation of the fire to an adjacent area causes a loss of Division A and one train of MFW, SFW, CCS, SWS, and CAS.	Division A power and control	One train of MFW, SFW, CCS, SWS, and CAS
			3. Propagation of the fire to an adjacent area causes a loss of Division A and one train of MFW, SFW, CCS, SWS, and CAS, and spurious opening of ADS Stage 1, 2, 3 valves	Division A power and control	One train of MFW, SFW, CCS, SWS, and CAS
4031 AF 06	Central Alarm Station, Security Room 1	NSFA	1. Propagation of the fire to an adjacent area causes a loss of Group 1 of non-1E Power and control.		Group 1 of non-1E power and control

Table 57-7 (Sheet 14 of 15)

SUMMARY OF QUALITATIVE EVALUATION RESULTS – POWER OPERATION – PLANT EXCEPT CONTAINMENT AND MAIN CONTROL ROOM

Fire Area	Room or Area Description	Type	Fire Scenario	Safety System Failed	Non-Safety System Failed
4032 AF 01	De-contamination Room Non-Radiological and Radiological Controlled Area Entries	NSFA	1 For fires confined in the area, loss of one division of non-safety-related AC/DC power		One division of non-safety-related AC/DC power, automatic DAS
			2. Propagation of the fire to an adjacent area causes a loss of 2 divisions of non safety-related AC/DC power.		Two divisions of non-safety-related AC/DC power
4032 AF 02	Containment Access Corridor El 107'2"	NSFA	1 Propagation of the fire to an adjacent area causes a loss of Group 2 of non-1E AC/DC power (DAS available)		Group 2 of non-1E AC/DC power (loss of automatic DAS)
4033 AF 01	Hot Machine Shop, Pump Seal Shop	NSFA	1 Propagation of the fire to an adjacent area causes a loss of one train of RNS and CVS		CVS and one train of RNS
4034 AF 01	General Offices	NSFA	1 Propagation of the fire to an adjacent area causes a loss of 1 group of non-1E AC/DC power, loss of DAS (induced by the loss of one non-1E division)		Group 1 of non-1E AC/DC power, loss of DAS
4041 AF 01	Conference Rooms/ Computer Room A/ Corridor.	NSFA	1 For fires confined in the area, loss of one division of non-safety-related AC/DC power (induces the loss of automatic DAS)		Group 1 of non-1E AC/DC power, automatic DAS
			2 Propagation of the fire to 4031 AF 02 causes the loss of all non-1 E power		All divisions of non-1 E power
4041 AF 02	Corridor/ restroom	NSFA	1 For fires confined in the area, loss of one division of non-safety-related AC/DC power		Group 1 of non-1E AC/DC power, automatic DAS
			2 Propagation of the fire to an adjacent area causes a loss of non-1E AC/DC power DAS (induced by the loss of one non-1E division)		All divisions of non-1E AC/DC power, automatic DAS

Table 57-7 (Sheet 15 of 15)

SUMMARY OF QUALITATIVE EVALUATION RESULTS – POWER OPERATION – PLANT EXCEPT CONTAINMENT AND MAIN CONTROL ROOM

Fire Area	Room or Area Description	Type	Fire Scenario	Safety System Failed	Non-Safety System Failed
4042 AF 01	Non-Class 1E Switchgear #1	NSFA	1. For fires confined in the area, loss of one division of non-safety-related AC/DC power.		Group 1 of non-1E AC/DC power
			2. Propagation of the fire to 4031 AF02 causes the loss of non-1E AC/DC power.		All divisions of non-1E AC/DC power, DAS
4042 AF 02	Non-Class 1E Switchgear #2	NSFA	1. For fires confined in the area, loss of one division of non-safety-related AC/DC power		Group 2 of non-1E AC/DC power, automatic DAS
			2. Propagation of the fire to an adjacent area causes a loss of non-1E AC/DC power		All divisions of non-1E AC/DC power, automatic DAS
4052 AF 01	Staging and Storage Area, Containment Air Filtration Exhaust Rooms A & B	NSFA	1. Propagation of the fire to an adjacent area causes a loss of non-1E AC/DC power		Group 1 of non-1E AC/DC power, loss of automatic DAS
5031 AF 01	Radwaste Building	NSFA	1. Propagation of the fire to an adjacent area causes a loss of CVS and one train of RNS		CVS and one train of RNS
6030 AF 01	DG Room A	NSFA	1. Propagation of the fire to an adjacent area causes a loss of one diesel generator.		1 diesel generator
6030 AF 02	DG Room B	NSFA	1. Propagation of the fire to an adjacent area causes a loss of one diesel generator.		1 diesel generator
6030 AF 03	Fuel Oil Day Tank Room A	NSFA	1. Propagation of the fire to an adjacent area causes a loss of one diesel generator.		1 diesel generator
6030 AF 04	Fuel Oil Day Tank Room A	NSFA	1. Propagation of the fire to an adjacent area causes a loss of one diesel generator.		1 diesel generator

Note:

1. See above "Definition of the fire scenarios for the 1E-electrical division areas" and Event Trees in Appendix C.

Comments and Explanations for Table 57-7:

The different scenarios come from the AP600 study However, because of changes in design or because there is more information, all of the scenarios have been reviewed and changed when necessary. In those cases, some explanations are given below for each area

Area 1200 AF 03 (Corridors 100' & 117' 6"):
The DCD (Reference 2) assumes the loss of all I&C cables for Divisions B and D. Actually, no cables dedicated to any ADS valves are in this area. However, there are DAS cables for manual actuation of ADS Stage 4 valves So, spurious actuation of ADS Stage 4 is possible, but ADS Stage 4 supplied by Divisions B and D is still available.

Area 1201 AF 02 (Division B Batteries/Dc Equipment Room/Instrumentation and Control):
Severe propagation may be experienced from any of the following losses

- B and D reactor trip signals (area 1220 AF 01)
- One division power and control, either Division C or D
- Non safety-related systems (Turbine Building)
- Main Control Room
- Remote Shutdown Workstation (loss of Human factor)

Propagation to Division D may lead to either spurious actuation of ADS or unavailability of 2 Stage 4 squib valves. This case is considered as the most severe.

Area 1201 AF 04 (Division B/D VBS Equipment):
The fire may propagate either to the Division D that is already lost or to one of the lower MSIV Compartments (A or B) with the loss of the Main Feed Water and the Start-up Feed Water Spurious opening of ADS valves that would be induced would have a very low probability of occurrence Propagation to the Turbine Building is not credited because of the fire suppression systems in it that reduce the probability of damages by a factor 20.

Area 1202 AF 02 (Northeast Elevator Shaft):
The most severe propagation is either with loss of Division B and D reactor trip signals (area 1220 AF 01) or with loss of Division A power and control (1202 AF 04) Results of AP 600 Fire PRA (Reference 3) show that the Conditional Core Damage Probability (CCDP) is much higher for a fire in fire area 1202 AF 04.

Area 1202 AF 03 (Division C Batteries/DC Equipment/I&C Room/RCP Trip Switchgear Room/I&C Penetration Room):
Severe propagation may be experienced from any of the following losses

- B and D reactor trip signals (area 1220 AF 01)
- One division power and control, either Division A or B
- Non safety-related systems (Turbine Building)
- Main Control Room
- Remote Shutdown Workstation (loss of Human factor).

It is assumed that the propagation would be to the Division A Penetration Room with a loss of Division A (1242 AF 02) with the possibility of spurious actuation of Stage 1, 2, 3 or 4 ADS valves.

Area 1202 AF 04 (Division A Electrical Equipment/Battery Room/I& C Room):
Severe propagation may be experienced from any of the following losses:

- B and D reactor trip signals (area 1220 AF 01)
- Division C power and control
- Non safety-related systems (Turbine Building)
- Main Control Room

It is assumed that the propagation would be to Division C.

Area 1204 AF 01 (RNS Pump Room B):
According to Reference 1 there is an RNS pump and two RNS exchangers located in this fire area. Propagation is possible only to 1200 AF 01 with a loss of both RNS and CVS Systems. Conservatively, it is considered to be a single scenario with a loss of RNS and CVS Systems

Area 1230 AF 01 (Corridor Division A, B, C, D and Remote Shutdown Workstation):
According to the designers, fire in this corridor leads to the loss of data communication between Division A and C and Division B and D without severe effect. The most severe propagation seems to be to the Division C power and control. Propagation may occur to one of the divisions or to the Remote Shutdown Workstation or to the Main Control Room. It is assumed that propagation would be to the Main Control Room

Area 1230 AF 02 (Non-Class 1E Equipment/Penetration Room):
According to the DCD (Reference 2) and to the designers, this fire area contains Division B and D cables to the reactor trip switchgear, non-1E cables and DAS cables. A fire in this area would therefore cause the loss of all of these cables. The most severe propagation would seem to be to the Division C power and control.

Area 1243 AF01 (Reactor Trip Switchgear I):
It is assumed that propagation would be to fire area 1230 AF 01 with mainly a loss of the DAS and non-1E cables to the Containment.

Area 1243 AF02 (Reactor Trip Switchgear II):
It is assumed that propagation would be to fire area 1200 AF 03 with mainly a loss of Division B and D I&C and DAS cables to the ADS Stage 4 valves

Areas 1204 AF 03 (South Shield Building Elevator Shaft) and 1205 AF 02 (Southeast Elevator Shaft):
There are no systems in this area; however, in case of a fire the risk comes from the possible propagation to 1200 AF 01.

Area 1210 AF 01 (Corridor/Spare Battery Room/Spare Room/Spare Battery Charger Room):
The most severe propagation is to Division C power and control or to the Turbine Building. The Conditional Core Damage Frequency for these two areas (i.e. core damage frequency/fire ignition frequency) is higher for loss of Division C power and control.

Area 1220 AF 01 (Division B RCP Trip Switchgear/Spare Room/Corridor 82' 6"):
The most severe propagation is either to one electrical division or to fire area 1200 AF 01 (loss of the RNS and CVS Systems) or to 1201 AF 05 (loss of MFWS and SFWS Systems). It is assumed the most severe case would be to one electrical division (Division C).

Area 1220 AF 02 (Lower Annulus Valve Area):
This fire area contains CVS and the WLS System components (Reference 9). The loss of CVS and WLS Systems is conservatively assumed.

Area 1232 AF 01 (Remote Shutdown Workstation):
Propagation from this fire area would be to the Main Control Room or to Division C. The risk induced by propagation to the MCR would be very low as the fire would have to penetrate through a common 3-hour fire rated barrier. And during this time the operating team would have sufficient time to shutdown the reactor in anticipation of propagation to the MCR. Therefore, the most severe case would be propagation to one safety-related division of power and control (Division C).

Area 1242 AF 02 (Division A Penetration Area):
The most severe propagation is either to Division C or to the Main Control Room. Propagation to the Main Control Room may be anticipated.

Area 1250 AF 01 (Nuclear Island Non Radioactive System Main Control Room/Division A and C Equipment Room):
The fire may propagate either to the Main Control Room or to fire area 1201 AF 06 The risk induced by propagation to the MCR would be very low as the fire would have to penetrate through a common 3-hour fire rated barrier. And during this time the operating team would have sufficient time to shutdown the reactor in anticipation of propagation to the MCR Therefore, the most severe case would be propagation to fire area 1201 AF 06

Area 2000 AF 01 (Turbine Building Floor):
There are three possibilities of propagation of fire from this area. corridor (1230 AF 01), lower VBS Division B and D Equipment Room (1201 AF 04); or, to the Main Control Room Propagation to the MCR is not considered because the reactor is already in a shutdown mode and the operating team would have time to switch off the equipment in the MCR and evacuate to the Shutdown Remote Workstation

According to the designers, propagation to the corridor leads to the loss of data communication between Divisions A and C and Divisions B and D without severe effect. Propagation to the lower VBS Divisions B and D Equipment Room would lead to a loss of isolating valves supported by Division D. There is no possibility of spurious actuation of ADS valves but a loss of Division D power and control is conservatively assumed

Area 2003 AF 01 (Auxiliary Boiler Equipment Room):
Propagation would be either to the fire area 2052 AF 01, or to fire area 2053 AF 01 with loss of off-site power. A severe loss would not be anticipated if the fire propagated to the main area of the Turbine Building because of the automatic fire suppression system in this area would reduce the risk of damage by a factor 20

Area 2009 AF 02 (Elevator Machine Room):
Propagation is possible only to the outside the building but would damage the AC-power cables that run along the exterior wall. Propagation to the main area of the Turbine Building is not credited because of the automatic fire suppression system in this area (idem 2003 AF 01)

Area 2043 AF 01 (Secondary Sampling Laboratory):
Propagation is possible only to 2053 AF 02 with a loss of the ECS-ES-4 6 9 kV bus Propagation to the main area of the Turbine Building is not credited because of the automatic fire suppression system in this area (idem 2003 AF 01)

Area 2052 AF 01 (Switchgear Room 1), 2053 AF 02 (Switchgear Room 1) and 2053 AF 01 (Generator Panel Room):
It is conservatively assumed that there would only be a loss of electrical supply to the Turbine Building equipment.

Area 4003 AF 01 (Demineralized Water Deoxygenating Room/Air Handling Equipment Rooms):
According to the designers, there is no PRA credited in this area. However, the fire may propagate to the area 1200 AF 01 with loss of the CVS System and one train of the RNS System.

Area 4031 AF 05 (Access Area, Access Corridor, Security Room 2, Corridor, Rest Room):
Propagation is possible to either one non-1E division, to Division A through the common wall between the Annex and Auxiliary Buildings, or to the Turbine Building. Propagation to the main area of the turbine building is not credited because of the automatic fire suppression system in this area (idem 2003 AF 01)

Area 4033 AF 01 (Hot Machine Shop/Pump Seal Shop):
Propagation would be to fire area 1200 AF 01 in the Auxiliary Building with a loss of the CVS System and one train of the RNS System

Area 5031 AF 01 (Radwaste Building):
Propagation is assumed in case of a failure of the fire barrier or if the automatic fire suppression system fails There are two rooms without automatic fire suppression system but because there is no common barrier between these rooms and other areas, the only way for fire originating in those rooms to propagate is to the rest of the Radwaste Building where there are automatic fire suppression systems

Area 6030 AF 01 (DG Room A) and 6030 AF 02 (DG Room B):
The main risk of fire ignition is the diesel generator located in each area. However, each diesel generated is protected by an automatic fire suppression system. Propagation to the next area is considered only in case of failure of the fire suppression system.

Definition of the Fire Scenarios For The 1E-Electrical Division Areas:
These areas are very sensitive because a fully developed fire in one area may induce a spurious actuation of one or more ADS valves (Stage 1, 2, 3 or 4). Propagation from one division fire area to its associative division fire area (A for C and B for D) may lead to a spurious actuation of one of the three first stage ADS squib valves and the unavailability of two Stage 4 ADS squib valves.

The success criteria for the depressurization of the Reactor Coolant System (RCS) in AP1000 PRA, is that three of four Stage 4 valves must be open. The risk induced by the fire in these areas needs to be assessed with a higher level of detail than for other areas where the general and conservative assumptions are sufficient to show that the risk is low. This specific application also allows credit to be given to any design changes that could be made to avoid spurious actuation of ADS squib valves.

Credit may be given for human actions to deactivate the electrical cabinets in the I&C Rooms or in the Electrical Penetration Rooms to avoid spurious actuation of an ADS squib valve. For more detail, see the Event Tree in Attachment 57C. The failure probability of this action is 0.03.

Table 57-8 (Sheet 1 of 4)

SUMMARY OF QUALITATIVE EVALUATION RESULTS FOR CONTAINMENT AT POWER OPERATION

Fire Zone	Room or Area Description	Fire Scenario	Safety System Failed	Non-Safety System Failed
1100 AF 11204	Reactor Coolant Drain Tank Room	1 Loss of WLS System		WLS
1100 AF 11206	PXS Valve/ Accumulator Room A	1 Malfunction of power and control to all energized valves located in the zone MOVs for CMT, and IRWST/containment sump recirculation line isolation valves supported by Divisions B and D of power and control remains closed, loss of accumulator	Valves V117A, V118A, V120A, V123A, V125A	Accumulator
1100 AF 11207	PXS Valve/ Accumulator Room B	1. Malfunction of power and control to all energized valves located in the zone. That is, MOVs for CMT, and IRWST/containment sump recirculation line isolation valves supported by Divisions A and C of power and control remains closed.	Valves V117B, V118B, V120B, V123B, V125B	
1100 AF 11208	RNS Valve Room	1 Loss of RNS MOV-023	RNS-MOV-023	
1100 AF 11300A	Maintenance Floor	1 Loss of CMT-A , MFW, SFW	One CMT[1]	MFW, SFW
		2 For fire propagating from this area, loss of Division A & C, loss of 2 CMTs, loss of one PRHR isolation valve, loss of non-1E divisions, loss of DAS, MFW, SFW,CCS	Division A & C, 2 CMTs, and one PRHR isolation valve1	All divisions of non-1E divisions, loss of DAS, MFW, SFW, CCS

Table 57-8 (Sheet 2 of 4)

SUMMARY OF QUALITATIVE EVALUATION RESULTS FOR CONTAINMENT AT POWER OPERATION

Fire Zone	Description	Fire Scenario	Damage to Safety System Component	Non-Safety System Failed
1100 AF 11300B	Maintenance Floor	1. Loss of one PRHR isolation valve, loss of one CCS flow path to the containment, loss CMT-B due to damage to CMT-A-related cabling, loss of Division A & C, loss of DAS, MFW, SFW & CVS	One CMT-B, Division A & C, and one PRHR isolation valve	One CCS flow path to the containment, all divisions of non-1E electrical, DAS, MFW, SFW and CVS
		2. Loss of one PRHR isolation valve, loss of one CCS flow path to the containment, loss CMT-A due to damage to CMT-A related cabling. Spurious opening of ADS valves (Stage 1, 2 or 3) loss of DAS, MFW, SFW & CVS	One CMT, Division A & C, and one PRHR isolation valve	One CCS flow path to the containment, all divisions of non-1E electrical, DAS, MFW, SFW and CVS
		3. For propagation from area, loss of CMT-A., MFW, SFW	One CMT[1]	MFW, SFW
1100 AF 11301	SG Compartment 1	1. Loss of secondary side cooling and loss of two Stage 4 ADS valve (Division A & C).	Two ADS Stage 4 squib valves unavailable	MFW, SFW
		2. Loss of secondary side cooling and spurious opening of ADS Stage 4 valves.	Spurious opening of two ADS Stage 4 squib valves	MFW, SFW
1100 AF 11302	SG Compartment 2	1. Loss of secondary side cooling and loss of two Stage 4 ADS valve (Division B & D).	Two ADS Stage 4 ADS valve unavailable	MFW, SFW
		2. Loss of secondary side cooling and spurious opening of ADS valves.	Spurious opening of two ADS Stage 4 squib valves	MFW, SFW
1100 AF 11303	Pressurizer Compartment	1. Loss of auto-actuation of the CMTs.	Degraded CMT	
1100 AF 11303A	ADS Lower Valve Area	1. Failure of ADS valves supported by Divisions B and D power and control.	One ADS Stage 1, 2 or 3 valves unavailable	

Table 57-8 (Sheet 3 of 4)

SUMMARY OF QUALITATIVE EVALUATION RESULTS FOR CONTAINMENT AT POWER OPERATION

Fire Zone	Description	Fire Scenario	Damage to Safety System Component	Non-Safety System Failed
		2 Spurious opening of the ADS Stage 1, 2, and 3 valves supported by Divisions B and D power and control	Spurious opening of the ADS Stage 1, 2, and 3 valves supported by Divisions B and D	
1100 AF 11303B	ADS Upper Valve Area	1. Failure of ADS valves supported by Divisions A and C of safety-related power	One ADS Stage 1, 2 or 3 valves unavailable	
		2 Spurious opening of Stage 1, 2, and 3 ADS valves supported by Divisions A and C power and control	Spurious opening of the Stage 1, 2, and 3 ADS valves supported by Divisions B and D; Divisions A and C power and control	
1100 AF 11500	Operating Deck	1 Loss of Divisions B and D of safety-related power, loss of MFW and SFW	Division B & D power and control	MFW and SFW
		2 Spurious opening of Stage 1, 2, and 3 ADS valves supported by Divisions B and D power and control	Spurious opening of the Stage 1, 2, and 3 ADS valves supported by Division B & D; Division B & D power and control	MFW and SFW
1200 AF 2341	Middle Annulus	1. For fire contained in this area, loss of non-1E electrical division to the Containment and DAS		Non-1E electrical division, DAS
		2. For fire propagating from this area, loss of Division A power and control and non-1E electrical division to the Containment and DAS	Division A power and control	Non-1E electrical division, DAS

Table 57-8 (Sheet 4 of 4)

SUMMARY OF QUALITATIVE EVALUATION RESULTS FOR CONTAINMENT AT POWER OPERATION

Fire Zone	Description	Fire Scenario	Damage to Safety System Component	Non-Safety System Failed
		3. For fire propagating from this area, loss of Division A power and control, non-1E electrical division to the Containment, DAS, and spurious opening of one ADS Stage 1 or 2 or 3 valve.	Division A power and control	Non-1E electrical division, DAS
1250 AF 12555	Main Control Room Emergency Habitability System Air Storage/ Operating Deck Staging Area	1. For fire propagating from this area, loss of CVS and one train of the RNS Systems		CVS and one train of RNS

Note:
1. Loss of signals to CMT results in the opening of the CMT valves.

Comments and Explanations for Table 57-8:

The different scenarios come from the AP600 study However, because of changes in design or because there is more information available, all the scenarios have been reviewed and changes were made where needed. In those cases, some explanations are given below for each area:

Area 1100 AF 11300A and 113000B (Maintenance Floor):
The FIVE methodology (Reference 5) states that a qualitative evaluation is sufficient for the Containment It does not demand a detailed fire PRA assessment of the risk induced by fire in the Containment, mainly based on the fact that many years of plant's operation have shown a very low risk of fire in the Containment.

Despite this, The AP600 project decided to do the fire PRA analysis for fire in the Containment To be consistent with the AP600 study, AP1000 also evaluated the risk induced by fire inside the Containment. But for the two zones (1100 AF 11300A and 113000B), the risk of damages by fire has increased, because of the fire ignition probability and the combustible loadings have changed. The reason for this rise is attributed to a better understanding of the installation than to changes in design

Being consistent with the fire methodology, we assess quantitatively the risk of fire in these two zones on the basis of a qualitative analysis of the design.

Fire Zone 11300A:
The fire could propagate to fire zones 11300B, 11500 (Refueling Cavity) and 11302 (SG2 Lower Manway Area)

The area is open at the top, allowing evacuation of smoke and cooling of the room Propagation to the Zone 11500 is not credible because of a thick steel wall and even with propagation there is no important component close to the Zone 11300A

Propagation to the Zone 11300B is also possible, as there is no barrier between these two zones However, the design tends to avoid propagation by respecting a distance between combustible materials The section of Zone 11300B nearest to the Zone 11300A contains mainly non-1E electrical cables These non-1E electrical cables are protected by a manually actuated fire suppression system. If a fire were to start in Zone 11300A, it would be detected before propagation could happen and the fire suppression system would be rapidly actuated Therefore, it is assumed that propagation from the Zone 11300A to the Zone 11300B would have a probability of 0.01 (distance) and only if the fire suppression system fails (0 08).

Propagation to the Zone 11302 is not credited because of a thick concrete wall and because this wall will not over heat because of vent openings in the 11300A ceiling.

Fire Zone 11300B:
The combustible loading of this zone comes mainly from Division A and C cable insulation located in the north and west part of the zone, (on the maintenance floor mezzanine) and non-1E electrical division cable insulation located in the east part of the zone.

The DAS cables that actuate the Division A &C ADS Stage 4 squib valves within the Containment are separated as much as possible by distance from the Division A and C cabling This AP1000 design ensures that if a fire were to occur in the Containment and destroy Division A and C cabling DAS would still be functional (correspondence from F. T Johnson, see Reference 15). A Containment fire would have to be great enough to engulf the entire area to lose all of Division A and C cabling and the corresponding DAS cables As combustible loading within the Containment is mainly composed of non-propagating cable insulation the probability of propagation would be low approximately 0 01 This low probability of propagation reflects an improbable failure in the design. The main source of ignition is the electrical cabinets located on the maintenance floor mezzanine in the western part of the zone

Again due to the distance separating the Division A and C from Division B and D, it is assumed that there is little to no possibility of fire propagation between them. Division B and D are located in the north section of Zone 11500 The

probability of propagation would be low and given a value of 0.01 but because a steel wall also protects Division B and D cable propagation is not credited. The AP1000 design allows cooling of Division B and D cables, by air current, in case of fire in 11300B.

If a fire were to occur in the electrical cabinets, Division A and C would fail and the fire might propagate to the non-1E electrical division (probability of 0.01) if the fire suppression system protection fails or is not manually actuated. There is a low probability of 0.01 that the fire could propagate to Zones 11300B and 11302.

If the fire were to start in any part of this fire zone other than the cabinets, the fire would propagate and damage A and C cables and the DAS cables related to squib valves supplied by Division A and C with a probability of respectively 0.01 and 0 01*0.08.

In the case the fire does not spread in this section of the Containment, it would be conservatively assumed that there would be a loss of Division A and C, one CMT, one PRHR isolation valve and of one train of the CCS System

The fire zones below have been reviewed in accordance with Reference 9.

Zone 1100 AF 11204 (Reactor Coolant Drain Tank Room):
A fire in this zone would cause the loss of the WLS System.

Zone 1100 AF 11300A (Maintenance Floor):
A fire in this zone would cause the loss of CMT Unit A and steam generator instrumentation. Loss of the steam generator instrumentation would cause the loss of the feed water systems.

1100 AF 11301 (SG Compartment 1):
A fire in this area would cause the loss of 2 Stage 4 squib valves, the Main Feedwater and the Startup Feedwater Systems. This is similar to AP600 analysis of this area.

1100 AF 11303A (ADS Upper Valve Area):
A fire in this zone would cause the loss of Stage 1, 2 and 3 ADS valves that are powered by Division B and D. A fire in Zone 1100 AF 11303B would cause the loss of Stage 1, 2 and 3 ADS valves that are powered by Division A and C. A conservative risk analysis is performed for a spurious actuation of one ADS valve.

1100 AF 11500 (Operating Deck):
The DCD (Reference 2) states that Division B and D cables are located in the northern part of this zone (Penetration Zone). Other design information (Reference 9) confirms the existence of steam generator instrumentation in the western area of the zone. A fire would cause the loss of Division B and D, the Main Feedwater and Startup Feedwater Systems

The main risk of ignition comes from the transformers located on the Operating Deck situated in the western section of the zone. As there is a significant distance between the transformers and Division B and D cables, there is little to no possibility of propagation of fire from the transformers to the cables.

Table 57-9 (Sheet 1 of 5)

SUMMARY OF RESULTS

Fire Area	Description	Fire Frequency	CDF	Area Risk/Total Risk for the Building	Area Risk/Total Risk for the Reactor
0000 AF 00	Yard Building (Including Transformer Yard)	2.00E-02	2 04E-09	100 00%	3 63%
1200 AF 01	RCA of Auxiliary Building (All Zones)	1.81E-02	2.35E-10	1 42%	0 42%
1200 AF 02	New Fuel and Used Fuel Storage, Waste Disposal Container (All Zones)	1.10E-03	2.34E-14	0 00%	0 00%
1200 AF 03	Corridors 100' & 117' 6"	1 63E-03	6 65E-09	40 12%	11 85%
1201 AF 02	Division B Batteries/DC Equipment Room/ Instrumentation and Control	3 73E-03	2 06E-09	12 44%	3.67%
1201 AF 03	Division D DC Equipment/I&C	3 04E-03	1.28E-09	7.74%	2.29%
1201 AF 04	Division B/D VBS Equipment	3 60E-04	3.05E-11	0.18%	0.05%
1201 AF 05	MSIV Compartment A	6 60E-04	1.11E-10	0.67%	0.20%
1201 AF 06	MSIV Compartment B	3 31E-04	5.58E-11	0.34%	0.10%
1202 AF 02	Northeast Elevator Shaft	1 17E-03	6.80E-11	0.41%	0.12%
1202 AF 03	Division C Batteries/DC Equipment/I&C Room/RCP Trip Switchgear Room/I&C Penetration Room	4 45E-03	1 77E-09	10 66%	3.15%
1202 AF 04	Division A Electrical Equipment/Battery Room/I&C Room	3 00E-03	6 39E-10	3.86%	1.14%
1204 AF 01	RNS Pump Room B	4 97E-03	1.27E-11	0.08%	0.02%
1204 AF 03	South Shield Building Elevator Shaft	1 17E-03	2.98E-14	0.00%	0.00%
1205 AF 02	Southeast Elevator Shaft	1 17E-03	2.98E-14	0.00%	0.00%

Table 57-9 (Sheet 2 of 5)

SUMMARY OF RESULTS

Fire Area	Description	Fire Frequency	CDF	Area Risk/Total Risk for the Building	Area Risk/Total Risk for the Reactor
1210 AF 01	Corridor/Spare Battery Room/Spare Room/Spare Battery Charger Room	1.47E-03	1.75E-10	1.06%	0.31%
1220 AF 01	Division B RCP Trip Switchgear/Spare Room/Corridor 82' 6"	4.43E-03	5.98E-10	3.61%	1.07%
1220 AF02	Lower Annulus Valve Area	1.71E-04	3.59E-13	0.00%	0.00%
1230 AF 01	Corridor Division A, B, C, D and Remote Shutdown Workstation	1.71E-04	6.12E-13	0.00%	0.00%
1230 AF 02	Non-Class 1E Electrical Compartment - 100'	1.56E-03	2.24E-09	13.50%	3.99%
1232 AF 01	Remote Shutdown Workstation	1.32E-04	1.57E-11	0.09%	0.03%
1240 AF 01	Non-Class 1E Electrical Compartment - 117'	1.55E-03	2.79E-10	1.68%	0.50%
1242 AF 02	Division A Penetration Area	3.33E-04	1.61E-10	0.97%	0.29%
1243 AF 01	Reactor Trip Switchgear I	2.84E-03	7.01E-11	0.42%	0.12%
1243 AF 02	Reactor Trip Switchgear II	2.84E-03	1.22E-10	0.73%	0.22%
1250 AF 01	Nonradioactive Ventilation System	2.68E-03	2.07E-12	0.01%	
Total Auxiliary Building		6.31E-02	1.66E-08		29.53%
2000 AF 01	Turbine Building Floor	6.47E-02	5.10E-09	84.91%	9.08%
2003 AF 01	Auxiliary Boiler Equipment Room	1.23E-03	2.51E-12	0.04%	0.00%
2009 AF 02	Elevator Machine Room	1.17E-03	1.19E-12	0.02%	0.00%
2033 AF 02	Motor-Driven Fire Pump Room	1.01E-03	3.90E-14	0.00%	0.00%

Table 57-9 (Sheet 3 of 5)

SUMMARY OF RESULTS

Fire Area	Description	Fire Frequency	CDF	Area Risk/Total Risk for the Building	Area Risk/Total Risk for the Reactor
2040 AF 01	Clean and Dirty Lube Oil Storage	2 83E-04	2 19E-14	0 00%	0 00%
2043 AF 01	Chemical Laboratory	3 23E-04	4.99E-15	0.00%	0 00%
2050 AF 01	Lube Oil Conditioner Room	2 83E-04	5.47E-14	0.00%	0 00%
2052 AF 01	Southwest 6 9KV Switchgear Room	2 48E-03	1.92E-10	3.19%	0 34%
2053 AF 01	Electrical Equipment Room	6.70E-03	5.18E-10	8 63%	0 92%
2053 AF 02	Northwest 6.9KV Switchgear Room	2.48E-03	1 92E-10	3 19%	0.34%
Total Turbine Building		8 07E-02	6 00E-09		10 69%
4003 AF 01	Demineralized Water Deoxygenating Room/Air Handling Equipment Room	4 26E-03	1 09E-13	0 00%	0.00%
4031 AF 01	Battery Room and Battery Charger Room 1	2 87E-03	3 96E-09	45 80%	7 06%
4031 AF 02	Battery Room and Battery Charger Room 2/Computer Room B/Shift Turnover Room	3 14E-03	4.33E-09	50 14%	7 72%
4031 AF 05	Access Area, Access Corridor, Security Room 2, Corridor, Rest Room	1 42E-03	8 25E-11	0.96%	0 15%
4031 AF 06	Central Alarm Station/Security Room 1	1.93E-03	2.66E-11	0.31%	0 05%
4032 AF 01	Decontamination Room, Non-Radiological and Radiological Controlled Area Entries.	8.53E-04	1.35E-11	0 16%	0 02%
4032 AF 02	Containment Access Corridor Elevation 107' 2"	4 38E-04	6 04E-12	0 07%	0.01%
4033 AF 01	Hot Machine Shop	1 67E-03	2.30E-11	0 27%	0.04%

Table 57-9 (Sheet 4 of 5)

SUMMARY OF RESULTS

Fire Area	Description	Fire Frequency	CDF	Area Risk/Total Risk for the Building	Area Risk/Total Risk for the Reactor
4034 AF 01	General Offices	1.42E-03	1.96E-11	0.23%	0.03%
4041 AF 01	Conference Rooms/Computer Room A/Corridor	4.66E-04	9.80E-13	0.01%	0.00%
4041 AF 02	Corridor/Restroom	4 50E-04	7.15E-12	0.08%	0.01%
4042 AF 01	Non-Class 1E Switchgear #1	8.34E-03	1.32E-10	1.53%	0.24%
4042 AF 02	Non-Class 1E Switchgear #2	2.66E-03	4.22E-11	0.49%	0.08%
4052 AF 01	Staging and Storage Area/ Containment Air Filtration Exhaust Rooms A & B	1.94E-03	4.08E-14	0.00%	0.00%
Total Annex Building		3.19E-02	8.64E-09		15.40%
5031 AF 01	Radwaste Building	2.42E-02	3.08E-14	100.00%	0.00%
6030 AF 01	Diesel Generator Room A	2.99E-02	1.09E-13	40.00%	0.00%
6030 AF 02	Diesel Generator Room B	3.03E-02	1.20E-13	43.85%	0.00%
6030 AF 03	Fuel Oil Day Tank Room A	2.10E-04	2.21E-14	8.08%	0.00%
6030 AF 04	Fuel Oil Day Tank Room B	2.10E-04	2.21E-14	8.08%	0.00%
Total Diesel Generator		6.06E-02	2.73E-13		0.00%
1100 AF 11204	Reactor Coolant Drain Tank Room	3.50E-05	7.36E-14	0.00%	0.00%
1100 AF 11206	Accumulator Room A	1.81E-05	3.80E-14	0.00%	0.00%
1100 AF 11207	Accumulator Room B	1.81E-05	3.80E-14	0.00%	0.00%
1100 AF 11208	RNS Valve Room	1.81E-05	4.62E-14	0.00%	0.00%
1100 AF 11300A	Maintenance Floor (SE Quadrant Access)	1.54E-04	3.25E-10	1.42%	0.58%

Table 57-9 (Sheet 5 of 5)

SUMMARY OF RESULTS

Fire Area	Description	Fire Frequency	CDF	Area Risk/Total Risk for the Building	Area Risk/Total Risk for the Reactor
1100 AF 11300B	Maintenance Floor (NNE Quadrant) and RCDT Access	3 71E-04	1 32E-08	57 66%	23.49%
1100 AF 11301	SG Compartment 1	1 70E-04	1 31E-11	0.06%	0 02%
1100 AF 11302	SG Compartment 2	9 51E-05	1 31E-11	0.06%	0.02%
1100 AF 11303	Pressurizer Compartment	1 81E-05	3.81E-14	0 00%	0.00%
1100 AF 11303A	ADS Lower Valve Area	1 81E-05	7 93E-12	0 03%	0.01%
1100 AF 11303B	ADS Upper Valve Area	1 81E-05	7 93E-12	0 03%	0 01%
1100 AF 11500	Operating Deck	4 92E-04	9 24E-09	40.40%	16 46%
1200 AF 12341	Middle Annulus	2.29E-05	7.55E-11	0 33%	0 13%
1200 AF12555	Main Control Room Emergency Habitability System Air Storage/Operating Deck Staging Area	1.50E-03	3 82E-14	0 00%	0 00%
Total Containment		2.95E-03	2 29E-08		40.74%
Total MCR	Main Control Room	9 5E-03	3.18E-12		0 00%
Plant Total		2.9E-01	5.61E-08		100 00%

Table 57-10

DISTRIBUTION OF FIRE CDF FREQUENCY BY THREE MAJOR PLANT AREAS

Plant Area	Fire Frequency	CDF	% Contribution to Fire CDF
Plant (excluding Cont & MCR)	2.80E-01	3.33E-08	59.26%
Main Control Room	9.5E-03	3.18E-12	0.00%
Inside Containment	2.95E-03	2.29E-08	40.74%
Total	2.9E-01	5.61E-08	100.00%

Table 57-11

DISTRIBUTION OF FIRE CDF FREQUENCY BY EIGHT PLANT AREAS

Plant Area	Fire Frequency	CDF	% Contribution to Fire CDF
Yard Building (Including Transformer Yard)	2 00E-02	2.04E-09	3 63%
Total Auxiliary Building	6 31E-02	1 66E-08	29.53%
Total Turbine Building	8.07E-02	6 00E-09	10.69%
Total Annex Building	3.19E-02	8 64E-09	15.40%
Radwaste Building	2.42E-02	3 08E-14	0 00%
Total Diesel Generator	6.06E-02	2 73E-13	0.00%
Total Containment	2.95E-03	2 29E-08	40 74%
Total MCR	9 5E-03	3 18E-12	0.00%
Total	2 9E-01	5 61E-08	100.00%

Table 57-12 (Sheet 1 of 5)

FIRE AREAS SORTED BY CDF

Fire Area	Description	Fire Frequency (Fiev)	Conditional CDF = CDF/ Fire Freq. (CDF/Fiev)	CDF (CDF)	% Contribution to Fire CDF
1100 AF 11300B	Maintenance Floor (NNE Quadrant) and RCDT Access	3.71E-04	3.55E-05	1.32E-08	23.49%
1100 AF 11500	Operating Deck	4.92E-04	1.88E-05	9.24E-09	16.46%
1200 AF 03	Corridors 100' & 117' 6"	1.63E-03	4.08E-06	6.65E-09	11.85%
2000 AF 01	Turbine Building Floor	6.47E-02	7.87E-08	5.10E-09	9.08%
4031 AF 02	Battery Room and Battery Charger Room 2/Computer Room B/ Shift Turnover Room	3.14E-03	1.38E-06	4.33E-09	7.72%
4031 AF 01	Battery Room and Battery Charger Room 1	2.87E-03	1.38E-06	3.96E-09	7.06%
1230 AF 02	Non-Class 1E Electrical Compartment - 100'	1.56E-03	1.43E-06	2.24E-09	3.99%
1201 AF 02	Division B Batteries/DC Equipment Room/Instrumentation and Control	3.73E-03	5.53E-07	2.06E-09	3.67%
0000 AF 00	Yard Building (Including Transformer Yard)	2.00E-02	1.02E-07	2.04E-09	3.63%
1202 AF 03	Division C Batteries/DC Equipment/I&C Room/RCP Trip Switchgear Room/I&C Penetration Room	4.45E-03	3.97E-07	1.77E-09	3.15%
1201 AF 03	Division D DC Equipment/I&C	3.04E-03	4.22E-07	1.28E-09	2.29%
1202 AF 04	Division A Electrical Equipment/Battery Room/I&C Room	3.00E-03	2.13E-07	6.39E-10	1.14%
1220 AF 01	Division B RCP Trip Switchgear/Spare Room/Corridor 82' - 6"	4.43E-03	1.35E-07	5.98E-10	1.07%
2053 AF 01	Electrical Equipment Room	6.70E-03	7.73E-08	5.18E-10	0.92%

Table 57-12 (Sheet 2 of 5)

FIRE AREAS SORTED BY CDF

Fire Area	Description	Fire Frequency (Fiev)	Conditional CDF = CDF/ Fire Freq. (CDF/Fiev)	CDF (CDF)	% Contribution to Fire CDF
1100 AF 11300A	Maintenance Floor (SE Quadrant Access)	1 54E-04	2 11E-06	3 25E-10	0.58%
1240 AF 01	Non-Class 1E Electrical Compartment - 117'	1 55E-03	1.80E-07	2.79E-10	0 50%
1200 AF 01	RCA of Auxiliary Building (All Zones)	1 81E-02	1 30E-08	2 35E-10	0.42%
2052 AF 01	Southwest 6 9KV Switchgear Room	2 48E-03	7 73E-08	1 92E-10	0 34%
2053 AF 02	Northwest 6 9KV Switchgear Room	2.48E-03	7 73E-08	1 92E-10	0.34%
1210 AF 01	Corridor/Spare Battery Room/Spare Room /Spare Battery Charger Room	1 47E-03	1 19E-07	1 75E-10	0.31%
1242 AF 02	Division A Penetration Area	3.33E-04	4.84E-07	1 61E-10	0 29%
4042 AF 01	Non-Class 1E Switchgear #1	8 34E-03	1.59E-08	1 32E-10	0 24%
1243 AF 02	Reactor Trip Switchgear II	2.84E-03	4 29E-08	1 22E-10	0.22%
1201 AF 05	MSIV Compartment A	6.60E-04	1 68E-07	1 11E-10	0 20%
4031 AF 05	Access Area, Access Corridor, Security Room 2, Corridor, Rest Room	1 42E-03	5 81E-08	8.25E-11	0 15%
1200 AF 12341	Middle Annulus	2 29E-05	3 30E-06	7 55E-11	0.13%
1243 AF 01	Reactor Trip Switchgear I	2 84E-03	2 47E-08	7.01E-11	0 12%
1202 AF 02	Northeast Elevator Shaft	1 17E-03	5 81E-08	6 80E-11	0.12%
1201 AF 06	MSIV Compartment B	3 31E-04	1 68E-07	5 58E-11	0.10%

Table 57-12 (Sheet 3 of 5)

FIRE AREAS SORTED BY CDF

Fire Area	Description	Fire Frequency (Fiev)	Conditional CDF = CDF/ Fire Freq. (CDF/Fiev)	CDF (CDF)	% Contribution to Fire CDF
4042 AF 02	Non-Class 1E Switchgear #2	2.66E-03	1.59E-08	4.22E-11	0.08%
1201 AF 04	Division B/D VBS Equipment	3 60E-04	8.48E-08	3.05E-11	0.05%
4031 AF 06	Central Alarm Station/Security Room 1	1.93E-03	1.38E-08	2.66E-11	0.05%
4033 AF 01	Hot Machine Shop	1.67E-03	1.38E-08	2.30E-11	0 04%
4034 AF 01	General Offices	1.42E-03	1.38E-08	1.96E-11	0.03%
1232 AF 01	Remote Shutdown Workstation	1.32E-04	1.19E-07	1.57E-11	0.03%
4032 AF 01	Decontamination Room, Non-Radiological and Radiological Controlled Area Entries...	8.53E-04	1.59E-08	1.35E-11	0.02%
1100 AF 11301	SG Compartment 1	1.70E-04	7.73E-08	1.31E-11	0.02%
1100 AF 11302	SG Compartment 2	9.51E-05	1.38E-07	1.31E-11	0.02%
1204 AF 01	RNS Pump Room B	4.97E-03	2.55E-09	1.27E-11	0 02%
Total MCR	Main Control Room	9.5E-03	3.35E-10	3.18E-12	0.00%
1100 AF 11303A	ADS Lower Valve Area	1.81E-05	4.38E-07	7.93E-12	0.01%
1100 AF 11303B	ADS Upper Valve Area	1.81E-05	4.38E-07	7.93E-12	0.01%
4041 AF 02	Corridor/Restroom	4.50E-04	1.59E-08	7.15E-12	0.01%
2003 AF 01	Auxiliary Boiler Equipment Room	1.23E-03	2.04E-09	2.51E-12	0.00%

Table 57-12 (Sheet 4 of 5)

FIRE AREAS SORTED BY CDF

Fire Area	Description	Fire Frequency (Fiev)	Conditional CDF = CDF/ Fire Freq. (CDF/Fiev)	CDF (CDF)	% Contribution to Fire CDF
1250 AF 01	Nonradioactive Ventilation System	2 68E-03	7.73E-10	2.07E-12	0 00%
2009 AF 02	Elevator Machine Room	1 17E-03	1.02E-09	1.19E-12	0 00%
4041 AF 01	Conference Rooms/Computer Room A/Corridor	4.66E-04	2.10E-09	9 80E-13	0 00%
1230 AF 01	Corridor Division A, B, C, D and Remote Shutdown Workstation	1 71E-04	3 58E-09	6.12E-13	0 00%
1220 AF02	Lower Annulus Valve Area	1.71E-04	2 10E-09	3 59E-13	0 00%
4032 AF 02	Containment Access Corridor Elevation 107'-2"	4 38E-04	2 76E-10	1 21E-13	0.00%
6030 AF 02	Diesel Generator Room B	3.03E-02	3.95E-12	1 20E-13	0 00%
6030 AF 01	Diesel Generator Room A	2 99E-02	3.65E-12	1.09E-13	0 00%
4003 AF 01	Demineralized Water Deoxygenating Room/Air Handling Equipment Rooms	4 26E-03	2 55E-11	1 09E-13	0 00%
1100 AF 11204	Reactor Coolant Drain Tank Room	3.50E-05	2 10E-09	7 36E-14	0 00%
2050 AF 01	Lube Oil Conditioner Room	2 83E-04	1 93E-10	5 47E-14	0.00%
1100 AF 11208	RNS Valve Room	1 81E-05	2 55E-09	4 62E-14	0.00%
4052 AF 01	Staging and Storage Area/Containment Air Filtration Exhaust Rooms A & B	1 94E-03	2.10E-11	4.08E-14	0 00%
2033 AF 02	Motor-Driven Fire Pump Room	1.01E-03	3 87E-11	3 90E-14	0.00%

Table 57-12 (Sheet 5 of 5)

FIRE AREAS SORTED BY CDF

Fire Area	Description	Fire Frequency (Fiev)	Conditional CDF = CDF/ Fire Freq. (CDF/Fiev)	CDF (CDF)	% Contribution to Fire CDF
1200 AF12555	Main Control Room Emergency Habitability System Air Storage/Operating Deck Staging Area	1.50E-03	2.55E-11	3.82E-14	0.00%
1100 AF 11303	Pressurizer Compartment	1.81E-05	2.10E-09	3.81E-14	0 00%
1100 AF 11206	Accumulator Room A	1.81E-05	2.10E-09	3.80E-14	0.00%
1100 AF 11207	Accumulator Room B	1.81E-05	2.10E-09	3 80E-14	0.00%
5031 AF 01	Radwaste Building	2.42E-02	1.27E-12	3.08E-14	0.00%
1204 AF 03	South Shield Building Elevator Shaft	1.17E-03	2.55E-11	2.98E-14	0 00%
1205 AF 02	Southeast Elevator Shaft	1.17E-03	2.55E-11	2.98E-14	0.00%
1200 AF 02	New Fuel and Used Fuel Storage, Waste Disposal Container (All Zones)	1.10E-03	2.13E-11	2.34E-14	0.00%
6030 AF 03	Fuel Oil Day Tank Room A	2.10E-04	1.05E-10	2.21E-14	0.00%
6030 AF 04	Fuel Oil Day Tank Room B	2.10E-04	1.05E-10	2.21E-14	0.00%
2040 AF 01	Clean and Dirty Lube Oil Storage	2.83E-04	7.73E-11	2.19E-14	0.00%
2043 AF 01	Chemical Laboratory	3.23E-04	1.55E-11	4.99E-15	0.00%
Plant Total		2.9E-01		5.61E-08	100.00%

Table 57-13 (Sheet 1 of 5)

FIRE AREAS SORTED BY CDF/FIEV

Fire Area	Description	Fire Frequency (Fiev)	Conditional CDF = CDF/ Fire Freq. (CDF/Fiev)	CDF (CDF)	% Contribution to Fire CDF
1100 AF 11300B	Maintenance Floor (NNE Quadrant) and RCDT Access	3 71E-04	3 55E-05	1 32E-08	23.49%
1100 AF 11500	Operating Deck	4.92E-04	1 88E-05	9 24E-09	16.46%
1200 AF 03	Corridors 100' & 117' 6"	1 63E-03	4 08E-06	6.65E-09	11 85%
1200 AF 12341	Middle Annulus	2 29E-05	3.30E-06	7 55E-11	0 13%
1100 AF 11300A	Maintenance Floor (SE Quadrant Access)	1.54E-04	2 11E-06	3 25E-10	0.58%
1230 AF 02	Non-Class 1E Electrical Compartment - 100'	1 56E-03	1 43E-06	2 24E-09	3.99%
4031 AF 02	Battery Room and Battery Charger Room 2/Computer Room B/ Shift Turnover Room	3 14E-03	1.38E-06	4 33E-09	7 72%
4031 AF 01	Battery Room and Battery Charger Room 1	2 87E-03	1.38E-06	3 96E-09	7 06%
1201 AF 02	Division B Batteries/DC Equipment Room/Instrumentation and Control	3.73E-03	5.53E-07	2 06E-09	3 67%
1242 AF 02	Division A Penetration Area	3.33E-04	4.84E-07	1 61E-10	0.29%
1100 AF 11303A	ADS Lower Valve Area	1 81E-05	4 38E-07	7.93E-12	0 01%
1100 AF 11303B	ADS Upper Valve Area	1 81E-05	4 38E-07	7.93E-12	0 01%
1201 AF 03	Division D DC Equipment/I&C	3.04E-03	4 22E-07	1 28E-09	2.29%
1202 AF 03	Division C Batteries/DC Equipment/I&C Room/RCP Trip Switchgear Room/I&C Penetration Room	4.45E-03	3.97E-07	1 77E-09	3 15%

Table 57-13 (Sheet 2 of 5)

FIRE AREAS SORTED BY CDF/FIEV

Fire Area	Description	Fire Frequency (Fiev)	Conditional CDF = CDF/ Fire Freq. (CDF/Fiev)	CDF (CDF)	% Contribution to Fire CDF
1202 AF 04	Division A Electrical Equipment/Battery Room/I&C Room	3.00E-03	2.13E-07	6.39E-10	1.14%
1240 AF 01	Non-Class 1E Electrical Compartment - 117'	1.55E-03	1.80E-07	2.79E-10	0.50%
1201 AF 05	MSIV Compartment A	6.60E-04	1.68E-07	1.11E-10	0.20%
1201 AF 06	MSIV Compartment B	3.31E-04	1.68E-07	5.58E-11	0.10%
1100 AF 11302	SG Compartment 2	9.51E-05	1.38E-07	1.31E-11	0.02%
1220 AF 01	Division B RCP Trip Switchgear/Spare Room/Corridor 82' - 6"	4.43E-03	1.35E-07	5.98E-10	1.07%
1232 AF 01	Remote Shutdown Workstation	1.32E-04	1.19E-07	1.57E-11	0.03%
1210 AF 01	Corridor/Spare battery Room/Spare Room /Spare Battery Charger Room	1.47E-03	1.19E-07	1.75E-10	0.31%
0000 AF 00	Yard Building (Including Transformer Yard)	2.00E-02	1.02E-07	2.04E-09	3.63%
1201 AF 04	Division B/D VBS Equipment	3.60E-04	8.48E-08	3.05E-11	0.05%
2000 AF 01	Turbine Building Floor	6.47E-02	7.87E-08	5.10E-09	9.08%
2053 AF 01	Electrical Equipment Room	6.70E-03	7.73E-08	5.18E-10	0.92%
2052 AF 01	Southwest 6.9KV Switchgear Room	2.48E-03	7.73E-08	1.92E-10	0.34%
2053 AF 02	Northwest 6.9KV Switchgear Room	2.48E-03	7.73E-08	1.92E-10	0.34%
1100 AF 11301	SG Compartment 1	1.70E-04	7.73E-08	1.31E-11	0.02%
4031 AF 05	Access Area, Access Corridor, Security Room 2, Corridor, Rest Room	1.42E-03	5.81E-08	8.25E-11	0.15%

Table 57-13 (Sheet 3 of 5)

FIRE AREAS SORTED BY CDF/FIEV

Fire Area	Description	Fire Frequency (Fiev)	Conditional CDF = CDF/ Fire Freq. (CDF/Fiev)	CDF (CDF)	% Contribution to Fire CDF
1202 AF 02	Northeast Elevator Shaft	1 17E-03	5 81E-08	6 80E-11	0.12%
1243 AF 02	Reactor Trip Switchgear II	2 84E-03	4 29E-08	1 22E-10	0 22%
1243 AF 01	Reactor Trip Switchgear I	2 84E-03	2.47E-08	7.01E-11	0.12%
4041 AF 02	Corridor/Restroom	4 50E-04	1 59E-08	7 15E-12	0 01%
4042 AF 01	Non-Class 1E Switchgear #1	8.34E-03	1.59E-08	1.32E-10	0 24%
4042 AF 02	Non-Class 1E Switchgear #2	2 66E-03	1 59E-08	4 22E-11	0 08%
4032 AF 01	Decontamination Room, Non-Radiological and Radiological Controlled Area Entries	8.53E-04	1.59E-08	1 35E-11	0 02%
4031 AF 06	Central Alarm Station/Security Room 1	1 93E-03	1 38E-08	2 66E-11	0 05%
4033 AF 01	Hot Machine Shop	1 67E-03	1 38E-08	2.30E-11	0 04%
4034 AF 01	General Offices	1 42E-03	1 38E-08	1 96E-11	0 03%
1200 AF 01	RCA of Auxiliary Building (All Zones)	1 81E-02	1 30E-08	2 35E-10	0 42%
1230 AF 01	Corridor Division A, B, C, D and Remote Shutdown Workstation	1 71E-04	3 58E-09	6 12E-13	0.00%
1100 AF 11208	RNS Valve Room	1.81E-05	2.55E-09	4 62E-14	0 00%
1204 AF 01	RNS Pump Room B	4.97E-03	2.55E-09	1 27E-11	0 02%
4041 AF 01	Conference Rooms/Computer Room A/Corridor	4 66E-04	2 10E-09	9.80E-13	0 00%

Table 57-13 (Sheet 4 of 5)

FIRE AREAS SORTED BY CDF/FIEV

Fire Area	Description	Fire Frequency (Fiev)	Conditional CDF = CDF/ Fire Freq. (CDF/Fiev)	CDF (CDF)	% Contribution to Fire CDF
1100 AF 11204	Reactor Coolant Drain Tank Room	3.50E-05	2.10E-09	7.36E-14	0.00%
1100 AF 11303	Pressurizer Compartment	1.81E-05	2.10E-09	3.81E-14	0.00%
1220 AF02	Lower Annulus Valve Area	1.71E-04	2.10E-09	3.59E-13	0 00%
1100 AF 11206	Accumulator Room A	1.81E-05	2.10E-09	3.80E-14	0.00%
1100 AF 11207	Accumulator Room B	1.81E-05	2.10E-09	3.80E-14	0.00%
2003 AF 01	Auxiliary Boiler Equipment Room	1.23E-03	2.04E-09	2.51E-12	0.00%
2009 AF 02	Elevator Machine Room	1.17E-03	1.02E-09	1.19E-12	0 00%
1250 AF 01	Nonradioactive Ventilation System	2.68E-03	7.73E-10	2.07E-12	0 00%
Total MCR	Main Control Room	9 5E-03	3.35E-10	3.18E-12	0.00%
4032 AF 02	Containment Access Corridor Elevation 107'-2"	4.38E-04	2.76E-10	1.21E-13	0.00%
2050 AF 01	Lube Oil Conditioner Room	2.83E-04	1.93E-10	5.47E-14	0.00%
6030 AF 03	Fuel Oil Day Tank Room A	2.10E-04	1.05E-10	2.21E-14	0.00%
6030 AF 04	Fuel Oil Day Tank Room B	2.10E-04	1.05E-10	2.21E-14	0.00%
2040 AF 01	Clean and Dirty Lube Oil Storage	2.83E-04	7.73E-11	2.19E-14	0.00%
2033 AF 02	Motor-Driven Fire Pump Room	1.01E-03	3.87E-11	3.90E-14	0.00%

Table 57-13 (Sheet 5 of 5)

FIRE AREAS SORTED BY CDF/FIEV

Fire Area	Description	Fire Frequency (Fiev)	Conditional CDF = CDF/ Fire Freq. (CDF/Fiev)	CDF (CDF)	% Contribution to Fire CDF
4003 AF 01	Demineralized Water Deoxygenating Room/Air Handling Equipment Rooms	4 26E-03	2.55E-11	1.09E-13	0 00%
1200 AF12555	Main Control Room Emergency Habitability System Air Storage/Operating Deck Staging Area	1.50E-03	2.55E-11	3 82E-14	0 00%
1204 AF 03	South Shield Building Elevator Shaft	1 17E-03	2 55E-11	2.98E-14	0 00%
1205 AF 02	Southeast Elevator Shaft	1 17E-03	2 55E-11	2 98E-14	0.00%
1200 AF 02	New Fuel and Used Fuel Storage, Waste Disposal Container (All Zones)	1 10E-03	2 13E-11	2 34E-14	0.00%
4052 AF 01	Staging and Storage Area/Containment Air Filtration Exhaust Rooms A & B	1 94E-03	2 10E-11	4.08E-14	0 00%
2043 AF 01	Chemical Laboratory	3 23E-04	1 55E-11	4 99E-15	0.00%
6030 AF 02	Diesel Generator Room B	3.03E-02	3.95E-12	1 20E-13	0 00%
6030 AF 01	Diesel Generator Room A	2 99E-02	3 65E-12	1.09E-13	0 00%
5031 AF 01	Radwaste Building	2.42E-02	1.27E-12	3 08E-14	0 00%
Plant Total		2 9E-01	1.98E-07	5.61E-08	100 00%

Table 57-14

CREDIT FOR MANUAL FIRE SUPPRESSION

Base CDF	Plant Area	Fire Frequency	CDF	% Contribution to Fire CDF
2 04E-09	Yard Building (Including Transformer Yard)	2.00E-02	2.04E-10	0.45%
1.66E-08	Total Auxiliary Building	6.31E-02	8.23E-09	18.02%
6.00E-09	Total Turbine Building	8.07E-02	6.00E-09	13.14%
8.64E-09	Total Annex Building	3.19E-02	8.35E-09	18.30%
3.08E-14	Radwaste Building	2.42E-02	3.08E-14	0.00%
2.73E-13	Total Diesel Generator	6.06E-02	2.73E-13	0.00%
2.29E-08	Total Containment	2.95E-03	2.29E-08	50.09%
3.18E-12	Total MCR	9.5E-03	3.18E-12	0.00%
5.61E-08	Total	2.9E-01	4.56E-08	100.00%

Table 57-15

REDUCTION OF HOT SHORT PROBABILITY

Base CDF	Plant Area	Fire Frequency	CDF	% Contribution to Fire CDF
2 04E-09	Yard Building (Including Transformer Yard)	2.00E-02	2 04E-09	7 80%
1 66E-08	Total Auxiliary Building	6.31E-02	7 93E-09	30 35%
6 00E-09	Total Turbine Building	8 07E-02	6 00E-09	22.95%
8 64E-09	Total Annex Building	3 19E-02	8 56E-09	32.75%
3 08E-14	Radwaste Building	2 42E-02	3 08E-14	0 00%
2 73E-13	Total Diesel Generator	6 06E-02	2.73E-13	0 00%
2 29E-08	Total Containment	2 95E-03	1.61E-09	6 15%
3 18E-12	Total MCR	9.5E-03	3.18E-12	0 00%
5.61E-08	Total	2.9E-01	2.61E-08	100 00%

Table 57-16

INCREASE OF HOT SHORT PROBABILITY

Base CDF	Plant Area	Fire Frequency	CDF	% Contribution to Fire CDF
2.04E-09	Yard Building (Including Transformer Yard)	2.00E-02	2.04E-09	1.30%
1.66E-08	Total Auxiliary Building	6 31E-02	5.25E-08	33.51%
6.00E-09	Total Turbine Building	8.07E-02	6.00E-09	3.83%
8.64E-09	Total Annex Building	3.19E-02	8.89E-09	5.67%
3.08E-14	Radwaste Building	2.42E-02	3.08E-14	0.00%
2.73E-13	Total Diesel Generator	6.06E-02	2.73E-13	0.00%
2.29E-08	Total Containment	2.95E-03	8.73E-08	55.69%
3.18E-12	Total MCR	9.5E-03	3.18E-12	0.00%
5.61E-08	Total	2.9E-01	1.57E-07	100.00%

Table 57-17

SENSITIVITY TO HUMAN ACTIONS

Base CDF	Plant Area	Fire Frequency	CDF	% Contribution to Fire CDF
2.04E-09	Yard Building (Including Transformer Yard)	2.00E-02	2.04E-09	0.80%
1.66E-08	Total Auxiliary Building	6.31E-02	1.78E-07	70.21%
6.00E-09	Total Turbine Building	8.07E-02	6.00E-09	2.36%
8.64E-09	Total Annex Building	3.19E-02	8.64E-09	3.40%
3.08E-14	Radwaste Building	2.42E-02	3.08E-14	0.00%
2.73E-13	Total Diesel Generator	6.06E-02	2.73E-13	0.00%
2.29E-08	Total Containment	2.95E-03	5.90E-08	23.23%
3.18E-12	Total MCR	9.5E-03	3.18E-12	0.00%
5.61E-08	Total	2.9E-01	2.54E-07	100.00%

Table 57-18

SENSITIVITY TO FIRE IGNITION FREQUENCIES

Base CDF	Plant Area	Fire Frequency	CDF	% Contribution to Fire CDF
2.04E-09	Yard Building (Including Transformer Yard)	4.00E-02	4.08E-09	1.37%
1.66E-08	Total Auxiliary Building	1.43E-01	3.62E-08	12.12%
6.00E-09	Total Turbine Building	1.68E-01	1.20E-08	4.02%
8.64E-09	Total Annex Building	8.14E-02	1.75E-08	5.85%
3.08E-14	Radwaste Building	4.84E-02	6.17E-14	0.00%
2.73E-13	Total Diesel Generator	1.25E-01	6.70E-13	0.00%
2.29E-08	Total Containment	1.75E-02	2.29E-07	76.64%
3.18E-12	Total MCR	1.9E-02	6.36E-12	0.00%
5.61E-08	Total	6.4E-01	2.98E-07	100.00%

Table 57-19

SENSITIVITY TO ACTUATION BY DAS

Base CDF	Plant Area	Fire Frequency	CDF	% Contribution to Fire CDF
2.04E-09	Yard Building (Including Transformer Yard)	2.00E-02	2.04E-09	0.93%
1.66E-08	Total Auxiliary Building	6.31E-02	1.75E-08	8.00%
6.00E-09	Total Turbine Building	8.07E-02	6.00E-09	2.74%
8.64E-09	Total Annex Building	3.19E-02	8.64E-09	3.95%
3.08E-14	Radwaste Building	2.42E-02	3.08E-14	0.00%
2.73E-13	Total Diesel Generator	6.06E-02	2.73E-13	0.00%
2.29E-08	Total Containment	2.95E-03	1.85E-07	84.38%
3.18E-12	Total MCR	9.5E-03	3.18E-12	0.00%
5.61E-08	Total	2.9E-01	2.19E-07	100.00%

Table 57-20

PLANT FIRE CDF WITHOUT HOT SHORTS

Fire Area	Description	Fire Frequency	CDF	% Contribution to Plant CDF
2000 AF 01	Turbine Building Floor	6.47E-02	5.10E-09	19.70%
1200 AF 03	Corridors 100'&117'6"	1.63E-03	4.40E-09	17.02%
4031 AF 02	Battery Room and Battery Charger Room 2/Computer Room B/ Shift Turnover Room	3.14E-03	4.33E-09	16.75%
4031 AF 01	Battery Room and Battery Charger Room 1	2.87E-03	3.96E-09	15.31%
1230 AF 02	Non-Class 1E Electrical Compartment - 100'	1.56E-03	2.15E-09	8.32%
0000 AF 00	Yard Building (Including Transformer Yard)	2.00E-02	2.04E-09	7.89%
1100 AF 11300B	Maintenance Floor (NNE Quadrant) and RCDT Access	3.71E-04	9.14E-10	3.53%
2053 AF 01	Electrical Equipment Room	6.70E-03	5.18E-10	2.00%
1100 AF 11500	Operating Deck	4.92E-04	3.98E-10	1.54%
1201 AF 02	Division B Batteries/DC Equipment Room/Instrumentation and Control	3.73E-03	3.68E-10	1.42%
1201 AF 03	Division D DC Equipment/I&C	3.04E-03	3.07E-10	1.19%
2052 AF 01	Southwest 6.9KV Switchgear Room	2.48E-03	1.92E-10	0.74%
2053 AF 02	Northwest 6.9KV Switchgear Room	2.48E-03	1.92E-10	0.74%
1200 AF 01	RCA of Auxiliary Building (All Zones)	1.81E-02	1.61E-10	0.62%
4042 AF 01	Non-Class 1E Switchgear #1	8.34E-03	1.32E-10	0.51%
1202 AF 03	Division C Batteries/DC Equipment/I&C Room/RCP Trip Switchgear Room/I&C Penetration Room	4.45E-03	1.28E-10	0.50%
Sum		1.44E-01	2.53E-08	97.80%
Plant Total		2.9E-01	2.59E-08	100.00%

Table 57-21

CONTRIBUTION OF THE PLANT AREAS TO CDF

Plant Area	Fire Area Frequency	Fire Area CDF	Fire Area % Contribution to Fire CDF
Yard	2.00E-02	2.04E-09	3.6%
Auxiliary Building	6.31E-02	1.66E-08	29.5%
Turbine Building	8.07E-02	6.00E-09	10.7%
Annex Building	3.19E-02	8.65E-09	15.4%
Radwaste Building	2.42E-02	3.08E-14	0.0%
Diesel Generator Rooms	6.06E-02	2.73E-13	0.0%
Containment	2.95E-03	2.29E-08	40.7%
Main Control Room	9.3E-03	3.18E-12	0.0%
Total	2.9E-01	5.61E-08	100.00%

Table 57-22 (Sheet 1 of 4)

DOMINANT FIRE SCENARIOS

Fire Occurs in Area	Fire Ignition Frequency	Scenario Development	CDF	Initiating Event Causing Reactor Trip	Failed Components
1100 AF 11500	4.92E-04	Fire starts elsewhere than transformers; no propagation; spurious opening of ADS stage 1, 2, or 3 valves	8.84E-09	IEV-MLOCA	Loss of Division B & D (ADS valves unavailable), Spurious Opening of at Least One ADS Stage 1, 2, and/or 3, and Loss of MFW & SFW Systems
1100 AF 11300B	3.71E-04	Fire suppression is successful; spurious actuation of ADS stage 1, 2, or 3 valves.	8.40E-09	IEV-MLOCA	Loss of Division A & C 1CMT, One PRHR Isolation Valve, One CCS Path, Spurious Opening of One ADS Stage 1, 2 or 3 Valve
1200 AF 03	1.63E-03	Fire suppression fails; fire does not propagate; no spurious ADS actuation;	4.35E-09	IEV-TRANS	Some Division B&D I&C cables (But ADS actuation is available), loss of DAS, loss of B and D signals to the reactor trip switchgear
4031 AF 02	3.14E-03	Fire suppression fails; fire does not propagate;	4.29E-09	IEV-TRANS	Loss of 1 Group of Non-1E AC/DC Power, DAS (Induced By the Loss of One Non-1E Division
4031 AF 01	2.87E-03	Fire suppression fails; fire does not propagate;	3.92E-09	IEV-TRANS	Loss of 1 Group of Non-1E AC/DC Power, DAS (Induced By the Loss of One Non-1E Division
1100 AF 11300B	3.71E-04	Fire suppression fails; propagation from I&C A&C to non-1E; no propagation to adjacent fire zones; spurious actuation of ADS stages 1, 2, or 3 valves;	3.14E-09	IEV-MLOCA	Loss of Division A & C, Non-1E Cables, DAS Cables, 1CMT, one PRHR Isolation Valve, and One CCS Path, Spurious Opening of One ADS Stage 1, 2 or 3 Valve

Table 57-22 (Sheet 2 of 4)

DOMINANT FIRE SCENARIOS

Fire Occurs in Area	Fire Ignition Frequency	Scenario Development	CDF	Initiating Event Causing Reactor Trip	Failed Components
2000 AF 01	6.47E-02	Fire suppression is successful; only one train of non-safety related systems are damaged;	2.38E-09	IEV-LMFW	Loss of 1 Train of MFW, SFW, CCW, SWS, and CAS
2000 AF 01	6.47E-02	Fire suppression is successful; both trains of non-safety related systems are damaged;	2.38E-09	IEV-LMFW	Loss of MFW, SFW, CCW, SWS, and CAS
1200 AF 03	1.63E-03	Fire suppression fails; fire does not propagate; spurious ADS actuation occurs;	2.23E-09	IEV-SPADS	Some Division B&D I&C cables (But ADS actuation is available), loss of DAS, loss of B and D signals to the reactor trip switchgear, opening of 1 ADS Stage 4 (due to DAS damage)
1230 AF 02	1.56E-03	Fire suppression successful;	2.05E-09	IEV-TRANS	Loss of Non-1E Division, DAS, Division B & D to the Reactor Trip Switchgear
0000 AF 00	2.00E-02	Suppression fails; no propagation;	2.04E-09	IEV-LOSP	No AC Recovery Following LOSP
1202 AF 03	4.45E-03	Suppression fails; fire does not propagate; operators fail to deactivate division; spurious actuation of ADS occurs; spurious actuation in the second division room occurs;	1.20E-09	IEV-SPADS	Loss of Div. C Spurious Opening of 1 ADS Stages 4 Valve V004C (LLOCA or SPADS)

Table 57-22 (Sheet 3 of 4)

DOMINANT FIRE SCENARIOS

Fire Occurs in Area	Fire Ignition Frequency	Scenario Development	CDF	Initiating Event Causing Reactor Trip	Failed Components
1201 AF 02	3.73E-03	Suppression fails; fire does not propagate; operators fail to deactivate division; spurious actuation of ADS occurs; spurious actuation in the second division room occurs;	9.97E-10	IEV-SPADS	Loss of Div. B Spurious Opening of 1 ADS Stages 4 V004B (LLOCA or SPADS)
1100 AF 11300B	3.71E-04	Fire suppression is successful; no spurious actuation.	8.31E-10	IEV-TRANS	Loss of Division A & C 1CMT, One PRHR Isolation Valve, and One CCS Path
1100 AF 11300B	3.71E-04	Fire Suppression fails; no propagation; spurious actuation of ADS 1, 2, or 3 valves	7.24E-10	IEV-MLOCA	Loss of Division A & C 1CMT, One PRHR Isolation Valve, One CCS Path, Spurious Opening of One ADS Stage 1, 2 or 3 Valve
1201 AF 02	3.73E-03	Suppression fails; fire does not propagate; operators fail to deactivate division; spurious actuation of ADS occurs; no spurious actuation in the second division room;	6.44E-10	IEV-MLOCA	Loss of Div. B Spurious Opening of 1 ADS Stages 1 and/or 2 and/or 3 (MLOCA)
1220 AF 01	4.43E-03	Suppression fails; fire propagates to area 1202 AF 03; ADS 4th stage spurious actuation occurs;	5.98E-10	IEV-SPADS	Loss of Division C Power and Control, Division B & C Input to RCP Trip Switchgear and Divisions B and D Reactor Trip Signals, CVS, and Spurious Opening of ADS Stage 4 Valve V004A or V004C (LLOCA or SPADS)

Table 57-22 (Sheet 4 of 4)

DOMINANT FIRE SCENARIOS

Fire Occurs in Area	Fire Ignition Frequency	Scenario Development	CDF	Initiating Event Causing Reactor Trip	Failed Components
1201 AF 03	3.04E-03	Suppression fails; fire does not propagate; operators fail to deactivate division; no spurious actuation of ADS occurs; spurious actuation in the second division room occurs;	5.19E-10	IEV-MLOCA	Loss of Div. D Spurious Opening of 1 ADS Stages 1 and/or 2 and/or 3 (MLOCA)
1202 AF 04	3.00E-03	Suppression fails; fire does not propagate; operators fail to deactivate division; spurious actuation of ADS occurs; no spurious actuation in the second division room;	5.18E-10	IEV-MLOCA	Loss of Div. C Spurious Opening of 1 ADS Stages 1 and/or 2 and/or 3 Valve (MLOCA)
2053 AF 01	6.70E-03	Suppression fails; no fire propagation;	5.13E-10	IEV-LMFW	Loss of SFW, CCW, SWS, and CAS
1201 AF 03	3.04E-03	Suppression fails; fire does not propagate; operators fail to deactivate division; spurious actuation of ADS occurs; spurious actuation in the second division room occurs;	4.14E-10	IEV-SPADS	Loss of Div. D Spurious Opening of 1 ADS Stages 4 V004B (Large LOCA or SPADS)
1202 AF 03	4.45E-03	Suppression fails; fire does not propagate; operators fail to deactivate division; spurious actuation of ADS occurs; no spurious actuation in the second division room;	3.80E-10	IEV-MLOCA	Loss of Div. C Spurious Opening of 1 ADS Stages 1 and/or 2 and/or 3 Valve (MLOCA), loss of Division C to reactor trip switchgear
Sum of CDFs			5.14E-08	91.54%	
Plant Fire CDF			5.61E-08		

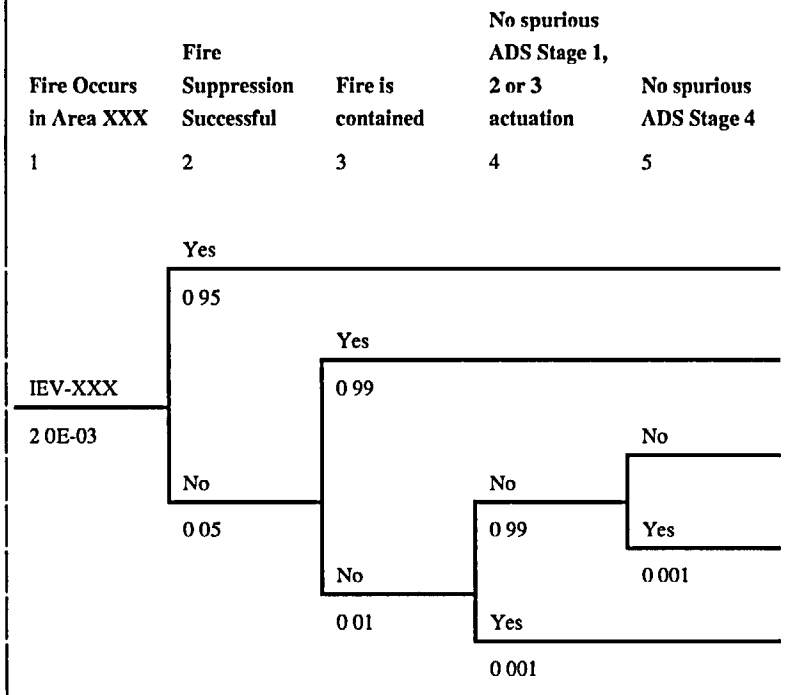

Scenario Number	Scenario IE Frequency	Conditional CDP	Scenario CDF	Initiating Event Type	Failed Components	Area Propagated into
XXX-1					SYS-1	None
XXX-2					SYS-1	None
XXX-3	1 0E-06	1 0E-6	1 0E-12	TRANS	SYS-1, SYS-2	YYY
XXX-4	1.0E-09	0 02	2 0E-11	SPADS	SYS-1, SYS-2	YYY
XXX-5	1 0E-09	0 01	1 0E-11	MLOCA	SYS-1, SYS-2	YYY
Total CDF for XXX =			3 1E-11			

Figure 57-1

Example Event Tree Model

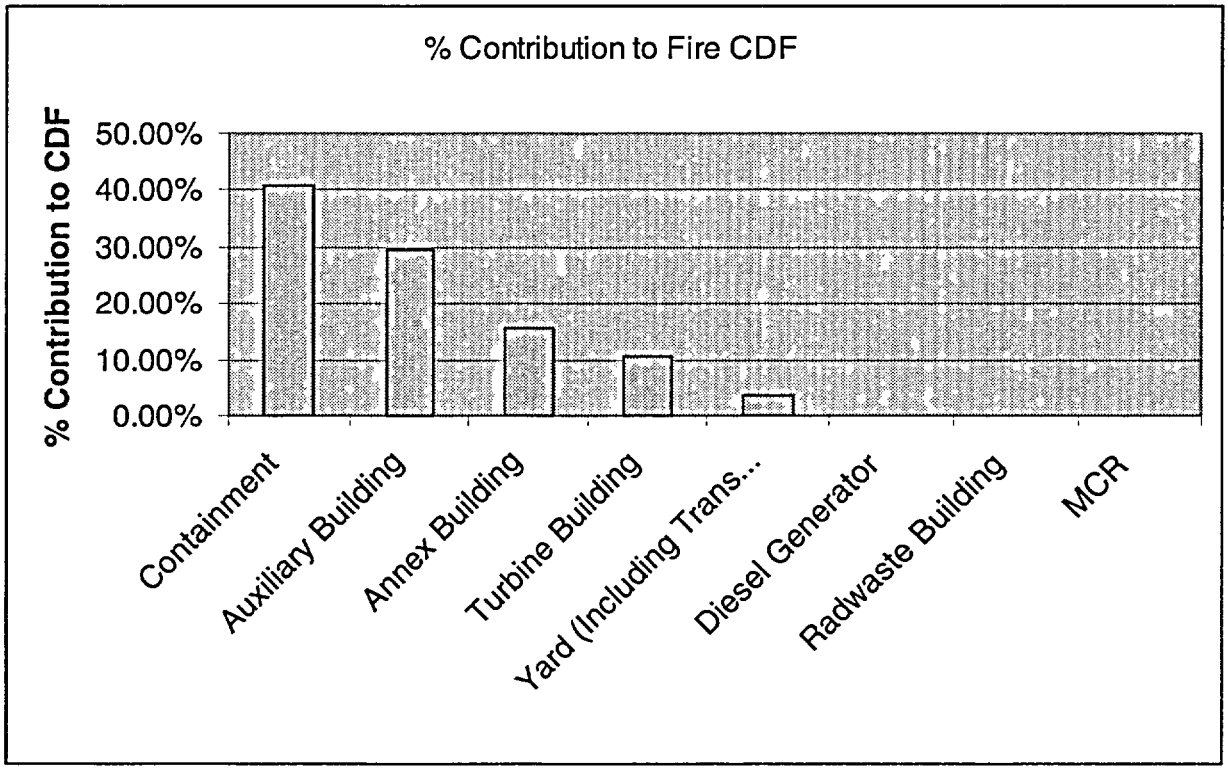

Figure 57-2

Contribution of Plant Areas to Fire CDF

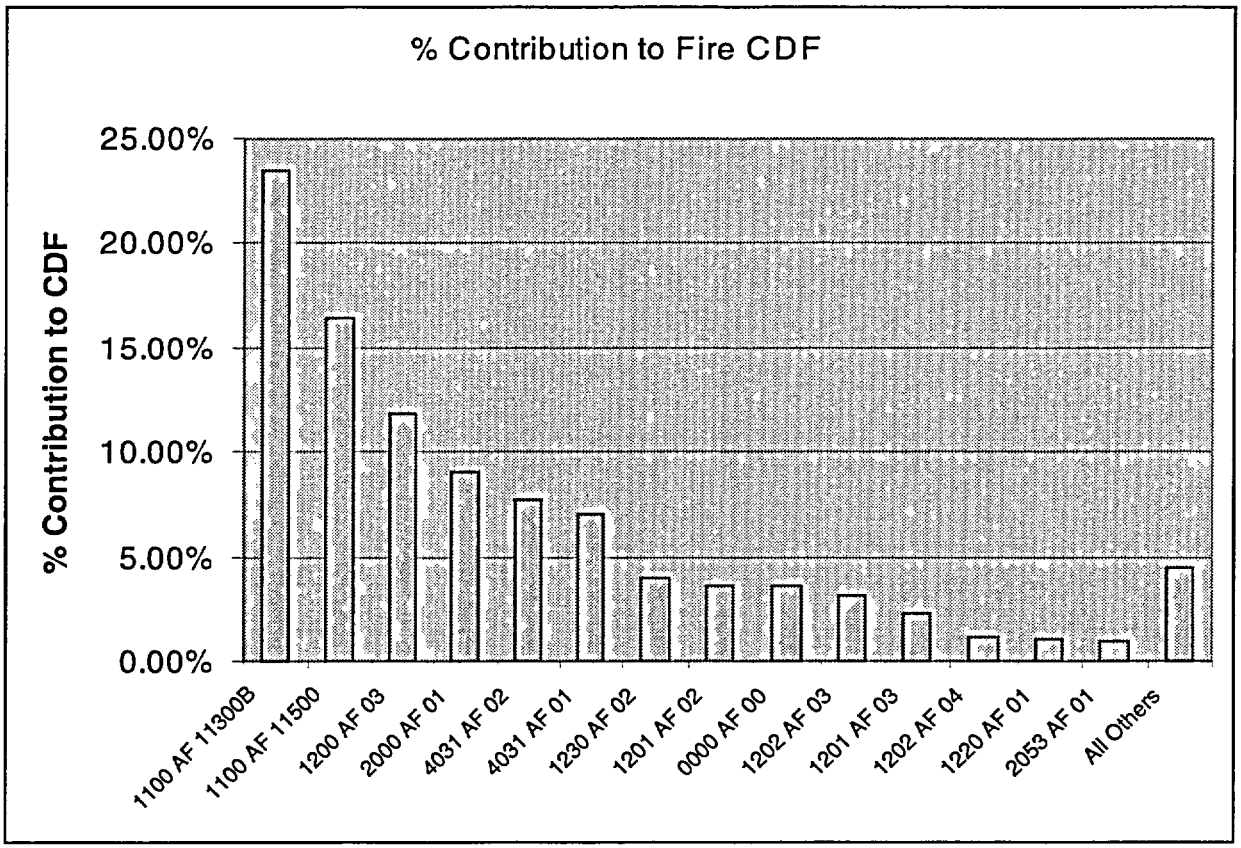

Fire Area	Description	Fire Frequency	CDF
1100 AF 11300B	Maintenance Floor (NNE Quadrant) and RCDT Access	3.71E-04	1.32E-08
1100 AF 11500	Operating Deck	4.92E-04	9.24E-09
1200 AF 03	Corridors 100' & 117' 6"	1.63E-03	6 65E-09
2000 AF 01	Turbine Building Floor	6.47E-02	5.10E-09
4031 AF 02	Battery Room and Battery Charger Room 2/Computer Room, etc.	3.14E-03	4.33E-09
4031 AF 01	Battery Room and Battery Charger Room 1	2.87E-03	3.96E-09
1230 AF 02	Non-Class 1E Electrical Compartment - 100'	1.56E-03	2.24E-09
1201 AF 02	Division B Batteries/DC Equipment Room/ I&C	3.73E-03	2.06E-09
0000 AF 00	Yard Building (Including Transformer Yard)	2.00E-02	2.04E-09
1202 AF 03	Division C Batteries/DC Equipment/I&C Room/RCP Trip Switchgear Room/I&C Penetration Room	4.45E-03	1.77E-09
1201 AF 03	Division D DC Equipment/I&C	3.04E-03	1.28E-09
1202 AF 04	Division A Electrical Equipment/Battery Room/I&C Room	3 00E-03	6 39E-10
1220 AF 01	Division B RCP Trip Switchgear/Spare Room/Corridor 82' 6"	4.43E-03	5.98E-10
2053 AF 01	Electrical Equipment Room	6.70E-03	5.18E-10

Figure 57-3

Contribution of Fire Area to Fire CDF

ATTACHMENT 57A

CALCULATION OF SCENARIO CCDPS

57A.1 Calculation of Scenario CCDPs

AP1000 PRA CDF quantification for Revision 2 (Reference 16) is used as the starting point for CCDP calculations.

CCDPs are calculated as follows:

1. Determine the initiating event caused by a total loss of all components by a fire within a fire area.

2. Use the total core damage output file, CMTOT.OUT, to set all initiating events, except the initiating event defined in Step 1, to zero.

3. Set the initiating event in Step 1 to a value of 1.

4. Save CMTOT.OUT with a different name (such as SCEN1) to a predetermined directory.

5. Using SENS code, retrieve the saved SCEN1 file.

6. Choose and drop all basic events lost in the fire scenario. For example, if the component cooling water system has been lost due to the fire, then all of the component cooling water basic events, as determined by the sensitivity analysis previously performed, are dropped.

7. Re-quantify the SCEN1 file by running SENS. Output file SCEN1.WL1 is created in addition to SEN$$$.WLT and SEN$$$.RPT. SEN$$$.WLT lists all basic events dropped and SEN$$$.RPT lists the value of the CCDP.

8. To determine the significance of the fire scenario CCDP to the corresponding base AP1000 scenario CCDP, the fire CCDP is divided by the AP1000 CCDP to obtain the ratio.

Example

The following example illustrates the process.

The initiating event is loss of main feedwater (LMFW) due to fire, which, for this example, results in a scenario where there is a loss of the startup feedwater system (SFW), component cooling water system (CCW), service water system (SWS), and plant air system (CAS).

To calculate the CCDP for this fire scenario, the following steps are performed:

1. Open the CMTOT.OUT file. Set LMFW to 1 and all other initiating events to 0.

2. Save the file as SCEN1.txt to a predetermined directory.

3. Using the SENS code, open the SCEN1 file from the predetermined directory.

4. Using the mouse pad, click on **Add Events**. This opens the **Event Database** and shows the **Lister Event.**

5. From the **Lister Event**, choose the files that are listed for each of the four non-safety systems, SFW, CCW, SWS and CAS.

6. For SFW, choose and drop the following events:

FWMOD013A	FWX-MV2-GO	SGX-AV-FA
FWMOD013B	FWX-PM2-ER	SGX-CV-GO
FWMOD003A	FWX-PM2-FS	SGX-MV-RP
FWMOD013B	SWN-MAN03	

For CCW, choose and drop the following events:

CCAMOD02
CCAMOD03
CCBMOD01

For CCW, choose and drop the following events:

SWAMOD03
SWAMOD09T
SWBMOD02
SWX-PM-ER

And for CAS, choose and drop the following events:

CANTP011RI	CASMOD03	CA9EPCMPASA
CASMOD01	CASPPRUPT	
CASMOD02	CAX-CM-ER	

7. Using the mouse pad, click on **Quantify**. This brings up a **Quantify Cutsets File** screen. Ensure that both **Sort Cutsets** and **Minimize** are checked and click on **Run.**

8. Calculate the CCDP for this fire scenario. The value of 7.732E-08 was calculated for this particular scenario.

9. The corresponding base AP1000 scenario CCDP for LMFW, obtained from file IEV.IMP, is 2.45E-09.

10. Divide the fire scenario CCDP by the AP1000 scenario CCDP (7.732E-08/2.45E-09) to obtain the ratio of 31.53.

11. Files produced and found in the predetermined directory titled SCEN1 includes SCEN1.TXT SCEN1.WL1, SEN$$$.RPT and SEN$$$.WLT.

For SCEN43 and SCEN44, the CCDPs were calculated by using two cases from Section 46.4 of Reference 2. The first case, Case 29, is the sensitivity analysis of 31 basic events (29 human error probabilities and the indication failure) set to failure by using the SENS code as described above. Case 29 showed that, in general, operator actions are important in maintaining a very low plant core damage frequency for internal events at power.

The second case, Case 31, is a sensitivity study to determine the effects on the core damage frequency, by raising the human error probabilities to 0.1, using the same method for performing this change as used for Case 29. Case 31 also proved that in general operator actions are important in maintaining a very low plant core damage frequency for internal events at power.

The file used from Case 29 and 31 to calculate the CCDP was titled CMTOT.WL1. All initiating events, except for TRANS, were set to zero. Initiating Event Trans was set to 1. The files were saved with the new configuration and closed. WALT was used to recalculate the CCDP based on the new configuration of each file.

Scen45 is a MLOCA event where two I&C divisions (A&C or B&D) are inoperable due to fire; moreover, the DAS cables are also damaged by the fire. Thus, the ADS success criteria of opening 3 of 4 Stage 4 ADS lines cannot be met. The scenario CCDP, without any calculations, is 1.0.

Some of the scenario results are overly conservative. These scenario CCDPs are recalculated, as discussed in Attachment 57A.2, and summarized in Table 57A-5. These results are incorporated into the CCDP summary Table 57A-1.

Table 57A-1 shows all of the AP1000 PRA internal fire analysis for events at power fire scenarios and lists the corresponding initiating event, fire scenario CCDP, AP1000 scenario CCDP and the ratio of the fire scenario CCDP to the AP1000 scenario CCDP.

57A.2 Calculation of Scenario CCDPs for Overly Conservative Cases

In the previous section, AP1000R2 core damage frequency results are used to calculate the fire scenario CCDPs. Examinations of these CCDPs show that some of these CCDP scenarios are overly conservative estimates. These scenarios are 9a, 9b, 10, 11, 11a, 12, and 12a. This section identifies the reasons for the conservatisms and gives the calculations to remove the conservatisms.

Success criteria, event progression, and system failure probabilities not calculated in this section are taken from AP100R2 event trees and core damage quantification.

Scenarios 12 and 12a

In each of these scenarios, two divisions of IDS power failed (A&C or B&D) due to a fire event. Moreover, one of the ADS Stage 4 lines associated with failed divisions opened

spuriously due to a hot short, leading to a spurious ADS (IEV-SPADS) initiating event. In IEV-SPADS, no credit is given for manual actuation of ADS. The full ADS success criterion is 3 of 4 ADS Stage 4 valves opening. The PRA model (conservatively) does not recognize already opened valves due the initiating event. With only A&C or B&D divisions available, and no credit for DAS (operator action), only two valves can be opened. Thus the ¾ success criteria cannot be met if the AP1000R2 model is exercised to calculate the CCDP.

In reality, one ADS fourth Stage line is already open; if the two more valves (supported by the two remaining IDS divisions) can be opened, the success criteria can be met. The failure of a single line of ADS Stage 4 is already calculated (for example in fault tree 41ALA) as q1:

q1 = 7.7E-04/demand.

Failure of either ADS Stage 4 line would fail the ADS. Thus, a lower bound for this failure is q2:

q2 = 2 * 8E-04 = 1.6E-03/demand <= CCDP.

This value is used as the scenario CCDP.

Scenarios 9a and 9b (Scenarios 9 and 13 are the same as 9a)

In each of these scenarios, two divisions of IDS power failed (A&C or B&D) due to a fire event. Moreover, one of the ADS Stage 1, 2 or 3 lines associated with failed divisions opened spuriously due to a hot short, leading to a medium LOCA (IEV-MLOCA) initiating event. In IEV-MLOCA, credit is given for manual actuation of ADS by DAS. However, due to a modeling conservatism in the fault trees, this credit does not show up in the results. The full ADS success criterion is 3 of 4 ADS Stage 4 valves opening. This success criteria cannot be met with PMS actuation since two divisions failed; however, it can be met by taking credit for actuation of ADS Stage 4 by DAS. Thus, the scenario CCDP can be estimated by estimating the failure of DAS actuation.

First fix DAS power subs in 41AL. This is done as a standalone FT named DAS-ACT (located in H:\fire\ads-act.dat and .txt. See Figure 57A-1 and Tables 57A-3 and 57A-4 for FT picture and resulting cutsets.)

Then quantify failure of DAS-ACT (q8):

q8 = Q(DAS-act) = 2.28E-02 <= CCDP.

An examination of the failure cutsets show that this failure probability is dominated by the failure of the operator action (REC-MANDAS = 0.0116) and the reliability goal for DAS (MDAS = 0.01). A discussion with the PRA and HRA analysts, and the designers indicated that:

1. The failure probability of REC-MANDAS is overly conservative, since the PMS has not failed in this case and the operators have ample indicators and cues to actuate ADS by DAS.

2. The DAS actuation logic associated only with ADS Stage 4 is very simple and its reliability is better than 0.99.

By expert opinion, it is decided that the following value is a better representation of the failure probability:

q8 = Q(DAS-act) = 2.28E-03.

This value is used as the scenario CCDP. A sensitivity analysis on this parameter is made later to estimate the effect of this probability being somewhat higher.

Scenarios 11, 11a, 10

In these scenarios, the initiating event is a transient (IEV-TRANS). In each scenario, either two IDS divisions (A&C or B&D), or all four IDS divisions failed due to fire.

The transient event is composed of some consequential events (such as CMLOCA, CSGTR, and/or CSLB) as well as transients only. The probabilities of a transient leading to various consequential events are as follows:

CMLOCA	0.01 * 2.03E-04 (PRHR fails) = 2.0E-06
CSGTR	0.011 * 0.01 = 1.1E-04
CSLB	0.011

For a transient-only event (no consequential event) to lead to core damage, main feedwater, startup feedwater, and passive RHR must fail. This is already calculated as:

q10 =q(XSTW fails) = FWT * SFWT * PRT failure = 3.06E-06.

If this occurs, the ADS success criteria can only be met by manual actuation via DAS. Thus, the CCDP estimate is:

q4 = Q(DAS-act * xswt) = 1.85E-07 (Boolean product; stored in file junk.wlk, given as Table 57A-5).

For the consequential events, CSGTR dominates. The CSGTR ADS criteria can be met by ADS actuation via DAS. The CCDP estimate for this event is:

q6 = 1.1E-04 * 2.28E-02 = 2.51E-06

Thus, the total CCDP estimate for transients (including consequential events) is:

q3 = q4 + q6 = 1.85E-07 + 2.51E-06 = 2.7E-06/demand.

This value is used as the scenario CCDP.

DAS-ACT Fault Tree Model

The fault tree Model and resulting cutsets for DAS-ACT are shown in attached Figure 57A-1, and Tables 57A-3 and 57A-4 (before and after cutset reduction).

Table 57A-1 (Sheet 1 of 5)

SUMMARY OF SCENARIO CCDPs

Initiating Event	Scenario Description (additional failures)	Fire Scenario CCDP	Case No.	AP1000 CCDP	Ratio f/a
		f		a	
IEV-LMFW	Loss of SFW, CCW, SWS, CAS	7.73E-08	SCEN1	2.45E-09	31.53
IEV-TRANS	Loss of SFW, CCW, SWS, CAS	7.51E-08	SCEN1A	2.10E-09	35.72
IEV-LMFW	Loss of SFW, CCW, SWS, CAS, Div D	1.93E-07	SCEN2	2.45E-09	78.51
IEV-LMFW	Loss of SFW, CCW, SWS, CAS, Div B	1.93E-07	SCEN2A	2.45E-09	78.51
IEV-SPADS	Loss of SFW, CCW, SWS, CAS, Div D	1.25E-03	SCEN3	5.48E-04	2.28
IEV-SPADS	Loss of SFW, CCW, SWS, CAS, Div D	1.25E-03	SCEN3A	5.48E-04	2.28
IEV-SPADS	Loss of Division B power	1.25E-03	SCEN3B	5.48E-04	2.28
IEV-SPADS	Loss of Division A power	1.25E-03	SCEN3C	5.48E-04	2.28
IEV-SPADS	Loss of Division D power	1.25E-03	SCEN3D	5.48E-04	2.28
IEV-LOSP	Loss of SFW, CCW, SWS, CAS, power on main AC buses OTH-R05 = 1	1.05E-07	SCEN4A	8.37E-09	12.54
IEV-LOSP	Loss of SFW, CCW, SWS, CAS, Div D, power on main AC buses	1.63E-07	SCEN5	8.37E-09	19.45
IEV-LOSP	Loss of SFW, CCW, SWS, CAS, Div D, power on main AC buses OTH-R05=1	2.33E-07	SCEN5A	8.37E-09	27.82
IEV-LMFW	Loss of one train of SFW, CCW, SWS, CAS	7.73E-08	SCEN6	2.45E-09	31.53
IEV-LMFW	Loss of one train of SFW, CCW, SWS, CAS, Div D	1.93E-07	SCEN7	2.45E-09	78.72

Table 57A-1 (Sheet 2 of 5)

SUMMARY OF SCENARIO CCDPs

Initiating Event	Scenario Description (additional failures)	Fire Scenario CCDP	Case No.	AP1000 CCDP	Ratio f/a
IEV-LOSP	AC power not recoverable after LOSP	1.02E-07	SCEN8	8.37E-09	12.18
IEV-MLOCA	Loss of Division B and D power	2.28E-03	SCEN9	3.69E-05	61.7
IEV-MLOCA	Loss of Division B and D power	2.28E-03	SCEN9A	3.69E-05	61.7
IEV-MLOCA	Loss of Division A and C power	2.28E-03	SCEN9B	3.69E-05	61.7
IEV-TRANS	Loss of A, B, C and D power	2.70E-06	SCEN10	2.10E-09	1.284
IEV-TRANS	Loss of Division A and C power	2.70E-06	SCEN11	2.10E-09	1284
IEV-TRANS	Loss of Division B and D power	2.70E-06	SCEN11A	2.10E-09	1.284
IEV-SPADS	Loss of Division A and C power	1.60E-03	SCEN12	5.48E-04	2.92
IEV-SPADS	Loss of Division B and D power	1.60E-03	SCEN12A	5.48E-04	2.92
IEV-MLOCA	Loss of Division A and C power	2.28E-03	SCEN13	3.69E-05	61.7
IEV-TRANS	Loss of Division A power	2.70E-09	SCEN14	2.10E-09	1.28
IEV-TRANS	Loss of Division D power	7.47E-08	SCEN14A	2.10E-09	35.53
IEV-TRANS	Loss of Division B power	7.23E-08	SCEN14B	2.10E-09	34.39
IEV-TRANS	Loss of CVS	2.10E-09	SCEN15	2.10E-09	1.00
IEV-TRANS	Loss of RNS and CVS	2.55E-09	SCEN15A	2.10E-09	1.21
IEV-TRANS	Loss of Division C power and CVS	2.70E-09	SCEN16	2.10E-09	1.28
IEV-TRANS	Loss of Reactor Trip Switchgear I	2.10E-09	SCEN17	2.10E-09	1.00

Table 57A-1 (Sheet 3 of 5)

SUMMARY OF SCENARIO CCDPs

Initiating Event	Scenario Description (additional failures)	Fire Scenario CCDP	Case No.	AP1000 CCDP	Ratio f/a
IEV-MLOCA	Loss of DAS, RNS, and CVS	1.31E-03	SCEN18	3.69E-05	35.46
IEV-SPADS	Loss of RNS, CVS and DAS	1.02E-03	SCEN19	5.48E-04	1.86
IEV-MLOCA	Loss of Division B power	8.07E-04	SCEN20	3.69E-05	21.84
IEV-MLOCA	Loss of Division D power	8.07E-04	SCEN20A	3.69E-05	21.84
IEV-MLOCA	Loss of Division C power	8.07E-04	SCEN20B	3.69E-05	21.84
IEV-MLOCA	Loss of Division A power	8.07E-04	SCEN20C	3.69E-05	21.84
IEV-TRANS	Loss of DAS & non-1E electrical division	1.38E-06	SCEN21	2.10E-09	657.14
IEV-TRANS	Loss of Division C, DAS & non-1E electrical division	1.38E-06	SCEN22	2.10E-09	657.14
IEV-MLOCA	Loss of Division C, DAS & non-1E electrical division	2.05E-03	SCEN23	5.48E-04	3.74
IEV-MLOCA	Loss of Division C, DAS & non-1E electrical division	2.05E-03	SCEN24	3.69E-05	55.49
IEV-SPADS	Loss of Division C power	1.25E-03	SCEN25	5.48E-04	2.28
IEV-LMFW	Loss of MFW and SFW	7.73E-08	SCEN26	2.45E-09	31.53
IEV-LOSP	Loss of SFW, CCW, SWS, CAS, Div D	1.08E-07	SCEN27	8.37E-09	12.90
IEV-LOSP	Loss of SFW, CCW, SWS, CAS	1.87E-08	SCEN28	8.37E-09	2.23
IEV-TRANS	Loss of IRWST valves 117A, 118A, 120A, 123A and 125A	2.10E-09	SCEN29	2.10E-09	1.00
IEV-TRANS	Loss of RNS MOV-023	2.55E-09	SCEN30	2.10E-09	1.21
IEV-LMFW	Loss of 1 CMT, MFW & SFW	7.34E-08	SCEN31	2.45E-09	29.94

Table 57A-1 (Sheet 4 of 5)

SUMMARY OF SCENARIO CCDPs

Initiating Event	Scenario Description (additional failures)	Fire Scenario CCDP	Case No.	AP1000 CCDP	Ratio f/a
IEV-LMFW	Loss of A & C Div, 2 CMT, MFW, SFW, DAS, 1 train of CCW, non-1E electrical division & hydrogen igniters	4.81E-04	SCEN32	2.45E-09	1.96E+05
IEV-TRANS	Loss of A & C Div, 2 CMT, DAS, 1 train of CCW, non-1E electrical division & hydrogen igniters	2.46E-06	SCEN33	2.10E-09	1170.04
IEV-SPADS	Loss of A & C Div, 2 CMT, MFW, SFW, DAS, 1 train of CCW, non-1E electrical division & hydrogen igniters	1.00E+00	SCEN34	5.48E-04	1824.82
IEV-SPADS	Loss of MFW and SFW	5.48E-04	N/A	5.48E-04	1.00
IEV-TRANS	Loss of 1 Stage 1, 2 & 3 of ADS	2.99E-09	SCEN35	2.10E-09	1.42
IEV-MLOCA	Loss of 1 Stage 1, 2 & 3 of ADS	4.03E-05	SCEN36	3.69E-05	1.09
IEV-LMFW	Loss of Div B & D, MFW and SFW	1.08E-06	SCEN37	2.45E-09	440.50
IEV-TRANS	Loss of Division A & DAS	1.38E-06	SCEN38	2.10E-09	657.14
IEV-MLOCA	Loss of Div A, DAS, non-1E electrical division & hydrogen igniters	1.94E-03	SCEN39	3.69E-05	52.51
IEV-TRANS	Loss of Division A & C, one CMT, one PRHR isolation valve and one path of CCW	1.02E-06	SCEN40	2.10E-09	485.71
IEV-TRANS	Loss of two diesel generators	2.10E-09	SCEN41	2.10E-09	1.00
IEV-SPADS	Loss of A & C Div, MFW, SFW, 1 PRHR isolation valve, 1 CMT, DAS, 1 train of CCW, non-1E electrical division & hydrogen igniters	2.50E-03	SCEN42	2.10E-09	1.19E+06

Table 57A-1 (Sheet 5 of 5)

SUMMARY OF SCENARIO CCDPs

Initiating Event	Scenario Description (additional failures)	Fire Scenario CCDP	Case No.	AP1000 CCDP	Ratio f/a
IEV-TRANS	ALL HEP set to 1	2.91E-08	SCEN43	2.10E-09	13.86
IEV-TRANS	ALL HEP set to 0.1	4.35E-09	SCEN44	2.10E-09	2.07
IEV-MLOCA	Loss of A&C divisions (or B&D divisions) and loss of DAS	1.0	SCEN45	3.69E-05	27100

Table 57A-2

AP1000 BASE CASE CCDPs FOR INITIATING EVENTS

	Initiating Event	% Contribution to Plant CDF	# of Cutsets	Initiating Event CDF	Initiating Event Frequency	Initiating Event CCDP
1	IEV-SI-LB	39.5	1120	9.50E-08	2.12E-04	4.48E-04
2	IEV-LLOCA	18.7	286	4.50E-08	5.00E-06	8.99E-03
3	IEV-SPADS	12.3	1078	2.96E-08	5.40E-05	5.48E-04
4	IEV-SLOCA	7.52	1639	1.81E-08	5.00E-04	3.61E-05
5	IEV-MLOCA	6.7	1682	1.61E-08	4.36E-04	3.69E-05
6	IEV-RV-RP	4.16	1	1.00E-08	1.00E-08	1.00E+00
7	IEV-SGTR	2.77	2730	6.66E-09	3.88E-03	1.72E-06
8	IEV-CMTLB	1.53	989	3.68E-09	9.31E-05	3.95E-05
9	IEV-ATWS	1.51	145	3.62E-09	4.81E-01	7.53E-09
10	IEV-TRANS	1.22	1254	2.94E-09	1.40E+00	2.10E-09
11	IEV-POWEX	0.69	692	1.66E-09	4.50E-03	3.69E-07
12	IEV-RCSLK	0.69	1428	1.65E-09	6.20E-03	2.66E-07
13	IEV-LCOND	0.51	838	1.24E-09	1.12E-01	1.11E-08
14	IEV-LOSP	0.42	2224	1.00E-09	1.20E-01	8.37E-09
15	IEV-LMFW	0.34	1285	8.21E-10	3.35E-01	2.45E-09
16	IEV-ATW-T	0.3	15	7.13E-10	1.17E+00	6.09E-10
17	IEV-LCAS	0.28	416	6.72E-10	3.48E-02	1.93E-08
18	IEV-SLB-V	0.25	305	6.06E-10	1.21E-03	5.01E-07
19	IEV-PRSTR	0.18	320	4.29E-10	1.34E-04	3.20E-06
20	IEV-LMFW1	0.18	740	4.26E-10	1.92E-01	2.22E-09
21	IEV-LCCW	0.13	692	3.16E-10	1.44E-01	2.20E-09
22	IEV-SLB-U	0.05	160	1.31E-10	3.72E-04	3.51E-07
23	IEV-ATW-S	0.05	55	1.11E-10	1.48E-02	7.49E-09
24	IEV-ISLOC	0.02	1	5.00E-11	5.00E-11	1.00E+00
25	IEV-LRCS	0.01	131	3.33E-11	1.80E-02	1.85E-09
26	IEV-SLB-D	0	18	9.15E-12	5.96E-04	1.54E-08

Table 57A-3

DAS-ACT FAULT TREE CUTSETS BEFORE SUBTREE REDUCTION

DAS-ACT.CMP file

```
VER 1.6
h:\fire\das-act.cut                                                    Ver. 2.0   5/31/**  14:00:16
7       6  2.074E-01  0.000E+00  1.000E-14
             1  MDAS                 1.0000E-02     0.0000E+00
             2  CMX-VS-FA            3.8400E-05     0.0000E+00
             3  CCX-XMTR             4.7800E-04     0.0000E+00
             4  SUB-ED1EA14          1.0000E-01     0.0000E+00
             5  SUB-ED2EA14          1.0000E-01     0.0000E+00
             6  REC-MANDAS           1.1600E-02     0.0000E+00
             7  ALL-IND-FAIL         1.0000E-06     0.0000E+00
             1.    1.00E-01    1    SUB-ED2EA14
             2.    1.00E-01    1    SUB-ED1EA14
             3.    1.16E-02    1    REC-MANDAS
             4.    1.00E-02    1    MDAS
             5.    1.00E-06    1    ALL-IND-FAIL
             6.    1.84E-08    2    CMX-VS-FA           CCX-XMTR
```

Table 57A-4 (Sheet 1 of 10)

DAS-ACT FAULT TREE CUTSETS AFTER SUBTREE REDUCTION

Cutsets of DAS-ACT (das-act.wlk file)

```
VER 1.6
 File created by linking DAS-ACT.WLK    WLINK4 ** Ver. 1.0  **
   81     299  2.282E-02 0.00   1.00E-14
              1  ALL-IND-FAIL          1.0000E-06     0.0000E+00
              2  CCX-BC-SA1            8.4000E-06     0.0000E+00
              3  CCX-BY-PN1            5.7000E-05     0.0000E+00
              4  CCX-IV-XR1            2.4000E-05     0.0000E+00
              5  CCX-RE-TA1            3.0000E-06     0.0000E+00
              6  CCX-XMTR              4.7800E-04     0.0000E+00
              7  CMX-VS-FA             3.8400E-05     0.0000E+00
              8  DG1-LOGIC             5.0000E-03     0.0000E+00
              9  DG2-LOGIC             5.0000E-03     0.0000E+00
             10  EC0MOD01              5.0800E-03     0.0000E+00
             11  EC1BS001LF            4.8000E-06     0.0000E+00
             12  EC1BS001TM            2.7000E-03     0.0000E+00
             13  EC1BS011TM            2.7000E-03     0.0000E+00
             14  EC1BS111TM            2.7000E-03     0.0000E+00
             15  EC1BS112TM            2.7000E-03     0.0000E+00
             16  EC1CB100RQ            1.4400E-05     0.0000E+00
             17  EC1CB100VO            4.2000E-03     0.0000E+00
             18  EC1MOD01              6.9100E-05     0.0000E+00
             19  EC1MOD11              4.8000E-05     0.0000E+00
             20  EC1MOD111             1.6800E-05     0.0000E+00
             21  EC1MOD112             1.6800E-05     0.0000E+00
             22  EC2BS002LF            4.8000E-06     0.0000E+00
             23  EC2BS002TM            2.7000E-03     0.0000E+00
             24  EC2BS021TM            2.7000E-03     0.0000E+00
             25  EC2BS023TM            2.7000E-03     0.0000E+00
             26  EC2BS211TM            2.7000E-03     0.0000E+00
             27  EC2BS212TM            2.7000E-03     0.0000E+00
             28  EC2CB200RQ            1.4400E-05     0.0000E+00
             29  EC2CB200VO            4.2000E-03     0.0000E+00
             30  EC2MOD01              6.9100E-05     0 0000E+00
             31  EC2MOD21              4.8000E-05     0.0000E+00
             32  EC2MOD211             1.6800E-05     0.0000E+00
             33  EC2MOD212             1.6800E-05     0.0000E+00
             34  EC2MOD23              4.8000E-05     0.0000E+00
             35  ECX-CB-GC             7.3000E-04     0.0000E+00
```

Table 57A-4 (Sheet 2 of 10)

DAS-ACT FAULT TREE CUTSETS AFTER SUBTREE REDUCTION

36	ECX-CB-GO	4.2000E-04	0.0000E+00
37	ED1BSDS1LF	4.8000E-06	0.0000E+00
38	ED1BSDS1TM	3.0000E-04	0.0000E+00
39	ED1MOD01	5.0400E-04	0.0000E+00
40	ED1MOD02	1.9200E-04	0.0000E+00
41	ED1MOD03	2.7000E-03	0.0000E+00
42	ED1MOD04	2.1900E-02	0.0000E+00
43	ED1MOD06	3.4800E-04	0.0000E+00
44	ED1MOD07	3.0500E-04	0.0000E+00
45	ED1MOD11	3.1700E-04	0.0000E+00
46	ED1MOD111	3.1700E-04	0.0000E+00
47	ED1MOD14	3.1700E-04	0.0000E+00
48	ED2BSDS1LF	4.8000E-06	0.0000E+00
49	ED2BSDS1TM	3.0000E-04	0.0000E+00
50	ED2MOD01	5.0400E-04	0.0000E+00
51	ED2MOD02	1.9200E-04	0.0000E+00
52	ED2MOD03	2.7000E-03	0.0000E+00
53	ED2MOD04	2.1900E-02	0.0000E+00
54	ED2MOD06	3.4800E-04	0.0000E+00
55	ED2MOD07	3.0500E-04	0.0000E+00
56	ED2MOD11	3.1700E-04	0.0000E+00
57	ED2MOD14	3.1700E-04	0.0000E+00
58	ED4BSDS1LF	4.8000E-06	0.0000E+00
59	ED4BSDS1TM	3.0000E-04	0.0000E+00
60	ED4MOD02	1.9200E-04	0.0000E+00
61	ED4MOD03	2.7000E-03	0.0000E+00
62	ED4MOD11	3.1700E-04	0.0000E+00
63	ED4MOD112	3.1700E-04	0.0000E+00
64	MDAS	1.0000E-02	0.0000E+00
65	REC-MANDASF	2.5600E-03	0.0000E+00
66	ZANMOD01	8.4000E-05	0.0000E+00
67	ZANTR-2AHF	2.8800E-05	0.0000E+00
68	ZANTR-2BHF	2.8800E-05	0.0000E+00
69	ZO1DG001TM	4.6000E-02	0.0000E+00
70	ZO1MOD01	2.0200E-02	0.0000E+00
71	ZO1MOD03	1.0000E-04	0.0000E+00
72	ZO1MOD04	1.2500E-03	0.0000E+00
73	ZO2DG002TM	4.6000E-02	0.0000E+00
74	ZO2MOD01	2.0200E-02	0.0000E+00
75	ZO2MOD03	1.0000E-04	0.0000E+00
76	ZO2MOD04	1.2500E-03	0.0000E+00

Table 57A-4 (Sheet 3 of 10)

DAS-ACT FAULT TREE CUTSETS AFTER SUBTREE REDUCTION

77	ZOX-BL-ES		6.0000E-05	0.0000E+00	
78	ZOX-DG-DR		4.4000E-04	0.0000E+00	
79	ZOX-DG-DS		2.8000E-04	0.0000E+00	
80	ZOX-PD-ER		1.3000E-04	0.0000E+00	
81	ZOX-PD-ES		2.0000E-03	0.0000E+00	
1.	1.16E-02	1	REC-MANDAS		
2.	1.00E-02	1	MDAS		
3.	3.17E-04	1	ED2MOD14		
4.	3.17E-04	1	ED1MOD14		
5.	3.05E-04	1	ED2MOD07		
6.	3.05E-04	1	ED1MOD07		
7.	1.37E-05	2	ED2MOD03	EC0MOD01	
8.	1.37E-05	2	ED1MOD03	EC0MOD01	
9.	1.10E-05	2	ED2MOD01	ED2MOD04	
10.	1.10E-05	2	ED1MOD01	ED1MOD04	
11.	7.29E-06	2	ED2MOD03	EC2BS002TM	
12.	7.29E-06	2	ED2MOD03	EC2BS021TM	
13.	7.29E-06	2	ED1MOD03	EC1BS001TM	
14.	7.29E-06	2	ED1MOD03	EC1BS011TM	
15.	6.57E-06	2	ED2MOD04	ED2BSDS1TM	
16.	6.57E-06	2	ED1MOD04	ED1BSDS1TM	
17.	1.52E-06	2	ED2BSDS1TM	EC0MOD01	
18.	1.52E-06	2	ED1BSDS1TM	EC0MOD01	
19.	1.36E-06	2	ED2MOD01	EC2BS002TM	
20.	1.36E-06	2	ED2MOD01	EC2BS021TM	
21.	1.36E-06	2	ED2MOD01	EC2BS212TM	
22.	1.36E-06	2	ED1MOD01	EC1BS001TM	
23.	1.36E-06	2	ED1MOD01	EC1BS011TM	
24.	1.36E-06	2	ED1MOD01	EC1BS112TM	
25.	1.00E-06	1	ALL-IND-FAIL		
26.	8.56E-07	2	ED2MOD03	ED4MOD112	
27.	8.56E-07	2	ED2MOD03	ED4MOD11	
28.	8.56E-07	2	ED1MOD03	ED4MOD112	
29.	8.56E-07	2	ED1MOD03	ED4MOD11	
30.	8.10E-07	2	ED2BSDS1TM	EC2BS002TM	
31.	8.10E-07	2	ED2BSDS1TM	EC2BS021TM	
32.	8.10E-07	2	ED2BSDS1TM	EC2BS212TM	
33	8.10E-07	2	ED2MOD03	ED4BSDS1TM	
34.	8.10E-07	2	ED1BSDS1TM	EC1BS001TM	
35.	8.10E-07	2	ED1BSDS1TM	EC1BS011TM	
36.	8.10E-07	2	ED1BSDS1TM	EC1BS112TM	

Table 57A-4 (Sheet 4 of 10)

DAS-ACT FAULT TREE CUTSETS AFTER SUBTREE REDUCTION

37.	8.10E-07	2	ED1MOD03	ED4BSDS1TM	
38.	5.26E-07	2	CCX-IV-XR1	ED2MOD04	
39.	5.26E-07	2	CCX-IV-XR1	ED1MOD04	
40.	2.90E-07	2	CCX-BY-PN1	EC0MOD01	
41.	2.27E-07	2	ED2MOD03	ZANMOD01	
42.	2.27E-07	2	ED1MOD03	ZANMOD01	
43.	1.75E-07	2	ED2MOD01	ED2MOD06	
44.	1.75E-07	2	ED1MOD01	ED1MOD06	
45.	1.60E-07	3	ED2MOD04	ED2MOD03	EC2BS211TM
46.	1.60E-07	3	ED1MOD04	ED1MOD03	EC1BS111TM
47.	1.54E-07	2	CCX-BY-PN1	EC2BS002TM	
48.	1.54E-07	2	CCX-BY-PN1	EC2BS021TM	
49.	1.54E-07	2	CCX-BY-PN1	EC2BS023TM	
50.	1.54E-07	2	CCX-BY-PN1	EC1BS001TM	
51.	1.54E-07	2	CCX-BY-PN1	EC1BS011TM	
52.	1.30E-07	2	ED2MOD03	EC2MOD21	
53.	1.30E-07	2	ED1MOD03	EC1MOD11	
54.	1.18E-07	3	ED2MOD01	ZO2DG002TM	EC0MOD01
55.	1.18E-07	3	ED1MOD01	ZO1DG001TM	EC0MOD01
56.	1.05E-07	2	ED2MOD04	ED2BSDS1LF	
57.	1.05E-07	2	ED1MOD04	ED1BSDS1LF	
58.	1.04E-07	2	ED2BSDS1TM	ED2MOD06	
59.	1.04E-07	2	ED1BSDS1TM	ED1MOD06	
60.	9.51E-08	2	ED2BSDS1TM	ED4MOD112	
61.	9.51E-08	2	ED2BSDS1TM	ED4MOD11	
62.	9.51E-08	2	ED1BSDS1TM	ED4MOD112	
63.	9.51E-08	2	ED1BSDS1TM	ED4MOD11	
64.	9.00E-08	2	ED2BSDS1TM	ED4BSDS1TM	
65.	9.00E-08	2	ED1BSDS1TM	ED4BSDS1TM	
66.	7.78E-08	2	ED2MOD03	ZANTR-2BHF	
67.	7.78E-08	2	ED1MOD03	ZANTR-2AHF	
68.	6.48E-08	2	CCX-IV-XR1	EC2BS002TM	
69.	6.48E-08	2	CCX-IV-XR1	EC2BS021TM	
70.	6.48E-08	2	CCX-IV-XR1	EC2BS212TM	
71.	6.48E-08	2	CCX-IV-XR1	EC1BS001TM	
72.	6.48E-08	2	CCX-IV-XR1	EC1BS011TM	
73.	6.48E-08	2	CCX-IV-XR1	EC1BS112TM	
74.	5.17E-08	3	ED2MOD01	ZO2MOD01	EC0MOD01
75.	5.17E-08	3	ED1MOD01	ZO1MOD01	EC0MOD01
76.	3.89E-08	2	ED2MOD03	EC2CB200RQ	
77.	3.89E-08	2	ED1MOD03	EC1CB100RQ	

Table 57A-4 (Sheet 5 of 10)

DAS-ACT FAULT TREE CUTSETS AFTER SUBTREE REDUCTION

78.	2.52E-08	2	ED2BSDS1TM	ZANMOD01	
79.	2.52E-08	2	ED1BSDS1TM	ZANMOD01	
80.	2.44E-08	2	ED2BSDS1LF	EC0MOD01	
81.	2.44E-08	2	ED1BSDS1LF	EC0MOD01	
82.	2.42E-08	2	ED2MOD01	EC2MOD21	
83.	2.42E-08	2	ED1MOD01	EC1MOD11	
84.	1.97E-08	3	ED2MOD03	EC2BS211TM	EC2BS212TM
85.	1.97E-08	3	ED2MOD03	ED4MOD03	EC2BS023TM
86.	1.97E-08	3	ED1MOD03	EC1BS111TM	EC1BS112TM
87.	1.97E-08	3	ED1MOD03	ED4MOD03	EC2BS023TM
88.	1.97E-08	3	ED1MOD03	ED4MOD03	EC2BS002TM
89.	1.84E-08	2	CMX-VS-FA	CCX-XMTR	
90.	1.81E-08	2	CCX-BY-PN1	ED4MOD112	
91.	1.81E-08	2	CCX-BY-PN1	ED4MOD11	
92.	1.71E-08	2	CCX-BY-PN1	ED4BSDS1TM	
93.	1.44E-08	2	ED2BSDS1TM	EC2MOD21	
94.	1.44E-08	2	ED1BSDS1TM	EC1MOD11	
95.	1.30E-08	2	ED2BSDS1LF	EC2BS002TM	
96.	1.30E-08	2	ED2BSDS1LF	EC2BS021TM	
97.	1.30E-08	2	ED2BSDS1LF	EC2BS212TM	
98.	1.30E-08	2	ED2MOD03	EC2BS002LF	
99.	1.30E-08	2	ED2MOD03	ED4BSDS1LF	
100.	1.30E-08	2	ED1BSDS1LF	EC1BS001TM	
101.	1.30E-08	2	ED1BSDS1LF	EC1BS011TM	
102.	1.30E-08	2	ED1BSDS1LF	EC1BS112TM	
103.	1.30E-08	2	ED1MOD03	EC1BS001LF	
104.	1.30E-08	2	ED1MOD03	ED4BSDS1LF	
105.	1.28E-08	3	ED1MOD01	EC0MOD01	DG1-LOGIC
106.	1.14E-08	3	ED2MOD04	ED2MOD02	ED2MOD03
107.	1.14E-08	3	ED1MOD04	ED1MOD02	ED1MOD03
108.	1.09E-08	2	CCX-BY-PN1	ED4MOD02	
109.	1.08E-08	3	ED2MOD01	EC2CB200VO	EC0MOD01
110.	1.08E-08	3	ED1MOD01	EC1CB100VO	EC0MOD01
111.	8.64E-09	2	ED2BSDS1TM	ZANTR-2BHF	
112.	8.64E-09	2	ED1BSDS1TM	ZANTR-2AHF	
113.	8.47E-09	2	ED2MOD01	EC2MOD212	
114.	8.47E-09	2	ED1MOD01	EC1MOD112	
115.	8.35E-09	2	CCX-IV-XR1	ED2MOD06	
116.	8.35E-09	2	CCX-IV-XR1	ED1MOD06	
117.	7.35E-09	3	ED2MOD01	ZO2DG002TM	ED4MOD112
118.	7.35E-09	3	ED2MOD01	ZO2DG002TM	ED4MOD11

Table 57A-4 (Sheet 6 of 10)

DAS-ACT FAULT TREE CUTSETS AFTER SUBTREE REDUCTION

119.	7.35E-09	3	ED1MOD01	ZO1DG001TM	ED4MOD112
120.	7.35E-09	3	ED1MOD01	ZO1DG001TM	ED4MOD11
121.	6.96E-09	3	ED2MOD01	ZO2DG002TM	ED4BSDS1TM
122.	6.96E-09	3	ED1MOD01	ZO1DG001TM	ED4BSDS1TM
123.	5.61E-09	3	CCX-IV-XR1	ZO2DG002TM	EC0MOD01
124.	5.61E-09	3	CCX-IV-XR1	ZO1DG001TM	EC0MOD01
125.	5.12E-09	3	ED2MOD01	ZOX-PD-ES	EC0MOD01
126.	5.12E-09	3	ED1MOD01	ZOX-PD-ES	EC0MOD01
127.	5.04E-09	2	ED2BSDS1TM	EC2MOD212	
128.	5.04E-09	2	ED1BSDS1TM	EC1MOD112	
129.	4.79E-09	2	CCX-BY-PN1	ZANMOD01	
130.	4.32E-09	2	ED2BSDS1TM	EC2CB200RQ	
131.	4.32E-09	2	ED1BSDS1TM	EC1CB100RQ	
132.	3.37E-09	3	ED2MOD04	CCX-BY-PN1	EC2BS211TM
133.	3.37E-09	3	ED1MOD04	CCX-BY-PN1	EC1BS111TM
134.	3.23E-09	3	ED2MOD01	ZO2MOD01	ED4MOD112
135.	3.23E-09	3	ED2MOD01	ZO2MOD01	ED4MOD11
136.	3.23E-09	3	ED1MOD01	ZO1MOD01	ED4MOD112
137.	3.23E-09	3	ED1MOD01	ZO1MOD01	ED4MOD11
138.	3.20E-09	3	ED2MOD01	ZO2MOD04	EC0MOD01
139.	3.20E-09	3	ED1MOD01	ZO1MOD04	EC0MOD01
140.	3.05E-09	3	ED2MOD01	ZO2MOD01	ED4BSDS1TM
141.	3.05E-09	3	ED1MOD01	ZO1MOD01	ED4BSDS1TM
142.	2.74E-09	2	CCX-BY-PN1	EC2MOD21	
143.	2.74E-09	2	CCX-BY-PN1	EC2MOD23	
144.	2.74E-09	2	CCX-BY-PN1	EC1MOD11	
145.	2.54E-09	3	ED2MOD03	EC2BS211TM	ED2MOD06
146.	2.54E-09	3	ED1MOD03	EC1BS111TM	ED1MOD06
147.	2.46E-09	3	CCX-IV-XR1	ZO2MOD01	EC0MOD01
148.	2.46E-09	3	CCX-IV-XR1	ZO1MOD01	EC0MOD01
149.	2.42E-09	2	ED2MOD01	EC2BS002LF	
150.	2.42E-09	2	ED1MOD01	EC1BS001LF	
151.	2.19E-09	3	ED2BSDS1TM	ED4MOD03	EC2BS023TM
152.	2.19E-09	3	ED1BSDS1TM	ED4MOD03	EC2BS023TM
153.	2.19E-09	3	ED1BSDS1TM	ED4MOD03	EC2BS002TM
154.	1.95E-09	3	ED2MOD01	ZANMOD01	ZO2DG002TM
155.	1.95E-09	3	ED1MOD01	ZANMOD01	ZO1DG001TM
156.	1.87E-09	3	ED2MOD01	ECX-CB-GC	EC0MOD01
157.	1.87E-09	3	ED1MOD01	ECX-CB-GC	EC0MOD01
158.	1.67E-09	2	ED2BSDS1LF	ED2MOD06	
159.	1.67E-09	2	ED1BSDS1LF	ED1MOD06	

Table 57A-4 (Sheet 7 of 10)

DAS-ACT FAULT TREE CUTSETS AFTER SUBTREE REDUCTION

160.	1.64E-09	2	CCX-BY-PN1	ZANTR-2BHF	
161.	1.64E-09	2	CCX-BY-PN1	ZANTR-2AHF	
162.	1.52E-09	2	ED2BSDS1LF	ED4MOD112	
163.	1.52E-09	2	ED2BSDS1LF	ED4MOD11	
164.	1.52E-09	2	ED1BSDS1LF	ED4MOD112	
165.	1.52E-09	2	ED1BSDS1LF	ED4MOD11	
166.	1.51E-09	2	ED2MOD01	CCX-RE-TA1	
167.	1.51E-09	2	ED1MOD01	CCX-RE-TA1	
168.	1.44E-09	2	ED2BSDS1TM	EC2BS002LF	
169.	1.44E-09	2	ED2BSDS1TM	ED4BSDS1LF	
170.	1.44E-09	2	ED2BSDS1LF	ED4BSDS1TM	
171.	1.44E-09	2	ED1BSDS1TM	EC1BS001LF	
172.	1.44E-09	2	ED1BSDS1TM	ED4BSDS1LF	
173.	1.44E-09	2	ED1BSDS1LF	ED4BSDS1TM	
174.	1.40E-09	3	ED2MOD02	ED2MOD03	EC2BS212TM
175.	1.40E-09	3	ED2MOD03	ED4MOD02	ED4MOD03
176.	1.40E-09	3	ED1MOD02	ED1MOD03	EC1BS112TM
177.	1.40E-09	3	ED1MOD03	ED4MOD02	ED4MOD03
178.	1.15E-09	2	CCX-IV-XR1	EC2MOD21	
179.	1.15E-09	2	CCX-IV-XR1	EC1MOD11	
180.	1.13E-09	3	ED2MOD01	ZOX-DG-DR	EC0MOD01
181.	1.13E-09	3	ED1MOD01	ZOX-DG-DR	EC0MOD01
182.	1.08E-09	3	ED2MOD01	ECX-CB-GO	EC0MOD01
183.	1.08E-09	3	ED1MOD01	ECX-CB-GO	EC0MOD01
184.	9.93E-10	3	ED2MOD04	ED2MOD03	EC2MOD211
185.	9.93E-10	3	ED1MOD04	ED1MOD03	EC1MOD111
186.	9.00E-10	2	CCX-RE-TA1	ED2BSDS1TM	
187.	9.00E-10	2	CCX-RE-TA1	ED1BSDS1TM	
188.	8.55E-10	3	ED2MOD01	ZANMOD01	ZO2MOD01
189.	8.55E-10	3	ED1MOD01	ZANMOD01	ZO1MOD01
190.	8.21E-10	2	CCX-BY-PN1	EC2CB200RQ	
191.	8.21E-10	2	CCX-BY-PN1	EC1CB100RQ	
192.	8.12E-10	3	ED2MOD01	EC0MOD01	ED2MOD11
193.	8.12E-10	3	ED2MOD01	EC0MOD01	ED1MOD111
194.	8.12E-10	3	ED1MOD01	EC0MOD01	ED1MOD11
195.	8.12E-10	3	ED1MOD01	EC0MOD01	ED1MOD111
196.	7.99E-10	3	ED1MOD01	DG1-LOGIC	ED4MOD112
197.	7.99E-10	3	ED1MOD01	DG1-LOGIC	ED4MOD11
198.	7.56E-10	3	ED1MOD01	DG1-LOGIC	ED4BSDS1TM
199.	7.17E-10	3	ED2MOD01	ZOX-DG-DS	EC0MOD01
200.	7.17E-10	3	ED1MOD01	ZOX-DG-DS	EC0MOD01

Table 57A-4 (Sheet 8 of 10)

DAS-ACT FAULT TREE CUTSETS AFTER SUBTREE REDUCTION

201.	6.71E-10	3	ED2MOD01	EC2CB200VO	ED4MOD112
202.	6.71E-10	3	ED2MOD01	EC2CB200VO	ED4MOD11
203.	6.71E-10	3	ED1MOD01	EC1CB100VO	ED4MOD112
204.	6.71E-10	3	ED1MOD01	EC1CB100VO	ED4MOD11
205.	6.68E-10	3	ED2MOD01	ZANTR-2BHF	ZO2DG002TM
206.	6.68E-10	3	ED1MOD01	ZANTR-2AHF	ZO1DG001TM
207.	6.35E-10	3	ED2MOD01	EC2CB200VO	ED4BSDS1TM
208.	6.35E-10	3	ED1MOD01	EC1CB100VO	ED4BSDS1TM
209.	6.10E-10	3	CCX-IV-XR1	EC0MOD01	DG2-LOGIC
210.	6.10E-10	3	CCX-IV-XR1	EC0MOD01	DG1-LOGIC
211.	5.12E-10	3	CCX-IV-XR1	EC2CB200VO	EC0MOD01
212.	5.12E-10	3	CCX-IV-XR1	EC1CB100VO	EC0MOD01
213.	4.97E-10	3	ED2MOD04	CCX-BC-SA1	ED2MOD03
214.	4.97E-10	3	ED1MOD04	ED1MOD03	CCX-BC-SA1
215.	4.79E-10	2	CCX-BY-PN1	CCX-BC-SA1	
216.	4.16E-10	3	CCX-BY-PN1	EC2BS211TM	EC2BS212TM
217.	4.16E-10	3	CCX-BY-PN1	EC1BS111TM	EC1BS112TM
218.	4.03E-10	2	ED2BSDS1LF	ZANMOD01	
219.	4.03E-10	2	CCX-IV-XR1	EC2MOD212	
220.	4.03E-10	2	ED1BSDS1LF	ZANMOD01	
221.	4.03E-10	2	CCX-IV-XR1	EC1MOD112	
222.	3.50E-10	3	CCX-IV-XR1	ZO2DG002TM	ED4MOD112
223.	3.50E-10	3	CCX-IV-XR1	ZO2DG002TM	ED4MOD11
224.	3.50E-10	3	ED2MOD03	ED4MOD03	EC2MOD23
225.	3.50E-10	3	CCX-IV-XR1	ZO1DG001TM	ED4MOD112
226.	3.50E-10	3	CCX-IV-XR1	ZO1DG001TM	ED4MOD11
227.	3.50E-10	3	ED1MOD03	ED4MOD03	EC2MOD23
228.	3.34E-10	3	ED2MOD01	EC2CB200RQ	ZO2DG002TM
229.	3.34E-10	3	ED1MOD01	EC1CB100RQ	ZO1DG001TM
230.	3.33E-10	3	ED2MOD01	ZOX-PD-ER	EC0MOD01
231.	3.33E-10	3	ED1MOD01	ZOX-PD-ER	EC0MOD01
232.	3.31E-10	3	CCX-IV-XR1	ZO2DG002TM	ED4BSDS1TM
233.	3.31E-10	3	CCX-IV-XR1	ZO1DG001TM	ED4BSDS1TM
234.	3.20E-10	3	ED2MOD01	ZOX-PD-ES	ED4MOD112
235.	3.20E-10	3	ED2MOD01	ZOX-PD-ES	ED4MOD11
236.	3.20E-10	3	ED1MOD01	ZOX-PD-ES	ED4MOD112
237.	3.20E-10	3	ED1MOD01	ZOX-PD-ES	ED4MOD11
238.	3.02E-10	3	ED2MOD01	ZOX-PD-ES	ED4BSDS1TM
239.	3.02E-10	3	ED1MOD01	ZOX-PD-ES	ED4BSDS1TM
240.	2.93E-10	3	ED2MOD01	ZANTR-2BHF	ZO2MOD01
241.	2.93E-10	3	ED1MOD01	ZANTR-2AHF	ZO1MOD01

Table 57A-4 (Sheet 9 of 10)

DAS-ACT FAULT TREE CUTSETS AFTER SUBTREE REDUCTION

242.	2.74E-10	2	CCX-BY-PN1	EC2BS002LF		
243.	2.74E-10	2	CCX-BY-PN1	ED4BSDS1LF		
244.	2.74E-10	2	CCX-BY-PN1	EC1BS001LF		
245.	2.56E-10	3	ED2MOD01	ZO2MOD03	EC0MOD01	
246.	2.56E-10	3	ED1MOD01	ZO1MOD03	EC0MOD01	
247.	2.44E-10	3	CCX-IV-XR1	ZOX-PD-ES	EC0MOD01	
248.	2.40E-10	3	ED2MOD04	ED2MOD02	CCX-BY-PN1	
249.	2.40E-10	3	ED1MOD04	ED1MOD02	CCX-BY-PN1	
250.	2.30E-10	2	ED2BSDS1LF	EC2MOD21		
251.	2 30E-10	2	ED1BSDS1LF	EC1MOD11		
252.	2.12E-10	3	ED1MOD01	ZANMOD01	DG1-LOGIC	
253.	2.10E-10	3	ED1MOD03	ED4MOD03	ZANTR-2BHF	
254.	2.00E-10	3	ED2MOD01	ZO2MOD04	ED4MOD112	
255.	2.00E-10	3	ED2MOD01	ZO2MOD04	ED4MOD11	
256.	2.00E-10	3	ED1MOD01	ZO1MOD04	ED4MOD112	
257.	2.00E-10	3	ED1MOD01	ZO1MOD04	ED4MOD11	
258.	1.89E-10	3	ED2MOD01	ZO2MOD04	ED4BSDS1TM	
259.	1.89E-10	3	ED1MOD01	ZO1MOD04	ED4BSDS1TM	
260.	1.80E-10	3	ED2MOD02	ED2MOD03	ED2MOD06	
261.	1.80E-10	3	ED1MOD02	ED1MOD03	ED1MOD06	
262.	1.78E-10	3	ED2MOD01	ZANMOD01	EC2CB200VO	
263.	1.78E-10	3	ED1MOD01	ZANMOD01	EC1CB100VO	
264.	1.77E-10	3	ED2MOD01	EC2MOD01	EC0MOD01	
265.	1.77E-10	3	ED1MOD01	EC1MOD01	EC0MOD01	
266.	1.69E-10	4	ED2MOD01	ZO2DG002TM	ED4MOD03	EC2BS023TM
267.	1.69E-10	4	ED1MOD01	ZO1DG001TM	ED4MOD03	EC2BS023TM
268.	1.69E-10	4	ED1MOD01	ZO1DG001TM	ED4MOD03	EC2BS002TM
269.	1.56E-10	3	ED2BSDS1TM	ED4MOD02	ED4MOD03	
270.	1.56E-10	3	ED1BSDS1TM	ED4MOD02	ED4MOD03	
271.	1.54E-10	3	CCX-IV-XR1	ZO2MOD01	ED4MOD112	
272.	1.54E-10	3	CCX-IV-XR1	ZO2MOD01	ED4MOD11	
273.	1.54E-10	3	ED2MOD01	ZOX-BL-ES	EC0MOD01	
274.	1.54E-10	3	CCX-IV-XR1	ZO1MOD01	ED4MOD112	
275.	1.54E-10	3	CCX-IV-XR1	ZO1MOD01	ED4MOD11	
276.	1.54E-10	3	ED1MOD01	ZOX-BL-ES	EC0MOD01	
277.	1.52E-10	3	CCX-IV-XR1	ZO2MOD04	EC0MOD01	
278.	1.52E-10	3	CCX-IV-XR1	ZO1MOD04	EC0MOD01	
279.	1.47E-10	3	ED2MOD01	EC2CB200RQ	ZO2MOD01	
280.	1.47E-10	3	ED1MOD01	EC1CB100RQ	ZO1MOD01	
281.	1.45E-10	3	CCX-IV-XR1	ZO2MOD01	ED4BSDS1TM	
282.	1.45E-10	3	CCX-IV-XR1	ZO1MOD01	ED4BSDS1TM	

Table 57A-4 (Sheet 10 of 10)

DAS-ACT FAULT TREE CUTSETS AFTER SUBTREE REDUCTION

283.	1.38E-10	2	ED2BSDS1LF	ZANTR-2BHF	
284.	1.38E-10	2	ED1BSDS1LF	ZANTR-2AHF	
285.	1.22E-10	3	ED2MOD03	EC2BS211TM	EC2MOD212
286.	1.22E-10	3	ED2MOD03	EC2MOD211	EC2BS212TM
287.	1.22E-10	3	ED1MOD03	EC1BS111TM	EC1MOD112
288.	1.22E-10	3	ED1MOD03	EC1MOD111	EC1BS112TM
289.	1.17E-10	3	ED2MOD01	ECX-CB-GC	ED4MOD112
290.	1.17E-10	3	ED2MOD01	ECX-CB-GC	ED4MOD11
291.	1.17E-10	3	ED1MOD01	ECX-CB-GC	ED4MOD112
292.	1.17E-10	3	ED1MOD01	ECX-CB-GC	ED4MOD11
293.	1.15E-10	2	CCX-IV-XR1	EC2BS002LF	
294.	1.15E-10	2	CCX-IV-XR1	EC1BS001LF	
295.	1.11E-10	3	ED2MOD01	ZO2DG002TM	ED4BSDS1LF
296.	1.11E-10	3	ED1MOD01	ZO1DG001TM	ED4BSDS1LF
297.	1.10E-10	3	ED2MOD01	ECX-CB-GC	ED4BSDS1TM
298.	1.10E-10	3	ED1MOD01	ECX-CB-GC	ED4BSDS1TM
299.	1.05E-10	3	ED1MOD03	ED4MOD03	EC2CB200RQ

SUM OF CUTSET PROBABILITIES = 2.282E-02

CUTOFF PROBABILITY = 1.000E-14

*** WLINK4 Version 1.0 ***
*** 5/31/2002 2:02:26 PM

Table 57A-5 (Sheet 1 of 9)

DAS-ACT FAULT TREE CUTSETS AFTER SUBTREE REDUCTION

junk.wlk file

Only the top 200 dominant cutsets out of 2124 cutsets is shown.

```
VER 1.6
 File created by linking TWOLNK.TMP     WLINK4 ** Ver. 1.0  **
  126   2124  1.852E-07 0.00   1.00E-13
              1  ALL-IND-FAIL          1.0000E-06     0.0000E+00
              2  CA9EPCMPASA           1.7100E-04     0.0000E+00
              3  CABCM00BTM            1.5000E-03     0.0000E+00
              4  CANTP011RI            5.2300E-03     0.0000E+00
              5  CASMOD01              2.4100E-03     0.0000E+00
              6  CASMOD02              2.3100E-02     0.0000E+00
              7  CASPPRUPT             2.0000E-06     0.0000E+00
              8  CAX-CM-ER             1.2000E-04     0.0000E+00
              9  CCAMOD03              6.1400E-04     0.0000E+00
             10  CCBMOD01              4.8000E-02     0.0000E+00
             11  CCX-BY-PN1            5.7000E-05     0.0000E+00
             12  CCX-EAI               1.2700E-05     0.0000E+00
             13  CCX-EAO               3.2300E-06     0.0000E+00
             14  CCX-EP-SA             8.6200E-06     0.0000E+00
             15  CCX-HE-AF             1.2000E-06     0.0000E+00
             16  CCX-IV-XR1            2.4000E-05     0.0000E+00
             17  CCX-PL2MOD5           6.9800E-05     0.0000E+00
             18  CCX-PL2MOD5-SW        1.1000E-05     0.0000E+00
             19  CCX-PL3MOD5           6.9800E-05     0.0000E+00
             20  CCX-PL3MOD5-SW        1.1000E-05     0.0000E+00
             21  CCX-PL903             9.6900E-05     0.0000E+00
             22  CCX-PL9MOD1           1.4100E-04     0.0000E+00
             23  CCX-PL9MOD1-SW        1.1000E-05     0.0000E+00
             24  CCX-PLMOD3            1.0300E-04     0.0000E+00
             25  CCX-PLMOD3-SW         1.1000E-05     0.0000E+00
             26  CCX-PLSMOD6           2.5300E-04     0.0000E+00
             27  CCX-PLSMOD6-SW        1.1000E-05     0.0000E+00
             28  CCX-PM-ER             1.4000E-05     0.0000E+00
             29  CCX-SFTW              1.2000E-06     0.0000E+00
             30  CCX-TRNSM             4.7800E-04     0.0000E+00
             31  CCX-TT-UF             1.1700E-04     0.0000E+00
             32  CCX-XMTR              4.7800E-04     0.0000E+00
```

Table 57A-5 (Sheet 2 of 9)

DAS-ACT FAULT TREE CUTSETS AFTER SUBTREE REDUCTION

33	CDNTF01BRI	5.2300E-03	0.0000E+00
34	CMX-VS-FA	3.8400E-05	0.0000E+00
35	CONDVACUUM	1.0000E-03	0.0000E+00
36	DAS	1.0000E-02	0.0000E+00
37	EC0MOD01	5.0800E-03	0.0000E+00
38	EC1BS001LF	4.8000E-06	0.0000E+00
39	EC1BS001TM	2.7000E-03	0.0000E+00
40	EC1BS011TM	2.7000E-03	0.0000E+00
41	EC1BS012TM	2.7000E-03	0.0000E+00
42	EC1BS112TM	2.7000E-03	0.0000E+00
43	EC1CB100VO	4.2000E-03	0.0000E+00
44	EC1MOD11	4.8000E-05	0.0000E+00
45	EC1MOD12	4.8000E-05	0.0000E+00
46	EC2BS002TM	2.7000E-03	0.0000E+00
47	EC2BS021TM	2.7000E-03	0.0000E+00
48	EC2BS022TM	2.7000E-03	0.0000E+00
49	EC2BS212TM	2.7000E-03	0.0000E+00
50	EC2BS222TM	2.7000E-03	0.0000E+00
51	ECX-CB-GC	7.3000E-04	0.0000E+00
52	ECX-CB-GO	4.2000E-04	0.0000E+00
53	ED1BSDS1LF	4.8000E-06	0.0000E+00
54	ED1BSDS1TM	3.0000E-04	0.0000E+00
55	ED1MOD01	5.0400E-04	0.0000E+00
56	ED1MOD03	2.7000E-03	0.0000E+00
57	ED1MOD04	2.1900E-02	0.0000E+00
58	ED1MOD07	3.0500E-04	0.0000E+00
59	ED1MOD11	3.1700E-04	0.0000E+00
60	ED1MOD111	3.1700E-04	0.0000E+00
61	ED1MOD14	3.1700E-04	0.0000E+00
62	ED2BSDS1LF	4.8000E-06	0.0000E+00
63	ED2BSDS1TM	3.0000E-04	0.0000E+00
64	ED2MOD01	5.0400E-04	0.0000E+00
65	ED2MOD03	2.7000E-03	0.0000E+00
66	ED2MOD04	2.1900E-02	0.0000E+00
67	ED2MOD07	3.0500E-04	0.0000E+00
68	ED2MOD14	3.1700E-04	0.0000E+00
69	ED3BSDS1TM	3.0000E-04	0.0000E+00
70	ED3MOD01	5.0400E-04	0.0000E+00
71	ED3MOD03	2.7000E-03	0.0000E+00
72	ED3MOD04	2.1900E-02	0.0000E+00
73	ED3MOD07	3.0500E-04	0.0000E+00

Table 57A-5 (Sheet 3 of 9)

DAS-ACT FAULT TREE CUTSETS AFTER SUBTREE REDUCTION

74	ED4BSDS1TM	3.0000E-04	0.0000E+00
75	ED4MOD11	3.1700E-04	0.0000E+00
76	ED4MOD112	3.1700E-04	0.0000E+00
77	FWMOD013A	1.4100E-02	0.0000E+00
78	FWMOD013B	1.4100E-02	0.0000E+00
79	FWMOD03A	1.7000E-02	0.0000E+00
80	FWMOD03B	1.7000E-02	0.0000E+00
81	FWX-MV2-GO	5.5000E-04	0.0000E+00
82	FWX-PM2-FS	5.4000E-04	0.0000E+00
83	IWNTK001AF	2.4000E-06	0.0000E+00
84	MDAS	1.0000E-02	0.0000E+00
85	PCNHR001ML	2.4000E-06	0.0000E+00
86	PL2MOD51	8.7400E-04	0.0000E+00
87	PL2MOD52	8.7400E-04	0.0000E+00
88	PL3MOD51	8.7400E-04	0.0000E+00
89	PL90301ASA	1.1600E-03	0.0000E+00
90	PL90301BSA	1.1600E-03	0.0000E+00
91	PL90302ASA	1.1600E-03	0.0000E+00
92	PL90302BSA	1.1600E-03	0.0000E+00
93	PL9MOD11	2.0900E-03	0.0000E+00
94	PL9MOD12	2.0900E-03	0.0000E+00
95	PLA0302ASA	1.1600E-03	0.0000E+00
96	PLA0302BSA	1.1600E-03	0.0000E+00
97	PLAMOD12	2.0900E-03	0.0000E+00
98	PLSMOD61	3.4600E-03	0.0000E+00
99	PLSMOD62	3.4600E-03	0.0000E+00
100	PMAMOD31	5.0200E-03	0.0000E+00
101	PMBMOD32	5.0200E-03	0.0000E+00
102	PRAAV108LA	1.0900E-03	0.0000E+00
103	PRAAV108TM	5.0000E-04	0.0000E+00
104	PRAAV130LA	1.0900E-03	0.0000E+00
105	PRAAV130TM	5.0000E-04	0.0000E+00
106	PRBAV108LA	1.0900E-03	0.0000E+00
107	PRBAV108TM	5.0000E-04	0.0000E+00
108	PRBAV130LA	1.0900E-03	0.0000E+00
109	PRBAV130TM	5.0000E-04	0.0000E+00
110	PXX-AV-LA	9.6000E-05	0.0000E+00
111	PXX-AV-LA1	9.6000E-05	0.0000E+00
112	REC-MANDAS	1.1600E-02	0.0000E+00
113	SWAMOD03	6.3400E-04	0.0000E+00
114	SWAMOD09T	2.5200E-04	0.0000E+00

Table 57A-5 (Sheet 4 of 9)

DAS-ACT FAULT TREE CUTSETS AFTER SUBTREE REDUCTION

115	SWB-001TM	3.8000E-02	0.0000E+00
116	SWX-PM-ER	1.4000E-05	0.0000E+00
117	ZANMOD01	8.4000E-05	0.0000E+00
118	ZANTR-2AHF	2.8800E-05	0.0000E+00
119	ZO1DG001TM	4.6000E-02	0.0000E+00
120	ZO1MOD01	2.0200E-02	0.0000E+00
121	ZO1MOD04	1.2500E-03	0.0000E+00
122	ZO2DG002TM	4.6000E-02	0.0000E+00
123	ZO2MOD01	2.0200E-02	0.0000E+00
124	ZOX-DG-DR	4.4000E-04	0.0000E+00
125	ZOX-DG-DS	2.8000E-04	0.0000E+00
126	ZOX-PD-ES	2.0000E-03	0.0000E+00

1.	5.54E-08	3	CCX-TRNSM	DAS	REC-MANDAS
2.	4.78E-08	3	CCX-TRNSM	DAS	MDAS
3.	5.82E-09	3	CANTP011RI	PXX-AV-LA1	REC-MANDAS
4.	5.82E-09	3	CANTP011RI	PXX-AV-LA	REC-MANDAS
5.	5.02E-09	3	CANTP011RI	PXX-AV-LA1	MDAS
6.	5.02E-09	3	CANTP011RI	PXX-AV-LA	MDAS
7.	3.01E-09	3	EC1BS001TM	PXX-AV-LA1	REC-MANDAS
8.	3.01E-09	3	EC1BS001TM	PXX-AV-LA	REC-MANDAS
9.	3.01E-09	3	EC1BS012TM	PXX-AV-LA1	REC-MANDAS
10.	3.01E-09	3	EC1BS012TM	PXX-AV-LA	REC-MANDAS
11.	2.59E-09	3	EC1BS001TM	PXX-AV-LA1	MDAS
12.	2.59E-09	3	EC1BS001TM	PXX-AV-LA	MDAS
13.	2.59E-09	3	EC1BS012TM	PXX-AV-LA1	MDAS
14.	2.59E-09	3	EC1BS012TM	PXX-AV-LA	MDAS
15.	1.69E-09	3	CCX-TRNSM	ED3MOD07	REC-MANDAS
16.	1.46E-09	3	CCX-TRNSM	ED3MOD07	MDAS
17.	1.32E-09	3	EC0MOD01	ED2MOD03	PXX-AV-LA1
18.	1.32E-09	3	EC0MOD01	ED2MOD03	PXX-AV-LA
19.	1.32E-09	3	EC0MOD01	ED1MOD03	PXX-AV-LA1
20.	1.32E-09	3	EC0MOD01	ED1MOD03	PXX-AV-LA
21.	7.00E-10	3	EC1BS001TM	PXX-AV-LA1	ED1MOD03
22.	7.00E-10	3	EC1BS001TM	PXX-AV-LA	ED1MOD03
23.	7.00E-10	3	ED2MOD03	EC2BS002TM	PXX-AV-LA1
24.	7.00E-10	3	ED2MOD03	EC2BS002TM	PXX-AV-LA
25.	7.00E-10	3	ED2MOD03	EC2BS021TM	PXX-AV-LA1
26.	7.00E-10	3	ED2MOD03	EC2BS021TM	PXX-AV-LA
27.	6.49E-10	3	CCX-TRNSM	CCX-TT-UF	REC-MANDAS
28.	6.49E-10	3	CCX-TT-UF	CCX-XMTR	REC-MANDAS
29.	5.59E-10	3	CCX-TRNSM	CCX-TT-UF	MDAS

Table 57A-5 (Sheet 5 of 9)

DAS-ACT FAULT TREE CUTSETS AFTER SUBTREE REDUCTION

30.	5.59E-10	3	CCX-TT-UF	CCX-XMTR	MDAS	
31.	5.32E-10	3	CCX-TRNSM	PXX-AV-LA1	REC-MANDAS	
32.	5.32E-10	3	CCX-TRNSM	PXX-AV-LA	REC-MANDAS	
33.	4.59E-10	3	CCX-TRNSM	PXX-AV-LA1	MDAS	
34.	4.59E-10	3	CCX-TRNSM	PXX-AV-LA	MDAS	
35.	2.90E-10	4	CANTP011RI	DAS	REC-MANDAS	CCX-XMTR
36.	2.90E-10	4	CDNTF01BRI	CCX-XMTR	DAS	REC-MANDAS
37.	2.82E-10	3	CCX-PLSMOD6	PXX-AV-LA1	REC-MANDAS	
38.	2.82E-10	3	CCX-PLSMOD6	PXX-AV-LA	REC-MANDAS	
39.	2.82E-10	4	EC0MOD01	CCX-XMTR	DAS	REC-MANDAS
40.	2.81E-10	3	SWAMOD09T	PXX-AV-LA1	REC-MANDAS	
41.	2.81E-10	3	SWAMOD09T	PXX-AV-LA	REC-MANDAS	
42.	2.60E-10	4	EC0MOD01	ZO1DG001TM	PXX-AV-LA1	REC-MANDAS
43.	2.60E-10	4	EC0MOD01	ZO1DG001TM	PXX-AV-LA	REC-MANDAS
44.	2.50E-10	4	CANTP011RI	DAS	MDAS	CCX-XMTR
45.	2.50E-10	4	CDNTF01BRI	CCX-XMTR	DAS	MDAS
46.	2.43E-10	3	CCX-PLSMOD6	PXX-AV-LA1	MDAS	
47.	2.43E-10	3	CCX-PLSMOD6	PXX-AV-LA	MDAS	
48.	2.43E-10	4	EC0MOD01	CCX-XMTR	DAS	MDAS
49.	2.42E-10	3	SWAMOD09T	PXX-AV-LA1	MDAS	
50.	2.42E-10	3	SWAMOD09T	PXX-AV-LA	MDAS	
51.	2.24E-10	4	EC0MOD01	ZO1DG001TM	PXX-AV-LA1	MDAS
52.	2.24E-10	4	EC0MOD01	ZO1DG001TM	PXX-AV-LA	MDAS
53.	1.59E-10	3	CANTP011RI	PXX-AV-LA1	ED2MOD14	
54.	1.59E-10	3	CANTP011RI	PXX-AV-LA1	ED1MOD14	
55.	1.59E-10	3	CANTP011RI	PXX-AV-LA	ED2MOD14	
56.	1.59E-10	3	CANTP011RI	PXX-AV-LA	ED1MOD14	
57	1.57E-10	3	CCX-PL9MOD1	PXX-AV-LA1	REC-MANDAS	
58.	1.57E-10	3	CCX-PL9MOD1	PXX-AV-LA	REC-MANDAS	
59.	1.53E-10	3	CANTP011RI	PXX-AV-LA1	ED2MOD07	
60.	1.53E-10	3	CANTP011RI	PXX-AV-LA1	ED1MOD07	
61.	1.53E-10	3	CANTP011RI	PXX-AV-LA	ED2MOD07	
62.	1.53E-10	3	CANTP011RI	PXX-AV-LA	ED1MOD07	
63.	1.50E-10	4	EC1BS001TM	DAS	REC-MANDAS	CCX-XMTR
64.	1.50E-10	4	EC1BS012TM	DAS	REC-MANDAS	CCX-XMTR
65.	1.46E-10	3	EC0MOD01	ED2BSDS1TM	PXX-AV-LA1	
66.	1.46E-10	3	EC0MOD01	ED2BSDS1TM	PXX-AV-LA	
67.	1.46E-10	3	EC0MOD01	ED1BSDS1TM	PXX-AV-LA1	
68.	1.46E-10	3	EC0MOD01	ED1BSDS1TM	PXX-AV-LA	
69.	1.46E-10	3	CANTP011RI	PCNHR001ML	REC-MANDAS	
70.	1.46E-10	3	CANTP011RI	IWNTK001AF	REC-MANDAS	

Table 57A-5 (Sheet 6 of 9)

DAS-ACT FAULT TREE CUTSETS AFTER SUBTREE REDUCTION

71.	1.39E-10	3	CCX-SFTW	DAS	REC-MANDAS	
72.	1.38E-10	3	EC0MOD01	CCX-XMTR	CCX-BY-PN1	
73.	1.38E-10	3	EC0MOD01	CCX-BY-PN1	CCX-TRNSM	
74.	1.35E-10	3	CCX-PL9MOD1	PXX-AV-LA1	MDAS	
75.	1.35E-10	3	CCX-PL9MOD1	PXX-AV-LA	MDAS	
76.	1.34E-10	3	CAX-CM-ER	PXX-AV-LA1	REC-MANDAS	
77.	1.34E-10	3	CAX-CM-ER	PXX-AV-LA	REC-MANDAS	
78.	1.31E-10	3	EC1BS001TM	PXX-AV-LA1	ED1MOD01	
79.	1.31E-10	3	EC1BS001TM	PXX-AV-LA	ED1MOD01	
80.	1.31E-10	3	ED2MOD01	EC2BS002TM	PXX-AV-LA1	
81.	1.31E-10	3	ED2MOD01	EC2BS002TM	PXX-AV-LA	
82.	1.31E-10	3	ED2MOD01	EC2BS021TM	PXX-AV-LA1	
83.	1.31E-10	3	ED2MOD01	EC2BS021TM	PXX-AV-LA	
84.	1.31E-10	3	ED2MOD01	EC2BS212TM	PXX-AV-LA1	
85.	1.31E-10	3	ED2MOD01	EC2BS212TM	PXX-AV-LA	
86.	1.29E-10	4	EC1BS001TM	DAS	MDAS	CCX-XMTR
87.	1.29E-10	4	EC1BS012TM	DAS	MDAS	CCX-XMTR
88.	1.26E-10	3	CANTP011RI	PCNHR001ML	MDAS	
89.	1.26E-10	3	CANTP011RI	IWNTK001AF	MDAS	
90.	1.20E-10	3	CCX-SFTW	DAS	MDAS	
91.	1.15E-10	3	CAX-CM-ER	PXX-AV-LA1	MDAS	
92.	1.15E-10	3	CAX-CM-ER	PXX-AV-LA	MDAS	
93.	1.15E-10	3	CCX-PLMOD3	PXX-AV-LA1	REC-MANDAS	
94.	1.15E-10	3	CCX-PLMOD3	PXX-AV-LA	REC-MANDAS	
95.	1.14E-10	4	EC0MOD01	ZO1MOD01	PXX-AV-LA1	REC-MANDAS
96.	1.14E-10	4	EC0MOD01	ZO1MOD01	PXX-AV-LA	REC-MANDAS
97.	1.08E-10	3	CCX-PL903	PXX-AV-LA1	REC-MANDAS	
98.	1.08E-10	3	CCX-PL903	PXX-AV-LA	REC-MANDAS	
99.	9.89E-11	3	CCX-PLMOD3	PXX-AV-LA1	MDAS	
100.	9.89E-11	3	CCX-PLMOD3	PXX-AV-LA	MDAS	
101.	9.85E-11	4	EC0MOD01	ZO1MOD01	PXX-AV-LA1	MDAS
102.	9.85E-11	4	EC0MOD01	ZO1MOD01	PXX-AV-LA	MDAS
103.	9.30E-11	3	CCX-PL903	PXX-AV-LA1	MDAS	
104.	9.30E-11	3	CCX-PL903	PXX-AV-LA	MDAS	
105.	8.22E-11	3	EC1BS001TM	PXX-AV-LA1	ED2MOD14	
106.	8.22E-11	3	EC1BS001TM	PXX-AV-LA1	ED1MOD14	
107.	8.22E-11	3	EC1BS001TM	PXX-AV-LA	ED2MOD14	
108.	8.22E-11	3	EC1BS001TM	PXX-AV-LA	ED1MOD14	
109.	8.22E-11	3	EC1BS012TM	PXX-AV-LA1	ED2MOD14	
110.	8.22E-11	3	EC1BS012TM	PXX-AV-LA1	ED1MOD14	
111.	8.22E-11	3	EC1BS012TM	PXX-AV-LA	ED2MOD14	

Table 57A-5 (Sheet 7 of 9)

DAS-ACT FAULT TREE CUTSETS AFTER SUBTREE REDUCTION

112.	8.22E-11	3	EC1BS012TM	PXX-AV-LA	ED1MOD14	
113.	7.91E-11	3	EC1BS001TM	PXX-AV-LA1	ED2MOD07	
114.	7.91E-11	3	EC1BS001TM	PXX-AV-LA1	ED1MOD07	
115.	7.91E-11	3	EC1BS001TM	PXX-AV-LA	ED2MOD07	
116.	7.91E-11	3	EC1BS001TM	PXX-AV-LA	ED1MOD07	
117.	7.91E-11	3	EC1BS012TM	PXX-AV-LA1	ED2MOD07	
118.	7.91E-11	3	EC1BS012TM	PXX-AV-LA1	ED1MOD07	
119.	7.91E-11	3	EC1BS012TM	PXX-AV-LA	ED2MOD07	
120.	7.91E-11	3	EC1BS012TM	PXX-AV-LA	ED1MOD07	
121.	7.78E-11	3	EC1BS001TM	PXX-AV-LA1	ED1BSDS1TM	
122.	7.78E-11	3	EC1BS001TM	PXX-AV-LA	ED1BSDS1TM	
123.	7.77E-11	3	CCX-PL2MOD5	PXX-AV-LA1	REC-MANDAS	
124.	7.77E-11	3	CCX-PL2MOD5	PXX-AV-LA	REC-MANDAS	
125.	7.77E-11	3	CCX-PL3MOD5	PXX-AV-LA1	REC-MANDAS	
126.	7.77E-11	3	CCX-PL3MOD5	PXX-AV-LA	REC-MANDAS	
127.	7.52E-11	3	EC1BS001TM	PCNHR001ML	REC-MANDAS	
128.	7.52E-11	3	EC1BS001TM	IWNTK001AF	REC-MANDAS	
129.	7.52E-11	3	EC1BS012TM	PCNHR001ML	REC-MANDAS	
130.	7.52E-11	3	EC1BS012TM	IWNTK001AF	REC-MANDAS	
131.	7.21E-11	4	CANTP011RI	PRAAV130LA	PRBAV130LA	REC-MANDAS
132.	7.21E-11	4	CANTP011RI	PRAAV108LA	PRBAV108LA	REC-MANDAS
133.	6.95E-11	4	CASMOD02	EC1BS011TM	PXX-AV-LA1	REC-MANDAS
134.	6.95E-11	4	CASMOD02	EC1BS011TM	PXX-AV-LA	REC-MANDAS
135.	6.70E-11	3	CCX-PL2MOD5	PXX-AV-LA1	MDAS	
136.	6.70E-11	3	CCX-PL2MOD5	PXX-AV-LA	MDAS	
137.	6.70E-11	3	CCX-PL3MOD5	PXX-AV-LA1	MDAS	
138.	6.70E-11	3	CCX-PL3MOD5	PXX-AV-LA	MDAS	
139.	6.48E-11	3	EC1BS001TM	PCNHR001ML	MDAS	
140.	6.48E-11	3	EC1BS001TM	IWNTK001AF	MDAS	
141.	6.48E-11	3	EC1BS012TM	PCNHR001ML	MDAS	
142.	6.48E-11	3	EC1BS012TM	IWNTK001AF	MDAS	
143.	6.21E-11	4	CANTP011RI	PRAAV130LA	PRBAV130LA	MDAS
144.	6.21E-11	4	CANTP011RI	PRAAV108LA	PRBAV108LA	MDAS
145.	6.20E-11	4	CASMOD01	CASMOD02	PXX-AV-LA1	REC-MANDAS
146.	6.20E-11	4	CASMOD01	CASMOD02	PXX-AV-LA	REC-MANDAS
147.	6.12E-11	4	CCX-TRNSM	ED3MOD01	ED3MOD04	REC-MANDAS
148.	5.99E-11	4	CASMOD02	EC1BS011TM	PXX-AV-LA1	MDAS
149.	5.99E-11	4	CASMOD02	EC1BS011TM	PXX-AV-LA	MDAS
150.	5.35E-11	3	EC1MOD12	PXX-AV-LA1	REC-MANDAS	
151.	5.35E-11	3	EC1MOD12	PXX-AV-LA	REC-MANDAS	
152.	5.34E-11	4	CASMOD01	CASMOD02	PXX-AV-LA1	MDAS

Table 57A-5 (Sheet 8 of 9)

DAS-ACT FAULT TREE CUTSETS AFTER SUBTREE REDUCTION

153.	5.34E-11	4	CASMOD01	CASMOD02	PXX-AV-LA	MDAS
154.	5.28E-11	4	CCX-TRNSM	ED3MOD01	ED3MOD04	MDAS
155.	4.62E-11	3	CCX-TRNSM	ED3MOD07	ED2MOD14	
156.	4.62E-11	3	CCX-TRNSM	ED3MOD07	ED1MOD14	
157.	4.61E-11	3	EC1MOD12	PXX-AV-LA1	MDAS	
158.	4.61E-11	3	EC1MOD12	PXX-AV-LA	MDAS	
159.	4.45E-11	3	CCX-TRNSM	ED3MOD07	ED2MOD07	
160.	4.45E-11	3	CCX-TRNSM	ED3MOD07	ED1MOD07	
161.	4.04E-11	4	EC1BS001TM	CCX-XMTR	ED3MOD03	REC-MANDAS
162.	4.04E-11	4	EC1BS001TM	CCX-TRNSM	ED3MOD03	REC-MANDAS
163.	4.04E-11	4	CCX-TRNSM	ED3MOD03	EC1BS011TM	REC-MANDAS
164.	4.04E-11	4	ED3MOD03	EC1BS011TM	CCX-XMTR	REC-MANDAS
165.	3.72E-11	4	EC1BS001TM	PRAAV130LA	PRBAV130LA	REC-MANDAS
166.	3.72E-11	4	EC1BS001TM	PRAAV108LA	PRBAV108LA	REC-MANDAS
167.	3.72E-11	4	EC1BS012TM	PRAAV130LA	PRBAV130LA	REC-MANDAS
168.	3.72E-11	4	EC1BS012TM	PRAAV108LA	PRBAV108LA	REC-MANDAS
169.	3.64E-11	4	CCX-TRNSM	ED3MOD04	ED3BSDS1TM	REC-MANDAS
170.	3.48E-11	4	EC1BS001TM	CCX-XMTR	ED3MOD03	MDAS
171.	3.48E-11	4	EC1BS001TM	CCX-TRNSM	ED3MOD03	MDAS
172.	3.48E-11	4	CCX-TRNSM	ED3MOD03	EC1BS011TM	MDAS
173.	3.48E-11	4	ED3MOD03	EC1BS011TM	CCX-XMTR	MDAS
174.	3.42E-11	4	CCX-TT-UF	PMAMOD31	PMBMOD32	REC-MANDAS
175.	3.31E-11	4	CANTP011RI	PRAAV130TM	PRBAV130LA	REC-MANDAS
176.	3.31E-11	4	CANTP011RI	PRAAV130LA	PRBAV130TM	REC-MANDAS
177.	3.31E-11	4	CANTP011RI	PRAAV108TM	PRBAV108LA	REC-MANDAS
178.	3.31E-11	4	CANTP011RI	PRAAV108LA	PRBAV108TM	REC-MANDAS
179.	3.28E-11	4	CCAMOD03	CCBMOD01	PXX-AV-LA1	REC-MANDAS
180.	3.28E-11	4	CCAMOD03	CCBMOD01	PXX-AV-LA	REC-MANDAS
181.	3.21E-11	4	EC1BS001TM	PRAAV130LA	PRBAV130LA	MDAS
182.	3.21E-11	4	EC1BS001TM	PRAAV108LA	PRBAV108LA	MDAS
183.	3.21E-11	4	EC1BS012TM	PRAAV130LA	PRBAV130LA	MDAS
184.	3.21E-11	4	EC1BS012TM	PRAAV108LA	PRBAV108LA	MDAS
185.	3.14E-11	4	CCX-TRNSM	ED3MOD04	ED3BSDS1TM	MDAS
186.	2.95E-11	4	CCX-TT-UF	PMAMOD31	PMBMOD32	MDAS
187.	2.85E-11	4	CANTP011RI	PRAAV130TM	PRBAV130LA	MDAS
188.	2.85E-11	4	CANTP011RI	PRAAV130LA	PRBAV130TM	MDAS
189.	2.85E-11	4	CANTP011RI	PRAAV108TM	PRBAV108LA	MDAS
190.	2.85E-11	4	CANTP011RI	PRAAV108LA	PRBAV108TM	MDAS
191.	2.83E-11	4	CCAMOD03	CCBMOD01	PXX-AV-LA1	MDAS
192.	2.83E-11	4	CCAMOD03	CCBMOD01	PXX-AV-LA	MDAS
193.	2.68E-11	4	SWAMOD03	SWB-001TM	PXX-AV-LA1	REC-MANDAS

Table 57A-5 (Sheet 9 of 9)

DAS-ACT FAULT TREE CUTSETS AFTER SUBTREE REDUCTION

194.	2.68E-11	4	SWAMOD03	SWB-001TM	PXX-AV-LA	REC-MANDAS
195.	2.38E-11	4	EC0MOD01	EC1CB100VO	PXX-AV-LA1	REC-MANDAS
196.	2.38E-11	4	EC0MOD01	EC1CB100VO	PXX-AV-LA	REC-MANDAS
197.	2.31E-11	4	SWAMOD03	SWB-001TM	PXX-AV-LA1	MDAS
198.	2.31E-11	4	SWAMOD03	SWB-001TM	PXX-AV-LA	MDAS
199.	2.05E-11	4	EC0MOD01	EC1CB100VO	PXX-AV-LA1	MDAS
200.	2.05E-11	4	EC0MOD01	EC1CB100VO	PXX-AV-LA	MDAS

SUM OF CUTSET PROBABILITIES = 1.852E-07

CUTOFF PROBABILITY = 1.000E-13

*** WLINK4 Version 1.0 ***
*** 5/31/2002 2:54:15 PM

Table 57A-6 (Sheet 1 of 3)

AP1000 FIRE PRA SCENARIO CCDPs FOR OVER-CONSERVATIVE CASES

Scenario #	IEV		ADS/PMS (auto + manual)	ADS/DAS (manual)	RNS (depends on A and B)	Comments	CCDP Using AP1000R2 CDF Results (0)	Revised CCDP
3C	SPADS	DIV A failed	2/3 ADMA (auto only)	not credited for SPADS	not credited for SPADS	ID* basic events are ANDED with EC* basic events. It is not sufficient to fail ID*; must somehow fail the AND gate (preferably without failing the EC*).	1.25E-03	
3B		DIV B failed	2/3 (auto only)	not credited for SPADS			1.25E-03	
25		DIV C failed	2/3 (auto only)	not credited for SPADS			1.25E-03	
3D		DIV D failed	2/3 (auto only)	not credited for SPADS			1.25E-03	
12	SPADS	2 DIVs failed A&C	2/2 (auto only)	not credited for SPADS		(3)	1.00E+00	1.6E-03
12a		2 DIVs failed B&D	2/2 (auto only)	not credited for SPADS		(3)	1.00E+00	1.6E-03
20C	MLOCA	DIV A failed	3/4 ADM/ADQ	yes	RNR fails (2)		2.23E-04	8.07E-04
20		DIV B failed	3/4	yes	fails		1.12E-03	8.07E-04

Table 57A-6 (Sheet 2 of 3)

AP1000 FIRE PRA SCENARIO CCDPs FOR OVER-CONSERVATIVE CASES

Scenario #	IEV		ADS/PMS (auto + manual)	ADS/DAS (manual)	RNS (depends on A and B)	Comments	CCDP Using AP1000R2 CDF Results (0)	Revised CCDP
20A		DIV C failed	3/4	yes	OK		8.37E-05	8.07E-04
20B		DIV D failed	3/4	yes	OK		9.79E-04	8.07E-04
9b	MLOCA	2 DIVs failed A&C	3/4	yes	fails	If DAS fails, CDF occurs. Calculate DAS failure. (4)	1.00E+00	2.28E-03
9a		2 DIVs failed B&D	3/4	yes	fails	If DAS fails, CDF occurs. Calculate DAS failure. (4)	1.00E+00	2.28E-03
14	TRANS	DIV A failed	3/4 ADA/ADT	yes	RNR fails		2.70E-09	
14B		DIV B failed	¾	yes	fails		7.23E-08	
16		DIV C failed	¾	yes	OK		2.70E-09	
14A		DIV D failed	¾	yes	OK		7.47E-08	
11	TRANS	2 DIVs failed A&C	¾	yes	fails	If XSTW and DAS fail, CDF occurs. See also looping into consequential events. (1), (4)	1.01E--06	2.7E-06

Table 57A-6 (Sheet 3 of 3)

AP1000 FIRE PRA SCENARIO CCDPs FOR OVER-CONSERVATIVE CASES

Scenario #	IEV		ADS/PMS (auto + manual)	ADS/DAS (manual)	RNS (depends on A and B)	Comments	CCDP Using AP1000R2 CDF Results (0)	Revised CCDP
11a		2 DIVs failed B&D	¾	yes	fails	(1), (4)	1.13E-04	2.7E-06
10		four divisions failed	3/4				1.13E-04	2.7E-06
included in TRANS	TRANS	CMLOCA	same as MLOCA	yes		OTH-PRSOV = 0.01 goes to CMLOCA. CCDP should be the same as MLOCA CCDP * 0.01*PRHR fails		5.7E-08
included in TRANS		CSGTR	ADS	yes		OTH-SLSOV * OTH-SGTR = 0.011 * 0.01 = 1.1E-04 goes to CSGTR. Again DAS is needed to actuate ¾ ADS 4th Stage valves to avoid CDF.		3.10E-06
included in TRANS		CSLB-V	ADT	yes		OTH-SLSOV, 0.011 goes to CSLB-V. Not evaluated yet.		small

Notes for Table 57A-6:

(0) CCDP scenarios are quantified by using CMQ.OUT from AP1000R2. Scenario 11A CCDP of 1.13E-04 is driven by CMLOCA (OTH-SLSOV times OTH-SGTR = 1.1E-04) with no success possible since ADS fails in the un-fixed I&C model. DAS fix should reduce it.

(1) CALC-5

q10 =q(XSTW fails) = FWT * SFWT * PRT failure = 3.06E-06.

(2) RNS V11 DIV-A
RNS V22 DIV-A
RNS V23 DIV-B

(3) CALC-1

IEV-SPADS with 2 DIVs failed; one failed division opens one ADS Stage 4 path due to hot shorts (causing the SPADS event). Any one of the remaining two divisions failing causes CDF:

CCDP >= q2 = 2*q1 = 8.0E-4 * 2 = 1.6E-03

where:

q1 = 7.7E-04 (from 41ALA, 1 train ADS Stage 4 failure)

(4) CALC-3 and CALC-4

First fix DAS power subs in 41AL. This is done as a standalone FT named DAS-ACT (located in H:\fire\ ads act.dat and .txt.) Then quantify DAS-ACT only and together with XSTW. Done in the same directory. The results are:

q8 = Q(das-act) = 2.82E-02.
Q(XSWT) = 3.06E-06
q9 = Q(das-act * xswt) = 1.85E-07 (Boolean product; stored in junk.wlk. See Table 57A-5 for the cutsets)

(5) There are major modeling assumptions for calculation of CCDP:

1. In scenarios that affect reactor trip switchgear, etc., do not consider potential risk increase in ATWS, since either the failures would actually cause a trip (by losing power in two buses) or the operators would manually trip the reactor.
2. Use AP1000R2 plant CDF model results to estimate fire scenario CCDPs. If a CCDP estimate appears to be overly conservative for a given scenario, identify the conservatism and fix the CCDP.

6) CALC-2

CCDP TRANS with two divisions failed = q3:

q3 = CDP TRANS-ONLY + 0.01 * PRHR fails * CMLOCA + 1.1E-04 * CSGTR + 0.011 * CSLB
q3 = q4 + q5 + q6 +q7
q4 = q(das-act * swt) = 1.85E-07 (from (4))
q5 = 0.01 * 2.03E-04 * 2.82E-02 = 5.7E-08
q6 = 1.1E-04 * 2.82E-02 = 3.102E-06
q7 = smaller than q4 = epsilon
q3 = 1.85E-07 + 5.7E-04 + 3.10E-06 + epsilon = 3.3E-04.

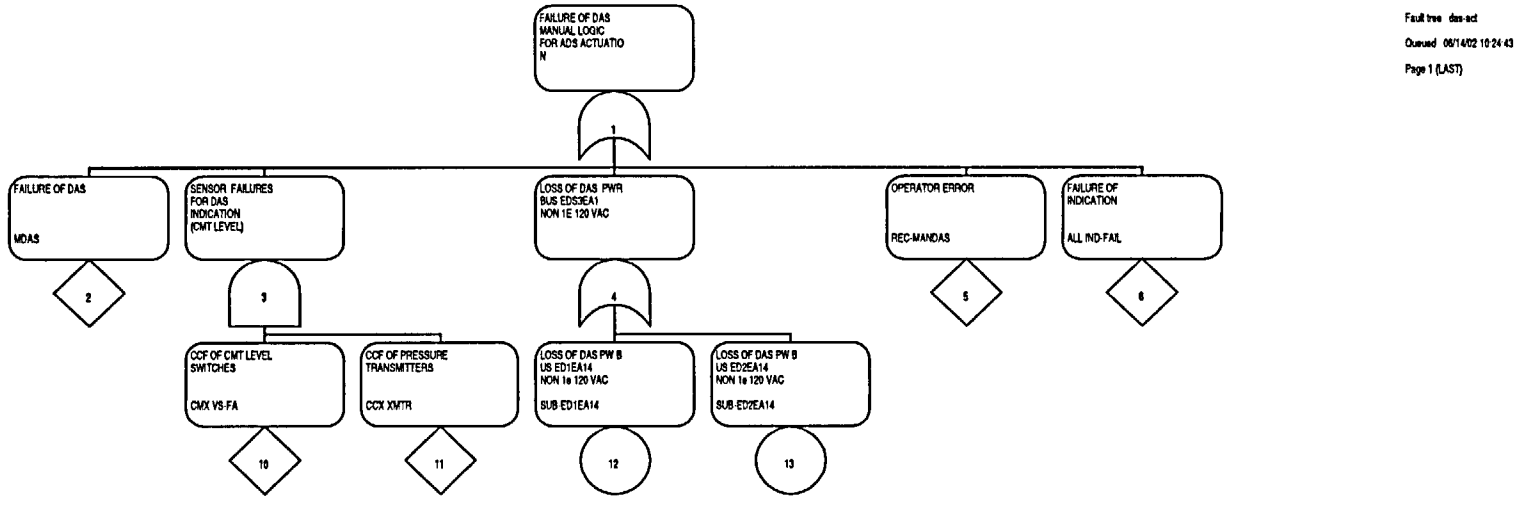

Figure 57A-1

DAS-ACT Fault Tree

ATTACHMENT 57B

MODELING OF OPERATOR ACTIONS IN FIRE SCENARIOS

In the AP1000 PRA internal fire analysis for events at power scenarios, operator actions are credited or affected for a few cases. This attachment discusses these operator actions and provides their failure probabilities.

OPA-01 = Operator deactivates the protection and safety monitoring system (PMS) division involved in the fire.

OPA-02 = Operator opens the manual valve to sprinklers in containment.

This attachment also discusses remote shutdown panel actions and credit for manual actuation of ADS by DAS.

57B.1 Calculation of Failure Probability of OPA-01

This section describes the operator action to diagnose a fire in a PMS division fire area and deactivate the PMS division involved in the fire, before two cabinets and their cable trays are involved in the fire. The operator deactivates the PMS division by removing power from all equipment in the affected division by switches in the affected IDS division. The main reason for this operator action is to prevent potential hot shorts in two cabinets/cable trays that may spuriously activate an ADS line. The action also renders the IDS division inoperable.

During normal plant operation at power, a fire event is postulated to occur in a fire area containing either division A, B, C, or D of PMS. These fire areas are labeled as 1202AF04, 1201AF02, 1201AF03, and 1202AF03. These fire areas contain multiple cabinets and their cable trays. Moreover, they contain multiple fire zones located at different floors. The bulk of the combustibles in such a fire area are due to the cabinets and the cable trays. There are no other main sources of combustibles. Thus, a most likely location of a fire is at one cabinet or a cable tray. A hot short in a single cabinet or cable tray is not capable of creating a spurious ADS actuation signal due to engineered design features; another coincidental hot short in a different (for example, adjacent) cabinet (or in its cable tray) must also happen by fire propagation to create the possibility of two hot shorts leading to spurious ADS actuation of any single or multiple stage ADS lines. The AP1000 DCD, in Section 9.5.1.8, states, "The Combined License applicant provides an analysis that demonstrates that operator actions which minimize the probability of the potential for spurious ADS actuation as a result of a fire can be accomplished within 30 minutes following detection of the fire." The fire areas in question are constantly monitored by smoke detectors, which are alarmed in the main control room. When the fire alarm is detected in the control room, the emergency procedures direct the control room staff to immediately go to the fire area in question (one floor down) to confirm the fire; then go down another floor to a different fire zone in the same fire area to deactivate the specific IDS division by opening a breaker. This breaker is clearly marked and is in a fire zone that does not contain the cabinets or the cable trays. The two zones (one containing the cabinets and the other containing the deactivation switch) are on different floors. It is not expected that the operator's entry into the deactivation zone is hampered by the fire in the cabinet zone.

The most likely scenario is that the fire is limited to a cabinet or a cable tray. It is assumed that it takes at least 30 minutes for fire to potentially propagate from one cabinet/cable tray to another adjacent one. This time window allows a realistic chance for the operators to both deactivate the IDS division and to suppress the fire. It is also assumed that the fire alarm sounds within seconds to minutes of the fire starting, due to placement of fire detectors close to cabinets/cable trays, so that the operator time window for diagnosis and action is not considerably shortened.

If the operator action is performed successfully in the time window of 30 minutes following the alarm in the main control room, a spurious ADS signal is unlikely.

Calculation of OPA-01 HEP

Diagnosis and action phases of a human action is considered to model this operator action. Due to the relative shortness of the available time window and uncertainty about the length of the time window, no credit is taken for recovery phase.

It is assumed that a control room operator goes down one floor to confirm that a fire is in progress; then go another floor down to deactivate the division. A time period of 10 minutes is more than sufficient to perform these actions. This allows a time period of up to 20 minutes for the "diagnosis" phase of the operator action. The diagnosis is based on responding to an alarm in the control room. No reactor trip, or multiple alarms are expected at this point.

The performance shaping factors (PSF) for this operator action are as follows:

1. There are emergency procedures for this action. The procedures are short (short list: <= 10 items). However, it is not expected that these procedures are routinely simulated.

2. The diagnosis is to be made in the MCR; the action to deactivate takes place in a fire zone two floors down.

3. Initially, there should be no unduly stress factor. However, after the operator confirms the fire, there may be some additional stress, which may influence the deactivation step.

4. The action is simple, and unambiguous, once the fire is confirmed.

5. The 30-minute time window is adequate for both diagnosis and action.

6. The deactivation switch is well identified and visible during the event (no excessive smoke in the fire zone containing the switch); the lights in the zone and in the corridors leading to the zone are operational (either primary or emergency lighting is available). There are no similar switches in the vicinity of the deactivation switch.

The human error probability (HEP) is given below. The HEP for the OPA-01 is calculated as follows.

Diagnosis Phase

HEP for diagnosis within 20 minutes by control room personnel of abnormal event annunciated in the MCR:

Median: 0.01 (input from NUREG/CR-1278, August 1983, Table 20-3, Item 3)
Error Factor (EF): 10 (input)
Mean: 2.66E-02 (calculated)

Stress: Optimum (normal)
PSF adjustment for HEP = 1.0 (multiplier)

HEP(diagnosis) = 0.0266

Action Phase

HEP for omission of a step in a short procedure:

Median: 0.001 (input from NUREG/CR-1278, August 1983, Table 20-7, Item 1)
EF: 3 (input)
Mean: 1.25E-03 (calculated)

Stress: Moderately high
Tagging Level: Normal
PSF adjustment for HEP = 2.0 (multiplier)

HEP(action) = 0.0025

HEP(OPA-01) = HEP(diagnosis) + HEP(action) = 0.03

EF of HEP = 10 (higher of the two EFs is assigned).

Result

The mean value of the HEP for OPA-01 is calculated to be 0.03 with an error factor of 10 (assuming a lognormal distribution). The 95% confidence level of this HEP is 0.11.

Major modeling assumptions that may affect the result:

1. Availability of a 30-minute time window.

2. The operator can reach the deactivation switch (fire zone is not affected by the fire in the cabinet fire zone).

57B.2 Calculation of Failure Probability of OPA-02

The operator action is to diagnose a fire in the containment fire area 1100AF 11300B, and to open the manual valve to supply water to the fire suppression system in the area. This should be accomplished before multiple sets of cabinets/cable trays involving multiple divisions and

non-1E power are involved in the fire. This operator action is defined as OPA-02. The operator supplies water to the fire suppression system by opening a manual valve in fire area 12306, which is outside the Containment. The main reason for this operator action is to prevent a fire starting in non-1E power to propagate to 1E divisions, or vice versa. If the operator action fails, both the 1E division and non-1E power in the area are conservatively assumed to be inoperable due to fire. Hot shorts may occur whether the operator action is successful or not.

A fire in the containment fire area 1100AF 11300B is alarmed both in the MCR and also in the central fire security station. There are fire procedures that directs the fire emergency personnel to go to the fire zone 1231AF12306 and open a manual valve to supply water to the fire suppression system in 1100AF 11300B. The valve is well tagged and easily located. The valve area is well lit (emergency lighting exists).

The time window to diagnose and perform this action is at least 30 minutes due to ample spacing between the 1E division cables and non-1E division cables. In fact, the distances between non-1E and 1E division cables involved make fire propagation from one set of cables to the other very unlikely. Currently, this fact is not credited probabilistically in the model.

Calculation of OPA-02 HEP

Diagnosis and action phases of a human action models this operator action. No credit is taken for recovery phase.

A time period of 10 minutes is more than sufficient to perform the action phase. This allows a time period of up to 20 minutes for the "diagnosis" phase of the operator action. The diagnosis is based on responding to an alarm in the central fire security station. No multiple alarms are expected at this point.

The performance shaping factors for these operator actions are as follows:

1. There are emergency procedures for this action. The procedures are short (short list: <= 10 items). However, it is not expected that these procedures are routinely simulated.

2. The diagnosis is to be made in the central fire security station; the action takes place in fire zone 1231AF12306, which is not affected by the fire. The fire (that is in the Containment) does not affect the route from the central fire security station to the fire suppression water supply manual valve.

3. Initially, there should be no unduly stress factor. However, after the operator confirms the fire, there may be some additional stress, which may influence the action step.

4. The action is simple, and unambiguous, once the fire is confirmed.

5. The 30-minute time window is adequate for both diagnosis and action.

6. The manual valve is well identified and visible during the event. The lights in the fire zone containing the actuation manual valve and in the corridors leading to the zone are operational (either primary or emergency lighting is available). There are no other valves within the near vicinity of the valve in question.

The human error probability (HEP) is given below. The HEP for the OPA-02 is calculated as follows.

Diagnosis Phase

HEP for diagnosis within 20 minutes (by control room personnel – assumed to apply also to the central fire security station emergency personnel) of abnormal event annunciated in the central fire security station:

Median: 0.01 (input from NUREG/CR-1278, August 1983, Table 20-3, Item 3)
EF: 10 (input)
Mean: 2.66E-02 (calculated)

Stress: Optimum (normal)
PSF adjustment for HEP = 1.0 (multiplier)

HEP (diagnosis) = 0.0266

Action Phase

HEP for omission of a step in a short procedure:

Median: 0.001 (input from NUREG/CR-1278, August 1983, Table 20-7, Item 1)
EF: 3 (input)
Mean: 1.25E-03 (calculated)

Stress: Moderately high
Tagging Level: Normal
PSF adjustment for HEP = 2.0 (multiplier)

HEP(action) = 0.0025

HEP (OPA-01) = HEP (diagnosis) + HEP (action) = 0.03

EF of HEP = 10 (higher of the two EFs is assigned).

Result

The mean value of the HEP for OPA-02 is calculated to be 0.03 with an error factor of 10 (assuming a lognormal distribution). The 95% confidence level of this HEP is 0.11.

Major modeling assumptions that may affect the result:

1. Availability of a 30-minute time window.

Failure Probability of Fire Suppression

The failure probability of fire suppression (Q8) is the sum of the failure probabilities of the operator action and the suppression equipment failure. Failure probability of suppression equipment is 0.05 (taken from Table 57-6).

$Q8 = 0.03 + 0.05 = 0.08.$

57B.3 Operator Actions at Remote Shutdown Panel

In the event of a MCR fire, the MCR crew trips the reactor, evacuates the MCR, and disables the MCR functions from a panel outside the MCR. Then, they proceed to the remote shutdown workstation for plant shutdown operations. The systems potentially needed for the shutdown, reactor trip, SFW, CMT, ADS, etc., have automatic actuation capabilities still available (no need for operator actuation), similar to the MCR. Operator intervention is required only in cases that would have needed operator actions if the operators had been in the MCR.

Thus, credit is taken for automatic actuation of shutdown functions at the remote shutdown workstation after evacuation and deactivation of MCR. In these scenarios, the operator action (for cases of automatic actuation failures, or for those systems that do not have automatic actuation) failure probabilities are increased to reflect the potentially negative performance shaping factors. This is done in a screening analysis fashion (e.g., conservatively) by increasing the HEPs to 0.1, whenever they are less than 0.1.

57B.4 More Reliable REC-MANDAS

In Attachment 57A, Section 57A.2, the failure probability of ADS actuation by DAS has been revised (lowered), as discussed in that section. This revision implies that the REC-MANDAS operator action HEP, which is calculated to be 1.16E-02 for the base PRA case, has been reduced for the specific cases in which it is used for the fire scenarios. The reduction is at the order of a factor of 10.

ATTACHMENT 57C

FIRE AREA EVENT TREES DEFINING SCENARIOS

This attachment contains the event tree models for each fire area, the data used in the event trees to quantify the scenario initiating event frequencies (Table 57C-1), and the scenario CDFs (Table 57C-2).

Table 57C-1 (Sheet 1 of 5)

DATA USED IN EVENT TREE SCENARIO FREQUENCY CALCULATIONS

TABLE 57-6 AUTOMATIC SUPPRESSION SYSTEM RELIABILITY

System Type	Unavailability of System	Source
Wet Pipe Sprinkler System	2.00E-02	Table 57-6
Preaction or Dry Pipe Sprinkler System	5.00E-02	Table 57-6
Deluge Sprinkler or Water Spray System	5.00E-02	Table 57-6
CO_2 System	4.00E-02	Table 57-6
Halon System	5 00E-02	Table 57-6
No Fire Suppression System	1	Total Failure = 1
Fire Suppression System in Zone 1100 AF 11300B	8.00E-02	See Atttachment 57B, Paragraph 57B.1
Probability of Fire Propagation to an Adjacent Area	0.01	Assumed Value (See Paragraph 57.4.2)
Probability of Hot-Shorts Leading to Spurious Actuation - Case of One Ordered Cable	0 06	NUREG/CR-2258 (See Reference 8)
No Spurious Actuation	0	If there is no spurious actuation, then Probability = 0

TABLE 57-7 FIRE IGNITION FREQUENCIES FOR AP1000 FIRE AREAS

Fire Area	Area Description	Ignition Frequency	Source
0000 AF 00	Yard Building (Including Transformer Yard)	2.00E-02	Table 57-3
1200 AF 01	RCA of Auxiliary Building (All Zones)	1.81E-02	Table 57-3
1200 AF 01 1220 AF 12251	RCA of Aux. Building Zone 1220 AF 12251 With Sprinklers	9.95E-03	
1200 AF 02	New Fuel and Used Fuel Storage, Waste Disposal Container (All Zones)	1.10E-03	Table 57-3
1200 AF 02 1230 AF 12371	New Fuel and Used Fuel Storage, Waste Disposal Container, Rail Car Bay Zone	1.84E-04	
1200 AF 03	Corridors 100' & 117'6"	1.63E-03	Table 57-3
1201 AF 02	Division B Batteries/DC Equipment Room/Instrumentation and Control	3.73E-03	Table 57-3
1201 AF 03	Division D DC Equipment/I&C	3.04E-03	Table 57-3

Table 57C-1 (Sheet 2 of 5)

DATA USED IN EVENT TREE SCENARIO FREQUENCY CALCULATIONS

Fire Area	Area Description	Ignition Frequency	Source
1201 AF 04	Division B/D VBS Equipment	3.60E-04	Table 57-3
1201 AF 05	MSIV Compartment A	6.60E-04	Table 57-3
1201 AF 06	MSIV Compartment B	3.31E-04	Table 57-3
1202 AF 02	Northeast Elevator Shaft	1.17E-03	Table 57-3
1202 AF 03	Division C Batteries/DC Equipment/I&C Room/RCP Trip Switchgear Room/I&C Penetration Room	4.45E-03	Table 57-3
1202 AF 04	Division A Electrical Equipment/Battery Room/I&C Room	3.00E-03	Table 57-3
1204 AF 01	RNS Pump Room B	4.97E-03	Table 57-3
1204 AF 03	South Shield Building Elevator Shaft	1.17E-03	Table 57-3
1205 AF 02	Southeast Elevator Shaft	1.17E-03	Table 57-3
1210 AF 01	Corridor/Spare Battery Room/Spare Room/Spare Battery Charger Room	1.47E-03	Table 57-3
1220 AF 01	Division B RCP Trip Switchgear/Spare Room/Corridor 82' 6"	4.43E-03	Table 57-3
1220 AF02	Lower Annulus Valve Area	1.71E-04	Table 57-3
1230 AF 01	Corridor Division A, B, C, D and Remote Shutdown Workstation	1.71E-04	Table 57-3
1230 AF 02	Non-Class 1E Electrical Compartment - 100'	1.56E-03	Table 57-3
1232 AF 01	Remote Shutdown Workstation	1.32E-04	Table 57-3
1240 AF 01	Non-Class 1E Electrical Compartment - 117'	1.55E-03	Table 57-3
1242 AF 02	Division A Penetration Area	3.33E-04	Table 57-3
1243 AF 01	Reactor Trip Switchgear I	2.84E-03	Table 57-3
1243 AF 02	Reactor Trip Switchgear II	2.84E-03	Table 57-3
1250 AF 01	Nonradioactive Ventilation System	2.68E-03	Table 57-3
2000 AF 01	Turbine Building Floor	6.47E-02	Table 57-3
2003 AF 01	Auxiliary Boiler Equipment Room	1.23E-03	Table 57-3
2009 AF 02	Elevator Machine Room	1.17E-03	Table 57-3
2033 AF 02	Motor-Driven Fire Pump Room	1.01E-03	Table 57-3

Table 57C-1 (Sheet 3 of 5)

DATA USED IN EVENT TREE SCENARIO FREQUENCY CALCULATIONS

Fire Area	Area Description	Ignition Frequency	Source
2040 AF 01	Clean and Dirty Lube Oil Storage	2.83E-04	Table 57-3
2043 AF 01	Chemical Laboratory	3.23E-04	Table 57-3
2050 AF 01	Lube Oil Conditioner Room	2.83E-04	Table 57-3
2052 AF 01	Southwest 6.9KV Switchgear Room	2.48E-03	Table 57-3
2053 AF 01	Electrical Equipment Room	6.70E-03	Table 57-3
2053 AF 02	Northwest 6.9KV Switchgear Room	2.48E-03	Table 57-3
4003 AF 01	Demineralized Water Deoxygenating Room/Air Handling Equipment Rooms	4.26E-03	Table 57-3
4031 AF 01	Battery Room and Battery Charger Room 1	2.87E-03	Table 57-3
4031 AF 02	Battery Room and Battery Charger Room 2/Computer Room B/Shift Turnover Room	3.14E-03	Table 57-3
4031 AF 05	Access Area, Access Corridor, Security Room 2, Corridor, Rest Room	1.42E-03	Table 57-3
4031 AF 06	Central Alarm Station/Security Room 1	1.93E-03	Table 57-3
4032 AF 01	Decontamination Room, Non-Radiological and Radiological Controlled Area Entries...	8.53E-04	Table 57-3
4032 AF 02	Containment Access Corridor Elevation 107'2"	4.38E-04	Table 57-3
4033 AF 01	Hot Machine Shop	1.67E-03	Table 57-3
4034 AF 01	General Offices	1.42E-03	Table 57-3
4041 AF 01	Conference Rooms/Computer Room A/Corridor	4.66E-04	Table 57-3
4041 AF 02	Corridor/Restroom	4.50E-04	Table 57-3
4042 AF 01	Non-Class 1E Switchgear #1	8.34E-03	Table 57-3
4042 AF 02	Non-Class 1E Switchgear #2	2.66E-03	Table 57-3
4052 AF 01	Staging and Storage Area/Containment Air Filtration Exhaust Rooms A & B	1.94E-03	Table 57-3
5031 AF 01	Radwaste Building	2.42E-02	Table 57-3
6030 AF 01	Diesel Generator Room A	2.99E-02	Table 57-3

Table 57C-1 (Sheet 4 of 5)

DATA USED IN EVENT TREE SCENARIO FREQUENCY CALCULATIONS

Fire Area	Area Description	Ignition Frequency	Source
6030 AF 02	Diesel Generator Room B	3.03E-02	Table 57-3
6030 AF 03	Fuel Oil Day Tank Room A	2.10E-04	Table 57-3
6030 AF 04	Fuel Oil Day Tank Room B	2.10E-04	Table 57-3
Total		2.80E-01	Table 57-3

TABLE 57-4 FIRE IGNITION FREQUENCIES FOR AP1000 CONTAINMENT FIRE AREA

Fire Area	Description	Frequency	Source
1100 AF 11204	Reactor Coolant Drain Tank Room	3.50E-05	Table 57-4
1100 AF 11206	Accumulator Room A	1.81E-05	Table 57-4
1100 AF 11207	Accumulator Room B	1.81E-05	Table 57-4
1100 AF 11208	RNS Valve Room	1.81E-05	Table 57-4
1100 AF 11300A	Maintenance Floor (SE Quadrant Access)	1.54E-04	Table 57-4
1100 AF 11300B	Maintenance Floor (NNE Quadrant) and RCDT Access	3.71E-04	Table 57-4
1100 AF 11301	SG Compartment 1	1.70E-04	Table 57-4
1100 AF 11302	SG Compartment 2	9.51E-05	Table 57-4
1100 AF 11303	Pressurizer Compartment	1.81E-05	Table 57-4
1100 AF 11303A	ADS Lower Valve Area	1.81E-05	Table 57-4
1100 AF 11303B	ADS Upper Valve Area	1.81E-05	Table 57-4
1100 AF 11500	Operating Deck	4.92E-04	Calculated in Section 57.3.4 as 4.90E-04
1200 AF 12341	Middle Annulus	2.29E-05	Table 57-4
1200 AF12555	Main Control Room Emergency Habitability System Air Storage/Operating Deck Staging Area	1.50E-03	Table 57-4
	Total	2.95E-03	Table 57-4
	Main Control Room Fire Ignition Frequency	9.5E-03	Section 57.4.5.3
	MCR CDF	3.18E-12	Section 57.6

Table 57C-1 (Sheet 5 of 5)

DATA USED IN EVENT TREE SCENARIO FREQUENCY CALCULATIONS

Fire Area	Description	Frequency	Source
	Calculations		
	Failure of Suppression in a Zone Without Automatic Fire Suppression	1	Manual Fire Suppression Not Credited in AP1000
	Both NSS Trains Are Damaged By Fire In A Turbine Floor Fire Scenario When Suppression Works	0.5	Expresses the possibility of just losing one out of two NSS trains
	LOSP Following Yard Building Fire	1	LOSP Assumed Following A Yard Fire
	Logical Switch 1	1	Probability = 1
	HF-1 To Switch Off The Electrical Cabinets In Case of Fire In A Room	0.97	The probability to fail to switch off the electrical cabinets in one electrical division is 0.03; then the probability to switch off the cabinet before spurious actuation is 1-0.03=0.97
	Spurious Actuation Stage 4/Spurious Actuation Stage 1, 2 or 3 + Stage 4	0.5	= 2/(2+2)
	Logical Switch 0	0	Probability =0
	Qxx (fire propagation from I&C to DAS cables) within the same containment fire zone	1.00E-02	Section 57.4.5.2; fire area 1100AF 11300B

Table 57C-2 (Sheet 1 of 5)

CCDPs USED IN FIRE EVENT TREES

TABLE 57A-1 SUMMARY OF SCENARIO CCDPs

Initiating Event	Scenario Description (Additional Failures)	Fire Scenario CCDP	CCDP Scenario Number	AP1000 CCDP	Ratio f/a
		f		a	
IEV-LMFW	Loss of SFW, CCW, SWS, CAS	7.73E-08	SCEN1	2.45E-09	31.53
IEV-TRANS	Loss of SFW, CCW, SWS, CAS	7.51E-08	SCEN1A	2.10E-09	35.72
IEV-LMFW	Loss of SFW, CCW, SWS, CAS, Div D	1.93E-07	SCEN2	2.45E-09	78.51
IEV-LMFW	Loss of SFW, CCW, SWS, CAS, Div B	1.93E-07	SCEN2A	2.45E-09	78.51
IEV-SPADS	Loss of SFW, CCW, SWS, CAS, Div D	1.25E-03	SCEN3	5.48E-04	2.28
IEV-SPADS	Loss of SFW, CCW, SWS, CAS, Div D	1.25E-03	SCEN3A	5.48E-04	2.28
IEV-SPADS	Loss of Division B power	1.25E-03	SCEN3B	5.48E-04	2.28
IEV-SPADS	Loss of Division A power	1.25E-03	SCEN3C	5.48E-04	2.28
IEV-SPADS	Loss of Division D power	1.25E-03	SCEN3D	5.48E-04	2.28
IEV-LOSP	Loss of SFW, CCW, SWS, CAS, power on main AC buses OTH-R05 = 1	1.05E-07	SCEN4A	8.37E-09	12.54
IEV-LOSP	Loss of SFW, CCW, SWS, CAS, Div D, power on main AC buses	1.63E-07	SCEN5	8.37E-09	19.45
IEV-LOSP	Loss of SFW, CCW, SWS, CAS, Div D, power on main AC buses OTH-R05=1	2.33E-07	SCEN5A	8.37E-09	27.82
IEV-LMFW	Loss of one train of SFW, CCW, SWS, CAS	7.73E-08	SCEN6	2.45E-09	31.53
IEV-LMFW	Loss of one train of SFW, CCW, SWS, CAS, Div D	1.93E-07	SCEN7	2.45E-09	78.72
IEV-LOSP	AC power not recoverable after LOSP	1.02E-07	SCEN8	8.37E-09	12.18
IEV-MLOCA	Loss of Division B and D power	2.28E-03	SCEN9	3.69E-05	61.71
IEV-MLOCA	Loss of Division B and D power	2.28E-03	SCEN9A	3.69E-05	61.71
IEV-MLOCA	Loss of Division A and C power	2.28E-03	SCEN9B	3.69E-05	61.71
IEV-TRANS	Loss of A, B, C and D power	2.70E-06	SCEN10	2.10E-09	1.28E+03
IEV-TRANS	Loss of Division A and C power	2.70E-06	SCEN11	2.10E-09	1.28E+03
IEV-TRANS	Loss of Division B and D power	2.70E-06	SCEN11A	2.10E-09	1.28E+03

Table 57C-2 (Sheet 2 of 5)

CCDPs USED IN FIRE EVENT TREES

Initiating Event	Scenario Description (Additional Failures)	Fire Scenario CCDP	CCDP Scenario Number	AP1000 CCDP	Ratio f/a
IEV-SPADS	Loss of Division A and C power	1.60E-03	SCEN12	5.48E-04	2.92
IEV-SPADS	Loss of Division B and D power	1.60E-03	SCEN12A	5.48E-04	2.92
IEV-MLOCA	Loss of Division A and C power	2.28E-03	SCEN13	3.69E-05	61.71
IEV-TRANS	Loss of Division A power	2.70E-09	SCEN14	2.10E-09	1.28
IEV-TRANS	Loss of Division D power	7.47E-08	SCEN14A	2.10E-09	35.53
IEV-TRANS	Loss of Division B power	7.23E-08	SCEN14B	2.10E-09	34.39
IEV-TRANS	Loss of CVS	2.10E-09	SCEN15	2.10E-09	1.00
IEV-TRANS	Loss of RNS and CVS	2.55E-09	SCEN15A	2.10E-09	1.21
IEV-TRANS	Loss of Division C power and CVS	2.70E-09	SCEN16	2.10E-09	1.28
IEV-TRANS	Loss of Reactor Trip Switchgear I	2.10E-09	SCEN17	2.10E-09	1.00
IEV-MLOCA	Loss of DAS, RNS, and CVS	1.31E-03	SCEN18	3.69E-05	35.46
IEV-SPADS	Loss of RNS, CVS and DAS	1.02E-03	SCEN19	5.48E-04	1.86
IEV-MLOCA	Loss of Division B power	8.07E-04	SCEN20	3.69E-05	21.84
IEV-MLOCA	Loss of Division D power	8.07E-04	SCEN20A	3.69E-05	21.84
IEV-MLOCA	Loss of Division C power	8.07E-04	SCEN20B	3.69E-05	21.84
IEV-MLOCA	Loss of Division A power	8.07E-04	SCEN20C	3.69E-05	21.84
IEV-TRANS	Loss of DAS & non-1E electrical division	1.38E-06	SCEN21	2.10E-09	657.14
IEV-TRANS	Loss of Division C, DAS & non-1E electrical division	1.38E-06	SCEN22	2.10E-09	657.14
IEV-MLOCA	Loss of Division C, DAS & non-1E electrical division	2.05E-03	SCEN23	5 48E-04	3.74
IEV-MLOCA	Loss of Division C, DAS & non-1E electrical division	2.05E-03	SCEN24	3.69E-05	55.49
IEV-SPADS	Loss of Division C power	1.25E-03	SCEN25	5.48E-04	2.28
IEV-LMFW	Loss of MFW and SFW	7.73E-08	SCEN26	2.45E-09	31.53
IEV-LOSP	Loss of SFW, CCW, SWS, CAS, Div D	1.08E-07	SCEN27	8.37E-09	12.90
IEV-LOSP	Loss of SFW, CCW, SWS, CAS	1.87E-08	SCEN28	8.37E-09	2.23

Table 57C-2 (Sheet 3 of 5)

CCDPs USED IN FIRE EVENT TREES

Initiating Event	Scenario Description (Additional Failures)	Fire Scenario CCDP	CCDP Scenario Number	AP1000 CCDP	Ratio f/a
IEV-TRANS	Loss of IRWST valves 117A, 118A, 120A, 123A and 125A	2.10E-09	SCEN29	2.10E-09	1.00
IEV-TRANS	Loss of RNS MOV-023	2.55E-09	SCEN30	2.10E-09	1.21
IEV-LMFW	Loss of 1 CMT, MFW & SFW	7.34E-08	SCEN31	2.45E-09	29.94
IEV-LMFW	Loss of A & C Div, 2 CMT, MFW, SFW, DAS, 1 train of CCW, non-1E electrical division & hydrogen igniters	4.81E-04	SCEN32	2.45E-09	1.96E+05
IEV-TRANS	Loss of A & C Div, 2 CMT, DAS, 1 train of CCW, non-1E electrical division & hydrogen igniters	2.46E-06	SCEN33	2.10E-09	1.17E+03
IEV-SPADS	Loss of A & C Div, 2 CMT, MFW, SFW, DAS, 1 train of CCW, non-1E electrical division & hydrogen igniters	1.00E-00	SCEN34	5.48E-04	1.82E+03
IEV-SPADS	Loss of MFW and SFW	5.48E-04	N/A	5.48E-04	1.00
IEV-TRANS	Loss of 1 stage 1, 2 & 3 of ADS	2.99E-09	SCEN35	2.10E-09	1.42
IEV-MLOCA	Loss of 1 stage 1, 2 & 3 of ADS	4.03E-05	SCEN36	3.69E-05	1.09
IEV-LMFW	Loss of Div B & D, MFW and SFW	1.08E-06	SCEN37	2.45E-09	440.50
IEV-TRANS	Loss of Division A & DAS	1.38E-06	SCEN38	2.10E-09	657.14
IEV-MLOCA	Loss of Div A, DAS, non-1E electrical division & hydrogen igniters	1.94E-03	SCEN39	3.69E-05	52.51
IEV-TRANS	Loss of Division A & C, one CMT, one PRHR isolation valve and one path of CCW	1.02E-06	SCEN40	2.10E-09	485.71
IEV-TRANS	Loss of two diesel generators	2.10E-09	SCEN41	2.10E-09	1.00
IEV-SPADS	Loss of Division A & C, one CMT, one PRHR isolation valve and one path of CCW	2.50E-03	SCEN42	5.48E-04	4.56
IEV-TRANS	ALL HEP set to 1	2.91E-08	SCEN43	2.10E-09	13.86
IEV-TRANS	ALL HEP set to 0.1	4.35E-09	SCEN44	2.10E-09	2.07
IEV-MLOCA	Loss of A & C divisions (or B &D divisions) and loss of DAS	1.0	SCEN45	3.69E-05	27100

Table 57C-2 (Sheet 4 of 5)

CCDPs USED IN FIRE EVENT TREES

TABLE 57A-2 AP1000 BASE CASE CCDPs FOR INITIATING EVENTS

	Initiating Event	% Contribution to Plant CDF	# of Cutsets	Initiating Event CDF	Initiating Event Frequency	Initiating Event CCDP
1	IEV-SI-LB	39.5	1120	9.50E-08	2.12E-04	4.48E-04
2	IEV-LLOCA	18.7	286	4.50E-08	5.00E-06	8.99E-03
3	IEV-SPADS	12.3	1078	2.96E-08	5.40E-05	5.48E-04
4	IEV-SLOCA	7.52	1639	1.81E-08	5.00E-04	3.61E-05
5	IEV-MLOCA	6.7	1682	1.61E-08	4.36E-04	3.69E-05
6	IEV-RV-RP	4.16	1	1.00E-08	1 00E-08	1.00E-00
7	IEV-SGTR	2.77	2730	6.66E-09	3.88E-03	1.72E-06
8	IEV-CMTLB	1.53	989	3.68E-09	9.31E-05	3.95E-05
9	IEV-ATWS	1.51	145	3.62E-09	4.81E-01	7.53E-09
10	IEV-TRANS	1.22	1254	2.94E-09	1.40E-00	2.10E-09
11	IEV-POWEX	0.69	692	1.66E-09	4.50E-03	3.69E-07
12	IEV-RCSLK	0.69	1428	1.65E-09	6.20E-03	2.66E-07
13	IEV-LCOND	0.51	838	1.24E-09	1.12E-01	1.11E-08
14	IEV-LOSP	0.42	2224	1.00E-09	1.20E-01	8.37E-09
15	IEV-LMFW	0.34	1285	8.21E-10	3.35E-01	2.45E-09
16	IEV-ATW-T	0.3	15	7.13E-10	1.17E-00	6.09E-10
17	IEV-LCAS	0.28	416	6.72E-10	3.48E-02	1.93E-08
18	IEV-SLB-V	0.25	305	6.06E-10	1.21E-03	5.01E-07
19	IEV-PRSTR	0.18	320	4.29E-10	1.34E-04	3.20E-06
20	IEV-LMFW1	0.18	740	4.26E-10	1.92E-01	2.22E-09
21	IEV-LCCW	0.13	692	3.16E-10	1.44E-01	2.20E-09
22	IEV-SLB-U	0.05	160	1.31E-10	3.72E-04	3.51E-07
23	IEV-ATW-S	0.05	55	1.11E-10	1.48E-02	7.49E-09

Table 57C-2 (Sheet 5 of 5)

CCDPs USED IN FIRE EVENT TREES

	Initiating Event	% Contribution to Plant CDF	# of Cutsets	Initiating Event CDF	Initiating Event Frequency	Initiating Event CCDP
24	IEV-ISLOC	0.02	1	5.00E-11	5.00E-11	1.00E-00
25	IEV-LRCS	0.01	131	3.33E-11	1.80E-02	1.85E-09
26	IEV-SLB-D	0	18	9.15E-12	5.96E-04	1.54E-08

0000 AF 00 Yard Building (Including Transformer Yard)

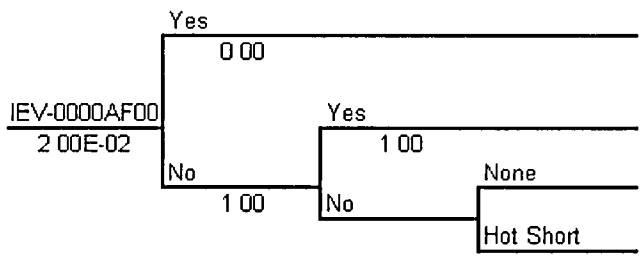

Fire Occurs In 0000 AF 00	Fire Suppression Successful	Fire Is Contained	No spurious ADS Actuation	Fire Scenario Number	Scenario IE Frequency	Conditional CDP	Scenario CDF	Initiating Event Type	CCDP Scenario number	Failed Components	Area Propagated Into
	Yes			TB-1	0 00E+00					No Risk	
	0 00										
IEV-0000AF00		Yes		TB-2	2 00E-02	1 02E-07	2 04E-09	IEV-LOSP	SCEN8	See Note 1	None
2 00E-02		1 00									
	No		None	TB-3							
	1 00	No									
			Hot Short	TB-4							
				Total =	2 00E-02		2 04E-09				

Note
1 Loss of offsite power event is assumed to occur, and is assumed to be not recoverable in a short time period (R05 in LOSP event)

Figure 57C-1

0000 AF 00 Yard Building (Including Transformer Yard)

1200 AF 01 RCA of Auxiliary Building (All Zones)

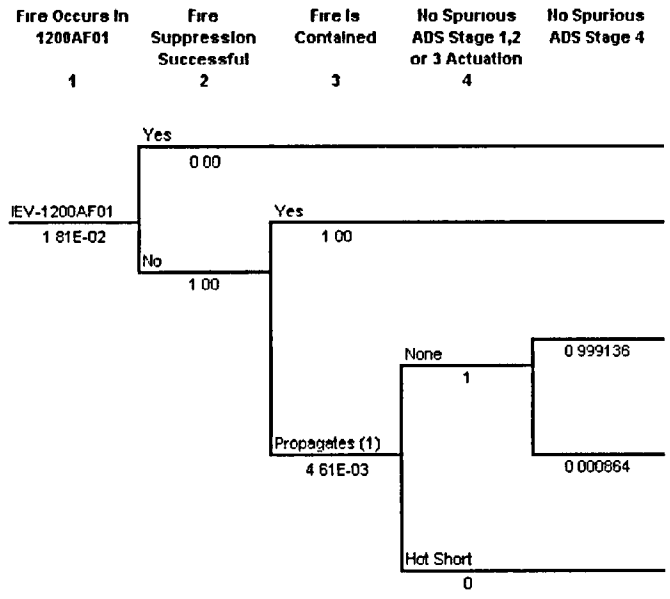

Fire Scenario Number	Scenario IE Frequency	Conditional CDP	Scenario CDF	Initiating Event Type	CCDP Scenrio number	Failed Components	Area Propagated Into
TB-1	0 00E+00	0 00E+00	0 00E+00				None
TB-2	1 80E-02	2 55E-09	4 59E-11	IEV-TRANS	SCEN15A	Loss of one RNS train and loss of CVS	None
TB-3	8 34E-05	1 38E-06	1 15E-10	IEV-TRANS	SCEN21	Loss of RNS, CVS, DAS (cables), and loss of B and D signals to the reactor switchgear	1230 AF 02
TB-5	7 21E-08	1 02E-03	7 36E-11	IEV-SPADS	SCEN19	Loss of RNS, CVS, DAS (cables), and loss of B and D signals to the reactor switchgear, spurious opening of one ADS stage 4 (DAS cables)	1230 AF 02
TB-6	0 00E+00	1 31E-03	0 00E+00	IEV-MLOCA	SCEN18	Loss of RNS, CVS, DAS (cables), and loss of B and D signals to the reactor switchgear, spurious opening of ADS stage 1,2,3 (DAS cables)	1230 AF 02
		Total =	2.35E-10				

Note:

1 The probability of propagation takes into account the automatic fire suppression system in the zone 1220 AF 12251

Thus, the fire propagates with a probability of 0 01 If it starts in the zone 1220 AF 12251 and the fire suppression fails or if the fire starts anywhere else

Probability of propagation (Calc 1): 4 61E-03

2 The probability of actuation of stage 4 is 4 times (because 4 valves) the spurious actuation due to hot shorts in manual cables

3 There is no possibility of spurious actuation of stage 1 or 2 or 3

Calc 1

Probability = (RCA of Aux Building Zone 1220 AF 12251 With Sprinklers x Wet Pipe Sprinkler System Unavailability + (RCA of Auxiliary Building All Zones - RCA of Aux Building Zone 1220 AF 12251 With Sprinklers)) x (Probability of Fire Propagation to an Adjacent Area/ RCA of Auxiliary Building All Zones)

Probability = (9 95E-03 x 2 00E-02 + (1 81E-02 - 9 95E-03)) x (0 01/1 81E-02)

Probability = 4 61E-03

Figure 57C-2

1200 AF 01 RCA of Auxiliary Building (All Zones)

1200 AF 02 **New Fuel and Used Fuel Storage, Waste Disposal Container (All Zones)**

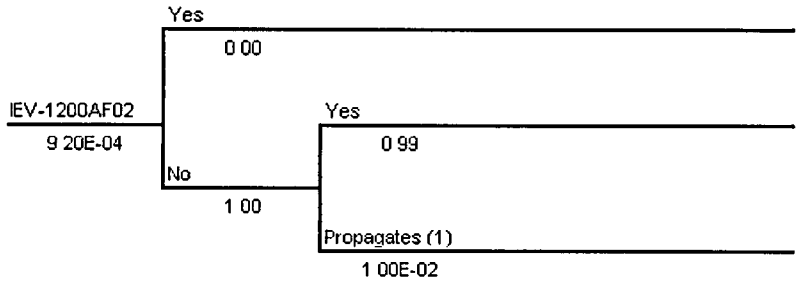

Fire Occurs In 1200AF02	Fire Suppression Successful	Fire Is Contained	No Spurious ADS Stage 1, 2 or 3 Actuation	No Spurious ADS Stage 4	Fire Scenario Number	Scenario IE Frequency	Conditional CDP	Scenario CDF	Initiating Event Type	CCDP Scenario number	Failed Components	Area Propagated Into
	Yes				TB-1	0 00E+00	0 00E+00	0 00E+00			no	None
		Yes			TB-2	9 10E-04	0 00E+00	0 00E+00			no	None
		Propagates (1)			TB-3	9 20E-06	2 55E-09	2 34E-14	EV-TRANS	SCEN15A	Loss of RNS, CVS	1200 AF 01
							Total =	2 34E-14				

Note

1 Ignition frequency is modified to take into account the fact there is a suppression system in one zone of the area that avoid propagation

A risk appears only in case of propagation

Ignition Frequency Calulation 9 20E-04

Ignition Frequency = (New Fuel and Used Fuel Storage, Waste Disposal Container (All Zones) - New Fuel and Used Fuel Storage, Waste Disposal Container, Rail Car Bay Zone + (New Fuel and Used Fuel Storage, Waste Disposal Container, Rail Car Bay Zone x Unavailability of Wet Pipe Sprinkler System)

Ignition Frequency = 0 0011 - 0 000184 + (000184 x 02)

Ignition Frequency = 9 20E-04

Figure 57C-3

1200 AF 02 New Fuel and Used Fuel Storage, Waste Disposal Container (All Zones)

1200 AF 03 Corridors 100'&117'6"

Fire Occurs In 1200AF03 1	Fire Suppression Successful 2	Fire Is Contained 3	No Spurious ADS Stage 4 (DAS) 4	Fire Scenario Number	Scenario IE Frequency	Conditional CDP	Scenario CDF	Initiating Event Type	CCDP Scenario number	Failed Components	Area Propagated Into
IEV-1200AF03 1 63E-03	Yes 0 00			TB-1	0 00E+00	2 70E-06	0 00E+00	IEV-TRANS	SCEN11A		None
	No 1 00	Yes 0 99	0 999136	TB-2	1 61E-03	2 70E-06	4 35E-09	IEV-TRANS	SCEN11A	Some Division B&D I&C cables (But ADS actuation is available), loss of DAS, loss of B and D signals to the reactor trip switchgear	None
			0 000864	TB-3	1 39E-06	1 60E-03	2 23E-09	IEV-SPADS	SCEN12A	Some Division B&D I&C cables (But ADS actuation is available), loss of DAS, loss of B and D signals to the reactor trip switchgear, opening of 1 ADS Stage 4 (due to DAS damage)	None
		Propagates 1 00E-02	None 0 999136	TB-4	1 63E-05	2 70E-06	4 40E-11	IEV-TRANS	SCEN11A	Some Division B&D I&C cables (But ADS actuation is available), loss of DAS, loss of B and D signals to the reactor trip switchgear, loss of Division C of power and control	1202 AF 03
			Hot Short 0 000864	TB-5	1 41E-08	1 60E-03	2 25E-11	IEV-SPADS	SCEN12	Some Division B&D I&C cables (But ADS actuation is available), loss of DAS, loss of B & D signals to the reactor trip switchgear, opening of 1 ADS Stage 4 (due to DAS damage), loss of Division C of power and control	1202 AF 03
						Total =	6 65E-09				

Notes

1 Probability of spurious actuation of Stage 4 is multiplied by 4 to represent all four Stage 4 valves

The spurious actuation due to hot shorts in manual cables = 4(06)(06)(06)

The spurious actuation due to hot shorts in manual cables = 0 000864

2 The loss of Division B & D cables in this area does not imply the loss of ADS, therefore, an assumption is made that there is only a spurious actuation of Stage 4 by DAS cables

To be not too conservative, the CCDP models the loss of B & D divisions with the DAS still being available

3 For Fire Scenario TB-4, a loss of 4 divisions is conservatively assumed

Figure 57C-4

1200 AF 03 Corridors 100′ & 117′ 6″

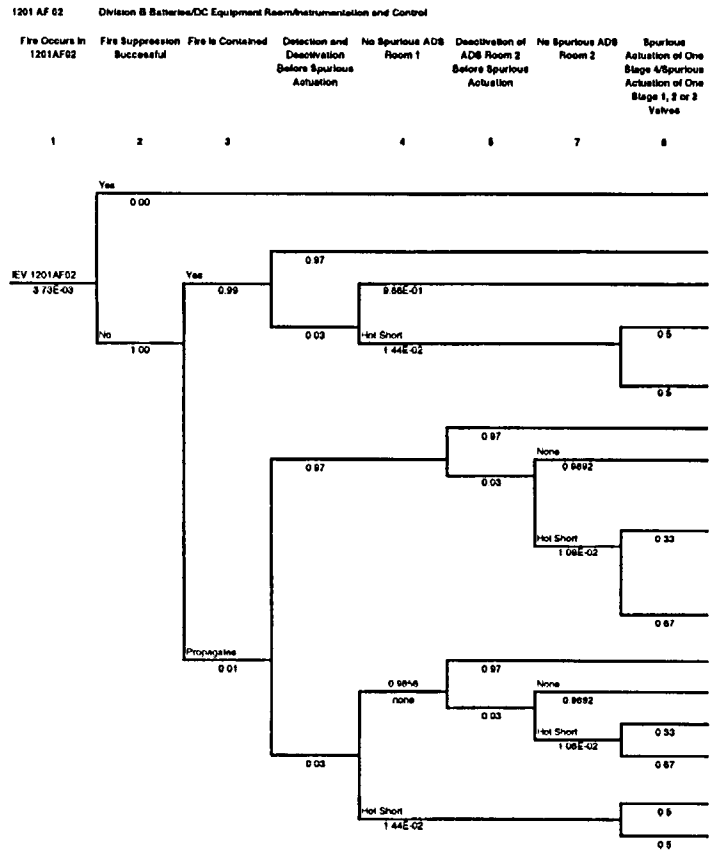

Fire Scenario Number	Scenario IE Frequency	Conditional CDF	Scenario CDF	Initiating Event Type	CCDP Scenario number	Failed Components	Area Propagated Into
TB 1	0 00E+00	7 23E-08	0 00E+00	IEV TRANS	SCEN14B	Loss of Div B (ADS V001B/V011B/V003B/V013B Inoperable By 1E-Division)	None
TB-2	3 58E-03	7 23E-08	2 59E 10	IEV TRANS	SCEN14B	Loss of Div B (ADS V001B/V011B/V003B/V013B Inoperable By 1E-Division)	None
TB 2	1 09E-04	7 23E-08	7 89E 12	IEV TRANS	SCEN14B	See TB-2	
TB-3	7 96E-07	8 07E-04	6 44E 10	IEV-MLOCA	SCEN20	Loss of Div B Spurious Opening of 1 ADS Stages 1 and/or 2 and/or 3 (MLOCA)	None
TB-4	7 96E-07	1 25E-03	9 97E 10	IEV-SPADS	SCEN3B	Loss of Div B Spurious Opening of 1 ADS Stages 4 V004B (LLOCA or SPADS)	None
TB 5	3 51E-05	2 70E-06	9 46E 11	IEV TRANS	SCEN11A	Loss of Division B &D.(V002B/V0012B/V001B/V011B V004B and V004D Inoperable By 1E-Division)	1201 AF 03
TB-5	1 07E-08	2 70E-06	2.90E 12	IEV TRANS	SCEN11A	See TB-5	1201 AF 03
TB-6	3 87E-08	2 28E-03	8 82E 12	IEV-MLOCA	SCEN9A	Loss of Division B &D Spurious Opening of One Stage 1 and/or 2 and/or 3 (MLOCA),(V004D and V004B Inoperable By 1E-Division)	1201 AF 03
TB 7	7 85E-09	1 60E-03	1 26E 11	IEV SPADS	SCEN12A	Loss of Division B &D Spurious Opening of V004D (LLOCA or SPADS V004B and V002B/V0012B/V001B/V011B/V003B/V013 B Inoperable By 1E-Division)	1201 AF 03
TB-5	1 07E-08	2 70E-06	2 69E 12	IEV TRANS	SCEN11A	See TB-5	1201 AF 03
TB-5	3 27E-08	2 70E-06	8 84E 14	IEV TRANS	SCEN11A	See TB-5	1201 AF 03
TB-6	1 18E 10	2 28E-03	2 69E 13	IEV MLOCA	SCEN9A	See TB-6	1201 AF 03
TB-7	2 39E 10	1 60E-03	3 83E 13	IEV SPADS	SCEN12A	See TB-7	1201 AF 03
TB-6	8 06E-09	2 28E-03	1 84E 11	IEV-MLOCA	SCEN9A	See TB-6	1201 AF 03
TB-7	8 06E-09	1 60E-03	1.29E 11	IEV-SPADS	SCEN12A	See TB-7	1201 AF 03
		Total =	2 08E-09				

Notes

1 1 44E 02 is 4 valve failures of two cables calculated as 4(0 06)(0 06) There are 2 Stage 4 valves and 2 Stage 1, 2 or 3 valves included in tha calculation therefore the value is split between the two group of stages or 0 5

1 08E-02 is 3 valve failures of 2 cables calculated as 3(0 06)(0 06) There is one Stage 1, 2 or 3 valve and two Stage 4 valves therefore the split is 0 33 to 0 67 between the two group of stages

The probability of spurious actuation in Room B is 0 06 x 0 06 (V001B/V011B)+ 0 06x0.06 (V003B/V013B)+ 0 06x0 06 (V004B)+ 0 06x0 06 (V004D)

The probability of spurious actuation in Room D is 0 06 x 0 06 (V002B/V012B)+ 0 06 x 0 06 (V004B)+ 0 06 x 0.06 (V004D)

2 For Fire Scenario TB-2 manual fire suppression is not credited in AP1000 Fire PRA

3 For Fire Scenario TB 3, despite manual fire suppression and a 3-hour rated fire barrier the fire may propagate because of a failure of the fire barrier

4 For Fire Scenario TB-4 5 and 6 probability to deactivate the electrical cabinets before ADS spurious actuation

5 For Fire Scenario TB-7 and 8, spurious actuation of any ADS valve in Room 2 and ADS Stage 1 2 3 or 4 respectively

Figure 57C-5

1201 AF 02 Division B Batteries/ DC Equipment Room/Instrumentation and Control

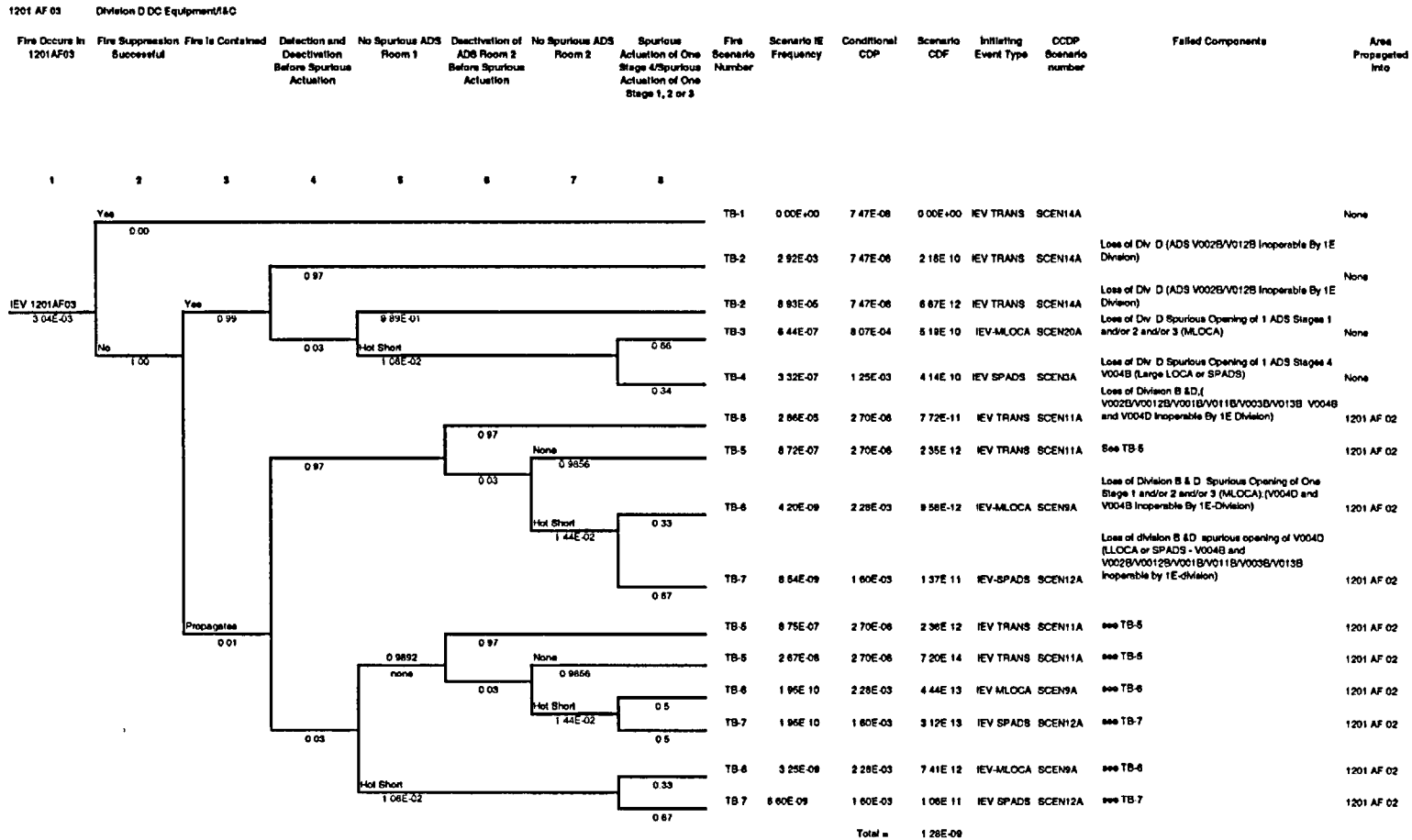

Notes

1 1 44E-02 is 4 valve failures of two cables calculated as 4(0 06)(0 06) There are 2 Stage 4 valves and 2 Stage 1, 2 or 3 valves included in this calculation therefore the value is split between the two group of stages or 0 5

1 08E-02 is 3 valve failures of 2 cables calculated as 3(0 06)(0 06) There is one Stage 1, 2 or 3 valve and two Stage 4 valves therefore the split is 0 33 to 0 67 between the two group of stages

The probability of spurious actuation in Room B is 0.06x0.06 (V001B/V011B)+ 0 06x0 06 (V003B/V013B)+ 0 06x0 06 (V004B)+ 0 06x0 06 (V004D)

The probability of spurious actuation in room D is 0 06x0 06 (V002B/V012B)+ 0 06x0 06 (V004B)+ 0 06x0 06 (V004D)

2 For Fire Scenario TB-2, manual fire suppression is not credited in AP1000 Fire PRA

3 For Fire Scenario TB-3 despite manual fire suppression and a 3-hour rated fire barrier the fire may propagate because of a failure of the fire barrier

4 For Fire Scenario TB-4 5 and 6 probability to deactivate the electrical cabinets before ADS spurious actuation

5 For Fire Scenario TB-7 and 8 spurious actuation of any ADS valve in Room 2 and ADS Stage 1, 2 3 or 4 respectively

Figure 57C-6

1201 AF 03 Division D DC Equipment/I&C

1201 AF 04 Division B/D VBS Equipment

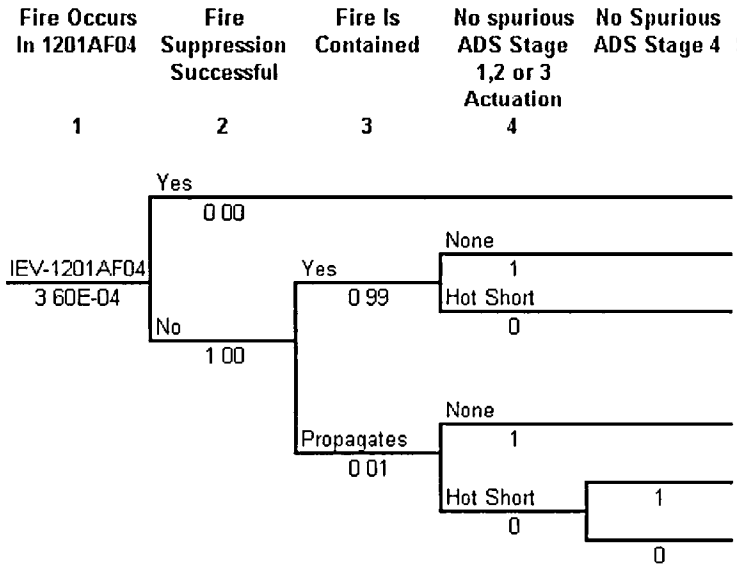

Fire Scenario Number	Scenario IE Frequency	Conditional CDP	Scenario CDF	Initiating Event Type	CCDP Scenario number	Failed Components	Area Propagated Into
TB-1	0 00E+00	7 47E-08	0 00E+00				None
TB-2	3 56E-04	7 47E-08	2 66E-11	IEV-TRANS	SCEN14A	Loss of Div D	None
TB-3	0 00E+00						None
TB-4	3 60E-06	1 08E-06	3 89E-12	IEV-LMFW	SCEN37	Loss of Division D, SFW, and MFW	1201 AF 05
TB-5	0 00E+00						
TB-6	0 00E+00						
		Total =	3 05E-11				

Note
1 Fire Scenario TB-4 is conservatively assumed to be a fire causing the loss of Divisions B & D, MFW and SFW

Figure 57C-7

1201 AF 04 Division B/D VBS Equipment

1201 AF 05 MSIV Compartment A

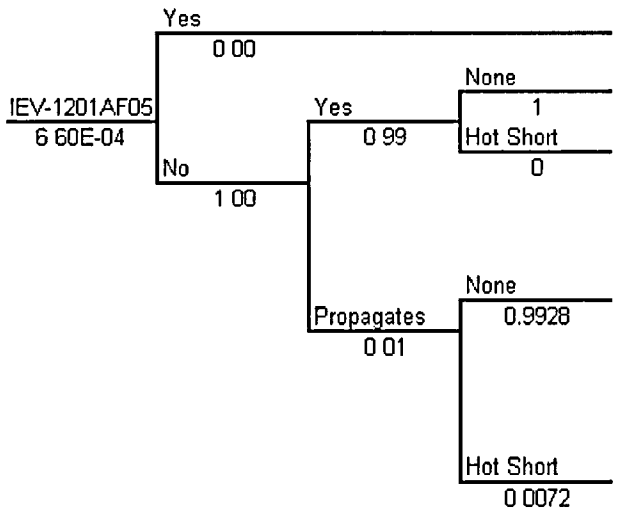

Fire Occurs In 1201AF05	Fire Suppression Successful	Fire Is Contained	No Spurious ADS	Fire Scenario Number	Scenario IE Frequency	Conditional CDP	Scenario CDF	Initiating Event Type	CCDP Scenario Number	Failed Components	Area Propagated Into
1	2	3	4								
	Yes			TB-1	0 00E+00	7 73E-08	0 00E+00				
		Yes	None	TB-2	6 53E-04	7 73E-08	5 05E-11	IEV-LMFW	SCEN1	Loss of SWS and SFW	None
		Propagates	None	TB-4	6 55E-06	1 93E-07	1.26E-12	IEV-LMFW	SCEN2	Loss of Division D, SWS, SFW (ADS V002B/V012B Inoperable)	1201 AF 03
			Hot Short	TB-5	4 75E-08	1 25E-03	5 94E-11	IEV-SPADS	SCEN3A	Loss of Division D, SWS, SFW, Spurious Opening of ADS Stage 4 V004B or V004D	1201 AF 03
						Total =	1 11E-10				

Note
1 For these fire scenarios, the CCDP conservatively is assumed to contain the loss of CCW and CAS in addition to SWS, SFW ,and ADS valves

Figure 57C-8

1201 AF 05 MSIV Compartment A

1201 AF 06 MSIV Compartment B

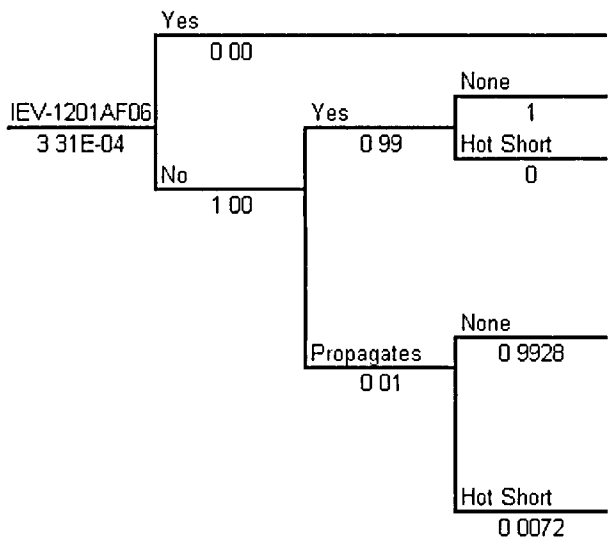

Fire Occurs In 1201AF06	Fire Suppression Successful	Fire Is Contained	No Spurious ADS	Fire Scenario Number	Scenario IE Frequency	Conditional CDP	Scenario CDF	Initiating Event Type	CCDP Scenario number	Failed Components	Area Propagated into
	Yes			TB-1	0 00E+00	7 73E-08	0 00E+00				
	No	Yes	None	TB-2	3 28E-04	7 73E-08	2 53E-11	IEV-LMFW	SCEN1	Loss of MSW, SFW	None
	No	Propagates	None	TB-4	3 29E-06	1 93E-07	6 33E-13	IEV-LMFW	SCEN2A	Loss of Division B, SWS and SFW (ADS V001B/V011B/V003B/V013 B Inoperable By 1E-Division)	1202 AF 03
	No	Propagates	Hot Short	TB-5	2 38E-08	1 25E-03	2 98E-11	IEV-SPADS	SCEN3B	Loss of Division B, SWS, SFW, and spurious opening of ADS Stage 4 V004B or V004D (LLOCA or SPADS)	1202 AF 03
						Total =	5 58E-11				

Note

1 A loss of CCWS and CAS is included in Fire Scenarios TB-1, TB-2, TB-3 but not for Fire Scenario TB-4

2 For spurious actuation of ADS Stage 4 a value of 0 0072 is derived from a loss of 2 failures of 2 cables (2(0 06)(0 06))

Figure 57C-9

1201 AF 06 MSIV Compartment B

1202 AF 02 Northeast Elevator Shaft

Fire Occurs In 1202AF02	Fire Suppression Successful	Fire Is Contained	No Spurious ADS	Fire Scenario Number	Scenario IE Frequency	Conditional CDP	Scenario CDF	Initiating Event Type	Fire Scenario Number	Failed Components	Area Propagated Into
1	2	3	4								
	Yes 0 00			TB-1	0 00E+00	0 00E+00	0 00E+00			No Risk	
IEV-1202AF02 1.17E-03		Yes 0 99		TB-2	1.16E-03	0	0 00E+00			No Risk	
	No 1 00										
		Propagates 0 01	None 0 9928	TB-3	1 16E-05	2 70E-09	3 14E-14	IEV-TRANS	SCEN14	Loss of Division A of Power and Control (ADS V001A/V011A Inoperable By 1E-Division)	1202 AF 04
			Hot Short 0 0072	TB-4	8 42E-08	8 07E-04	6 80E-11	IEV-MLOCA	SCEN20C	Loss of division A of power and control, spurious opening of ADS (V001A/V011A) or (V003A/V013A)	1202 AF 04
						Total =	6 80E-11				

Note
1 The probability of spurious actuation (0 0072) in Room A is 0 06x0 06 (V001A/V011A)+ 0 06x0 06 (V003A/V013A)

Figure 57C-10

1202 AF 02 Northeast Elevator Shaft

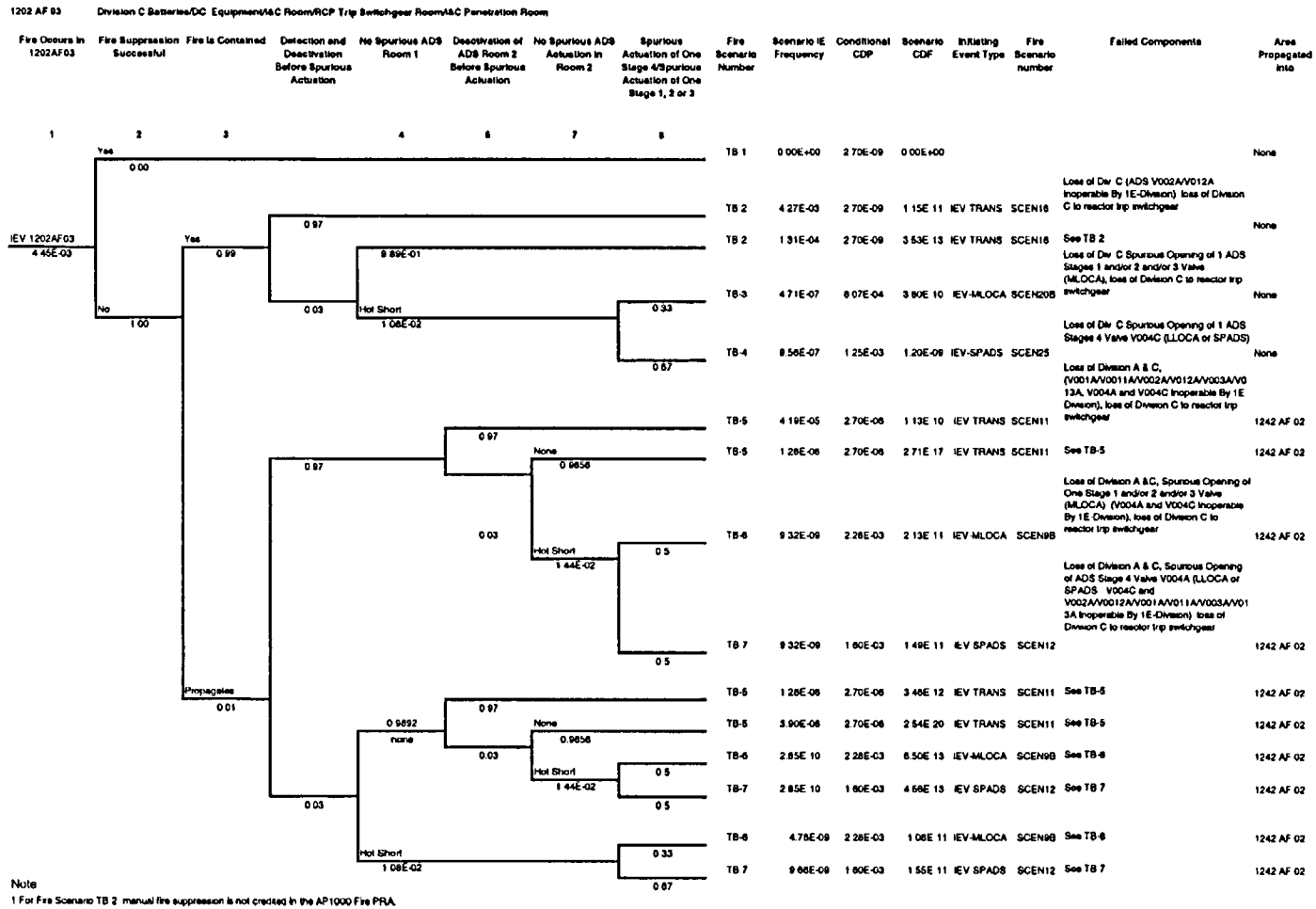

Note

1 For Fire Scenario TB 2 manual fire suppression is not credited in the AP1000 Fire PRA.

2 For Fire Scenario TB 3 despite manual fire suppression and a 3-hour rated fire barrier the fire may propagate because of a failure of the fire barrier

3 For Fire Scenario TB-4 5 and 6 probability to deactivate the electrical cabinets before ADS spurious actuation may begin

4 For Fire Scenario TB 7 and 8 spurious actuation of any ADS valve in Room 2 and Stage 1 2 3 or 4 respectively

5 1 44E-02 is 4 valve failures of two cables calculated as 4(0 06)(0.06) There are 2 Stage 4 valves and 2 Stage 1 2 or 3 valves included in the calculation therefore the value is split between the two group of stages or 0 5

1 08E-02 is 3 valve failures of 2 cables calculated as 3(0 06)(0.06) There is one Stage 1 2 or 3 valve and two Stage 4 valves therefore the split is 0 33 to 0 67 between the two group of stages

Total = 1 77E-08

Figure 57C-11

1202 AF 03 Division C Batteries/DC Equipment/I&C Room/ RCP Trip Switchgear Room/I&C Penetration Room

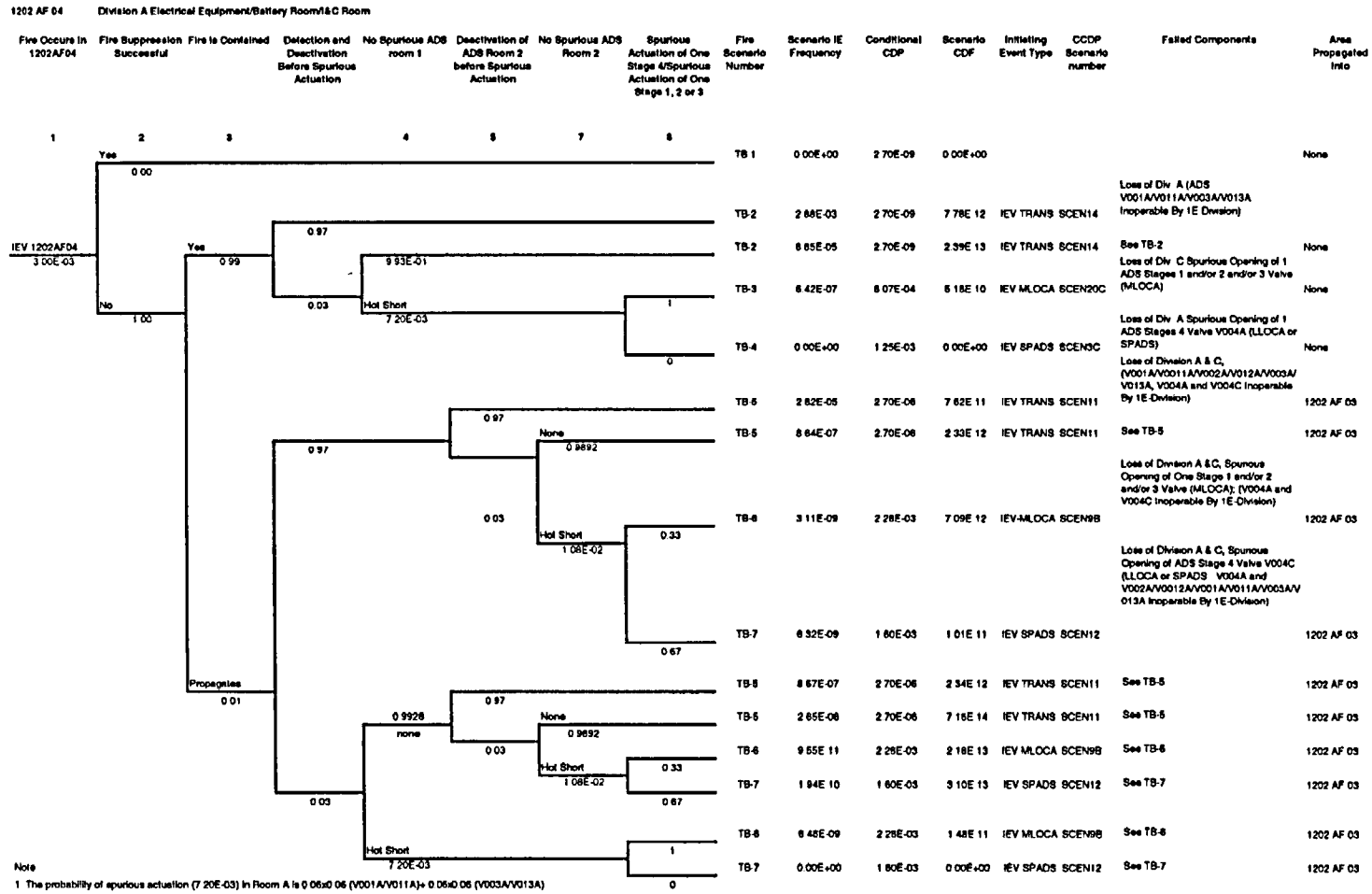

Note

1 The probability of spurious actuation (7 20E-03) in Room A is 0 06x0 06 (V001A/V011A)+ 0 06x0 06 (V003A/V013A) as all valves are valves from Stages 1 and 3 and none from Stage 4 then the failure is 1 and 0 respectively
The probability of spurious actuation (1 08E-02) in Room C is 0 06x0 06 (V002B/V012B)+ 0 06x0 06 (V004A)+ 0 06x0 06 (V004C) therefore a proportion of 0 33 and 0 67

2 For Fire Scenario TB-2, manual fire suppression is not credited in the AP1000 Fire PRA.

3 For Fire Scenario TB-3 despite manual fire suppression and a 3-hour rated fire barrier, the fire may propagate because of a failure of the fire barrier

4 For Fire Scenario TB-4, 5 and 6, probability to deactivate the electrical cabinets before ADS spurious actuation may begin

5 For Fire Scenario TB-7 and 8 spurious actuation of any ADS valve in Room 2 and Stage 1, 2, 3 or 4 respectively

Figure 57C-12

1202 AF 04 Division A Electrical Equipment/ Battery Room/I&C Room

1204 AF 01 RNS Pump Room B

Fire Occurs In 1204 AF 01	Fire Suppression Successful	Fire Is Contained	No Spurious ADS Actuation	Fire Scenario Number	Scenario IE Frequency	Conditional CDP	Scenario CDF	Initiating Event Type	CCDP Scenario number	Failed Components	Area Propagated Into
1	2	3	4								
IEV-1204AF01 4.97E-03	Yes 0 00			TB-1	0 00E+00	2 55E-09	0 00E+00				None
	No	Yes 0 99		TB-2	4 92E-03	2 55E-09	1 25E-11	IEV-TRANS	SCEN15A	Loss of One RNS Pump	
		No 0.01	1 00	TB-3	4 97E-05	2 55E-09	1 27E-13	IEV-TRANS	SCEN15A	Loss of RNS and CVS Systems	1200 AF 01
						Total =	1 27E-11				

Note
1 For Fire Scenario TB-2, the fire damage is conservatively assumed as a loss of RNS and CVS

Figure 57C-13

1204 AF 01 RNS Pump Room B

1204 AF 03 South Shield Building Elevator Shaft

Fire Occurs In 1204 AF 03	Fire Suppression Successful	Fire Is Contained	No Spurious ADS Actuation	Fire Scenario Number	Scenario IE Frequency	Conditional CDP	Scenario CDF	Initiating Event Type	CCDP Scenario number	Failed Components	Area Propagated Into
1	2	3	4								
IEV-1204AF03 1 17E-03	Yes 0 00			TB-1	0 00E+00	0	0 00E+00				None
	No	Yes 0 99		TB-2	1 16E-03	0 00E+00	0 00E+00			No Risk	
	1 00	No 0 01		TB-3	1 17E-05	2 55E-09	2 98E-14	IEV-TRANS	SCEN15A	Loss of RNS and CVS Systems	1200 AF 01
						Total =	2 98E-14				

Figure 57C-14

1204 AF 03 South Shield Building Elevator Shaft

1205 AF 02 Southeast Elevator Shaft

Fire Occurs In 1205 AF 02	Fire Suppression Successful	Fire Is Contained	No Spurious ADS Actuation	Fire Scenario Number	Scenario IE Frequency	Conditional CDP	Scenario CDF	Initiating Event Type	CCDP Scenario number	Failed Components	Area Propagated Into
1	2	3	4								
IEV-1205AF02 1 17E-03	Yes 0.00			TB-1	0 00E+00	0	0 00E+00				None
	No 1 00	Yes 0 99		TB-2	1.16E-03	0 00E+00	0 00E+00			No Risk	
		No 0 01		TB-3	1 17E-05	2 55E-09	2 98E-14	IEV-TRANS	SCEN15A	Loss of RNS and CVS Systems	1200 AF 01
						Total =	2 98E-14				

Figure 57C-15

1205 AF 02 Southeast Elevator Shaft

1210 AF 01 Corridor/Spare battery Room/Spare Room /Spare Battery Charger Room

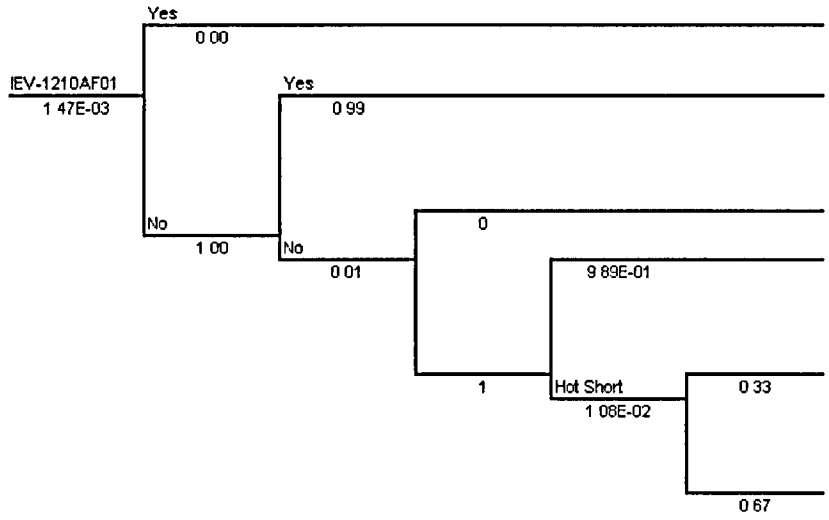

Fire Scenario Number	Scenario IE Frequency	Conditional CDP	Scenario CDF	Initiating Event Type	CCDP Scenario number	Failed Components	Area Propagated Into
TB-1	0 00	0 00E+00	0 00E+00			No Risk	
TB-2	1 46E-03	0 00E+00	0 00E+00			No Risk	
TB-3	0 00E+00	2 70E-09	0 00E+00	IEV-TRANS	SCEN16	Loss of Div C (ADS V002A/V012A Inoperable By 1E-Division), loss of Division C of Reactor Trip Switchgear	1202 AF 03
TB-3	1 45E-05	2 70E-09	3 93E-14	IEV-TRANS	SCEN16		
TB-4	5 24E-08	8 07E-04	4 23E-11	IEV-MLOCA	SCEN20B	Loss of Div C Spurious Opening of 1 ADS Stages 1 and/or 2 and/or 3 Valve (MLOCA), loss of Division C of Reactor Trip Switchgear	1202 AF 03
TB-5	1 06E-07	1 25E-03	1 33E-10	IEV-SPADS	SCEN3C	Loss of Div C Spurious Opening of 1 ADS Stages 4 Valve V004C (LLOCA or SPADS)	1202 AF 03
		Total =	1 75E-10				

Note
1 for Fire Scenario TB-3, a loss is conservatively assumed as a loss of Division C and CVS
2 For Fire Scenario TB-5, the loss is assumed to be a loss of Division A and SPADS
3 The probability of spurious actuation (1 08E-02) in Room C is 0 06x0 06 (V002B/V012B)+ 0 06x0 06 (V004A)+ 0 06x0 06 (V004C), therefore, a split of 0 33 for Stage 2 and 0 67 for Stage 4

Figure 57C-16

1210 AF 01 Corridor/Spare Battery Room/ Spare Room/Spare Battery Charger Room

1220 AF 01 Division B RCP Trip Switchgear/Spare Room/Corridor 82' - 6"

Fire Occurs In 1220AF01 1	Fire Suppression Successful 2	Fire Is Contained 3	No Spurious ADS Stage 4 4	Fire Scenario Number	Scenario IE Frequency	Conditional CDP	Scenario CDF	Initiating Event Type	CCDP Scenario number	Failed Components	Area Propagated Into
IEV-1220AF01 4 43E-03	Yes 0 00			TB-1	0 00E+00	2 10E-09	0 00E+00	IEV-TRANS	SCEN15		None
	No 1 00	Yes 0 99		TB-2	0 00E+00	2 10E-09	0 00E+00	IEV-TRANS	2 10E-09	Loss of Division B Input to RCP Trip Switchgear and Divisions B and D Reactor Trip Signals, and CVS	None
		Propagates 0 01	None 0 99	TB-3	4 38E-05	2 70E-09	1 18E-13	IEV-TRANS	SCEN16	Loss of Division C Power and Control, Division B & C Input to RCP Trip Switchgear and Division B and D Reactor Trip Signals, CVS	1202 AF 03
			Hot Short 1 08E-02	TB-4	4 78E-07	1 25E-03	5 98E-10	IEV-SPADS	SCEN3C	Loss of Division C Power and Control, Division B & C Input to RCP Trip Switchgear and Divisions B and D Reactor Trip Signals, CVS, and Spurious Opening of ADS Stage 4 Valve V004A or V004C (LLOCA or SPADS)	1202 AF 03
						Total =	5 98E-10				

Note.
The probability of spurious opening (1 08E-02) in one division either stage 4 V004A (prob of 0 06x0 06) or stage 4 V004C (prob of 0 06x0 06) or stage 2 (V002A and V012A -prob of 0 06x0 06)

Figure 57C-17

1220 AF 01 Division B RCP Trip Switchgear/ Spare Room/Corridor 82' 6"

1220 AF02 Lower Annulus Valve Area

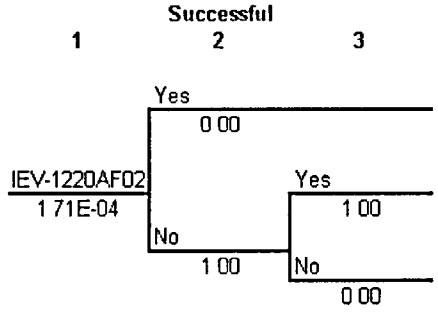

Fire Occurs in 1220 AF 02 1	Fire Suppression Successful 2	Fire Is Contained 3	Fire Scenario Number	Scenario IE Frequency	Conditional CDP	Scenario CDF	Initiating Event Type	CCDP Scenario number	Failed Components	Area Propagated Into
	Yes		TB-1	0 00E+00	2 10E-09	0 00E+00	IEV-TRANS	SCEN15	Loss of CVS and WLS Systems	
		Yes	TB-2	1 71E-04	2 10E-09	3 59E-13	IEV-TRANS	SCEN15	Loss of CVS and WLS Systems	None
					Total =	3 59E-13				

Note .
1 For these fire scenarios, a loss due to fire damage of WLS has a neglible impact.

Figure 57C-18

1220 AF 02 Lower Annulus Valve Area

1230 AF 01 Corridor Division A, B, C, D and Remote Shutdown Workstation

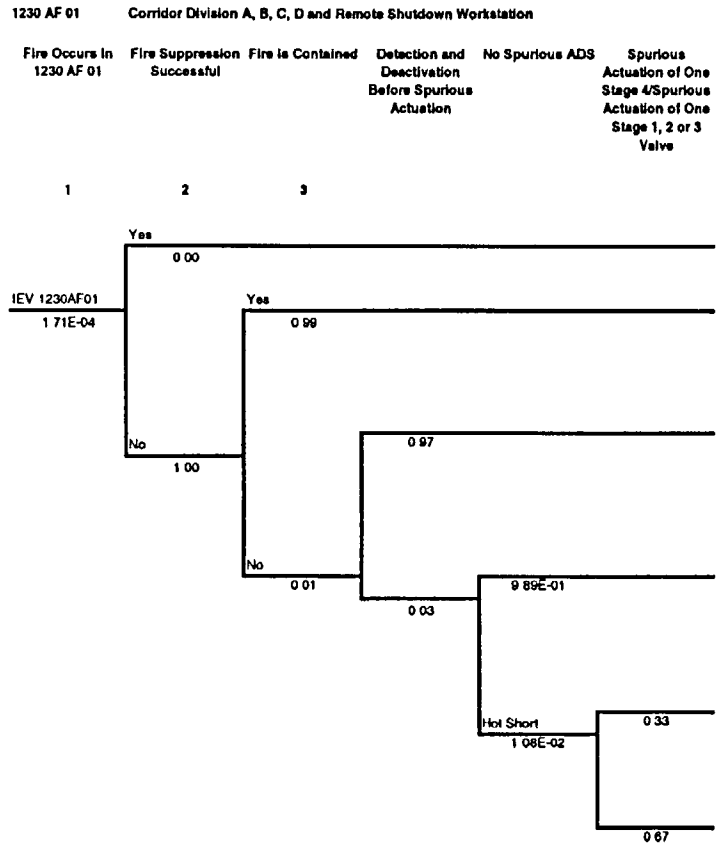

Fire Scenario Number	Scenario IE Frequency	Conditional CDP	Scenario CDF	Initiating Event Type	CCDP Scenario Number	Failed Components	Area Propagated Into
TB 1	0 00	0 00E+00	0 00E+00			No Significant Risk	
TB 2	1 69E-04	0 00E+00	0 00E+00			No Significant Risk	
TB 3	1 66E 06	2 70E-09	4 48E-15	IEV-TRANS	SCEN16	Loss of Div C (ADS V002A/V012A Inoperable By 1E-Division) Division C of Reactor Trip Switchgear	1202 AF 03
TB 3	5 07E-08	2 70E-09	1 37E-16	IEV-TRANS	SCEN16	Loss of Div C (ADS V002A/V012A Inoperable By 1E-Division) Division C of Reactor Ttrip Switchgear	1202 AF 03
TB 4	1 83E 10	8 07E-04	1 48E 13	IEV MLOCA	SCEN20B	Loss of Div C (ADS V002A/V012A Inoperable By 1E Division) Division C of Reactor Trip Switchgear Spurious Actuation of 1Stage 1 and/or 2 and/or 3 Valve (MLOCA)	1202 AF 03
TB 5	3 71E 10	1 25E-03	4 64E 13	IEV SPADS	SCEN25	Loss of Div C (ADS V002A/V012A Inoperable By 1E Division) Division C of Reactor Trip Switchgear Spurious Actuation of 1Stage 4 Valve (SPADS)	1202 AF 03
		Total =	8 12E-13				

Note
1 The probability of spurious actuation (1 08E-02) in Room C is 0 06x0 06 (V002B/V012B)+ 0 06x0 06 (V004A)+ 0 06x0 06 (V004C) and the proportion of failure is 0 33 for Stage 2 (1 valve) and 0 67 for Stage 4 (2 valves)
2 For Fire Scenario TB-3, it is conservatively assumed that there is a loss of Division C and CVS

Figure 57C-19

1230 AF 01 Corridor Division A, B, C, D and Remote Shutdown Workstation

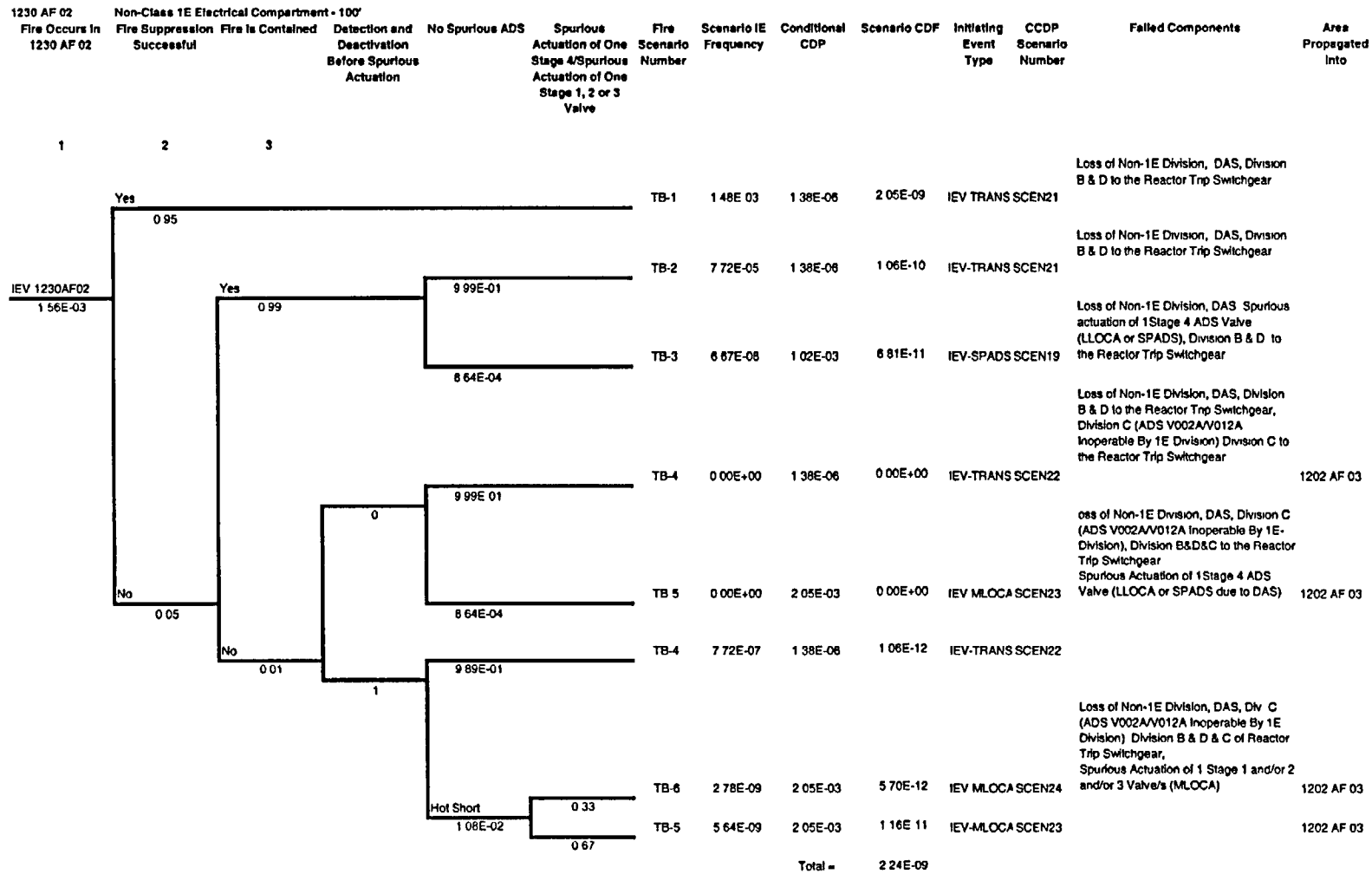

Notes

1 The probability of spurious actuation (1 08E-02) in Room C is 0 06x0 06 (V002B/V012B)+ 0 06x0 06 (V004C)+ 0 06x0 06 (V004A) and the proportion of failure is 0 33 for Stage 2 (1 valve) and 0 67 for Stage 4 (2 valves)

2 The probability of spurious actuation (8 64E 04) of Stage 4 is multiplied by 4 to account for the loss of all four Stage 4 valves due to hot shorts in the manual cables

3 Spurious actuation of the ADS valves is not credited in the fire scenario when a fire suppression system is available

Figure 57C-20

1230 AF 02 Non-Class 1E Electrical Compartment - 100'

1232 AF 01 Remote Shutdown Workstation

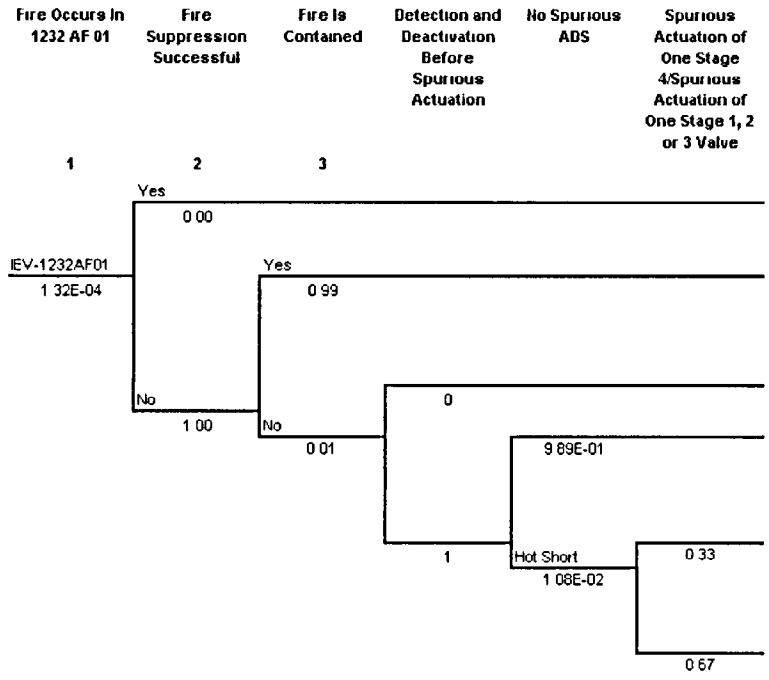

Fire Scenario Number	Scenario IE Frequency	Conditional CDP	Scenario CDF	Initiating Event Type	CCDP Scenario Number	Failed Components	Area Propagated Into
TB-1	0 00	0	0			No Risk	
TB-2	1 31E-04	0	0 00E+00			No Risk	
TB-3	0 00E+00	2 70E-09	0 00E+00	IEV-TRANS	SCEN16	Loss of Division C (ADS V002A/V012A Inoperable By 1E-Division), Division C to the Reactor Trip Switchgear	1202 AF 03
TB-3	1 31E-06	2 70E-09	3 53E-15	IEV-TRANS	SCEN16		
TB-4	4 70E-09	8 07E-04	3 80E-12	IEV-MLOCA	SCEN20B	Loss of Division C Spurious Opening of 1 ADS Stages 1 and/or 2 and/or 3 Valve (MLOCA), Division C to the Reactor Trip Switchgear	1202 AF 03
TB-5	9 55E-09	1 25E-03	1 19E-11	IEV-SPADS	SCEN25	Loss of Division C, Spurious Opening of 1 ADS Stages 4 Valve V004C (LLOCA or SPADS)	1202 AF 03
		Total =	1 57E-11				

Note

1 The probability of spurious actuation (1 08E-02) in Room C is 0 06x0 06 (V002B/V012B)+ 0 06x0 06 (V004C)+ 0 06x0 06 (V004A) and the proportion of failure is 0 33 for Stage 2 (1 valve) and 0 67 for Stage 4 (2 valves)

Figure 57C-21

1232 AF 01 Remote Shutdown Workstation

1240 AF 01 Non-Class 1E Electrical Compartment - 117'

Fire Occurs In 1240AF01	Fire Suppression Successful	Fire Is Contained	No Spurious ADS Stage 4	Fire Scenario Number	Scenario IE Frequency	Conditional CDP	Scenario CDF	Initiating Event Type	CCDP Scenario Number	Failed Components	Area Propagated Into
1	2	3	4								
IEV-1240AF01 1 55E-03	Yes 0 00			TB-1	0.00E+00	2.10E-09	0 00E+00	IEV-TRANS	None		None
	No 1.00	Yes 0 99		TB-2	0 00E+00	2.10E-09	0.00E+00	IEV-TRANS	None	Loss of Divisions A & C to the Reactor Trip Switchgear	None
		Propagates 0 01	None 0 99	TB-3	1.53E-05	2.70E-09	4.12E-14	IEV-TRANS	2.10E-09	Loss of Division A & C to the Reactor Trip Switchgear, Division A	1242 AF 02
			Hot Short 1.44E-02	TB-4	2 23E-07	1 25E-03	2.79E-10	IEV-SPADS	5 48E-04	Loss of Divisions A & C to the Reactor Trip Switchgear, Division A, Spurious Opening of One ADS Stage 4 Valve V004A or V004C (LLOCA or SPADS)	1242 AF 02
						Total =	2.79E-10				

Note:
1 The probability of spurious actuation (1.44E-02) in Room A is 0 06x0 06 (V001A/V011A)+ 0 06x0 06 (V003A/V013A)+0.06x0.06 (V004A)+ 0.06x0.06 (V004C)

Figure 57C-22

1240 AF 01 Non-Class 1E Electrical Compartment - 117'

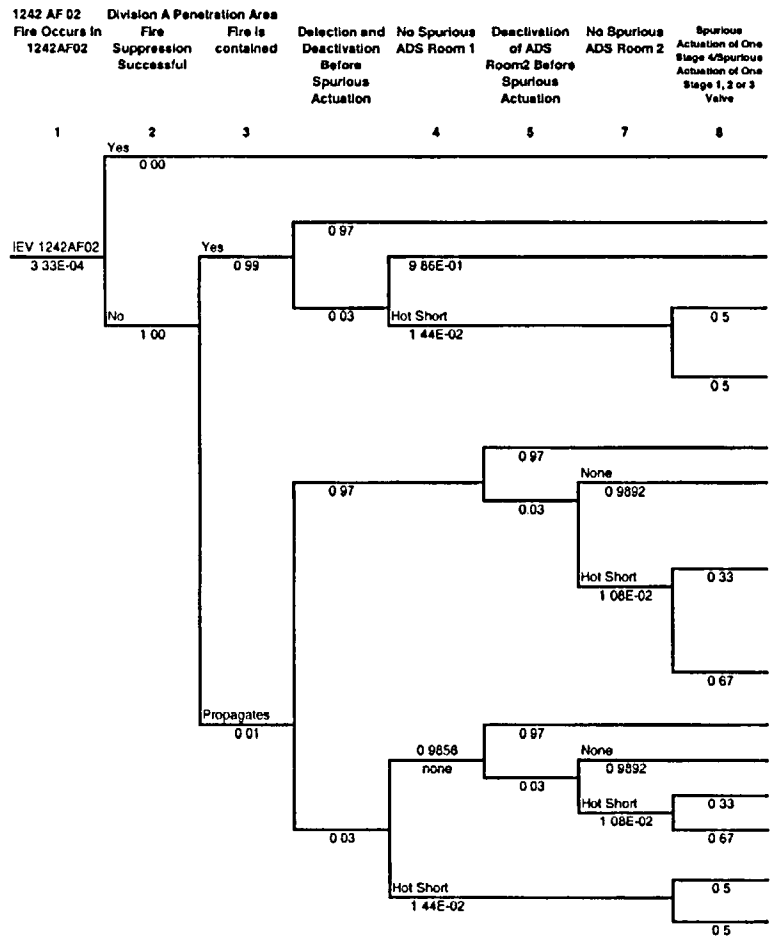

Fire Scenario Number	Scenario IE Frequency	Conditional CDP	Scenario CDF	Initiating Event Type	CCDP Scenario Number	Failed Components	Area Propagated Into
TB-1	0 00E+00	2 70E-09	0 00E+00	IEV-TRANS	SCEN14		None
TB-2	3.20E-04	2 70E-09	8 63E-13	IEV-TRANS	SCEN14	Loss of Division A (ADS V001A/V011A/V003A/V013A Inoperable By 1E Division)	None
TB-2	9 75E-06	2 70E-09	2 63E 14	IEV TRANS	SCEN14	See TB 2	
TB 3	7 12E-08	8 07E-04	5 75E 11	IEV MLOCA	SCEN20B	Loss of Division C, Spurious Opening of 1 ADS Stages 1 and/or 2 and/or 3 Valve (MLOCA)	None
TB-4	7 12E-08	1 25E-03	8 90E 11	IEV-SPADS	SCEN3C	Loss of Division A, Spurious Opening of 1 ADS Stages 4 Valve V004A (LLOCA or SPADS)	
TB-5	3 13E-06	2 70E-06	8 46E 12	IEV TRANS	SCEN11	Loss of Division A &C,(V001A/V0011A/V002A/V012A/V003A/V013A, V004A and V004C Inoperable By 1E-Division)	1202 AF 03
TB 5	9 59E-08	2 70E-06	2 59E-13	IEV TRANS	SCEN11	See TB 5	1202 AF 03
TB-6	3 45E 10	2 28E-03	7 87E 13	IEV MLOCA	SCEN9B	Loss of division A &C, spurious opening of one stage 1 and/or 2 and/or 3 (MLOCA),(V004A and V004C inoperable by 1E-division)	1202 AF 03
TB-7	7 01E 10	1 60E-03	1 12E 12	IEV SPADS	SCEN12	Loss of division A &C, spurious opening of V004C (LLOCA or SPADS - V004A and V002A/V0012A/V001A/V011A/V003A/V013A inoperable by 1E division)	1202 AF 03
TB-5	9 55E-08	2 70E-06	2 58E 13	IEV TRANS	SCEN11	See TB-5	1202 AF 03
TB-5	2 92E-09	2 70E-06	7 89E-15	IEV TRANS	SCEN11	See TB 5	1202 AF 03
TB-6	1 05E-11	2 28E-03	2 40E-14	IEV MLOCA	SCEN9B	See TB-6	1202 AF 03
TB-7	2 14E 11	1 60E-03	3 42E-14	IEV-SPADS	SCEN12	See TB 7	1202 AF 03
TB-6	7 19E 10	2 28E-03	1 64E-12	IEV-MLOCA	SCEN9B	See TB-6	1202 AF 03
TB-7	7 19E 10	1 60E-03	1 15E 12	IEV-SPADS	SCEN12	See TB 7	1202 AF 03
		Total =	1 61E 10				

Notes

1 The probability of spurious actuation (1 44E-02) in Room A is 0 06x0 06 (V001A/V011A)+ 0 06x0 06 (V003A/V013A)+ 0 06x0 06 (V004C)+ 0 06x0 06 (V004A), there are four valves with two valves being from Stages 1 through 3 and two from Stage 4 then the failure probability is split between the two group of stages or = 0 5
The probability of spurious actuation (1 08E 02) in Room C is 0 06x0 06 (V002B/V012B)+ 0 06x0 06 (V004C)+ 0 06x0 06 (V004A) and the proportion of failure is 0 33 for Stage 2 (1 valve) and 0 67 for Stage 4 (2 valves)
2 For Fire Scenario TB 2, manual fire suppression is not credited in AP1000 Fire PRA
3 For Fire Scenario TB 3, despite manual fire suppression and a 3-hour rated fire barrier, the fire may propagate because of a failure of the fire barrier
4 For Fire Scenario TB-4 5 and 6 probability to deactivate the electrical cabinets before ADS spurious actuation
5 For Fire Scenario TB 7 and 8, spurious actuation of any ADS valve in Room 2 and ADS Stage 1, 2, 3 or 4 respectively

Figure 57C-23

1242 AF 02 Division A Penetration Area

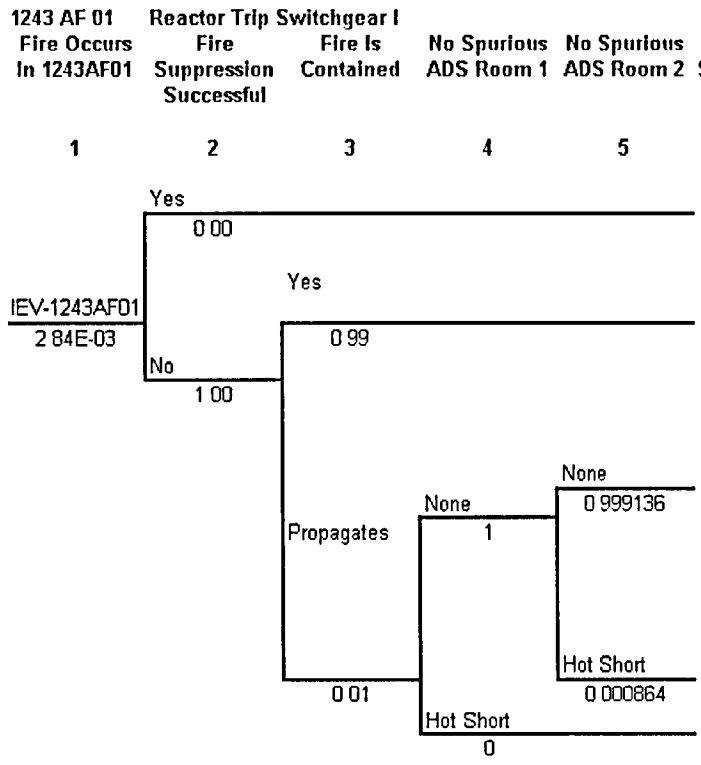

Fire Scenario Number	Scenario IE Frequency	Conditional CDP	Scenario CDF	Initiating Event Type	CCDP Scenario Number	Failed Components	Area Propagated Into
TB-1	0 00E+00	2 10E-09	0 00E+00	IEV-TRANS	None		None
TB-2	2 81E-03	2 10E-09	5 91E-12	IEV-TRANS	None	Reactor Trip Switchgear I	None
TB-3	2 84E-05	1 38E-06	3 92E-11	IEV-TRANS	SCEN21	Loss of Reactor Trip Switchgear I, Division B & D to the Reactor Trip Switchgear, DAS	1230 AF 02
TB-5	2 45E-08	1 02E-03	2 50E-11	IEV-SPADS	SCEN19	Loss of Reactor Trip Switchgear I, Division B & D to the Reactor Trip Switchgear, DAS, Spurious Opening of 1 Stage 4 ADS Valve (LLOCA or SPADS)	1230 AF 02
		Total =	7 01E-11				

Note
1 The probability of spurious opening (8 64E-04) of ADS Stage 4 in Room 1230 AF 01 is four times 0 06x0 06x0 06,

Figure 57C-24

1243 AF 01 Reactor Trip Switchgear I

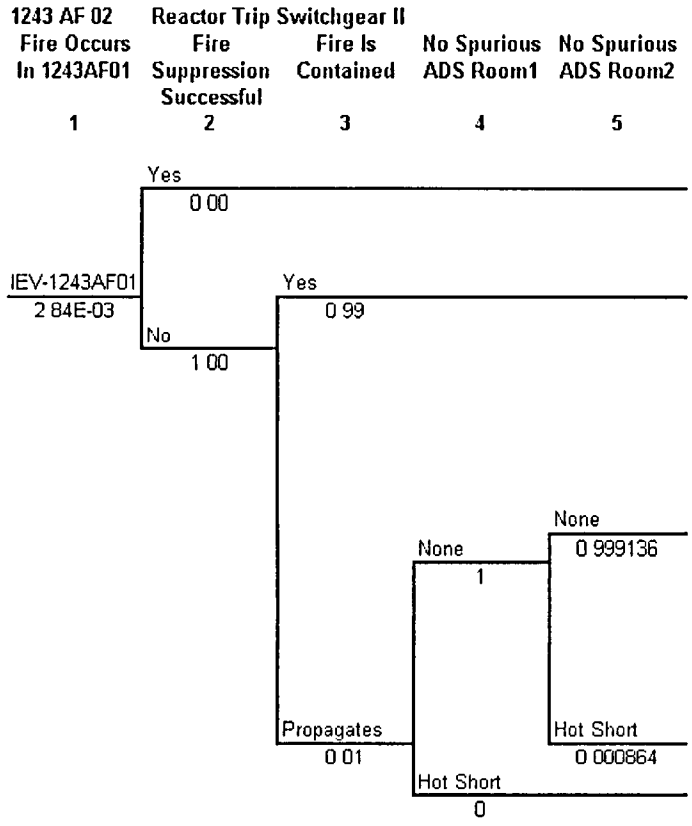

Fire Scenario Number	Scenario IE Frequency	Conditional CDP	Scenario CDF	Initiating Event Type	CCDP Scenario Number	Failed Components	Area Propagated Into
TB-1	0 00E+00	2 10E-09	0 00E+00	IEV-TRANS	None		None
TB-2	2 81E-03	2 10E-09	5 91E-12	IEV-TRANS	None	Loss of Reactor Trip Switchgear II	None None
TB-3	2 84E-05	2 70E-06	7 66E-11	IEV-TRANS	SCEN11A	Loss of Reactor Trip Switchgear II, Division B & D to the Reactor Trip Switchgear, Division B & D of I&C (= probable loss of Division B & D power and control in the model), DAS	1200 AF 03
TB-5	2 45E-08	1 60E-03	3 93E-11	IEV-SPADS	SCEN12A	Loss of Reactor Trip Switchgear I, Division B & D to the Reactor Trip Switchgear, Division B & D of I&C, DAS, Spurious Opening of 1 Stage 4 ADS Valve (LLOCA or SPADS)	1200 AF 03
		Total =	1 22E-10				

Notes

1 Probability of spurious actuation of Stage 4 is multiplied by 4 to represent all four Stage 4 valves

The spurious actuation due to hot shorts in manual cables = 4(06)(06)(06)

The spurious actuation due to hot shorts in manual cables = 0 000864

2 The loss of Division B & D cables in this area does not imply the loss of ADS, therefore, an assumption is made that there is only a spurious actuation of Stage 4 by DAS cables

To be not too conservative, the CCDP models the loss of B & D divisions with the DAS still being available

Figure 57C-25

1243 AF 02 Reactor Trip Switchgear II

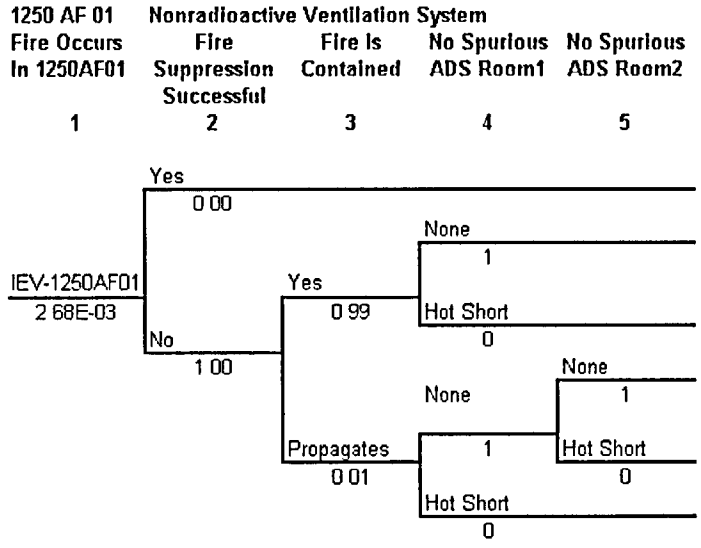

Fire Scenario Number	Scenario IE Frequency	Conditional CDP	Scenario CDF	Initiating Event Type	CCDP Scenario Number	Failed Components	Area Propagated Into
TB-1	0 00E+00	0 00E+00	0 00E+00			No Risk	None
TB-2	2 65E-03	0 00E+00	0 00E+00			No Risk	None
TB-3	2 68E-05	7 73E-08	2 07E-12	IEV-LMFW	SCEN26	Loss of MFW and SFW Systems	1243AF01
		Total =	2 07E-12				

Figure 57C-26

1250 AF 01 Nonradioactive Ventilation System

2000 AF 01 Turbine Building Floor

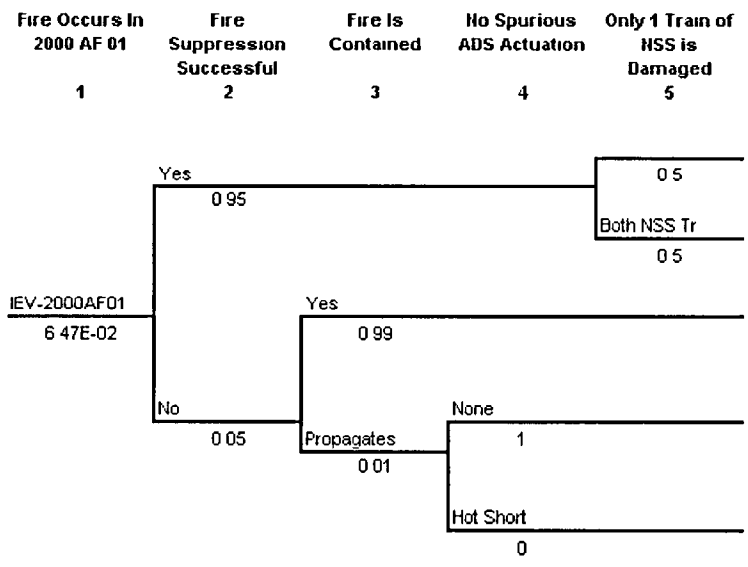

Fire Scenario Number	Scenario IE Frequency	Conditional CDP	Scenario CDF	Initiating Event Type	CCDP Scenario Number	Failed Components	Area Propagated Into
TB-1	3 07E-02	7 73E-08	2 38E-09	IEV-LMFW	SCEN1	Loss of 1 Train of MFW, SFW, CCW, SWS, and CAS	None
TB-2	3 07E-02	7 73E-08	2 38E-09	IEV-LMFW	SCEN1	Loss of MFW, SFW, CCW, SWS, and CAS	None
TB-3	3 20E-03	1 05E-07	3 36E-10	IEV-LOSP	SCEN4A	Loss of LOSP, MFW, SFW, CCW, SWS, and CAS	None
TB-4	3 24E-05	2 33E-07	7 54E-12	IEV-LOSP	SCEN5A	Loss of LOSP, MFW, SFW, CCW, SWS, and CAS, and Division D	1201 AF 04
TB-5	0 00E+00	2 33E-07	0 00E+00	IEV-LOSP	SCEN5A	Loss of LOSP, MFW, SFW, CCW, SWS, CAS, and Division D	1201 AF 04
		Total =	5 10E-09				

Notes

1 There are a total of five zones without fire suppression However, if fire propagates from any one of these zones, it will propagate into the rest of the Turbine hall, but not into an adjacent fire area Thus, these zones are treated as if the fire already propagated into the rest of the Turbine hall, for the purposes of question # 3 in the event tree

2 There are AC power cables along the outer wall of the Turbine Building (in the east) that may be affected by a severe fire on the turbine floor Thus, if suppression fails, LOSP is postulated to cover this possibility

3 This Event Tree credits the introduction of fire suppression systems in zones with NSS pumps to reduce fire propagation from one NSS train to the other Without these fire suppression systems, both NSS trains may be damaged by the fire

4 There is no possibility of a hot short by propagation from this area to another (see text of the calcnote)

5 For Fire Scenario TB-1, the CCDP is conservatively configured as encompassing the loss

Figure 57C-27

2000 AF 01 Turbine Building Floor

2003 AF 01 Auxiliary Boiler Equipment Room

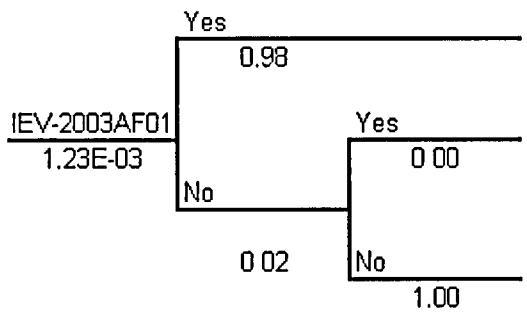

Fire Occurs In 2003 AF 01	Fire Suppression Successful	Fire Is Contained	Fire Scenario Number	Scenario IE Frequency	Conditional CDP	Scenario CDF	Initiating Event Type	CCDP Scenario Number	Failed Components	Area Propagated Into
1	2	3								
	Yes		TB-1	1.21E-03	0	0 00E+00			No Risk	
	0.98									
IEV-2003AF01		Yes	TB-2	0 00E+00	0 00E+00	0 00E+00			No Risk	
1.23E-03		0 00								
	No									
	0 02	No	TB-3	2 46E-05	1.02E-07	2.51E-12	IEV-LOSP	SCEN8	Loss of off-site power not recoverable	2053 AF 01
		1.00								
					Total =	2 51E-12				

Note
1 In case of a failure of the automatic fire suppression system in the exposing area, credit is not given to the fire barrier rating because of the high combustible loading in this fire area

Figure 57C-28

2003 AF 01 Auxiliary Boiler Equipment Room

2009 AF 02 Elevator Machine Room

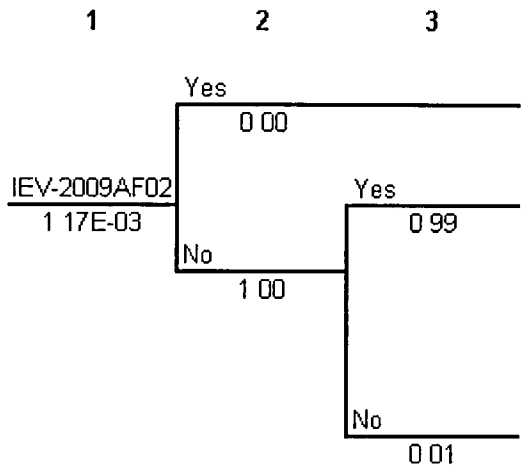

Fire Scenario Number	Scenario IE Frequency	Conditional CDP	Scenario CDF	Initiating Event Type	CCDP Scenario Number	Failed Components	Area Propagated Into
TB-1	0 00E+00	0	0.00E+00			No Risk	
TB-2	1 16E-03	0 00E+00	0 00E+00			No Risk	
TB-3	1.17E-05	1 02E-07	1 19E-12	IEV-LOSP	SCEN8	Loss of Off-Site Power	Outside of the Turbine Bldg to the East Due to the AC Cables
		Total =	1 19E-12				

Figure 57C-29

2009 AF 02 Elevator Machine Room

2033 AF 02 Motor-Driven Fire Pump Room

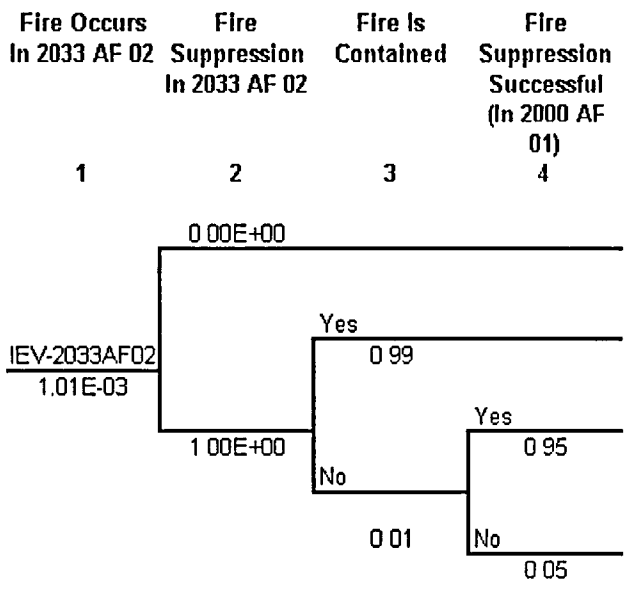

Fire Scenario Number	Scenario IE Frequency	Conditional CDP	Scenario CDF	Initiating Event Type	CCDP Scenario Number	Failed Components	Area Propagated Into
TB-1	0 00E+00	0	0 00E+00			No Risk	
TB-1	1 00E-03	0	0 00E+00			No Risk	
TB-2	9 60E-06	0 00E+00	0 00E+00			No Risk	
TB-3	5 05E-07	7 73E-08	3 90E-14	IEV-LMFW	SCEN1	Loss of SFW, CCW, SWS, and CAS	2000 AF 01
		Total =	3 90E-14				

Figure 57C-30

2033 AF 02 Motor-Driven Fire Pump Room

2040 AF 01 Clean and Dirty Lube Oil Storage

Fire Occurs In 2040 AF 01 1	Fire Suppression Successful (In 2040 AF 01) 2	Fire Suppression Successful (In 2000 AF 01) 3	Fire Scenario Number	Scenario IE Frequency	Conditional CDP	Scenario CDF	Initiating Event Type	CCDP Scenario Number	Failed Components	Area Propagated Into
IEV-2040AF01 2 83E-04	Yes 0.98		TB-1	2 77E-04	0	0 00E+00				
	No 0 02	Yes 0 95	TB-2	5 38E-06	0 00E+00	0 00E+00			No Risk	
		No 0 05	TB-3	2 83E-07	7 73E-08	2 19E-14	IEV-LMFW	SCEN1	Loss of SFW, CCW, SWS, and CAS	2000 AF 01
					Total =	2 19E-14				

Note

1 In case of a failure of the automatic fire suppression system in the exposing area, credit is not given to the fire barrier rating because of the very high combustible loading in this fire area

Figure 57C-31

2040 AF 01 Clean and Dirty Lube Oil Storage

2043 AF 01 Chemical Laboratory

Fire Occurs In 2043 AF 01	Fire Suppression Successful	Fire Is Contained	Fire Scenario Number	Scenario IE Frequency	Conditional CDP	Scenario CDF	Initiating Event Type	CCDP Scenario Number	Failed Components	Area Propagated Into
1	2	3								
IEV-2043AF01 3.23E-04	Yes 0 98		TB-1	3 17E-04	0 00E+00	0 00E+00			No Risk	
	No 0.02	Yes 0 99	TB-2	6 40E-06	0 00E+00	0 00E+00			No Risk	
		No 0 01	TB-3	6 46E-08	7 73E-08	4 99E-15	IEV-LMFW	SCEN1	Loss of SFW, CCW, SWS, and CAS	2053 AF 02
					Total =	4 99E-15				

Figure 57C-32

2043 AF 01 Chemical Laboratory

2050 AF 01 Lube Oil Conditioner Room

Fire Occurs In 2050 AF 01 1	Fire Suppression Successful (In 2050 AF 01) 2	Fire Suppression Successful (in 2000 AF 01) 3	Fire Scenario Number	Scenario IE Frequency	Conditional CDP	Scenario CDF	Initiating Event Type	CCDP Scenario Number	Failed Components	Area Propagated Into
IEV-2050AF01 2 83E-04	Yes 0 95		TB-1	2 69E-04	0 00E+00	0 00E+00				
	No	Yes 0 95	TB-2	1 34E-05	0 00E+00	0 00E+00			No Risk	
	0 05	No 0 05	TB-3	7 08E-07	7 73E-08	5 47E-14	IEV-LMFW	SCEN1	Loss of SFW, CCW, SWS, and CAS Systems	2000 AF 01
					Total =	5 47E-14				

Note:
1 In case of a failure of the automatic fire suppression system in the exposing area, credit is not given to the fire barrier rating because of the very high combustible loading in this fire area

Figure 57C-33

2050 AF 01 Lube Oil Conditioner Room

2052 AF 01 Southwest 6.9KV Switchgear Room

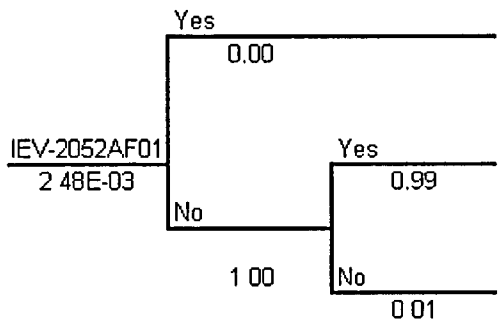

Fire Occurs in 2052 AF 01	Fire Suppression Successful	Fire Is Contained	Fire Scenario Number	Scenario IE Frequency	Conditional CDP	Scenario CDF	Initiating Event Type	CCDP Scenario Number	Failed Components	Area Propagated Into
	Yes		TB-1	0 00E+00	7 73E-08	0 00E+00	IEV-LMFW	SCEN1		
	No	Yes	TB-2	2.46E-03	7.73E-08	1 90E-10	IEV-LMFW	SCEN1	Loss of SFW, CCW, SWS, and CAS	None
	No	No	TB-3	2 48E-05	7 73E-08	1 92E-12	IEV-LMFW	SCEN1	Loss of SFW, CCW, SWS, and CAS	2053 AF 01
					Total =	1 92E-10				

Figure 57C-34

2052 AF 01 Southwest 6.9KV Switchgear Room

2053 AF 01 Electrical Equipment Room

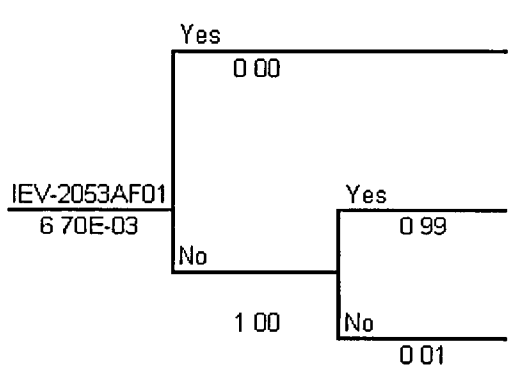

Fire Scenario Number	Scenario IE Frequency	Conditional CDP	Scenario CDF	Initiating Event Type	CCDP Scenario Number	Failed Components	Area Propagated Into
TB-1	0.00E+00	7 73E-08	0 00E+00	IEV-LMFW	SCEN1		
TB-2	6.63E-03	7 73E-08	5 13E-10	IEV-LMFW	SCEN1	Loss of SFW, CCW, SWS, and CAS	None
TB-3	6 70E-05	7 73E-08	5 18E-12	IEV-LMFW	SCEN1	Loss of SFW, CCW, SWS, and CAS	2053 AF 02 or 2052 AF
		Total =	5 18E-10				

Figure 57C-35

2053 AF 01 Electrical Equipment Room

2053 AF 02 Northwest 6.9KV Switchgear Room

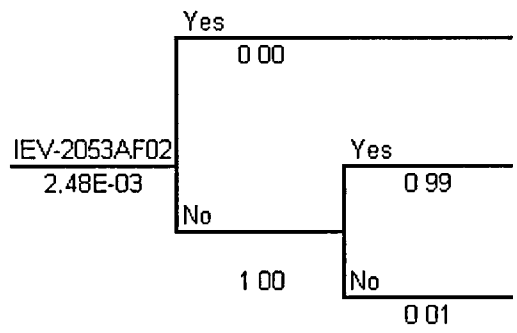

Fire Scenario Number	Scenario IE Frequency	Conditional CDP	Scenario CDF	Initiating Event Type	CCDP Scenario Number	Failed Components	Area Propagated Into
TB-1	0 00E+00	7 73E-08	0 00E+00	IEV-LMFW	SCEN1		
TB-2	2.46E-03	7.73E-08	1.90E-10	IEV-LMFW	SCEN1	Loss of SFW, CCW, SWS, and CAS	None
TB-3	2 48E-05	7 73E-08	1 92E-12	IEV-LMFW	SCEN1	Loss of SFW, CCW, SWS, and CAS	2053 AF 01
		Total =	1 92E-10				

Figure 57C-36

2053 AF 02 Northwest 6.9KV Switchgear Room

4003 AF 01 Demineralized Water Deoxygenating Room/Air Handling Equipment Rooms

Fire Occurs in 4003 AF 01	Fire Suppression Successful	Fire Is Contained	Fire Scenario Number	Scenario IE Frequency	Conditional CDP	Scenario CDF	Initiating Event Type	CCDP Scenario Number	Failed Components	Area Propagated Into
1	2	3								
IEV-4003AF01 4 26E-03	Yes 0 00		TB-1	0.00E+00	0 00E+00	0 00E+00			No Risk	
	No	Yes 0 99	TB-2	4 22E-03	0 00E+00	0 00E+00			No Risk	
	1 00	No 0 01	TB-3	4 26E-05	2 55E-09	1 09E-13	IEV-TRANS	SCEN15A	Loss of 2 trains of RNS and CVS	1200 AF 01
					Total =	1 09E-13				

Note:
1 For Fire Scenario TB-3, the fire damage causes the loss of 2 trains of RNS and CVS

Figure 57C-37

4003 AF 01 Demineralized Water Deoxygenating Room/ Air Handling Equipment Rooms

4031 AF 01 Battery Room and Battery Charger Room 1

Fire Occurs In 4031 AF 01	Fire Suppression Successful	Fire Is Contained	Fire Scenario Number	Scenario IE Frequency	Conditional CDP	Scenario CDF	Initiating Event Type	CCDP Scenario Number	Failed Components	Area Propagated Into
1	2	3								
IEV-4031AF01 2 87E-03	Yes 0 00		TB-1	0 00E+00	1 38E-06	0 00E+00	IEV-TRANS	SCEN22		None
	No	Yes 0 99	TB-2	2 84E-03	1 38E-06	3 92E-09	IEV-TRANS	SCEN22	Loss of 1 Group of Non-1E AC/DC Power, DAS (Induced By the Loss of One Non-1E Division	None
	1 00	No 0 01	TB-3	2 87E-05	1 38E-06	3 96E-11	IEV-TRANS	SCEN22	Loss of Non-1E AC/DC Power, DAS	4031 AF 02
					Total =	3 96E-09				

Note
1 For all three fire scenarios, the CCDPs are conservatively based on the loss of the entire non-1E power, the loss of DAS and the loss of Division C (no impact)

Figure 57C-38

4031 AF 01 Battery Room and Battery Charger Room 1

4031 AF 02 Battery Room and Battery Charger Room 2/Computer Room B/Shift Turnover Room

Fire Occurs In 4031 AF 02	Fire Suppression Successful	Fire Is Contained	Fire Scenario Number	Scenario IE Frequency	Conditional CDP	Scenario CDF	Initiating Event Type	CCDP Scenario Number	Failed Components	Area Propagated Into
1	2	3								
IEV-4031AF01 3 14E-03	Yes 0 00		TB-1	0 00E+00	1 38E-06	0 00E+00	IEV-TRANS	SCEN22		None
	No 1.00	Yes 0 99	TB-2	3.11E-03	1 38E-06	4 29E-09	IEV-TRANS	SCEN22	Loss of 1 Group of Non-1E AC/DC Power, DAS (Induced By the Loss of One Non-1E Division	None
		No 0 01	TB-3	3 14E-05	1 38E-06	4 33E-11	IEV-TRANS	SCEN22	Loss of Non-1E AC/DC Power, DAS	4031 AF 01
					Total =	4 33E-09				

Note
1 For all three fire scenarios, the CCDPs are conservatively based on the loss of the entire non-1E power, the loss of DAS and the loss of Division C (no impact)

Figure 57C-39

4031 AF 02 Battery Room and Battery Charger Room 2/ Computer Room B/Shift Turnover Room

4031 AF 05 Corridor/Spare battery Room/Spare Room /Spare Battery Charger Room

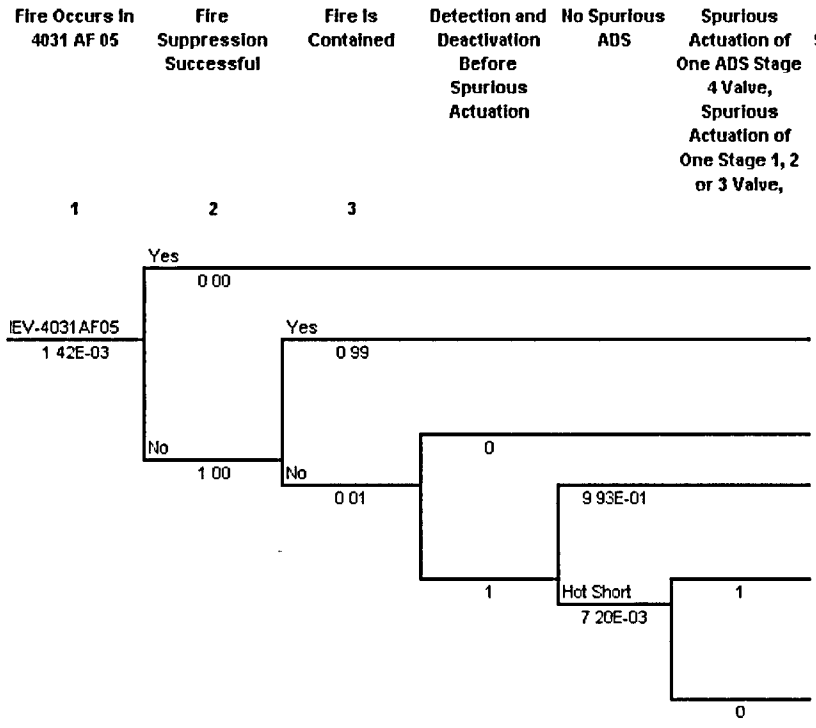

Fire Scenario Number	Scenario IE Frequency	Conditional CDP	Scenario CDF	Initiating Event Type	CCDP Scenario Number	Failed Components	Area Propagated Into
TB-1	0 00	0	0			No Risk	
TB-2	1 41E-03	0	0 00E+00			No Risk	
TB-3	0 00E+00	2 70E-09	0 00E+00	IEV-TRANS	SCEN14	Loss of Division A (ADS V001A/V011A/V003A/V013A Inoperable By 1E-Division)	1202 AF 04
TB-3	1 41E-05	2 70E-09	3 81E-14	IEV-TRANS	SCEN14		
TB-4	1 02E-07	8 07E-04	8.25E-11	IEV-MLOCA	SCEN20C	Loss of Division A, Spurious Opening of 1 ADS Stages 1 and/or 2 and/or 3 Valve (MLOCA)	1202 AF 04
TB-5	0 00E+00	1 25E-03	0 00E+00	IEV-SPADS	SCEN3C	Loss of Division A, Spurious Opening of 1 ADS Stages 4 Valve V004A (LLOCA or SPADS)	1202 AF 04
		Total =	8 25E-11				

Note
1 The probability of spurious actuation (7 20E-03) in Room A is 0 06x0 06 (V001A/V011A)+ 0 06x0 06 (V003A/V013A) and all is attributable to Stages 1 and 3, therefore, the entire failure is credited towards those stages

Figure 57C-40

4031 AF 05 Corridor/Spare Battery Room/ Spare Room/Spare Battery Charger Room

4031 AF 06 Central Alarm Station/Security Room 1

Fire Occurs In 4031 AF 06	Fire Suppression Successful	Fire Is Contained	Fire Scenario Number	Scenario IE Frequency	Conditional CDP	Scenario CDF	Initiating Event Type	CCDP Scenario Number	Failed Components	Area Propagated Into
1	2	3								
IEV-4031AF06 1 93E-03	Yes 0 00		TB-1	0 00E+00	0.00E+00	0 00E+00			No Risk	
	No 1 00	Yes 0.99	TB-2	1 91E-03	0 00E+00	0 00E+00			No Risk	
		No 0 01	TB-3	1 93E-05	1 38E-06	2.66E-11	IEV-TRANS	SCEN22	Loss of 1 Group of Non-1E AC/DC Power, DAS (Induced By the Loss of One Non-1E Division)	4031 AF 01
					Total =	2 66E-11				

Note
1 For Fire Scenari TB-3, the CCDP is conservatively based on the loss of the entire non-1E power, the loss of DAS and the loss of Division C (no impact)

Figure 57C-41

4031 AF 06 Central Alarm Station/Security Room 1

4032 AF 01 Decontamination Room, Non-Radiological and Radiological Controlled Area Entry/Exit Area

Fire Occurs In 4032 AF 01	Fire Suppression Successful	Fire Is Contained	Fire Scenario Number	Scenario IE Frequency	Conditional CDP	Scenario CDF	Initiating Event Type	CCDP Scenario Number	Failed Components	Area Propagated Into
1	2	3								
IEV-4032AF01 8 53E-04	Yes 0 00		TB-1	0 00E+00	2 10E-09	0 00E+00	IEV-TRANS	None		
	No 1 00	Yes 0 99	TB-2	8 44E-04	2 10E-09	1 78E-12	IEV-TRANS	None	Loss of 1 Group of Non-1E AC/DC Power	
		No 0 01	TB-3	8 53E-06	1 38E-06	1 18E-11	IEV-TRANS	SCEN22	Loss of Non-1E AC/DC (Manual DAS Available)	4042 AF 01
					Total =	1 35E-11				

Note
1 For all three fire scenarios, the CCDPs are conservatively based on the loss of the entire non-1E power, the loss of DAS and the loss of Division C (no impact)
2 For Fire Scenarios TB-1 and TB-2, the loss of 1 non-1E group is not risk significant as it is not the power supply itself (ie batteries)

Figure 57C-42

4032 AF 01 Decontamination Room, Non-Radiological and Radiological Controlled Area Entry/Exit Area

4032 AF 02 Containment Access Corridor Elevation 107'-2"

Fire Occurs In 4032 AF 02	Fire Suppression Successful	Fire Is Contained	Fire Scenario Number	Scenario IE Frequency	Conditional CDP	Scenario CDF	Initiating Event Type	CCDP Scenario Number	Failed Components	Area Propagated Into
1	2	3								
IEV-4032AF02 4 38E-04	Yes 0 98		TB-1	4 29E-04	0	0 00E+00				
	No 0.02	Yes 0 99	TB-2	8 67E-06	0 00E+00	0 00E+00			No Risk	
		No 0 01	TB-3	8 76E-08	1 38E-06	1 21E-13	IEV-TRANS	SCEN22	Loss of Group 2 of Non-1E AC/DC Power (Manual DAS Available)	4032 AF 01
					Total =	1 21E-13				

Note
1 For Fire Scenario TB-3, the CCDP is conservatively based on the loss of the entire non-1E power, the loss of DAS and the loss of Division C (no impact)

Figure 57C-43

4032 AF 02 Containment Access Corridor Elevation 107' 2"

4033 AF 01 Hot Machine Shop

Fire Occurs In 4033 AF 01	Fire Suppression Successful	Fire Is Contained	Fire Scenario Number	Scenario IE Frequency	Conditional CDP	Scenario CDF	Initiating Event Type	CCDP Scenario Number	Failed Components	Area Propagated Into
1	2	3								
IEV-4033AF01 1.67E-03	Yes 0 00		TB-1	0 00E+00	0	0 00E+00				
	No	Yes 0 99	TB-2	1 65E-03	0 00E+00	0 00E+00			No Risk	
	1 00	No 0 01	TB-3	1 67E-05	1 38E-06	2 30E-11	IEV-TRANS	SCEN22	Loss of one train of RNS and CVS	1200 AF 01
					Total =	2 30E-11				

Note:
1 For Fire Scenario TB-3, the CCDP is conservatively based on the loss of the entire non-1E power, the loss of DAS and the loss of Division C (no impact)

Figure 57C-44

4033 AF 01 Hot Machine Shop

4034 AF 01 General Offices

Fire Occurs In 4034 AF 01	Fire Suppression Successful	Fire Is Contained	Fire Scenario Number	Scenario IE Frequency	Conditional CDP	Scenario CDF	Initiating Event Type	CCDP Scenario Number	Failed Components	Area Propagated Into
1	2	3								
IEV-4034AF01 1 42E-03	Yes 0.00		TB-1	0 00E+00	0 00E+00	0 00E+00				
	No 1 00	Yes 0 99	TB-2	1 41E-03	0 00E+00	0 00E+00			No Risk	
		No 0 01	TB-3	1 42E-05	1 38E-06	1 96E-11	IEV-TRANS	SCEN22	Loss of 1 Group of Non-1E AC/DC Power, DAS (Induced By the Loss of One Non-1E Division	4031 AF 01
					Total =	1 96E-11				

Note
1 For Fire Scenario TB-3, the CCDP is conservatively based on the loss of the entire non-1E power, the loss of DAS and the loss of Division C (no impact)

Figure 57C-45

4034 AF 01 General Offices

4041 AF 01 Conference Rooms/Computer Room A/Corridor

Fire Occurs In 4041 AF 01 1	Fire Suppression Successful 2	Fire Is Contained 3	Fire Scenario Number	Scenario IE Frequency	Conditional CDP	Scenario CDF	Initiating Event Type	CCDP Scenario Number	Failed Components	Area Propagated Into
IEV-4041AF01 4 66E-04	Yes 0 00		TB-1	0 00E+00	2 10E-09	0	IEV-TRANS	None		
	No 1 00	Yes 1 00	TB-2	4 66E-04	2 10E-09	9 80E-13	IEV-TRANS	None	Loss of 1 Group of Non-1E AC/DC Power, Automatic DAS	
		No 0 00								
					Total =	9 80E-13				

Note
1 For Fire Scenarios TB-1 and TB-2, the loss of 1 non-1E group is not risk significant as it is not the power supply itself (ie batteries)

Figure 57C-46

4041 AF 01 Conference Rooms/Computer Room A/Corridor

4041 AF 02 Corridor/Restroom

Fire Occurs In 4041 AF 02	Fire Suppression Successful	Fire Is Contained	Fire Scenario Number	Scenario IE Frequency	Conditional CDP	Scenario CDF	Initiating Event Type	CCDP Scenario Number	Failed Components	Area Propagated Into
1	2	3								
IEV-4041AF02 4.50E-04	Yes 0 00		TB-1	0 00E+00	2 10E-09	0 00E+00	IEV-TRANS	None	Loss of 1 Group of Non-1E AC/DC Power, Automatic DAS	
	No 1 00	Yes 0.99	TB-2	4.46E-04	2.10E-09	9 37E-13	IEV-TRANS	None	Loss of 1 Group of Non-1E AC/DC Power, Automatic DAS	
		No 0.01	TB-3	4 50E-06	1 38E-06	6 21E-12	IEV-TRANS	SCEN22	Loss of Non-1E AC/DC Power (Induces Loss of DAS)	4031 AF 02
					Total =	7 15E-12				

Note
1 For Fire Scenario TB-3, the CCDP is conservatively based on the loss of the entire non-1E power, the loss of DAS and the loss of Division C (no impact)
2 For Fire Scenarios TB-1 and TB-2, the loss of 1 non-1E group is not risk significant as it is not the power supply itself (ie batteries)

Figure 57C-47

4041 AF 02 Corridor/Restroom

4042 AF 01 Non-Class 1E Switchgear #1

Fire Occurs In 4042 AF 02	Fire Suppression Successful	Fire Is Contained	Fire Scenario Number	Scenario IE Frequency	Conditional CDP	Scenario CDF	Initiating Event Type	CCDP Scenario Number	Failed Components	Area Propagated Into
1	2	3								
IEV-4042AF01 8 34E-03	Yes 0 00		TB-1	0 00E+00	2 10E-09	0 00E+00	IEV-TRANS	None	Loss of 1 Group of Non-1E AC/DC Power	
	No 1 00	Yes 0 99	TB-2	8 26E-03	2 10E-09	1 74E-11	IEV-TRANS	None	Loss of 1 Group of Non-1E AC/DC Power	
		No 0 01	TB-3	8 34E-05	1 38E-06	1 15E-10	IEV-TRANS	SCEN22	Loss of Non-1E AC/DC Power (Induces Loss of DAS)	4031 AF 02
					Total =	1.32E-10				

Note.
1 For Fire Scenario TB-3, the CCDP is conservatively based on the loss of the entire non-1E power, the loss of DAS and the loss of Division C (no impact)
2 For Fire Scenarios TB-1 and TB-2, the loss of 1 non-1E group is not risk significant as it is not the power supply itself (ie batteries).

Figure 57C-48

4042 AF 01 Non-Class 1E Switchgear #1

4042 AF 02 Non-Class 1E Switchgear #2

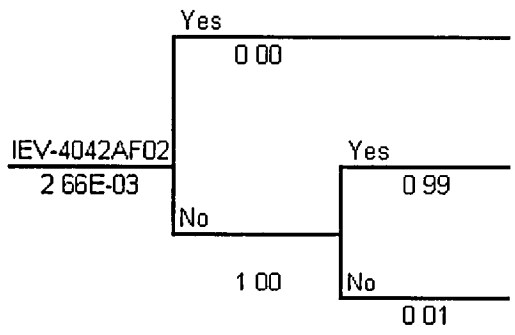

Fire Scenario Number	Scenario IE Frequency	Conditional CDP	Scenario CDF	Initiating Event Type	CCDP Scenario Number	Failed Components	Area Propagated Into
TB-1	0 00E+00	2 10E-09	0 00E+00	IEV-TRANS	None		
TB-2	2 63E-03	2.10E-09	5 54E-12	IEV-TRANS	None	Loss of 1 Group of Non-1E AC/DC Power	
TB-3	2 66E-05	1 38E-06	3 67E-11	IEV-TRANS	SCEN22	Loss of Non-1E AC/DC Power	4042 AF 01
		Total =	4 22E-11				

Note
1 For Fire Scenario TB-3, the CCDP is conservatively based on the loss of the entire non-1E power, the loss of DAS and the loss of Division C (no impact)
2 For Fire Scenarios TB-1 and TB-2, the loss of 1 non-1E group is not risk significant as it is not the power supply itself (ie batteries)

Figure 57C-49

4042 AF 02 Non-Class 1E Switchgear #2

4052 AF 01 Staging and Storage Area/Containment Air Filtration Exhaust Rooms A & B

Fire Occurs In 4052 AF 01	Fire Suppression Successful	Fire Is Contained	Fire Scenario Number	Scenario IE Frequency	Conditional CDP	Scenario CDF	Initiating Event Type	CCDP Scenario Number	Failed Components	Area Propagated Into
1	2	3								
IEV-4052AF01 1 94E-03	Yes 0 00		TB-1	0 00E+00	0 00E+00	0 00E+00			No Risk	
	No	Yes 0 99	TB-2	1 92E-03	0 00E+00	0 00E+00			No Risk	
	1 00	No 0 01	TB-3	1 94E-05	2 10E-09	4 08E-14	IEV-TRANS	None	Loss of Group 1 of Non-1E AC/DC Power	4042 AF 01
					Total =	4 08E-14				

Note
1 For Fire Scenario TB-3, the CCDP is conservatively based on the loss of the entire non-1E power, the loss of DAS and the loss of Division C (no impact)

Figure 57C-50

4052 AF 01 Staging and Storage Area/ Containment Air Filtration Exhaust Rooms A & B

5031 AF 01 Radwaste Building

Fire Occurs In 5031 AF 01	Fire Suppression Successful	Fire Is Contained	Fire Scenario Number	Scenario IE Frequency	Conditional CDP	Scenario CDF	Initiating Event Type	CCDP Scenario Number	Failed Components	Area Propagated Into
1	2	3								
	Yes 0 95		TB-1	2 30E-02	0 00E+00	0 00E+00				
IEV-5031AF01 2 42E-02		Yes 0 99	TB-2	1 20E-03	0.00E+00	0 00E+00			No Risk	
	0 05	No 0.01	TB-3	1 21E-05	2 55E-09	3 08E-14	IEV-TRANS	SCEN15A	Loss of One RNS Train and Loss of CVS	1200 AF 01
					Total =	3 08E-14				

Figure 57C-51

5031 AF 01 Radwaste Building

6030 AF 01 Diesel Generator Room A

Fire Occurs In 6030 AF 01	Fire Suppression Successful	Fire Is Contained	Fire Scenario Number	Scenario IE Frequency	Conditional CDP	Scenario CDF	Initiating Event Type	CCDP Scenario Number	Failed Components	Area Propagated Into
1	2	3								
IEV-6030AF01 2 99E-02	Yes 0 83		TB-1	2 47E-02	0 00E+00	0 00E+00			No Risk (Loss of 1Diesel Generator)	
		Yes 0.99	TB-2	5.15E-03	0 00E+00	0 00E+00			No Risk (Loss of 1Diesel Generator)	
	No 0 17	No 0 01	TB-3	5 20E-05	2 10E-09	1 09E-13	IEV-TRANS	SCEN41	Loss of 2 Diesel Generators	6030 AF 02
					Total =	1 09E-13				

Note

1. Propagation is assumed only in case where the fire starts from the diesel generator and the automatic fire suppression system fails (2 6E-02x0 05) or in case the fire starts anywhere else (3 9E-3) Then the equivalent probability of failure of automatic fire suppression system is.

Pfailure = (Diesel Generator Fire Ignition Frequency x Fire Suppression System Unavailability) + Surrounding Area Fire Ignition Frequency/Diesel Generator Room A Fire Ignition Frequency

Pfailure = (0.026 x 0 05) + (3 9E-03)/2 99E-02

Pfailure = 1 74E-01

Figure 57C-52

6030 AF 01 Diesel Generator Room A

6030 AF 02 Diesel Generator Room B

Fire Occurs In 6030 AF 02 1	Fire Suppression Successful 2	Fire Is Contained 3	Fire Scenario Number	Scenario IE Frequency	Conditional CDP	Scenario CDF	Initiating Event Type	CCDP Scenario Number	Failed Components	Area Propagated Into
IEV-6030AF02 3.03E-02	Yes 0.81		TB-1	2 46E-02	0.00E+00	0.00E+00			No Risk (Loss of 1Diesel Generator)	
	No 0 19	Yes 0 99	TB-2	5 64E-03	0 00E+00	0 00E+00			No Risk (Loss of 1Diesel Generator)	
		No 0 01	TB-3	5 70E-05	2.10E-09	1 20E-13	IEV-TRANS	SCEN41	Loss of 2 Diesel Generators	6030 AF 01
					Total =	1 20E-13				

Note

1. Propagation is assumed only in case where the fire starts from the diesel generator and the automatic fire suppression system fails (2 6E-02x0 05) or in case the fire starts anywhere else (4.4E-3) within DG Room B Then the equivalent probability of failure of automatic fire suppression system is

Pfailure = (Diesel Generator Fire Ignition Frequency x Fire Suppression System Unavailability) + Surrounding Area Fire Ignition Frequency/Diesel Generator Room B Fire Ignition Frequency

Pfailure = (0 026 x 0 05) + (4 4E-03)/3 03E-02

Pfailure = 1 88E-01

Figure 57C-53

6030 AF 02 Diesel Generator Room B

6030 AF 03 Fuel Oil Day Tank Room A

Fire Occurs In 6030 AF 03 1	Fire Suppression Successful 2	Fire Is Contained 3	Fire Scenario Number	Scenario IE Frequency	Conditional CDP	Scenario CDF	Initiating Event Type	CCDP Scenario Number	Failed Components	Area Propagated Into
IEV-6030AF03 2 10E-04	Yes 0 95		TB-1	2 00E-04	0 00E+00	0 00E+00			No Risk (Loss of 1 DG)	
	No	Yes 0 00	TB-2	0 00E+00	0 00E+00	0 00E+00			No Risk (Loss of 1 DG)	
	0 05	No 1.00	TB-3	1 05E-05	2.10E-09	2 21E-14	IEV-TRANS	SCEN41	Loss of 2 Diesel Generators	6030 AF 01 & 6030 AF 02
					Total =	2.21E-14				

Note.
1. In case of a failure of the automatic fire suppression system in the exposing area, credit is not given to fire barrier rating because of the very high combustible loading in this fire area

Figure 57C-54

6030 AF 03 Fuel Oil Day Tank Room A

6030 AF 04 Fuel Oil Day Tank Room B

Fire Occurs In 6030 AF 04	Fire Suppression Successful	Fire Is Contained	Fire Scenario Number	Scenario IE Frequency	Conditional CDP	Scenario CDF	Initiating Event Type	CCDP Scenario Number	Failed Components	Area Propagated Into
1	2	3								
IEV-6030AF04 2 10E-04	Yes 0 95		TB-1	2 00E-04	0.00E+00	0 00E+00				
	No	Yes 0.00	TB-2	0 00E+00	0 00E+00	0.00E+00			No Risk (Loss of 1 DG)	
	0 05	No 1.00	TB-3	1 05E-05	2 10E-09	2 21E-14	IEV-TRANS	SCEN41	Loss of 2 Diesel Generators	6030 AF 01 & 6030 AF 02
					Total =	2 21E-14				

Note:
1 In case of a failure of the automatic fire suppression system in the exposing area, credit is not given to fire barrier rating because of a very high combustible loading in this fire area

Figure 57C-55

6030 AF 04 Fuel Oil Day Take Room B

1100 AF 11204 Reactor Coolant Drain Tank Room

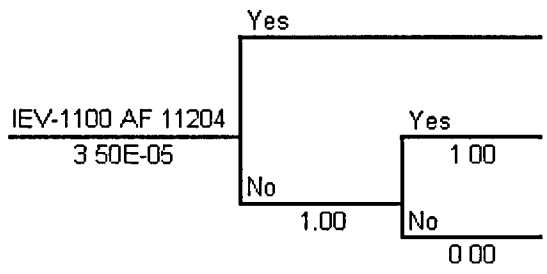

Fire Occurs In 1100 AF 11204	Fire Suppression Successful	Fire Is Contained	Fire Scenario Number	Scenario IE Frequency	Conditional CDP	Scenario CDF	Initiating Event Type	CCDP Scenario Number	Failed Components	Area Propagated Into
	Yes		TB-1							None
	No	Yes	TB-2	3 50E-05	2 10E-09	7 36E-14	IEV-TRANS	None	Loss of WLS	
		No	TB-3							
					Total =	7 36E-14				

Note·
1 The loss of the WLS is not risk significant

Figure 57C-56

1100 AF 11204 Reactor Coolant Drain Tank Room

1100 AF 11206 Accumulator Room A

Fire Occurs in 1100 AF 11206	Fire Suppression Successful	Fire Is Contained	Fire Scenario Number	Scenario IE Frequency	Conditional CDP	Scenario CDF	Initiating Event Type	CCDP Scenario Number	Failed Components	Area Propagated Into
1	2	3								
IEV-1100 AF 11206 1 81E-05	Yes 0 00									
	No 1.00	Yes 1.00	TB-1	1 81E-05	2.10E-09	3 80E-14	IEV-TRANS	SCEN29	Loss of All Valves Supplied By Division B & D in the Zone (Loss of IRWST Valves V117A, V118A, V120A, V123A, V125A)	None
		No 0 00								
			Total =	1 81E-05		3 80E-14				

Figure 57C-57

1100 AF 11206 Accumulator Room A

1100 AF 11207 Accumulator Room B

Fire Occurs In 1100 AF 11207	Fire Suppression Successful	Fire Is Contained	Fire Scenario Number	Scenario IE Frequency	Conditional CDP	Scenario CDF	Initiating Event Type	CCDP Scenario Number	Failed Components	Area Propagated Into
1	2	3								
IEV-1100 AF 11207 1 81E-05	Yes 0 00									
	No 1 00	Yes 1 00	TB-1	1 81E-05	2.10E-09	3.80E-14	IEV-TRANS	SCEN29	Loss of all the valves supplied by A&C divisions in the zone (loss of IRWST valves V117B, V118B, V120B, V123B, V125B)	None
		No 0 00								
			Total =	1.81E-05		3 80E-14				

Figure 57C-58

1100 AF 11207 Accumulator Room B

1100 AF 11208 RNS Valve Room

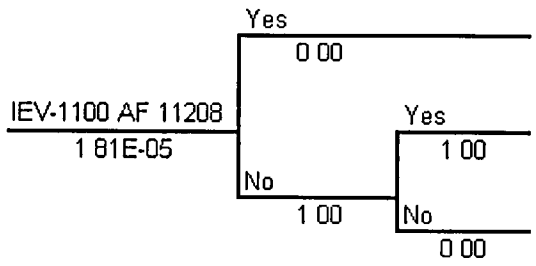

Fire Scenario Number	Scenario IE Frequency	Conditional CDP	Scenario CDF	Initiating Event Type	CCDP Scenario Number	Failed Components	Area Propagated Into
TB-1	1 81E-05	2 55E-09	4 62E-14	IEV-TRANS	SCEN30	Loss of RNS-MOV-023	None
Total =	1 81E-05		4 62E-14				

Figure 57C-59

1100 AF 11208 RNS Valve Room

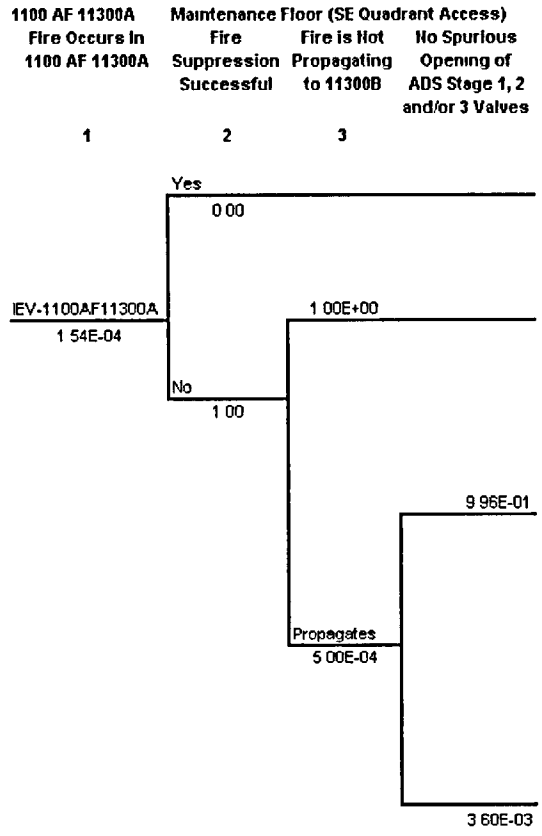

Fire Scenario Number	Scenario IE Frequency	Conditional CDP	Scenario CDF	Initiating Event Type	CCDP Scenario Number	Failed Components	Area Propagated Into
TB-1	0 00E+00	7 34E-08	0 00E+00	IEV-LMFW	SCEN31	Loss of One CMT, MFW and SFW Systems	None
TB-2	1 54E-04	7 34E-08	1 13E-11	IEV-LMFW	SCEN31	Loss of One CMT, MFW and SFW Systems	None None
TB-3	7 67E-08	4 81E-04	3 69E-11	IEV-LMFW	SCEN32	Loss of Division A & C, Non-1E Division, DAS, 2 CMTs, One PRHR Isolation Valve, One CCW Path, MFW and SFW Systems	1100 AF 11300 B
TB-4	2 77E-10	1 00E+00	2 77E-10	None	None	Loss of Division A & C, Non-1E Division, DAS, 2 CMTs, One PRHR Isolation Valve, One CCW Path, MFW and SFW Systems, Spurious Opening of One ADS Stage 1, 2 or 3 Valve	1100 AF 11300 B
		Total =	3 25E-10				

Notes

1 Propagation to Fire Zone 1100 AF 11300B is possible only if there is a fire suppression system failure

Pfailure = Probability of Fire Propagation to an Adjacent Area x Fire Suppression System Unavailability

Pfailure = (0 01 x 0 05)

Pfailure = 5 00E-04

2. If the fire suppression system fails and the fire propagates to Fire Zone 1100 AF 11300B, a loss of all components within 1100 AF 11300B will result and the conditional core damage probability will be set to failure (1 00E+00)

3 Spurious actuation of one ADS Stage 1, 2 or 3 valve is equivalent to a hot short across two cables (0 06 x 0 06) = 3 60E-03

Figure 57C-60

1100 AF 11300A Maintenance Floor (SE Quadrant Access)

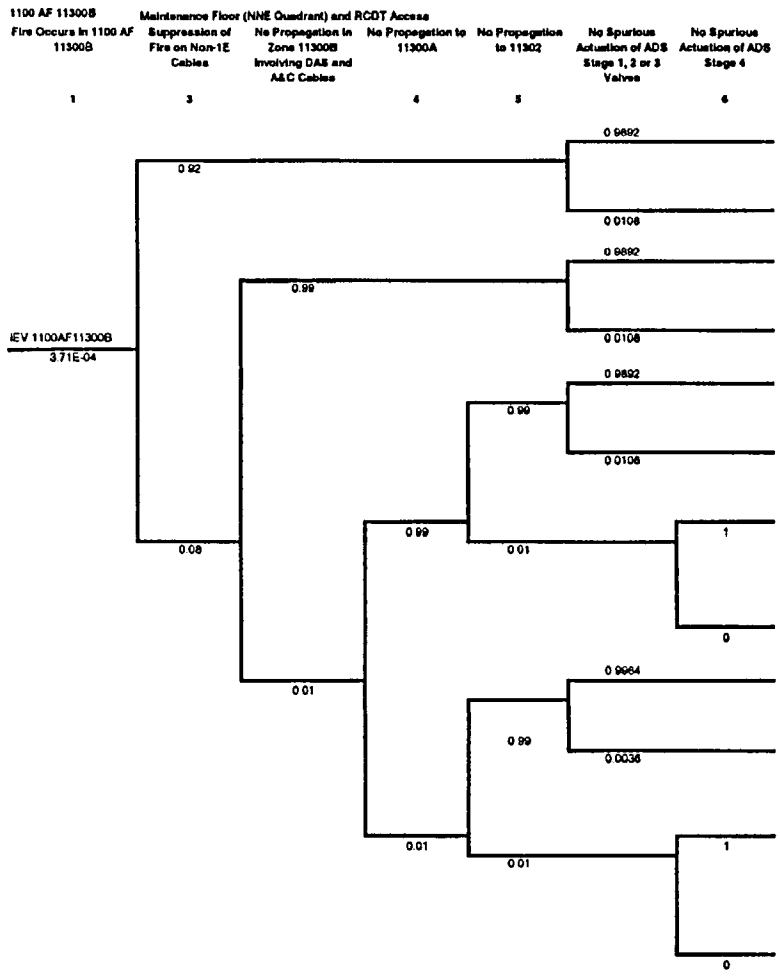

Fire Scenario Number	Scenario IE Frequency	Conditional CDF	Scenario CDF	Initiating Event Type	CCDP Scenario Number	Failed Components	Zone Propagated Into
CT300B 1	3.38E-04	2.46E-06	8.31E-10	IEV TRANS	SCEN33	Loss of Division A & C 1CMT One PRHR Isolation Valve and One CCS Path	None
CT300B-2	3.69E-06	2.28E-03	8.40E-09	IEV MLOCA	SCEN13	Loss of Division A & C 1CMT One PRHR Isolation Valve One CCS Path, Spurious Opening of One ADS Stage 1 2 or 3 Valve	None
CT300B 1	2.91E-06	2.46E-06	7.15E-11	IEV TRANS	SCEN33	Loss of Division A & C 1CMT One PRHR Isolation Valve, and One CCS Path	None
CT300B-2	3.17E-07	2.28E-03	7.24E-10	IEV-MLOCA	SCEN13	Loss of Division A & C 1CMT, One PRHR Isolation Valve, One CCS Path, Spurious Opening of One ADS Stage 1, 2 or 3 Valve	None
CT300B-3	2.88E-07	2.46E-06	7.08E-13	IEV TRANS	SCEN33	Loss of Division A & C, Non-1E Cables, DAS Cables, 1CMT, one PRHR Isolation Valve, and One CCS Path	None
CT300B-4	3.14E-09	1.00E+00	3.14E-09	IEV-MLOCA	SCEN45	Loss of Division A & C, Non-1E Cables, DAS Cables, 1CMT, one PRHR Isolation Valve, and One CCS Path, Spurious Opening of One ADS Stage 1, 2 or 3 Valve	None
CT300B-5	2.94E-09	4.81E-04	1.41E-12	IEV-LMFW	SCEN32	Loss of Division A & C, Non-1E Cables, DAS Cables, 1CMT, Unavailability of 2 ADS Stage 4 Valves, loss of MFWS, SFWS, One PRHR Isolation Valve, and One CCS Path	11302
CT300B 6	0.00E+00	2.50E-03	0.00E+00	IEV-SPADS	SCEN42	Loss of Division A & C, Non-1E Cables, DAS Cables, 1CMT, Unavailability of 2 ADS Stage 4 Valves and Spurious Opening of 1 ADS Stage 4 Valve (V004A or V004C Supplied By Division A & C), Loss of MFWS, SFWS, One PRHR Isolation Valve, and One CCS Path	11302
CT300B-7	2.93E-09	2.46E-06	7.20E-15	IEV TRANS	SCEN33	Loss of Division A & C 2 CMTs Non 1E cables, DAS Cables, One PRHR Isolation Valve and One CCS Path	11300A
CT300B-8	1.06E-11	1.00E+00	1.06E-11	IEV MLOCA	SCEN45	Loss of Division A & C, 2 CMTs, Non 1E cables, DAS Cables, One PRHR Isolation Valve, and One CCS Path, Spurious Opening of One ADS Stage 1, 2 or 3 Valve	11300A
CT300B-9	2.97E-11	4.81E-04	1.43E-14	IEV-LMFW	SCEN32	Loss of Division A & C, 2 CMTs, Non 1E cables, DAS Cables, One PRHR Isolation Valve, and One CCS Path, Unavailability of 2 ADS Stage 4 Valves (V004A or V004C supplied by divisions A &C), and Loss of SFW, MFW Systems	11300A, 11302
CT300B 10	0.00E+00	1.00E+00	0.00E+00	IEV-SPADS	SCEN34	Loss of Division A & C 2 CMTs, Non 1E cables, DAS Cables, One PRHR Isolation Valve, and One CCS Path, Spurious Opening of One ADS Stage 4 Valve (V004A or V004C supplied by divisions A &C), Unavailability of the other ADS Stage 4 Valve, and loss of SFW MFW Systems	11300A, 11302
		Total =	1.32E-08				

Note

1 A manual fire water flow valve must be manually opened to allow fire water to reach the fire suppression system.

2 Spurious actuation of one ADS valve caused by a hot short across two cables = (0.06 x 0.06) = 3.60E-03

2 Spurious actuation of three ADS valves caused by hot shorts across two cables = 3 x (0.06 x 0.06) = 1.08E-02

Figure 57C-61

1100 AF 11300B Maintenance Floor (NNE Quadrant) and RCDT Access

1100 AF 11301 SG Compartment 1

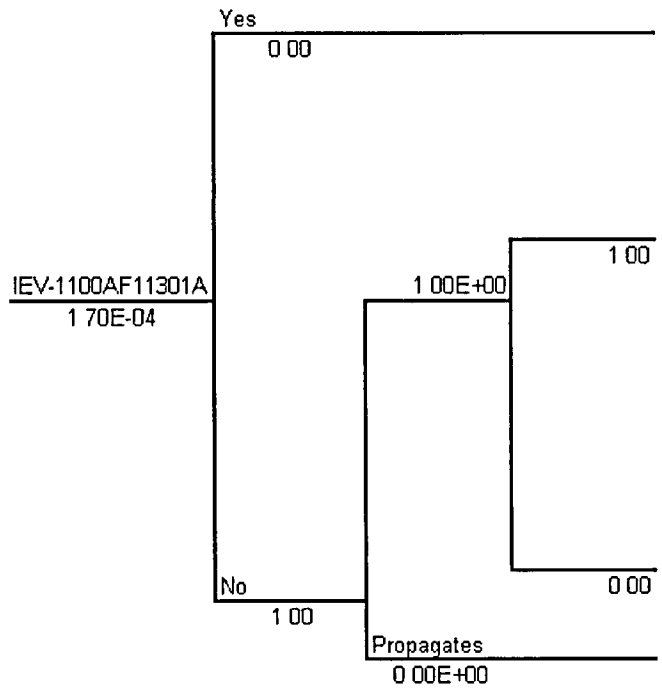

Fire Scenario Number	Scenario IE Frequency	Conditional CDP	Scenario CDF	Initiating Event Type	CCDP Scenario Number	Failed Components	Area Propagated Into
TB-1	1 70E-04	7 73E-08	1 31E-11	IEV-LMFW	SCEN26	Loss of MFW and SFW Systems 2 ADS Stage 4 (V004B&V004D) Squib Valves Unavailable	
TB-2	0 00E+00	5 48E-04	0 00E+00	IEV-SPADS	None	Loss of MFW and SFW Systems 1 ADS Stage 4 (V004B & V004D) Squib Valve Unavailable and Spurious Opening of the Other ADS Stage 4 Squib Valve	
		Total =	1 31E-11				

Figure 57C-62

1100 AF 11301 SG Compartment 1

1100 AF 11302 SG Compartment 2

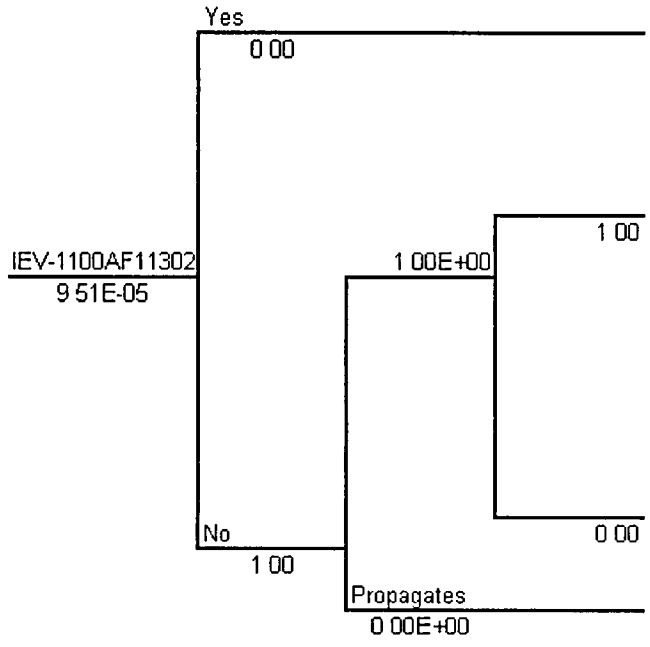

Fire Scenario Number	Scenario IE Frequency	Conditional CDP	Scenario CDF	Initiating Event Type	CCDP Scenario number	Failed Components	Fire Propagated Into
TB-1	9 51E-05	7 73E-08	7 35E-12	IEV-LMFW	SCEN26	loss of MFW, SFW and 2 squib valves of ADS stage 4 (V004A&V004C) unavailable	
TB-2	0 00E+00	5 48E-04	0 00E+00	IEV-SPADS	None	loss of MFW, SFW, 1 squib valves of ADS stage 4 (V004A or V004C) unavailable, spurious opening of 1 squib valve of ADS stage 4	
		Total =	7 35E-12				

Figure 57C-63

1100 AF 11302 SG Compartment 2

1100 AF 11303 Pressurizer Compartment

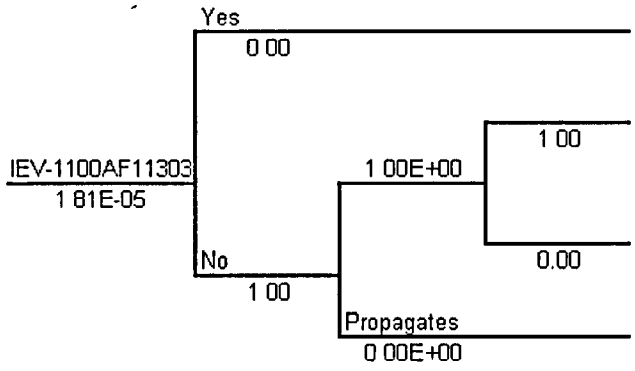

Fire Scenario Number	Scenario IE Frequency	Conditional CDP	Scenario CDF	Initiating Event Type	CCDP Scenario number	Failed Components	Fire Propagated Into
TB-1	1 81E-05	2 10E-09	3 81E-14	IEV-TRANS	None	Loss of Auto Actuation of CMTs	
		Total =	3 81E-14				

Figure 57C-64

1100 AF 11303 Pressurizer Compartment

1100 AF 11303A ADS Lower Valve Area

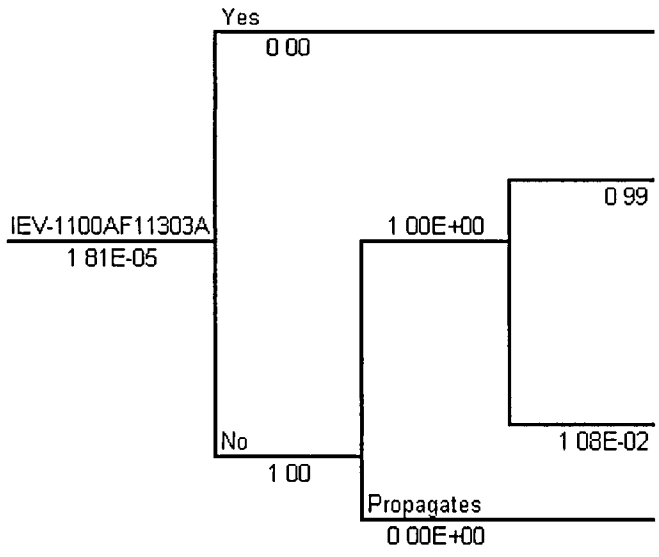

Fire Scenario Number	Scenario IE Frequency	Conditional CDP	Scenario CDF	Initiating Event Type	CCDP Scenario number	Failed Components	Fire Propagated Into
TB-1	1 79E-05	2 99E-09	5 35E-14	IEV-TRANS	SCEN35	Loss of 1 ADS Stage 1, 2 and 3 Valves Cause by Cable Damage	
TB-2	1 95E-07	4 03E-05	7 88E-12	IEV-MLOCA	SCEN36	Unavailability of 1 ADS Stage 1, 2 and 3 Valve and Spurious Opening of At Least One of Them	
		Total =	7 93E-12				

Note
1 Spurious actuation probability (1 08E-02) caused by fire induced hot shorts involves 3 valves and two cables or 3 x (0 06 x 0 06) = 1 08E-02

Figure 57C-65

1100 AF 11303A ADS Lower Valve Area

1100 AF 11303B ADS Upper Valve Area

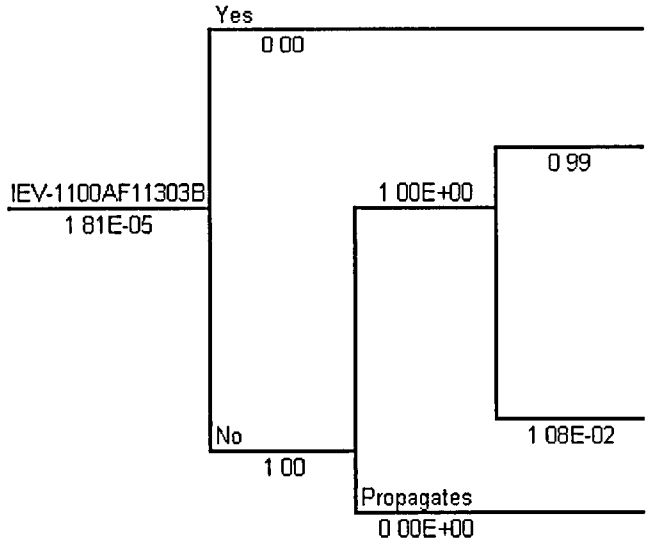

Fire Scenario Number	Scenario IE Frequency	Conditional CDP	Scenario CDF	Initiating Event Type	CCDP Scenario number	Failed Components	Fire Propagated Into
TB-1	1 79E-05	2 99E-09	5 35E-14	IEV-TRANS	SCEN35	Unavailability of 1 ADS Stage 1, 2 and 3 Valves	
TB-2	1 95E-07	4 03E-05	7 88E-12	IEV-MLOCA	SCEN36	Unavailability of 1 ADS Stage 1, 2 and 3 Valves and Spurious Opening of at Least One of Them	
		Total =	7 93E-12				

Note·
1 Spurious actuation probability (1 08E-02) caused by fire induced hot shorts involves 3 valves and two cables or 3 x (0 06 x 0 06) = 1 08E-02

Figure 57C-66

1100 AF 11303B ADS Upper Valve Area

1100 AF 11500 Operating Deck

Fire Occurs In 1100 AF 11500	Fire Starts In Transformers = Yes Fire Starts Elsewhere = No	Fire Is Not Propagating	No Spurious Opening of Stages 1, 2 and/or 3 Valves	Fire Scenario Number	Scenario IE Frequency	Conditional CDP	Scenario CDF	Initiating Event Type	CCDP Scenario number	Failed Components	Fire Propagated Into
1	2	3	4								
IEV-1100AF11500 4 92E-04	Yes 0 27			CT500-1	1 33E-04	7 73E-08	1 03E-11	IEV-LMFW	SCEN1	Loss of MFW and SFW Systems	
		1 00E+00	0 99	CT500-2	3 55E-04	1 08E-06	3 84E-10	IEV-LMFW	SCEN37	Loss of Division B & D (ADS valves unavailable), and Loss of MFW & SFW Systems	
	No 0 73		1 08E-02	CT500-3	3 88E-06	2 28E-03	8 84E-09	IEV-MLOCA	SCEN9A	Loss of Division B & D (ADS valves unavailable), Spurious Opening of at Least One ADS Stage 1, 2, and/or 3, and Loss of MFW & SFW Systems	
		Propagates 0 00E+00									
						Total =	9 24E-09				

notes
1 Spurious actuation probability (1 08E-02) caused by fire induced hot shorts that open the ADS Stage 1 &/or 2 &/or 3 Valves = 3 x (0 06x0 06)
2 Propagation to the Division B & D, from a transformer fire, is not possible because of the distance separating the transformers from the Division B & D cables
3 The 0 73 corresponds to fire ignition frequency of the transformers divided by the total fire ignition frequency in the fire zone
4 The Fire Scenario TB-1 is conservatively assumed as a loss of MFW, SFW, CCW, SWS, and the CAS Systems
5 If a fire starts in a transformers, it is assumed that it can not propagate to the Division B & D cables due to the distance separating the transformers from the Division B & D cables

Figure 57C-67

1100 AF 11500 Operating Deck

1200 AF 12341 Middle Annulus

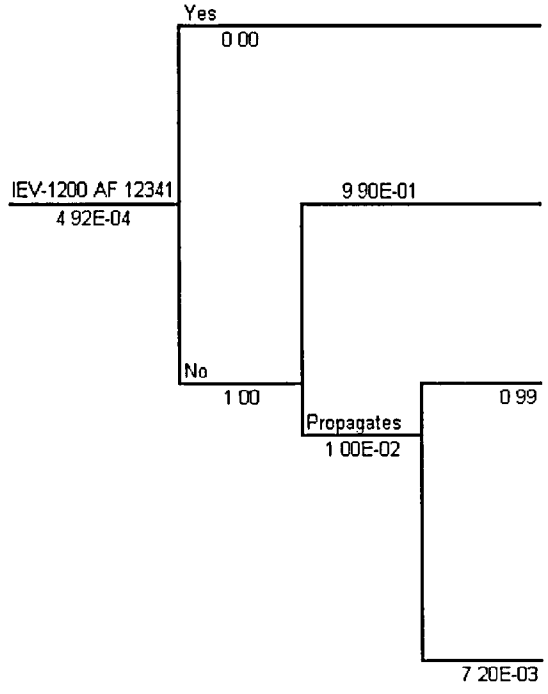

Fire Scenario Number	Scenario IE Frequency	Conditional CDP	Scenario CDF	Initiating Event Type	CCDP Scenario number	Failed Components	Fire Propagated Into
CT341-1	4 87E-04	1 38E-06	6 72E-10	IEV-TRANS	SCEN22	Loss of Non-1E Electrical Division to the Containment and DAS	
CT341-2	4 88E-06	1 38E-06	6 74E-12	IEV-TRANS	SCEN22	Loss of Division A, Non-1E Electrical Division to the Containment, and DAS	
CT-341-3	3 54E-08	1 94E-03	6 87E-11	IEV-MLOCA	SCEN39	Loss of Division A, Non-1E Electrical Division to the Containment, DAS, and Spurious Actuation of ADS Stage 1, 2 or 3 Valves	
		Total =	7 55E-11				

Note
1 The spurious actuation probability (7 20E-03) caused by fire induced hot shorts is 2 valves and 2 cables = 2 x (0 06 x 0 06)

Figure 57C-68

1200 AF 12341 Middle Annulus

1200 AF12555 Main Control Room Emergency Habitability System Air Storage/Operating Deck Staging Area

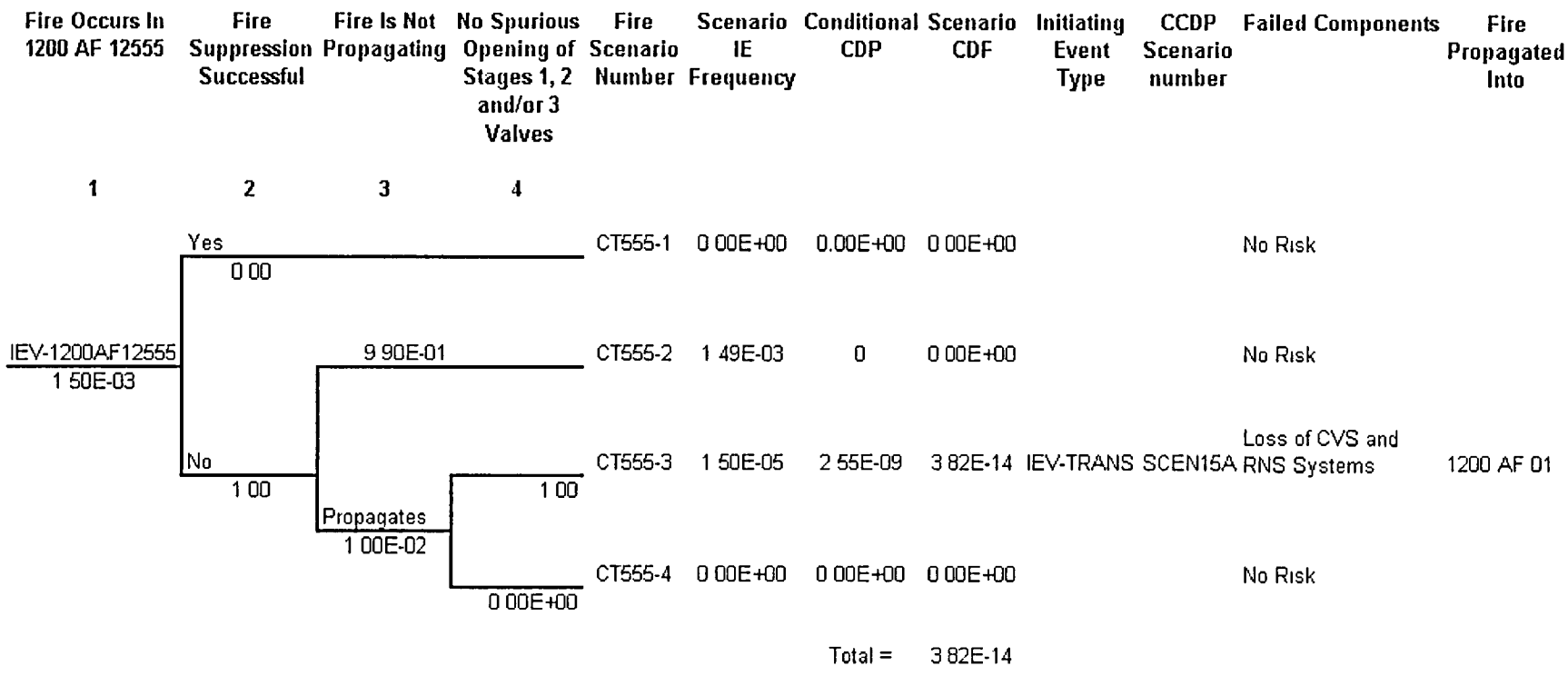

Figure 57C-69

1200 AF 12555 Main Control Room Emergency Habitability System Air Storage/Operating Deck Staging Area

ATTACHMENT 57D

AP1000 POTENTIAL FOR FIRE-INDUCED SPURIOUS ACTUATION OF FUNCTIONS THAT RESULT IN A BREACH OF HIGH/LOW PRESSURE BOUNDARY

The functions that could result in a breach of the high/low pressure boundary are ADS valve actuation, RV head vent valve actuation, and ADS system level actuation.

Control Room

Soft Controls

Most control room controls use soft-controls which communicate over multiplexed data channels. There are no fire-induced failures modes associated with soft controls that lead to spurious actuation.

Dedicated Safety Panel Switches

For the few hard control devices in the control room, there are cases where actuation of the manual controls results in a breach of the high/low pressure boundary. In these cases, 2 out of 2 logic is required; i.e., two switches must be actuated at the same time in order for the actuation to take place. There are two safety panels located in the control room. One is located adjacent to the reactor operator's desk and one adjacent to the SRO desk. For actuation that results in a breach of high/low pressure boundary, spurious actuation from the dedicated switches is required at each of the two safety panels. The separation provided by these locations (approximately 10 feet) is such that a fire initiating in one panel will not spread to the other panel before the operator can take action to extinguish the fire and to disable the panels at the transfer switches.

Each safety panel contains two switches for the following system-level actuations. Manual system-level actuation is achieved by simultaneous operator actuation of one of the corresponding switches at both panels.

- ADS Stages 1-3 actuation
- ADS Stage 4 actuation
- IRWST injection
- Containment recirculation/IRWST dump to containment
- RNS isolation

Each safety panel actuation circuit is two-pole, energize-to-actuate, ungrounded dc. PMS inputs only recognize an energize signal of proper polarity; therefore, spurious actuation of one circuit requires two hot shorts of proper polarity. Onerous actuation requires four hot shorts of proper polarity (two shorts for each safety panel).

Each safety panel also contains a switch for opening and closing each head vent valve (4 switches per panel). Each switch is a three-position, hold-in-position switch (open-neutral-close). If both switches associated with a valve are in the neutral position, soft control of that valve from the operator's console is allowed. If both switches are in the open position, the valve opens. Either switch in the close position closes the valve. If one switch is in neutral position and one in the open position, the valve holds its previous position but soft control is defeated. Onerous actuation requires eight hot shorts of proper polarity (two shorts for each safety panel per valve times two valves). Soft control from the remote shutdown workstation is enabled by the transfer switch action to defeat the safety panels.

The transfer switches on the route to the remote shutdown workstation disable all actuations from the safety panels following a control room evacuation. These transfer switches send signals to the four divisions of the protection and safety monitoring system in the four division I&C rooms. The protection and safety monitoring system ignores any further signals from the control room following receipt of the transfer signal.

DAS Panel

A normally-off master enable switch for the manual DAS panel is located on the reactor operator's desk. For manual DAS actuation, the operator must first turn on the actuation power at the operator's desk before using the DAS panel. The separation provided by these locations (approximately 15 feet) is such that a fire initiating in one location will not spread to the other location before the operator can extinguish the fire and disable the DAS panel. The master enable switch provides two normally-open contacts to interrupt both poles of the ungrounded dc actuation power to the DAS panel. The master enable switch is located on the center panel of the reactor operator's console between the two operator positions.

Each DAS manual actuation circuit is two-pole energize-to-actuate, ungrounded dc. After the DAS is energized, at least two manual actuation circuits are required to cause any DAS manual function.

- Two switches are provided for ADS Stage 1. One switch opens the gate valves. The other switch opens the globe valves. The two-out-of-two voting requirement for DAS is met by the fluid system configuration of two series valves.

- Two switches are provided for ADS Stage 2. One switch opens the gate valves. The other switch opens the globe valves. The two-out-of-two voting requirement for DAS is met by the fluid system configuration of two series valves.

- Two switches are provided for ADS Stage 3. One switch opens the gate valves. The other switch opens the globe valves. The two-out-of-two voting requirement for DAS is met by the fluid system configuration of two series valves.

- Two switches are provided for ADS Stage 4. For ADS Stage 4 actuation, the "arm" switch must be actuated, held for a few seconds, released, then the "actuate" switch actuated.

The master disable switch for the DAS panel, included with the transfer switches on the route to the remote shutdown workstation, removes power from the DAS panel following a control room evacuation. The master disable switch provides two normally-closed contacts to interrupt both poles of the ungrounded dc actuation power to the DAS panel.

Power to indicators on the DAS panel is limited to 4-20 mA loop power. The DAS actuation circuits require more power than is available from 4-20 mA loop power supplies so that a hot short from a DAS indicator circuit to an actuation circuit will not cause a spurious actuation.

Remote Shutdown Workstation

The remote shutdown workstation uses soft-controls that communicate over multiplexed data channels. There are no fire-induced failures modes associated with soft controls that lead to spurious actuation.

Division I&C Rooms

Sensor Cables used for Automatic Actuation

Fire-induced spurious actuation of the automatic actuation circuits due to fires in the division I&C rooms requires a fires in at least two division I&C rooms. If fires exist in two or more I&C rooms, then multiple shorts in two rooms could produce a spurious actuation. For example, hot shorts of proper impedance could produce false low-pressurizer pressure signals in both divisions resulting in an automatic CMT actuation (2-out-of-4 divisions). Following the CMT actuation, a spurious automatic ADS signal could be produced if hot shorts in both divisions generate low CMT level signals. This spurious actuation scenario requires fires in two I&C divisions, then two hot shorts of proper impedance for false, but valid, signals in the 4-20 mA loops. The short in the 4-20 mA circuit must have an impedance that gives a spurious signal that is in the valid range for that loop. The PMS system rejects the first out-of-range signal and simply place that channel in bypass. The second division with a spurious signal (either out of range or in range) results in a partial trip for that channel (1-out-of-4) but no actuation (2-out-of-4 not satisfied). A hot short of proper impedance is a low-probability event. Also, as the spurious signals are occurring, the DDS alarms, informing the operator that the redundant channels are not in agreement. The operator should respond to this alarm. Fire-induced spurious actuation that results in a breach of high/low pressure boundary is not credible for this scenario.

Manual Actuation Cables

Most control room controls use soft-controls which communicate over multiplexed data channels. There are no fire-induced failures modes associated with soft controls that lead to spurious actuation.

For actuation that results in a breach of high/low pressure boundary, actuation from the dedicated switches requires action at each of the two safety panels. Each safety panel actuation circuit is two-pole, energize-to-actuate, ungrounded dc. PMS inputs only recognize an energize signal of proper polarity; therefore, spurious actuation of one circuit requires two

hot shorts of proper polarity. Onerous actuation requires four hot shorts of proper polarity (two shorts for each circuit).

PMS Cabinets

A fire inside an I&C cabinet can produce a false output signal with a hot short on an output card. For spurious ADS, hot shorts would be required on output cards in two different PMS output cabinets.

For spurious head vent operation, hot shorts would be required on output cards in two different PMS divisions, one short in each of two divisions.

Cables from PMS Cabinets/DAS Panel to Motor Control Center (MOV Control)

MOV actuation circuits are two-pole, energize-to-actuate, ungrounded dc. Spurious actuation of one circuit requires two hot shorts of proper polarity. Onerous actuation of Stage 1, 2, or 3 ADS requires four hot shorts of proper polarity (two shorts for each MOV).

Cables from PMS Cabinets/DAS Panel to Squib Valve Controller Cabinet

Squib valve arm/actuate circuits use less than 50 V; therefore, squib valve cables are classified as instrumentation. For spurious actuation of squib valves to occur due to hot shorts in these cables, a sequence of hot shorts would be required – two hot shorts in the "arm" circuit, followed by removal of one of these shorts, followed (within a few minutes) by two hot shorts in the "fire" circuit. This is not considered credible.

Cables from PMS cabinets to Head Vent Valves

Head vent valve circuits are two-pole, energize-to-actuate, ungrounded dc. Spurious actuation of one valve requires two hot shorts. Onerous actuation of head vents requires four hot shorts (two shorts, one in each of two divisions, for two vent valves).

Squib Valve Controller Cabinets

A squib valve controller provides firing power for each squib valve. Each PMS division has a squib valve controller cabinet. Each cabinet contains multiple squib valve controller circuits. Power to each squib valve controller is normally removed and provided by PMS when needed for arming (charging) the circuit. The circuitry of the controller is designed so that the arming signal must be removed before the firing signal is provided. The PMS "actuate" signal is provided by an output cabinet different from the cabinet that provides the arming signal. The squib valve controllers are located in the Class 1E penetration rooms, separated from the PMS cabinets to allow sufficient time for fire detection and operator action to remove power from the I&C room before fire-induced spurious actuation occurs. Normally, there is no power in the squib valve controller cabinet; therefore, hot shorts, and thus spurious actuation, are not possible.

Motor Control Center (MOV Control)

MOVs are controlled from Motor Control Centers (MCCs) located near the penetrations for that division. A single hot short across a relay in the MCC could cause a MOV to open. The two MOVs in an each of the ADS Stage 1, 2, or 3 lines are controlled from different cabinets in the MCC. Thus, two hot shorts can cause spurious actuation of ADS Stage 1, 2, or 3, one short in each of the two MCC cabinets controlling the MOVs in the same line.

Cables from Squib Valve Controller Cabinets to Squib Valves

Squib valve circuits use less than 50 V; therefore, squib valve cables are classified as instrumentation. There is not sufficient power available from other instrumentation circuits for hot shorts to cause spurious squib valve firing. This form of fire-induced spurious actuation is not credible. Squib valve spurious actuation resulting from hot shorts to another squib valve cable is acceptable because these shorts will not cause actuation until an intended actuation of the other squib. The normal actuation order of squib valves is such that the ADS Stage 4 valves actuate first.

Cables from MCC to dc MOVs

In the dc MOV cables, four hot shorts of proper polarity are required for spurious actuation of MOVs. Two of these shorts must be to conductors external to the cable and two shorts could be to internal conductors. Thus, for spurious Stage 1, 2, or 3 ADS actuation eight hot shorts are required (four external to the cable and four internal to the cable). Fire-induced spurious actuation is not considered credible.

Non1E Equipment/Penetration Room (12321)

The DAS squib valve controller cabinet is located in Room 12321.

Manual Actuation Cables

Squib valve arm/actuate circuits use less than 50 V; therefore, squib valve cables are classified as instrumentation. For spurious actuation of squib valves to occur due to hot shorts in these cables, a sequence of hot shorts would be required – two hot shorts in the "arm" circuit, followed by removal of one of these shorts, followed (within a few minutes) by two hot shorts in the "fire" circuit. This is not considered credible.

Squib Valve Controller Cabinets

A squib valve controller cabinet containing multiple squib valve controller circuits provides firing power for each squib valve. Power to each squib valve controller is normally removed and provided by the DAS switches in the control room when needed for arming (charging) the circuit. The circuitry of the controller is designed so that the arming signal must be removed before the firing signal is provided. Normally, there is no power in the squib valve controller cabinet; therefore, hot shorts, and thus spurious actuation, are not possible.

Cables from Squib Valve Controller Cabinets to Squib Valves

Squib valve circuits use less than 50 V; therefore, squib valve cables are classified as instrumentation. There is not sufficient power available from other instrumentation circuits for hot shorts causing to cause spurious squib valve firing. This form of fire-induced spurious actuation is not credible. Squib valve spurious actuation resulting from hot shorts to another squib valve cable is acceptable because these shorts will not cause actuation until an intended actuation of the other squib. The normal actuation order of squib valves is such that the ADS Stage 4 valves actuate first.

Containment

Sensor Cables

Fire-induced spurious actuation of the automatic actuation circuits requires a fire in at least two divisions. Multiple shorts in two divisions can produce a spurious actuation. For example, hot shorts of proper impedance could produce false low-pressurizer pressure signals in two divisions resulting in an automatic CMT actuation (2-out-of-4 divisions). Following the CMT actuation, a spurious automatic ADS signal could be produced if hot shorts in two divisions generate low CMT level signals. This spurious actuation scenario requires fires affecting two divisions, then two hot shorts of proper impedance for false, but valid, signals in the 4-20 mA loops. The short in the 4-20 mA circuit must have an impedance that gives a spurious signal that is in the valid range for that loop. The PMS system rejects the first out-of-range signal and simply place that channel in bypass. The second division with a spurious signal (either out of range or in range) results in a partial trip for that channel (1-out-of-4) but no actuation (2-out-of-4 not satisfied). A hot short of proper impedance is a low-probability event. Also, as the spurious signals are occurring, the DDS alarms, informing the operator that the redundant channels are not in agreement. The operator should respond to this alarm. Fire-induced spurious actuation that results in a breach of high/low pressure boundary is not credible for this scenario.

Cables from Squib Valve Controller Cabinets to Squib Valves

Squib valve circuits use less than 50 V; therefore, squib valve cables are classified as instrumentation. There is not sufficient power available from other instrumentation circuits for hot shorts to cause spurious squib valve firing. This form of fire-induced spurious actuation is not credible. Squib valve spurious actuation resulting from hot shorts to another squib valve cable is acceptable because these shorts will not cause actuation until an intended actuation of the other squib. The normal actuation order of squib valves is such that the ADS Stage 4 valves actuate first.

Cables from MCC to dc MOVs

In the dc MOV cables, four hot shorts of proper polarity are required for spurious actuation of MOVs. Two of these shorts must be to conductors external to the cable and two shorts could be to internal conductors. Thus, for spurious Stage 1, 2, or 3 ADS actuation eight hot shorts are required (four external to the cable and four internal to the cable). Fire-induced spurious actuation is not considered credible.

Head Vent Valve Cables

Head vent valve circuits are two-pole, energize-to-actuate, ungrounded dc. Spurious actuation of one valve requires two hot shorts. Onerous actuation of head vents requires four hot shorts (two shorts, one in each of two divisions, for two vent valves). The cables for the control of one head vent valve in each flow path are enclosed in steel conduit up to the valve to prevent a fire inside containment from spuriously actuating two head vent valves in one flow path.

MOVs

A fire physically located at or near an MOV will not cause the valve to stroke (actuate).

Squib Valves

A fire physically located at or near a squib valve has the potential to cause the propellant to ignite, causing the valve to actuate.

Head Vent Valves

A fire physically located at or near a head vent valve will not cause the valve to stroke (actuate).