CHAPTER 30

HUMAN RELIABILITY ANALYSIS

30.1 Introduction

This section evaluates the failure probabilities of operator actions. The AP1000 human reliability analysis (HRA) is the same as was provided in Chapter 30 of the AP600 PRA. There are no new operator actions modeled in the AP1000 PRA. The operator actions, available action times and other associated assumptions made in the AP600 human reliability analysis can be applied to the AP1000.

The human reliability analysis (HRA) for the AP1000 is based on the technique for human error rate prediction (THERP) methodology described in the Swain Handbook, NUREG/CR-1278, Reference 30-1. Human reliability analysis is used to quantify the human errors that are modeled in the event trees or fault trees. The human reliability analysis is performed according to the AP1000 Human Reliability Analysis Guidelines provided in Attachment 30A. The critical steps for the tasks, modeled in the PRA, are developed with collaboration among cognizant analysts from various disciplines (human reliability analysis, system analysis, design engineering, and emergency operating procedure design). Therefore, the human reliability analysis consists of identifying the steps that are believed to be necessary for successfully completing the task for a given event, modeling the task in failure configuration, and deducing the probability that the operating crew will fail to complete the task. Failure to complete any (or combination) of the selected steps for a task will result in failure of that task.

The human reliability analysis results are summarized in Section 30.2. The human reliability analysis methodology is discussed in Section 30.3. The major assumptions are documented in Section 30.4. Types of human interactions are discussed in Section 30.5. The quantification model is shown in Figure 30-1, and described in subsection 30.5.1. The human errors are quantified in Section 30.6. Dependency between operator actions is evaluated in Section 30.7.

30.2 Summary of Results

The results of the human reliability analysis are summarized in Table 30-1. Table 30-1 delineates the human error probabilities (HEPs) for the different cases of operator actions modeled in the event trees and fault trees and shows the unconditional human error probabilities and conditional human error probabilities where applicable.

The human error probabilities may be classified as follows:

- If human error probability is greater than or equal to 0.01, then it is likely to occur
- If human error probability is less than 0.01 but greater than or equal to 10^{-4}, then the human error probability is in the normal range
- If human error probability is less than 10^{-4}, then the human error probability is unlikely to occur

The human error probability classified as "unlikely" generally involves actions that have a relatively long time period available to be performed.

30.3 Methodology

The THERP method, developed by the Sandia National Laboratories, is treated as a form of Boolean modeling. The method represents operator behavior by simple equations dealing with certain factors such as plant equipment parameters; hardware redundancy; human redundancy, training, and stress. It is a method for predicting human error probabilities, and to evaluate degradation of a man-machine system likely to be caused by human errors alone, or by operational procedures and plant practices, or by other human characteristics that influence behavior of the plant operator.

Implementation of the THERP method is similar to the application of fault tree methodology. An operator action is broken into subtasks similar to the nodes in a fault tree, and then the subtasks are assembled together through the use of ANDed or ORed operations similar to the AND or OR boolean operations.

The subtask is the first step in this methodology. The subtask analysis models the operator actions by identifying and documenting the critical subtask for each operator action. The AP1000 emergency response guidelines follow the same structure as the generic Westinghouse Owners Group (WOG) symptom-based Emergency Response Guidelines (ERGs). Therefore, procedural errors assessed on the AP1000 plant are based on long or short procedures, consistent with the number of steps in the AP1000 emergency response guidelines.

The quantification of subtasks is the next step in the THERP methodology. This process is done by mathematical presentation of the subtasks and conversion of all independent and dependent operator steps into human error probabilities. Generally, in the conversion process, the human reliability analysis analyst utilizes four probabilistic parameters (error of detection, omission, commission, and recovery). Performance shaping factors (PSFs) are used concurrently to modify the nominal human error probability (i.e., the probability of a given human error when the effects of plant-specific performance shaping factors have not yet been considered).

The master data bank provided in Attachment 30 is used to assign probabilities to each operator action or subtask. The data bank contains mean values that are calculated from the median values of Reference 30-1 by assuming a log-normal distribution.

These two procedures (subtask analysis and quantification) are summarized in the following paragraphs:

Subtask Analysis

- List only those operator steps that are absolutely necessary to be accomplished within some time period in accordance with the operator time set forth in the Success Criteria Notebook. During this process, the hardware success criteria for each subtask is taken into account, and dependencies among subtasks are identified. The actions modeled in

the subtasks are taken from written procedures. If it is determined that there are deviations between the written procedures and the actual steps taken by the operator, such deviations can be modeled with provisions that the deviations be proceduralized and appropriate training be conducted.

Quantification

- The subtask models are represented by the human reliability analysis tree shown in Figure 30-1. The human reliability analysis tree is based on the assumption that the probabilities associated with the tree limbs are conditional probabilities.

- The quantification part of the human reliability analysis involves manually developing a probabilistic statement for each operator step defined by the subtask analysis. Estimation of human error probabilities can be based on stored data, expert prediction, or extrapolation of existing data from similar activities in operating nuclear stations. The human error probabilities for the AP1000 are estimated by using the published nominal human error probabilities from Attachment 30, and then modifying the nominal human error probabilities with the performance-shaping factors. The human reliability analysis analyst also interprets each step, based on the requirements of independent, conditional, and joint human activities, and then applies the assumed stress level to formulate a mathematical expression for the modified human error probability to be hand calculated. Finally, the results for the modeled steps, in terms of human error probabilities, are added to obtain an overall human error probability value for a particular operator action. The quantification model is shown in subsection 30.5.1.

When an error of the operator is assessed for various accident scenarios, evaluations are performed for different conditions if major distinctions are believed to exist. Otherwise, they are grouped under one identifier and used in the different system fault trees. Although the limiting case is used, the results are not expected to be sensitive to this value.

The assumptions made in the application of stress levels to the operators and in the modeling of diagnosis error are presented in subsection 30.4.0. Three different stress levels are used in the human reliability analysis; these are low, moderate, and high stress levels. Low stress level is represented by a multiplier of "1," moderate stress level by "2," and high stress level by "5." Generally, throughout the analysis, a stress level of "1" is applied to operator actions performed during normal plant operating condition; "2" is applied for actions during transients; and "5" is applied for actions during loss-of-coolant accidents, loss of offsite power, anticipated transient without scram, and some transient events. For events evaluated during shutdown plant conditions, moderate and high stress levels are applied. Stress factors are applied to procedural errors as well as diagnostic errors.

In most cases, the diagnostic error is unique to a particular procedure action, and, as such, the diagnosis and procedural errors are summed and represented by one event identifier.

In other cases, the diagnostic error is common to several procedural errors. In such cases, the diagnostic error is separated from the procedural errors, and the errors are represented by different event identifiers. One such case occurs in the diagnostic error to understand the need for actuation of alternative core cooling systems during a transient event, when the heat

removal capability by the steam generator is lost and the passive residual heat removal system fails to start automatically. This diagnostic error, identified by HPM-MAN01, is common to the manual actuation of the passive residual heat removal system and the startup feedwater system.

30.4 Major Assumptions

a. Diagnosis Modeling

THERP defines diagnosis as having three components, namely detection + diagnosis + decision. The THERP definition is believed to be applicable to knowledge-based responses, whereby the operators go through more thought-process (deciphering) in order to diagnose an event. The generic procedures (Emergency Response Guidelines) are based on the philosophy of symptomatic responses to an emergency operating situation and, therefore, reduce the diagnosis of an event to responding to cues such as alarms, annunciators, and indicators (detection); thus limiting the cognitive aspects (diagnosis + decision). Therefore, it is advisable not to use Table 20-3 of the THERP Handbook or similar models for actions governed by symptom-based procedures in which the operators are trained; such activities are termed rule-based actions.

Although the use of symptom-based procedures may not eliminate all knowledge-based behaviors by the operators, the scope of the AP1000 human reliability analysis covers only the modeling of rule-based activities. Therefore, no credit is taken for knowledge-based recovery efforts.

b. Initiation of Operator Action

Visual and audible alarms serve as prompts for initial operator response. For an abnormal plant condition resulting in a reactor trip or the need for reactor trip, operator activity begins with the proceduralized step in AE-0 within which diagnosis of the event is conducted. In other words, the operator is not led from the alarm indications directly to diagnosis of the event, without going through the AE-0 procedure.

Based on human factors engineering (HFE) design requirements for the AP1000 alarm system, the operators are expected to be presented with the diagnosis cues, modeled in the HRA, in the highest priority, and be able to focus primarily on these cues. The AP1000 alarm system addresses the problem of alarm avalanching and operator data overload by reducing the number of indications presented simultaneously during major disturbances. In that regard, highest priority messages are clearly indicated to the operators, and minor alarms are prioritized and elevated to a place (or level) of attention based on importance significance; those active alarm messages which are not currently displayed shall be accessible and available to the operator upon his request.

c. Dependency Modeling

In general, if the success of a task requires the success of ORed operator actions, (in which case, operator error of the task is failure of the ANDed actions), then dependency modeling is applied. This assumption is based on the belief that if the

operator fails the first step in a series or group of ORed actions, it is more likely that the operator will fail subsequent steps in the group. In that regard, the nominal human error probability (multiplied by performance shaping factor) is applied to the first step; then low dependency is applied to the human error probability of the first step to derive the human error probability of the second step. Moderate dependency is applied to the first step to derive the human error probability of the third step; and high dependency is applied to the first step to derive the human error probability for the fourth and subsequent steps. However, if it is believed that the dependency relationship, described above, does not exist for multiple ORed steps, then a moderate dependency is applied throughout. The dependencies are evaluated by the equations provided in Reference 1, Tables 20-17 and 20-18. The human error probability for the task will be the product of the human error probabilities for the respective dependent steps.

During an emergency, two operators – the reactor operator and the senior reactor operator – are assumed to be carrying out the action in the main control room for the core cooling functions, and another two operators (balance of plant operator and auxiliary operator) are assumed to be available to perform the actions on support systems outside of the main control room. A moderate dependency is assumed between the operators. The application of dependency among operating crew members is provided in assumption f.

d. Operator Stress Level

It is assumed that the operators will be adequately trained to perform the necessary tasks. At event initiation, a low stress level is assumed (in particular to operator response to an ALARM), since the operator may not realize the severity of the event during this initial response stage of the event. In most cases, the operators are assumed to experience a moderate stress level because of the nature of the event and lack of being unduly challenged in performing the proceduralized tasks. It is believed that the operator will experience high stress during an event with an SI signal present, such as a steam generator tube rupture, a loss-of-coolant accident (LOCA), or a loss-of-all-ac-power accident. During quantification, the three different stress levels are applied to the respective nodes as performance-shaping factors which are multiplied by the nominal human error probabilities of the subtasks. In general, a uniform stress level is applied to the subtasks of each event as follows: a multiplier of 5.0 is used for high stress, 2.0 for moderate stress, and 1.0 for low stress.

e. Control Room Indication

Unless otherwise specified, control room indication is provided for equipment status, with visual and audible alarm indications of equipment failures or parameter deviations. Control room indication is assumed to be consistent and accurate (i.e., no operator interpretation or diagnosis of true indication is assumed to be necessary).

Currently, there are no established or widely accepted human error probabilities for using advanced digital controls and displays. The THERP nominal human error probabilities for conventional control room man-machine-interface (MMI) were used in computing the human reliability analysis values. However, the controls and displays that

will be available in the AP1000 control room will be superior to the conventional control room man-machine-interface and, therefore, the nominal human error probabilities are expected to be less than those employed in the current evaluation of the AP1000.

There may be several alarms annunciated simultaneously during an emergency situation, many of which may not be related to diagnosis of the event. The alarms addressed in the human reliability analysis are assumed to be the critical alarms to which the operators are required to respond to aid in diagnosis of the particular event.

f. Unproceduralized Control Recovery

The term *unproceduralized recovery* is used to represent the probability of failure of the operating crew to recover from error(s) made by one of the crew members while performing a task, given that a defined amount of slack time exists for completing the task.

It is assumed that each control room operator is responsible for completing specific tasks. However, during an abnormal event, the operating crew functions as a team to perform the actions necessary to mitigate the transient. In performing the AP1000 human reliability analysis, it was decided that modifications should be made to the base human error probabilities for control room recovery errors to account for the advantages or enhancements in using the symptom-based procedures, given the type of the event and timing considerations.

Based on operator talk-throughs at several operating nuclear power plant sites, it was determined that, during an emergency, there are chances for control room personnel to recover errors made by an operator. This recovery is characterized as "awareness checking," and is referred to as *unproceduralized recovery*. Unproceduralized recovery by the shift technical advisor (STA) is applied to an event having both a time window greater than 10 minutes and slack time greater than 5 minutes. In general, unproceduralized recovery by the senior reactor operator (SRO) is applied to any event having a time window greater than 5 minutes, if the estimated actual time does not exceed the available time window.

The formulation for unproceduralized checking is as follows:

- Given the current operating method, with constant feedback between reactor operator (RO) and senior reactor operator, it has been determined that the senior reactor operator could recover an error made by the reactor operator on the control board. This recovery is assigned the unconditional human error probability of 8.1E-02, described by THERP as "one-of-a-kind checking with alert factors." To account for dependency between senior reactor operator and reactor operator, the conditional human error probability is calculated by applying the equation from THERP, Table 20-17: $(1 + 19n)/20$; where $n = 8.1E\text{-}02$. This recovery is equated to 1.27E-01, which is rounded to 1.0E-01.

- According to information from operator interviews at several operating plants, it was determined that the shift technical advisor is required to arrive at the control

room within 5 to 10 minutes after an initiating event. It is assumed that this requirement will also be applied during operation of the AP1000.

By participating in simulator exercises and observing control room crew performance during simulator exercises at several sites, it was determined that the recovery function of the shift technical advisor is more or less independent of the function of the control room operators. The shift technical advisor monitors the status trees and is expected to provide an independent recovery path for errors made by the other crew members. Therefore, the base human error probability of 8.1E-02, described by THERP as "one-of-a-kind checking with alert factors," is applied for the shift technical advisor and modified with the appropriate stress level for the event. This recovery is applied only if the time window and slack time criteria are satisfied.

Therefore, unproceduralized recovery is generally represented by: 8.1E-02 x 0.1 x "stress level." (See assumption j for the discussion on the application of slack time and examples of the application of unproceduralized recovery based on different amounts of slack time.)

g. Local Recovery

For local actions, a checking recovery of 1.6E-01 is applied. This base human error probability was selected from the THERP human error probability for "checking routine tasks." Although the THERP definition for checking is not exactly the same as the definition meant for this kind of recovery, the error rate of 1.6E-01 seems most suitable to represent this recovery. The local recovery is based on the existence of radio communication between control room and auxiliary operators, and also, in some cases, on the existence of control room indication of the status of equipment being locally manipulated. This recovery is different in nature from the unproceduralized control room recovery, discussed previously, because local recovery is conducted outside of the control room. Therefore, the recovery for local actions has a higher nominal human error probability than the human error probability used for unproceduralized control room recovery. In cases where the local actions are performed under the immediate guidance and feedback from the control room personnel (such as during local regulating of the startup feedwater flow), the control room recovery of 1.0E-01 by the senior reactor operator is applied for recovery of the local action. In other cases, it is assumed that the recovery is made locally by one of the auxiliary operators, and the base human error probability of 1.6E-01, modified by stress level, is applied .

h. Operator Actions Less Than Five Minutes

Based on engineering judgment, no recovery is applied to tasks that require completion of detection and corrective action within five minutes.

i. Operator Actions Greater Than Five Minutes

On the other hand, recovery credit is applied for the operating philosophy with the use of symptom-based procedures for events with detection and action time windows greater

than five minutes. This recovery by the senior reactor operator and, in some cases, by the shift technical advisor, is applied as discussed in assumption f.

j. Slack Time/Time Window/Actual Time

Slack time is defined as "the time window" minus "the estimated actual time." "Time window" is defined as the time available to perform the required task before system failure occurs, as identified in the success criteria. Unless stated otherwise, the time window represents the time from when the specific cues are provided until the time system failure is expected to occur if no action is taken. The time windows used in the human reliability analysis are bounded by (not greater than) the times specified in the success criteria provided in Chapter 6. Defining the "estimated actual time" to perform an operator action on the AP1000 is done by engineering judgment. These times are estimated with concurrence among the cognizant AP1000 system designers, system analysts, emergency procedure developers, and human reliability analysts. The estimated actual times used in the Individual Plant Evaluations, performed by Westinghouse, are also available for comparison.

If the operators have more time than the average amount of time needed to complete the task, then it is assumed that the operator's performance is not time-dependent. If slack time is believed to exist for completing a particular task, an appropriate recovery is applied as follows:

- For any event with slack time less than one hour, recovery is applied according to the criteria defined in assumption f.

- It is believed that it is logical to make some distinction in the evaluation of similar actions which have widely different amounts of slack time. For instance, if an operator action with a time window of 30 minutes and slack time of 8 minutes was evaluated, and the human error probability for that action dominated core damage frequency, how could one re-evaluate that operator action if the utility proposes a design change that would increase the time window for the action from 30 minutes to 150 minutes. It is believed that some benefit in changing the slack time (as in the example cited) should be evidenced in the human error probability. Therefore, a moderate dependency is assumed among operating crew members after one hour of slack time. The THERP BHEP of 8.1E-02 is, again, used as the basis; applying the equation from THERP Table 20-17, (1 + 6n)/7, a value of 0.21 is derived.

- For operator actions that are performed during shutdown, a high dependency is assumed among crew members for slack time beyond one hour, because many activities, such as equipment test and maintenance, could be taking place during shutdown. Therefore, for shutdown cases, a recovery factor of 0.54 is credited for slack time beyond one hour.

Examples of application of unproceduralized recovery credit based on different amounts of slack time can be seen in the analyses for the following events:

- Event LPM-MAN02, evaluated in subsection 30.6.3, shows credit taken only for the senior reactor operator; the time window is greater than five minutes, but slack time is less than five minutes.

- Event ZON-MAN01, evaluated in subsection 30.6.1, shows credit taken for the senior reactor operator and shift technical advisor; the time window is greater than 10 minutes, and slack time is greater than 5 minutes but less than 1 hour.

- Event CIC-MAN01, evaluated in subsection 30.6.14, shows credit taken for the senior reactor operator and shift technical advisor; slack time is longer than one hour.

k. Omission Error

Although emergency procedures do not have a space for checkoff, operator talk-throughs at operating plants indicate that, during an emergency, the operator uses pencil checks or other marking devices to check off steps that are completed. Therefore, omission errors pertaining to these procedures are addressed by "errors of omission when procedures with checkoff provisions are used."

l. Dependency among Cues

A primary cue is defined as an essential (necessary and sufficient) cue for diagnosis of an event. A secondary cue is redundant to a primary cue, but it is not necessary for diagnosis of the event.

If secondary cues are available, it is assumed that the operator can recover from an error of detection (or diagnosis) made when using the primary cues. It is assumed that if the operator fails to detect the event using the primary cue, then it is more likely that the operator will fail to detect the event when the secondary cue is used. Therefore, a dependency is assumed to exist when such cues are used; moderate dependency on the primary cues is assumed when the operator uses the secondary cues.

It is recognized that inconsistencies may exist between the cues modeled in the human reliability analysis and the hardware failures modeled in the system notebooks. Since the cues modeled in the human reliability analysis are believed to be generally more than what are required for detecting the respective accident scenarios, it was decided not to re-evaluate the cues at this time. It is believed that the current evaluation is conservative. The cues modeled in the human reliability analysis should be verified when the operating procedures are developed.

30.5 Types of Human Interactions

The types of human interactions considered in this analysis are consistent with the following systematic human action reliability procedure (SHARP) methodology (Reference 30-2):

- Type A – Before an initiating event, plant personnel can affect availability and safety by inadvertently disabling equipment during test or maintenance.
- Type B – By committing an error, plant personnel can initiate an accident.
- Type C – By following procedures during an accident, plant personnel can operate standby equipment that terminates the accident.

Most of the human errors modeled in the AP1000 PRA are type C. For the type C human interaction, most manual actions are modeled as being performed in the main control room. Very few actions that should be performed locally are identified and modeled; these local actions are considered to be very simple. Examples of such local actions include the opening of a manual valve by handwheel, located where room accessibility is allowed during the specific event.

Particular cases of type C human interactions are errors of commission which worsen the situation, due to the incorrect diagnosis of the plant condition, or the unintentional use of the wrong control. A systematic, qualitative assessment was performed for these cases of type C human interactions and documented in Section 30.8.

The human interactions are generally analyzed by applying the following five basic steps:

1. Definition of human action
2. Screening for importance
3. Representation in relation to the system logic models
4. Quantification
5. Documentation

In the AP1000 human reliability analysis, step 2, screening of the operator actions for importance, was not performed. Therefore, none of the identified and evaluated operator actions were screened out.

Dependencies between human errors are considered, as applicable, in the evaluation of types A and C interactions where they are most likely to occur.

Human errors evaluated for AP1000 are considered to be credible actions which could impact the operation or fail the following systems/subsystems:

- Power supply (ac and dc)
- Automatic depressurization
- Component cooling water

- Containment isolation
- Core makeup tank
- Chemical and volume control
- Chilled water
- Instrument air
- In-containment refueling water storage tank
- Normal residual heat removal
- Passive containment cooling
- Passive residual heat removal
- Reactor coolant
- Reactor trip
- Startup feedwater
- Steam generator
- Service water
- Turbine building closed cooling water

30.5.1 Quantification Model

The human reliability analysis model quantifies an human error probability in terms of three phases:

- Phase 1 – Cognitive phase (detection/diagnosis), with probability Qd
- Phase 2 – Action phase, with probability Qa
- Phase 3 – Recovery phase, with probability Qr

where:

Qd = Failure probability of diagnosis phase, and
Qa = Failure probability of action phase

The model uses the following equation to estimate the human error probability (Q):

$$Q = Qd*Qdr + Qd*[1-Qdr]*Qa*Qar + [1-Qd]*Qa*Qar \quad (30\text{-}1)$$

where:

Qdr = Failure probability of diagnosis phase recovery
Qar = Failure probability of action phase recovery

This equation is illustrated by an human reliability analysis tree in Figure 30-1.

The model estimates the quantities Qd, Qdr, Qa, and Qar to calculate the human error probability. In most cases, 1-Qd is approximately equal to 1.0, and (1-Qdr)*Qd is negligibly small. Therefore, equation 30-1 can be simplified and represented by: Q = Qd*Qdr + Qa*Qar.

30.6 Quantification

The quantification of human errors modeled in the event trees and fault trees are provided in the subsections that follow.

30.6.1 ZON-MAN01 (Start the Onsite Standby Diesel Generator)

The ZON-MAN01 operator action evaluates the probability of failure to recognize the need and failure to start the onsite standby diesel generator (DG) during a loss of offsite power.

The following assumptions are used as input to the quantification of ZON-MAN01:

- Procedure (LONG/SHORT): SHORT
- Time window: 30 minutes
- Estimated actual time: approximately 10 minutes
- Cues: primary – no voltage
  secondary – loss of external grid
  (Many alarms are expected for this incident. Based on engineering judgment, it is assumed that response to five alarms is required.)
- Stress level: HIGH (multiplier of 5 is applied)
- Recovery by: shift technical advisor and senior reactor operator

Item No.	Subtask Description for ZON-MAN01	Mean HEP	Stress Level	Source: Table 30A-4 (Item)	Recovery Factor	Modified HEP
1	Failure to respond to one of five alarms	8.0E-03	5	50	4.05E-02	1.62E-03
2	Select wrong control to start diesel generator	1.3E-03	5	29	4.05E-02	2.63E-04
3	Omit step to start diesel generator	1.3E-03	5	8	4.05E-02	2.63E-04
4	Select wrong control to close diesel generator circuit breaker	1.3E-03	5	29	4.05E-02	2.63E-04
5	Omit step to close diesel generator circuit breaker	1.3E-03	5	8	4.05E-02	2.63E-04
	Total HEP = Item 1 + Item 2 + Item 3 + Item 4 + Item 5					2.67E-03

Notes:
1. Recovery is evaluated by "item 40 in HRA data table" x "stress level" x "0.1"; where item 40 represents recovery by STA equated to 8.1E-02, and 0.1 is recovery by SRO.
2. "Modified HEP" = "mean HEP" x "stress level" x "recovery factor"

30.6.2 LPM-MAN01 (Recognize the Need for Reactor Coolant System Depressurization)

The operator actions to recognize the need and perform reactor coolant system depressurization are modeled for various accident conditions with different operating status of the core makeup tanks and automatic depressurization system.

The operator actions are defined for two initiating event groups as follows:

- Transient (loss of passive residual heat removal system) or small LOCA
- Medium LOCA

Each initiating event is defined for cases with failure of automatic actuation of core makeup tanks, and success of automatic actuation of core makeup tanks with failed automatic actuation of the automatic depressurization system; therefore, four cases are defined. Details on the success criteria for these accident conditions and associated operator actions are provided in the success criteria section of the PRA.

The inputs used to define the different operator action cases are outlined below, and quantification of each operator action is provided in a separate subsection.

The small LOCA/transient diagnosis case (LPM-MAN01) is quantified in this subsection. The medium LOCA diagnosis case (LPM-MAN02) is quantified in subsection 30.6.3. The action to actuate the core makeup tanks if automatic actuation fails (CMN-MAN01) is quantified in subsection 30.6.16, and actuation of automatic depressurization system (AND-MAN01) is addressed in subsection 30.6.6.

The operator actions for reactor coolant system depressurization are defined by the following characteristics:

Initiating Event	Diagnosis ID	CMT Action ID	ADS Action ID	Time Window	Estimated Actual time	Cues	Comments
Transient or SLOCA (with failed CMT)	LPM-MAN01 (Need for CMT and ADS)	CMN-MAN01	ADN-MAN01	30 min (for diagnosis & action)	18 minutes; (15 min for diag. and CMT actuation; 3 min from CMT actuation, for ADS actuation)	Transient: (failed PRHR; low SG level & low SFW – 2 alarms) SLOCA: (low PZR level; low NR SG level – 2 alarms)	Although the cues may be different for the transient and SLOCA events, the diagnosis is based on the crew response to 2 alarms; therefore, the evaluation is considered to be the same for both initiators. ADN-MAN01 is dependent on CMN-MAN01. Response is essentially for bleed & feed; therefore, concurrent CMT & ADS actuation is expected.

Initiating Event	Diagnosis ID	CMT Action ID	ADS Action ID	Time Window	Estimated Actual time	Cues	Comments
Transient or SLOCA (with CMT auto success & failed auto ADS)	LPM-MAN01 (Need for ADS)	N/A	ADN-MAN01	30 min (for diagnosis & action)	18 minutes; (for diag. and ADS actuation)	Transient: (failed PRHR; low SG level & low SFW – 2 alarms) SLOCA: (low PZR level; low NR SG level – 2 alarms)	Despite the difference in this case and the above (transient/SLOCA) case with regard to CMT status, the actions to diagnose and actuate ADS are essentially the same. Also, the time window, actual time and cues are judged to be the same. Therefore, same IDs and HEPs are used for both cases.
MLOCA (with failed CMT)	LPM-MAN02 (Need for CMT and ADS)	CMN-MAN01	ADN-MAN01	20 min (for diagnosis & action)	18 minutes; (15 min for diag. and CMT actuation; and 3 more min for ADS actuation)	low PZR level; low PZR pressure – 2 alarms)	ADN-MAN01 is dependent on CMN-MAN01. Response is essentially for bleed & feed; concurrent CMT & ADS actuation is expected.
MLOCA (with CMT auto success & failed auto ADS)	LPM-MAN02 (Need for ADS)	N/A	ADN-MAN01	20 min (for diagnosis & action)	18 minutes; (for diag. and ADS actuation)	low PZR level; low PZR pressure – 2 alarms)	Despite the difference in this case and the above (MLOCA) case with regard to CMT status, the actions to diagnose and actuate ADS are essentially the same. Also, the time window, actual time and cues are judged to be the same. Therefore, same IDs and HEPs are used for both cases.

The LPM-MAN01 operator action evaluates the probability of failure to recognize the need for reactor coolant system depressurization during a small loss-of-coolant accident or loss of the high-pressure heat removal system.

The following assumptions are used as input to the quantification of LPM-MAN01:

- Procedure (LONG/SHORT): LONG
- Time window: 30 minutes (for diagnosis and action)
- Estimated actual time: approximately 15 minutes (for diagnosis)
- Cues: primary (for transient) – failure of passive RHR, low steam generator (SG) level, and low startup feedwater flow
  primary (for small LOCA) – low SG narrow-range level, low pressurizer level
  (It is assumed that response to two alarms is required.)
- Stress level: HIGH (multiplier of 5 is applied)
- Recovery by: shift technical advisor and senior reactor operator

LPM-MAN01 is quantified as follows:

Item No.	Subtask Description for LPM-MAN01	Mean HEP	Stress Level	Source: Table 30A-4 (Item)	Recovery Factor	Modified HEP
1	Failure to respond to one of two alarms	1.6E-03	5	47	4.05E-02	3.24E-04
2	Misread cue displays (complete dependency assumed)	1.2E-03	5	24	4.05E-02	2.43E-04
3	Omit steps to verify cues	3.8E-03	5	9	4.05E-02	7.70E-04
	Total HEP = Item 1 + Item 2 + Item 3					1.34E-03

Notes:
1. Recovery is evaluated by "item 40 in HRA data table" x "stress level" x "0.1"; where item 40 represents recovery by STA, and 0.1 is recovery by SRO.
2. "Modified HEP" = "mean HEP" x "stress level" x "recovery factor"

30.6.3 LPM-MAN02 (Recognize the Need for Reactor Coolant System Depressurization)

The LPM-MAN02 operator action evaluates the probability of failure to recognize the need for reactor coolant system depressurization during a medium loss-of-coolant accident.

The following assumptions are used as input to the quantification of LPM-MAN02:

- Procedure (LONG/SHORT): LONG
- Time window: 20 minutes (for diagnosis and action)
- Estimated actual time: approximately 15 minutes (for diagnosis)
- Cues: primary – low pressurizer level, low pressurizer pressure
  (It is assumed that response to two alarms is required.)
- Stress level: HIGH (multiplier of 5 is applied)
- Recovery by: senior reactor operator

LPM-MAN02 is quantified as follows:

Item No.	Subtask Description for LPM-MAN02	Mean HEP	Stress Level	Source: Table 30A-4 (Item)	Recovery Factor	Modified HEP
1	Failure to respond to one of two alarms	1.6E-03	5	50	1.00E-01	8.00E-04
2	Misread cues (total dependency assumed)	1.2E-03	5	24	1.00E-01	6.00E-04
3	Omit step to verify cues	3.8E-03	5	9	1.00E-01	1.90E-03
	Total HEP = Item 1 + Item 2 + Item 3					3.30E-03

Note:
1. "Modified HEP" = "mean HEP" x "stress level" x "recovery factor"

30.6.4 LPM-MAN05 (Recognize the Need for Reactor Coolant System Depressurization)

The LPM-MAN05 operator action evaluates the probability of failure to recognize the need for reactor coolant system depressurization during a shutdown condition with failure of the core makeup tanks and the normal residual heat removal system.

The following assumptions are used as input to the quantification of LPM-MAN05:

- Procedure (LONG/SHORT): LONG
- Time window: 60 minutes
- Estimated actual time: approximately 20 minutes
- Cues: primary – loss of normal residual heat removal capability
  secondary – low hot leg water level
  (It is assumed that response to two different types of alarms is required.)
- Stress level: HIGH (multiplier of 5 is applied)
- Recovery by: shift technical advisor and senior reactor operator

LPM-MAN05 is quantified as follows:

Item No.	Subtask Description for LPM-MAN05	Mean HEP	Stress Level	Source: Table 30A-4 (Item)	Recovery Factor	Modified HEP
1	Failure to respond to one of two alarms	1.6E-03	5	47	4.05E-02	3.24E-04
2	Misread hot leg water level	1.2E-03	5	24	4.05E-02	2.43E-04
3	Omit step to acknowledge primary cue	3.8E-03	5	9	4.05E-02	7.70E-04

Item No.	Subtask Description for LPM-MAN05	Mean HEP	Stress Level	Source: Table 30A-4 (Item)	Recovery Factor	Modified HEP
4	Omit step to verify secondary cue (moderate dependency on primary cue assumed [(1+6N)/7], where N = 1.90E-03)					~ 1.50E-01
	Total HEP = Item 1 + Item 2 + (Item 3 x item 4)					6.83E-04

Notes:
1. Recovery is evaluated by "item 40 in HRA data table" x "stress level" x "0.1"; where item 40 represents recovery by STA, and 0.1 is recovery by SRO.
2. "Modified HEP" = "mean HEP" x "stress level" x "recovery factor"

30.6.5 LPM-REC01 (Recognize the Need for Reactor Coolant System Depressurization)

The LPM-REC01 operator action evaluates the probability of failure to recognize the need for reactor coolant system depressurization during a small loss-of-coolant accident or transient with loss of the passive residual heat removal system, and successful operation of the core makeup tanks after core damage.

The following assumptions are used as input to the quantification of LPM-REC01:

- There is a very long time between performing LPM-MAN01 and when LPM-EC01 is required.
- Based on engineering judgment, LPM-REC01 is assumed to have a low dependency on LPM-MAN01.
- The unconditional human error probability for LPM-REC01 is assumed to be similar to the human error probability for LPM-MAN01 (1.34E-03).

Therefore, the conditional human error probability of LPM-REC01 is estimated to be 5.00E-02.

30.6.6 ADN-MAN01 (Actuate the Automatic Depressurization System)

The ADN-MAN01 operator action evaluates the probability of failure to actuate the automatic depressurization system (ADS) for reactor coolant system depressurization as recovery from failure of automatic actuation or for manual automatic depressurization system actuation.

The various time windows for scenarios requiring automatic depressurization system actuation are outlined in subsection 30.6.2. Although a time window of 30 minutes for diagnosis and task performance is defined for the SLOCA/transient initiating event cases, the unconditional human error probability (HEP) to actuate automatic depressurization system is

based on the more limiting case (MLOCA with core makeup tanks success) with a time window of 20 minutes and an estimated actual time of 18 minutes to diagnose and actuate the automatic depressurization system. It is conservatively assumed that the crew will take about 15 minutes to go through the procedures to diagnose the event; therefore, the remaining five minutes is assigned as the window for actuating automatic depressurization system.

Based on the dependency evaluation criteria, for cases where core makeup tanks automatic actuation is assumed to have failed, ADN-MAN01 is assigned a high dependency on operator action CMN-MAN01 (Actuate Core Makeup Tanks). The conditional HEP for ADN-MAN01 is 5.0E-01.

The following assumptions are used as input to the quantification of ADN-MAN01:

- Procedure (LONG/SHORT): LONG
- Time window: 5 minutes
- Estimated actual time: approximately 3 minutes
- Cues: diagnosis errors are addressed in LPM-MAN01 and LPM-MAN02
- Stress level: HIGH (multiplier of 5 is applied)
- Recovery by: senior reactor operator

The senior reactor operator is assumed to participate in the manipulation activity to actuate the automatic depressurization system stages, since two operators are needed to initiate the system. Therefore, recovery from error of commission is not credited for the senior reactor operator. However, for error of omission, credit for recovery is taken for the senior reactor operator.

Success is defined as actuating at least two of four stage lines by pressing two pushbuttons for each stage; complete dependency relationship is assumed among the actions in pressing the pushbuttons. In this evaluation, for simplicity, the system failure is assumed to occur if two stages are not open; failure of each of the subsequent stages is assumed to be moderately dependent on failure of the first stage.

ADN-MAN01 is quantified as follows:

Item No.	Subtask Description for AND-MAN01	Mean HEP	Stress Level	Source: Table 30A-4 (Item)	Recovery Factor	Modified HEP
1	Select wrong control for first stage	1.3E-03	5	28	N/A	6.50E-03
2	Select wrong control for subsequent stages (each stage is evaluated by [1+6N]/7, where N = 2.63E-03)	1.50E-01 x 3 = 4.50E-01	N/A	N/A	N/A	4.50E-01
3	Omit step to actuate first stage	3.8E-03	5	9	1.00E-01	1.90E-03

Item No.	Subtask Description for AND-MAN01	Mean HEP	Stress Level	Source: Table 30A-4 (Item)	Recovery Factor	Modified HEP
4	Omit steps for subsequent stages (each stage is evaluated by [1+6N]/7, where N = 7.70E-04)	1.50E-01 x 3 = 4.50E-01	N/A	N/A	1.00E-01	4.50E-02
	Total HEP = (Item 1 x Item 2) + (Item 3 x Item 4) = 2.93E-03 + 8.55E-05					3.02E-03

Note:
1. "Modified HEP" = "mean HEP" x "stress level" x "recovery factor"

30.6.7 ADN-REC01 (Actuate the Automatic Depressurization System)

The ADN-REC01 operator action evaluates the probability of failure to actuate the automatic depressurization system for reactor coolant system depressurization as recovery from failure of automatic actuation or for manual automatic depressurization system actuation, after core damage.

The following assumptions are used as input to the quantification of ADN-REC01:

- There is a very long time between performing ADN-MAN01 and when ADN-REC01 is required.
- Based on engineering judgment, ADN-REC01 is assumed to have a low dependency on ADN-MAN01.
- The unconditional human error probability for ADN-REC01 is assumed to be similar to the human error probability for ADN-MAN01 (3.02E-03).

Therefore, the conditional human error probability of ADN-REC01 is estimated to be 5.00E-02.

30.6.8 CCB-MAN01 (Start the Standby Component Cooling Water Pump)

The CCB-MAN01 operator action evaluates the probability of failure to recognize the need and failure to start the standby component cooling water pump B, during a loss-of-coolant accident, transient, or loss of offsite power.

The following assumptions are used as input to the quantification of CCB-MAN01:

- Procedure (LONG/SHORT): SHORT
- Time window: 30 minutes
- Estimated actual time: approximately 10 minutes
- Cues: primary – low CCW flow
  (It is assumed that response to three alarms is required.)

- Stress level: HIGH (multiplier of 5 is applied)
- Recovery by: shift technical advisor and senior reactor operator

CCB-MAN01 is quantified as follows:

Item No.	Subtask Description for CCB-MAN01	Mean HEP	Stress Level	Source: Table 30A-4 (Item)	Recovery Factor	Modified HEP
1	Failure to respond to one of three alarms	2.7E-03	5	48	4.05E-02	5.47E-04
2	Select wrong control to start CCW pump B	1.3E-03	5	29	4.05E-02	2.63E-04
3	Omit step to start CCW pump B	1.3E-03	5	8	4.05E-02	2.63E-04
	Total HEP = Item 1 + Item 2 + Item 3					1.07E-03

Notes:
1. Recovery is evaluated by "item 40 in HRA data table" x "stress level" x "0.1"; where item 40 represents recovery by STA equated to 8.1E-02, and 0.1 is recovery by SRO.
2. "Modified HEP" = "mean HEP" x "stress level" x "recovery factor"
3. The HEP calculated for CCB-MAN01 is applied to event CCB-MAN01N as a conservative estimate for starting the standby CCW pump during normal operation.

30.6.9 CCN-MAN02 (Inadvertent Misalignment of Heat Exchanger)

The CCN-MAN02 operator action evaluates the probability of inadvertent alignment of heat exchanger (HX) H001B when heat exchanger H001A should be aligned during normal operation.

The following assumptions are used as input to the quantification of CCN-MAN02:

- Procedure (LONG/SHORT): LONG
- Time window: 60 minutes
- Estimated actual time: approximately 30 minutes
- Cues: primary – high temperature on line downstream of heat exchanger
  (It is assumed that response to one alarm is required.)
- Stress level: MODERATE (multiplier of 2 is applied)
- Recovery by: shift technical advisor and senior reactor operator

CCN-MAN02 is quantified as follows:

Item No.	Subtask Description for CCN-MAN02	Mean HEP	Stress Level	Source: Table 30A-4 (Item)	Recovery Factor	Modified HEP
1	Failure to respond to one of one alarm	2.7E-04	2	46	1.62E-02	8.75E-06
2	Misread heat exchanger temperature indication	1.2E-03	2	24	1.62E-02	3.89E-05
3	Omit step to check temperature	3.8E-03	2	9	1.62E-02	1.23E-04
4	Omit step to locally switch heat exchanger	1.3E-03	2	11	N/A	2.60E-02
	Total HEP = Item 1 + Item 2 + Item 3 + Item 4					2.62E-02

Notes:
1. Recovery for control room actions is evaluated by "item 40 in HRA data table" x "stress level" x "0.1"; where item 40 represents recovery by STA equated to 8.1E-02, and 0.1 is recovery by SRO.
2. It is conservatively assumed that the local action is not recoverable; therefore, local recovery is not applied.
3. "Modified HEP" = "mean HEP" x "stress level" x "recovery factor"

30.6.10 CIB-MAN00 (Diagnose Steam Generator Tube Rupture)

The CIB-MAN00 operator action evaluates the probability of failure to diagnose a steam generator tube rupture event.

The following assumptions are used as input to the quantification of CIB-MAN00:

- Procedure (LONG/SHORT): LONG
- Time window: 30 minutes
- Estimated actual time: approximately 15 minutes
- Cues: primary – high radiation level in main steam line
  (Although other cues may be available, such as high steam generator level and low pressurizer level, credit is taken only for recognizing high radiation level. It is assumed that response to two alarms is required.)
- Stress level: HIGH (multiplier of 5 is applied)
- Recovery by: shift technical advisor and senior reactor operator

CIB-MAN00 is quantified as follows:

Item No.	Subtask Description for CIB-MAN00	Mean HEP	Stress Level	Source: Table 30A-4 (Item)	Recovery Factor	Modified HEP
1	Failure to respond to one of two alarms	1.6E-03	5	47	4.05E-02	3.24E-04
2	Misread radiation level	3.7E-03	5	17	4.05E-02	7.49E-04
3	Omit step to verify steam generator level	3.8E-03	5	9	4.05E-02	7.70E-04
	Total HEP = Item 1 + Item 2 + Item 3					1.84E-03

Notes:
1. Recovery is evaluated by "item 40 in HRA data table" x "stress level" x "0.1"; where item 40 represents recovery by STA equated to 8.1E-02, and 0.1 is recovery by SRO.
2. "Modified HEP" = "mean HEP" x "stress level" x "recovery factor"

30.6.11 DUMP-MAN01 (Operate Steam Dump Valves)

The DUMP-MAN01 operator action evaluates the probability of failure to adjust the steam dump valves, given a steam generator tube rupture event. The faulted steam generator is successfully isolated.

The following assumptions are used as input to the quantification of DUMP-MAN01:

- Procedure (LONG/SHORT): LONG
- Time window: 30 minutes
- Estimated actual time: approximately 15 minutes
- Cues: primary – cues addressed in CIB-MAN00
- Stress level: HIGH (multiplier of 5 is applied)
- Recovery by: shift technical advisor and senior reactor operator

DUMP-MAN01 is quantified as follows:

Item No.	Subtask Description for DUMP-MAN01	Mean HEP	Stress Level	Source: Table 30A-4 (Item)	Recovery Factor	Modified HEP
1	Turn multiposition switch to operate steam dumps to wrong position	2.7E-03	5	34	4.05E-02	5.47E-04
2	Omit step to adjust steam dumps	3.8E-03	5	9	4.05E-02	7.70E-04
	Total HEP = Item 1 + Item 2					1.32E-03

Notes:
1. Recovery is evaluated by "item 40 in HRA data table" x "stress level" x "0.1"; where item 40 represents recovery by STA, and 0.1 is recovery by SRO.
2. "Modified HEP" = "mean HEP" x "stress level" x "recovery factor"

30.6.12 CIC-MAN01 (Isolate Containment)

The CIC-MAN01 operator action evaluates the probability of failure to recognize the need and failure to isolate the containment, given core damage following a loss-of-coolant accident, loss-of-offsite power, station blackout, or transient.

The following assumptions are used as input to the quantification of CIC-MAN01:

- Procedure (LONG/SHORT): LONG
- Time window: 60 minutes
- Estimated actual time: approximately 30 minutes
- Cues: primary – high containment (CNMT) radiation, high containment pressure, high containment temperature
  (It is assumed that response to three alarms is required.)
- Stress level: HIGH (multiplier of 5 is applied)
- Recovery by: shift technical advisor and senior reactor operator

CIC-MAN01 is quantified as follows:

Item No.	Subtask Description for CIC-MAN01	Mean HEP	Stress Level	Source: Table 30A-4 (Item)	Recovery Factor	Modified HEP
1	Failure to respond to one of three alarms	2.7E-03	5	48	4.05E-02	5.47E-04
2	Select wrong control for one of two instrument-air lines	1.3E-03 x 2 = 2.6E-03	5	29	4.05E-02	5.27E-04

Item No.	Subtask Description for CIC-MAN01	Mean HEP	Stress Level	Source: Table 30A-4 (Item)	Recovery Factor	Modified HEP
3	Omit one of two steps to close instrument-air lines	3.8E-03 x 2 = 7.6E-03	5	9	4.05E-02	1.54E-03
4	Select wrong control for one of two liquid waste lines	1.3E-03 x 2 = 2.6E-03	5	29	4.05E-02	5.27E-04
5	Omit one of two steps to close liquid waste lines	3.8E-03 x 2 = 7.6E-03	5	9	4.05E-02	1.54E-03
6	Select wrong control for one of one containment purge line	1.3E-03	5	29	4.05E-02	2.63E-04
7	Omit one of one step to close containment purge line	3.8E-03	5	9	4.05E-02	7.70E-04
	Total HEP = Item 1 + Item 2 + Item 3 + Item 4 + Item 5 + Item 6 + Item 7					5.71E-03

Notes:
1. Recovery is evaluated by "item 40 in HRA data table" x "stress level" x "0.1"; where item 40 represents recovery by STA, and 0.1 is recovery by SRO.
2. "Modified HEP" = "mean HEP" x "stress level" x "recovery factor"

30.6.13 ADS-MANTEST (Recognize the Need and Reclose ADS Stage MOV)

The ADS-MANTEST operator action evaluates the probability of failure to recognize the need and failure to immediately reclose the automatic depressurization system motor-operated valve during testing of the motor-operated valve, given that the motor-operated valve in series with the tested motor-operated valve failed open and went undetected. The human error probability for this event is used to calculate the initiating event frequency for spurious opening of the automatic depressurization system.

Upon opening the tested motor-operated valve, a high temperature alarm is expected to be annunciated, and a reactor trip (safety injection signal) is expected to be generated. The operator is required to respond to the high temperature alarm and instantly initiate reclosing the motor-operated valve that is being tested; this action is required to prevent a LOCA through the automatic depressurization system.

It is estimated to take about 25 seconds to open a motor-operated valve in automatic depressurization system stage 1, and about 60 seconds for a motor-operated valve in stage 2 or 3. The alarm is expected to be generated when the valve is partially opened, but the motor-operated valve motion cannot be reversed until it is completely open. The operator is expected to recognize the need to reclose the valve while it is being opened; therefore, it is assumed that the operator has about 50 seconds to fully open and reclose the stage 1 valve, and about two minutes for the stage 2 or 3 valve. For this evaluation, the longer time window of two minutes is used for responding to the alarm and reclosing the motor-operated valve; it

is assumed that a significant amount of coolant would not be lost within the 2-minute time window.

The following assumptions are used as input to the quantification of ADS-MANTEST:

- Procedure (LONG/SHORT): SHORT
  (test procedure with CAUTION to reclose MOV if high temperature alarm in ADS line annunciates)
- Time window: 2 minutes
- Estimated actual time: 2 minutes
- Cues: primary: high temperature alarm in ADS line
  (It is assumed that response to one alarm is required)
- Stress level: MODERATE (Multiplier of 2 is applied)
- Recovery: None

ADS-MANTEST is quantified as follows:

Item No.	Subtask Description for ADS-MANTEST	Mean HEP	Stress Level	Source: Table 30A-4 (Item)	Recovery Factor	Modified HEP
1	Failure to respond to one of one alarm	2.7E-04	2	46	N/A	5.4E-04
2	Omit action to close one of one ADS motor-operated valve	1.3E-03	2	8	N/A	2.6E-03
	TOTAL HEP = Item 1 + Item 2					3.14E-03

Note:
1. "Modified HEP" = "mean HEP" x "stress level"

30.6.14 CAN-MAN0S (Locally Close Manual Valve CAS-V204 to Isolate Containment)

The CAN-MAN0S operator action evaluates the probability of failure to recognize the need and failure to close manual valve V204 in the instrument air system for containment isolation given core damage as a result of an event initiated during shutdown conditions. For this scenario, the control room operators are required to recognize the need for containment isolation, and notify the auxiliary operators to close valve V204 locally.

The performance shaping factors used in evaluating CIT-MAN0S are applied to the CAN-MAN0S operator action. Therefore, the following assumptions are used as input to the quantification of CAN-MAN0S:

- Procedure (LONG/SHORT): LONG
- Time window: 60 minutes
- Estimated actual time: approximately 40 minutes

- Cues: primary – high containment radiation; high containment pressure; high containment temperature
  (It is assumed that response to three alarms is required)
- Stress level: HIGH (multiplier of 5 is applied)
- Recovery by: shift technical advisor and senior reactor operator for recovery of control room detection; auxiliary operator for recovery of local action.

CAN-MAN0S is quantified as follows:

Item No.	Subtask Description for CAN-MAN0S	Mean HEP	Stress Level	Source: Table 30A-4 (Item)	Recovery Factor	Modified HEP
1	Failure to respond to one of three alarms	2.7E-03	5	48	4.05E-02	5.47E-04
2	Select wrong local valve to isolate CAS containment penetration (V204)	3.7E-03	5	27	8.00E-01	1.48E-02
3	Omit action to provide suction from SFP	3.8E-03	5	9	8.00E-01	1.52E-02
	Total HEP = Item 1 + Item 2 + Item 3					3.05E-02

Notes:
1. Recovery for control room actions is evaluated by: "item 40 in HRA data table" x "stress level" x "0.1", where item 40 represents recovery by STA, equated to 8.1E-02; 0.1 is recovery by SRO.
2. Recovery for local actions is evaluated by: "item 38 in HRA data table" x "stress level"
3. "Modified HEP" = "mean HEP" x "stress level" x "recovery factor"

30.6.15 CIT-MAN0S (Isolate Containment)

The CIT-MAN0S operator action evaluates the probability of failure to recognize the need and failure to isolate the containment for long-term cooling following a transient during shutdown conditions.

The following assumptions are used as input to the quantification of CIT-MAN0S:

- Procedure (LONG/SHORT): LONG
- Time window: 60 minutes
- Estimated actual time: approximately 20 minutes
- Cues: primary – high containment radiation; high containment pressure, high containment temperature
  (It is assumed that response to three alarms is required.)
- Stress level: HIGH (multiplier of 5 is applied)
- Recovery by: shift technical advisor and senior reactor operator

30.6.16 CMN-MAN01 (Actuate Core Makeup Tank)

The CMN-MAN01 operator action evaluates the probability of failure to actuate the core makeup tank (CMT), if automatic actuation fails during a loss-of-coolant accident.

The time windows for scenarios requiring core makeup tanks actuation are outlined in Subsection 30.6.2. Although a time window of 30 minutes for diagnosis and task performance is defined for the small LOCA/transient initiating event cases, evaluation of core makeup tank related human errors is based on the more limiting case (medium LOCA) with a time window of 20 minutes and an estimated actual time of 15 minutes to diagnose and actuate core makeup tanks. It is conservatively assumed that the crew will take about 15 minutes to go through the procedures to diagnose the event and actuate the core makeup tanks. The shift technical advisor is believed to be present during the event, but no credit is taken for recovery by the shift technical advisor.

The following assumptions are used as input to the quantification of CMN-MAN01:

- Procedure (LONG/SHORT): LONG
- Time window: 15 minutes
- Estimated actual time: approximately 15 minutes
- Cues: cues are addressed in LPM-MAN01 and LPM-MAN02 for applicable initiating events
- Stress level: HIGH (multiplier of 5 is applied)
- Recovery by: senior reactor operator

CIT-MAN0S is quantified as follows:

Item No.	Subtask Description for CIT-MAN0S	Mean HEP	Stress Level	Source: Table 30A-4 (Item)	Recovery Factor	Modified HEP
1	Failure to respond to one of three alarms	2.7E-03	5	48	4.05E-02	5.47E-04
2	Select wrong control for one of two instrument-air lines	1.3E-03 x 2 = 2.6E-03	5	29	4.05E-02	5.27E-04
3	Omit one of two steps to close instrument-air lines	3.8E-03 x 2 = 7.6E-03	5	9	4.05E-02	1.54E-03
4	Select wrong control for one of two liquid waste lines	1.3E-03 x 2 = 2.6E-03	5	29	4.05E-02	5.27E-04
5	Omit one of two steps to close liquid waste lines	3.8E-03 x 2 = 7.6E-03	5	9	4.05E-02	1.54E-03
6	Select wrong control for one of one containment purge line	1.3E-03	5	29	4.05E-02	2.63E-04

Item No.	Subtask Description for CIT-MAN0S	Mean HEP	Stress Level	Source: Table 30A-4 (Item)	Recovery Factor	Modified HEP
7	Omit one of one step to close containment purge line	3.8E-03	5	9	4.05E-02	7.70E-04
8	Omit steps to close remaining containment isolation lines	3.8E-03	5	9	4.05E-02	7.70E-04
	Total HEP = Item 1 + Item 2 + Item 3 + Item 4 + Item 5 + Item 6 + Item 7 + Item 8					6.48E-03

Notes:
1. Recovery is evaluated by "item 40 in HRA data table" x "stress level" x "0.1"; where item 40 represents recovery by STA, and 0.1 is recovery by SRO.
2. "Modified HEP" = "mean HEP" x "stress level" x "recovery factor"
3. It is assumed that the operator is required to isolate about 10 lines for this event. Isolation of three lines is fully modeled in items 2 through 7. Complete dependency is assumed in the actions to isolate the remaining seven lines; this is modeled as an error of omission shown in item 8.

CMN-MAN01 is quantified as follows:

Item No.	Subtask Description for CMN-MAN01	Mean HEP	Stress Level	Source: Table 30A-4 (Item)	Recovery Factor	Modified HEP
1	Select wrong control to align CMT A or B injection line	1.3E-03 x 2 = 2.6E-03	5	29	1.00E-01	1.30E-03
2	Omit step to align CMT A or B injection line	3.8E-03 x 2 = 7.6E-03	5	9	1.00E-01	3.80E-03
	Total HEP = Item 1 + Item 2					5.10E-03

Note:
1. "Modified HEP" = "mean HEP" x "stress level" x "recovery factor"

30.6.17 CMN-REC01 (Actuate the Core Makeup Tanks)

The CMN-REC01 operator action evaluates the probability of failure to actuate the core makeup tanks after core damage.

The following assumptions are used as input to the quantification of CMN-REC01:

- There is a very long time between performing CMN-MAN01 and when CMN-REC01 is required.
- Based on engineering judgment, CMN-REC01 is assumed to have a low dependency on CMN-MAN01.

- The unconditional human error probability for CMN-REC01 is assumed to be similar to the human error probability for CMN-MAN01 (5.10E-03).

Therefore, the conditional human error probability of CMN-REC01 is estimated to be 5.00E-02.

30.6.18 CVN-MAN00 (Align Chemical and Volume Control System)

The CVN-MAN00 operator action evaluates the probability of failure to align the chemical and volume control system (CVS) in auxiliary spray mode following a steam generator tube rupture event.

The following assumptions are used as input to the quantification of CVN-MAN00:

- Procedure (LONG/SHORT): LONG
- Time window: 30 minutes
- Estimated actual time: approximately 10 minutes
- Cues: diagnosis error is addressed in CIB-MAN00
- Stress level: HIGH (multiplier of 5 is applied)
- Recovery by: shift technical advisor and senior reactor operator

CVN-MAN00 is quantified as follows:

Item No.	Subtask Description for CVN-MAN00	Mean HEP	Stress Level	Source: Table 30A-4 (Item)	Recovery Factor	Modified HEP
1	Select wrong control to open valve (CV) on the spray line	1.3E-03	5	29	4.05E-02	2.63E-04
2	Omit step to open CV on spray line	3.8E-03	5	9	4.05E-02	7.70E-04
3	Select wrong control to close valve (CV) on the charging line	1.3E-03	5	29	4.05E-02	2.63E-04
4	Omit step to close valve (CV) on the charging line	3.8E-03	5	9	4.05E-02	7.70E-04
5	Select wrong control to start CVS pump	1.3E-03	5	29	4.05E-02	2.63E-04
6	Omit step to start CVS pump	3.8E-03	5	9	4.05E-02	7.70E-04
	Total HEP = Item 1 + Item 2 + Item 3 + Item 4 + Item 5 + Item 6					3.10E-03

Notes:
1. Recovery is evaluated by "item 40 in HRA data table" x "stress level" x "0.1"; where item 40 represents recovery by STA, and 0.1 is recovery by SRO.
2. "Modified HEP" = "mean HEP" x "stress level" x "recovery factor"

30.6.19 CVN-MAN02 (Align Chemical and Volume Control System)

The CVN-MAN02 operator action evaluates the probability of failure to align the chemical and volume control system in boration mode following an anticipated transient without scram.

The following assumptions are used as input to the quantification of CVN-MAN02:

- Procedure (LONG/SHORT): SHORT
- Time window: 60 minutes
- Estimated actual time: approximately 30 minutes
- Cues: diagnosis error is addressed in ATW-MAN01
- Stress level: HIGH (multiplier of 5 is applied)
- Recovery by: shift technical advisor and senior reactor operator

CVN-MAN02 is quantified as follows:

Item No.	Subtask Description for CVN-MAN02	Mean HEP	Stress Level	Source: Table 30A-4 (Item)	Recovery Factor	Modified HEP
1	Select wrong control to operate three-way valve (V115)	1.3E-03	5	29	4.05E-02	2.63E-04
2	Omit step to operate three-way valve (V115)	1.3E-03	5	8	4.05E-02	2.63E-04
3	Select wrong control to operate flow-control valve (V157)	1.3E-03	5	29	4.05E-02	2.63E-04
4	Omit step to operate flow-control valve (V157)	1.3E-03	5	8	4.05E-02	2.63E-04
5	Select wrong control to start CVS pump	1.3E-03	5	29	4.05E-02	2.63E-04
6	Omit step to start CVS pump	1.3E-03	5	8	4.05E-02	2.63E-04
	Total HEP = Item 1 + Item 2 + Item 3 + Item 4 + Item 5 + Item 6					1.58E-03

Notes:
1. Recovery is evaluated by "item 40 in HRA data table" x "stress level" x "0.1"; where item 40 represents recovery by STA, and 0.1 is recovery by SRO.
2. "Modified HEP" = "mean HEP" x "stress level" x "recovery factor"

30.6.20 CVN-MAN03 (Start Chemical and Volume Control System Pump B)

The CVN-MAN03 operator action evaluates the probability of failure to recognize the need and failure to start the chemical and volume control system pump B, if pump A fails to start

automatically during any accident condition that requires automatic depressurization system makeup.

The following assumptions are used as input to the quantification of CVN-MAN03:

- Procedure (LONG/SHORT): SHORT
- Time window: 30 minutes
- Estimated actual time: approximately 10 minutes
- Cues: primary – low pressurizer level
  (It is assumed that response to three alarms is required.)
- Stress level: HIGH (multiplier of 5 is applied)
- Recovery by: shift technical advisor and senior reactor operator

CVN-MAN03 is quantified as follows:

Item No.	Subtask Description for CVN-MAN03	Mean HEP	Stress Level	Source: Table 30A-4 (Item)	Recovery Factor	Modified HEP
1	Failure to respond to one of three alarms	2.7E-03	5	48	4.05E-02	5.47E-04
2	Select wrong control to start CVS pump B	1.3E-03	5	29	4.05E-02	2.63E-04
3	Omit step to start CVS pump B	1.3E-03	5	8	4.05E-02	2.63E-04
	Total HEP = Item 1 + Item 2 + Item 3					1.07E-03

Notes:
1. Recovery is evaluated by "item 40 in HRA data table" x "stress level" x "0.1"; where item 40 represents recovery by STA equated to 8.1E-02, and 0.1 is recovery by SRO.
2. "Modified HEP" = "mean HEP" x "stress level" x "recovery factor"

30.6.21 ADF-MAN01 (Depressurize the RCS to Refill the Pressurizer)

The ADF-MAN01 operator action evaluates the probability of failure to depressurize the reactor coolant system to refill the pressurizer using the first stage automatic depressurization system valves. In this scenario, a steam generator tube rupture has occurred and depressurization with auxiliary spray has failed; as an alternate way to depressurize the reactor coolant system, the operator is required to use one set of automatic depressurization system first stage valves.

The operator action for using auxiliary spray is evaluated in event CVN-MAN00. ADF-MAN01 is assigned a high dependency on CVN-MAN00. In that regard, ADF-MAN01 has an HEP of 5.0E-01.

30.6.22 SGHL-MAN01 (Isolate Feedwater to Failed Steam Generator)

The SGHL-MAN01 operator action evaluates the probability of failure to recognize the need and failure to trip the chemical and volume control system pump and isolate feedwater to the failed steam generator, given a steam generator tube rupture.

The following assumptions are used as input to the quantification of SGHL-MAN01:

- Procedure (LONG/SHORT): LONG
- Time window: 30 minutes
- Estimated actual time: approximately 10 minutes
- Cues: primary – low steam generator pressure, high steam flow
  (It is assumed that response to two alarms is required.)
- Stress level: HIGH (multiplier of 5 is applied)
- Recovery by: shift technical advisor and senior reactor operator

SGHL-MAN01 is quantified as follows:

Item No.	Subtask Description for SGHL-MAN01	Mean HEP	Stress Level	Source: Table 30A-4 (Item)	Recovery Factor	Modified HEP
1	Failure to respond to one of two alarms	1.6E-03	5	47	4.05E-02	3.24E-04
2	Misread SG level	3.7E-03	5	29	4.05E-02	7.49E-04
3	Omit step to verify SG level	3.8E-03	5	9	4.05E-02	7.70E-04
4	Select wrong control to close isolation valve	1.3E-03	5	29	4.05E-02	2.63E-04
5	Omit step to close isolation valve	3.8E-03	5	9	4.05E-02	7.70E-04
6	Select wrong control to trip CVS pump	1.3E-03	5	29	4.05E-02	2.63E-04
7	Omit step to trip CVS pump	3.8E-03	5	9	4.05E-02	7.70E-04
	Total HEP = Item 1 + Item 2 + Item 3 + Item 4 + Item 5 + Item 6 + Item 7					3.91E-03

Notes:

1. Recovery is evaluated by "item 40 in HRA data table" x "stress level" x "0.1"; where item 40 represents recovery by STA, and 0.1 is recovery by SRO.
2. "Modified HEP" = "mean HEP" x "stress level" x "recovery factor"

30.6.23 CAN-MAN01 (Start Standby Compressor)

The CAN-MAN01 operator action evaluates the probability of failure to recognize the need and failure to start the standby compressor, given a loss-of-coolant accident, loss of offsite power, or transient.

The following assumptions are used as input to the quantification of CAN-MAN01:

- Procedure (LONG/SHORT): LONG
- Time window: 30 minutes
- Estimated actual time: approximately 10 minutes
- Cues: primary – low instrument-air header pressure
  (Based on engineering judgment, it is assumed that response to three alarms is required.)
- Stress level: HIGH (multiplier of 5 is applied)
- Recovery by: shift technical advisor and senior reactor operator

CAN-MAN01 is quantified as follows:

Item No.	Subtask Description for CAN-MAN01	Mean HEP	Stress Level	Source: Table 30A-4 (Item)	Recovery Factor	Modified HEP
1	Failure to respond to one of three alarms	2.7E-03	5	48	4.05E-02	5.47E-04
2	Select wrong control to start standby compressor	1.3E-03	5	29	4.05E-02	2.63E-04
3	Omit step to start standby compressor	1.3E-03	5	8	4.05E-02	2.63E-04
	Total HEP = Item 1 + Item 2 + Item 3					1.07E-03

Notes:
1. Recovery is evaluated by "item 40 in HRA data table" x "stress level" x "0.1"; where item 40 represents recovery by STA, and 0.1 is recovery by SRO.
2. "Modified HEP" = "mean HEP" x "stress level" x "recovery factor"

30.6.24 REN-MAN02 (Initiate Recirculation)

The REN-MAN02 operator action evaluates the probability of failure to recognize the need and failure to open the recirculation valves during a loss-of-coolant accident or transient.

The following assumptions are used as input to the quantification of REN-MAN02:

- Procedure (LONG/SHORT): LONG
- Time window: > 60 minutes

- Estimated actual time: approximately 10 minutes
- Cues: primary – low-low in-containment refueling water storage tank level
  (Based on engineering judgment, it is assumed that response to five alarms is required.)
- Stress level: HIGH (multiplier of 5 is applied)
- Recovery by: shift technical advisor and senior reactor operator
- It is assumed that slack time close to one hour exists for this task. Because of the uncertainty in this approximation, high dependency is assumed, and the recovery factor of 0.54 is applied.

REN-MAN02 is quantified as follows:

Item No.	Subtask Description for REN MAN02	Mean HEP	Stress Level	Source: Table 30A-4 (Item)	Recovery Factor	Modified HEP
1	Failure to respond to one of five alarms	8.0E-03	5	50	2.19E-02	8.76E-04
2	Select wrong control for one of two recirculation lines MOVs	1.3E-03 x 2 = 2.6E-03	5	29	2.19E-02	2.85E-04
3	Omit one of two steps to open recirculation lines MOVs	3.8E-03 x 2 = 7.6E-03	5	9	2.19E-02	8.32E-04
	Total HEP = Item 1 + Item 2 + Item 3					1.99E-03

Notes:
1. Recovery is evaluated by "item 40 in HRA data table" x "stress level" x "0.1" x "0.54"; where item 40 represents recovery by STA, 0.1 is recovery by SRO, and 0.54 is slack time credit beyond one hour.
2. "Modified HEP" = "mean HEP" x "stress level" x "recovery factor"

30.6.25 REN-MAN03 (Initiate Recirculation)

The REN-MAN03 operator action evaluates the probability of failure to recognize the need and failure to open the recirculation valves to flood the reactor cavity after core damage.

The following assumptions are used as input to the quantification of REN-MAN03:

- Procedure (LONG/SHORT): LONG
- Time window: 20 minutes
- Estimated actual time: approximately 10 minutes
- Cues: primary – high containment radiation; high hot leg temperature
  (It is assumed that response to two alarms is required.)
- Stress level: HIGH (multiplier of 5 is applied)
- Recovery by: shift technical advisor and senior reactor operator

REN-MAN03 is quantified as follows:

Item No.	Subtask Description for REN-MAN03	Mean HEP	Stress Level	Source: Table 30A-4 (Item)	Recovery Factor	Modified HEP
1	Failure to respond to one of two alarms	1.6E-03	5	47	4.05E-02	3.24E-04
2	Misread hot leg temperature	1.2E-03	5	18	4.05E-02	2.43E-04
3	Omit step to verify hot leg temperature	3.8E-03	5	9	4.05E-02	7.70E-04
4	Select wrong control for one of two recirculation lines motor-operated valves (MOVs)	1.3E-03 x 2 = 2.6E-03	5	29	4.05E-02	5.27E-04
5	Omit one of two steps to open recirculation lines MOVs	3.8E-03 x 2 = 7.6E-03	5	9	4.05E-02	1.54E-03
	Total HEP = Item 1 + Item 2 + Item 3 + Item 4 + Item 5					3.40E-03

Notes:
1. Recovery is evaluated by "item 40 in HRA data table" x "stress level" x "0.1"; where item 40 represents recovery by STA, and 0.1 is recovery by SRO.
2. "Modified HEP" = "mean HEP" x "stress level" x "recovery factor"

30.6.26 IWN-MAN00 (Operate In-Containment Refueling Water Storage Tank Motor-Operated Valves)

The IWN-MAN00 operator action evaluates the probability of failure to recognize the need and failure to open the in-containment refueling water storage tank motor-operated valves during shutdown conditions, given that the normal residual heat removal system is unavailable.

The following assumptions are used as input to the quantification of IWN-MAN00:

- Procedure (LONG/SHORT): LONG
- Time window: 18 minutes
- Estimated actual time: approximately 5 minutes
- Cues: primary – automatic gravity injection actuation alarm (occurs simultaneously with the low hot-leg water level alarm that generates the acutation signal)
  (It is assumed that response to one alarm is required.)
- Stress level: HIGH (multiplier of 5 is applied)
- Recovery by: shift technical advisor and senior reactor operator

IWN-MAN00 is quantified as follows:

Item No.	Subtask Description for IWN-MAN00	Mean HEP	Stress Level	Source: Table 30A-4 (Item)	Recovery Factor	Modified HEP
1	Failure to respond to one of one alarm	2.7E-04	5	46	4.05E-02	5.47E-05
2	Select wrong control for one of two recirculation lines MOVs	1.3E-03 x 2 = 2.6E-03	5	29	4.05E-02	5.28E-04
3	Omit one of two steps to open recirculation lines MOVs	3.8E-03 x 2 = 7.6E-03	5	9	4.05E-02	1.54E-03
	Total HEP = Item 1 + Item 2 + Item 3					2.12E-03

Notes:
1. Recovery is evaluated by "item 40 in HRA data table" x "stress level" x "0.1"; where item 40 represents recovery by STA, and 0.1 is recovery by SRO.
2. "Modified HEP" = "mean HEP" x "stress level" x "recovery factor"

30.6.27 RHN-MAN01 (Align Normal Residual Heat Removal System)

The RHN-MAN01 operator action evaluates the probability of failure to recognize the need and failure to align the normal residual heat removal (RNS) system after automatic depressurization system actuation, during a loss-of-coolant accident, loss of offsite power, or transient. For this scenario, the plant is in reactor coolant system (RCS) cooling mode.

Operator action RHN-MAN01 is tied to the operator actions for diagnosis and actuation of the core makeup tanks and/or automatic depressurization system (evaluated in LPM-MAN01, LPM-MAN02, CMN-MAN01 and ADN-MAN01). The AP1000 emergency operating procedures are designed such that the operators are asked to: a) ensure core makeup tanks actuation in step 6 of AE-0 (Reactor Trip or Safety Injection); b) ensure automatic depressurization system actuation in steps 11a through 11e; and c) align normal residual heat removal system to inject cask loading pit to reactor coolant system in step 11f. These steps are part of the "Immediate Action" steps in AE-0 consisting of steps 1 through 13. Therefore, these actions are expected to be performed very early in the event.

The diagnosis for determining the need for automatic depressurization system actuation is also applicable to recognizing the need for normal residual heat removal system alignment; as stated above, automatic depressurization system actuation and normal residual heat removal system alignment are substeps of AE-0, step 11 (Check if ADS Should Be Actuated). However, diagnosis is conservatively modeled in RHN-MAN01 for recognizing the need for normal residual heat removal system alignment.

The time window of 20 minutes, for actuating core makeup tanks and/or automatic depressurization system during a medium LOCA, is the more limiting time window.

Therefore, this same 20-minute time window is applied to the evaluation for aligning the normal residual heat removal system.

The following assumptions are used as input to the quantification of RHN-MAN01:

- Procedure (LONG/SHORT): LONG
- Time window: 20 minutes
- Estimated actual time: approximately 15 minutes
- Cues: primary – reactor coolant system pressure decreasing, core makeup tank actuation, automatic depressurization system valves open
  (It is assumed that response to three different alarms associated with automatic depressurization system actuation is required.)
- Stress level: HIGH (multiplier of 5 is applied)
- Recovery by: shift technical advisor and senior reactor operator

RHN-MAN01 is quantified as follows:

Item No.	Subtask Description for RHN-MAN01	Mean HEP	Stress Level	Source: Table 30A-4 (Item)	Recovery Factor	Modified HEP
1	Failure to respond to one of three alarms	2.7E-03	5	48	4.05E-02	5.47E-04
2	Look at wrong equipment status to verify ADS valves open	1.3E-03	5	29	4.05E-02	2.63E-04
3	Omit step to check status of ADS valves	3.8E-03	5	9	4.05E-02	7.70E-04
4	Set multiposition switch to wrong setting to align RNS	2.7E-03	5	34	4.05E-02	5.47E-04
5	Omit step to align RNS	3.8E-03	5	9	4.05E-02	7.70E-04
	Total HEP = Item 1 + Item 2 + Item 3 + Item 4 + Item 5					2.90E-03

Notes:
1. Recovery is evaluated by "item 40 in HRA data table" x "stress level" x "0.1"; where item 40 represents recovery by STA equated to 8.1E-02, and 0.1 is recovery by SRO.
2. "Modified HEP" = "mean HEP" x "stress level" x "recovery factor"

30.6.28 RHN-MANDIV (Align Normal Residual Heat Removal System)

The RHN-MANDIV operator action evaluates the probability of failure to create a diversion path to the in-containment refueling water storage tank during alignment of the normal residual heat removal system, and failure to recognize the error and take corrective action to terminate the event by reclosing the valve.

The following assumptions are used as input to the quantification of RHN-MANDIV:

- Procedure (LONG/SHORT): LONG
- Time window: 30 minutes (from valve is opened)
- Estimated actual time: approximately 10 minutes
- Cues: primary – low hot leg level
  (It is assumed that response to one alarm associated with low hot leg level is required.)
- Stress level: MODERATE, during initial commission error (multiplier of 2 is applied)
  HIGH, during recovery period (multiplier of 5 is applied)
- Recovery by: senior reactor operator and shift technical advisor present only during later part of recovery period.

The calculated human error probability for this operator action is 2.60E-06. However, the lower bound human error probability of 1.0E-05, used in the human reliability analysis, is assigned to this operator action

RHN-MANDIV is quantified as follows:

Item No.	Subtask Description for RHN-MANDIV	Mean HEP	Stress Level	Source: Table 30A-4 (Item)	Recovery Factor	Modified HEP
1	Select wrong control to align RNS	1.3E-03	2	29	N/A	2.60E-03
2	Failure to respond to one alarm	2.7E-04	5	46	1.00E-01	1.35E-04
3	Misread display for low reactor coolant system hot leg level	1.2E-03	5	18	1.00E-01	6.00E-04
4	Select wrong control to close diversion path	1.3E-03	5	29	4.05E-02	2.63E-04
	Total HEP = Item 1 x (Item 2 + Item 3 + Item 4)					2.60E-06

Notes:
1. Recovery for items 2 and 3 is credited for SRO only; 0.1 is recovery by SRO.
2. Recovery for item 4 is evaluated by "item 40 in HRA data table" x "stress level" x "0.1"; where item 40 represents recovery by STA equated to 8.1E-02, and 0.1 is recovery by SRO.
3. "Modified HEP" = "mean HEP" x "stress level" x "recovery factor"

30.6.29 RHN-MAN02/RHN-MAN03 (Align Normal Residual Heat Removal System)

The RHN-MAN02 operator action evaluates the probability of failure to recognize the need and failure to manually transfer the normal residual heat removal system pumps to the diesel generator power source, following loss-of-offsite power with failure of automatic transfer, during shutdown conditions.

The RHN-MAN03 operator action evaluates the probability of failure to recognize the need and failure to manually restart the normal residual heat removal system pumps following grid recovery after a loss of offsite power.

The following assumptions are used as input to the quantification of RHN-MAN02/ RHN-MAN03:

- Procedure (LONG/SHORT): LONG
- Time window: 60 minutes
- Estimated actual time: approximately 10 minutes
- Cues: primary – no flow from normal residual heat removal system secondary – low hot leg water level
  (It is assumed that response to about five different alarms is required.)
- Stress level: HIGH (multiplier of 5 is applied)
- Recovery by: shift technical advisor and senior reactor operator

For loss-of-offsite power during drained conditions, the time window is 30 minutes for performing this task, whereas, during hot/cold shutdown conditions, the time window is 60 minutes. The human error probabilities are the same for both plant conditions because slack time recovery credit is the same for both cases.

RHN-MAN02/RHN-MAN03 is quantified as follows:

Item No.	Subtask Description for RHN-MAN02/RHN-MAN03	Mean HEP	Stress Level	Source: Table 30A-4 (Item)	Recovery Factor	Modified HEP
1	Failure to respond to one of five alarms	8.0E-03	5	50	4.05E-02	1.62E-03
2	Misread RNS system flow indication	3.7E-03	5	17	4.05E-02	7.50E-04
3	Omit step to verify loss of flow from RNS system	3.8E-03	5	9	4.05E-02	7.0E-04
4	Select wrong control to load RNS pump onto diesel generator	1.3E-03	5	29	4.05E-02	2.63E-04
5	Omit step to load RNS pump onto diesel generator	3.8E-03	5	9	4.05E-02	7.70E-04
	Total HEP = Item 1 + Item 2 + Item 3 + Item 4 + Item 5					4.17E-03

Notes:
1. Recovery is evaluated by "item 40 in HRA data table" x "stress level" x "0 1" x "0.54"; where item 40 represents recovery by STA equated to 8.1E-02, 0.1 is recovery by SRO, and 0.54 is credit for slack time beyond one hour.
2. "Modified HEP" = "mean HEP" x "stress level" x "recovery factor"

30.6.30 PCN-MAN01 (Actuate Passive Containment Cooling System)

The PCN-MAN01 operator action evaluates the probability of failure to recognize the need and failure to actuate the passive containment cooling system (PCCS) air-operated valves (AOVs) if automatic actuation fails, given transient or loss of offsite power.

The following assumptions are used as input to the quantification of PCN-MAN01:

- Procedure (LONG/SHORT): LONG
- Time window: five hours
- Estimated actual time: approximately two hours
- Cues: primary – high containment pressure
  (Based on engineering judgment, it is assumed that response to three alarms is required.)
- Stress level: HIGH (multiplier of 5 is applied)
- Recovery by: shift technical advisor and senior reactor operator

PCN-MAN01 is quantified as follows:

Item No.	Subtask Description for PCN-MAN01	Mean HEP	Stress Level	Source: Table 30A-4 (Item)	Recovery Factor	Modified HEP
1	Failure to respond to one of three alarms	2.7E-03	5	48	8.51E-03	1.15E-04
2	Select wrong control for two-out-of-two PCCS AOVs (moderate dependency assumed between actions)	1.3E-03 x 0.15 = 1.95E-4	5	29	8.51E-03	8.29E-06
3	Omit steps to actuate both AOVs (moderate dependency assumed between actions)	3.8E-03 x 0.15 = 5.7E-04	5	9	8.51E-03	2.43E-05
	Total HEP = Item 1 + Item 2 + Item 3					1.48E-04

Notes:

1. Recovery is evaluated by "item 40 in HRA data table" x "stress level" x "0.1" x "0.21"; where item 40 represents recovery by STA equated to 8.1E-02, 0.1 is recovery by SRO, and 0.21 is credit for slack time beyond one hour.
2. "Modified HEP" = "mean HEP" x "stress level" x "recovery factor"

30.6.31 HPM-MAN01 (Diagnose Need for High Pressure Heat Removal)

The HPM-MAN01 operator action evaluates the probability of failure to recognize the need high-pressure decay heat removal following loss of main feedwater during an accident.

The following assumptions are used as input to the quantification of HPM-MAN01:

- Procedure (LONG/SHORT): LONG
- Time window: 30 minutes
- Estimated actual time: approximately 10 minutes
- Cues: primary – low steam generator level; high hot leg temperature
  (Based on engineering judgment, it is assumed that response to five alarms is required.)
- Stress level: MODERATE (multiplier of 2 is applied)
- Recovery by: shift technical advisor and senior reactor operator

HPM-MAN01 is quantified as follows:

Item No.	Subtask Description for HPM-MAN01	Mean HEP	Stress Level	Source: Table 30A-4 (Item)	Recovery Factor	Modified HEP
1	Failure to respond to one-out-of-five alarms	8.0E-03	2	50	1.62E-02	2.59E-04
2	Misread steam generator level	3.7E-03	2	17	1.62E-02	1.20E-04
3	Omit step to verify SG level	3.8E-03	2	9	1.62E-02	1.23E-04
	Total HEP = Item 1 + Item 2 + Item 3					5.02E-04

Notes:
1. Recovery is evaluated by "item 40 in HRA data table" x "stress level" x "0.1"; where item 40 represents recovery by STA equated to 8.1E-02, and 0.1 is recovery by SRO.
2. "Modified HEP" = "mean HEP" x "stress level" x "recovery factor"

30.6.32 PRN-MAN01 (Align Passive Residual Heat Removal System)

The PRN-MAN01 operator action evaluates the probability of failure to align the passive residual heat removal system, given loss of main feedwater during a transient.

The following assumptions are used as input to the quantification of PRN-MAN01:

- Procedure (LONG/SHORT): LONG
- Time window: 30 minutes
- Estimated actual time: approximately 15 minutes
- Cues: cues are addressed in HPM-MAN01
- Stress level: MODERATE; (multiplier of 2 is applied)
- Recovery by: shift technical advisor and senior reactor operator

PRN-MAN01 is quantified as follows:

Item No.	Subtask Description for PRN-MAN01	Mean HEP	Stress Level	Source: Table 30A-4 (Item)	Recovery Factor	Modified HEP
1	Misread steam generator level	3.7E-03	2	17	1.62E-02	1.20E-04
2	Omit step to verify SG level	3.8E-03	2	9	1.62E-02	1.23E-04
3	Select wrong control to align PRHR	1.3E-03	2	29	1.62E-02	4.21E-05
4	Omit step to align PRHR	3.8E-03	2	9	1.62E-02	1.23E-04
	Total HEP = Item 1 + Item 2 + Item 3 + Item 4					4.08E-04

Notes:
1. Recovery is evaluated by "item 40 in HRA data table" x "stress level" x "0.1"; where item 40 represents recovery by STA equated to 8.1E-02, and 0.1 is recovery by SRO.
2. "Modified HEP" = "mean HEP" x "stress level" x "recovery factor"

30.6.33 PRN-MAN02 (Align Passive Residual Heat Removal System)

The PRN-MAN02 operator action evaluates the probability of failure to align the passive residual heat removal system, given loss of main feedwater during a loss-of-coolant accident or loss of offsite power.

The following assumptions are used as input to the quantification of PRN-MAN02:

- Procedure (LONG/SHORT): LONG
- Time window: 30 minutes
- Estimated actual time: approximately 15 minutes
- Cues: diagnosis error is addressed in HPM-MAN01
- Stress level: HIGH (multiplier of 5 is applied)
- Recovery by: shift technical advisor and senior reactor operator

PRN-MAN02 is quantified as follows:

Item No.	Subtask Description for PRN-MAN02	Mean HEP	Stress Level	Source: Table 30A-4 (Item)	Recovery Factor	Modified HEP
1	Misread steam generator level	3.7E-03	5	17	4.05E-02	7.49E-04
2	Omit step to verify steam generator level decreasing	3.8E-03	5	9	4.05E-02	7.70E-04

Item No.	Subtask Description for PRN-MAN02	Mean HEP	Stress Level	Source: Table 30A-4 (Item)	Recovery Factor	Modified HEP
3	Select wrong control to align PRHR system	1.3E-03	5	29	4.05E-02	2.63E-04
4	Omit step to align PRHR system	3.8E-03	5	9	4.05E-02	7.70E-04
	Total HEP = Item 1 + Item 2 + Item 3 + Item 4					2.55E-03

Notes:
1. Recovery is evaluated by "item 40 in HRA data table" x "stress level" x "0.1"; where item 40 represents recovery by STA, and 0.1 is recovery by SRO.
2. "Modified HEP" = "mean HEP" x "stress level" x "recovery factor"

30.6.34 PRN-MAN03 (Align Passive Residual Heat Removal System)

The PRN-MAN03 operator action evaluates the probability of failure to control the passive residual heat removal system operation, given a main steam line break or main steam line valve stuck-open event.

The following assumptions are used as input to the quantification of PRN-MAN03:

- Procedure (LONG/SHORT): LONG
- Time window: > 2 hours
- Estimated actual time: approximately 30 minutes
- Cues: primary – high neutron flux
  (Many alarm annunciations are expected for this incident. Based on engineering judgment, it is assumed that response to five alarms is required.)
- Stress level: HIGH (multiplier of 5 is applied)
- Recovery by: shift technical advisor and senior reactor operator

The operator action to quickly diagnose the steam line break and turn off (or block the actuation of) passive residual heat removal in order to minimize cooldown and prevent a return to criticality is not included in the human reliability analysis model. However, this is accounted for in the dependency evaluation; PRN-MAN03 is assessed as having a high dependency on CVN-MAN03. It is assumed that the time window to block passive residual heat removal actuation is less than five minutes, and the action can be performed within one minute from the cue response. This is reflected in the dependency evaluation in Table 30-2. The conditional human error probability evaluated for PRN-MAN03 is 5.0E-01.

PRN-MAN03 is quantified as follows:

Item No.	Subtask Description for PRN-MAN03	Mean HEP	Stress Level	Source: Table 30A-4 (Item)	Recovery Factor	Modified HEP
1	Failure to respond to one of five alarms	8.0E-03	5	50	8.51E-03	3.40E-04
2	Misread neutron flux	3.7E-03	5	17	8.51E-03	1.57E-04
3	Omit step to check neutron flux reading	3 8E-03	5	9	8.51E-03	1.62E-04
4	Select wrong control to operate PRHR system	1.3E-03	5	29	8.51E-03	5.53E-05
5	Omit step to control PRHR system	3.8E-03	5	9	8.51E-03	1.62E-04
	Total HEP = Item 1 + Item 2 + Item 3 + Item 4 + Item 5					8.76E-04

Notes:
1. Recovery is evaluated by ("item 40 in HRA data table" x "stress level" x "0.1") x 0.21; where item 40 represents recovery by STA, 0.1 is recovery by SRO, and 0.21 is applied for slack time beyond one hour.
2. "Modified HEP" = "mean HEP" x "stress level" x "recovery factor."

30.6.35 PRI-MAN01 (Isolate Failed Passive Residual Heat Removal Heat Exchanger)

The PRI-MAN01 operator action evaluates the probability of failure to recognize the need and failure to isolate the failed heat exchanger (HX) following passive residual heat removal system tube rupture before automatic depressurization system actuation. For this scenario, one chemical and volume control system pump and one core makeup tank are in operation.

The following assumptions are used as input to the quantification of PRI-MAN01:

- Procedure (LONG/SHORT): LONG
- Time window: 35 minutes
- Estimated actual time: approximately 10 minutes
- Cues: primary – high hot leg temperature; low pressurizer pressure; low pressurizer level
  (It is assumed that response to three alarms is required.)
- Stress level: MODERATE (multiplier of 2 is applied)
- Recovery by: shift technical advisor and senior reactor operator

PRI-MAN01 is quantified as follows:

Item No.	Subtask Description for PRI-MAN01	Mean HEP	Stress Level	Source: Table 30A-4 (Item)	Recovery Factor	Modified HEP
1	Failure to respond to one of three alarms	2.7E-03	2	48	1.62E-02	8.75E-05
2	Misread flow indication to the RCS	3.7E-03	2	17	1.62E-02	1.20E-04
3	Omit step to verify flow to the RCS	3.8E-03	2	9	1.62E-02	1.23E-04
4	Select wrong control to close HX isolation valve	1.3E-03	2	29	1.62E-02	4.21E-05
5	Omit step to close HX isolation valve	3.8E-03	2	9	1.62E-02	1.23E-04
	Total HEP = Item 1 + Item 2 + Item 3 + Item 4 + Item 5					4.96E-04

Notes:
1. Recovery is evaluated by "item 40 in HRA data table" x "stress level" x "0.1"; where item 40 represents recovery by STA equated to 8.1E-02, and 0.1 is recovery by SRO.
2. "Modified HEP" = "mean HEP" x "stress level" x "recovery factor"

30.6.36 REN-MAN04 (Initiate Recirculation)

The REN-MAN04 operator action evaluates the probability of failure to recognize the need and failure to open the recirculation valves during a loss-of-coolant accident or transient, if the IRWST low-level signal fails - preventing automatic actuation of sump recirculation.

The calculated human error probability for this task is 4.77E-03; however, a conservative HEP of 1.0E-02 is used for this operator action in the PRA quantification.

The following assumptions are used as input to the quantification of REN-MAN04:

- Procedure (LONG/SHORT): LONG
- Time window: Approximately 60 minutes; however, a conservative time window of 30 minutes is assumed, starting from when low IRWST level is reached
- Diagnosis: THERP cognitive model from Table 20-3 of the Handbook (Reference 30-1) is used for diagnosis within 30 minutes; action execution is expected to be completed in less than 1 minute

- Cues: primary – high containment sump level
  secondary – low reactor coolant system pressure and IRWST injection check valves indicating open position
  (It is assumed that one alarm pertaining to containment sump level is provided to which the operators are expected to respond; however, diagnosis recovery by responding to this alarm is not credited)
- Stress level: HIGH (multiplier of 5 is applied)
- Recovery by: shift technical advisor and senior reactor operator
- The recirculation squib and motor-operated valves are expected to be manually actuated through one function level control. However, for this evaluation, it is conservatively assumed that the operators are required to operate two controls to actuate the recirculation valves.

REN-MAN04 is quantified as follows:

Item No.	Subtask Description for REN-MAN04	Mean HEP	Stress Level	Source: Table 30A-4 (Item)	Recovery Factor	Modified HEP
1	Failure to recognize the need for sump recirculation within 30 minutes	2.7E-03	N/A	THERP 20-3, item 4	N/A	2.7E-03
2	Select wrong control for one of two sets of recirculation valves	1.3E-03 x 2 = 2.6E-03	5	29	4 05E-02	5.27E-04
3	Omit one of two steps to open recirculation lines MOVs	3.8E-03 x 2 = 7.6E-03	5	9	4.05E-02	1.54E-03
	Total HEP = Item 1 + Item 2 + Item 3					4.77E-03

Notes:
1. Recovery is evaluated by: "item 40 in HRA data table" x "stress level" x "0.1"; where, item 40 represents recovery by STA; 0.1 is recovery by SRO.
2. "Modified HEP" = "mean HEP" x "stress level" x "recovery factor"

30.6.37 RCN-MAN01 (Trip Reactor Coolant Pumps)

The RCN-MAN01 operator action evaluates the probability of failure to trip the four reactor coolant pumps if automatic trip fails during a small loss-of-coolant accident or transient.

The following assumptions are used as input to the quantification of RCN-MAN01:

- Procedure (LONG/SHORT): LONG
- Time window: 20 minutes
- Estimated actual time: approximately 15 minutes
- Cues: cues are addressed in LPM-MAN01
- Stress level: HIGH (multiplier of 5 is applied)
- Recovery by: shift technical advisor and senior reactor operator

The operator action to trip the reactor coolant pumps is based on the timing mechanism associated with actuation of the core makeup tanks. Therefore, the times for the limiting case for core makeup tank actuation (i.e., medium loss-of-coolant accident with a time window of 20 minutes and actual time of 15 minutes) is applied to the RCN-MAN01 operator action.

RCN-MAN01 is quantified as follows:

Item No.	Subtask Description for RCN-MAN01	Mean HEP	Stress Level	Source: Table 30A-4 (Item)	Recovery Factor	Modified HEP
1	Select wrong control for one of four RCS pumps	1.3E-03 x 4 = 5.2E-03	5	29	4.05E-02	1.05E-03
2	Omit step to trip one of four RCS pumps	3.8E-03 x 4 = 1.52E-2	5	9	4.05E-02	3.08E-03
	Total HEP = Item 1 + Item 2					4.13E-03

Notes:
1. Recovery is evaluated by "item 40 in HRA data table" x "stress level" x "0.1"; where item 40 represents recovery by STA equated to 8.1E-02, and 0.1 is recovery by SRO.
2. "Modified HEP" = "mean HEP" x "stress level" x "recovery factor."

30.6.38 ATW-MAN01 (Manually Insert Control Rods)

The ATW-MAN01 operator action evaluates the probability of failure to manually step-in the control rods within one minute, given manual scram failure during anticipated transient without scram (ATWS). The time window for ATW-MAN01 requires that the action to step-in the rods be initiated within 1 minute from the ATWS initiating event.

The following assumptions are used as input to the quantification of ATW-MAN01:

- Procedure (LONG/SHORT): SHORT
- Time window: one minute
- Estimated actual time: one minute
- Cues: primary – rod bottom lights not lit; reactor trip and bypass breakers closed; rod position indicators not at zero; neutron flux not decreasing
- Stress level: HIGH (multiplier of 5 is applied)
- Recovery by: no recovery applied

ATW-MAN01 is quantified as follows:

Item No.	Subtask Description for ATW-MAN01	Mean HEP	Stress Level	Source: Table 30A-4 (Item)	Recovery Factor	Modified HEP
1	Failure to respond to one of four alarms	5.3E-03	5	49	N/A	2.65E-02
2	Omit action to step-in control rods	1.3E-03	5	8	N/A	6.50E-03
	Total HEP = Item 1 + Item 2					3.30E-02

Notes:
1. Recovery is evaluated by "item 40 in HRA data table" x "stress level" x "0.1"; where item 40 represents recovery by STA equated to 8.1E-02, and 0.1 is recovery by SRO.
2. "Modified HEP" = "mean HEP" x "stress level" x "recovery factor."

30.6.39 ATW-MAN03 (Manually Trip the Reactor through Protection and Safety Monitoring System in One Minute)

The ATW-MAN03 operator action evaluates the probability of failure to manually trip the reactor through the protection and safety monitoring system within one minute, given anticipated transient without scram.

The following assumptions are used as input to the quantification of ATW-MAN03:

- Procedure (LONG/SHORT): SHORT
- Time window: one minute
- Estimated actual time: approximately 30 seconds
- Cues: primary – rod bottom lights not lit; reactor trip and bypass breakers closed; rod position indicators not at zero; neutron flux not decreasing
  (The human error probabilities for the cues listed previously are multiplicative. However, only one cue is considered in the human reliability analysis quantification; this approach is conservative.)
  (It is assumed that response to four alarms is required; this is also believed to be a conservative assumption.)
- Stress level: HIGH (multiplier of 5 is applied)
- Recovery by: no recovery applied

ATW-MAN03 is quantified as follows:

Item No.	Subtask Description for ATW-MAN03	Mean HEP	Stress Level	Source: Table 30A-4 (Item)	Recovery Factor	Modified HEP
1	Failure to respond to one of four alarms	5.3E-03	5	49	N/A	2.65E-02
2	Misread neutron flux	1.2E-03	5	24	N/A	6.00E-03
3	Omit step to verify neutron flux increasing	1.3E-03	5	8	N/A	6.50E-03
4	Select wrong control to scram the reactor	1.3E-03	5	29	N/A	6.50E-03
5	Omit step to push scram button	1.3E-03	5	8	N/A	6.50E-03
	Total HEP = Item 1 + Item 2 + Item 3 + Item 4 + Item 5					5.20E-02

Note:
1. "Modified HEP" = "mean HEP" x "stress level"

30.6.40 ATW-MAN04 (Manually Trip the Reactor through Diverse Actuation System in One Minute)

The ATW-MAN04 operator action evaluates the probability of failure to manually trip the reactor through the diverse actuation system (DAS) within one minute, given anticipated transient without scram. The operator is expected to trip the reactor through the diverse actuation system if the earlier attempt to trip the reactor through the protection and safety monitoring system fails.

The same cues used by the operator for ATW-MAN03 are assumed to be available to the operator for ATW-MAN04. It is also assumed that ATW-MAN04 is attempted immediately after recognizing that ATW-MAN03 has failed. The stress level for ATW-MAN04 is assumed to be high.

Therefore, the unconditional human error probability of 5.20E-02, evaluated for ATW-MAN03, is applied to ATW-MAN04. Based on the scenario, ATW-MAN04 is assessed as having a high dependency on ATW-MAN03; the conditional human error probability for ATW-MAN04 is evaluated to be 5.26E-01.

30.6.41 ATW-MAN05 (Manually Trip the Reactor through Protection and Safety Monitoring System in Seven Minutes)

The ATW-MAN05 operator action evaluates the probability of failure to manually trip the reactor through the protection and safety monitoring system within seven minutes, given an anticipated transient without scram.

The following assumptions are used as input to the quantification of ATW-MAN05:

- Procedure (LONG/SHORT): SHORT
- Time window: seven minutes
- Estimated actual time: approximately 30 seconds
- Cues: primary – rod bottom lights not lit; reactor trip and bypass breakers closed; rod position indicators not at zero; neutron flux not decreasing
  (The human error probabilities for the cues listed previously are multiplicative. However, only one cue is considered in the human reliability analysis quantification; this approach is conservative.)
  (It is assumed that response to four alarms is required; this is also believed to be a conservative assumption.)
- Stress level: HIGH (multiplier of 5 is applied)
- Recovery by: senior reactor operator

ATW-MAN05 is quantified as follows:

Item No.	Subtask Description for ATW-MAN05	Mean HEP	Stress Level	Source: Table 30A-4 (Item)	Recovery Factor	Modified HEP
1	Failure to respond to one of four alarms	5.3E-03	5	49	1.0E-01	2.65E-03
2	Misread neutron flux	1.2E-03	5	24	1.0E-01	6.00E-04
3	Omit step to verify neutron flux increasing	1.3E-03	5	8	1.0E-01	6.50E-04
4	Select wrong control to scram the reactor	1.3E-03	5	29	1.0E-01	6.50E-04
5	Omit step to push scram button	1.3E-03	5	8	1.0E-01	6.50E-04
	Total HEP = Item 1 + Item 2 + Item 3 + Item 4 + Item 5					5.20E-03

Note:
1. "Modified HEP" = "mean HEP" x "stress level" x "recovery factor"

30.6.42 ATW-MAN06 (Manually Trip the Reactor through Diverse Actuation System In Seven Minutes)

The ATW-MAN06 operator action evaluates the probability of failure to manually trip the reactor through the diverse actuation system within seven minutes, given anticipated transient without scram. The operator is expected to trip the reactor through the diverse actuation system if the earlier attempt to trip the reactor through the protection and safety monitoring system fails.

The same cues used by the operator for ATW-MAN05 are assumed to be available to the operator for ATW-MAN06. It is also assumed that ATW-MAN06 is attempted immediately after recognizing that ATW-MAN05 has failed. The stress level for ATW-MAN04 is assumed to be high.

Therefore, the unconditional human error probability of 5.20E-03, evaluated for ATW-MAN05, is applied to ATW-MAN06. Based on the scenario, ATW-MAN06 is assessed as having a high dependency on ATW-MAN05; the conditional human error probability for ATW-MAN06 is evaluated to be 5.00E-01.

30.6.43 RTN-MAN01 (Perform Controlled Reactor Shutdown)

The RTN-MAN01 operator action evaluates the probability of failure to perform a controlled shutdown of the reactor during an accident.

For this case, the chemical and volume control system (CVS) function succeeded and the operator is aware that chemical and volume control system makeup will last at least three hours. The operator is required to follow procedures and perform a controlled shutdown before makeup is depleted.

The following assumptions are made in evaluating the RTN-MAN01 operator action:

- The operator is aware of the need to shut down the plant before CVS water is depleted. Based on engineering judgment, it is assumed that the operators will initiate shutdown about two hours after the CVS has been operating.
- It is assumed that an automatic feature exists in the AP1000 to perform a controlled shutdown, and the operator uses the automatic feature.
- The operator stress level for this event is conservatively assumed to be high.
- Slack time beyond one hour is not credited in the recovery of RTN-MAN01.

Based on these assumptions, the RTN-MAN01 operator action is believed to consists of the following subtasks:

a. Recognize that controlled shutdown must be performed before three hours; this subtask is not modeled, since it is implicit in the error of omission discussed in subtask b.

b. Initiate automatic shutdown by operating one control. Error of omission is possible for this subtask, whereby the operators do absolutely nothing within the critical time period. However, error of commission is believed to be highly unlikely, since an error of commission will be quickly recognized and corrected. Therefore, only error of omission is modeled for this subtask.

The following assumptions are used as input to the quantification of RTN-MAN01:

- Procedure (LONG/SHORT): LONG
- Time window: one hour (to initiate action)
- Estimated actual time: five minutes (to initiate action)
- Cues: low makeup water level
- Stress level: HIGH (multiplier of 5 is applied)
- Recovery by: shift technical advisor and senior reactor operator

RTN-MAN01 is quantified as follows:

Item No.	Subtask Description for RTN-MAN01	Mean HEP	Stress Level	Source: Table 30A-4 (Item)	Recovery Factor	Modified HEP
1	Omit action to initiate controlled plant shutdown	3.8E-03	5	9	4.05E-02	7.70E-04
	Total HEP					7.70E-04

Notes:
1. Recovery is evaluated by "item 40 in HRA data table" x "stress level" x "0.1"; where item 40 represents recovery by STA, and 0.1 is recovery by SRO.
2. "Modified HEP" = "mean HEP" x "stress level" x "recovery factor"

30.6.44 FWN-MAN02 (Start the Startup Feedwater Pumps)

The FWN-MAN02 operator action evaluates the probability of failure to start the startup feedwater pumps, following loss of main feedwater during a transient.

The following assumptions are used as input to the quantification of FWN-MAN02:

- Procedure (LONG/SHORT): LONG
- Time window: 30 minutes
- Estimated actual time: approximately 10 minutes
- Cues: cues are addressed in HPM-MAN01
- Stress level: MODERATE (multiplier of 2 is applied)
- Recovery by: shift technical advisor and senior reactor operator

FWN-MAN02 is quantified as follows:

Item No.	Subtask Description for FWN-MAN02	Mean HEP	Stress Level	Source: Table 30A-4 (Item)	Recovery Factor	Modified HEP
1	Select wrong control for SFW pumps (It is assumed that controls are located together and are operated at the same time by one operator; therefore, this is treated as one action)	1.3E-03	2	29	1.62E-02	4.21E-05
2	Omit step to start pumps	3.8E-03	2	9	1.62E-02	1.23E-04
	Total HEP = Item 1 + Item 2					1.65E-04

Notes:
1. Recovery is evaluated by "item 40 in HRA data table" x "stress level" x "0.1"; where item 40 represents recovery by STA equated to 8.1E-02, and 0.1 is recovery by SRO.
2. "Modified HEP" = "mean HEP" x "stress level" x "recovery factor"

30.6.45 FWN-MAN03 (Start the Startup Feedwater Pumps)

The FWN-MAN03 operator action evaluates the probability of failure to start the startup feedwater (SFW) pumps, following loss of main feedwater during a loss of offsite power.

The following assumptions are used as input to the quantification of FWN-MAN03:

- Procedure (LONG/SHORT): LONG
- Time window: 30 minutes
- Estimated actual time: approximately 10 minutes
- Cues: cues are addressed in HPM-MAN01
- Stress level: HIGH (multiplier of 5 is applied)
- Recovery by: shift technical advisor and senior reactor operator

FWN-MAN03 is quantified as follows:

Item No.	Subtask Description for FWN-MAN03	Mean HEP	Stress Level	Source: Table 30A-4 (Item)	Recovery Factor	Modified HEP
1	Select wrong control for SFW pumps (it is assumed that controls are located together and are operated at the same time by one operators; therefore, this is treated as one action)	1.3E-03	5	29	4.05E-02	2.63E-04

Item No.	Subtask Description for FWN-MAN03	Mean HEP	Stress Level	Source: Table 30A-4 (Item)	Recovery Factor	Modified HEP
2	Omit step to start pumps	3.8E-03	5	9	4.05E-02	7.70E-04
	Total HEP = Item 1 + Item 2					1.03E-03

Notes:
1. Recovery is evaluated by "item 40 in HRA data table" x "stress level" x "0.1"; where item 40 represents recovery by STA equated to 8.1E-02, and 0.1 is recovery by SRO.
2. "Modified HEP" = "mean HEP" x "stress level" x "recovery factor"

30.6.46 REG-MAN00 (Regulate Startup Feedwater)

The REG-MAN00 operator action evaluates the probability of failure to regulate the startup feedwater pumps, following full opening of the regulating valves after loss of compressed air.

The following assumptions are used as input to the quantification of REG-MAN00:

- Procedure (LONG/SHORT): SHORT
- Time window: 50 minutes
- Estimated actual time: approximately 30 minutes
- Cues: it is assumed that response to seven alarms is required, based on loss of air
- Stress level: HIGH (multiplier of 5 is applied)
- Recovery by: senior reactor operator; this recovery is applied only to the initial control room detection steps. No recovery is applied to the steps performed locally.

REG-MAN00 is quantified as follows:

Item No.	Subtask Description for REG-MAN00	Mean HEP	Stress Level	Source: Table 30A-4 (Item)	Recovery Factor	Modified HEP
1	Failure to respond to one of seven alarms	1.3E-01	5	52	1.00E-01	6.50E-02
2	Misread display for loss of compressed air	3.7E-03	5	17	1.00E-01	1.80E-03
3	Omit step to verify loss of compressed air	1.3E-03	5	8	1.00E-01	6.50E-04
4	Select wrong local control for one of two valves	3.7E-03 x 2 = 7.4E-03	5	27	N/A	3.70E-02

Item No.	Subtask Description for REG-MAN00	Mean HEP	Stress Level	Source: Table 30A-4 (Item)	Recovery Factor	Modified HEP
5	Miscommunication between control room and auxiliary operator; incorrect flow result in SFW pump trip	1.0E-01	N/A	60	N/A	1.00E-01
	Total HEP = Item 1 + Item 2 + Item 3 + Item 4 + Item 5					2.04E-01

Notes:
1. Recovery is evaluated by "0.1" for SRO.
2. "Modified HEP" = "mean HEP" x "stress level" x "recovery factor"

30.6.47 CIA-MAN01 (Isolate Failed Steam Generator)

The CIA-MAN01 operator action evaluates the probability of failure to recognize the need and failure to isolate the failed steam generator following a steam line break.

The following assumptions are used as input to the quantification of CIA-MAN01:

- Procedure (LONG/SHORT): LONG
- Time window: 10 minutes
- Estimated actual time: approximately eight minutes
- Cues: primary – low steam generator pressure; high steam flow
  (It is assumed that response to two alarms is required.)
- Stress level: HIGH (multiplier of 5 is applied)
- Recovery by: senior reactor operator

CIA-MAN01 is quantified as follows:

Item No.	Subtask Description for CIA-MAN01	Mean HEP	Stress Level	Source: Table 30A-4 (Item)	Recovery Factor	Modified HEP
1	Failure to respond to one of two alarms	1.6E-03	5	47	1.00E-01	8.00E-04
2	Select wrong control for one of two valves	1.3E-03 x 2 = 2.6E-03	5	29	1.00E-01	1.30E-03
3	Omit step to close one of two valves	3.8E-03 x 2 = 7.6E-03	5	9	1.00E-01	3.80E-03
	Total HEP = Item 1 + Item 2 + Item 3					5.90E-03

Notes:
1. Recovery is evaluated by "0.1" for SRO.
2. "Modified HEP" = "mean HEP" x "stress level" x "recovery factor"

30.6.48 CIB-MAN01 (Close Main Steam Isolation Valve)

The CIB-MAN01 operator action evaluates the probability of failure to isolate the faulted steam generator following a steam generator tube rupture event.

The following assumptions are used as input to the quantification of CIB-MAN01:

- Procedure (LONG/SHORT): LONG
- Time window: 30 minutes
- Estimated actual time: approximately 15 minutes
- Cues: cues are addressed in CIB-MAN00
- Stress level: HIGH (multiplier of 5 is applied)
- Recovery by: shift technical advisor and senior reactor operator

CIB-MAN01 is quantified as follows:

Item No.	Subtask Description for CIB-MAN01	Mean HEP	Stress Level	Source: Table 30A-4 (Item)	Recovery Factor	Modified HEP
1	Select wrong control for MSIV	1.3E-03	5	29	4.05E-02	2.63E-04
2	Omit step to close MSIV	3.8E-03	5	9	4.05E-02	7.70E-04
3	Select wrong control for two of two valves on blowdown line (mod. dependency)	1.3E-03 x 0.15 = 1.95E-04	5	29	4.05E-02	3.95E-05
4	Omit step to close two of two blowdown valves (mod. dependency)	3.8E-03 x 0.15 = 5.70E-04	5	9	4.05E-02	1.15E-04
5	Select wrong control for two of two valves on main/startup feedwater line (mod. dep.)	1.3E-03 x 0.15 = 1.95E-04	5	29	4.05E-02	3.95E-05
6	Omit step to close two of two MFW/SFW valves (mod. dependency)	3.8E-03 x 0.15 = 5.70E-04	5	9	4.05E-02	1.15E-04
	Total HEP = Item 1 + Item 2 + Item 3 + Item 4 + Item 5 + Item 6					1.34E-03

Notes:
1. Recovery is evaluated by "item 40 in HRA data table" x "stress level" x "0.1"; where item 40 represents recovery by STA equated to 8.1E-02, and 0.1 is recovery by SRO.
2. "Modified HEP" = "mean HEP" x "stress level" x "recovery factor."

30.6.49 SGA-MAN01 (Inadvertent Opening of Steam Generator Power-Operated Relief Valve)

The SGA-MAN01 operator action evaluates the probability of failure to inadvertently open a steam generator power-operated relief valve (PORV), with failure to recognize the error and reclose the valve.

The following assumptions are used as input to the quantification of SGA-MAN01:

- Procedure (LONG/SHORT): N/A
- Time window: 10 minutes from valve is opened
- Estimated actual time: approximately five minutes
- Cues: primary – high steam flow
  (It is assumed that response to one alarm associated with high steam flow is required.)
- Stress level: LOW, during initial commission error (multiplier of 1 is applied)
  MODERATE, during recovery period (multiplier of 2 is applied)
- Recovery by: senior reactor operator

The calculated human error probability for this operator action is 2.35E-06. However, the lower bound human error probability of 1.0E-05, used in the Human Reliability Analysis, is assigned to this operator action.

SGA-MAN01 is quantified as follows:

Item No.	Subtask Description for SGA-MAN01	Mean HEP	Stress Level	Source: Table 30A-4 (Item)	Recovery Factor	Modified HEP
1	Select wrong control and inadvertently open SG PORV	1.3E-03	1	29	N/A	1.30E-03
2	Failure to respond to one alarm	2.7E-04	2	46	1.00E-01	5.40E-05
3	Misread display for high steam flow	3.7E-03	2	17	1.00E-01	7.40E-04
4	Select wrong control to reclose SG PORV	1.3E-03	2	29	1.00E-01	2.60E-04
5	Omit action to reclose SG PORV	3.8E-03	2	9	1.00E-01	7.60E-04
	Total HEP = Item 1 x (Item 2 + Item 3 + Item 4 + Item 5)					2.35E-06

Notes:
1. Recovery for items 2 through 5 is credited for SRO only; 0.1 is recovery by SRO.
2. "Modified HEP" = "mean HEP" x "stress level" x "recovery factor"

30.6.50 SWN-MAN01N (Open Air-Operated Valve on Motor Strainer Line)

The SWN-MAN01N operator action evaluates the probability of failure to recognize the need and failure to open the air-operated valve on the motor strainer line during normal operation.

The following assumptions are used as input to the quantification of SWN-MAN01N:

- Procedure (LONG/SHORT): SHORT
- Time window: 30 minutes
- Estimated actual time: approximately 10 minutes
- Cues: primary – high strainer differential pressure
  (Based on engineering judgment, it is assumed that response to three alarms is required.)
- Stress level: MODERATE (multiplier of 2 is applied)
- Recovery by: shift technical advisor and senior reactor operator

SWN-MAN01N is quantified as follows:

Item No.	Subtask Description for SWN-MAN01N	Mean HEP	Stress Level	Source: Table 30A-4 (Item)	Recovery Factor	Modified HEP
1	Failure to respond to one of three alarms	2.7E-03	2	48	1.62E-02	8.74E-05
2	Select wrong control for AOV	1.3E-03	2	29	1.62E-02	4.21E-05
3	Omit step to open AOV	1.3E-03	2	8	1.62E-02	4.21E-05
	Total HEP = Item 1 + Item 2 + Item 3					1.72E-04

Notes:
1. Recovery is evaluated by "item 40 in HRA data table" x "stress level" x "0.1"; where item 40 represents recovery by STA equated to 8.1E-02, and 0.1 is recovery by SRO.
2. "Modified HEP" = "mean HEP" x "stress level" x "recovery factor"

30.6.51 SWB-MAN02 (Start Standby Service Water Pump)

The SWB-MAN02 operator action evaluates the probability of failure to recognize the need and failure to start the standby service water pump during a loss-of-coolant accident, loss of offsite power, or transient.

The following assumptions are used as input to the quantification of SWB-MAN02:

- Procedure (LONG/SHORT): SHORT
- Time window: 30 minutes
- Estimated actual time: approximately 10 minutes

- Cues: primary – low service water flow
  (Based on engineering judgment, it is assumed that response to three alarms is required.)
- Stress level: HIGH (multiplier of 5 is applied)
- Recovery by: shift technical advisor and senior reactor operator

SWB-MAN02 is quantified as follows:

Item No.	Subtask Description for SWB-MAN02	Mean HEP	Stress Level	Source: Table 30A-4 (Item)	Recovery Factor	Modified HEP
1	Failure to respond to one of three alarms	2.7E-03	5	48	4.05E-02	5.47E-04
2	Misread SW pump status	1.3E-03	5	29	4.05E-02	2.63E-04
3	Omit step to verify SW pump status	1.3E-03	5	8	4.05E-02	2.63E-04
4	Select wrong control for AOV	1.3E-03	5	29	4.05E-02	2.63E-04
5	Omit step to open AOV	1.3E-03	5	8	4.05E-02	2.63E-04
	Total HEP = Item 1 + Item 2 + Item 3 + Item 4 + Item 5					1.60E-03

Notes:
1. Recovery is evaluated by "item 40 in HRA data table" x "stress level" x "0.1"; where item 40 represents recovery by STA equated to 8.1E-02, and 0.1 is recovery by SRO.
2. "Modified HEP" = "mean HEP" x "stress level" x "recovery factor"

30.6.52 SWB-MAN02N (Start Standby Service Water Pump)

The SWB-MAN02N operator action evaluates the probability of failure to recognize the need and failure to start the standby service water pump during normal operation.

The following assumptions are used as input to the quantification of SWB-MAN02N:

- Procedure (LONG/SHORT): SHORT
- Time window: 30 minutes
- Estimated actual time: approximately 10 minutes
- Cues: primary – low service water flow
  (Based on engineering judgment, it is assumed that response to three alarms is required.)
- Stress level: MODERATE (multiplier of 2 is applied)
- Recovery by: shift technical advisor and senior reactor operator

SWB-MAN02N is quantified as follows:

Item No.	Subtask Description for SWB-MAN02N	Mean HEP	Stress Level	Source: Table 30A-4 (Item)	Recovery Factor	Modified HEP
1	Failure to respond to one of three alarms	2.7E-03	2	48	1.62E-02	8.75E-05
2	Misread SW pump status	1.3E-03	2	29	1.62E-02	4.21E-05
3	Omit step to verify SW pump status	1.3E-03	2	8	1.62E-02	4.21E-05
4	Select wrong control for AOV	1.3E-03	2	29	1.62E-02	4.21E-05
5	Omit step to open AOV	1.3E-03	2	8	1.62E-02	4.21E-05
	Total HEP = Item 1 + Item 2 + Item 3 + Item 4 + Item 5					2.56E-04

Notes:
1. Recovery is evaluated by "item 40 in HRA data table" x "stress level" x "0.1"; where item 40 represents recovery by STA equated to 8.1E-02, and 0.1 is recovery by SRO.
2. "Modified HEP" = "mean HEP" x "stress level" x "recovery factor"

30.6.53 TCB-MAN01 (Start Standby Turbine Closed Cooling Water Pump)

The TCB-MAN01 operator action evaluates the probability of failure to recognize the need and failure to start the standby turbine closed cooling water (TCCW) pump during a loss-of-coolant accident, loss of offsite power, or transient.

The following assumptions are used as input to the quantification of TCB-MAN01:

- Procedure (LONG/SHORT): LONG
- Time window: 30 minutes
- Estimated actual time: approximately 10 minutes
- Cues: primary – low turbine closed cooling water flow
  (Based on engineering judgment, it is assumed that response to three alarms is required.)
- Stress level: HIGH (multiplier of 5 is applied)
- Recovery by: shift technical advisor and senior reactor operator

TCB-MAN01 is quantified as follows:

Item No.	Subtask Description for TCB-MAN01	Mean HEP	Stress Level	Source: Table 30A-4 (Item)	Recovery Factor	Modified HEP
1	Failure to respond to one of three alarms	2.7E-03	5	48	4.05E-02	5.47E-04
2	Misread TCCW flow indication	3.7E-03	5	17	4.05E-02	7.49E-04
3	Omit step to verify TCCW flow	3.8E-03	5	9	4.05E-02	7.70E-04
4	Select wrong control to start standby TCCW pump	1.3E-03	5	29	4.05E-02	2.63E-04
5	Omit step to start standby TCCW pump	3.8E-03	5	9	4.05E-02	7.70E-04
	Total HEP = Item 1 + Item 2 + Item 3 + Item 4 + Item 5					3.10E-03

Notes:
1. Recovery is evaluated by "item 40 in HRA data table" x "stress level" x "0.1"; where item 40 represents recovery by STA equated to 8.1E-02, and 0.1 is recovery by SRO.
2. "Modified HEP" = "mean HEP" x "stress level" x "recovery factor"

30.6.54 TCB-MAN02 (Locally Align Standby Turbine Closed Cooling Water Heat Exchanger)

The TCB-MAN02 operator action evaluates the probability of failure to recognize the need and failure to locally align the turbine closed cooling water system heat exchanger if one of the two operating heat exchangers fails, during an accident.

Given that one heat exchanger fails, a window greater than 60 minutes is believed to be available from the time of alarm annunciations to complete the actions. However, for this evaluation, it is conservatively assumed that the operators have 60 minutes to perform the task.

The following assumptions are used as input to the quantification of TCB-MAN02:

- Procedure (LONG/SHORT): SHORT
- Time window: 60 minutes
- Estimated actual time: approximately 30 minutes
- Cues: primary – heat exchanger differential flow out of range; heat exchanger differential temperature out of range
  (It is assumed that response to two alarms is required.)
- Stress level: HIGH (multiplier of 5 is applied)
- Recovery by: shift technical advisor and senior reactor operator for recovery of control room detection; auxiliary operator for recovery of local action

TCB-MAN02 is quantified as follows:

Item No.	Subtask Description for TCB-MAN02	Mean HEP	Stress Level	Source: Table 30A-4 (Item)	Recovery Factor	Modified HEP
1	Failure to respond to one of two alarms	1.6E-03	5	46	4.05E-02	3.24E-04
2	Select wrong local valve to isolate failed HX	3.7E-03	5	27	8.00E-01	1.48E-02
3	Omit action to isolate failed HX	1.3E-03	5	8	8.00E-01	5.20E-03
4	Select wrong local valve to align standby HX	3.7E-03	5	27	8.00E-01	1.48E-02
5	Omit step to align standby HX	1.3E-03	5	8	8.00E-01	5.20E-03
	Total HEP = Item 1 + Item 2 + Item 3 + Item 4 + Item 5					4.03E-02

Notes:
1. Recovery for control room actions is evaluated by "item 40 in HRA data table" x "stress level" x "0.1"; where item 40 represents recovery by STA equated to 8.1E-02, and 0.1 is recovery by SRO.
2. Recovery for local actions is evaluated by "item 38 in HRA data table" x "stress level."
3. "Modified HEP" = "mean HEP" x "stress level" x "recovery factor"

30.6.55 VLN-MAN01 (Actuate Hydrogen Control System)

The VLN-MAN01 operator action evaluates the probability of failure to recognize the need and failure to actuate the hydrogen control system, given core damage following a loss-of-coolant accident.

The following assumptions are used as input to the quantification of VLN-MAN01:

- Procedure (LONG/SHORT): LONG
- Time window: 15 minutes
- Estimated actual time: approximately 10 minutes
- Cues: core-exit temperature > 700°F
- Stress level: HIGH (multiplier of 5 is applied)
- Recovery by: shift technical advisor and senior reactor operator

VLN-MAN01 is quantified as follows:

Item No.	Subtask Description for VLN-MAN01	Mean HEP	Stress Level	Source: Table 30A-4 (Item)	Recovery Factor	Modified HEP
1	Failure to recognize core-exit temperature > 700°F	1.2E-03	5	18	4.05E-02	2.43E-04
2	Select wrong control to actuate hydrogen igniters	1.3E-03	5	29	4.05E-02	2.63E-04
3	Omit step to actuate hydrogen igniters	3.8E-03	5	9	4.05E-02	7.70E-04
	Total HEP = Item 1 + Item 2 + Item 3					1.28E-03

Notes:
1. Recovery is evaluated by ("item 40 in HRA data table" x "stress level" x "0.1"); where item 40 represents recovery by STA, and 0.1 is recovery by SRO.
2. "Modified HEP" = "mean HEP" x "stress level" x "recovery factor"

30.6.56 VWN-MAN01 (Align Standby Chiller)

The VWN-MAN01 operator action evaluates the probability of failure to recognize the need and failure to align the standby chiller during a loss-of-coolant accident.

The following assumptions are used as input to the quantification of VWN-MAN01:

- Procedure (LONG/SHORT): LONG
- Time window: 60 minutes
- Estimated actual time: approximately 30 minutes
- Cues: primary – high chilled water temperature; chemical and volume control system pump tripped
  (Based on engineering judgment, it is assumed that response to three alarms is required.)
- Stress level: HIGH (multiplier of 5 is applied)
- Recovery by: shift technical advisor and senior reactor operator

VWN-MAN01 is quantified as follows:

Item No.	Subtask Description for VWN-MAN01	Mean HEP	Stress Level	Source: Table 30A-4 (Item)	Recovery Factor	Modified HEP
1	Failure to respond to one of three alarms	2.7E-03	5	48	4.05E-02	5.47E-04
2	Misread CVCS flow indication	3.7E-03	5	17	4.05E-02	7.49E-04

Item No.	Subtask Description for VWN-MAN01	Mean HEP	Stress Level	Source: Table 30A-4 (Item)	Recovery Factor	Modified HEP
3	Omit step to verify CVCS flow	3.8E-03	5	9	4.05E-02	7.70E-04
4	Select wrong control to start chiller	1.3E-03	5	29	4.05E-02	2.63E-04
5	Omit step to start standby chiller	3.8E-03	5	9	4.05E-02	7.70E-04
6	Select wrong control open standby chiller outlet valve	1.3E-03	5	29	4.05E-02	2.63E-04
7	Omit step to open standby chiller outlet valve	3.8E-03	5	9	4.05E-02	7.70E-04
8	Select wrong control to close failed chiller outlet valve	1.3E-03	5	29	4.05E-02	2.63E-04
9	Omit step to close failed chiller outlet valve	3.8E-03	5	9	4.05E-02	7.70E-04
	Total HEP = Item 1 + Item 2 + Item 3 + Item 4 + Item 5 + Item 6 + Item 7 + Item 8 + Item 9					5.16E-03

Notes:
1. Recovery is evaluated by "item 40 in HRA data table" x "stress level" x "0.1"; where item 40 represents recovery by STA equated to 8.1E-02, and 0.1 is recovery by SRO.
2. "Modified HEP" = "mean HEP" x "stress level" x "recovery factor"

30.6.57 ATW-MAN11 (Recognize the Need for Manual Boration)

The ATW-MAN11 operator action evaluates the probability of failure to recognize the need for manual boration.

ATW-MAN11 is calculated as follows:

- Use the basic diagnosis human error probability of 2.65E-02 evaluated for event ATW-MAN01
- Apply the slack time recovery factor of 4.05E-02 evaluated for CVN-MAN02 based on the 30 minutes slack time

Therefore, the independent HEP for ATW-MAN11 is: Item (a) x Item (b) = 2.65E-02 x 4.05E-02 = 1.06E-03.

30.6.58 REC-MANDAS (Diagnosis of an Event Through DAS Signals or Perform an Activity by Operating DAS Controls)

The REC-MANDAS operator action evaluates the probability of failure to detect the need to perform an activity by using the cues provided by diverse actuation system, or the probability to perform an activity by using the controls that are DAS related.

No detailed evaluation was conducted to deduce the HEPs for the DAS related activities. It is assumed that the independent HEPs for the PMS related activities in the various systems are similar to HEPs for the DAS related tasks.

The formulation of REC-MANDAS is as follows:

Table 30-2 summarizes the basis for REC-MANDAS, and identifies the systems in which the action is applied. For each system in which manual DAS activities are modeled, two actions are identified: SYS-MANDAS and SYS-RECDAS. SYS-MANDAS represents the activity if the manual DAS action is modeled as an independent failure. SYS-RECDAS represents the activity if the manual DAS action is modeled as a dependent failure.

The DAS HEPs are based on the existing human error probabilities that exist for PMS actuation of the respective systems.

The use of a different identification for actuating each system could result in cutsets with the product of several of these independent and/or dependent HEPs for situations where multiple systems have failed. The value reflected in such cutsets would be greatly underestimated.

Therefore, the "manual actuation of DAS" in the various system fault trees would be represented by the same identification REC-MANDAS.

The highest independent HEP of 1.16E-02 is chosen to represent REC-MANDAS; this is viewed as a conservative HEP for DAS actuation of all systems.

Where REC-MANDAS should be assigned a dependent HEP, the highest dependent HEP of 5.06E-01 is applied.

30.6.59 RHN-MAN04 (Isolate the RNS During Shutdown Conditions)

The RHN-MAN04 operator action evaluates the probability of failure to recognize the need and failure to isolate the normal residual heat removal system, given rupture of the normal residual heat removal system piping during hot/cold shutdown conditions.

For this scenario, the control room operators are required to detect the occurrence of normal residual heat removal system pipe rupture and isolate the normal residual heat removal system to allow the passive residual heat removal system to be placed in service.

The configuration of the normal residual heat removal system valve is such that the operators can isolate the normal residual heat removal system by closing only RNS-V022 or by closing combinations of (RNS-V001A and -V002A) or (RNS-V001B and -V002B). This model

considers closure of RNS-V022 only; modeling the other valves is considered to be a recovery option in case the operator has not successfully closed RNS-V022. In that regard, this evaluation is believed to be conservative.

The following assumptions are used as input to the quantification of RHN-MAN04:

- Procedure (LONG/SHORT): SHORT
- Time window: 10 minutes
- Estimated actual time: approximately six minutes
- Cues: primary – decreasing RCS coolant, low PZR level, low hot leg level, low RNS flow, high RNS sump water level secondary: low RCS pressure (if RCP high core-exit temperature, high radiation level in sump building, containment temperature/pressure/radiation not increasing
  (It is assumed that response to at least five alarms is required; only the primary cues listed above are considered)
- Stress level: HIGH (multiplier of 5 is applied)
- Recovery by: no recovery applied to this task

RHN-MAN04 is quantified as follows:

Item No.	Subtask Description for RHN-MAN04	Mean HEP	Stress Level	Source: Table 30A-4 (Item)	Recovery Factor	Modified HEP
1	Failure to respond to one of five alarms	8.0E-03	5	50	N/A	4.00E-02
2	Select wrong control for RNS-V022	1.3E-03	5	29	N/A	6.50E-03
3	Omit action to close RNS-V022	1.3E-03	5	8	N/A	6.50E-03
	Total HEP = Item 1 + Item 2 + Item 3					5.30E-02

Note:
1. "Modified HEP" = "mean HEP" x "stress level"

30.6.60 RHN-MAN05 (Initiate Gravity Injection from IRWST via RNS Suction Line)

The RHN-MAN05 operator action evaluates the probability of failure to recognize the need and failure to initiate alternate gravity injection via the normal residual heat removal system hot-leg connection by using the normal residual heat removal system line from the IRWST to the normal residual heat removal system pumps suction header. Automatic gravity injection occurs at approximately 22 minutes after the loss of RNS cooling, after RCS boiling has occurred and hot-leg level has decreased to the automatic IRWST gravity injection actuation setpoint.

For this scenario, the control room operators are required to detect that gravity injection through the IRWST injection lines has failed due to failure of the squib valves on the injection lines. The time window used for operator action IWN-MAN00 is also applicable to operator action RHN-MAN05; this time window is assumed to be approximately 18 minutes.

The following assumptions are used as input to the quantification of RHN-MAN05:

- Procedure (LONG/SHORT): SHORT
- Time window: 18 minutes
- Estimated actual time: approximately 5 minutes
- Cues: primary – automatic gravity injection actuation alarm, check valves in injection lines remain closed, hot-leg level instruments do not show increase in reactor coolant system level
  (It is assumed that response to one alarm related to automatic gravity injection actuation is required)
- Stress level: HIGH (multiplier of 5 is applied)
- Recovery by: shift technical advisor and senior reactor operator

RHN-MAN05 is quantified as follows:

Item No.	Subtask Description for RHN-MAN05	Mean HEP	Stress Level	Source: Table 30-4 (Item)	Recovery Factor	Modified HEP
1	Failure to respond to one of one alarm for automatic gravity injection actuation	2.7E-04	5	50	4.05E-02	5.47E-05
2	Omit action to check status of check valves	1.3E-03	5	8	4.05E-02	2.63E-04
3	Misread status of check valves	1.2E-03	5	22	4.05E-02	2.43E-04
4	Omit action to check RCS level	1.3E-03	5	8	4.05E-02	2.63E-04
5	Misread RCS level	1.2E-03	5	17	4.05E-02	2.43E-04
6	Omit action to open MOV RNS-V023	1.3E-03	5	8	4.05E-02	2.63E-04
7	Select wrong control for MOV RNS-V023	1.3E-03	5	29	4.05E-02	2.63E-04
	Total HEP = Item 1 + Item 2 + Item 3 + Item 4 + Item 5 + Item 6 + Item 7					1.60E-03

Notes:
1. Recovery for control room actions is evaluated by: "item 40 in HRA data table" x "stress level" x "0.1"; where item 40 represents recovery by STA; and 0.1 is recovery by SRO.
2. "Modified HEP" = "mean HEP" x "stress level" x "recovery factor"

30.6.61 RHN-MAN06 (Recognize the Need and Throttle RNS Valve V011)

The RHN-MAN06 operator action evaluates the probability of failure to recognize the need and failure to throttle normal residual heat removal system pump discharge valve V011 during sump recirculation, given failure of one recirculation path in train B.

The following assumptions are used as input to the quantification of RHN-MAN06:

- Procedure (LONG/SHORT): SHORT
- Time window: 40 minutes (assuming 30 minutes for diagnosis and 10 minutes for action)
- Estimated actual time: less than 20 minutes to recognize the failure and throttle the valve
- Cues: primary – valve status (closed position) in the failed recirculation path
- Stress level: HIGH (multiplier of 5 is applied)
- Recovery by: shift technical advisor and senior reactor operator

RHN-MAN06 is quantified as follows:

Item No.	Subtask Description for RHN-MAN06	Mean HEP	Stress Level	Source: Table 30A-4 (Item)	Recovery Factor	Modified HEP
1	Failure to recognize failure of one recirculation path in train B within 30 minutes	2.7E-03	N/A	THERP Table 20-3 (4)	N/A	2.70E-03
2	Misread recirculation valves status (total dependency assumed in viewing the valve positions)	1.3E-03	5	29	4.05E-02	2.63E-04
3	Omit step to verify recirculation valves status	1.3E-03	5	8	4.05E-02	2.63E-04
4	Select wrong control for RNS valve V011	1.3E-03	5	29	4.05E-02	2.63E-04
5	Omit step to throttle valve V011	1.3E-03	5	8	4.05E-02	2.63E-04
	Total HEP = Item 1 + Item 2 + Item 3 + Item 4 + Item 5					3.75E-03

Notes:
1. Recovery is evaluated by: "item 40 in HRA data table" x "stress level" x "0.1"; where item 40 represents recovery by STA; and 0.1 is recovery by SRO.
2. "Modified HEP" = "mean HEP" x "stress level" x "recovery factor"

30.6.62 RCS-MANODS1 (Close AOVs CVS-V045 or -V047, Given Failure of HL Level Instruments)

The RCS-MANODS1 operator action evaluates the probability of failure to observe failure of the hot leg level instruments and failure to close the air-operated valves CVS-V045 and

CVS-V047 to preclude initial overdraining of the reactor coolant system, during draining of the system to mid-loop.

For this scenario, the operators initially monitor the coolant level using the pressurizer wide-range level instrumentation which is assumed to be reading accurately. Subsequently, the hot leg (HL) instruments are designed to pick up the reactor coolant system level with readings that are consistent with the pressurizer wide-range level reading. The operator is required to observe such inconsistency among the readings from the reactor coolant system level instruments and close the air-operated valves CVS-V045 or CVS-V047 to prevent overdraining of the reactor coolant system.

The following assumptions are used as input to the quantification of RCS-MANODS1:

- Procedure (LONG/SHORT): SHORT
- Time window: > 3 hours
- Estimated actual time: ~ five minutes
- Cues: inconsistency among RCS level readings from pressurizer wide-range level instrument and hot leg level instruments
- Stress level: HIGH (multiplier of 5 is applied)
- Recovery by: shift technical advisor and senior reactor operator

RCS-MANODS1 is quantified as follows:

Item No.	Subtask Description for RCS-MANODS1	Mean HEP	Stress Level	Source: Table 30A-4 (Item)	Recovery Factor	Modified HEP
1	Failure to detect inconsistency between level instruments	1.2E-03	5	18	2.19E-02	1.31E-04
2	Select wrong controls for CVS-V045 & -47; (total dependency is assumed)	1.2E-03	5	28	2.19E-02	1.31E-04
3	Omit action to close VS-V045 & -47; (total dependency is assumed)	1.3E-03	5	8	2.19E-02	1.42E-04
	Total HEP = Item 1 + Item 2 + Item 3					4.04E-04

Notes:

1. Recovery for control room actions is evaluated by: "item 40 in HRA data table" x "stress level" x "0.1" x "0.54"; where item 40 represents recovery by STA; 0.1 is recovery by SRO; and 0.54 is credit for slack time beyond one hour.
2. "Modified HEP" = "mean HEP" x "stress level" x "recovery factor"

30.6.63 RCS-MANODS2 (Close AOVs CVS-V045 or -V047, Given Failure of Valves to Close Automatically)

The RCS-MANODS2 operator action evaluates the probability of failure to detect failure of automatic closure of air-operated valves CVS-V045 and V047, and failure to manually close the valves, when low hot leg level is reached during draining of the system to mid-loop.

For this scenario, the operator initiates draining through the chemical and volume control system and stops monitoring the reactor coolant system level. The reactor coolant system drains down to low hot leg level. Air-operated valves CVS-V045 and -V047 are required to close automatically upon receipt of low hot leg level signals. If automatic closure of the valves occurs, the operators are required to close them.

The following assumptions are used as input to the quantification of RCS-MANODS2:

- Procedure (LONG/SHORT): SHORT
- Time window: 5 minutes
- Estimated actual time: 1 minute
- Cues: low hot leg level alarm; air-operated valves in open position (it is assumed that when the alarm is annunciated the operator is required to manipulate the controls for closing the valves even though automatic closure may have been successful)
- Stress level: HIGH (multiplier of 5 is applied)
- Recovery by: no recovery applied to this task

RCS-MANODS2 is quantified as follows:

Item No.	Subtask Description for RCS-MANODS2	Mean HEP	Stress Level	Source: Table 30A-4 (Item)	Recovery Factor	Modified HEP
1	Failure to respond to one alarm	2.7E-04	5	46	N/A	1.35E-03
2	Select wrong controls for CVS-V045 & -47; (total dependency is assumed)	1.2E-03	5	28	N/A	6.00E-03
3	Omit action to close VS-V045 & -47; (total dependency is assumed)	1.3E-03	5	8	N/A	6.50E-03
	Total HEP = Item 1 + Item 2 + Item 3					1.39E-02

Note:
1. "Modified HEP" = "mean HEP" x "stress level"

30.6.64 SWN-MAN03 (Recognize the Need and Locally Refill Service Water Basin)

The SWN-MAN03 operator action evaluates the probability of failure to recognize the need and failure to refill the service water basin during a loss-of-offsite power event with subsequent loss of automatic refill capability through the raw water system.

For this event, it is assumed that the crew is aware that water in the service water basin will run out; the basin capacity is expected to last for 12 hours. Therefore, the operators are expected to have someone in place locally to perform the task when the low service water basin level is reached. It is further assumed that there is a time window of about 30 minutes, from the time the low level alarm is annunciated, to complete the actions.

The following assumptions are used as input to the quantification of SWN-MAN03:

- Procedure (LONG/SHORT): SHORT
- Time window: 30 minutes
- Estimated actual time: approximately five minutes
- Cues: primary – low SW basin water level
  (It is assumed that response to one alarm is required)
- Stress level: HIGH (multiplier of 5 is applied)
- Recovery by: shift technical advisor and senior reactor operator for recovery of control room detection; auxiliary operator for recovery of local action

SWN-MAN03 is quantified as follows:

Item No.	Subtask Description for SWN-MAN03	Mean HEP	Stress Level	Source: Table 30A-4 (Item)	Recovery Factor	Modified HEP
1	Failure to respond to one of one alarm	2.7E-04	5	46	4.05E-02	5.47E-05
2	Select 1 of 2 local valves (V019 A or B)	3.7E-03 x 2 = 7.4E-03	5	27	8.00E-01	2.96E-02
3	Omit action to open 1 of 2 local valves (V019 A or B)	1.3E-03 x 2 = 2.6E-03	5	8	8.00E-01	1.04E-02
	Total HEP = Item 1 + Item 2 + Item 3					4.00E-02

Notes:
1. Recovery for control room actions is evaluated by: "item 40 in HRA data table" x "stress level" x "0.1"; where item 40 represents recovery by STA; and 0.1 is recovery by SRO.
2. Recovery for local actions is evaluated by: "item 38 in HRA data table" x "stress level"
3. "Modified HEP" = "mean HEP" x "stress level" x "recovery factor"

30.7 Conditional Probability Evaluation

This section of the Human Reliability Analysis describes the method used for determining the dependencies among operator actions in a given accident sequence.

30.7.1 Application

When a given accident sequence in an event includes more than one operator action, the dependency of each operator action upon the previous operator actions should be considered.

Since the same crew of operators is likely to respond to all events that take place in a sequence, it is reasonable to think of the crew as a possible source of common cause failure. For operator actions, coupling mechanisms that could cause the failure of an operator action to be more likely need to be identified, given that some preceding operator action has failed. Some of the factors that can be considered to couple or decouple operator actions include: (1) the level of stress applicable to the operator action, (2) the timing mechanism of the operator actions, (3) the complexity of the operator actions, and (4) the quality of the procedural guidance available to the operators.

The decision tree presented in the Table 30-4 is utilized in determining the appropriate dependency level to assign a given operator action in the AP1000 Human Reliability Analysis. The use of the decision tree to evaluate the level of dependence between successive operator actions is a logical technique. The questions asked in the decision tree are designed to determine the level of dependence between the operator actions.

30.7.2 Process Used to Determine Dependencies

Each of the event trees for the AP1000 PRA, documented in Reference 30-3, was reviewed to determine possible dependencies between operator actions. Whenever an operator action was addressed, all previous nodes addressed on the sequence were reviewed. If any previous operator action in the sequence failed, then the subsequent operator actions are considered as candidates for dependency evaluation.

The decision tree in Table 30-4 consists of three charts. The answers to questions in this table are determined by the human reliability analysis analyst in collaboration with the cognizant system analysts and event tree analyst.

The starting point in Table 30-4 is to determine the stress level of the first (or preceding) task. If low stress level was used for the first task, then sheet 1 of 3 is used; if moderate stress was used for the first task, sheet 2 is used; and if high stress was used, sheet 3 is used.

The exercise continues with the aim of determining factors specific to the second task such as time window, slack time, complexity of the tasks, and the type of procedural guidance. The end result is the deducing of the dependency level for the second task.

Conditional probabilities are then documented in Table 30-4, which summarizes and captures the factors for each task considered in the decision tree.

30.7.3 Calculation of Dependent Human Error Probabilities

Once the dependency levels for each case are determined, the base human error probabilities without dependency were modified to account for the dependency. The five levels of dependency presented in NUREG/CR 1278 are utilized: complete, high, moderate, low, and

zero. Where a zero dependency relationship exists, the unconditional human error probability is used. For events having a complete dependency relationship, both events are combined and treated as one event. This is evident in the treatment of several subtasks. The dependency evaluation therefore focuses on three levels of dependency: high, moderate, and low.

If the event unconditional human error probability is less than or equal to 1.0E-02, then the following conditional human error probability is to be used, according to Table 20-18 of NUREG/CR 1278:

- 0.05 for low dependency
- 0.15 for moderate dependency
- 0.5 for high dependency

If the event unconditional human error probability is greater than 1.0E-2, then the conditional human error probability is calculated by the applicable equation as follows, according to Table 20-17 of NUREG/CR 1278:

- (1 + 19N)/20 for low dependency
- (1 + 6N)/7 for moderate dependency
- (1 + N)/2 for high dependency

where N is the unconditional human error probability of the operator action

These calculations are performed for all dependency cases for AP1000. The results are summarized in Table 30-3 and included in Table 30-1. These conditional human error probabilities are used in the PRA quantification if the operator action is a conditional one.

Definition of terms used in Table 30-3 are as follows:

- Time window – Available time to perform the required tasks before system failure occurs
- Actual time – Estimated time to perform the required tasks
- Slack time – "Time window" minus "Actual time"
- Simple task – Activities consisting of less than 10 steps, not involving any specific or unusual operator interaction or dependency, and during a scenario in which workload is light to moderate
- Complex task – Activities consisting of 10 or more steps, and/or involving more than normal operator dependency, and/or during a scenario in which workload is moderate to high
- Clearly defined – Steps are such that operators do not have to shuffle procedure between procedures, and/or steps are not confusing or ambiguous.

30.8 References

30-1 Swain, A. D. and Guttman H. E., *Handbook of Human Reliability Analysis with Emphasis on Nuclear Power Plants*, NUREG/CR-1278, August 1983.

30-2 "A Revised Systematic Human Action Reliability Procedure (SHARP1)," EPRI-NP-7183-56, December 1990.

Table 30-1 (Sheet 1 of 16)

AP100 HUMAN ERROR PROBABILITY SUMMARY RESULTS

System	Description of Operator Error	Event ID (SIMON LINE #)	Cue(s)	DAS/PLS/PMS Available	PSF	Checking Recovery (by)	Location	Mean HEP Uncond.	Mean HEP Cond.
AC & DC	a Failure to recognize the need and failure to start the standby diesel generator during LOOP	ZON-MAN01 (831)	No voltage alarm, loss of external grid alarm	PLS	Procedure - SHORT Tw = 30 min Ta = 10 min Stress level - HIGH	SRO & STA	Control room	2 67E-03	N/A
ADS	a. Failure to recognize the need for RCS depressurization during a small LOCA or loss of high-pressure heat removal system	LPM-MAN01 (730)	Small LOCAs: low PRZR level, low narrow-range SG level; transient: loss of PRHR function, low SG level and low SFW (two associated alarms are assumed available)	DAS, PLS, PMS	Procedure - LONG Tw = 30 min Ta = 15 min Stress level - HIGH	SRO & STA	Control room	1.34E-03	5 00E-01
	b. Failure to recognize the need for RCS depressurization during a medium LOCA	LPM-MAN02 (731)	Low PRZR level, low PRZR pressure (two associated alarms are assumed available)	DAS, PLS, PMS	Procedure - LONG Tw = 20 min Ta = 15 min Stress level - HIGH	SRO	Control room	3 30E-03	5 00E-01

Notes:

DAS – Diverse actuation system
NRHR – Normal residual heat removal system
PRHR – Passive residual heat removal system
Ta – Actual time
Tw – Time window

Table 30-1 (Sheet 2 of 16)

AP100 HUMAN ERROR PROBABILITY SUMMARY RESULTS

System	Description of Operator Error	Event ID (SIMON LINE #)	Cue(s)	DAS/PLS/PMS Available	PSF	Checking Recovery (by)	Location	Mean HEP Uncond.	Mean HEP Cond.
ADS (cont'd)	c. Failure to recognize the need for RCS depressurization during a shutdown condition with failure of CMT and the NRHR	LPM-MAN05 (786)	Loss of NRHR, low hot leg water level (two associated alarms are assumed available)	PMS	Procedure - LONG Tw = 60 min Ta = 20 min Stress level - HIGH	SRO & STA	Control room	6.83E-04	1.50E-01
	d Failure to recognize the need for RCS depressurization during a small LOCA or transient with the loss of the PRHR and CMT success after core damage	LPM-REC01 (135)	Core-exit T/C > 1200°F, no detailed evaluation performed for this task. (The unconditional HEP for this task is assumed similar to LPM-MAN01 LPM-REC01 is assumed to have a low dependency on LPM-MAN01, that is HEP for LPM-REC01 = [1 + (19 x 1.34E-03)/20] ~ 5 00E-02	PMS	Procedure - LONG Tw = 20 min Ta = 15 min Stress level - HIGH	N/A	Control room	1 34E-03	5 00E-02
	e Failure to actuate the ADS for RCS depressurization as recovery from failure of automatic actuation or for manual ADS actuation	ADN-MAN01 (734)	Cues are addressed in LPM-MAN01 and LPM- MAN02, etc., for respective initiators	DAS, PLS, PMS	Procedure - LONG Tw = 5 min Ta = 3 min Stress level - HIGH	SRO & STA	Control room	3.02E-03	5 00E-01 or 5 00E-02

Table 30-1 (Sheet 3 of 16)

AP100 HUMAN ERROR PROBABILITY SUMMARY RESULTS

System	Description of Operator Error	Event ID (SIMON LINE #)	Cue(s)	DAS/PLS/PMS Available	PSF	Checking Recovery (by)	Location	Mean HEP Uncond.	Mean HEP Cond.
ADS (cont'd)	f. Failure to complete ADS actuation for RCS depressurization as recovery from failure of automatic actuation or for manual ADS actuation after core damage	ADN-REC01 (790)	Cue addressed in LPM-REC01; no detailed evaluation performed for this task. (The unconditional HEP for this task is assumed similar to ADN-MAN01. ADN-REC01 is assumed to have a low dependency on ADN-MAN01, that is HEP for ADN-REC01 = [1 + (19 x 3.02E-03)/20] ~ 5 00E-02)	PMS	Procedure - LONG Tw = 5 min Ta = 3 min Stress level - HIGH	N/A	Control room	3 02E-3	5 00E-02
	g. Failure to depressurize the RCS to refill the pressurizer using the first stage ADS valves, given failure of aux. spray during SGTR	ADF-MAN01 (875)	No detailed evaluation performed for this task; (The unconditional HEP for this task is assumed similar to CVN-MAN00 ADF-MAN01 is assumed to have a high dependency on CVN-MAN00. That is, HEP for ADF-MAN01 = [1 + 3.10E-03)/2] ~ 5 00E-1)	DAS, PLS, PMS	N/A	N/A	Control room	N/A	5 00E-01

Table 30-1 (Sheet 4 of 16)

AP100 HUMAN ERROR PROBABILITY SUMMARY RESULTS

System	Description of Operator Error	Event ID (SIMON LINE #)	Cue(s)	DAS/PLS/PMS Available	PSF	Checking Recovery (by)	Location	Mean HEP Uncond.	Mean HEP Cond.
ADS (cont'd)	h Failure to recognize the need and failure to immediately reclose ADS motor-operated valve (MOV) during testing of the MOV, given that the motor-operated valve in series with the tested MOV failed open and went undetected	ADS-MANTEST (Not in SIMON - this is used in calculating an at-power IE frequency)	High temperature in ADS line; (1 associated alarm is assumed available)	PMS	Procedure - SHORT Tw = 2 min Ta = 2 min Stress level - MODERATE	None	Control room	3 14E-03	N/A
CCWS	a Failure to recognize the need and start the standby component cooling water pump B, during a LOCA, transient, or loss of offsite power event	CCB-MAN01 (738)	Low CCW flow In addition to one alarm associated with CCW failure, two other alarms associated with the initiating event are assumed available.	PLS	Procedure - SHORT Tw = 30 min Ta = 10 min Stress level - HIGH	SRO & STA	Control room	1.07E-03	N/A
	b. Failure to recognize the need and failure to start standby component cooling water pump B during normal operation	CCB-MAN01N (736)	No detailed evaluation performed for this task. The evaluation performed for CCB-MAN01 is applied to this event as a conservative estimate	PLS	N/A	N/A	Control room	1 07E-03	N/A
	c Failure to exclude heat exchanger H001A and align H001B during normal operation	CCN-MAN02 (737)	High temperature on line downstream of HX (one associated alarm is assumed available)	PLS	Procedure - LONG Tw = 60 min Ta = 30 min Stress level - MODERATE	SRO & STA	Control room (& ex-control room)	2 62E-02	N/A

Table 30-1 (Sheet 5 of 16)

AP100 HUMAN ERROR PROBABILITY SUMMARY RESULTS

System	Description of Operator Error	Event ID (SIMON LINE #)	Cue(s)	DAS/PLS/PMS Available	PSF	Checking Recovery (by)	Location	Mean HEP Uncond.	Mean HEP Cond.
CDS	a Failure to diagnose a steam generator tube rupture event	CIB-MAN00 (764)	High radiation level in main steam line, high SG level (two associated alarms are assumed available)	DAS, PLS, PMS	Procedure - LONG Tw = 30 min Ta = 15 min Stress level - HIGH	SRO & STA	Control room	1 84E-03	1.50E-01 or 5 00E-02
	b. Failure to adjust steam dump valves, given a steam generator tube rupture with success in isolating faulted steam generator	DUMP-MAN01 (773)	Cues are addressed in CIB-MAN00	DAS, PLS, PMS	Procedure - LONG Tw = 30 min Ta = 15 min Stress level - HIGH	SRO & STA	Control room	1 32E-03	N/A
CNS	a Failure to recognize the need and failure to isolate the containment, given core damage following a LOCA, LOOP, station blackout, or transient	CIC-MAN01 (753)	High CNMT radiation, high CNMT pressure, high CNMT temperature (three associated alarms are assumed available)	DAS, PMS	Procedure - LONG Tw = 1 hr Ta = 30 min Stress level - HIGH	SRO & STA	Control room	5.71E-03	N/A
	b. Failure to recognize the need and failure to close manual valve CAS-V204 for containment isolation given core damage due to events initiated during shutdown conditions	CAN-MANOS (792)	High containment (CNMT) radiation; high CNMT pressure; high CNMT temperature; (3 associated alarms are assumed available)	DAS, PMS	Procedure - LONG Tw = 1 hr Ta = 40 min Stress level - HIGH	SRO, STA & aux operators	Control room & Ex-control room	3 05E-02	N/A
	c. Failure to recognize the need and failure to isolate the containment for long-term cooling following transient during shutdown	CIT-MANOS (758)	High (CNMT) radiation, high CNMT pressure, high CNMT temperature (three associated alarms are assumed available)	DAS, PMS	Procedure - LONG Tw = 1 hr Ta = 20 min Stress level - HIGH	SRO & STA	Control room	6 48E-03	N/A

Table 30-1 (Sheet 6 of 16)

AP100 HUMAN ERROR PROBABILITY SUMMARY RESULTS

System	Description of Operator Error	Event ID (SIMON LINE #)	Cue(s)	DAS/PLS/PMS Available	PSF	Checking Recovery (by)	Location	Mean HEP Uncond.	Mean HEP Cond.
CMT	a. Failure to actuate the CMT if automatic actuation fails during a LOCA	CMN-MAN01 (733)	Cues are addressed in LPM-MAN01 for a small LOCA, and in LPM-MAN02 for medium LOCA	DAS, PMS	Procedure - LONG (Small LOCA) Tw = 15 min Ta = 15 min	SRO	Control room	5.10E-03	5 00E-01 or 5 00E-02
	b. Failure to manually actuate the CMT after core damage	CMN-REC01 (139)	No detailed evaluation performed for this task. The unconditional HEP for this task is assumed similar to CMN-MAN01. CMN-REC01 is assumed to have a low dependency on CMN-MANO1, that is HEP for CMN-REC01 = [1 + (19 x 5.10E-03) / 20] ~ 5 00E-02	PMS	N/A	N/A	Control room	5.10E-03	5 00E-02
CVCS	a Failure to align the CVS in the auxiliary spray mode following a steam generator tube rupture event	CVN-MAN00 (770)	Cues are addressed in CIB-MAN00	DAS, PLS, PMS	Procedure - LONG Tw = 30 min Ta = 10 min Stress level - HIGH	SRO & STA	Control room	3.10E-03	N/A
	b. Failure to align the CVS in the boration mode following an ATWS	CVN-MAN02 (768)	Cues are addressed in ATW-MAN11	DAS, PLS, PMS	Procedure - SHORT Tw = 60 min Ta = 30 min Stress level - HIGH	SRO & STA	Control room	1.58E-03	1 50E-01

Table 30-1 (Sheet 7 of 16)

AP100 HUMAN ERROR PROBABILITY SUMMARY RESULTS

System	Description of Operator Error	Event ID (SIMON LINE #)	Cue(s)	DAS/PLS/PMS Available	PSF	Checking Recovery (by)	Location	Mean HEP Uncond.	Mean HEP Cond.
CVCS (cont'd)	c. Failure to recognize the need and failure to start the CVS pump B, if pump A fails to start automatically during any accident condition that requires CVS makeup	CVN-MAN03 (729)	Low pressurizer level (one associated alarm is assumed available)	DAS, PLS, PMS	Procedure - SHORT Tw = 30 min Ta = 10 min Stress level - HIGH	SRO & STA	Control room	1 07E-03	1 50E-01
	d. Failure to recognize the need for manual boration	ATW-MAN11 (783)	Same as ATW-MAN01	DAS, PLS, PMS	Procedure - SHORT Tw = 1 hr Ta = 30 min Stress level - HIGH	SRO & STA	Control room	1 06E-03	1.50E-01
	e. Failure to recognize the need and failure to trip the CVS pump and isolate startup feedwater to failed steam generator, given a steam generator tube rupture event	SGHL-MAN01 (776)	Low SG pressure, high steam flow (two associated alarms are assumed available)	PLS, PMS	Procedure - LONG Tw = 30 min Ta = 10 min Stress level - HIGH	SRO & STA	Control room	3.91E-03	1.50E-01
DAS	Failure to diagnose an event through DAS signals or perform an activity by operating DAS controls	REC-MAN DAS (791)	Any system-specific DAS related signals	DAS	It is assumed that the PMS related PSFs for the applicable events are same for DAS	N/A	Control room	1 16E-02	5 06E-01

Table 30-1 (Sheet 8 of 16)

AP100 HUMAN ERROR PROBABILITY SUMMARY RESULTS

System	Description of Operator Error	Event ID (SIMON LINE #)	Cue(s)	DAS/PLS/PMS Available	PSF	Checking Recovery (by)	Location	Mean HEP Uncond.	Mean HEP Cond.
IA	a Failure to recognize the need and failure to actuate the standby compressor, given a LOCA, LOOP, or transient	CAN-MAN01 (760)	Low instrument air header pressure (In addition to one alarm associated with IA failure, two other alarms associated with the initiating event are assumed available)	PLS	Procedure - SHORT Tw = 30 min Ta = 10 min Stress level - HIGH	SRO & STA	Control room	1 07E-03	N/A
IRWST	a. Failure to recognize the need and failure to open the recirculation valves for IRWST low-low level, during a LOCA or transient	REN-MAN02 (735)	Low-low IRWST level (In addition to one alarm associated with IRWST level, four other alarms associated with the initiating event are assumed available)	DAS, PMS	Procedure - LONG Tw > 60 min Ta = 10 min Stress level - HIGH	SRO & STA	Control room	1.99E-03	1.50E-01
	b Failure to recognize the need and failure to open recirculation valves to flood reactor cavity after core damage	REN-MAN03 (769)	High CNMT radiation, high hot leg temperature (two associated alarms are assumed available)	DAS, PMS	Procedure - LONG Tw = 20 min Ta = 10 min Stress level - HIGH	SRO & STA	Control room	3.40E-03	1.50E-01
	c. Failure to recognize the need and failure to open the recirculation valves during a loss-of-coolant accident or transient, if the IRWST low-level signal fails - preventing automatic actuation of sump recirculation	REN-MAN04 (793)	High CNMT sump level, low reactor coolant system pressure; IRWST injection check valves position, (1 CNMT sump level alarm is assumed available for this scenario)	DAS, PMS	Procedure - LONG Tw = 60 min Ta > 1 min Stress level - HIGH	SRO & STA	Control room	1 00E-02	1.50E-01 or 5 00E-02

Table 30-1 (Sheet 9 of 16)

AP100 HUMAN ERROR PROBABILITY SUMMARY RESULTS

System	Description of Operator Error	Event ID (SIMON LINE #)	Cue(s)	DAS/PLS/PMS Available	PSF	Checking Recovery (by)	Location	Mean HEP Uncond.	Mean HEP Cond.
IRWST (cont'd)	d. Failure to recognize the need and failure to manually open IRWST squib valves during shutdown conditions with the NRHR unavailable	IWN-MAN00 (782)	Low hot leg water level (one group of alarms indicating failure of the NRHR system)	PMS	Procedure - LONG Tw > 60 min Ta = 10 min Stress level - HIGH	SRO & STA	Control room	1.15E-03	1.50E-01
NRHR	a. Failure to recognize the need and failure to align the NRHR system after ADS actuation, during a LOCA, LOOP, or transient in the reactor coolant system cooling mode	RHN-MAN01 (739)	Decreasing RCS pressure, CNMT actuation, ADS valves open (three associated alarms are assumed available)	DAS, PMS	Procedure - LONG Tw = 20 min Ta = 15 min Stress level - HIGH	SRO & STA	Control room	2 90E-03	5 00E-01
	b Failure to align the NRHR system to provide a diversion path to the IRWST during cold shutdown and terminate event by reclosing the valve	RHN-MANDIV (Not in SIMON - this is used in calculating a shutdown IE frequency)	One alarm due to the initial commission error is assumed available	DAS, PMS	Procedure - LONG Tw = 30 min Ta = 10 min Stress level - MODERATE (for initial commission) - HIGH (for subsequent actions)	SRO & STA	Control room	1 00E-05	N/A

Table 30-1 (Sheet 10 of 16)

AP100 HUMAN ERROR PROBABILITY SUMMARY RESULTS

System	Description of Operator Error	Event ID (SIMON LINE #)	Cue(s)	DAS/PLS/PMS Available	PSF	Checking Recovery (by)	Location	Mean HEP Uncond.	Mean HEP Cond.
NRHR (cont'd)	c. Failure to recognize the need and failure to manually transfer NRHR pumps to diesel generator, or failure to restart the NRHR system pumps following grid recovery in two hours after a LOOP, and failure of both automatic and manual transfer onto a diesel generator during shutdown	RHN-MAN02/ RHN-MAN03 (789)	Loss of external grid; or voltage return, no flow from NRHR system, low hot leg water temperature (five associated alarms are assumed available)	PMS, PLS	Procedure - LONG Tw = 1 hr Ta = 10 min Stress level - HIGH (Tw = 30 min for drained condition)	SRO & STA	Control room	4.17E-03	1 50E-01
	d. Failure to recognize the need and failure to isolate the normal residual heat removal system, given rupture of the RNS piping when the plant is at hot/cold conditions	RHN-MAN04 (Not in SIMON - this is used in event tree LOCA-PR-ND)	Decreasing RCS coolant, low PZR level, low hot leg level, low RNS flow, high RNS sump water level, (5 associated alarms are assumed available)	DAS, PLS, PMS	Procedure - SHORT Tw = 10 min Ta = 6 min Stress level - HIGH	N/A	Control room	5 30E-02	N/A
	e. Failure to recognize the need and failure to initiate gravity injection via RNS hot leg connection	RHN-MAN05 (787)	High core-exit temperature, close check valves on GI lines, RCS level not increasing	PMS	Procedure - SHORT Tw = > 60 min Ta = 10 min Stress level - HIGH	SRO & STA	Control room	1 60E-03	1.50E-01
	f. Failure to recognize the need and failure to throttle RNS pump discharge valve V011 during sump recirculation, given failure of one recirculation path in train B	RHN-MAN06 (797)	Valve position indication - closed	DAS, PMS	Procedure - SHORT Tw = 40 min Ta = 20 min Stress level - HIGH	SRO & STA	Control room	3.75E-03	1.50E-01 or 5 00E-02

Table 30-1 (Sheet 11 of 16)

AP100 HUMAN ERROR PROBABILITY SUMMARY RESULTS

System	Description of Operator Error	Event ID (SIMON LINE #)	Cue(s)	DAS/PLS/PMS Available	PSF	Checking Recovery (by)	Location	Mean HEP Uncond.	Mean HEP Cond.
PCS	a. Failure to recognize the need and failure to actuate passive containment cooling air-operated valves, given a transient or LOOP	PCN-MAN01 (747)	High CNMT pressure (In addition to one alarm associated with high CNMT pressure, two other alarms associated with the initiating event are assumed available)	DAS, PMS	Procedure - LONG Tw = 5 hr Ta = 2 hr Stress level - HIGH	SRO & STA	Control room	1 48E-04	N/A
PRHR	a. Failure to recognize the need for high-pressure decay heat removal following a loss of main feedwater during an accident	HPM-MAN01 (732)	Low SG level, high hot leg temperature (five alarms are assumed available for this scenario)	DAS, PLS, PMS	Procedure - LONG Tw = 30 min Ta = 10 min Stress level - MODERATE	SRO & STA	Control room	5 02E-04	5 00E-1
	b. Failure to align the PRHR system given a loss of main feedwater during a transient	PRN-MAN01 (749)	Cues are addressed in HPM-MAN01	DAS, PLS, PMS	Procedure - LONG Tw = 30 min Ta = 15 min Stress level - MODERATE	SRO & STA	Control room	4 08E-04	5.00E-02
	c. Failure to align the PRHR system, given a loss of main feedwater during a LOCA or LOOP	PRN-MAN02 (750)	Cues are addressed in HPM-MAN01	DAS, PLS, PMS	Procedure - LONG Tw = 30 min Ta = 15 min Stress level - HIGH	SRO & STA	Control room	2.55E-03	5 00E-01 or 5 00E-02
	d Failure to control the PRHR system operation following a main steam line break or main steam line valve stuck-open event	PRN-MAN03 (778)	High neutron flux (five alarms are assumed available for this scenario)	PMS	Procedure - LONG Tw > 2 hr Ta = 30 min Stress level - HIGH	SRO & STA	Control room	8.76E-04	5 00E-01 or 5.00E-2

Table 30-1 (Sheet 12 of 16)

AP100 HUMAN ERROR PROBABILITY SUMMARY RESULTS

System	Description of Operator Error	Event ID (SIMON LINE #)	Cue(s)	DAS/PLS/PMS Available	PSF	Checking Recovery (by)	Location	Mean HEP Uncond.	Mean HEP Cond.
PRHR (cont'd)	e. Failure to recognize the need and failure to isolate a failed heat exchanger following PRHR tube rupture before ADS actuation	PRI-MAN01 (751)	High hot leg temperature, low PRZR pressure, low PRZR level (three associated alarms are assumed available)	DAS, PLS, PMS	Procedure - LONG Tw = 35 min Ta = 10 min Stress level - MODERATE	SRO & STA	Control room	4 96E-04	N/A
RCS	a Failure to trip the four reactor coolant pumps if automatic trip fails during a LOCA	RCN-MAN01 (746)	Cues are addressed in LPM-MAN01	DAS, PLS, PMS	Procedure - LONG Tw = 20 min Ta = 15 min Stress level - HIGH	SRO & STA	Control room	4.13E-03	5.00E-01
	b. Failure to observe failure of the hot leg level instruments and failure to close the air-operated valves CVS-V045 and V047 to preclude initial overdraining of the RCS, during draining of the system to mid-loop	RCS-MAN0DS1 (Not in SIMON - this is used in event tree RCS-OD)	Inconsistency among RCS level readings from pressurizer wide-range level instrument and hot leg level instruments	PMS, PLS, DIS	Procedure - SHORT Tw > 3 hours Ta = 5 min Stress level - HIGH	SRO & STA	Control room	4 04E-04	N/A
	c. Failure to detect failure of automatic closure of air-operated valves CVS-V045 and V047, and failure to manually close the valves, when low hot leg level is reached during draining of the system to mid-loop	RCS-MANODS2 (Not in SIMON - this is used in event tree RCS-OD)	Low hot leg level; (1 associated alarm is assumed available)	PMS	Procedure - SHORT Tw ~ 5 min Ta = 1 min Stress level - HIGH	N/A	Control room	1.39E-02	N/A
RTS	a. Failure to initiate step-in of control rods in one minute, given manual scram failure during ATWS	ATW-MAN01 (767)	Rod bottom lights not lit, reactor trip and bypass breakers closed, rod position indicators not at zero, neutron flux not decreasing (four associated alarms are assumed available)	DAS, PLS, PMS	Procedure - SHORT Tw = 1 min Ta = 1 min Stress level - HIGH	SRO & STA	Control room	3.30E-02	5 17E-01

Table 30-1 (Sheet 13 of 16)

AP100 HUMAN ERROR PROBABILITY SUMMARY RESULTS

System	Description of Operator Error	Event ID (SIMON LINE #)	Cue(s)	DAS/PLS/PMS Available	PSF	Checking Recovery (by)	Location	Mean HEP Uncond.	Mean HEP Cond.
RTS (cont'd)	b. Failure to recognize the need and failure to manually trip the reactor (through the PMS) in one minute, given ATWS	ATW-MAN03 (777)	Rod bottom lights not lit, reactor trip and bypass breakers closed, rod position indicators not at zero, neutron flux not decreasing (four associated alarms are assumed available)	DAS, PLS, PMS	Procedure - SHORT Tw = 1 min Ta = 30 sec Stress level - HIGH	None	Control room	5 20E-02	N/A
	c. Failure to manually trip the reactor (through the DAS) in one minute, given ATWS	ATW-MAN04 (784)	Cues are addressed in ATW-MAN03	DAS, PLS, PMS	Procedure - SHORT Tw = 1 min Ta = 40 sec Stress level - HIGH	None	Control room	5 20E-02	5 26E-01
	d. Failure to recognize the need and failure to manually trip the reactor (through the PMS) in seven minutes, given ATWS	ATW-MAN05 (779)	Rod bottom lights not lit, reactor trip and bypass breakers closed, rod position indicators not at zero, neutron flux not decreasing (four associated alarms are assumed available)	DAS, PLS, PMS	Procedure - SHORT Tw = 7 min Ta = 30 sec Stress level - HIGH	SRO	Control room	5 20E-03	N/A
	e. Failure to manually trip the reactor (through the DAS) in seven minutes, given ATWS	ATW-MAN06 (780)	Cues are addressed in ATW-MAN05	DAS, PLS, PMS	Procedure - SHORT Tw = 7 min Ta = 40 sec Stress level - HIGH	SRO	Control room	5 20E-03	5 00E-01
	f Failure to perform a controlled shutdown of the reactor during an accident	RTN-MAN01 (796)	Cue is success of CVS, low makeup water level	DAS, PLS, PMS	Procedure - LONG Tw = 1 hour Ta = 5 min Stress level - HIGH	SRO & STA	Control room	7.70E-04	N/A
SFWS	a. Failure to start the startup feedwater pumps, given a loss of main feedwater during a transient	FWN-MAN02 (771)	Cues are addressed in HPM-MAN01	DAS, PLS, PMS	Procedure - LONG Tw = 30 min Ta = 10 min Stress level - MODERATE	SRO & STA	Control room	1 65E-04	N/A
	b. Failure to start startup feedwater pumps, given a loss of main feedwater during a LOOP	FWN-MAN03 (772)	Cues are addressed in HPM-MAN01	DAS, PLS, PMS	Procedure - LONG Tw = 30 min Ta = 10 min Stress level - HIGH	SRO & STA	Control room	1 03E-03	N/A

Table 30-1 (Sheet 14 of 16)

AP100 HUMAN ERROR PROBABILITY SUMMARY RESULTS

System	Description of Operator Error	Event ID (SIMON LINE #)	Cue(s)	DAS/PLS/PMS Available	PSF	Checking Recovery (by)	Location	Mean HEP Uncond.	Mean HEP Cond.
SFWS (cont'd)	c. Failure to regulate the startup feedwater following full opening of the regulating valves after a loss of compressed air	REG-MAN00 (785)	Based on engineering judgment, it is assumed that approximately seven alarms are available for the loss of compressed air scenario	PLS	Procedure - SHORT Tw = 50 min Ta = 30 min Stress level - HIGH	SRO	Ex-control room	2 04E-01	N/A
SG	a. Failure to recognize the need and failure to isolate a failed steam generator following a steam line break	CIA-MAN01 (763)	Low SG pressure, high steam flow (two associated alarms are assumed available)	PMS, PLS	Procedure - LONG Tw = 10 min Ta = 8 min Stress level - HIGH	SRO	Control room	5.90E-03	N/A
	b Failure to close main steam isolation valve to isolate the faulted steam generator, given a steam generator tube rupture event	CIB-MAN01 (765)	Cues are addressed in CIB-MAN00	DAS, PLS, PMS	Procedure - LONG Tw = 30 min Ta = 15 min Stress level - HIGH	SRO & STA	Control room	1.34E-03	1 50E-01
	c. Inadvertent opening of a steam generator PORV with the failure to reclose it	SGA-MAN01 (Not in SIMON - used in IE frequency)	High steam flow (one alarm associated with inadvertent action is assumed available)	PMS, PLS	Procedure - N/A Tw = 10 min Ta = 5 min Stress level - LOW (for initial commission) - MODERATE (for subsequent actions)	SRO	Control room	1.00E-05	N/A
SWS	a Failure to recognize the need and failure to open air-operated valve on the motor strainer line during normal operation	SWN-MAN01N (740)	High strainer differential pressure (three alarms are assumed available for this scenario)	PLS	Procedure - SHORT Tw = 30 min Ta = 10 min Stress level - MODERATE	SRO & STA	Control room	1 72E-04	N/A

Table 30-1 (Sheet 15 of 16)

AP100 HUMAN ERROR PROBABILITY SUMMARY RESULTS

System	Description of Operator Error	Event ID (SIMON LINE #)	Cue(s)	DAS/PLS/PMS Available	PSF	Checking Recovery (by)	Location	Mean HEP Uncond.	Mean HEP Cond.
SWS (cont'd)	b Failure to recognize the need and failure to start the standby service water pump during a LOCA, LOOP, or transient	SWB-MAN02 (743)	Low service water flow (three alarms are assumed available for this scenario)	PLS	Procedure - SHORT Tw = 30 min Ta = 10 min Stress level - HIGH	SRO & STA	Control room	1 60E-03	N/A
	c. Failure to recognize the need and failure to start the standby service water pump during normal operation	SWB-MAN02N (741)	Low service water flow (three alarms are assumed available for this scenario)	PLS	Procedure - SHORT Tw = 30 min Ta = 10 min Stress level - MODERATE	SRO & STA	Control room	2.56E-04	N/A
	d. Failure to recognize the need and failure to refill the service water basin during a loss-of-offsite power event with subsequent loss of automatic refill capability through the raw water system	SWN-MAN03 (799)	Low service water basin water level (1 alarm is assumed available for this scenario)	PLS	Procedure - SHORT Tw = 30 min Ta = 5 min Stress level - HIGH	SRO, STA & AUX. OPER.	Control room & Ex-control room	4 00E-02	N/A
TCCWS	a. Failure to recognize the need and failure to start the standby turbine closed cooling water pump, during a LOCA, LOOP, or transient	TCB-MAN01 (775)	Low TCCW flow (three alarms are assumed available for this scenario)	PLS	Procedure - LONG Tw = 30 min Ta = 10 min Stress level - HIGH	SRO & STA	Control room	3 10E-03	N/A
	b. Failure to recognize the need and failure to locally align the turbine closed cooling water system HX if one of the two operating HXs fails during an accident	TCB-MAN02 (726)	HX differential flow out of range, HX differential temperature out of range (two alarms are assumed available for this scenario)	PLS	Procedure - LONG Tw = 60 min Ta = 30 min Stress level - HIGH	SRO, STA, & AUX OPER.	Ex-control room	4.03E-02	N/A

Table 30-1 (Sheet 16 of 16)

AP100 HUMAN ERROR PROBABILITY SUMMARY RESULTS

System	Description of Operator Error	Event ID (SIMON LINE #)	Cue(s)	DAS/PLS/PMS/ Available	PSF	Checking Recovery (by)	Location	Mean HEP Uncond.	Mean HEP Cond.
VLS	a. Failure to recognize the need and failure to actuate the hydrogen control system, given core damage following a LOCA	VLN-MAN01 (774)	Core-exit temperature > 700°F	PMS	Procedure - LONG Tw = 15 min Ta = 10 min Stress level - HIGH	SRO & STA	Control room	1.28E-03	5 00E-01
	b Failure to recognize the need and failure to align the standby chiller during a LOCA	VWN-MAN01 (761)	High chilled water temperature, CVS pump tripped (three alarms are assumed available for this scenario)\	PLS	Procedure - LONG Tw = 1 hr Ta = 30 min Stress level - HIGH	SRO & STA	Control room	5 16E-03	N/A

Note:
Events preceded by "*" NOT used in PRA model

Table 30-2 (Sheet 1 of 2)

MANUAL DAS ACTUATION

System	SYS-MANDAS/IIEP		SYS-RECDAS/IIEP		Basis
ADS	ADS-MANDAS	6.99E-03	ADS-RECDAS	1.50E-01	Unconditional HEP ADS-MANDAS if same as (ADN-MAN01 + LPM-MAN02). By using the PSFs for ADN-MAN01, ADS-RECDAS is evaluated as having a moderate dependency on ADS-MANDAS
CIS	CIS-MANDAS	1.20E-03	CIS-RECDAS	5.00E-02	Unconditional HEP CIS-MANDAS is same as CIC-MAN01. By using the PSFs for CIC-MAN01, CIC-RECDAS is evaluated as having a low dependency on CIC-MANDAS
CMT	CMT-MANDAS	1.16E-02	CMT-RECDAS	5.06E-01	Unconditional HEP CMT-MANDAS is same as (CMN-MAN01 + LPM-MAN02). By using the PSFs for CMN-MAN01, CMT-RECDAS is evaluated as having a high dependency on CMT-MANDAS
PCS	PCS-MANDAS	1.48E-04	PCS-RECDAS	5.00E-02	Unconditional HEP PCS-MANDAS is same as PCN-MAN01. By using the PSFs for PCN-MAN01, PCS-RECDAS is evaluated as having a low dependency on PCS-MANDAS
RHR	RHR-MANDAS	2.91E-03	RHR-RECDAS	1.50E-01	Unconditional HEP RHR-MANDAS is same as (PRN-MAN02 + HPM-MAN01). By using the PSFs for PRN-MAN02, RHR-RECDAS is evaluated as having a moderate dependency on RHR-MANDAS

Table 30-2 (Sheet 2 of 2)

MANUAL DAS ACTUATION

System	SYS-MANDAS/HEP		SYS-RECDAS/HEP		Basis
RPT	RPT-MANDAS	6.33E-03	RPT-RECDAS	1.50E-01	Unconditional HEP RPT-MANDAS is same as (RCN-MAN01 + LPM-MAN01). By using the PSFs for RCN-MAN01, RPT-RECDAS is evaluated as having a moderate dependency on RPT-MANDAS
VLS	VLS-MANDAS	3.32E-04	VLS-RECDAS	5.00E-02	Unconditional HEP VLS-MANDAS is same as VLN-MAN01. By using the PSFs for VLN-MAN01, VLS-RECDAS is evaluated as having a low dependency on VLS-MANDAS

Table 30-3 (Sheet 1 of 14)

DEPENDENCY LEVEL EVALUATION SUMMARY

Case	Preceding Event		Dependent Event Characteristics							
				Times		Tasks	Procedure			
Name: Event Tree (Nodes)	Name	Stress	Name	Available	Actual	Simple/ Complex	Clear/ Unclear	Dependency Level	Cond. Prob.	Uncond. Prob.
MLOCA										
CM2L/RNR	LPM-MAN02 CMN-MAN01	High	RHN-MAN01	5 min.	1 min.	Simple; < 10 steps	Clear	High	5.00E-01	2.90E-03
CM2L/RNR	LPM-MAN02 CMN-MAN01	High	RHN-MAN06	30 min.	10 min.	Simple; < 10 steps	Clear	Moderate	1.50E-01	1 05E-03
RNR/ADQ	RHN-MAN01 RHN-MAN06	High	LPM-MAN02	20 min	15 min	Complex; > 10 steps	Clear	High	5 00E -01	3.30E-03
RNR/ADQ	RHN-MAN01 RHN-MAN06	High	ADN-MAN01	5 min.	3 min.	Complex; 2 people	Clear	High	5.00E -01	3 02E-03
CM2L/ADQ	CMN-MAN01	High	ADN-MAN01	N/A	N/A	Complex; 2 people	Clear	Low	5 00E-02	3.02E-03
CMT Line Break (Conditionals are same as MLOCA)										
CM1A/RNR	LPM-MAN02 CMN-MAN01	High	RHN-MAN01	5 min	1 min	Simple, < 10 steps	Clear	High	5 00E-01	2.90E-03
CM1A/RNR	LPM-MAN02 CMN-MAN01	High	RHN-MAN06	30 min	10 min	Simple; < 10 steps	Clear	Moderate	1 50E-01	1 05E-03
RNR/ADQ	RHN-MAN01 RHN-MAN06	High	LPM-MAN02	20 min.	15 min	Complex; > 10 steps	Clear	High	5 00E -01	3.30E-03
RNR/ADQ	RHN-MAN01 RHN-MAN06	High	ADN-MAN01	N/A	N/A	Complex; 2 people	Clear	Low	5.00E -02	3 02E-03
CM1A/ADQ	CMN-MAN01	High	ADN-MAN01	5 min	3 min	Complex; 2 people	Clear	High	5 00E-01	3 02E-03

Table 30-3 (Sheet 2 of 14)

DEPENDENCY LEVEL EVALUATION SUMMARY

Case	Preceding Event		Dependent Event Characteristics							
				Times		Tasks	Procedure			
Name: Event Tree (Nodes)	Name	Stress	Name	Available	Actual	Simple/ Complex	Clear/ Unclear	Dependency Level	Cond. Prob.	Uncond. Prob.
SI Line Break										
CM1A/ADQ	CMN-MAN01	High	ADN-MAN01	5 min	3 min.	Complex; 2 people	Clear	High	5 00E-01	3.02E-03
Intermediate LOCA (Conditionals for ATW-S included)										
CM2NL/ADQ	CMN-MAN01	High	ADN-MAN01	5 min	3 min	Complex, 2 people	Clear	High	5 00E-01	3 02E-03
RCN/ADQ	RCN-MAN01	High	ADN-MAN01	N/A	N/A	Complex; 2 people	Clear	Low	5 00E -02	3 02E-03
RNR/ADQ	RCN-MAN01	High	LPM-MAN02	20 min	15 min	Complex; > 10 steps	Clear	High	5 00E-01	3 30E-03
ADM/RNR	LPM-MAN02 ADN-MAN01	High	RHN-MAN01	5 min.	1 min.	Simple, < 10 steps	Clear	High	5 00E-01	2 90E-03
RTPMS/DAS	ATW-MAN03	High	ATW-MAN04	1 min.	40 sec.	Simple, 1 step	Clear	High	5.26E-01	5.20E-02
RTPMS/RTSTP	ATW-MAN03	High	ATW-MAN01	>1 min	Start within 1 min	Simple; (continuous)	Clear	High	5 17E-01	3.30E-02
RTSTP/CM2AB	ATW-MAN01	High	LPM-MAN01	30 min	15 min	Complex; > 10 steps	Clear	High	5 00E-01	1.34E-03
RTSTP/CM2AB	ATW-MAN01	High	CMN-MAN01	15 min	15 min	Complex; > 10 steps	Clear	High	5 00E-01	5.10E-03
RTSTP/RCT	ATW-MAN01	High	RCN-MAN01	20 min	15 min	Complex, > 10 steps	Clear	High	5 00E-01	4 13E-03
RNR/RECIRC	RHN-MAN01	High	REN-MAN02	60 min	10 min.	Simple; < 10 steps	Clear	Moderate	1 50E-01	1.99E-03

Table 30-3 (Sheet 3 of 14)

DEPENDENCY LEVEL EVALUATION SUMMARY

Case	Preceding Event		Dependent Event Characteristics							
				Times		Tasks	Procedure			
Name: Event Tree (Nodes)	Name	Stress	Name	Available	Actual	Simple/ Complex	Clear/ Unclear	Dependency Level	Cond. Prob.	Uncond. Prob.
SLOCA (Conditionals for ATW-S excluded)										
CM2SL/PRL	LPM-MAN01 CMN-MAN01	High	HPM-MAN01	30 min.	15 min.	Complex; > 10 steps	Clear	High	5 00E-01	5 02E-04
CM2SL/PRL	LPM-MAN01 CMN-MAN01	High	PRN-MAN02	N/A	N/A	Complex; > 10 steps	Clear	Low	5 00E-02	2.55E-03
RCL/PRL	RCN-MAN01	High	HPM-MAN01	30 min.	15 min	Complex; > 10 steps	Clear	High	5 00E-01	5 02E-04
RCL/PRL	RCN-MAN01	High	PRN-MAN02	N/A	N/A	Complex; > 10 steps	Clear	Low	5 00E-02	2 55E-03
PRL/ADA PRL/ADT	HPM-MAN01 PRN-MAN02	High	LPM-MAN01	30 min.	15 min	Complex; > 10 steps	Clear	High	5 00E-01	1.34E-03
PRL/ADA PRL/ADT	HPM-MAN01 PRN-MAN02	High	ADN-MAN01	N/A	N/A	Complex; 2 people	Clear	Low	5 00E -02	3 02E-03
CM2SL/ADT	CMN-MAN01	High	ADN-MAN01	5 min	3 min.	Complex; 2 people	Clear	High	5 00E-01	3 02E-03
ADA/RNR	LPM-MAN01 ADN-MAN01	High	RHN-MAN01	5 min	1 min	Simple; < 10 steps	Clear	High	5 00E-01	2 90E-03

Table 30-3 (Sheet 4 of 14)

DEPENDENCY LEVEL EVALUATION SUMMARY

Case	Preceding Event		Dependent Event Characteristics							
Name: Event Tree (Nodes)	Name	Stress	Name	Times		Tasks	Procedure	Dependency Level	Cond. Prob.	Uncond. Prob.
				Available	Actual	Simple/ Complex	Clear/ Unclear			
RCS Leakage										
CVS1/CM2SL	CVN-MAN03	High	LPM-MAN01	30 min	15 min	Complex, > 10 steps	Clear	High	5.00E-01	1.34E-03
CVS1/CM2SL	CVN-MAN03	High	CMN-MAN01	N/A	N/A	Complex, > 10 steps	Clear	Low	5 00E-02	5 10E-03
CVS1/RCL	CVN-MAN03	High	RCN-MAN01	20 min	15 min.	Complex; > 10 steps	Clear	High	5.00E-01	4 13E-03
SDMAN/ CM2SL	RTN-MAN01	High	LPM-MAN01	30 min.	15 min	Complex, > 10 steps	Clear	High	5 00E-01	1.34E-03
SDMAN/ CM2SL	RTN-MAN01	High	CMN-MAN01	N/A	N/A	Complex; > 10 steps	Clear	Low	5 00E-02	5.10E-03
SDMAN/RCL	RTN-MAN01	High	RCN-MAN01	20 min.	15 min.	Complex; > 10 steps	Clear	High	5 00E-01	4.13E-03

Table 30-3 (Sheet 5 of 14)

DEPENDENCY LEVEL EVALUATION SUMMARY

Case	Preceding Event		Dependent Event Characteristics							
				Times		Tasks	Procedure			
Name: Event Tree (Nodes)	Name	Stress	Name	Available	Actual	Simple/ Complex	Clear/ Unclear	Dependency Level	Cond. Prob.	Uncond. Prob.
PRHR Leak										
CVS1/CM2SL	CVN-MAN03	High	LPM-MAN01	30 min	15 min.	Complex; > 10 steps	Clear	High	5 00E-01	1 34E-03
CVS1/CM2SL	CVN-MAN03	High	CMN-MAN01	N/A	N/A	Complex; > 10 steps	Clear	Low	5 00E-02	5 10E-03
CVS1/RCL	CVN-MAN03	High	RCN-MAN01	20 min	15 min	Complex; > 10 steps	Clear	High	5.00E-01	4.13E-03
PRI/CM2SL	PRI-MAN01	High	LPM-MAN01	30 min.	15 min.	Complex; > 10 steps	Clear	High	5 00E-01	1.34E-03
PRI/CM2SL	PRI-MAN01	High	CMN-MAN01	N/A	N/A	Complex; > 10 steps	Clear	Low	5 00E-02	5.10E-03
PRI/RCL	PRI-MAN01	High	RCN-MAN01	20 min.	15 min.	Complex; > 10 steps	Clear	High	5 00E-01	4.13E-03
SGTR										
CM2SL/PRL	LPM-MAN01 CMN-MAN01	High	HPM-MAN01	30 min.	15 min	Complex; > 10 steps	Clear	High	5.00E-01	5.02E-04
CM2SL/PRL	LPM-MAN01 CMN-MAN01	High	PRN-MAN02	30 min.	15 min.	Complex; > 10 steps	Clear	High	5 00E-01	2.55E-03
RCL/PRL	RCN-MAN01	High	HPM-MAN01	30 min	15 min	Complex; > 10 steps	Clear	High	5 00E-01	5 02E-04
RCL/PRL	RCN-MAN01	High	PRN-MAN02	30 min.	15 min	Complex; > 10 steps	Clear	High	5 00E-01	2.55E-03
PRL/ADA PRL/ADT	HPM-MAN01 PRN-MAN02	High	LPM-MAN01	30 min.	15 min.	Complex; > 10 steps	Clear	High	5 00E-01	1.34E-03

Table 30-3 (Sheet 6 of 14)

DEPENDENCY LEVEL EVALUATION SUMMARY

Case	Preceding Event		Dependent Event Characteristics							
				Times		Tasks	Procedure			
Name: Event Tree (Nodes)	Name	Stress	Name	Available	Actual	Simple/ Complex	Clear/ Unclear	Dependency Level	Cond. Prob.	Uncond. Prob.
SGTR (cont)										
PRL/ADA PRL/ADT	HPM-MAN01 PRN-MAN02	High	ADN-MAN01	5 min.	3 min.	Complex; 2 people	Clear	High	5 00E -01	3 02E-03
CM2SL/ADT	CMN-MAN01	High	ADN-MAN01	5 min.	3 min.	Complex; 2 people	Clear	High	5.00E-01	3 02E-03
ADA/RNR	LPM-MAN01 ADN-MAN01	High	RHN-MAN01	5 min.	1 min	Simple; < 10 steps	Clear	High	5.00E-01	2 90E-03
CVS/XCIB	CVN-MAN03	High	CIB-MAN00	30 min.	15 min	Simple; < 10 steps	Clear	Moderate	1 50E-01	1 84E-03
CVS/XCIB	CVN-MAN03	High	CIB-MAN01	N/A	N/A	Simple, < 10 steps	Clear	Low	5 00E-02	1 34E-03
CVS/XCIB	CVN-MAN03	High	SGHL-MAN01	30 min.	10 min	Simple, < 10 steps	Clear	Moderate	1.50E-01	3 91E-03
SFW1/XCIB	HPM-MAN01 FWN-MAN02 REG-MAN00	High	CIB-MAN00	30 min	15 min.	Simple, < 10 steps	Clear	Moderate	1 50E-01	1.84E-03
SFW1/XCIB	HPM-MAN01 FWN-MAN02 REG-MAN00	High	CIB-MAN01	N/A	N/A	Simple; < 10 steps	Clear	Low	5 00E-02	1.34E-03
SFW1/XCIB	HPM-MAN01 FWN-MAN02 REG-MAN00	High	SGHL-MAN01	30 min.	10 min	Simple, < 10 steps	Clear	Moderate	1.50E-01	3 91E-03
COND1/XCIB	DUMP-MAN01	High	CIB-MAN01	30 min	15 min	Simple; < 10 steps	Clear	Moderate	1 50E-01	1.34E-03
COND1/XCIB	CIB-MAN00 DUMP-MAN01	High	SGHL-MAN01	30 min	10 min.	Simple, < 10 steps	Clear	Moderate	1 50E-01	3 91E-03

Table 30-3 (Sheet 7 of 14)

DEPENDENCY LEVEL EVALUATION SUMMARY

Case	Preceding Event		Dependent Event Characteristics							
				Times		Tasks	Procedure			
Name: Event Tree (Nodes)	Name	Stress	Name	Available	Actual	Simple/ Complex	Clear/ Unclear	Dependency Level	Cond. Prob.	Uncond. Prob.
SGTR (cont.)										
CVS/CM2SL	CVN-MAN03	High	LPM-MAN01	30 min	15 min.	Complex; > 10 steps	Clear	High	5 00E-01	1 34E-03
CVS/CM2SL	CVN-MAN03	High	CMN-MAN01	N/A	N/A	Complex; > 10 steps	Clear	Low	5 00E-02	5.10E-03
CVS/RCL	CVN-MAN03	High	RCN-MAN01	20 min.	15 min.	Complex; > 10 steps	Clear	High	5 00E-01	4.13E-03
CSAX & ADF	CIB-MAN00 CVN-MAN00	High	ADF-MAN01	N/A	N/A	Complex; 2 people	Clear	High	5 00E-01	N/A
CSAX/XCIB	CVN-MAN00	High	CIB-MAN01	30 min.	15 min.	Simple, < 10 steps	Clear	Moderate	1.50E-01	1.34E-03
CSAX/XCIB	CVN-MAN00	High	SGHL-MAN01	30 min.	10 min.	Simple; < 10 steps	Clear	Moderate	1.50E-01	3.91E-03
CSAX/ADS	CIB-MAN00 CVN-MAN00	High	ADN-MAN01	N/A	N/A	Complex; 2 people	Clear	Low	5.00E -02	3 02E-03
XCIB/SGTRC	CIB-MAN00 CIB-MAN01 SGHL-MAN01	High	LPM-MAN01	30 min.	15 min	Complex; > 10 steps	Clear	High	5 00E-01	1 34E-03
XCIB/SGTRC	CIB-MAN00 CIB-MAN01 SGHL-MAN01	High	CMN-MAN01	N/A	N/A	Complex, > 10 steps	Clear	Low	5 00E-02	5.10E-03
XCIB/SGTRC	CIB-MAN00 CIB-MAN01 SGHL-MAN01	High	RCN-MAN01	20 min	15 min.	Complex; > 10 steps	Clear	High	5 00E-01	4 13E-03

Table 30-3 (Sheet 8 of 14)

DEPENDENCY LEVEL EVALUATION SUMMARY

Case	Preceding Event		Dependent Event Characteristics							
				Times		Tasks	Procedure			
Name: Event Tree (Nodes)	Name	Stress	Name	Available	Actual	Simple/ Complex	Clear/ Unclear	Dependency Level	Cond. Prob.	Uncond. Prob.
Transient: with MFW, w/loss of RCS flow; w/loss of MFW to 1 SG, w/power excursion; w/loss of CCW/SW; Loss of MFW										
SFWT/PRT	FWN-MAN02	Moderate	PRN-MAN01	30 min	10 min	Simple; < 10 steps	Clear	Low	5 00E-02	4 08E-04
PRT/CM2AB	HPM-MAN01 PRN-MAN01	High	LPM-MAN01	30 min.	15 min	Complex, > 10 steps	Clear	High	5.00E-01	1 34E-03
PRT/CM2AB	HPM-MAN01 PRN-MAN01	High	CMN-MAN01	N/A	N/A	Complex, > 10 steps	Clear	Low	5 00E-01	5.10E-03
PRT/RCT, RCN	HPM-MAN01 PRN-MAN01	High	RCN-MAN01	20 min.	15 min	Complex, > 10 steps	Clear	High	5 00E-01	4 13E-03
CM2AB/ADT	CMN-MAN01	High	ADN-MAN01	5 min	3 min.	Complex; 2 people	Clear	High	5 00E-01	3 02E-03
RCT/ADT	RCN-MAN01	High	ADN-MAN01	N/A	N/A	Complex; 2 people	Clear	Low	5 00E-02	3 02E-03
PRT/CM2NL	HPM-MAN01 PRN-MAN01	High	LPM-MAN02	20 min.	15 min	Complex; > 10 steps	Clear	High	5.00E-01	3 30E-03
Loss of Condenser (Conditionals are same as Transients with the following addition)										
SFW/PRT	REG-MAN00	High	PRN-MAN01	N/A	N/A	Simple, < 10 steps	Clear	Low	5 00E-02	4 08E-04

Table 30-3 (Sheet 9 of 14)

DEPENDENCY LEVEL EVALUATION SUMMARY

Case	Preceding Event		Dependent Event Characteristics							
Name: Event Tree (Nodes)	Name	Stress	Name	Times		Tasks	Procedure	Dependency Level	Cond. Prob.	Uncond. Prob.
				Available	Actual	Simple/ Complex	Clear/ Unclear			
Loss of Compressed Air (Conditionals are a subset of Transient)										
Loss of Offsite Power (Conditionals are same as Transients with the following additions)										
SFWP/PRP	FWN-MAN03 REG-MAN00	High	PRN-MAN02	N/A	N/A	Simple; < 10 steps	Clear	Low	5 00E-02	2.55E-03
DGEN/CM2P	ZON-MAN01	High	LPM-MAN02	20 min	15 min.	Complex; > 10 steps	Clear	High	5.00E-01	3 30E-03
DGEN/CM2P	ZON-MAN01	High	CMN-MAN01	N/A	N/A	Complex; > 10 steps	Clear	Low	5 00E-02	5.10E-03
PRP/RCN	HPM-MAN01 PRN-MAN02	High	RCN-MAN01	20 min.	15 min.	Complex; > 10 steps	Clear	High	5 00E-01	4 13E-03
PRP/CM2NL	HPM-MAN01 PRN-MAN02	High	LPM-MAN02	20 min	15 min.	Complex; > 10 steps	Clear	High	5 00E-01	3 30E-03
PRP/CM2NL	HPM-MAN01 PRN-MAN02	High	CMN-MAN01	N/A	N/A	Complex; > 10 steps	Clear	Low	5 00E-02	5.10E-03

Table 30-3 (Sheet 10 of 14)

DEPENDENCY LEVEL EVALUATION SUMMARY

Case	Preceding Event		Dependent Event Characteristics							
				Times		Tasks	Procedure			
Name: Event Tree (Nodes)	Name	Stress	Name	Available	Actual	Simple/ Complex	Clear/ Unclear	Dependency Level	Cond. Prob.	Uncond. Prob.
MSLB Events; Stuck open secondary side safety valve (Conditionals are same as subsets of Transients and SLOCA with the following additions)										
CSP	CVN-MAN03	High	PRN-MAN03	5 min.	1 min	Simple; < 10 steps	Clear	High	5 00E-01	8 76E-04
CM2SL/CSP	LPM-MAN01 CMN-MAN01 RCN-MAN01	High	CVN-MAN03	30 min	10 min	Simple; < 10 steps	Clear	Moderate	1.50E-01	1.07E-03
CM2SL/CSP	LPM-MAN01 CMN-MAN01 RCN-MAN01	High	PRN-MAN03	N/A	N/A	Simple, < 10 steps	Clear	Low	5.00E-02	8.76E-04
CSP/ADT	CVN-MAN03 PRN-MAN03	High	LPM-MAN01	30 min	15 min	Complex; > 10 steps	Clear	High	5 00E-01	1.34E-03
CSP/ADT	CVN-MAN03 PRN-MAN03	High	ADN-MAN01	N/A	N/A	Complex; 2 people	Clear	Low	5 00E-02	3.02E-03
CIA/CM2SL	CIA-MAN01	High	LPM-MAN01	30 min.	15 min.	Complex, > 10 steps	Clear	High	5.00E-01	1 34E-03
CIA/CM2SL	CIA-MAN01	High	CMN-MAN01	N/A	N/A	Complex; > 10 steps	Clear	Low	5 00E-02	5 10E-03
CIA/RCL	CIA-MAN01	High	RCN-MAN01	20 min	15 min	Complex; > 10 steps	Clear	High	5 00E-01	4.13E-03

Table 30-3 (Sheet 11 of 14)

DEPENDENCY LEVEL EVALUATION SUMMARY

Case	Preceding Event		Dependent Event Characteristics							
				Times		Tasks	Procedure			
Name: Event Tree (Nodes)	Name	Stress	Name	Available	Actual	Simple/ Complex	Clear/ Unclear	Dependency Level	Cond. Prob.	Uncond. Prob.
ATWSC: Loss of FW w/o Scram (Conditionals are same as subset of Transients with the following additions)										
RTSTP/ CSBOR1	ATW-MAN01	High	ATW-MAN11	60 min	30 min	Simple, < 10 steps	Clear	Moderate	1.50E-01	1.06E-03
RTSTP/ CSBOR1	ATW-MAN01	High	CVN-MAN02	60 min.	30 min	Simple, < 10 steps	Clear	Moderate	1.50E-01	1.58E-03
CSBOR1/ CM2AB	ATW-MAN11 CVN-MAN02	High	LPM-MAN01	30 min	15 min	Complex; > 10 steps	Clear	High	5 00E-01	1 34E-03
CSBOR1/ CM2AB	ATW-MAN11 CVN-MAN02	High	CMN-MAN01	N/A	N/A	Complex; > 10 steps	Clear	Low	5 00E-02	5.10E-03
CSBOR1/RCL	ATW-MAN11 CVN-MAN02	High	RCN-MAN01	20 min.	15 min.	Complex; > 10 steps	Clear	High	5 00E-01	4 13E-03
ATWS: Loss of FW w/o Scram (Conditionals are same as ATWSC with the following addition)										
RTPMSs/DAS	ATW-MAN03	High	ATW-MAN04	1 min.	40 sec.	Simple; 1 step	Clear	High	5 26E-01	5 20E-02
DAS/RTSTP	ATW-MAN04	High	ATW-MAN01	>1 min	Start within 1 min	Simple; (continuous)	Clear	High	5.17E-01	3 30E-02

Table 30-3 (Sheet 12 of 14)

DEPENDENCY LEVEL EVALUATION SUMMARY

Case	Preceding Event		Dependent Event Characteristics							
				Times		Tasks	Procedure			
Name: Event Tree (Nodes)	Name	Stress	Name	Available	Actual	Simple/ Complex	Clear/ Unclear	Dependency Level	Cond. Prob.	Uncond. Prob.
ATW-S: SI w/o scram										
RTPMS/DAS	ATW-MAN03	High	ATW-MAN04	1 min.	40 sec.	Simple; 1 step	Clear	High	5.26E-01	5 20E-02
RTPMS/RTSTP	ATW-MAN03	High	ATW-MAN01	>1 min	Start within 1 min	Simple; (continuous)	Clear	High	5.17E-01	3.30E-02
RTSTP/CM2AB	ATW-MAN01	High	LPM-MAN01	30 min	15 min	Complex, > 10 steps	Clear	High	5.00E-01	1 34E-03
RTSTP/CM2AB	ATW-MAN01	High	CMN-MAN01	N/A	N/A	Complex, > 10 steps	Clear	Low	5 00E-02	5.10E-03
RTSTP/RCT	ATW-MAN01	High	RCN-MAN01	20 min	15 min.	Complex, > 10 steps	Clear	High	5 00E-01	4.13E-03
RNR/RECIRC	RHN-MAN01	High	REN-MAN02	60 min.	10 min	Simple, < 10 steps	Clear	Moderate	1 50E-01	1 99E-03
ATW-T. ATWS precursors w/ MFW available										
RTPMS1/DAS1	ATW-MAN05	High	ATW-MAN06	7 min.	40 sec	Simple; 1 step	Clear	High	5 00E-01	5 20E-03
DAS1/CSBOR1	ATW-MAN06	High	ATW-MAN11	60 min.	30 min	Simple, < 10 steps	Clear	Moderate	1 50E-01	1 06E-03
DAS1/CSBOR1	ATW-MAN06	High	CVN-MAN02	60 min	30 min.	Simple, < 10 steps	Clear	Moderate	1.50E-01	1.58E-03

Table 30-3 (Sheet 13 of 14)

DEPENDENCY LEVEL EVALUATION SUMMARY

Case	Preceding Event		Dependent Event Characteristics							
				Times		Tasks	Procedure			
Name: Event Tree (Nodes)	Name	Stress	Name	Available	Actual	Simple/ Complex	Clear/ Unclear	Dependency Level	Cond. Prob.	Uncond. Prob.
Others										
N/A	PRI-MAN01 VWN-MAN01	N/A	REN-MAN04	N/A	N/A	Simple; > 10 steps	Clear	Moderate	1.50E-01	
N/A	DUMP-MAN01	N/A	REN-MAN04	N/A	N/A	Simple; > 10 steps	Clear	Low	5 00E-02	
N/A	DUMP-MAN01	N/A	ADN-MAN01	N/A	N/A	Complex	Clear	Low	5 00E-02	
N/A	PRI-MAN01 VWN-MAN01	N/A	RHN-MAN01	N/A	N/A	Simple, > 10 steps	Clear	Low	5 00E-02	
N/A	CIB-MAN00	N/A	RNH-MAN06	N/A	N/A	Simple, > 10 steps	Clear	Moderate	1.50E-01	
N/A	CIB-MAN01	N/A	RHN-MAN06	N/A	N/A	Simple; > 10 steps	Clear	Low	5 00E-02	

Table 30-3 (Sheet 14 of 14)

DEPENDENCY LEVEL EVALUATION SUMMARY

Case	Preceding Event		Dependent Event Characteristics							
				Times		Tasks	Procedure			
Name: Event Tree (Nodes)	Name	Stress	Name	Available	Actual	Simple/ Complex	Clear/ Unclear	Dependency Level	Cond. Prob.	Uncond. Prob.
PDS Sub-state										
N/A	LPM-MAN01	High	LPM-REC01	N/A	N/A	N/A	N/A	Low	5.00E-02	1 34E-03
N/A	ADN-MAN01	High	ADN-REC01	N/A	N/A	N/A	N/A	Low	5.00E-02	3 02E-03
N/A	CMN-MAN01	High	CMN-REC01	N/A	N/A	N/A	N/A	Low	5.00E-02	5.10E-03
ADTLT/ XCICPO	LPM-REC01 ADN-REC01	High	CIC-MAN01	1 hr.	30 min.	Complex; > 10 steps	Clear	Moderate	1.50E-01	5 71E-03
XCICPO, VLH/IWF	CIC-MAN01 VLN-MAN01	High	REN-MAN03	20 min	10 min.	Simple, < 10 steps	Clear	Moderate	1.50E-01	3.40E-03
PCT/VLH	PCN-MAN01	High	VLN-MAN01	15 min	10 min.	Simple; < 10 steps	Clear	High	5 00E-01	1 28E-03

Table 30-4 (Sheet 1 of 3)

DEPENDENCY LEVEL EVALUATION

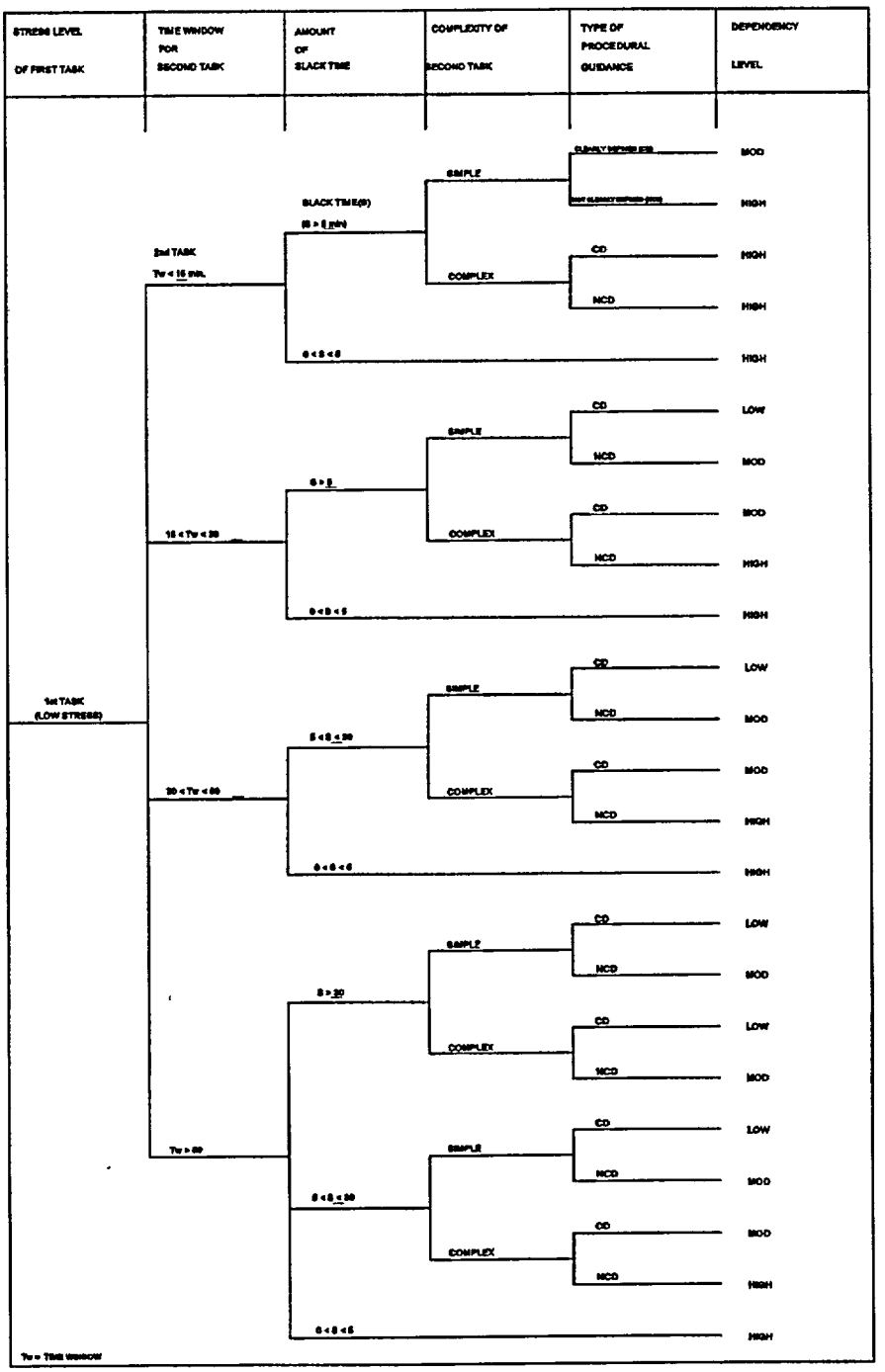

Table 30-4 (Sheet 2 of 3)

DEPENDENCY LEVEL EVALUATION

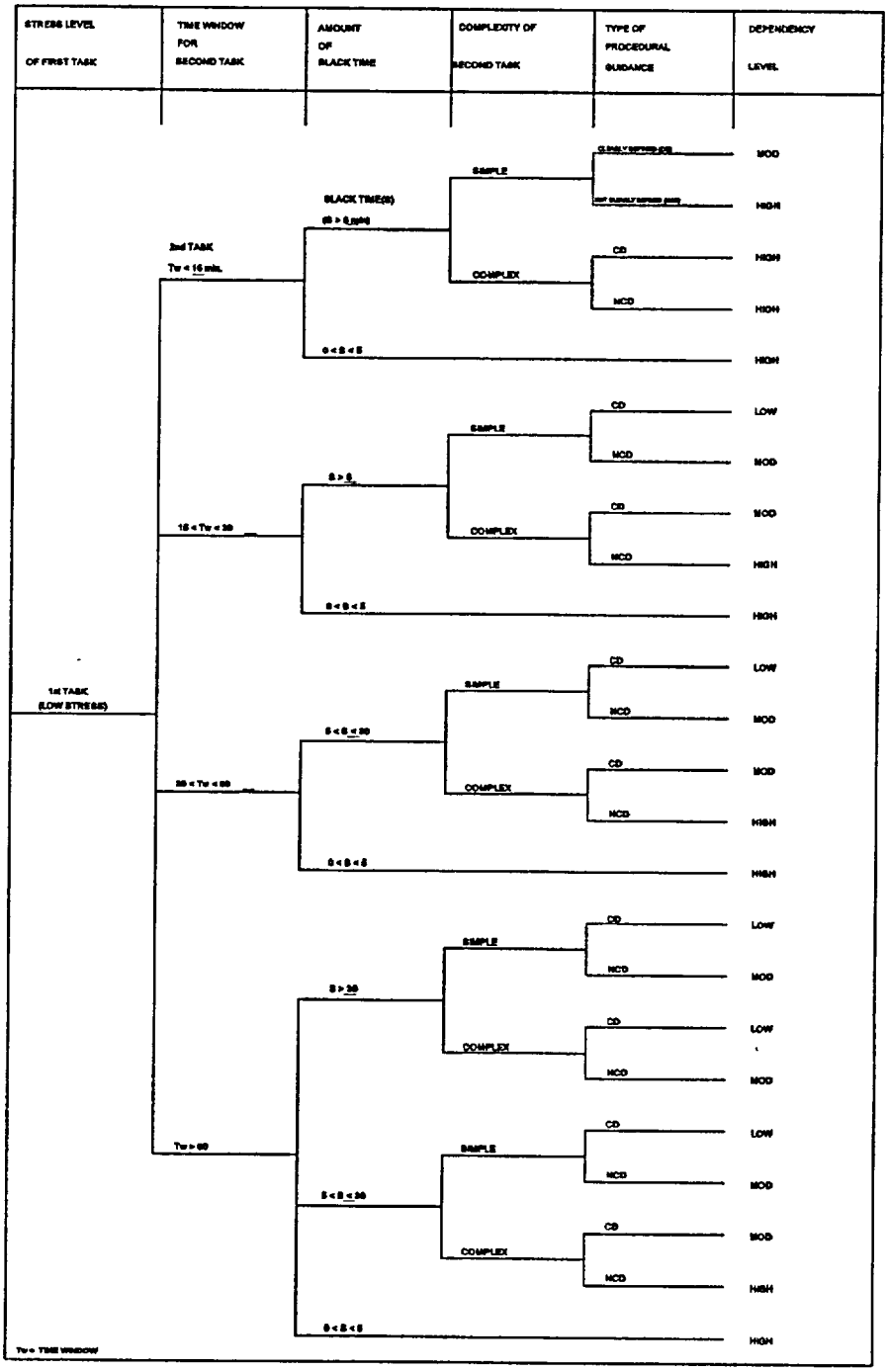

Table 30-4 (Sheet 3 of 3)

DEPENDENCY LEVEL EVALUATION

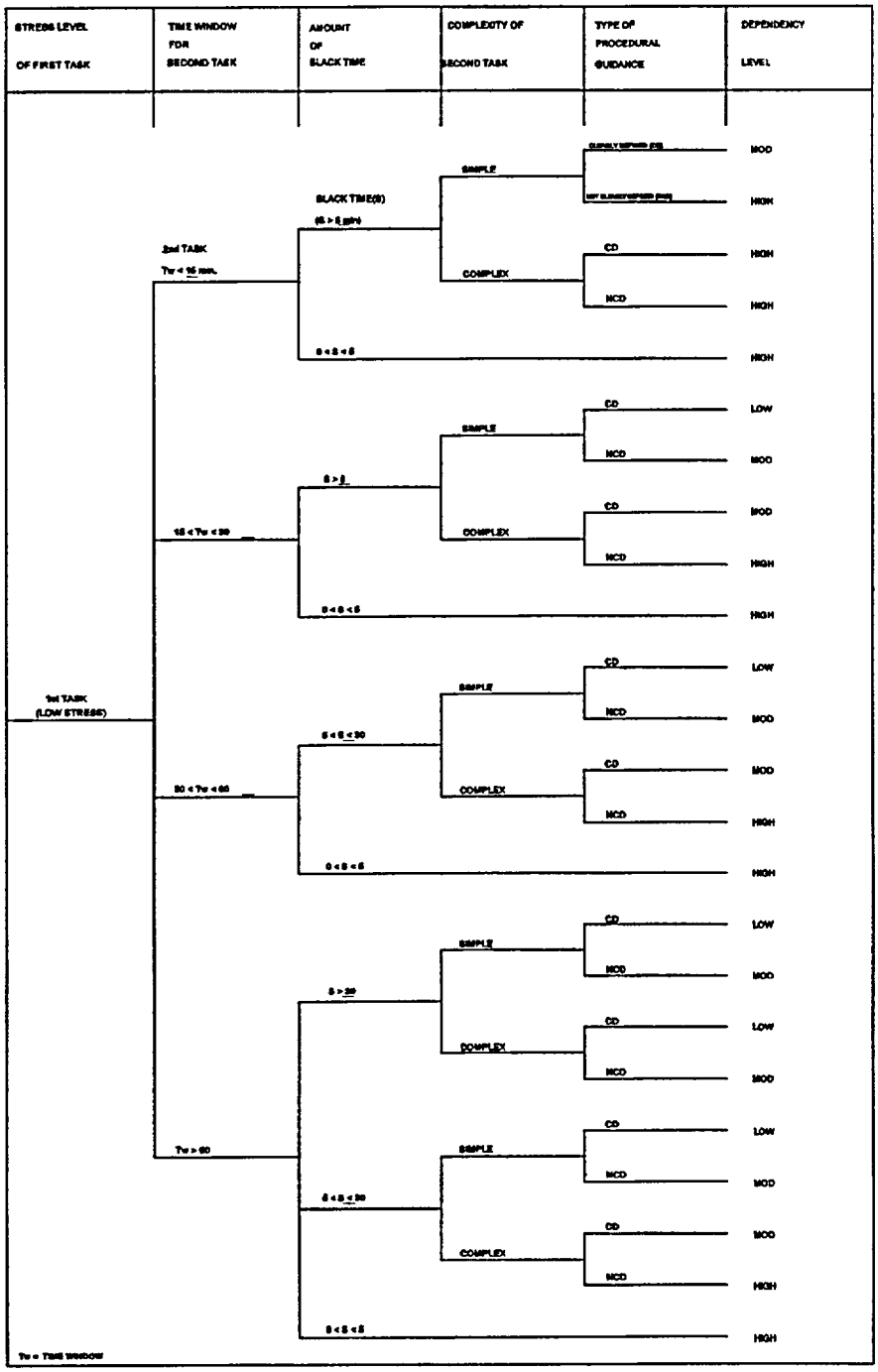

Table 30-5

LIST OF ACRONYMS

ADS	automatic depressurization system
AOV	air-operated valve
ATWS	anticipated transient without scram
BAT	boric acid tank
CMT	core makeup tank
CV	check valve
CVCS	chemical and volume control system
DAS	diverse actuation system
DG	diesel generator
EOP	emergency operating procedure
HEP	human error probability
HRA	human reliability analysis
HX	heat exchanger
IRWST	in-containment refueling water storage tank
LOCA	loss-of-coolant accident
MLOCA	medium loss-of-coolant accident
MMI	man-machine-interface
MOV	motor-operator valve
MSIV	main steam isolation valve
NRHR	normal residual heat removal
PMS	protection and safety monitoring system
PORV	power-operated relief valve
PRHR	passive residual heat removal
PSF	performance shaping factor
RCS	reactor coolant system
RHR	residual heat removal
RO	reactor operator
SFP	startup feedwater pumps
SFW	startup feedwater
SG	steam generator
SHARP	systematic human action reliability
SRO	senior reactor operator
STA	shift technical advisor
SW	service water
THERP	technique for human error rate prediction

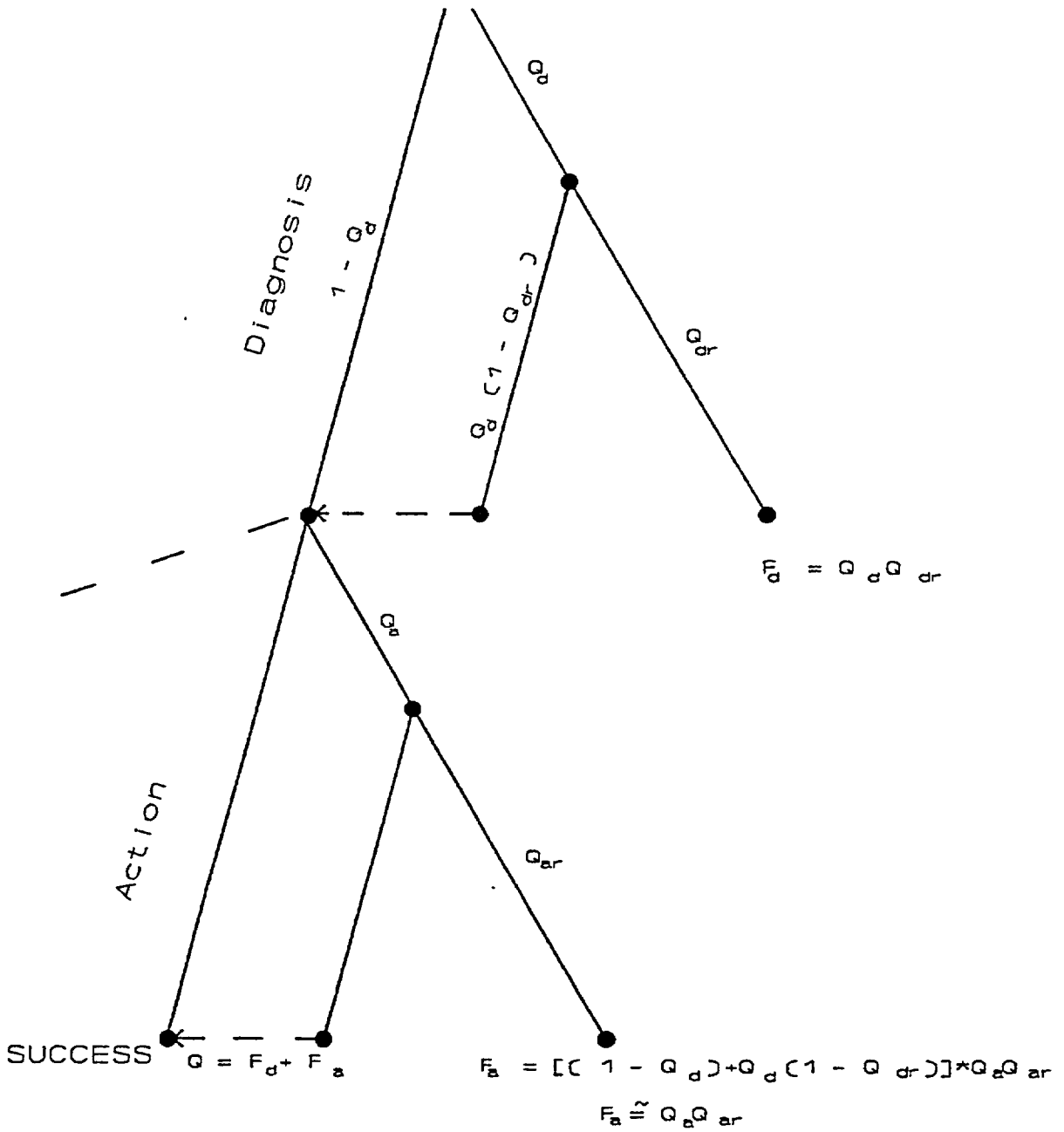

Figure 30-1

Human Reliability Analysis Quantification Model

ATTACHMENT 30A

HUMAN RELIABILITY ANALYSIS GUIDELINES

30A.1 Introduction

This attachment describes the procedure for evaluating the reliability of human actions to be performed in the PRA. The procedure incorporates the basic requirements of NUREG/CR-1278, Reference 30A-2.

Schedule and resource estimates are discussed in Section 30A.2.

The methodology used for the human reliability analysis (HRA) is described in Section 30A.3.Section 30A.4 identifies the responsibility of each analyst.

30A.2 Schedule for Human Reliability Analysis

Human reliability analysis is performed in parallel with the systems analysis after the event tree modeling is completed.The output of this task is the human reliability analysis section of the PRA report.

30A.3 Methodology

The human interactions encountered in a PRA study can essentially be categorized consistently with the Systematic Human Action Reliability Procedure (SHARP) methodology (References 30A-1 and 30A-3) in the following three types:

Type A – Pre-initiating event human interactions

Before an initiating event, plant personnel can affect availability and safety by inadvertently disabling equipment during testing or maintenance.

Type B – Initiating event-related human interactions

By committing some error, plant personnel can initiate an accident.

Type C – Post-initiating event human interactions

Two major subsets are identified as follows:

CP – By following procedures during the course of an accident, plant personnel can operate standby equipment that will terminate the accident.

CR – By improvising, plant personnel can restore and operate initially unavailable equipment to terminate an accident.

Particular cases of type C human interactions are errors of commission which have detrimental effects on the event sequences. They consist of actions that worsen the

situation due to incorrect identification of plant condition or unintentional actuation of a wrong control.

To analyze these types of human interactions, a simplification of the Systematic Human Action Reliability Procedure will be adopted.

The Systematic Human Action Reliability Procedure consists of the following seven distinct steps (see Figure 30A-1):

1. Definition of human action
2. Screening for importance
3. Task breakdown
4. Representation in relation to the systems logic models
5. Interaction between human and hardware modeling
6. Quantification
7. Documentation

For this study, the following steps are performed:

1. Definition of human action (covers SHARP step 1)
2. Screening for importance (covers SHARP steps 2 and 5)
3. Representation (covers SHARP steps 3 and 4)
4. Quantification (covers SHARP step 6)
5. Documentation (covers SHARP step 7)

An additional step consisting of the evaluation of possible dependence between human errors is performed for interaction types A and CP during the screening step.

30A.4 Responsibility

In evaluating the reliability of human actions based on this methodology, three analysts are involved:

1. System (fault tree) analyst
2. Event tree analyst
3. Human reliability analyst

Their responsibilities during the human reliability analysis are outlined in Section 30A.5 and summarized in Table 30A-1.

30A.5 Procedure for Human Interaction Evaluation

This section describes basic assumptions in evaluating the human interactions, the procedure for the evaluation of the human error probability, and the responsibility of each analyst. Table 30A-2 provides a summary of screening values, and methods of representation and quantification for each type of interaction. The Technique for Human Error Rate Prediction (THERP), described in Reference 30A-2, is used for the Human Error Probabilities (HEP) evaluation.

30A.5.1 Type A

For this type of interaction, valve misposition and other errors disabling the system after test or maintenance will be considered. This type of interaction is addressed by the system analyst. The procedure is developed in the Fault Tree Guidelines (Chapter 7).

30A.5.2 Type B

Errors involved in these interactions are due mainly to errors in following procedures (i.e., trip of a scram system channel without resetting the other during test or maintenance) or inadvertent maneuver leading to incorrect actuation or trip of systems. The procedure followed by the different analysts is outlined below:

Event Analyst

Step 1.1 – In collaboration with the system analysts, verify:

- the possibility of generating plant conditions that require reactor scram in case of spurious actuation of standby systems
- the possibility of generating plant conditions that require reactor scram in case of inadvertent trip or incorrect use of operating systems

Step 1.2 – Identify the conditions under which these errors are credible.

Step 2 – Perform a qualitative screening analysis to eliminate non-significant errors (i.e., initiator produced by failure of two independent dc busses) and justify the reason for the elimination (low probability errors, errors prevented by interlocks, etc).

Step 3.1 – Perform a breakdown of each action identified to be important and require the human error analyst to perform detailed analyses.

Step 4.3 – Take into account the final value returned by the human error analyst in the initiating event quantification task.

Human Reliability Analyst

Step 3.2 – Perform more detailed analysis of the human errors requested by the event analyst using the breakdown provided with this request. Represent the error with a THERP model, as appropriate.

Step 4.1 – For each evaluated action, prepare a table of subtasks. This table must appear in the human reliability analysis section and should contain the following information for each operator action:

- action identifier (see Chapter 7 and Table 30A-3)
- brief description of action
- applicable events
- probability of human error

Step 4.2 – Quantify the error probability using the data in Table 30A-4. Return the final values to be used in the initiating events quantification task to the event analyst.

Step 5 – Gather all documentation produced by the event analyst and all documentation produced in step 3.2 (details of representation and quantification).

30A.5.3 Type C

30A.5.3.1 Type CP

This type of interaction consists of the actuation or the trip of equipment when following procedures during an accident sequence. This error occurs when the operator does not perform the action at all or does not perform it in the allowable time. Following is the procedure for the different analysts:

Event Analyst

Step 1 – In collaboration with the system analyst, identify:

- the condition under which the manual actuation or trip of the system is possible and successful for accident termination for each initiating event
- allowable time for the action
- the effect of the error on the system and/or on the plant

Step 2.1 – Assign a screening error probability of 0.1 per demand to evaluate action.

Step 2.2 – In collaboration with the human error analyst, evaluate the possibility of dependence between actuation or trip of systems requested in the same accident sequence (e.g., cognitive error to recognize the necessity of high-pressure injection will be common to all high-pressure injection systems).

Step 2.3 – Evaluate the importance of this error considering the effect of dependencies. If this contributes to core melt frequency, then request that the human error analyst perform further evaluation.

Step 3.1 – Provide the human error analyst with the definition of the human interaction event boundary.

Step 4.4 – Introduce in the event tree quantification or provide to the system analyst (for introduction in the fault tree) final values returned by the human error analyst.

Human Reliability Analyst

Step 2.1 – In collaboration with the event analyst, evaluate the possibility of dependence between actions related to systems requested in the same accident sequence.

Step 2.4 – Verify the screening values adopted in the event tree quantification.

Step 3.2 – Perform further evaluation if the error contributes to core melt frequency, considering also the dependency effect.

Step 3.3 – Define the human interaction event boundary in collaboration with the event analyst.

Step 4.1 – Quantify the error utilizing data from Table 30A-4.

Step 4.2 – For each evaluated action, prepare a table with the same information as type B interaction (step 4.2) including the time window available for the action.

Step 4.3 – Return final values to be used in the event tree quantification to the event analyst.

Step 5 – Gather all documentation produced by the event analyst and gather all documentation produced in steps 3.2, 4.1, and 4.2 (details of the representation and quantification process).

30A.5.3.2 Type CR

This type of interaction consists essentially of actions to recover failed components. The procedure followed by the different analysts is outlined below:

Event Analyst

Step 1 – In collaboration with the system analysts, identify:

- the possibility of manual restart locally
- the possibility of system repair including consideration of access and environment
- alternate means for function success
- allowable time for carrying out repairs

Step 2 – Request a detailed breakdown of the actions in step 1, describing also the detection methods from the system analysts.

Step 3 – Perform a quantitative screening analysis using an error probability of 0.1/demand.

Step 4 – Evaluate the importance of the actions in steps 1 through 3.

Step 4.1 – Request further evaluation for action other than system repair, if it contributes to core melt frequency.

Step 4.2 – Calculate the probability of the failure to repair assuming the exponential model (using equipment mean time to repair) for system repair actions. Provide these values to the system analysts (for the cases in which recovery actions are accounted).

Step 5 – Utilize the probability values, returned by the human error and system analysts, in the event tree quantification (for the case where human intervention and recovery are considered).

System Analyst

Step 1 – Collaborate with the event analyst in identifying the possible system recovery means.

Step 2 – Perform a detailed breakdown of actions involved in step 1.

Step 3 – Quantify the system fault tree, taking into account the identified recovery.

Step 3.1 – Return the calculated system unavailability to the event analyst.

Human Reliability Analyst

Step 1 – Verify the screening values adopted by the event analyst and gather all documentation produced by the event analyst.

Step 2 – Perform further evaluation of actions found to contribute to core melt by the event analyst.

30A.5.4 Commission Errors That Have Detrimental Effects

Errors of this type consist of actions that worsen the situation due to incorrect identification of plant condition or unintentional actuation of a wrong control.

Such errors will be identified by performing a complete commission error analysis. Following is the procedure of analysis for the different analysts.

Event Analyst

Step 1 – In collaboration with the system analysts, define:

- plant parameters influenced by change in the operation status or alignment of the system (e.g., pressurizer water level and pressure, reactor coolant system pressure boundary, core reactivity, containment pressure, loss of reactor coolant pressure boundary integrity, loss of containment integrity)

- parameter variation caused by the possible human interactions (e.g., increase, decrease, etc).

This will be performed for each group of events (transients, loss of onsite power, loss-of-coolant accident, anticipated transient without scram).

Step 2.1 – Perform a qualitative analysis in collaboration with the system analysts, identifying for each event and each critical plant parameter variation the following:

- actions that can produce the critical plant parameter variation

- preventive and mitigative means consisting of the following:

  - automatic or procedural preventive measures (e.g., interlocks) or redundancies
  - automatic mitigative measures (e.g., restart of a pump on low water level)
  - manual recovery actions specifying the diagnostic means (e.g., alarm on some parameter), the timing available, and the system to be actuated

  Particular conditions (power range or event sequences) where the preventive or mitigative means are not present or are different should be identified

- consequences of the actions on the different event sequences

Step 3.1 – Require further evaluation by the human error analyst for all actions whose consequences or frequency are not negligible.

Step 4.3 – Take into account, in the final event tree quantification, the action probabilities returned by the human error analyst.

Human Reliability Analyst

Step 3.2 – Perform detailed analyses of actions found by the event analyst to worsen accident sequences. Represent with THERP methodology.

Step 4.1 – Quantify the probability of the operator interaction for type C interaction.

Step 4.2 – For each action identified to be important, prepare a table with the same information as type B interaction.

Step 5 – Gather all documentation produced by all analysts.

30A.6 Procedure for Human Error Probabilities Quantification

30A.6.1 Basic Assumptions for Human Interaction Analysis

General modification to applicable THERP nominal human error probabilities are discussed in the assumptions provided in Section 4 of the human reliability analysis notebook. Basic assumptions applied in the human reliability analysis are as follows:

- It is assumed that all the actions, including the recovery actions, are performed in the control room, with the exception of the recovery actions of the electrical system performed in the switchyard outside the control room by an additional operator (auxiliary operator), who is instructed to carry out the action by one of the control room operators, and the regulation of startup feedwater after an event of loss of compressed air. If system alignment requires operation of local valves, then such local actions will be modeled as they are identified.

- The following Performance Shaping Factors (PSFs) are assumed for the evaluation of the cognitive phases of the actions. Exceptions will be clearly stated in the specific action assumptions:

  - Operator experience: average knowledge and training
    Licensed with more than six months but less than five years experience

  - Stress level during loss-of-coolant accident, loss-of-offsite power, and anticipated transient without scram events: situation of high emergency.
    High stress with operator feeling threatened

  - Stress level during transients: situation of potential emergency
    Mild stress situation, part way through accident with high work load

  - Quality of operator/plant interface: good

- The following Stress and Experience Factors (SEF) have been adopted for the procedural action assessment:
  - Loss-of-coolant accidents, loss-of-offsite power, and anticipated transient without scram: SEF = 5 (extremely high stress level and step-by-step tasks)
  - Transients: SEF = 2 (moderately high stress level and step-by-step tasks)
  - Normal operation: SEF = 1 (low stress level)

30A.7 References

30A-1 "Systematic Human Action Reliability Procedure (SHARP)," EPRI NP-3585 Interim Report, June 1984.

30A-2 *Handbook of Human Reliability Analysis with Emphasis on Nuclear Power Plant Applications*, NUREG/CR-1278, August 1983.

30A-3 "SHARP1 - A Revised Systematic Human Action Reliability Procedure," EPRI-NP-7183-56, December 1990.

Table 30A-1

ANALYST RESPONSIBILITY BASED ON SHARP STEPS

Inter. Type	Description	System Analyst	Event Analyst	Human Reliability Analyst
1	Misposition during test or maintenance	All		
2	Errors causing initiators	D	D, S	R, Q, Do
3	Actuation/trip of systems terminating the accident	D	D, S_q, De	S_q, R, Q, Do, De
4	Errors aggravating the accident (errors of commission)	D, S	D, S	R, Q, Do
5	Recovery of equipment that terminates the accident	D	D, S_q	S_q, R , Q, Do

Notes:
D = Definition
S = Screening (qualitative)
S_q = Screening (quantitative)
R = Representation
Q = Quantification
De = Dependence
Do = Documentation

Table 30A-2

SUMMARY OF SCREENING VALUES

HI Type	Description	Screening Analysis Value	Representation	Quantification
A	Misposition during test or maintenance	Qualitative	—	Fault Tree Guideline
	Other system disabling errors	0.1/demand	THERP	Table 30A-4 (Ref. 30-2, Chap. 20 Tables)
	Errors causing initiators	Qualitative	THERP	Table 30A-4 (Ref. 30-2, Chap. 20 Tables)
CP	Actuation/trip of systems terminating the accident	0.1/demand	THERP	Table 30A-4 (Ref. 30-2, Chap. 20 Tables)
CR	Recovery of equipment that terminates the accident			
	a. recovery	0.1/demand	THERP	Table 30A-4 (Ref. 30-2, Chap. 20 Tables)
	b. repair	1.0	Exponential model	Calculation
	Errors aggravating the accident (errors of commission)	Qualitative	THERP	Table 30A-4 (Ref. 30-2, Chap. 20 Tables)

Table 30A-3

EXAMPLE OF OPERATOR ACTION DEFINITION

Action Identifier	Actions Required	Time[1] Window	Event	Probability
SSN-MAN YYY	Operator error in YYY actuating system SS		Event 1 • • • Event i	Value 1 • • • Value i
SST-MAN YYY	Operator error in YYY actuating train T of system SS		Event 1 • • • Event i	Value 1 • • • Value i
SSS-COM YY	Operator error number YY on system/component SSS		Event 1 • • •	Value 1 • • •

Note:
1. Applicable only to type C interaction

Table 30A-4 (Sheet 1 of 5)

HEP DATA BANK

No.	HEP Description	HEP (Mean)	Source THERP Table (Item)
Failure of Administrative Control			
1	Carry out a plant policy or scheduled tasks such as periodic tests or maintenance performed weekly, monthly, or at long intervals	1.6E-02	20-6 (1)
2	Initiate a scheduled shift checking or inspection function	1.3E-03	20-6 (2)
Use Written Operations Procedures Under			
3	Normal operating conditions	1.3E-02	20-6 (3)
4	Abnormal operating conditions	1.3E-02	20-6 (4)
5	Use written test or calibration procedures	8.1E-02	20-6 (6)
6*	Use written maintenance procedures	3.9E-01	20-6 (7)
7*	Use a checklist properly	5.5E-01	20-6 (8)
Errors of Omission			
When procedures with checkoff provisions are used correctly			
8	Short list, < 10 items	1.3E-03	20-7 (1)
9	Long list, > 10 items	3.8E-03	20-7 (2)
When procedures without checkoff provisions are used or when checkoff provisions are used incorrectly			
10	Short list, < 10 items	3.8E-03	20-7 (3)
11	Long list, > 10 items	1.3E-02	20-7 (4)
12	When written procedures are available and should be used, but are not	8.1E-02	20-7 (5)
13	Same as item 12, but is judged to be a "second nature"	1.6E-02	20-7 (5)
Errors in Selecting Unannunciated Displays			
Select wrong displays			
14	From similar-appearing displays when they are on a panel with clearly drawn mimic lines that include the displays	1.3E-03	20-9 (2)

Table 30A-4 (Sheet 2 of 5)

HEP DATA BANK

No.	HEP Description	HEP (Mean)	Source THERP Table (Item)
15	From similar-appearing displays that are part of well-delineated functional groups on a panel	1.2E-03	20-9 (3)
16	From an array of similar-appearing displays identified by labels only	3.7E-03	20-9 (4)
Errors in Reading/Recording Displays			
17	Analog meter	3.7E-03	30-10 (1)
18	Digital readout (< 4 digits)	1.2E-03	20-10 (2)
19	Chart recorder	7.5E-03	20-10 (3)
20	Printing recorder with large number of parameters	8.1E-02	20-10 (4)
21	Graphs	1.2E-02	20-10 (5)
22	Valves from indicator lamps used as quantitative displays	1.2E-03	20-10 (6)
23	Recognize that an instrument being read is jammed if there are no indicators to alert the user	1.6E-01	20-10 (7)
Errors in Check-Reading Displays			
24	Digital displays	1.2E-03	20-11 (1)
25	Analog meters		
	a. With easily seen limit marks	1.2E-03	20-11 (2)
	b. With difficult-to-see limit marks, such as scribe lines	2.5E-03	20-11 (3)
	c. Without limit marks	3.7E-03	20-11 (4)
26	Analog - type chart recorders		
	a. With limit remarks	2.5E-03	20-11 (5)
	b. Without limit remarks	7.5E-03	20-11 (6)

Table 30A-4 (Sheet 3 of 5)

HEP DATA BANK

No.	HEP Description	HEP (Mean)	Source THERP Table (Item)
Errors of Commission			
Select wrong control from an array of similar-appearing controls			
27	Identified by labels only	3.7E-03	20-12 (2)
28	From a functionally grouped set of controls	1.2E-03	20-12 (3)
29	From a panel with clearly drawn mimic lines	1.3E-03	20-12 (4)
Turn control in wrong direction			
30	When there is no violation of populational stereotypes	1.2E-03	20-12 (5)
31	When design violates a strong populational stereotype and operating conditions are normal	8.1E-02	20-12 (6)
32	When design violates a strong populational stereotype and operation is under high stress	5.5E-01	20-12 (7)
33	Turn a two-position switch in the wrong direction; no violation of populational stereotypes	2.7E-04	20-12 (8)
34	Set a multiposition selector switch to an incorrect setting (This error is a function of the clarity with which indicator position can be determined. Designs of switch knobs and their position indications vary greatly.)	2.7E-03	20-12 (9)
35	Failure to complete change of state of a component if switch must be held until change is completed	3.8E-03	20-12 (10)
36	Select wrong circuit breaker in a group of circuit breakers	6.2E-03	20-12 (11)
37	Improperly mate a connector (this includes failures to seat connectors completely and failure to test locking features of connectors for engagement)	3.8E-03	20-12 (12)
Checker Fails to Detect Error			
38	Checking routine tasks, checker using written materials (includes over-the-shoulder inspections)	1.6E-01	20-22 (1)
39	Same as above but without written materials	3.2E-01	20-22 (2)

Table 30A-4 (Sheet 4 of 5)

HEP DATA BANK

No.	HEP Description	HEP (Mean)	Source THERP Table (Item)
40	Special short-term, one-of-a-kind checking with alerting factors	8.1E-02	20-22 (3)
41	Checking that involves active participation, such as special measurements	1.6E-02	20-22 (4)
42*	Given that the position of a locally operated valve is checked (item 38), checking that it is completely opened or closed after being changed or restored	5.5E-01	20-22 (4)
43*	Checking by reader/checker of the task performer in a two-man team, or checking by a second checker, routine task (no credit for more than two checkers)	5.5E-01	20-22 (8)
44	Checking of status of equipment if that status affects one's safety when performing the tasks	1.6E-03	20-22 (9)
45	An operator checks change or restoration tasks performed by a maintainer	Divide HEP in item 44 by two	20-22 (10)
Fail to Respond to One of Many Annunciators Alarming Closely in Time			
46	One annunciator alarming	2.7E-0-4	20-23 (1)
47	Two annunciators alarming	1.6E-03	20-23 (2)
48	Three annunciators alarming	2.7E-03	20-23 (3)
49	Four annunciators alarming	5.3E-03	20-23 (4)
50	Five annunciators alarming	8.0E-03	20-23 (5)
51	Six annunciators alarming	1.3E-02	20-23 (6)
52	Seven to ten annunciators alarming	1.3E-01	20-23 (10)
53	More than ten annunciators alarming	3.6E-01	20-23 (11)
Failure to Respond to an Annunciated Legend Light			
54	Resume attention to a legend light in one minute after an interruption (sound and blinking cancelled before interruption)	1.3E-03	20-24 (2)

Table 30A-4 (Sheet 5 of 5)

HEP DATA BANK

No.	HEP Description	HEP (Mean)	Source THERP Table (Item)
55	Resume attention to a legend light if more than one minute elapses after an interruption (sound and blinking cancelled before interruption)	1.0	20-24 (3)
56	Respond to a steady-on legend light during initial audit	1.0	20-24 (4)
57	Respond to a steady-on legend light during other hourly scans	1.0	20-24 (5)
58**	Failure is assured to occur due to circumstances	1.0	EJ
59**	Failure probability is not known, but failure is NOT assured	0.5	EJ
60**	Failure is high, error prone situations	0.1	EJ
61**	Failure is small, but not likely	0.01-0-4	EJ
62**	Failure is small, expected in normal human activities	1.0E-03	EJ
63**	Failure is small, but is less than that expected in normal human activities	1.0E-04	EJ
63**	Failure is deemed to be negligibly small, highly unlikely	1.0E-05	EJ
64**	Failure is deemed to be negligibly small, highly unlikely	1.0E-05	EJ

Notes:

1. Items followed by "*" signify that the median THERP HEP is used. It is meaningless converting high median values (e.g., medians approximating or greater than 4.0E-01) to means.
2. Items followed by "**" signify that HEPs are derived from engineering judgment.
3. These are nominal mean HEPs which must be multiplied by the multiplicative factors to adjust for the influence factors to obtain situation-specific HEPs.

Basis for Data Values

Three reference points are used to generate the HEPs based on engineering judgment. The other points are assigned by interpolation.

a. The failure probability of an event assured to occur is 1.0. This value is reserved for this type of event only; otherwise, use items 59 through 64.
b. An inspection of the HEP data bank indicates that HEPs for omission or commission for typical actions without compromising circumstances are at the order of 1 E-03 (e.g., items 2, 8, 18, 28). Therefore, this value is chosen as the representative of a failure probability expected in normal human activities. This is used in item 62.
c. An inspection of the HEP data bank indicates that the lowest observed HEPs are at the order of 1 E-05. This is assigned as the value of failure probability, deemed to be negligibly small. Note that this compares well with the probability associated with acts of God, at the order of 1 E-06 and 1 E-07 (e.g., per person risk of death from lightning).

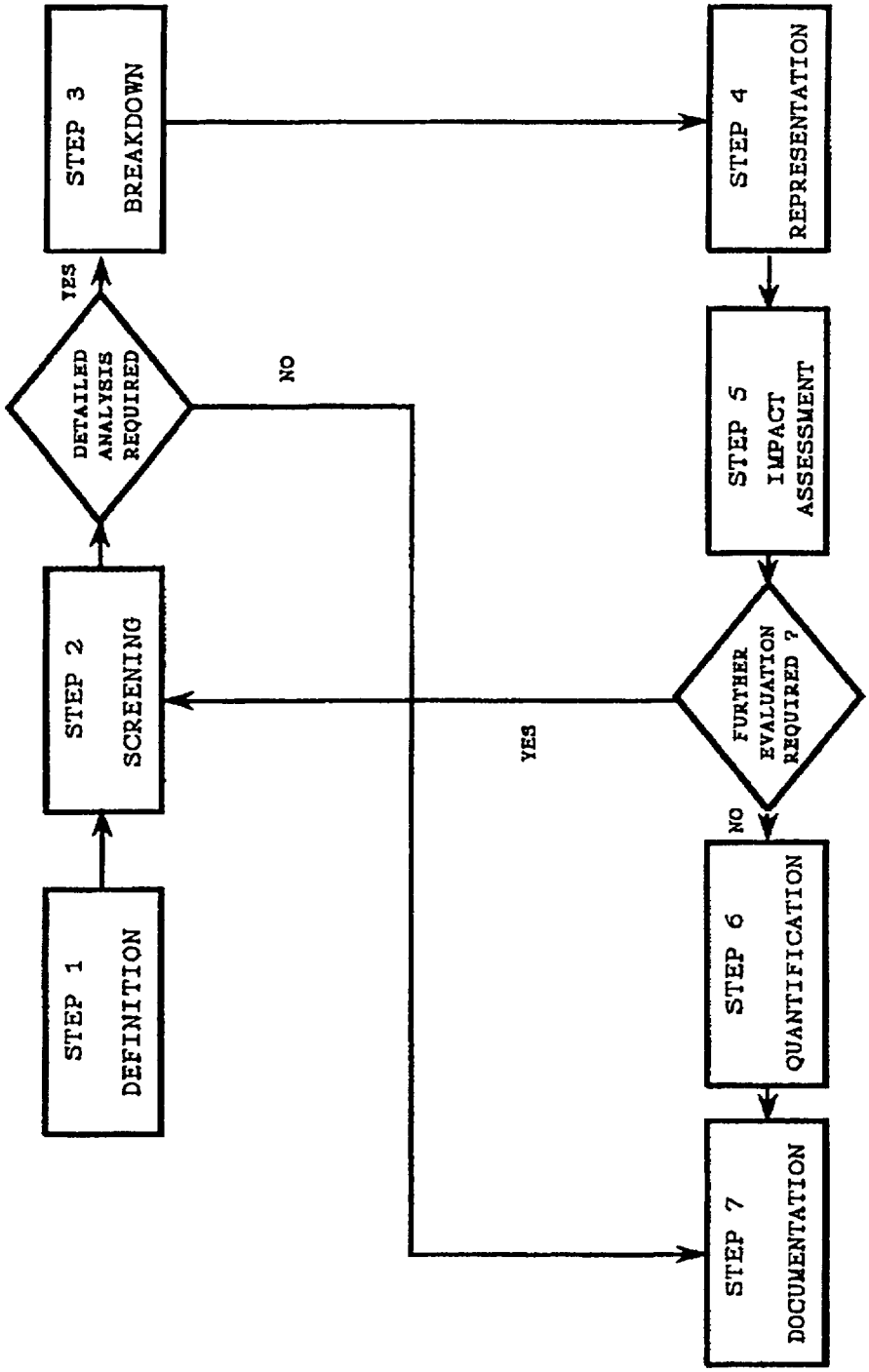

Figure 30A-1

Links Between SHARP Steps

TABLE OF CONTENTS

Section	Title	Page
	LIST OF TABLES	xxxv
	LIST OF FIGURES	liii
	REVISION 1 CHANGE ROADMAP	ci
CHAPTER 1	INTRODUCTION	
1.1	Introduction	1-1
1.1.1	Background and Overview	1-1
1.1.2	Objectives	1-1
1.1.3	Technical Scope	1-2
1.1.4	Project Methodology Overview	1-3
1.1.5	Results	1-4
1.1.6	Plant Definition	1-6
1.1.7	References	1-6
CHAPTER 2	INTERNAL INITIATING EVENTS	
2.1	Introduction	2-1
2.2	Internal Initiating Event Identification and Categorization	2-1
2.2.1	Logic Diagram for Internal Initiating Events	2-2
2.2.2	Loss-of-Coolant Accidents	2-3
2.2.3	Transients	2-6
2.2.4	Anticipated Transient without Scram	2-8
2.2.5	AP1000 Specific Initiating Event Analysis	2-10
2.2.6	Consequential Events	2-19
2.2.7	Summary of Internal Initiating Event Categories	2-19
2.3	Internal Initiating Event Frequency Quantification	2-20
2.3.1	Quantification of LOCA Initiating Event Frequencies	2-20
2.3.2	Quantification of Transient Initiating Event Frequencies	2-24
2.3.3	ATWS Precursor Initiating Event Frequency	2-27
2.3.4	Summary of Internal Initiating Event Frequencies	2-27
2.4	References	2-27
ATTACHMENT 2A	QUANTIFICATION OF LOCA INITIATING EVENT FREQUENCIES	
2A-1	Primary System Pipe Break Frequencies	2A-1
2A-2	Reactor Cooling System Leakage Initiating Event Frequency	2A-1
2A-3	Steam Generator Tube Rupture Initiating Event Frequency	2A-1
2A-4	Quantification of Stuck-Open Pressurizer Safety Valve, Accumulator Interface Break, and IRWST Interface Break	2A-1
2A-5	Initiating Events Review Data Summary and INPO Data	2A-1
ATTACHMENT 2B	QUANTIFICATION OF TRANSIENT INITIATING EVENT FREQUENCIES	
2B-1	Secondary Side Line Breaks & Stuck-open Main Steam Line Safety Valve Frequencies	2B-1

TABLE OF CONTENTS (cont.)

Section	Title	Page
CHAPTER 3	MODELING OF SPECIAL INITIATORS	
3.1	Introduction	3-1
3.2	Ground Rules for Special Initiating Event Analysis	3-1
3.3	Loss of Component Cooling Water System/Service Water System Initiating Event	3-1
3.4	Loss of Compressed and Instrument Air System Initiating Event	3-2
3.5	Spurious Actuation of Automatic Depressurization System	3-2
	3.5.1 Evaluation of Automatic Depressurization System Spurious Actuation	3-3
CHAPTER 4	EVENT TREE MODELS	
4.1	Introduction	4-1
4.2	Large LOCA Event Tree Model	4-1
	4.2.1 Event Description	4-1
	4.2.2 Event Tree Model and its Nodes	4-2
	4.2.3 Event Tree Success Criteria and Core Damage Categories	4-4
	4.2.4 Operator Actions	4-4
	4.2.5 Transfers and Consequential Events	4-4
4.3	Large Spurious ADS Event Tree Model	4-4
	4.3.1 Event Description	4-4
	4.3.2 Event Tree Model and its Nodes	4-4
	4.3.3 Event Tree Success Criteria and Core Damage Categories	4-6
	4.3.4 Operator Actions	4-6
	4.3.5 Transfers and Consequential Events	4-6
4.4	Medium LOCA Event Tree Model	4-6
	4.4.1 Event Description	4-6
	4.4.2 Event Tree Model and its Nodes	4-7
	4.4.3 Event Tree Success Criteria and Core Damage Categories	4-9
	4.4.4 Operator Actions	4-9
	4.4.5 Transfers and Consequential Events	4-10
4.5	Core Makeup Tank Line Break Event Tree Model	4-10
	4.5.1 Event Description	4-10
	4.5.2 Event Tree Model and its Nodes	4-10
	4.5.3 Event Tree Success Criteria and Core Damage Categories	4-13
	4.5.4 Operator Actions	4-13
	4.5.5 Transfers and Consequential Events	4-13
4.6	Safety Injection Line Break Event Tree Model	4-13
	4.6.1 Event Description	4-13
	4.6.2 Event Tree Model and its Nodes	4-14
	4.6.3 Event Tree Success Criteria and Core Damage Categories	4-16
	4.6.4 Operator Actions	4-16
	4.6.5 Transfers and Consequential Events	4-17

TABLE OF CONTENTS (cont.)

Section	Title	Page
4.7	Small LOCA Event Tree Model	4-17
4.7.1	Event Description	4-17
4.7.2	Event Tree Model and its Nodes	4-17
4.7.3	Event Tree Success Criteria and Core Damage Categories	4-20
4.7.4	Operator Actions	4-20
4.7.5	Transfers and Consequential Events	4-21
4.8	RCS Leak Event Tree Model	4-21
4.8.1	Event Description	4-21
4.8.2	Event Tree Model and its Nodes	4-21
4.8.3	Event Tree Success Criteria	4-22
4.8.4	Operator Actions	4-22
4.8.5	Transfers and Consequential Events	4-22
4.8.6	Core Damage Categories	4-23
4.9	PRHR Tube Rupture Event Tree Model	4-23
4.9.1	Event Description	4-23
4.9.2	Event Tree Model and its Nodes	4-23
4.9.3	Event Tree Success Criteria	4-24
4.9.4	Operator Actions	4-24
4.9.5	Transfers and Consequential Events	4-24
4.9.6	Core Damage Categories	4-24
4.10	Steam Generator Tube Rupture Event Tree Model	4-25
4.10.1	Event Description	4-25
4.10.2	Event Tree Model and its Nodes	4-27
4.10.3	Event Tree Success Criteria and Core Damage Categories	4-33
4.10.4	Operator Actions	4-33
4.10.5	Transfers and Consequential Events	4-33
4.11	Reactor Vessel Rupture Event Tree Model	4-34
4.11.1	Event Description	4-34
4.11.2	Event Tree Model and its Nodes	4-34
4.11.3	Event Tree Success Criteria	4-34
4.11.4	Operator Actions	4-34
4.11.5	Transfers and Consequential Events	4-34
4.11.6	Core Damage Categories	4-34
4.12	Interfacing System LOCA Event Tree Model	4-34
4.12.1	Event Description	4-34
4.12.2	Event Tree Model and its Nodes	4-35
4.12.3	Event Tree Success Criteria	4-35
4.12.4	Operator Actions	4-35
4.12.5	Transfers and Consequential Events	4-35
4.12.6	Core Damage Categories	4-35

TABLE OF CONTENTS (cont.)

Section	Title	Page
4.13	Transients With MFW Event Tree Model	4-35
4.13.1	Event Description	4-35
4.13.2	Event Tree Model and its Nodes	4-37
4.13.3	Event Tree Success Criteria and Core Damage Categories	4-41
4.13.4	Operator Actions	4-41
4.13.5	Transfers and Consequential Events	4-42
4.14	Transients With Loss of RCS Flow Event Tree Model	4-42
4.14.1	Event Description	4-42
4.14.2	Event Tree Model and its Nodes	4-42
4.14.3	Event Tree Success Criteria and Core Damage Categories	4-46
4.14.4	Operator Actions	4-46
4.14.5	Transfers and Consequential Events	4-46
4.15	Transients With Loss of MFW to One Steam Generator Event Tree Model	4-46
4.15.1	Event Description	4-46
4.15.2	Event Tree Model and its Nodes	4-47
4.15.3	Event Tree Success Criteria and Core Damage Categories	4-50
4.15.4	Operator Actions	4-50
4.15.5	Transfers and Consequential Events	4-51
4.16	Transients With Core Power Excursion Event Tree Model	4-51
4.16.1	Event Description	4-51
4.16.2	Event Tree Model and its Nodes	4-51
4.16.3	Event Tree Success Criteria and Core Damage Categories	4-55
4.16.4	Operator Actions	4-55
4.16.5	Transfers and Consequential Events	4-55
4.17	Transients With Loss of CCW/SW Event Tree Model	4-56
4.17.1	Event Description	4-56
4.17.2	Event Tree Model and its Nodes	4-56
4.17.3	Event Tree Success Criteria and Core Damage Categories	4-59
4.17.4	Operator Actions	4-59
4.17.5	Transfers and Consequential Events	4-60
4.18	Loss of Main Feedwater Event Tree Model	4-60
4.18.1	Event Description	4-60
4.18.2	Event Tree Model and its Nodes	4-62
4.18.3	Event Tree Success Criteria and Core Damage Categories	4-65
4.18.4	Operator Actions	4-65
4.18.5	Transfers and Consequential Events	4-66
4.19	Loss of Condenser Event Tree Model	4-66
4.19.1	Event Description	4-66
4.19.2	Event Tree Model and its Nodes	4-66
4.19.3	Event Tree Success Criteria and Core Damage Categories	4-70
4.19.4	Operator Actions	4-70
4.19.5	Transfers and Consequential Events	4-70

TABLE OF CONTENTS (cont.)

Section	Title	Page
4.20	Loss of Compressed Air Event Tree Model	4-70
4.20.1	Event Description	4-70
4.20.2	Event Tree Model and its Nodes	4-71
4.20.3	Event Tree Success Criteria and Core Damage Categories	4-74
4.20.4	Operator Actions	4-74
4.20.5	Transfers and Consequential Events	4-75
4.21	Loss of Offsite Power Event Tree Model	4-75
4.21.1	Event Description	4-75
4.21.2	Event Tree Model and its Nodes	4-75
4.21.3	Event Tree Success Criteria and Core Damage Categories	4-79
4.21.4	Operator Actions	4-79
4.21.5	Transfers and Consequential Events	4-80
4.22	Main Steam Line Break Downstream of MSIVs Event Tree Model	4-80
4.22.1	Event Description	4-80
4.22.2	Event Tree Model and its Nodes	4-81
4.22.3	Event Tree Success Criteria and Core Damage Categories	4-84
4.22.4	Operator Actions	4-84
4.22.5	Transfers and Consequential Events	4-85
4.23	Main Steam Line Break Upstream of MSIVs Event Tree Model	4-85
4.23.1	Event Description	4-85
4.23.2	Event Tree Model and its Nodes	4-85
4.23.3	Event Tree Success Criteria and Core Damage Categories	4-89
4.23.4	Operator Actions	4-89
4.23.5	Transfers and Consequential Events	4-90
4.24	Stuck-Open Secondary Side Safety Valve Event Tree Model	4-90
4.24.1	Event Description	4-90
4.24.2	Event Tree Model and its Nodes	4-91
4.24.3	Event Tree Success Criteria and Core Damage Categories	4-94
4.24.4	Operator Actions	4-94
4.24.5	Transfers and Consequential Events	4-94
4.25	ATWS Precursors Without MFW Event Tree Model	4-95
4.25.1	Event Description	4-95
4.25.2	Event Tree Model and its Nodes	4-96
4.25.3	Event Tree Success Criteria and Core Damage Categories	4-101
4.25.4	Operator Actions	4-101
4.25.5	Transfers and Consequential Events	4-101
4.26	ATWS Precursor with SI Event Tree Model	4-101
4.26.1	Event Description	4-101
4.26.2	Event Tree Model and its Nodes	4-102
4.26.3	Event Tree Success Criteria and Core Damage Categories	4-106
4.26.4	Operator Actions	4-106
4.26.5	Transfers and Consequential Events	4-106

TABLE OF CONTENTS (cont.)

Section	Title	Page
4.27	ATWS Precursor Transients with MFW Event Tree Model	4-106
4.27.1	Event Description	4-106
4.27.2	Event Tree Model and its Nodes	4-107
4.27.3	Event Tree Success Criteria and Core Damage Categories	4-110
4.27.4	Operator Actions	4-111
4.27.5	Transfers and Consequential Events	4-111
ATTACHMENT 4A	EVENT TREE GUIDELINES	
4A.1	Event Tree Analysis Methodology	4A-1
4A.2	Event Tree Guidelines for Core Damage	4A-3
4A.2.1	Event Trees	4A-3
4A.2.2	Success Criteria	4A-6
4A.2.3	Definition of End States	4A-7
4A.2.4	Plant Response Functions	4A-9
4A.2.5	Event Tree Node Notation	4A-13
4A.2.6	Consequential Events	4A-13
4A.2.7	Transient Template	4A-14
4A.2.8	Small LOCA Template	4A-15
ATTACHMENT 4B	EVENT TREE PICTURES	4B-1
CHAPTER 5	SUPPORT SYSTEMS	
5.1	Introduction	5-1
5.2	Support Systems and Their Interdependencies	5-1
5.3	Front Line Systems and Their Dependencies	5-1
CHAPTER 6	SUCCESS CRITERIA ANALYSIS	
6.1	Introduction	6-1
6.2	Acceptance Criteria and Critical Functions for Success Criteria	6-1
6.3	Event Sequences and Timing, Passive/Active System Interactions	6-3
6.3.1	General Sequence Success Criteria	6-3
6.3.2	Timing of Events and Key Operator Actions	6-9
6.3.3	Passive/Active System Interactions	6-15
6.3.4	Sequence Success Criteria Summary	6-18
6.4	Event Tree Top Events Success Criteria	6-18
6.5	References	6-19
CHAPTER 7	FAULT TREE GUIDELINES	
7.1	Purpose	7-1
7.2	Fault Tree Development	7-1
7.2.1	Procedural Steps for Fault Tree Preparation	7-1
7.2.2	Procedural Steps for Fault Tree Construction	7-2

TABLE OF CONTENTS (cont.)

Section	Title	Page
7.3	Primary Events to be Considered in Fault Trees	7-3
	7.3.1 Random Component Failure	7-3
	7.3.2 Outage for Maintenance and Testing	7-5
	7.3.3 Common Cause Failures	7-6
	7.3.4 Human Errors	7-6
	7.3.5 Power and Control Model	7-9
7.4	Data Base	7-10
7.5	Fault Tree Model: Identification Codes	7-10
	7.5.1 Identification Code for Fault Tree Names	7-10
	7.5.2 Identification Code for Support Systems	7-10
	7.5.3 Identification Code for Primary Event Names	7-11
	7.5.4 Identification Code for Common Cause Failures	7-11
	7.5.5 Identification Code for Undeveloped Events (Modules)	7-12
	7.5.6 Identification Code for Operator Errors	7-13
7.6	Fault Tree Quantification	7-13
7.7	References	7-14
CHAPTER 8	PASSIVE CORE COOLING SYSTEM – PASSIVE RESIDUAL HEAT REMOVAL	
8.1	System Function	8-1
8.2	System Description	8-1
	8.2.1 Support Systems	8-1
	8.2.2 Instrumentation and Control	8-2
	8.2.3 Test and Maintenance	8-2
8.3	System Operation	8-3
8.4	Performance During Accident Conditions	8-3
	8.4.1 Plant Shutdown	8-3
	8.4.2 Loss of Coolant Accidents	8-3
	8.4.3 Passive Residual Heat Removal Heat Exchanger Tube Rupture	8-3
8.5	Initiating Events Review	8-4
	8.5.1 Initiating Events Impacting the PRHR System	8-4
	8.5.2 Initiating Events Caused by PRHR System Malfunction	8-4
8.6	System Logic Models	8-4
	8.6.1 Assumptions and Boundary Conditions	8-5
	8.6.2 Fault Tree Models	8-6
	8.6.3 Human Interactions	8-6
	8.6.4 Common Cause Failures	8-6
8.7	Quantification and Results	8-6

TABLE OF CONTENTS (cont.)

Section	Title	Page
CHAPTER 9	PASSIVE CORE COOLING SYSTEM – CORE MAKEUP TANK	
9.1	System Description	9-1
9.1.1	Support Systems	9-1
9.1.2	Instrumentation and Control	9-1
9.1.3	Test and Maintenance Assumptions	9-2
9.2	System Operation	9-2
9.3	Performance During Accident Conditions	9-3
9.3.1	Inadvertent Opening of a Steam Generator Relief or Safety Valve	9-3
9.3.2	Steam Line Break	9-3
9.3.3	Steam Generator Tube Rupture	9-3
9.3.4	Reactor Coolant System Heatup Transients	9-4
9.3.5	Loss-of-Coolant Accidents	9-4
9.3.6	Loss of Offsite Power	9-4
9.3.7	Anticipated Transient without Trip	9-4
9.4	Initiating Event Review	9-4
9.4.1	Initiating Events Impacting the Core Makeup Tank Subsystem	9-5
9.4.2	Initiating Events Due to Loss of the Core Makeup Tank Subsystem	9-5
9.5	System Logic Models	9-5
9.5.1	Assumptions and Boundary Conditions	9-5
9.5.2	Fault Tree Models	9-7
9.5.3	Human Interactions	9-7
9.5.4	Common Cause Failures	9-8
CHAPTER 10	PASSIVE CORE COOLING SYSTEM – ACCUMULATOR	
10.1	System Description	10-1
10.1.1	Support Systems	10-1
10.1.2	Instrumentation and Control	10-1
10.1.3	Test and Maintenance Assumptions	10-1
10.2	System Operation	10-1
10.3	Performance During Accident Conditions	10-2
10.3.1	Steam Line Break	10-2
10.3.2	Loss-of-Coolant Accidents or Non-Loss-of-Coolant Accidents with Automatic Depressurization System	10-2
10.4	Initiating Event Review	10-3
10.4.1	Initiating Events Impacting the Accumulator Subsystem	10-3
10.4.2	Initiating Events Due to Loss of the Accumulator Subsystem	10-3
10.5	System Logic Models	10-3
10.5.1	Assumptions and Boundary Conditions	10-3
10.5.2	Fault Tree Models	10-4
10.5.3	Human Interactions	10-4
10.5.4	Common Cause Failures	10-4

TABLE OF CONTENTS (cont.)

Section	Title	Page
CHAPTER 11	PASSIVE COOLING SYSTEM – AUTOMATIC DEPRESSURIZATION SYSTEM	
11.1	System Function	11-1
11.2	System Description	11-1
11.2.1	Support Systems	11-1
11.2.2	Instrumentation and Control	11-2
11.2.3	Test and Maintenance	11-2
11.3	System Operation	11-2
11.4	Performance During Accident Conditions	11-3
11.4.1	Loss of Coolant Accidents	11-3
11.4.2	Transients	11-3
11.5	Initiating Events Review	11-3
11.5.1	Initiating Events Impacting the Automatic Depressurization System	11-3
11.5.2	Initiating Events Caused by the ADS Malfunction	11-4
11.6	System Logic Model	11-4
11.6.1	Assumptions and Boundary Conditions	11-4
11.6.2	Fault Tree Models	11-5
11.6.3	Human Interactions	11-6
11.6.4	Common Cause Failures	11-7
11.7	Quantification and Results	11-7
CHAPTER 12	PASSIVE CORE COOLING SYSTEM – IN-CONTAINMENT REFUELING WATER STORAGE TANK	
12.1	System Function	12-1
12.2	System Description	12-1
12.2.1	Support Systems	12-1
12.2.2	Instrumentation and Control	12-1
12.2.3	Test and Maintenance	12-2
12.3	System Operation	12-2
12.4	Performance During Accident Conditions	12-2
12.4.1	Transients	12-3
12.4.2	Loss of Coolant Accidents	12-4
12.4.3	In-Vessel Core Damage Mitigation	12-5
12.4.4	Containment Isolation System Failure	12-5
12.5	Initiating Event	12-5
12.5.1	Initiating Event Impacting IRWST/Gravity Injection Subsystem	12-5
12.5.2	Initiating Event due to Loss of IRWST/Gravity Injection Subsystem	12-5
12.6	System Logic Models	12-6
12.6.1	Assumptions and Boundary Conditions	12-6
12.6.2	Fault Tree Models	12-8
12.6.3	Human Interactions	12-8
12.6.4	Common Cause Failures	12-8
12.7	Quantification and Results	12-9

TABLE OF CONTENTS (cont.)

Section	Title	Page
CHAPTER 13	PASSIVE CONTAINMENT COOLING SYSTEM	
13.1	System Description	13-1
13.1.1	Support Systems	13-1
13.1.2	Instrumentation and Control	13-1
13.1.3	Test and Maintenance Assumptions	13-2
13.2	System Operation	13-2
13.3	Performance During Accident Conditions	13-2
13.3.1	Post-Reactor Trip with Loss of All ac Power	13-2
13.3.2	Automatic Depressurization System Actuation	13-2
13.3.3	Post-Loss-of-Coolant Accident	13-3
13.3.4	Post-Main Steam Line Break	13-3
13.4	Initiating Event Review	13-3
13.4.1	Initiating Events Impacting the Passive Containment Cooling System	13-3
13.4.2	Initiating Events due to Loss of the Passive Containment Cooling System	13-3
13.5	System Logic Model	13-3
13.5.1	Assumptions and Boundary Conditions	13-4
13.5.2	Fault Tree Model	13-5
13.5.3	Human Interactions	13-6
13.5.4	Common Cause Failures	13-6
CHAPTER 14	MAIN AND STARTUP FEEDWATER SYSTEM	
14.1	System Description	14-1
14.1.1	Support Systems	14-1
14.1.2	Instrumentation and Control	14-2
14.1.3	Test and Maintenance	14-2
14.2	System Operation	14-2
14.3	Performance During Accident Conditions	14-2
14.4	Initiating Event Review	14-4
14.4.1	Initiating Event Impacting Main and Startup Feedwater/ Condensate System	14-4
14.4.2	Initiating Event due to Loss of Main and Startup Feedwater/ Condensate System	14-4
14.5	System Logic Models	14-4
14.5.1	Assumptions and Boundary Conditions	14-5
14.5.2	Fault Tree Models	14-7
14.5.3	Human Interactions	14-7
14.5.4	Common Cause Failures	14-7
14.6	Quantification and Results	14-7

TABLE OF CONTENTS (cont.)

Section	Title	Page
CHAPTER 15	CHEMICAL AND VOLUME CONTROL SYSTEM	
15.1	System Description	15-1
15.1.1	Support Systems	15-1
15.1.2	Instrumentation and Control Assumptions	15-1
15.1.3	Test and Maintenance Assumptions	15-2
15.2	System Operation	15-3
15.3	Performance During Accident Conditions	15-3
15.4	Initiating Event Review	15-4
15.4.1	Initiating Events Impacting the Chemical and Volume Control System	15-5
15.4.2	Initiating Events Due to Loss of the Chemical and Volume Control System	15-5
15.5	System Logic Models	15-5
15.5.1	Assumptions and Boundary Conditions	15-5
15.5.2	Fault Tree Models	15-7
15.5.3	Human Interactions	15-7
15.5.4	Common Cause Failures	15-8
CHAPTER 16	CONTAINMENT HYDROGEN CONTROL SYSTEM	
16.1	System Description	16-1
16.1.1	Support Systems	16-1
16.1.2	Instrumentation and Control	16-1
16.1.3	Test and Maintenance	16-1
16.2	System Operation	16-2
16.3	Performance During Accident Conditions	16-2
16.4	Initiating Event Review	16-2
16.5	System Logic Model	16-2
16.5.1	Assumptions and Boundary Conditions	16-2
16.5.2	Fault Tree Model	16-3
16.5.3	Human Interactions	16-3
16.5.4	Common Cause Failures	16-4
CHAPTER 17	NORMAL RESIDUAL HEAT REMOVAL SYSTEM	
17.1	System Description	17-1
17.1.1	Support Systems	17-1
17.1.2	Instrumentation and Control	17-1
17.1.3	Test and Maintenance Assumptions	17-1
17.2	System Operation	17-1
17.3	Performance During Accident Conditions	17-2
17.4	Initiating Event Review	17-3
17.4.1	Initiating Events Impacting the Normal Residual Heat Removal System	17-3
17.4.2	Initiating Events Due to Loss of the Normal Residual Heat Removal System	17-4

TABLE OF CONTENTS (cont.)

Section	Title	Page
17.5	System Logic Models	17-4
	17.5.1 Assumptions and Boundary Conditions	17-4
	17.5.2 Fault Tree Models	17-6
	17.5.3 Human Interactions	17-6
	17.5.4 Common Cause Failures	17-6
17.6	References	17-6
CHAPTER 18	COMPONENT COOLING WATER SYSTEM	
18.1	System Description	18-1
	18.1.1 Support Systems	18-1
	18.1.2 Instrumentation and Control	18-1
	18.1.3 Test and Maintenance Assumptions	18-1
18.2	System Operation	18-2
18.3	Performance During Accident Conditions	18-2
18.4	Initiating Event Review	18-2
	18.4.1 Initiating Events Impacting the Component Cooling Water System	18-2
	18.4.2 Initiating Events Due to Loss of the Component Cooling Water System	18-3
18.5	System Logic Models	18-3
	18.5.1 Assumptions and Boundary Conditions	18-3
	18.5.2 Fault Tree Models	18-4
	18.5.3 Human Interactions	18-4
	18.5.4 Common Cause Failures	18-5
CHAPTER 19	SERVICE WATER SYSTEM	
19.1	System Description	19-1
	19.1.1 Support Systems	19-1
	19.1.2 Instrumentation and Control	19-1
	19.1.3 Test and Maintenance Assumptions	19-1
19.2	System Operation	19-2
19.3	Performance During Accident Conditions	19-2
19.4	Initiating Event Review	19-2
	19.4.1 Initiating Events Impacting the Service Water System	19-2
	19.4.2 Initiating Events Due to Loss of the Service Water System	19-2
19.5	System Logic Models	19-3
	19.5.1 Assumptions and Boundary Conditions	19-3
	19.5.2 Fault Tree Models	19-4
	19.5.3 Human Interactions	19-5
	19.5.4 Common Cause Failures	19-5

TABLE OF CONTENTS (cont.)

Section	Title	Page
CHAPTER 20	CENTRAL CHILLED WATER SYSTEM	
20.1	System Description	20-1
20.1.1	Support Systems	20-1
20.1.2	Instrumentation and Control	20-1
20.1.3	Test and Maintenance Assumptions	20-1
20.2	System Operation	20-2
20.3	Performance During Accident Conditions	20-2
20.4	Initiating Event Review	20-2
20.4.1	Initiating Events Impacting the Central Chilled Water System	20-2
20.4.2	Initiating Events Due to Loss of the Central Chilled Water System	20-3
20.5	System Logic Model	20-3
20.5.1	Assumptions and Boundary Conditions	20-3
20.5.2	Fault Tree Model	20-4
20.5.3	Human Interactions	20-4
20.5.4	Common Cause Failures	20-4
CHAPTER 21	AC POWER SYSTEM	
21.1	System Description	21-1
21.1.1	Support Systems	21-1
21.1.2	Instrumentation and Control	21-2
21.1.3	Test and Maintenance Assumptions	21-2
21.2	System Operation	21-2
21.3	Performance During Accident Conditions	21-3
21.3.1	Automatic Load Shedding	21-3
21.3.2	Manual Transfer	21-3
21.3.3	Electric Circuit Protection	21-3
21.4	Initiating Event Review	21-3
21.4.1	Loss of the Main Generator	21-4
21.4.2	Loss of Offsite Power	21-4
21.4.3	Loss of 6900-vac and 480-vac Busses	21-4
21.5	System Logic Models	21-4
21.5.1	Assumptions and Boundary Conditions	21-5
21.5.2	Fault Tree Models	21-7
21.5.3	Human Interactions	21-8
21.5.4	Common Cause Failures	21-8
CHAPTER 22	CLASS 1E DC AND UNINTERRUPTIBLE POWER SUPPLY SYSTEM	
22.1	System Description	22-1
22.1.1	Support Systems	22-1
22.1.2	Instrumentation and Control	22-1
22.1.3	Test and Maintenance Assumptions	22-1
22.2	System Operation	22-2
22.3	Performance During Accident Conditions	22-2

TABLE OF CONTENTS (cont.)

Section	Title	Page
22.4	Initiating Event Review	22-2
	22.4.1 Initiating Events Impacting the Class 1E dc and UPS System	22-3
	22.4.2 Initiating Events Due to Loss of the Class 1E dc and UPS System	22-3
22.5	System Logic Models	22-3
	22.5.1 Assumptions and Boundary Conditions	22-3
	22.5.2 Fault Tree Models	22-4
	22.5.3 Human Interactions	22-4
	22.5.4 Common Cause Failures	22-4
22.6	References	22-5
CHAPTER 23	NON-CLASS 1E DC AND UPS SYSTEM	
23.1	System Description	23-1
	23.1.1 Support Systems	23-1
	23.1.2 Instrumentation and Control	23-1
	23.1.3 Test and Maintenance Assumptions	23-1
23.2	System Operation	23-2
23.3	Performance During Accident Conditions	23-2
23.4	Initiating Event Review	23-2
	23.4.1 Initiating Events Impacting the Non-Class 1E dc and UPS System	23-2
	23.4.2 Initiating Events Due to Loss of the Non-Class 1E dc and UPS Power System	23-3
23.5	System Logic Models	23-3
	23.5.1 Assumptions and Boundary Conditions	23-3
	23.5.2 Fault Tree Models	23-4
	23.5.3 Human Interactions	23-5
	23.5.4 Common Cause Failures	23-5
23.6	References	23-5
CHAPTER 24	CONTAINMENT ISOLATION	
24.1	System Description	24-1
	24.1.1 Support Systems	24-1
	24.1.2 Instrumentation and Control	24-1
	24.1.3 Test and Maintenance Assumptions	24-2
24.2	System Operation	24-2
24.3	Performance During Accident Conditions	24-2
24.4	Initiating Event Review	24-2
	24.4.1 Initiating Events Impacting Containment Isolation	24-2
	24.4.2 Initiating Events Due to Loss of the Containment Isolation System	24-2
24.5	System Logic Models	24-3
	24.5.1 Assumptions and Boundary Conditions	24-4
	24.5.2 Fault Tree Models	24-5
	24.5.3 Human Interactions	24-6
	24.5.4 Common Cause Failures	24-6
24.6	References	24-6

TABLE OF CONTENTS (cont.)

Section	Title	Page
CHAPTER 25	COMPRESSED AND INSTRUMENT AIR SYSTEM	
25.1	System Description	25-1
25.1.1	Support Systems	25-2
25.1.2	Instrumentation and Control	25-2
25.1.3	Test and Maintenance Assumptions	25-3
25.2	System Operation	25-3
25.3	Performance During Accident Conditions	25-3
25.4	Initiating Event Review	25-4
25.4.1	Initiating Events Impacting the Instrument Air Subsystem	25-4
25.4.2	Initiating Events Due to Loss of the Instrument Air Subsystem	25-4
25.5	System Logic Models	25-4
25.5.1	Assumptions and Boundary Conditions	25-4
25.5.2	Fault Tree Models	25-6
25.5.3	Human Interactions	25-7
25.5.4	Common Cause Failures	25-7
CHAPTER 26	PROTECTION AND SAFETY MONITORING SYSTEM	
26.1	System Analysis Description	26-1
26.1.1	Analysis of Support Systems	26-4
26.1.2	Analysis of Instrumentation	26-5
26.1.3	Test and Maintenance Assumptions	26-6
26.2	Performance During Accident Conditions	26-7
26.3	Initiating Event Review	26-7
26.3.1	Initiating Event Impacting PMS	26-7
26.3.2	Initiating Event due to Loss of PMS	26-8
26.4	System Logic Model Development	26-8
26.4.1	Assumptions and Boundary Conditions	26-8
26.4.2	Fault Tree Models	26-12
26.4.3	Description of I&C Subtree Development	26-12
26.4.4	Human Interactions	26-19
26.5	Discussion of Methodology	26-19
26.5.1	Fault Tree Analysis	26-20
26.5.2	Unavailability	26-20
26.5.3	Spurious Failure Rate Per Year	26-20
26.5.4	Common Cause Failures	26-22
26.5.5	Data Manipulation	26-23
26.6	References	26-24
CHAPTER 27	DIVERSE ACTUATION SYSTEM	
27.1	System Analysis Description	27-1
27.1.1	Support Systems Analysis	27-2
27.1.2	Analysis of Instrumentation and Control	27-2
27.1.3	Test and Maintenance	27-2

TABLE OF CONTENTS (cont.)

Section	Title	Page
27.2	Analysis of System Operation	27-2
27.3	Performance During Accident Conditions	27-6
27.4	Initiating Event Review	27-6
27.4.1	Initiating Events Impacting the Diverse Actuation System	27-6
27.4.2	Initiating Events Due to Loss of the Diverse Actuation System	27-6
27.5	System Logic Model	27-6
27.5.1	Assumptions and Boundary Conditions	27-7
27.5.2	Fault Tree Model	27-7
27.5.3	Human Interactions	27-7
27.5.4	Common Cause Failures	27-8
CHAPTER 28	PLANT CONTROL SYSTEM	
28.1	System Analysis Description	28-1
28.1.1	Analysis of Support Systems	28-3
28.1.2	Analysis of Instrumentation	28-4
28.1.3	Test and Maintenance Assumptions	28-4
28.2	Performance During Accident Conditions	28-6
28.3	Initiating Event Review	28-6
28.3.1	Initiating Events Impacting the Plant Control System	28-6
28.3.2	Initiating Event due to Loss of the Plant Control System	28-6
28.4	System Logic Model Development	28-7
28.4.1	Assumptions and Boundary Conditions	28-7
28.4.2	Fault Tree Models	28-9
28.4.3	Description of I&C Subtree Development	28-10
28.4.4	Human Interactions	28-16
28.5	Discussion of Methodology	28-17
28.5.1	Fault Tree Analysis	28-17
28.5.2	Unavailability	28-17
28.5.3	Common Cause Failures	28-17
28.5.4	Data Manipulation	28-18
CHAPTER 29	COMMON-CAUSE ANALYSIS	
29.1	Introduction	29-1
29.2	Dependent Failures	29-1
29.3	Common-Cause Analysis	29-4
29.3.1	Assumptions	29-4
29.3.2	Analysis of Potential Common-Cause Failures within the Systems	29-6
29.3.3	Analysis of Potential Common-Cause Failures among Several Systems	29-6
29.4	Calculations For Component Groups	29-6
29.4.1	DC Batteries	29-7
29.4.2	Reactor Trip Breakers	29-8
29.4.3	Automatic Depressurization System Explosive Valves	29-9

TABLE OF CONTENTS (cont.)

Section	Title	Page
29.4.4	Air-Operated Valves in Core Makeup Tanks	29-10
29.4.5	Automatic Depressurization System Motor-Operated Valves	29-11
29.4.6	Common-Cause Failure for IRWST Valves	29-14
29.5	Results	29-17
29.6	References	29-17
ATTACHMENT 29A	COMMON-CAUSE ANALYSIS GUIDELINES	29A-1
29A.1	Introduction	29A-1
29A.2	Types of Dependencies	29A-1
29A.3	Common Cause Failures Definition	29A-2
29A.4	Methodology	29A-3
29A.5	Common Cause Failures Calculation Procedure	29A-4
29A.5.1	Procedure for Treatment of Common Cause Failures Within a System	29A-5
29A.5.2	Procedure for Treatment of Common Cause Failures Among More Systems	29A-7
29A.6	Common Cause Failure Numerical Evaluation	29A-8
29A.6.1	Evaluation through Beta Factor Method	29A-8
29A.6.2	Evaluation through Multiple-Greek Letter (MGL) Method	29A-8
29A.7	References	29A-10
CHAPTER 30	HUMAN RELIABILITY ANALYSIS	
30.1	Introduction	30-1
30.2	Summary of Results	30-1
30.3	Methodology	30-2
30.4	Major Assumptions	30-4
30.5	Types of Human Interactions	30-10
30.5.1	Quantification Model	30-11
30.6	Quantification	30-12
30.6.1	ZON-MAN01 (Start the Onsite Standby Diesel Generator)	30-12
30.6.2	LPM-MAN01 (Recognize the Need for Reactor Coolant System Depressurization)	30-13
30.6.3	LPM-MAN02 (Recognize the Need for Reactor Coolant System Depressurization)	30-15
30.6.4	LPM-MAN05 (Recognize the Need for Reactor Coolant System Depressurization)	30-16
30.6.5	LPM-REC01 (Recognize the Need for Reactor Coolant System Depressurization)	30-17
30.6.6	ADN-MAN01 (Actuate the Automatic Depressurization System)	30-17
30.6.7	ADN-REC01 (Actuate the Automatic Depressurization System)	30-19
30.6.8	CCB-MAN01 (Start the Standby Component Cooling Water Pump)	30-19
30.6.9	CCN-MAN02 (Inadvertent Misalignment of Heat Exchanger)	30-20
30.6.10	CIB-MAN00 (Diagnose Steam Generator Tube Rupture)	30-21
30.6.11	DUMP-MAN01 (Operate Steam Dump Valves)	30-22

TABLE OF CONTENTS (cont.)

Section	Title	Page
30.6.12	CIC-MAN01 (Isolate Containment)	30-23
30.6.13	ADS-MANTEST (Recognize the Need and Reclose ADS Stage MOV)	30-24
30.6.14	CAN-MAN0S (Locally Close Manual Valve CAS-V204 to Isolate Containment)	30-25
30.6.15	CIT-MAN0S (Isolate Containment)	30-26
30.6.16	CMN-MAN01 (Actuate Core Makeup Tank)	30-27
30.6.17	CMN-REC01 (Actuate the Core Makeup Tanks)	30-28
30.6.18	CVN-MAN00 (Align Chemical and Volume Control System)	30-29
30.6.19	CVN-MAN02 (Align Chemical and Volume Control System)	30-30
30.6.20	CVN-MAN03 (Start Chemical and Volume Control System Pump B)	30-30
30.6.21	ADF-MAN01 (Depressurize the RCS to Refill the Pressurizer)	30-31
30.6.22	SGHL-MAN01 (Isolate Feedwater to Failed Steam Generator)	30-32
30.6.23	CAN-MAN01 (Start Standby Compressor)	30-33
30.6.24	REN-MAN02 (Initiate Recirculation)	30-33
30.6.25	REN-MAN03 (Initiate Recirculation)	30-34
30.6.26	IWN-MAN00 (Operate In-Containment Refueling Water Storage Tank Motor-Operated Valves)	30-35
30.6.27	RHN-MAN01 (Align Normal Residual Heat Removal System)	30-36
30.6.28	RHN-MANDIV (Align Normal Residual Heat Removal System)	30-37
30.6.29	RHN-MAN02/RHN-MAN03 (Align Normal Residual Heat Removal System)	30-38
30.6.30	PCN-MAN01 (Actuate Passive Containment Cooling System)	30-40
30.6.31	HPM-MAN01 (Diagnose Need for High Pressure Heat Removal)	30-40
30.6.32	PRN-MAN01 (Align Passive Residual Heat Removal System)	30-41
30.6.33	PRN-MAN02 (Align Passive Residual Heat Removal System)	30-42
30.6.34	PRN-MAN03 (Align Passive Residual Heat Removal System)	30-43
30.6.35	PRI-MAN01 (Isolate Failed Passive Residual Heat Removal Heat Exchanger)	30-44
30.6.36	REN-MAN04 (Initiate Recirculation)	30-45
30.6.37	RCN-MAN01 (Trip Reactor Coolant Pumps)	30-46
30.6.38	ATW-MAN01 (Manually Insert Control Rods)	30-47
30.6.39	ATW-MAN03 (Manually Trip the Reactor through Protection and Safety Monitoring System in One Minute)	30-48
30.6.40	ATW-MAN04 (Manually Trip the Reactor through Diverse Actuation System in One Minute)	30-49
30.6.41	ATW-MAN05 (Manually Trip the Reactor through Protection and Safety Monitoring System in Seven Minutes)	30-49
30.6.42	ATW-MAN06 (Manually Trip the Reactor through Diverse Actuation System In Seven Minutes)	30-50
30.6.43	RTN-MAN01 (Perform Controlled Reactor Shutdown)	30-51
30.6.44	FWN-MAN02 (Start the Startup Feedwater Pumps)	30-52
30.6.45	FWN-MAN03 (Start the Startup Feedwater Pumps)	30-53
30.6.46	REG-MAN00 (Regulate Startup Feedwater)	30-54

TABLE OF CONTENTS (cont.)

Section	Title	Page
30.6.47	CIA-MAN01 (Isolate Failed Steam Generator)	30-55
30.6.48	CIB-MAN01 (Close Main Steam Isolation Valve)	30-56
30.6.49	SGA-MAN01 (Inadvertent Opening of Steam Generator Power-Operated Relief Valve)	30-57
30.6.50	SWN-MAN01N (Open Air-Operated Valve on Motor Strainer Line)	30-58
30.6.51	SWB-MAN02 (Start Standby Service Water Pump)	30-58
30.6.52	SWB-MAN02N (Start Standby Service Water Pump)	30-59
30.6.53	TCB-MAN01 (Start Standby Turbine Closed Cooling Water Pump)	30-60
30.6.54	TCB-MAN02 (Locally Align Standby Turbine Closed Cooling Water Heat Exchanger)	30-61
30.6.55	VLN-MAN01 (Actuate Hydrogen Control System)	30-62
30.6.56	VWN-MAN01 (Align Standby Chiller)	30-63
30.6.57	ATW-MAN11 (Recognize the Need for Manual Boration)	30-64
30.6.58	REC-MANDAS (Diagnosis of an Event Through DAS Signals or Perform an Activity by Operating DAS Controls)	30-65
30.6.59	RHN-MAN04 (Isolate the RNS During Shutdown Conditions)	30-65
30.6.60	RHN-MAN05 (Initiate Gravity Injection from IRWST via RNS Suction Line)	30-66
30.6.61	RHN-MAN06 (Recognize the Need and Throttle RNS Valve V011)	30-68
30.6.62	RCS-MANODS1 (Close AOVs CVS-V045 or -V047, Given Failure of HL Level Instruments)	30-68
30.6.63	RCS-MANODS2 (Close AOVs CVS-V045 or -V047, Given Failure of Valves to Close Automatically)	30-70
30.6.64	SWN-MAN03 (Recognize the Need and Locally Refill Service Water Basin)	30-70
30.7	Conditional Probability Evaluation	30-71
30.7.1	Application	30-72
30.7.2	Process Used to Determine Dependencies	30-72
30.7.3	Calculation of Dependent Human Error Probabilities	30-72
30.8	References	30-74
ATTACHMENT 30A	HUMAN RELIABILITY ANALYSIS GUIDELINES	30A-1
30A.1	Introduction	30A-1
30A.2	Schedule for Human Reliability Analysis	30A-1
30A.3	Methodology	30A-1
30A.4	Responsibility	30A-2
30A.5	Procedure for Human Interaction Evaluation	30A-2
30A.5.1	Type A	30A-3
30A.5.2	Type B	30A-3
30A.5.3	Type C	30A-4
30A.5.4	Commission Errors That Have Detrimental Effects	30A-6

TABLE OF CONTENTS (cont.)

Section	Title	Page
30A.6	Procedure for Human Error Probabilities Quantification	30A-8
	30A.6.1 Basic Assumptions for Human Interaction Analysis	30A-8
30A.7	References	30A-9
CHAPTER 31	OTHER EVENT TREE NODE PROBABILITIES	
31.1	Introduction	31-1
31.2	Identification of Cases Requiring Calculations	31-1
	31.2.1 BL – Main Steam Line Break Occurs Inside Containment	31-1
	31.2.2 CNB – Containment Isolation Fails Due to Reactor Coolant System Vessel Rupture	31-1
	31.2.3 MGSET – Control Rods Motor-Generator Set Trip	31-1
	31.2.4 NSGTR – Consequential Steam Generator Tube Rupture	31-2
	31.2.5 PO – Pre-existing Containment Opening Allowing Bypass	31-2
	31.2.6 PRES – Reactor Coolant System Pressure Relief via Pressurizer Safety Valves	31-2
	31.2.7 PRSOV – Pressurizer Safety Valves Reclose	31-2
	31.2.8 R05 – Offsite Power Recovered within One-Half Hour	31-2
	31.2.9 SLSOV – Main Steam Line Relief Valves Reclose	31-2
31.3	Case-Specific Calculations	31-3
	31.3.1 BL – Main Steam Line Break Occurs Inside Containment	31-3
	31.3.2 CNB – Containment Isolation Fails Due to RCS Vessel Rupture	31-3
	31.3.3 MGSET – Control Rods Motor-Generator Set Trip	31-3
	31.3.4 PO – Pre-existing Containment Opening Allowing Bypass	31-4
	31.3.5 PRES – Reactor Coolant System Pressure Relief via Pressurizer Safety Valves	31-4
	31.3.6 PRSOV – Pressurizer Safety Valves Reclose	31-5
	31.3.7 R05 – Offsite Power Recovered within One-Half Hour	31-6
	31.3.8 SGTR1 – Single Consequential Steam Generator Tube Rupture	31-6
	31.3.9 SGTR – Multiple Consequential Steam Generator Tube Rupture	31-8
	31.3.10 SLSOV – Main Steam Line Relief and Safety Valves Reclose	31-8
	31.3.11 SLSOV1 – Main Steam Line Relief and Safety Valves Reclose	31-9
	31.3.12 SLSOV2 – Main Steam Line Safety Valves Reclose	31-10
	31.3.13 SLSOV3 – Main Steamline Relief and Safety Valves Reclose, SGTR	31-10
31.4	References	31-11
CHAPTER 32	DATA ANALYSIS AND MASTER DATA BANK	
32.1	Data Analysis	32-1
	32.1.1 Random Component Failure Data	32-1
	32.1.2 Test and Maintenance Unavailability	32-2
	32.1.3 Common Cause Failure Data	32-2
	32.1.4 Human Reliability Data	32-2
	32.1.5 Initiating Event Frequency Data	32-2

TABLE OF CONTENTS (cont.)

Section	Title	Page
32.2	Master Data Bank	32-2
32.2.1	Initiating Event Frequencies	32-3
32.2.2	Random Component Failures	32-3
32.2.3	Common Cause Failure Probabilities	32-3
32.2.4	Human Error Probabilities	32-3
32.2.5	System-Specific Calculations	32-3
32.2.6	Other Event Tree Node Probabilities	32-3
32.2.7	Master Data Bank	32-4
32.3	References	32-4
CHAPTER 33	FAULT TREE AND CORE DAMAGE QUANTIFICATION	
33.1	Introduction	33-1
33.2	Fault Tree Model Quantification	33-1
33.3	Event Tree Model Calculation	33-1
33.3.1	Core Damage Quantification Method	33-2
33.3.2	Core Damage Quantification Input Files and Data	33-4
33.3.3	Definition of Consequential Event Categories	33-4
33.3.4	Incorporate Operator Action Dependencies Into Plant Core Damage Frequency Quantification	33-6
33.3.5	Core Damage Frequency Results	33-6
CHAPTER 34	SEVERE ACCIDENT PHENOMENA TREATMENT	
34.1	Introduction	34-1
34.2	Treatment of Physical Processes	34-1
34.2.1	In-Vessel Retention of Molten Core Debris	34-1
34.2.2	Fuel-Coolant Interaction (Steam Explosions)	34-2
34.2.3	Hydrogen Combustion and Detonation	34-4
34.2.4	High-Pressure Melt Ejection	34-5
34.2.5	Core Debris Coolability	34-5
34.2.6	Containment Pressurization from Decay Heat	34-6
34.2.7	Elevated Temperature (Equipment Survivability)	34-7
34.2.8	Summary	34-7
34.3	Analysis Method	34-7
34.4	Severe Accident Analyses	34-8
34.4.1	Accident Class 3BE – Intact Containment	34-8
34.4.2	Accident Class 3BE – Failed Containment	34-10
34.4.3	Accident Class 3BL – Intact Containment	34-11
34.4.4	Accident Class 3BR – Intact Containment	34-12
34.4.5	Accident Class 3C – Intact Containment	34-13
34.4.6	Accident Class 3C – Failed Containment	34-14
34.4.7	Accident Class 3D – Intact Containment	34-14
34.4.8	Accident Class 3D – Failed Containment	34-16
34.4.9	Accident Class 6E – Bypass Containment	34-16

TABLE OF CONTENTS (cont.)

Section	Title	Page
	34.4.10 Accident Class 6L – Bypass Containment	34-17
	34.4.11 Accident Class 1AP	34-17
	34.4.12 Accident Class 1A	34-18
34.5	Insights and Conclusions	34-19
34.6	References	34-20
CHAPTER 35	CONTAINMENT EVENT TREE ANALYSIS	
35.1	Introduction	35-1
35.2	Containment Event Tree – General Discussion	35-1
35.3	Event Tree Construction	35-2
35.4	Level 1/Level 2 Interface	35-3
35.5	Containment Event Tree Top Events	35-3
	35.5.1 Severe Accident Phenomena Considerations	35-3
	35.5.2 Operator Action and Systems Top-Event Considerations	35-5
35.6	Release Category Definitions	35-7
	35.6.1 Release Category BP – Containment Bypass	35-8
	35.6.2 Release Category CI – Containment Isolation Failure	35-9
	35.6.3 Release Category CFE – Early Containment Failure	35-9
	35.6.4 Release Category CFI – Intermediate Containment Failure	35-9
	35.6.5 Release Category CFL – Late Containment Failure	35-9
	35.6.6 Release Category CFV – Containment Venting	35-10
	35.6.7 Release Category IC – Intact Containment	35-10
35.7	Top-Event Nodal Questions and Success Criteria	35-10
	35.7.1 Top Event DP – RCS Depressurization After Core Uncovery	35-11
	35.7.2 Top Event IS – Containment Isolation	35-12
	35.7.3 Top Event IR – Reactor Cavity Flooding	35-13
	35.7.4 Top Event RFL – Reflooding of a Degraded Core	35-14
	35.7.5 Top Event VF – Debris Relocation to the Reactor Cavity	35-14
	35.7.6 Top Event PC – Passive Containment Cooling	35-15
	35.7.7 Top Event VNT – Containment Venting	35-16
	35.7.8 Top Event IF – Intermediate Containment Failure	35-16
	35.7.9 Top Event IG – Hydrogen Control System	35-17
	35.7.10 Top Event DF – Diffusion Flame	35-17
	35.7.11 Top Event DTE – Early Hydrogen Detonation	35-18
	35.7.12 Top Event DFG – Hydrogen Deflagration	35-19
	35.7.13 Top Event DTI – Intermediate Hydrogen Detonation	35-19
35.8	Summary	35-20
35.9	References	35-20
CHAPTER 36	REACTOR COOLANT SYSTEM DEPRESSURIZATION	
36.1	Introduction	36-1
36.2	Definition of High Pressure	36-1
36.3	Node DP	36-2

TABLE OF CONTENTS (cont.)

Section	Title	Page
36.4	Success Criteria	36-2
	36.4.1 Accident Classes 3BE, 3BL, 3BR, 3C	36-2
	36.4.2 Accident Class 3D/1D	36-3
	36.4.3 Accident Classes 1A and 1AP	36-3
	36.4.4 Steam Generator Tube Rupture – Accident Class 6	36-4
	36.4.5 Anticipated Transient Without Scram – Accident Class 3A	36-5
36.6	References	36-5
CHAPTER 37	CONTAINMENT ISOLATION	
37.1	Introduction	37-1
37.2	Definition of Containment Isolation	37-1
37.3	Success Criteria	37-1
	37.3.1 Accident Classes 1A and 1AP	37-2
	37.3.2 Accident Class 3A	37-2
	37.3.3 Accident Class 3BR	37-2
	37.3.4 Accident Class 3BE	37-2
	37.3.5 Accident Class 3BL	37-2
	37.3.6 Accident Class 3C	37-2
	37.3.7 Accident Class 3D/1D	37-3
	37.3.8 Accident Class 6	37-3
37.4	Summary	37-3
CHAPTER 38	REACTOR VESSEL REFLOODING	
38.1	Introduction	38-1
38.2	Definition of Reflooding Success	38-1
38.3	Success Criteria	38-1
	38.3.1 Accident Classes 1A and 1AP	38-1
	38.3.2 Accident Class 3BR	38-2
	38.3.3 Accident Class 3BE	38-2
	38.3.4 Accident Class 3BL	38-3
	38.3.5 Accident Class 3D/1D	38-3
	38.3.6 Accident Class 6	38-3
	38.3.7 Accident Class 3C	38-3
	38.3.8 Accident Class 3A	38-4
38.4	Summary	38-4
CHAPTER 39	IN-VESSEL RETENTION OF MOLTEN CORE DEBRIS	
39.1	Introduction	39-1
39.2	Background on the Application of IVR to the Passive Plant	39-1
39.3	Application of IVR to the AP1000 Passive Plant	39-2
39.4	Reactor Vessel Failure Criteria	39-3
39.5	In-Vessel Melt Progression and Relocation	39-4

TABLE OF CONTENTS (cont.)

Section	Title	Page
39.6	Application of Heat Transfer Correlations to the AP1000	39-6
	39.6.1 Debris Pool to Vessel Wall Heat Transfer	39-6
	39.6.2 Vessel Wall to External Cooling Water Heat Transfer	39-7
39.7	Quantification of Margin to Failure of the Reactor Vessel Wall	39-8
	39.7.1 Zirconium Oxidation Fraction Input Probability Distribution	39-9
	39.7.2 Steel Mass Input Probability Distribution	39-9
	39.7.3 Final Bounding State Timing Input Probability Distribution	39-10
	39.7.4 Critical Heat Flux	39-10
	39.7.5 Results and Conclusions of Heat Flux Quantification	39-10
39.8	Reactor Coolant System Depressurization	39-11
39.9	Reactor Cavity Flooding (Node IR)	39-11
	39.9.1 Node IR Success Criteria	39-12
	39.9.2 Cavity Flooding Scenario Dependencies	39-13
39.10	Reactor Vessel Insulation Design Concept	39-15
	39.10.1 Description of Reactor Vessel Insulation and Venting	39-15
	39.10.2 Design Analysis of the Insulation and Support Frame	39-17
39.11	Reactor Vessel External Surface Treatment	39-18
39.12	Reactor Vessel Failure (Node VF)	39-18
	39.12.1 Node VF Success Criteria	39-18
39.13	Summary	39-19
39.14	References	39-19
ATTACHMENT 39A	AP1000 IN-VESSEL CORE MELTING RELOCATION	39A-1
39A.1	Introduction	39A-1
39A.2	Phenomenological Issues	39A-1
	39A.2.1 Focusing Effect	39A-1
	39A.2.2 Material Interaction	39A-1
39A.3	AP1000 Reactor Vessel Lower Internals Geometry	39A-1
39A.4	Modeling of Core and Reactor Vessel Lower Internals Heatup	39A-2
	39A.4.1 MAAP4 Model	39A-2
	39A.4.2 Finite Difference Modeling	39A-3
	39A.4.3 Relocation of In-Core Debris to Lower Plenum	39A-3
39A-5	Base Core Damage Sequence for In-Vessel Retention	39A-3
	39A.5.1 Core Heatup and Formation of In-Core Molten Debris Layers	39A-4
	39A.5.2 Melting of Core Shroud and Core Barrel	39A-6
	39A.5.3 Initial Relocation of Molten Core Debris to Lower Plenum	39A-7
	39A.5.4 Lower Plenum Debris Pool Formation	39A-8
39A.6	Potential for Debris Interaction	39A-12
39A.7	Conclusions from Analysis of AP1000 In-Vessel Core Melting and Relocation	39A-12
39A.8	References	39A-13

TABLE OF CONTENTS (cont.)

Section	Title	Page
CHAPTER 40	PASSIVE CONTAINMENT COOLING, LONG TERM CONTAINMENT INTEGRITY AND CONTAINMENT VENTING	
40.1	Passive Containment Cooling System	40-1
40.2	Passive Containment Cooling Water – Node PC	40-2
40.2.1	Node PC Success Criteria	40-2
40.2.2	Operator Action	40-2
40.2.3	Node PC Failure Probability	40-3
40.3	Containment Venting – Node VT	40-3
40.3.1	Venting Success Criteria	40-3
40.3.2	Venting Failure Probability	40-4
40.4	Intermediate Containment Failure – Node IF	40-4
40.4.1	Success Criterion	40-5
40.4.2	Intermediate Containment Failure Probability	40-5
40.5	References	40-5
CHAPTER 41	HYDROGEN MIXING AND COMBUSTION ANALYSIS	
41.1	Discussion of the Issue	41-1
41.2	Controlling Phenomena	41-2
41.3	Major Assumptions and Phenomenological Uncertainties	41-3
41.3.1	Hydrogen Generation	41-3
41.3.2	Containment Pressure	41-3
41.3.3	Flammability Limits	41-3
41.3.4	Detonation Limits and Loads	41-4
41.3.5	Igniter System	41-4
41.3.6	Other Ignition Sources	41-5
41.3.7	Severe Accident Management Actions	41-5
41.4	Hydrogen Generation and Mixing	41-5
41.4.1	Accident Class 3BE – Failure of Gravity Injection	41-6
41.4.2	Accident Class 3BL – Failure of Gravity Recirculation	41-9
41.4.3	Accident Class 3BR – Large LOCA with Accumulator Failure	41-10
41.4.4	Accident Class 3C	41-11
41.4.5	Accident Classes 3D and 1D	41-12
41.4.6	Accident Class 1AP	41-12
41.4.7	Accident Class 1A	41-13
41.4.8	Accident Class 3A	41-13
41.4.9	Accident Class 6	41-13
41.4.10	Overall Mixing Insights	41-14
41.5	Hydrogen Burning at Igniters	41-15
41.6	Early Hydrogen Combustion	41-15
41.6.1	Hydrogen Generation Rates	41-15
41.6.2	Hydrogen Release Locations	41-17
41.6.3	Early Hydrogen Combustion Ignition Sources	41-18

TABLE OF CONTENTS (cont.)

Section	Title	Page
41.7	Diffusion Flame Analysis – CET Node DF	41-18
41.7.1	AP1000 Diffusion Flame Mitigation Strategy	41-19
41.7.2	Node DF Containment Failure Probability Assignment	41-20
41.8	Early Hydrogen Detonation – Containment Event Tree Node DTE	41-21
41.8.1	Containment Success Criteria at Node DTE	41-21
41.8.2	Early Hydrogen Detonation Decomposition Event Tree	41-22
41.9	Deflagration in Time Frame 3	41-23
41.9.1	Containment Success Criterion at Node DFL	41-23
41.9.2	AICC Peak Pressure	41-24
41.9.3	Conditional Containment Failure Probability from Deflagration	41-25
41.10	Detonation in Intermediate Time Frame	41-29
41.10.1	Containment Success Criterion at Node DTI	41-29
41.10.2	Mixing and Stratification	41-29
41.10.3	Quantification of DTI Failure Probabilities	41-30
41.11	Safety Margin Basis Containment Performance Requirement	41-30
41.12	Summary	41-31
41.13	References	41-31
ATTACHMENT 41A	AP1000 SPECIFIC MAAP4.04 ANALYSES	41A-1
ATTACHMENT 41B	ANALYSIS OF HYDROGEN BURNING AT IGNITERS	41B-1
CHAPTER 42	CONDITIONAL CONTAINMENT FAILURE PROBABILITY DISTRIBUTION	
42.1	Introduction	42-1
42.2	Probabilistic Model	42-1
42.3	Containment Failure Characteristics	42-2
42.3.1	Median Values for Containment Failure	42-2
42.3.2	Uncertainties in Containment Failure	42-3
42.4	Containment Failure Predictions	42-4
42.4.1	Containment Cylindrical Shell	42-4
42.4.2	Ellipsoidal Upper Head	42-5
42.4.3	Equipment Hatches	42-5
42.4.4	Personnel Airlock	42-6
42.5	Overall Failure Distribution	42-6
42.6	Summary and Conclusions	42-7
42.7	References	42-7
CHAPTER 43	RELEASE FREQUENCY QUANTIFICATION	
43.1	Introduction	43-1
43.2	Plant Damage State Frequency Calculations	43-2
43.3	Containment Event Tree Node Frequencies	43-2
43.3.1	CET Nodes	43-2
43.3.2	CET Node Probabilities From Boolean Expressions	43-3

TABLE OF CONTENTS (cont.)

Section	Title	Page
	43.3.3 Probabilities for Hydrogen-Related CET Nodes	43-6
	43.3.4 Other CET Node Probabilities	43-6
43.4	Containment Event Tree Quantification	43-7
	43.4.1 Containment Event Tree	43-7
	43.4.2 Dominant CET Sequences	43-7
	43.4.3 LRF Cutsets for Dominant Sequences	43-7
43.5	Summary of Results	43-7
43.6	Importance and Sensitivity Analyses	43-8
	43.6.1 CET Event Node Importance Analysis	43-8
	43.6.2 No Credit Taken for DP Node for PDS-6	43-8
	43.6.3 Lesser Reliability for Containment Isolation	43-8
	43.6.4 Lesser Reliability for Hydrogen Igniters	43-8
	43.6.5 Lesser Reliability for PCS	43-9
	43.6.6 No Credit for Depressurization for High Pressure PDS	43-9
	43.6.7 Set PDS-3C Vessel Failure Probability to 1.0	43-9
	44.6.8 Set 3D and 1AP Diffusion Flame and Detonation Failure Probability to 1.0	43-9
43.7	Conclusions and Insights	43-9
ATTACHMENT 43A	PDS CALCULATIONS	43A-1
ATTACHMENT 43B	DP NODE PROBABILITY FOR PDS	43B-1
ATTACHMENT 43C	EVALUATION OF OPERATOR ACTIONS	43C-1
CHAPTER 44	MAAP4 CODE DESCRIPTION AND AP1000 MODELING	
44.0	MAAP Background	44-1
44.1	MAAP4	44-1
44.2	The AP1000 MAAP4 Modeling	44-3
44.3	Benchmarking	44-5
44.4	Summary and Conclusions	44-6
44.5	References	44-7
CHAPTER 45	FISSION-PRODUCT SOURCE TERMS	
45.1	Summary of AP1000 Release Categories	45-1
45.2	Release Category Source Terms	45-2
	45.2.1 Release Category IC	45-2
	45.2.2 Release Category BP	45-2
	45.2.3 Release Category CI	45-2
	45.2.4 Release Category CFE	45-2
	45.2.5 Release Category CFI	45-3
	45.2.6 Release Category CFL	45-3
	45.2.7 Release Category CFV	45-3

TABLE OF CONTENTS (cont.)

Section	Title	Page
45.3	Direct-Release Sensitivity Case	45-4
45.4	Summary	45-4
45.5	References	45-4
CHAPTERS 46 THROUGH 48 NOT USED		
CHAPTER 49	OFFSITE DOSE RISK QUANTIFICATION	
49.1	Introduction	49-1
49.2	Conformance with Regulatory Requirements	49-2
49.3	Assumptions	49-2
49.4	Methodology	49-2
49.5	Dose Evaluation Results and Discussion	49-5
49.6	Quantification of Site Risk	49-6
49.7	Risk Quantification Results	49-7
49.8	References	49-7
CHAPTER 50	IMPORTANCE AND SENSITIVITY ANALYSIS	
50.1	Introduction	50-1
50.2	Importance Analyses for Core Damage	50-1
50.2.1	Initiating Event Importances	50-2
50.2.2	Accident Sequence Importances	50-3
50.2.3	End State Importances	50-4
50.2.4	Common Cause Failure Importances	50-4
50.2.5	Human Error Importances	50-5
50.2.6	Component Importances	50-6
50.3	System Importances for Core Damage	50-7
50.4	Human Error Sensitivity Analyses	50-8
50.4.1	Set HEPs to 1.0 (Failure) in Core Damage Output File	50-9
50.4.2	Set HEPs to 0.0 (Success) in Core Damage Output File	50-10
50.4.3	Set HEPs to 0.1 in Core Damage Output File	50-10
50.5	Other Sensitivity Analyses for Core Damage	50-10
50.5.1	Impact of Passive System Check Valves on Core Damage Frequency	50-10
50.5.2	Sensitivity to Squib Valve Failure Probability	50-11
50.5.3	Sensitivity to Circuit Breaker Failure Probability	50-11
50.5.4	Sensitivity to Standby Systems	50-12
50.6	Results	50-14
CHAPTER 51	UNCERTAINTY ANALYSIS	
51.1	Introduction	51-1
51.2	Input Data/Error Factors	51-2
51.3	Input Files	51-3
51.4	Output Files	51-3

TABLE OF CONTENTS (cont.)

Section	Title	Page
51.5	Sensitivity Analyses	51-3
	51.5.1 Sensitivity to Simulation Parameters	51-3
	51.5.2 Sensitivity to Key Basic Events	51-3
	51.5.3 Sensitivity to Operator Actions	51-4
51.6	Summary of Results	51-6
51.7	References	51-8
ATTACHMENT 51A	ASSIGNMENT OF ERROR FACTORS TO BASIC EVENT PROBABILITIES	51A-1
ATTACHMENT 51B	@RISK UNCERTAINTY ANALYSIS RESULTS	51B-1
CHAPTERS 52 AND 53 NOT USED		
CHAPTER 54	LOW-POWER AND SHUTDOWN RISK ASSESSMENT	
54.1	Introduction	54-1
54.2	Data Analysis	54-2
54.3	Initiating Event Analysis	54-3
54.4	Event Tree/Mitigation System Evaluation	54-3
54.5	Common Cause Analysis Update for AP1000	54-3
54.6	Human Reliability Assessment for AP1000	54-5
54.7	Core Damage Quantification	54-6
	54.7.1 Discussion of Results	54-9
54.8	Conclusions	54-9
CHAPTER 55	AP1000 SEISMIC MARGINS EVALUATION	
55.1	Seismic Margin HCLPF Methodology	55-1
55.2	Calculation of HCLPF Values	55-1
	55.2.1 Seismic Margin HCLPF Methodology	55-1
	55.2.2 Calculation of HCLPF Values	55-2
55.3	Seismic Margin Model	55-11
	55.3.1 Major SMA Model Assumptions	55-11
	55.3.2 Seismic Initiating Events	55-12
	55.3.3 Initiating Event Category HCLPFs	55-13
55.4	Calculation of Plant HCLPF	55-16
	55.4.1 HCLPFs for Basic Events	55-16
	55.4.2 Calculation of Initiating Event HCLPFs	55-17
55.5	Results and Insights	55-17
	55.5.1 AP1000 SMA Results	55-17
	55.5.2 AP1000 SMA Insights	55-18
55.6	References	55-20

TABLE OF CONTENTS (cont.)

Section	Title	Page
CHAPTER 56	INTERNAL FLOODING ANALYSIS	
56.1	Introduction	56-1
56.1.1	Definitions	56-1
56.2	Methodology	56-1
56.2.1	Summary of Methodology	56-1
56.2.2	Information Collection	56-2
56.2.3	Initial Screening Assessment	56-2
56.2.4	Detailed Screening Assessment	56-4
56.2.5	Identification of Flood-Induced Initiating Events	56-5
56.2.6	Initiating Event Frequencies	56-6
56.3	Assumptions	56-6
56.3.1	General Flooding Analysis Assumptions and Engineering Judgments	56-6
56.3.2	AP1000-Specific Assumptions	56-8
56.4	Information Collection	56-10
56.4.1	PRA-Modeled Equipment and Locations	56-10
56.4.2	Identification of Areas for Flooding Evaluation	56-10
56.5	At-Power Operations	56-10
56.5.1	Initial Screening Assessment	56-11
56.5.2	Detailed Screening Assessment	56-11
56.5.3	Identification of Flood-Induced Initiating Events	56-26
56.5.4	Calculation of Flood-Induced Initiating Event Frequencies	56-29
56.5.5	Quantification of At-Power Flood-Induced Events	56-36
CHAPTER 57	FIRE RISK ASSESSMENT	
57.1	Introduction	57-1
57.2	Qualitative Analysis	57-1
57.2.1	AP600 Qualitative Analysis	57-1
57.2.2	AP1000 Qualitative Analysis	57-5
57.2.3	AP1000 Fire Areas	57-6
57.3	Initiating Event Frequencies	57-6
57.3.1	Introduction	57-6
57.3.2	Methodology	57-7
57.3.3	Results for Plant Except Containment and the Main Control Room	57-7
57.3.4	Results for the Containment	57-7
57.3.5	Results for the Main Control Room	57-7
57.4	Development of Fire Scenarios	57-10
57.4.1	Spurious Actuation Model	57-11
57.4.2	Propagation Model	57-14
57.4.3	Fire Suppression Model	57-15
57.4.4	Operation Actions	57-15
57.4.5	Development of Fire Scenarios	57-16
57.5	Calculation of Conditional Core Damage Probabilities (CCDP)	57-22

TABLE OF CONTENTS (cont.)

Section	Title	Page
57.6	Calculation of CDF from Fire Events	57-23
57.6.1	Calculation of Plant Fire CDF	57-23
57.6.2	Comments on Plant Areas	57-23
57.6.3	Importances of Fire Areas	57-25
57.6.4	Conclusion	57-27
57.7	Sensitivity Studies	57-27
57.7.1	Manual Fire Suppression Systems	57-27
57.7.2	Sensitivity Analysis of the Probability of a Spurious Actuation of ADS Valves	57-27
57.7.3	Sensitivity of Human Action on Fire	57-28
57.7.4	Sensitivity Analysis on Ignition Frequencies	57-28
57.7.5	Sensitivity Analysis on ADS Actuation by DAS	57-29
57.7.6	Sensitivity Analysis on 1E to Non-1E Separation in the Containment	57-29
57.7.7	Sensitivity Analysis to Area to Area Propagation	57-30
57.7.8	Importance of Hot Shorts	57-30
57.8	Conclusion and Insights	57-30
57.9	References	57-31
ATTACHMENT 57A	CALCULATION OF SCENARIO CCDPs	57A-1
57A.1	Calculation of Scenario CCDPs	57A-1
57A.2	Calculation of Scenario CCDPs for Overly Conservative Cases	57A-3
ATTACHMENT 57B	MODELING OF OPERATOR ACTIONS IN FIRE SCENARIOS	57B-1
57B.1	Calculation of Failure Probability of OPA-01	57B-1
57B.2	Calculation of Failure Probability of OPA-02	57B-3
57B.3	Operator Actions at Remote Shutdown Panel	57B-6
57B.4	More Reliable REC-MANDAS	57B-6
ATTACHMENT 57C	FIRE AREA EVENT TREES DEFINING SCENARIOS	57C-1
ATTACHMENT 57D	AP1000 POTENTIAL FOR FIRE-INDUCED SPURIOUS ACTUATION OF FUNCTIONS THAT RESULT IN A BREACH OF HIGH/LOW PRESSURE BOUNDARY	57D-1
CHAPTER 58	WINDS, FLOODS, AND OTHER EXTERNAL EVENTS	
58.1	Introduction	58-1
58.2	External Events Analysis	58-1
58.2.1	Severe Winds and Tornadoes	58-1
58.2.2	External Floods	58-2
58.2.3	Transportation and Nearby Facility Accidents	58-2
58.3	Conclusion	58-2
58.4	References	58-3

TABLE OF CONTENTS (cont.)

Section	Title	Page
CHAPTER 59	PRA RESULTS AND INSIGHTS	
59.1	Introduction	59-1
59.2	Use of PRA in the Design Process	59-3
59.3	Core Damage Frequency from Internal Initiating Events at Power	59-4
59.3.1	Dominant Core Damage Sequences	59-6
59.3.2	Component Importances for At-Power Core Damage Frequency	59-7
59.3.3	System Importances for At-Power Core Damage	59-8
59.3.4	System Failure Probabilities for At-Power Core Damage	59-9
59.3.5	Common Cause Failure Importances for At-Power Core Damage	59-9
59.3.6	Human Error Importances for At-Power Core Damage	59-9
59.3.7	Accident Class Importances	59-10
59.3.8	Sensitivity Analyses Summary for At-Power Core Damage	59-11
59.3.9	Summary of Important Level 1 At-Power Results	59-12
59.4	Large Release Frequency for Internal Initiating Events at Power	59-15
59.4.1	Dominant Large Release Frequency Sequences	59-15
59.4.2	Summary of Important Level 2 At-Power Results	59-16
59.5	Core Damage and Severe Release Frequency from Events at Shutdown	59-19
59.5.1	Summary of Shutdown Level 1 Results	59-19
59.5.2	Large Release Frequency for Shutdown and Low-Power Events	59-22
59.5.3	Shutdown Results Summary	59-22
59.6	Results from Internal Flooding, Internal Fire, and Seismic Margin Analyses	59-23
59.6.1	Results of Internal Flooding Assessment	59-23
59.6.2	Results of Internal Fire Assessment	59-23
59.6.3	Results of Seismic Margin Analysis	59-25
59.7	Plant Dose Risk From Release of Fission-Products	59-25
59.8	Overall Plant Risk Results	59-26
59.9	Plant Features Important to Reducing Risk	59-27
59.9.1	Reactor Design	59-28
59.9.2	Systems Design	59-28
59.9.3	Instrumentation and Control Design	59-31
59.9.4	Plant Layout	59-32
59.9.5	Containment Design	59-32
59.10	PRA Input to Design Certification Process	59-36
59.10.1	PRA Input to Reliability Assurance Program	59-36
59.10.2	PRA Input to Tier 1 Information	59-36
59.10.3	PRA Input to MMI/Human Factors/Emergency Response Guidelines	59-36
59.10.4	Summary of PRA Based Insights	59-37
59.10.5	Combined License Information	59-37
59.11	References	59-38

TABLE OF CONTENTS (cont.)

Section	Title	Page
APPENDIX A	THERMAL HYDRAULIC ANALYSIS TO SUPPORT SUCCESS CRITERIA	A-1
APPENDIX B	EX-VESSEL SEVERE ACCIDENT PHENOMENA	B-1
APPENDIX C	ADDITIONAL ASSESSMENT OF AP1000 DESIGN FEATURES	C-1
APPENDIX D	EQUIPMENT SURVIVABILITY ASSESSMENT	D-1
APPENDIX E	AP1000 PRA FAULT TREE PICTURES FOR LEVEL 1 ANALYSIS FOR EVENTS AT POWER OPERATION	E-1

LIST OF TABLES

Table No.	Title	Page
2-1	Internal Initiating Event Grouping Plant Systems and Equipment Available for Transient/Accident Conditions (Sheets 1 – 10)	2-28
2-2	NUREG/CR 3862 Initiator Categories (Sheets 1 – 4)	2-38
2-3	NUREG/CR 3862 Initiator Categories not Considered in the AP1000 PRA Analysis	2-42
2-4	AP1000 Internal Initiating Event Frequencies (Sheets 1 – 3)	2-43
2-5	Initiating Event Frequencies Used in Event Trees Quantification	2-46
2A-1	Summary of Primary System Piping Data	2A-2
2A-2	Summary of Primary System Pipe Break Frequency Quantification	2A-3
2A-3	Summary of Steam Generator Tube Rupture Events	2A-4
2A-4	Spurious Stuck-Open Pressurizer Safety Valve	2A-5
2A-5	Interface Break on Accumulator Lines	2A-6
2A-6	Interface Break on IRWST Injection Lines	2A-7
2A-7	Initiating Events Review Data Summary (Sheets 1 – 8)	2A-8
2B-1	Summary of Main Steam Line and Feedwater Line Piping Data for Secondary Side Break Frequency Quantification	2B-2
2B-2	Secondary Side Line Break Frequency Quantification	2B-3
2B-3	Stuck-Open Main Steam Line Safety Valve Frequency Quantification (Sheets 1 – 2)	2B-4
3-1	Loss of CCS/SWS Initiating Event Fault Tree CSWF Success Criteria Summary	3-8
3-2	Spurious Actuation of Automatic Depressurization Failure Criteria Summary	3-9
3-3	Evaluation of Spurious Automatic Depressurization System Frequencies (Sheets 1 – 6)	3-10
4-1	AP1000 Large LOCA Event End State Summary	4-112
4-2	AP1000 Spurious ADS Actuation Event End State Summary	4-112
4-3	AP1000 Medium LOCA Event End State Summary	4-113
4-4	AP1000 CMT Line Break LOCA Event End State Summary	4-114
4-5	AP1000 SI Line Break Event End State Summary	4-115
4-6	AP1000 Small LOCA Event End State Summary	4-116
4-7	AP1000 RCS Leak Event End State Summary	4-117
4-8	AP1000 PRHR Tube Rupture Event End State Summary	4-117
4-9	AP1000 SGTR Event End State Summary	4-118
4-10	AP1000 Vessel Rupture Event End State Summary	4-119
4-11	AP1000 Interfacing Systems LOCA Event End State Summary	4-119
4-12	AP1000 Transients with MFW Event End State Summary	4-120
4-13	AP1000 Transients with Loss of RCS Flow Event End State Summary	4-121

LIST OF TABLES (cont.)

Table No.	Title	Page
4-14	AP1000 Transients with Loss of MFW to One SG Event End State Summary	4-122
4-15	AP1000 Transients with Core Power Excursion Event End State Summary	4-123
4-16	AP1000 Transients with Loss of CCW/SW Event End State Summary	4-124
4-17	AP1000 Transients without Main Feedwater Event End State Summary	4-125
4-18	AP1000 Transients with Loss of Condenser Event End State Summary	4-126
4-19	AP1000 Transients with Loss of Compressed Air Event End State Summary	4-127
4-20	AP1000 Loss of Offsite Power Event End State Summary	4-128
4-21	AP1000 SLB Downstream of MSIVs Event End State Summary	4-129
4-22	AP1000 SLB Downstream of MSIVs Event End State Summary	4-130
4-23	AP1000 Stuck Open Secondary Side Safety Valve Event End State Summary	4-131
4-24	AP1000 ATWS Precursor without MFW Event End State Summary	4-132
4-25	AP1000 ATWS Precursor with SI Event End State Summary	4-133
4-26	AP1000 ATWS Precursor Transients with MFW Event End State Summary	4-134
4A-1	End States (Plant Damage States)	4A-17
4A-2	Summary of Systems Associated with Mitigating Functions for AP1000	4A-18
5-1	AP1000 Safety-Related Plant Support Systems with Letter Designators	5-3
5-2	AP1000 Non Safety-Related Plant Support Systems with Letter Designators	5-3
5-3	AP1000 Support Systems Interdependency Matrix (Sheets 1 – 14)	5-4
5-4	AP1000 Safety-Related Front Line Plant Systems Letter Designators	5-18
5-5	AP1000 Non Safety-Related Front Line Plant Systems Letter Designators	5-18
5-6	AP1000 Front Line System Dependencies Matrix (Sheets 1 – 18)	5-19
6-1	Summary of Event Tree Top Events Success Criteria (Internal Initiating Events at Power Cases) (Sheets 1 – 34)	6-20
6-2	Summary of Success Criteria for the Mitigating Systems (Sheets 1 – 9)	6-54
6-3	Summary of Success Criteria for Operator Actions and Mission Times (Sheets 1 – 4)	6-68
7-1	Example for Fault Tree XXX Success Criteria Summary	7-15
7-2	Example for System Dependency Matrix	7-15
7-3	Example for Component Test Assumptions	7-16
7-4	Example for Component Maintenance Assumptions	7-16
7-5	Example for Operator Actions and Misposition Analysis Summary	7-16
7-6	Fault Tree Identification Codes (Sheets 1 – 3)	7-17
7-7	System Identification Codes for Basic Events (Sheets 1 – 3)	7-20
7-8	Component Identification Codes (Sheets 1 – 7)	7-23
7-9	Failure Mode Identification Codes (Sheets 1 – 3)	7-30
8-1	List of Passive Residual Heat Removal System Fault Trees	8-7
8-2a	Fault Tree "PRT" Success Criteria	8-8
8-2b	Fault Tree "PRTA" Success Criteria	8-9

LIST OF TABLES (cont.)

Table No.	Title	Page
8-2c	Fault Tree "PRL" Success Criteria	8-10
8-2d	Fault Tree "PRP" Success Criteria	8-11
8-2e	Fault Tree "PRS" Success Criteria	8-12
8-2f	Fault Tree "PRW" Success Criteria	8-13
8-2g	Fault Tree "PRI" Success Criteria	8-14
8-3	System Dependency Matrix	8-15
8-4	Component Test Assumptions	8-16
8-5	Component Maintenance Assumptions	8-17
8-6	Operator Actions and Misposition Analysis Summary	8-18
8-7	Common Cause Failures Summary	8-19
8-8	Basic Events Database for the PRHR System Fault Trees (Sheets 1 – 3)	8-20
9-1	List of System Fault Trees	9-9
9-2a	Fault Tree CM2AB Success Criteria Summary	9-10
9-2b	Fault Tree CM2SL Success Criteria Summary	9-11
9-2c	Fault Tree CM2L Success Criteria Summary	9-12
9-2d	Fault Tree CM2P Success Criteria Summary	9-13
9-2e	Fault Tree CM1A Success Criteria Summary	9-14
9-2f	Fault Tree CM2LLT Success Criteria Summary	9-15
9-2g	Fault Tree CMBOTH Success Criteria Summary	9-16
9-2h	Fault Tree CM2LA Success Criteria Summary	9-17
9-3	Notes Related to System Fault Tree Assumptions	9-18
9-4	System Dependency Matrix	9-18
9-5	Component Test Assumptions	9-19
9-6	Component Maintenance Assumptions	9-19
9-7	Operator Actions and Misposition Analysis Summary	9-20
9-8	Common Cause Failure Analysis Summary	9-20
9-9	Fault Tree Basic Events for Core Makeup Tank Subsystem (Sheets 1 – 3)	9-21
10-1	List of System Fault Trees	10-5
10-2a	Fault Tree AC2AB Success Criteria Summary	10-6
10-2b	Fault Tree AC1A Success Criteria Summary	10-7
10-2c	Fault Tree ACBOTH Success Criteria Summary	10-8
10-3	Notes Related to System Fault Tree Assumptions	10-9
10-4	System Dependency Matrix	10-9
10-5	Component Test Assumptions	10-9
10-6	Component Maintenance Assumptions	10-10
10-7	Operator Actions and Misposition Analysis Summary	10-10
10-8	Common Cause Failure Analysis Summary	10-10
10-9	Fault Tree Basic Events for Accumulator Subsystem	10-11

LIST OF TABLES (cont.)

Table No.	Title	Page
11-1a	List of ADS System Fault Trees (Sheets 1 – 2)	11-8
11-1b	List of ADS System Fault Trees (for Plant Damage States Analysis)	11-10
11-2a	ADS Success Criteria Versus Accident Conditions (Full Depressurization)	11-11
11-2b	ADS Success Criteria Versus Accident Conditions (Partial Depressurization)	11-12
11-2c	Automatic Depressurization System Fault Tree Summary (For Plant Damage States)	11-13
11-2d	Fault Tree "ADA" Success Criteria	11-13
11-2e	Fault Tree "ADAB" Success Criteria	11-14
11-2f	Fault Tree "ADAL" Success Criteria	11-15
11-2g	Fault Tree "ADB" Success Criteria	11-15
11-2h	Fault Tree "ADL" Success Criteria	11-16
11-2i	Fault Tree "ADM" Success Criteria	11-16
11-2j	Fault Tree "ADMA" Success Criteria	11-17
11-2k	Fault Tree "ADQ" Success Criteria	11-17
11-2l	Fault Tree "ADS" Success Criteria	11-18
11-2m	Fault Tree "ADT" Success Criteria	11-18
11-2n	Fault Tree "ADW" Success Criteria	11-19
11-2o	Fault Tree "AD1" Success Criteria	11-19
11-2p	Fault Tree "AD1A" Success Criteria	11-20
11-2q	Fault Tree "ADF" Success Criteria	11-20
11-2r	Fault Tree "ADR" Success Criteria	11-21
11-2s	Fault Tree "ADRA" Success Criteria	11-21
11-2t	Fault Tree "ADU" Success Criteria	11-22
11-2u	Fault Tree "ADUM" Success Criteria	11-22
11-2v	Fault Tree "ADV" Success Criteria	11-23
11-2w	Fault Tree "ADZ" Success Criteria	11-23
11-2x	Fault Tree "ADQLT" Data Summary	11-24
11-2y	Fault Tree "ADTLT" Success Criteria	11-24
11-3	Notes Related to ADS System Fault Tree Assumptions	11-25
11-4	System Dependencies Matrix	11-26
11-5	Component Test Assumptions	11-27
11-6	Component Maintenance Assumptions	11-27
11-7	Failure Probabilities Calculated	11-27
11-8	Operator Action Analysis Summary	11-28
11-9	Common Cause Failures Summary	11-28
11-10	Basic Events Data Base for the ADA System Fault Tree (Sheets 1 – 20)	11-29
12-1	List of System Fault Trees (FT)	12-10
12-2a	Fault Tree "IW2AB" Success Criteria Summary	12-11
12-2b	Fault Tree "IW2ABM" Success Criteria Summary	12-12
12-2c	Fault Tree "IW2ABA" Success Criteria Summary	12-13
12-2d	Fault Tree "IW2ABP" Success Criteria Summary	12-14
12-2e	Fault Tree "IW2ABPM" Success Criteria Summary	12-15

LIST OF TABLES (cont.)

Table No.	Title	Page
12-2f	Fault Tree "IW2ABB" Success Criteria Summary	12-16
12-2g	Fault Tree "IW2ABBM" Success Criteria Summary	12-17
12-2h	Fault Tree "IW1A" Success Criteria Summary	12-18
12-2i	Fault Tree "IW1AM" Success Criteria Summary	12-19
12-2j	Fault Tree "IWF" Success Criteria Summary	12-20
12-2k	Fault Tree "RECIRC" Success Criteria Summary	12-21
12-2l	Fault Tree "RECIRCP" Success Criteria Summary	12-22
12-2m	Fault Tree "RECIRCB" Success Criteria Summary	12-23
12-2n	Fault Tree "RECIRC1" Success Criteria Summary	12-24
12-2o	Fault Tree "RECIRC1P" Success Criteria Summary	12-25
12-2p	Fault Tree "RECIRC1B" Success Criteria Summary	12-26
12-3	System Dependency Matrix	12-27
12-4	Component Test Assumptions	12-28
12-5	Component Maintenance Assumptions	12-28
12-6	Failure Probabilities Calculated	12-29
12-7	Operator Actions and Misposition Analysis Summary	12-29
12-8	Common Cause Failure Analysis Summary	12-30
12-9	Fault Tree Basic Events (Sheets 1 – 11)	12-31
13-1	List of System Fault Trees	13-7
13-2	Fault Tree PCT Success Criteria Summary	13-7
13-3	Notes Related to System Fault Trees Assumptions	13-7
13-4	System Dependency Matrix	13-8
13-5	Component Test Assumptions	13-8
13-6	Component Maintenance Assumptions	13-9
13-7	Operator Actions and Misposition Analysis Summary	13-9
13-8	Common Cause Failure Analysis Summary	13-9
13-9	Fault Tree Basic Events for Passive Containment Cooling System	13-10
14-1	List of System Fault Trees (At-Power)	14-8
14-2.a	Success Criteria Summary Fault Tree "FWT"	14-9
14-2.b	Success Criteria Summary Fault Tree "FWF"	14-10
14-2.c	Success Criteria Summary Fault Tree "SFWT"	14-11
14-2.d	Success Criteria Summary Fault Tree "SFW"	14-12
14-2.e	Success Criteria Summary Fault Tree "SFW1"	14-13
14-2.f	Success Criteria Summary Fault Tree "SFWP"	14-14
14-2.g	Success Criteria Summary Fault Tree "SFWM"	14-15
14-2.h	Success Criteria Summary Fault Tree "SFWA"	14-16
14-2.i	Success Criteria Summary Fault Tree "COND"	14-17
14-2.j	Success Criteria Summary Fault Tree "COND1"	14-18
14-2.k	Success Criteria Summary Fault Tree "CDS"	14-19
14-2.l	Success Criteria Summary Fault Tree "TCCW"	14-20
14-3	Notes to System Fault Tree Assumptions	14-21

LIST OF TABLES (cont.)

Table No.	Title	Page
14-4	System Dependency Matrix (Sheets 1 – 2)	14-22
14-5	Component Test Assumptions	14-24
14-6	Component Maintenance Assumptions	14-25
14-7	Failure Probabilities Calculated in this Section	14-25
14-8	Operator Action Analysis Summary	14-26
14-9	Common Cause Failure (CCF) Summary	14-27
14-10	Fault Tree Basic Event for Main and Startup Feedwater System (Sheets 1 – 9)	14-28
15-1	List of System Fault Trees	15-9
15-2a	Fault Tree CSBOR1 Success Criteria Summary	15-10
15-2b	Fault Tree CVS1 Success Criteria Summary	15-11
15-2c	Fault Tree CSAX Success Criteria Summary	15-12
15-2d	Fault Tree SGHL Success Criteria Summary	15-13
15-2e	Fault Tree CSP Success Criteria Summary	15-14
15-3	Notes Related to System Fault Tree Assumptions	15-15
15-4	System Dependency Matrix	15-16
15-5	Component Test Assumptions	15-17
15-6	Component Maintenance Assumptions	15-18
15-7	Operator Actions and Misposition Analysis Summary	15-19
15-8	Common Cause Failure Analysis Summary	15-20
15-9	Fault Tree Basic Events for Chemical and Volume Control System (Sheets 1 – 4)	15-21
16-1	List of System Fault Trees	16-5
16-2	Fault Tree VLH Success Criteria Summary	16-5
16-3	Notes Related to System Fault Tree Assumptions	16-5
16-4	System Dependency Matrix	16-6
16-5	Component Test Assumptions	16-6
16-6	Component Maintenance Assumptions	16-6
16-7	Operator Actions and Misposition Analysis Summary	16-7
16-8	Common Cause Failure Analysis Summary	16-7
16-9	Fault Tree Basic Events for Containment Hydrogen Control System	16-8
17-1	List of System Fault Trees	17-7
17-2	Fault Tree Success Criteria Summary (Sheets 1 – 2)	17-8
17-3	Notes Related to System Fault Tree Assumptions	17-10
17-4	System Dependencies Matrix	17-11
17-5	Component Test Assumptions	17-12
17-6	Component Maintenance Assumptions	17-12
17-7	Operator Actions and System Misposition Analysis Summary	17-13
17-8	Common Cause Failure Summary	17-13
17-9	Fault Tree Basic Events for Normal Residual Heat Removal System (Sheets 1 – 5)	17-14

LIST OF TABLES (cont.)

Table No.	Title	Page
18-1	List of System Fault Trees	18-6
18-2a	Fault Tree CCN Success Criteria Summary	18-6
18-2b	Fault Tree CCT Success Criteria Summary	18-7
18-2c	Fault Tree CCP Success Criteria Summary	18-7
18-3	Notes Related to System Fault Tree Assumptions	18-8
18-4	System Dependency Matrix	18-8
18-5	Component Test Assumptions	18-9
18-6	Component Maintenance Assumptions	18-9
18-7	Operator Actions and Misposition Analysis Summary	18-10
18-8	Common Cause Failure Analysis Summary	18-10
18-9	Fault Tree Basic Events for Component Cooling Water System (Sheets 1 – 2)	18-11
19-1	List of System Fault Trees	19-6
19-2a	Fault Tree SWN Success Criteria Summary	19-6
19-2b	Fault Tree SWT Success Criteria Summary	19-7
19-2c	Fault Tree SWP Success Criteria Summary	19-7
19-3	Notes Related to System Fault Tree Assumptions	19-8
19-4	System Dependency Matrix	19-9
19-5	Component Test Assumptions	19-10
19-6	Component Maintenance Assumptions	19-10
19-7	Operator Actions and Misposition Analysis Summary	19-11
19-8	Common Cause Failure Analysis Summary	19-11
19-9	Fault Tree Basic Events for Service Water System (Sheets 1 – 4)	19-12
20-1	List of System Fault Trees	20-5
20-2	Fault Tree VWH Success Criteria Summary	20-5
20-3	Notes Related to System Fault Tree Assumptions	20-5
20-4	System Dependency Matrix	20-6
20-5	Component Test Assumptions	20-7
20-6	Component Maintenance Assumptions	20-7
20-7	Operator Actions and Misposition Analysis Summary	20-8
20-8	Common Cause Failure Analysis Summary	20-8
20-9	Fault Tree Basic Events for Central Chilled Water System (Sheets 1 – 2)	20-9
21-1	List of System Fault Trees (Sheets 1 – 3)	21-9
21-2	Fault Tree Success Criteria Summary (Sheets 1 – 16)	21-12
21-3	Notes Related to System Fault Tree Assumptions (Sheets 1 – 3)	21-28
21-4	System Dependency Matrix	21-31
21-5	Component Test Assumptions	21-31
21-6	Component Maintenance Assumptions	21-32
21-7	Operator Actions and Misposition Analysis Summary	21-32
21-8	Common Cause Failure Analysis Summary	21-32
21-9	Fault Tree Basic Events for AC Power System (Sheets 1 – 22)	21-33

LIST OF TABLES (cont.)

Table No.	Title	Page
22-1	List of System Fault Trees (Sheets 1 – 4)	22-6
22-2	Fault Tree Success Criteria Summary (Sheets 1 – 16)	22-10
22-3	Notes Related to System Fault Tree Assumptions	22-26
22-4	Systems Dependency Matrix	22-26
22-5	Component Test Assumptions	22-27
22-6	Component Maintenance Assumptions	22-27
22-7	Operator Actions and Misposition Analysis Summary	22-27
22-8	Common Cause Failure Analysis Summary	22-28
22-9	Fault Tree Basic Events for Class 1E DC and UPS System (Sheets 1 – 12)	22-29
22-10	System Power Requirements/Dependencies (Sheets 1 – 11)	22-41
23-1	List of System Fault Trees (Sheets 1 – 3)	23-6
23-2	Fault Tree Success Criteria Summary (Sheets 1 – 10)	23-9
23-3	Notes Related to System Fault Tree Assumptions	23-19
23-4	System Dependency Matrix	23-19
23-5	Component Test Assumptions	23-20
23-6	Component Maintenance Assumptions	23-20
23-7	Operator Actions and Misposition Analysis Summary	23-20
23-8	Common Cause Failure Analysis Summary	23-21
23-9	Fault Tree Basic Events for Non-Class 1E DC and UPS Power System (Sheets 1 – 20)	23-22
24-1	AP1000 Containment Penetration List (Sheets 1 – 4)	24-7
24-2	Screening Analysis Evaluation (Sheets 1 – 5)	24-16
24-3	Containment Penetrations Not Screened Out for Normal Operation at Power Analysis	24-21
24-4	List of System Fault Trees	24-21
24-5a	Fault Tree CIC Success Criteria Summary	24-22
24-5b	Fault Tree CIA Success Criteria Summary	24-22
24-5c	Fault Tree CIB Success Criteria Summary	24-23
24-6	Notes Related to System Fault Tree Assumptions	24-23
24-7	System Dependency Matrix (Sheets 1 – 3)	24-24
24-8	Component Test Assumptions	24-27
24-9	Component Maintenance Assumptions	24-27
24-10	Operator Actions and Misposition Analysis Summary	24-28
24-11	Common Cause Failure Analysis Summary	24-28
24-12	Fault Tree Basic Events for Containment Isolation System (Sheets 1 – 3)	24-29
25-1	List of System Fault Trees	25-8
25-2a	Fault Tree CAIAIR Success Criteria Summary	25-9
25-2b	Fault Tree CAIR Success Criteria Summary	25-9
25-2c	Fault Tree CAIAIRP Success Criteria Summary	25-10
25-2d	Fault Tree ENDCAIAI Success Criteria Summary	25-10

LIST OF TABLES (cont.)

Table No.	Title	Page
25-2e	Fault Tree ENDCAIAP Success Criteria Summary	25-11
25-2f	Fault Tree CASF Success Criteria Summary	25-11
25-3	Notes Related to System Fault Tree Assumptions	25-12
25-4	System Dependency Matrix	25-12
25-5	Component Test Assumptions	25-12
25-6	Component Maintenance Assumptions	25-13
25-7	Operator Actions and Misposition Analysis Summary	25-13
25-8	Common Cause Failure Analysis Summary	25-13
25-9	Fault Tree Basic Events for Instrument Air Subsystem (Sheets 1 – 4)	25-14
26-1	List of System Fault Trees	26-25
26-2a	Fault Tree RTPMS, and RTPMS1 Success Criteria Summary	26-26
26-2b	Fault Tree RTSTP Success Criteria Summary	26-26
26-2c	Fault Tree RCL Success Criteria Summary	26-27
26-2d.1	Fault Tree RCT Success Criteria Summary	26-27
26-2d.2	Fault Tree RCN Success Criteria Summary	26-28
26-2e	I&C Subtree Success Criteria Summary (Sheets 1 – 98)	26-29
26-3a	PMS I&C Subtree Constructions (Sheets 1 – 19)	26-127
26-3b	Representative PMS I&C Subtree Plot Listing (Sheets 1 – 14)	26-146
26-4	PMS Dependency Matrix (Sheets 1 – 3)	26-160
26-5	PMS Components Test Assumptions	26-163
26-6	Component Maintenance Assumptions	26-163
26-7	Failure Probabilities Calculated in this Section (Sheets 1 – 5)	26-164
26-8	Operator Actions and System Misposition Analysis Summary (Sheets 1 – 3)	26-169
26-9	Common Cause Failure Analysis Summary (Sheets 1 – 2)	26-172
26-10a	Fault Tree Basic Events for Reactor Trip System (Sheets 1 – 4)	26-174
26-10b	Fault Tree Basic Events for the I&C Subsystem (Sheets 1 – 49)	26-178
26-11	Assumed List of I&C Instrumentation (Sheets 1 – 3)	26-227
27-1	List of System Fault Trees	27-9
27-2a	Fault Tree DAS Success Criteria Summary	27-9
27-2b	Fault Tree DAS1 Success Criteria Summary	27-9
27-3	Notes Related to System Fault Tree Assumptions	27-10
27-4	System Dependency Matrix	27-10
27-5	Component Test Assumptions	27-10
27-6	Component Maintenance Assumptions	27-10
27-7	Operator Actions and Misposition Analysis Summary	27-10
27-8	Common Cause Failure Analysis Summary	27-11
27-9	Fault Tree Basic Events for Diverse Actuation System	27-12
28-1	List of System Fault Trees	28-20
28-2	Fault Tree Success Criteria Summary (Sheets 1 – 22)	28-21
28-3	PLS I&C Subtree Constructions (Sheets 1 – 9)	28-43

LIST OF TABLES (cont.)

Table No.	Title	Page
28-4	PLS Dependency Matrix (Sheets 1 – 2)	28-52
28-5	PLS Components Test Assumptions	28-54
28-6	Component Maintenance Assumptions	28-54
28-7	Failure Probabilities Calculated in this Section (Sheets 1 – 3)	28-55
28-8	Operator Actions and System Misposition Analysis Summary (Sheets 1 – 2)	28-58
28-9	Common Cause Failure Analysis Summary (Sheets 1 – 2)	28-60
28-10	Fault Tree Basic Events for I&C Subsystem (Sheets 1 – 68)	28-62
28-11	Assumed List of I&C Instrumentation (Sheets 1 – 3)	28-130
28-12	Assignments of Plant Systems to Logic Cabinets	28-133
28-13	Assignments of Plant Systems to the Control Group Cabinets	28-134
29-1	Electrical Components with Low CCF Rate	29-18
29-2	Common-Cause Failure Calculations (Sheets 1 – 5)	29-19
29-3	Simplification of Q_K/Q_T Equations	29-24
29A-1	Extreme Environmental Conditions (Generic Causes of Dependent Failures) Excerpted from the ANS/IEEE PRA Procedures Guide (NUREG-2300)	29A-11
29A-2	Common-Cause Failures Among Systems	29A-12
29A-3	Common-Cause Failure Equations for MGL Method	29A-13
30-1	AP1000 Human Error Probability Summary Results (Sheets 1 – 16)	30-75
30-2	Manual DAS Actuation (Sheets 1 – 2)	30-91
30-3	Dependency Level Evaluation Summary (Sheets 1 – 14)	30-93
30-4	Dependency Level Evaluation (Sheets 1 – 3)	30-107
30-5	List of Acronyms	30-110
30A-1	Analyst Responsibility Based on Sharp Steps	30A-10
30A-2	Summary of Screening Values	30A-11
30A-3	Example of Operator Action Definition	30A-12
30A-4	HEP Data Bank (Sheets 1 – 5)	30A-13
31-1	Summary of Event Tree Scalar Probabilities	31-12
32-1	Generic Data Base (Sheets 1 – 13)	32-5
32-2	Test and Maintenance Outage Generic Data	32-21
32-3	Test and Maintenance Unavailabilities Used in AP1000 Core Damage Quantification	32-22
32-4	Common Cause Factors (Sheets 1 – 5)	32-23
32-5	SIMON.OUT File (Sheets 1 – 21)	32-29
33-1	Summary of AP1000 System Fault Tree Failure Probabilities (Sheets 1 – 13)	33-7
33-2	Example Accident Sequence Definitions for Large LOCA	33-20
33-3	AP1000 PRA Dominant CDF Cutsets (Sheets 1 – 10)	33-21

LIST OF TABLES (cont.)

Table No.	Title	Page
33-4	AP1000 PRA Dominant CDF Sequences (Sheets 1 – 18)	33-31
33-5	Contribution of Initiating Events to Plant Core Damage Frequency	33-49
33-6	List of Basic Events and Their Descriptions (Sheets 1 – 33)	33-50
34-1	Post-Accident Monitoring Equipment (Sheets 1 – 2)	34-21
34-2	Level 1 Accident Class	34-23
34-3	Summary of Release Categories	34-24
34-4	3BE-1 Event Summary	34-25
34-5	3BE-2 Event Summary	34-26
34-6	3BE-4 Event Summary	34-27
34-7	3BE-5 Event Summary	34-28
34-8	3BE-6 Event Summary	34-29
34-9	3BE-7 Event Summary	34-30
34-10	3BE-3 Event Summary	34-31
34-11	3BL-1 Event Summary	34-32
34-12	3BL-2 Event Summary	34-33
34-13	3BR-1 Event Summary	34-34
34-14	3BR-1a Event Summary	34-35
34-15	3C-1 Event Summary	34-36
34-16	3C-2 Event Summary	34-37
34-17	3D-1 Event Summary	34-38
34-18	3D-2 Event Summary	34-39
34-19	3D-3 Event Summary	34-40
34-20	3D-4 Event Summary	34-41
34-21	6E-1 Event Summary	34-42
34-22	6L-1 Event Summary	34-43
34-23	1AP-1 Event Summary	34-44
34-24	1AP-2 Event Summary	34-45
34-25	1A-1 Event Summary	34-46
34-26	1A-2 Event Summary	34-47
35-1	Functional Definitions of Level 1 Accident Classes	35-21
35-2	CET Initial Conditions for Level 1 Accident Classes	35-22
35-3	Containment Event Tree Nodal Questions	35-23
35-4	Summary of Release Category Definitions	35-24
35-5	Summary of Containment Event Tree Success Criteria (Sheets 1 – 3)	35-25
35-6	Summary of Operator Actions Credited on Containment Event Tree	35-28
36-1	Summary Table for RCS Depressurization (CET Node DP)	36-6
37-1	Summary Table for Containment Isolation (CET Node IS)	37-4
38-1	Summary Table for Reflooding (CET Node RFL)	38-5

LIST OF TABLES (cont.)

Table No.	Title	Page
39-1	Material Inventories in AP1000 Reactor Vessel	39-21
39-2	Summary Table for Reactor Cavity Flooding (CET Node IR)	39-22
39-3	Summary Table for Debris Relocation to Cavity (CET Node VF)	39-22
39A-1	Core and Lower Internals Material Inventories in AP1000 Reactor Vessel	39A-14
39A-2a	Mass and Power Distributions of Debris Layers in Top-Skewed Power Shape Case	39A-15
39A-2b	Mass and Power Distributions of Debris Layers in Chopped Cosine Power Shape Case	39A-16
39A-3a	Results of Top-Skewed Power Shape Case	39A-17
39A-3b	Relocation Results of the Chopped Cosine Power Shape Case	39A-18
39A-4	Material Properties Used in In-Vessel Melting and Relocation Calculation	39A-19
39A-5	Debris Relocation Time Line	39A-20
40-1	Summary of Nodal Failure Probabilities	40-6
40-2	Nominal and Bounding Containment Failure Probability at 24 and 72 Hours	40-6
41-1	Containment Event Tree IG Nodal Failure Probability	41-33
41-2	Containment Event Tree Nodal Failure Probabilities	41-33
41-3	AP600 Scenario Dependencies for Early Detonation Analysis	41-34
41-4	Safety Margin Basis Containment Performance Requirement	41-35
41A-1	Summary of System Assumptions for AP1000 MAAP4.04 Hydrogen Analyses (Sheets 1 – 7)	41A-2
41A-2	Summary of Hydrogen Generation Results MAAP4 Hydrogen Mixing Analyses	41A-10
41A-3	Summary of Early Compartment Gas Composition Results For MAAP4 Hydrogen Mixing Analyses	41A-10
41A-4	Summary of Early Compartment Gas Composition Results for MAAP4 Hydrogen Mixing Analyses	41A-11
41A-5	Summary of Hydrogen Generation Results MAAP4 Hydrogen Mixing Analyses	41A-11
41A-6	Summary of Early Compartment Gas Composition Results for MAAP4 Hydrogen Mixing Analyses	41A-12
41A-7	Summary of Early Compartment Gas Composition Results for MAAP4 Hydrogen Mixing Analyses	41A-12
41A-8	Summary of Hydrogen Generation Results MAAP4 Hydrogen Mixing Analyses	41A-13
41A-9	Summary of Early Compartment Gas Composition Results for MAAP4 Hydrogen Mixing Analyses	41A-14
41A-10	Summary of Early Compartment Gas Composition Results for MAAP4 Hydrogen Mixing Analyses	41A-15
41A-11	Summary of Hydrogen Generation Results MAAP4 Hydrogen Mixing Analyses	41A-15
41A-12	Summary of Early Compartment Gas Composition Results for MAAP4 Hydrogen Mixing Analyses	41A-16

LIST OF TABLES (cont.)

Table No.	Title	Page
41A-13	Summary of Early Compartment Gas Composition Results for MAAP4 Hydrogen Mixing Analyses	41A-16
41A-14	Summary of Hydrogen Generation Results MAAP4 Hydrogen Mixing Analyses	41A-17
41A-15	Summary of Early Compartment Gas Composition Results for MAAP4 Hydrogen Mixing Analyses	41A-17
41A-16	Summary of Early Compartment Gas Composition Results for MAAP4 Hydrogen Mixing Analyses	41A-18
41A-17	Summary of Hydrogen Generation Results MAAP4 Hydrogen Mixing Analyses	41A-18
41A-18	Summary of Early Compartment Gas Composition Results for MAAP4 Hydrogen Mixing Analyses	41A-19
41A-19	Summary of Early Compartment Gas Composition Results for MAAP4 Hydrogen Mixing Analyses	41A-19
41A-20	Summary of Hydrogen Generation Results MAAP4 Hydrogen Mixing Analyses	41A-20
41A-21	Summary of Early Compartment Gas Composition Results for MAAP4 Hydrogen Mixing Analyses	41A-20
41A-22	Summary of Early Compartment Gas Composition Results for MAAP4 Hydrogen Mixing Analyses	41A-21
41A-23	Sequence 1A-3a	41A-22
41A-24	Sequence 1A-4a	41A-23
41A-25	Sequence 1AP-3	41A-24
41A-26	Sequence 1AP-4	41A-25
41A-27	Sequence 3D-1	41A-26
41A-28	Sequence 3D-2	41A-27
41A-29	Sequence 3D-3	41A-28
41A-30	Sequence 3D-5	41A-29
41A-31	Sequence 3BL-1	41A-30
41A-32	Sequence 3BL-2	41A-31
41A-33	Sequence 3C-1	41A-32
41A-34	Sequence 3BR-1a	41A-33
41A-35	Sequence 3BE-1	41A-34
41A-36	Sequence 3BE-2	41A-35
41A-37	Sequence 3BE-4	41A-36
41A-38	Sequence 3BE-5	41A-37
41A-39	Sequence 3BE-6	41A-38
41A-40	Sequence 3BE-8	41A-39
41A-41	Sequence 3BE-9	41A-40
42-1	Parameters Used in the Construction of the AP1000 Conditional Containment Failure Probability Distribution for Containment Temperature = 400°F	42-8
42-2	Parameters Used in the Construction of the AP1000 Conditional Containment Failure Probability Distribution for Containment Temperature = 331°F	42-8
42-3	Cumulative Containment Failure Probability, Temperature = 400°F	42-9
42-4	Cumulative Containment Failure Probability, Temperature = 331°F	42-10

LIST OF TABLES (cont.)

Table No.	Title	Page
43-1	Accident Class Frequencies	43-11
43-2	Boolean Expressions to Calculate Q1-Q29	43-12
43-3	CET Node Probabilities (Sheets 1 – 3)	43-13
43-4	Boolean Expressions for P1-P15	43-16
43-5	Contribution of PDS to LRF (Sheets 1 – 3)	43-17
43-6	Dominant CET Sequences Contributing to LRF (Sheets 1 – 69)	43-20
43-7	Summary of Release Frequency Calculations (Sheets 1 – 2)	43-89
43-8	LRF and Containment Effectiveness by Accident Class	43-91
43-9	Summary of AP1000 LRF Quantification for Internal Events At-Power	43-92
43-10	CET Event Tree Node Importances	43-93
43A-1	AP1000 PRA Dominant CDF Sequences for At-Power Events (Sheets 1 – 6)	43A-2
43A-2	AP1000 PRA PDS Frequencies for At-Power Events	43A-8
43B-1	Calculation of Failure Probability of DP for PDS 6 (Sheets 1 – 7)	43B-2
43C-1	Evaluation of CET-Related Operator Actions	43C-2
44-1	MAAP Model Benchmarks (Sheets 1 – 4)	44-8
45-1	Environmental Release Fractions at 24 Hours After Core Damage Per Release Category	45-5
45-2	Environmental Release Fractions at 72 Hours After Core Damage Per Release Category	45-6
49-1	AP1000 Source Terms from Level 2 Analysis (MAAP)	49-9
49-2	AP1000 Source Terms for Dose Evaluation (MACCS2)	49-10
49-3	Site Boundary Whole Body Dose [Effective Dose Equivalent (EDE)], Sieverts	49-11
49-4	Site Boundary Thyroid Dose, Sieverts	49-12
49-5	Population Whole Body Dose [Effective Dose Equivalent (EDE)], 0-80.5 km Person-Sieverts	49-13
49-6	Site Boundary Red Marrow Dose (Total Acute), Sieverts	49-14
49-7	Dose Summary	49-15
49-8	Site Boundary Whole Body EDE Dose Risk – 24 Hours	49-16
49-9	Site Boundary Whole Body EDE Dose Risk – 72 Hours	49-17
49-10	Population Whole Body EDE Dose Risk – 24 Hours	49-18
49-11	Population Whole Body EDE Dose Risk – 72 Hours	49-19
50-1	Core Damage for At-Power Events Contribution of Initiating Events to Plant Core Damage Frequency	50-15
50-2	Core Damage for At-Power Events Conditional Core Damage Probability of Initiating Events	50-16
50-3	AP1000 PRA Core Damage for At-Power Events Accident Sequence Importances (Sheets 1 – 5)	50-17

LIST OF TABLES (cont.)

Table No.	Title	Page
50-4	Core Damage for At-Power Events End State Importances	50-22
50-5	Common Cause Importances – Risk Decrease (Sheets 1 – 2)	50-23
50-6	Common Cause Importances – Risk Increase (Sheets 1 – 3)	50-25
50-7	Human Error Risk Importances – Risk Decrease (Sheets 1 – 2)	50-28
50-8	Human Error Risk Importances – Risk Increase (Sheets 1 – 2)	50-30
50-9	Component Importances – Risk Decrease (Sheets 1 – 2)	50-32
50-10	Component Importances – Risk Increase (Sheets 1 – 4)	50-34
50-11	List of Systems for System Importance Analyses (Sheets 1 – 4)	50-38
50-12	System Importance Calculation Results (Sheets 1 – 2)	50-42
50-13	Systems Grouped by PRA System Importance	50-44
50-14	Operator Actions in "CMTOT.OUT" File	50-45
50-15	Contribution of IEVs to Core Damage Frequency	50-46
50-16	Case 29 – Top 50 Dominant Cutsets (Sheets 1 – 2)	50-47
50-17	Case 30 – Top 50 Dominant Cutsets (Sheets 1 – 2)	50-49
50-18	Case 31 – Top 50 Dominant Cutsets (Sheets 1 – 3)	50-51
50-19	Passive System Check Valves in "CMTOT.OUT" File	50-54
50-20	Sensitivity Case 36 – Contribution of Initiating Events to CDF	50-55
50-21	Sensitivity Case 36 – Top 50 CDF Cutsets (Sheets 1 – 8)	50-56
50-22	Risk Importances Sorted by Basic Event Identification (Sheets 1 – 13)	50-64
50-23	Risk Importances Sorted by Risk Increase (Sheets 1 – 15)	50-77
50-24	Risk Importances Sorted by Risk Decrease (Sheets 1 – 15)	50-92
50-25	Risk Increases Sorted by Slope (Birnbaum) Importance (Sheets 1 – 13)	50-107
51-1	Summary of Results of AP1000 PRA Uncertainty Analysis for Internal Initiating Events at Power	51-9
51-2	List of Input Cutset Files	51-10
51A-1	Basic Event Uncertainties (Sheets 1 – 32)	51A-3
54-1	AP1000 Initiating Event Frequencies During Shutdown Conditions	54-10
54-2	AP1000 Design Impact on AP600 Shutdown Model	54-11
54-3	Times for Loss of RNS at Mid-loop w/o IRWST Injection	54-12
54-4	AP1000 & AP600 Initiating Event CDF Contributions	54-13
54-5	AP600 Shutdown Level 1 PRA Top 200 Cutsets (Sheets 1 – 25)	54-14
54-6	AP1000 Shutdown Level 1 PRA Top 200 Cutsets (Sheets 1 – 25)	54-39
55-1	Seismic Margin HCLPF Values (Sheets 1 – 4)	55-21
55-2	Basic Event HCLPF Values (Sheets 1 – 3)	55-25
55-3	EQ-IEV-STRUC HCLPF	55-28
55-4	EQ-IEV-RVFA HCLPF	55-28
55-5	EQ-IEV-LLOCA HCLPF	55-29
55-6	EQ-IEV-SLOCA HCLPF	55-29
55-7	EQ-IEV-ATWS HCLPF	55-29

LIST OF TABLES (cont.)

Table No.	Title	Page
56-1	Flooding Analysis Initial Screening Results (Sheets 1 – 3)	56-39
56-2	At-Power Detailed Screening Results (Sheets 1 – 5)	56-42
56-3	At-Power Flooding-Induced Core Damage Frequency Quantification Summary Results (Sheets 1 – 6)	56-47
56-4	Power Upgrade Difference Between AP1000 and AP600	56-53
57-1	AP1000 Fire Areas Excluding the Containment (Sheets 1 – 6)	57-33
57-2	AP1000 Fire Areas in the Containment (Sheets 1 – 2)	57-39
57-3	Fire Ignition Frequencies for AP1000 Fire Areas (Sheets 1 – 4)	57-41
57-4	Fire Ignition Frequencies for AP1000 Containment Fire Area	57-48
57-5	Fire Barrier Failure Probabilities	57-51
57-6	Automatic Suppression System Reliability	57-52
57-7	Summary of Qualitative Evaluation Results – Power Operation – Plant except Containment and Main Control Room (Sheets 1 – 15)	57-53
57-8	Summary of Qualitative Evaluation Results for Containment at Power Operation (Sheets 1 – 4)	57-72
57-9	Summary of Results (Sheets 1 – 5)	57-78
57-10	Distribution of Fire CDF Frequency by Three Major Plant Areas	57-83
57-11	Distribution of Fire CDF Frequency by Eight Plant Areas	57-84
57-12	Fire Areas Sorted by CDF (Sheets 1 – 5)	57-85
57-13	Fire Areas Sorted by CDF/FIEV (Sheets 1 – 5)	57-90
57-14	Credit for Manual Fire Suppression	57-95
57-15	Reduction of Hot Short Probability	57-96
57-16	Increase of Hot Short Probability	57-97
57-17	Sensitivity to Human Actions	57-98
57-18	Sensitivity to Fire Ignition Frequencies	57-99
57-19	Sensitivity to Actuation by DAS	57-100
57-20	Plant Fire CDF Without Hot Shorts	57-101
57-21	Contribution of the Plant Areas to CDF	57-102
57-22	Dominant Fire Scenarios (Sheets 1 – 4)	57-103
57A-1	Summary of Scenario CCDPs (Sheets 1 – 5)	57A-7
57A-2	AP1000 Base Case CCDPs for Initiating Events	57A-12
57A-3	DAS-ACT Fault Tree Cutsets Before Subtree Reduction	57A-13
57A-4	DAS-ACT Fault Tree Cutsets After Subtree Reduction (Sheets 1 – 10)	57A-14
57A-5	DAS-ACT Fault Tree Cutsets After Subtree Reduction (Sheets 1 – 9)	57A-24
57A-6	AP1000 Fire PRA Scenario CCDPs for Over-Conservative Cases (Sheets 1 – 3)	57A-33
57C-1	Data Used in Event Tree Scenario Frequency Calculations (Sheets 1 – 5)	57C-2
57C-2	CCDPs Used in Fire Event Trees (Sheets 1 – 5)	57C-7

LIST OF TABLES (cont.)

Table No.	Title	Page
59-1	Contribution of Initiating Events to Core Damage	59-39
59-2	Conditional Core Damage Probability of Initiating Events	59-40
59-3	Internal Initiating Events at Power Dominant Core Damage Sequences (Sheets 1 – 4)	59-41
59-4	Sequence 1 – Safety Injection Line Break Dominant Cutsets (SI-LB-07) (Sheets 1 – 3)	59-45
59-5	Sequence 2 – Large LOCA Dominant Cutsets (LLOCA-09)	59-48
59-6	Sequence 3 – Spurious ADS Actuation Dominant Cutsets (SPADS-08) (Sheets 1 – 3)	59-49
59-7	Sequence 4 – Safety Injection Line Break Dominant Cutsets (SI-LB-08) (Sheets 1 – 3)	59-52
59-8	Sequence 5 – Reactor Vessel Rupture Cutset (RV-RP-02)	59-55
59-9	Sequence 6 – Small LOCA Dominant Cutsets (SLOCA-05) (Sheets 1 – 3)	59-56
59-10	Sequence 7 – Medium LOCA Dominant Cutsets (MLOCA-05) (Sheets 1 – 3)	59-59
59-11	Sequence 8 – Small LOCA Dominant Cutsets (SLOCA-12) (Sheets 1 – 3)	59-62
59-12	Sequence 9 – Medium LOCA Dominant Cutsets (MLOCA-12) (Sheets 1 – 3)	59-65
59-13	Sequence 10 – Spurious ADS Actuation Dominant Cutsets (SPADS-09) (Sheets 1 – 3)	59-68
59-14	Typical System Failure Probabilities, Showing Higher Reliabilities for Safety Systems	59-71
59-15	Summary of AP1000 PRA Results	59-72
59-16	Site Boundary Whole Body EDE Dose Risk – 24 Hours	59-73
59-17	Comparison of AP1000 PRA Results to Risk Goals	59-74
59-18	AP1000 PRA-Based Insights (Sheets 1 –24)	59-75

LIST OF FIGURES

Figure No.	Title	Page
2-1	Core Damage Logic Diagram for Internal Initiators (Sheets 1 – 4)	2-47
4A-1	Example Event Tree for Illustration of Terminology	4A-19
4A-2	Functional Event Tree	4A-20
4A-3	Illustration of A/B and A&B Notation	4A-21
4A-4	Illustration of Consequential Event and ATWS End States	4A-22
4A-5	AP1000 PRA Transients Template Event Tree (Sheets 1 – 3)	4A-23
4A-6	AP1000 PRA Small LOCA Template Event Tree (Sheets 1 – 2)	4A-26
4B-1	AP1000 Large LOCA Event Tree (Sheets 1 – 2)	4B-2
4B-2	AP1000 Large Spurious ADS Actuation Event Tree (Sheets 1 – 2)	4B-4
4B-3	AP1000 Medium LOCA Event Tree (Sheets 1 – 4)	4B-6
4B-4	AP1000 CMT Line Break Event Tree (Sheets 1 – 4)	4B-10
4B-5	AP1000 SI Line Break Event Tree (Sheets 1 – 3)	4B-14
4B-6	AP1000 Small LOCA Event Tree (Sheets 1 – 6)	4B-17
4B-7	AP1000 RCS Leak Event Tree	4B-23
4B-8	AP1000 Passive RHR Tube Rupture Event Tree	4B-24
4B-9a	AP1000 Steam Generator Tube Rupture Event Tree (Sheets 1 – 3)	4B-25
4B-9b	AP1000 SGTR Continues Event Tree (Sheets 1 – 6)	4B-28
4B-10	AP1000 Reactor Vessel Rupture Event Tree	4B-34
4B-11	AP1000 Interfacing Systems LOCA Event Tree	4B-35
4B-12	AP1000 Transients With Main Feedwater Event Tree (Sheets 1 – 4)	4B-36
4B-13	AP1000 Loss of Reactor Coolant Flow Event Tree (Sheets 1 – 4)	4B-40
4B-14	AP1000 Loss of Feedwater to One SG Tree (Sheets 1 – 4)	4B-44
4B-15	AP1000 Transients With Core Power Excursion Event Tree (Sheets 1 – 4)	4B-48
4B-16	AP1000 Transients With Loss of CCW/SW Event Tree (Sheets 1 – 4)	4B-52
4B-17	AP1000 Loss of MFW Event Tree (Sheets 1 – 4)	4B-56
4B-18	AP1000 Loss of Condenser Event Tree (Sheets 1 – 4)	4B-60
4B-19	AP1000 Loss of Main Compressed Air Event Tree (Sheets 1 – 4)	4B-64
4B-20	AP1000 Loss of Offsite Power Event Tree (Sheets 1 – 7)	4B-68
4B-21	Main Steam Line Break Downstream of MSIVs Event Tree (Sheets 1 – 5)	4B-75
4B-22	Main Steam Line Break Upstream of MSIVs Event Tree (Sheets 1 – 9)	4B-80
4B-23	Stuck Open Secondary Side Safety Valve Event Tree (Sheets 1 – 5)	4B-89
4B-24a	ATWS Precursor Without Main Feedwater	4B-94
4B-24b	AP1000 ATWS Precursor Without Main Feedwater Continues Event Tree (Sheets 1 – 6)	4B-95
4B-25	ATWS Precursor With SI (Sheets 1 – 6)	4B-101
4B-26	ATWS Precursor With MFW (Sheets 1 – 4)	4B-107
7-1	Power/Control Model for Large Loads (6900-vac/480-vac Pumps, Fans, and Motors)	7-33
7-2	Power/Control Model for Motor-Operated Valves	7-35
7-3	Power/Control Model for Air-Operated Valves	7-37

LIST OF FIGURES (cont.)

Figure No.	Title	Page
7-4	Power/Control Model for Variable Speed Motor	7-39
7-5	An Illustration of Fault Tree Basic Events for a Pump Following the Model Given in Figure 7-1	7-41
8-1	PRHR – Simplified Piping and Instrumentation Diagram	8-23
8-2	PRHR – Simplified Valve Control Diagram	8-25
9-1	Passive Core Cooling System Simplified Sketch	9-24
9-2	Passive Core Cooling System Piping and Instrumentation Diagram	9-25
10-1	Passive Core Cooling System – Accumulator Subsystem	10-12
11-1	Automatic Depressurization System Simplified Piping and Instrumentation Diagram	11-49
12-1	Simplified Piping & Instrumentation Diagram of the IRWST/Gravity Injection Subsystem	12-42
13-1	Passive Containment Cooling System Sketch	13-11
15-1	Chemical and Volume Control System Piping and Instrumentation Diagram (Sheets 1 – 2)	15-25
17-1	Normal Residual Heat Removal System Sketch	17-19
18-1	Component Cooling Water System Piping and Instrumentation Diagram	18-13
19-1	Service Water System Piping and Instrumentation Diagram	19-17
20-1	Central Chilled Water Low-Capacity Subsystem Piping and Instrumentation Diagram (Sheets 1 – 2)	20-11
21-1	AC Power System One-Line Diagram	21-55
22-1	Class 1E DC System One-Line Diagram (Sheets 1 – 2)	22-53
22-2	Class 1E UPS One-Line Diagram	22-57
25-1	Compressed & Instrument Air System Piping and Instrumentation Diagram	25-19
29-1	IRWST Valve Configuration	29-25
30-1	Human Reliability Analysis Quantification Model	30-111
30A-1	Links Between SHARP Steps	30A-18

LIST OF FIGURES (cont.)

Figure No.	Title	Page
34-1	Case 3BE-1: Reactor Coolant System and Steam Generator Pressure DVI Line Break, Containment Water Level	34-48
34-2	Case 3BE-1: ADS Stage 4 Flow Rates DVI Line Break, Containment Water Level	34-48
34-3	Case 3BE-1: Accumulator/CMT Water Mass DVI Line Break, Containment Water Level	34-49
34-4	Case 3BE-1: IRWST Injection Flow Rate DVI Line Break, Containment Water Level	34-49
34-5	Case 3BE-1: Break Flow Rate DVI Line Break, Containment Water Level	34-50
34-6	Case 3BE-1: Reactor Vessel Water Level DVI Line Break, Containment Water Level	34-50
34-7	Case 3BE-1: Core Temperatures DVI Line Break, Containment Water Level	34-51
34-8	Case 3BE-1: Containment Water Pool Elevations DVI Line Break, Containment Water Level	34-51
34-9	Case 3BE-1: Containment Pressure DVI Line Break, Containment Water Level	34-52
34-10	Case 3BE-1: Containment Gas Temperatures DVI Line Break, Containment Water Level	34-52
34-11	Case 3BE-1: Core Mass DVI Line Break, Containment Water Level	34-53
34-12	Case 3BE-1: Reactor Pressure Vessel to Cavity Water Heat Transfer DVI Line Break, Containment Water Level	34-53
34-13	Case 3BE-1: In-Vessel Hydrogen Generation DVI Line Break, Containment Water Level	34-54
34-14	Case 3BE-1: Mass Fraction of CsI Released to Containment DVI Line Break, Containment Water Level	34-54
34-15	Case 3BE-1: Mass Fraction of Noble Gases Released to Environment DVI Line Break, Containment Water Level	34-55
34-16	Case 3BE-1: Mass Fraction of Fission Products Released to Environment DVI Line Break, Containment Water Level	34-55
34-17	Case 3BE-1: Mass Fraction of SrO Released to Environment DVI Line Break, Containment Water Level	34-56
34-18	Case 3BE-2: Reactor Coolant System and Steam Generator Pressure DVI Line Break, Fail Gravity Injection, No DVI Flooding	34-56
34-19	Case 3BE-2: ADS Stage 4 Flow Rates DVI Line Break, Fail Gravity Injection, No DVI Flooding	34-57
34-20	Case 3BE-2: Accumulator/CMT Water Mass DVI Line Break, Fail Gravity Injection, No DVI Flooding	34-57
34-21	Case 3BE-2: IRWST Injection Flow Rate DVI Line Break, Fail Gravity Injection, No DVI Flooding	34-58
34-22	Case 3BE-2: Break Flow Rate DVI Line Break, Fail Gravity Injection, No DVI Flooding	34-58

LIST OF FIGURES (cont.)

Figure No.	Title	Page
34-23	Case 3BE-2: Reactor Vessel Water Level DVI Line Break, Fail Gravity Injection, No DVI Flooding	34-59
34-24	Case 3BE-2: Core Temperatures DVI Line Break, Fail Gravity Injection, No DVI Flooding	34-59
34-25	Case 3BE-2: Containment Water Pool Elevations DVI Line Break, Fail Gravity Injection, No DVI Flooding	34-60
34-26	Case 3BE-2: Containment Pressure DVI Line Break, Fail Gravity Injection, No DVI Flooding	34-60
34-27	Case 3BE-2: Containment Gas Temperatures DVI Line Break, Fail Gravity Injection, No DVI Flooding	34-61
34-28	Case 3BE-2: Core Mass DVI Line Break, Fail Gravity Injection, No DVI Flooding	34-61
34-29	Case 3BE-2: Reactor Pressure Vessel to Cavity Water Heat Transfer DVI Line Break, Fail Gravity Injection, No DVI Flooding	34-62
34-30	Case 3BE-2: In-Vessel Hydrogen Generation DVI Line Break, Fail Gravity Injection, No DVI Flooding	34-62
34-31	Case 3BE-2: Mass Fraction of CsI Released to Containment DVI Line Break, Fail Gravity Injection, No DVI Flooding	34-63
34-32	Case 3BE-2: Mass Fraction of Noble Gases Released to Environment DVI Line Break, Fail Gravity Injection, No DVI Flooding	34-63
34-33	Case 3BE-2: Mass Fraction of Fission Products Released to Environment DVI Line Break, Fail Gravity Injection, No DVI Flooding	34-64
34-34	Case 3BE-2: Mass Fraction of SrO Released to Environment DVI Line Break, Fail Gravity Injection, No DVI Flooding	34-64
34-35	Case 3BE-4: Reactor Coolant System and Steam Generator Pressure Spurious ADS, Failed Gravity Injection	34-65
34-36	Case 3BE-4: ADS Stage 4 Flow Rates Spurious ADS, Failed Gravity Injection	34-65
34-37	Case 3BE-4: Accumulator/CMT Water Mass Spurious ADS, Failed Gravity Injection	34-66
34-38	Case 3BE-4: IRWST Injection Flow Rate Spurious ADS, Failed Gravity Injection	34-66
34-39	Case 3BE-4: Break Flow Rate Spurious ADS, Failed Gravity Injection	34-67
34-40	Case 3BE-4: Reactor Vessel Water Level Spurious ADS, Failed Gravity Injection	34-67
34-41	Case 3BE-4: Core Temperatures Spurious ADS, Failed Gravity Injection	34-68
34-42	Case 3BE-4: Containment Water Pool Elevations Spurious ADS, Failed Gravity Injection	34-68
34-43	Case 3BE-4: Containment Pressure Spurious ADS, Failed Gravity Injection	34-69
34-44	Case 3BE-4: Containment Gas Temperatures Spurious ADS, Failed Gravity Injection	34-69
34-45	Case 3BE-4: Core Mass Spurious ADS, Failed Gravity Injection	34-70

LIST OF FIGURES (cont.)

Figure No.	Title	Page
34-46	Case 3BE-4: Reactor Pressure Vessel to Cavity Water Heat Transfer Spurious ADS, Failed Gravity Injection	34-70
34-47	Case 3BE-4: In-Vessel Hydrogen Generation Spurious ADS, Failed Gravity Injection	34-71
34-48	Case 3BE-4: Mass Fraction of CsI Released to Containment Spurious ADS, Failed Gravity Injection	34-71
34-49	Case 3BE-4: Mass Fraction of Noble Gases Released to Environment Spurious ADS, Failed Gravity Injection	34-72
34-50	Case 3BE-4: Mass Fraction of Fission Products Released to Environment Spurious ADS, Failed Gravity Injection	34-72
34-51	Case 3BE-4: Mass Fraction of SrO Released to Environment Spurious ADS, Failed Gravity Injection	34-73
34-52	Case 3BE-5: Reactor Coolant System and Steam Generator Pressure SBLOCA with Failed Gravity Injection	34-73
34-53	Case 3BE-5: ADS Stage 4 Flow Rates SBLOCA with Failed Gravity Injection	34-74
34-54	Case 3BE-5: Accumulator/CMT Water Mass SBLOCA with Failed Gravity Injection	34-74
34-55	Case 3BE-5: IRWST Injection Flow Rate SBLOCA with Failed Gravity Injection	34-75
34-56	Case 3BE-5: Break Flow Rate SBLOCA with Failed Gravity Injection	34-75
34-57	Case 3BE-5: Reactor Vessel Water Level SBLOCA with Failed Gravity Injection	34-76
34-58	Case 3BE-5: Core Temperatures SBLOCA with Failed Gravity Injection	34-76
34-59	Case 3BE-5: Containment Water Pool Elevations SBLOCA with Failed Gravity Injection	34-77
34-60	Case 3BE-5: Containment Pressure SBLOCA with Failed Gravity Injection	34-77
34-61	Case 3BE-5: Containment Gas Temperature SBLOCA with Failed Gravity Injection	34-78
34-62	Case 3BE-5: Core Mass SBLOCA with Failed Gravity Injection	34-78
34-63	Case 3BE-5: Reactor Pressure Vessel to Cavity Water Heat Transfer SBLOCA with Failed Gravity Injection	34-79
34-64	Case 3BE-5: In-Vessel Hydrogen Generation SBLOCA with Failed Gravity Injection	34-79
34-65	Case 3BE-5: Mass Fraction of CsI Released to Containment SBLOCA with Failed Gravity Injection	34-80
34-66	Case 3BE-5: Mass Fraction of Noble Gases Released to Environment SBLOCA with Failed Gravity Injection	34-80
34-67	Case 3BE-5: Mass Fraction of Fission Products Released to Environment SBLOCA with Failed Gravity Injection	34-81
34-68	Case 3BE-5: Mass Fraction of SrO Released to Environment SBLOCA with Failed Gravity Injection	34-81

LIST OF FIGURES (cont.)

Figure No.	Title	Page
34-69	Case 3BE-6: Reactor Coolant System and Steam Generator Pressure SBLOCA with Failed Gravity Injection	34-82
34-70	Case 3BE-6: ADS Stage 4 Flow Rates SBLOCA with Failed Gravity Injection	34-82
34-71	Case 3BE-6: Accumulator/CMT Water Mass SBLOCA with Failed Gravity Injection	34-83
34-72	Case 3BE-6: IRWST Injection Flow Rate SBLOCA with Failed Gravity Injection	34-83
34-73	Case 3BE-6: Break Flow Rate SBLOCA with Failed Gravity Injection	34-84
34-74	Case 3BE-6: Reactor Vessel Water Level SBLOCA with Failed Gravity Injection	34-84
34-75	Case 3BE-6: Core Temperatures SBLOCA with Failed Gravity Injection	34-85
34-76	Case 3BE-6: Containment Water Pool Elevations SBLOCA with Failed Gravity Injection	34-85
34-77	Case 3BE-6: Containment Pressure SBLOCA with Failed Gravity Injection	34-86
34-78	Case 3BE-6: Containment Gas Temperature SBLOCA with Failed Gravity Injection	34-86
34-79	Case 3BE-6: Core Mass SBLOCA with Failed Gravity Injection	34-87
34-80	Case 3BE-6: Reactor Pressure Vessel to Cavity Water Heat Transfer SBLOCA with Failed Gravity Injection	34-87
34-81	Case 3BE-6: In-Vessel Hydrogen Generation SBLOCA with Failed Gravity Injection	34-88
34-82	Case 3BE-6: Mass Fraction of CsI Released to Containment SBLOCA with Failed Gravity Injection	34-88
34-83	Case 3BE-6: Mass Fraction of Noble Gases Released to Environment SBLOCA with Failed Gravity Injection	34-89
34-84	Case 3BE-6: Mass Fraction of Fission Products Released to Environment SBLOCA with Failed Gravity Injection	34-89
34-85	Case 3BE-6: Mass Fraction of SrO Released to Environment SBLOCA with Failed Gravity Injection	34-90
34-86	Case 3BE-7: Reactor Coolant System and Steam Generator Pressure SBLOCA with Failed Gravity Injection	34-90
34-87	Case 3BE-7: ADS Stage 4 Flow Rates SBLOCA with Failed Gravity Injection	34-91
34-88	Case 3BE-7: Accumulator/CMT Water Mass SBLOCA with Failed Gravity Injection	34-91
34-89	Case 3BE-7: IRWST Injection Flow Rate SBLOCA with Failed Gravity Injection	34-92
34-90	Case 3BE-7: Break Flow Rate SBLOCA with Failed Gravity Injection	34-92
34-91	Case 3BE-7: Reactor Vessel Water Level SBLOCA with Failed Gravity Injection	34-93
34-92	Case 3BE-7: Core Temperatures SBLOCA with Failed Gravity Injection	34-93

LIST OF FIGURES (cont.)

Figure No.	Title	Page
34-93	Case 3BE-7: Containment Water Pool Elevations SBLOCA with Failed Gravity Injection	34-94
34-94	Case 3BE-7: Containment Pressure SBLOCA with Failed Gravity Injection	34-94
34-95	Case 3BE-7: Containment Gas Temperature SBLOCA with Failed Gravity Injection	34-95
34-96	Case 3BE-7: Core Mass SBLOCA with Failed Gravity Injection	34-95
34-97	Case 3BE-7: Reactor Pressure Vessel to Cavity Water Heat Transfer SBLOCA with Failed Gravity Injection	34-96
34-98	Case 3BE-7: In-Vessel Hydrogen Generation SBLOCA with Failed Gravity Injection	34-96
34-99	Case 3BE-7: Mass Fraction of CsI Released to Containment SBLOCA with Failed Gravity Injection	34-97
34-100	Case 3BE-7: Mass Fraction of Noble Gases Released to Environment SBLOCA with Failed Gravity Injection	34-97
34-101	Case 3BE-7: Mass Fraction of Fission Products Released to Environment SBLOCA with Failed Gravity Injection	34-98
34-102	Case 3BE-7: Mass Fraction of SrO Released to Environment SBLOCA with Failed Gravity Injection	34-98
34-103	Case 3BE-3: Reactor Coolant System and Steam Generator Pressure DVI Line Break, Failed Gravity Injection, No PXS Flooding	34-99
34-104	Case 3BE-3: ADS Stage 4 Flow Rate DVI Line Break, Failed Gravity Injection, No PXS Flooding	34-99
34-105	Case 3BE-3: Accumulator/CMT Water Mass DVI Line Break, Failed Gravity Injection, No PXS Flooding	34-100
34-106	Case 3BE-3: IRWST Injection Flow Rate DVI Line Break, Failed Gravity Injection, No PXS Flooding	34-100
34-107	Case 3BE-3: Break Flow Rate DVI Line Break, Failed Gravity Injection, No PXS Flooding	34-101
34-108	Case 3BE-3: Reactor Vessel Water Level DVI Line Break, Failed Gravity Injection, No PXS Flooding	34-101
34-109	Case 3BE-3: Core Temperatures DVI Line Break, Failed Gravity Injection, No PXS Flooding	34-102
34-110	Case 3BE-3: Containment Water Pool Elevations DVI Line Break, Failed Gravity Injection, No PXS Flooding	34-102
34-111	Case 3BE-3: Containment Pressure DVI Line Break, Failed Gravity Injection, No PXS Flooding	34-103
34-112	Case 3BE-3: Containment Gas Temperature DVI Line Break, Failed Gravity Injection, No PXS Flooding	34-103
34-113	Case 3BE-3: Core Mass DVI Line Break, Failed Gravity Injection, No PXS Flooding	34-104
34-114	Case 3BE-3: Reactor Pressure Vessel to Cavity Water Heat Transfer DVI Line Break, Failed Gravity Injection, No PXS Flooding	34-104

LIST OF FIGURES (cont.)

Figure No.	Title	Page
34-115	Case 3BE-3: In-Vessel Hydrogen Generation DVI Line Break, Failed Gravity Injection, No PXS Flooding	34-105
34-116	Case 3BE-3: Mass Fraction of CsI Released to Containment DVI Line Break, Failed Gravity Injection, No PXS Flooding	34-105
34-117	Case 3BE-3: Mass Fraction of Noble Gases Released to Environment DVI Line Break, Failed Gravity Injection, No PXS Flooding	34-106
34-118	Case 3BE-3: Mass Fraction of Fission Products Released to Environment DVI Line Break, Failed Gravity Injection, No PXS Flooding	34-106
34-119	Case 3BE-3: Mass Fraction of SrO Released to Environment DVI Line Break, Failed Gravity Injection, No PXS Flooding	34-107
34-120	Case 3BL-1: Reactor Coolant System and Steam Generator Pressure SBLOCA with Failed Gravity Injection	34-107
34-121	Case 3BL-1: ADS Stage 4 Flow Rates SBLOCA with Failed Gravity Injection	34-108
34-122	Case 3BL-1: Accumulator/CMT Water Mass SBLOCA with Failed Gravity Injection	34-108
34-123	Case 3BL-1: IRWST Injection Flow Rate SBLOCA with Failed Gravity Injection	34-109
34-124	Case 3BL-1: Break Flow Rate SBLOCA with Failed Gravity Injection	34-109
34-125	Case 3BL-1: Reactor Vessel Water Level SBLOCA with Failed Gravity Injection	34-110
34-126	Case 3BL-1: Core Temperatures SBLOCA with Failed Gravity Injection	34-110
34-127	Case 3BL-1: Containment Water Pool Elevations SBLOCA with Failed Gravity Injection	34-111
34-128	Case 3BL-1: Containment Pressure SBLOCA with Failed Gravity Injection	34-111
34-129	Case 3BL-1: Containment Gas Temperature SBLOCA with Failed Gravity Injection	34-112
34-130	Case 3BL-1: Core Mass SBLOCA with Failed Gravity Injection	34-112
34-131	Case 3BL-1: Reactor Pressure Vessel to Cavity Water Heat Transfer SBLOCA with Failed Gravity Injection	34-113
34-132	Case 3BL-1: In-Vessel Hydrogen Generation SBLOCA with Failed Gravity Injection	34-113
34-133	Case 3BL-1: Mass Fraction of CsI Released to Containment SBLOCA with Failed Gravity Injection	34-114
34-134	Case 3BL-1: Mass Fraction of Noble Gases Released to Environment SBLOCA with Failed Gravity Injection	34-114
34-135	Case 3BL-1: Mass Fraction of Fission Products Released to Environment SBLOCA with Failed Gravity Injection	34-115
34-136	Case 3BL-1: Mass Fraction of SrO Released to Environment SBLOCA with Failed Gravity Injection	34-115
34-137	Case 3BL-2: Reactor Coolant System and Steam Generator Pressure DVI Line Break with Failed Gravity Injection	34-116

LIST OF FIGURES (cont.)

Figure No.	Title	Page
34-138	Case 3BL-2: ADS Stage 4 Flow Rates DVI Line Break with Failed Gravity Injection	34-116
34-139	Case 3BL-2: Accumulator/CMT Water Mass DVI Line Break with Failed Gravity Injection	34-117
34-140	Case 3BL-2: IRWST Injection Flow Rate DVI Line Break with Failed Gravity Injection	34-117
34-141	Case 3BL-2: Break Flow Rate DVI Line Break with Failed Gravity Injection	34-118
34-142	Case 3BL-2: Reactor Vessel Water Level DVI Line Break with Failed Gravity Injection	34-118
34-143	Case 3BL-2: Core Temperatures DVI Line Break with Failed Gravity Injection	34-119
34-144	Case 3BL-2: Containment Water Pool Elevations DVI Line Break with Failed Gravity Injection	34-119
34-145	Case 3BL-2: Containment Pressure DVI Line Break with Failed Gravity Injection	34-120
34-146	Case 3BL-2: Containment Gas Temperature DVI Line Break with Failed Gravity Injection	34-120
34-147	Case 3BL-2: Core Mass DVI Line Break with Failed Gravity Injection	34-121
34-148	Case 3BL-2: Reactor Pressure Vessel to Cavity Water Heat Transfer DVI Line Break with Failed Gravity Injection	34-121
34-149	Case 3BL-2: In-Vessel Hydrogen Generation DVI Line Break with Failed Gravity Injection	34-122
34-150	Case 3BL-2: Mass Fraction of CsI Released to Containment DVI Line Break with Failed Gravity Injection	34-122
34-151	Case 3BL-2: Mass Fraction of Noble Gases Released to Environment DVI Line Break with Failed Gravity Injection	34-123
34-152	Case 3BL-2: Mass Fraction of Fission Products Released to Environment DVI Line Break with Failed Gravity Injection	34-123
34-153	Case 3BL-2: Mass Fraction of SrO Released to Environment DVI Line Break with Failed Gravity Injection	34-124
34-154	Case 3BR-1: Reactor Coolant System and Steam Generator Pressure CL LBLOCA to Loop Compartment 2/2 Gravity Injection/Recirculation Lines	34-124
34-155	Case 3BR-1: ADS Stage 4 Flow Rates CL LBLOCA to Loop Compartment 2/2 Gravity Injection/Recirculation Lines	34-125
34-156	Case 3BR-1: Accumulator/CMT Water Mass CL LBLOCA to Loop Compartment 2/2 Gravity Injection/Recirculation Lines	34-125
34-157	Case 3BR-1: IRWST Injection Flow Rate CL LBLOCA to Loop Compartment 2/2 Gravity Injection/Recirculation Lines	34-126
34-158	Case 3BR-1: Break Flow Rate CL LBLOCA to Loop Compartment 2/2 Gravity Injection/Recirculation Lines	34-126
34-159	Case 3BR-1: Reactor Vessel Water Level CL LBLOCA to Loop Compartment 2/2 Gravity Injection/Recirculation Lines	34-127

LIST OF FIGURES (cont.)

Figure No.	Title	Page
34-160	Case 3BR-1: Core Temperatures CL LBLOCA to Loop Compartment 2/2 Gravity Injection/Recirculation Lines	34-127
34-161	Case 3BR-1: Containment Water Pool Elevations CL LBLOCA to Loop Compartment 2/2 Gravity Injection/Recirculation Lines	34-128
34-162	Case 3BR-1: Containment Pressure CL LBLOCA to Loop Compartment 2/2 Gravity Injection/Recirculation Lines	34-128
34-163	Case 3BR-1: Containment Gas Temperature CL LBLOCA to Loop Compartment 2/2 Gravity Injection/Recirculation Lines	34-129
34-164	Case 3BR-1: Core Mass CL LBLOCA to Loop Compartment 2/2 Gravity Injection/Recirculation Lines	34-129
34-165	Case 3BR-1: Reactor Pressure Vessel to Cavity Water Heat Transfer CL LBLOCA to Loop Compartment 2/2 Gravity Injection/Recirculation Lines	34-130
34-166	Case 3BR-1: In-Vessel Hydrogen Generation CL LBLOCA to Loop Compartment 2/2 Gravity Injection/Recirculation Lines	34-130
34-167	Case 3BR-1: Mass Fraction of CsI Released to Containment CL LBLOCA to Loop Compartment 2/2 Gravity Injection/Recirculation Lines	34-131
34-168	Case 3BR-1: Mass Fraction of Noble Gases Released to Environment CL LBLOCA to Loop Compartment 2/2 Gravity Injection/Recirculation Lines	34-131
34-169	Case 3BR-1: Mass Fraction of Fission Products Released to Environment CL LBLOCA to Loop Compartment 2/2 Gravity Injection/Recirculation Lines	34-132
34-170	Case 3BR-1: Mass Fraction of SrO Released to Environment CL LBLOCA to Loop Compartment 2/2 Gravity Injection/Recirculation Lines	34-132
34-171	Case 3BR-1a: Reactor Coolant System and Steam Generator Pressure CL LBLOCA with Failed Accumulators	34-133
34-172	Case 3BR-1a: ADS Stage 4 Flow Rates CL LBLOCA with Failed Accumulators	34-133
34-173	Case 3BR-1a: Accumulator/CMT Water Mass CL LBLOCA with Failed Accumulators	34-134
34-174	Case 3BR-1a: IRWST Injection Flow Rate CL LBLOCA with Failed Accumulators	34-134
34-175	Case 3BR-1a: Break Flow Rate CL LBLOCA with Failed Accumulators	34-135
34-176	Case 3BR-1a: Reactor Vessel Water Level CL LBLOCA with Failed Accumulators	34-135
34-177	Case 3BR-1a: Core Temperatures CL LBLOCA with Failed Accumulators	34-136
34-178	Case 3BR-1a: Containment Water Pool Elevations CL LBLOCA with Failed Accumulators	34-136
34-179	Case 3BR-1a: Containment Pressure CL LBLOCA with Failed Accumulators	34-137

LIST OF FIGURES (cont.)

Figure No.	Title	Page
34-180	Case 3BR-1a: Containment Gas Temperature CL LBLOCA with Failed Accumulators	34-137
34-181	Case 3BR-1a: Core Mass CL LBLOCA with Failed Accumulators	34-138
34-182	Case 3BR-1a: Reactor Pressure Vessel to Cavity Water Heat Transfer CL LBLOCA with Failed Accumulators	34-138
34-183	Case 3BR-1a: In-Vessel Hydrogen Generation CL LBLOCA with Failed Accumulators	34-139
34-184	Case 3BR-1a: Mass Fraction of CsI Released to Containment CL LBLOCA with Failed Accumulators	34-139
34-185	Case 3BR-1a: Mass Fraction of Noble Gases Released to Environment CL LBLOCA with Failed Accumulators	34-140
34-186	Case 3BR-1a: Mass Fraction of Fission Products Released to Environment CL LBLOCA with Failed Accumulators	34-140
34-187	Case 3BR-1a: Mass Fraction of SrO Released to Environment CL LBLOCA with Failed Accumulators	34-141
34-188	Case 3C-1: Reactor Coolant System and Steam Generator Pressure Vessel Rupture	34-141
34-189	Case 3C-1: ADS Stage 4 Flow Rates Vessel Rupture	34-142
34-190	Case 3C-1: Accumulator/CMT Water Mass Vessel Rupture	34-142
34-191	Case 3C-1: IRWST Injection Flow Rate Vessel Rupture	34-143
34-192	Case 3C-1: Break Flow Rate Vessel Rupture	34-143
34-193	Case 3C-1: Reactor Vessel Water Level Vessel Rupture	34-144
34-194	Case 3C-1: Core Temperatures Vessel Rupture	34-144
34-195	Case 3C-1: Containment Water Pool Elevations Vessel Rupture	34-145
34-196	Case 3C-1: Containment Pressure Vessel Rupture	34-145
34-197	Case 3C-1: Containment Gas Temperature Vessel Rupture	34-146
34-198	Case 3C-1: Core Mass Vessel Rupture	34-146
34-199	Case 3C-1: Reactor Pressure Vessel to Cavity Water Heat Transfer Vessel Rupture	34-147
34-200	Case 3C-1: In-Vessel Hydrogen Generation Vessel Rupture	34-147
34-201	Case 3C-1: Mass Fraction of CsI Released to Containment Vessel Rupture	34-148
34-202	Case 3C-1: Mass Fraction of Noble Gas Released to Environment Vessel Rupture	34-148
34-203	Case 3C-1: Mass Fraction of Fission Products Released to Environment Vessel Rupture	34-149
34-204	Case 3C-1: Mass Fraction of SrO Released to Environment Vessel Rupture	34-149
34-205	Case 3C-2: Reactor Coolant System and Steam Generator Pressure Vessel Rupture with Containment Failure	34-150
34-206	Case 3C-2: ADS Stage 4 Flow Rates Vessel Rupture with Containment Failure	34-150
34-207	Case 3C-2: Accumulator/CMT Water Mass Vessel Rupture with Containment Failure	34-151

LIST OF FIGURES (cont.)

Figure No.	Title	Page
34-208	Case 3C-2: IRWST Injection Flow Rate Vessel Rupture with Containment Failure	34-151
34-209	Case 3C-2: Break Flow Rate Vessel Rupture with Containment Failure	34-152
34-210	Case 3C-2: Reactor Vessel Water Level Vessel Rupture with Containment Failure	34-152
34-211	Case 3C-2: Core Temperatures Vessel Rupture with Containment Failure	34-153
34-212	Case 3C-2: Containment Water Pool Elevations Vessel Rupture with Containment Failure	34-153
34-213	Case 3C-2: Containment Pressure Vessel Rupture with Containment Failure	34-154
34-214	Case 3C-2: Containment Gas Temperature Vessel Rupture with Containment Failure	34-154
34-215	Case 3C-2: Core Mass Vessel Rupture with Containment Failure	34-155
34-216	Case 3C-2: Reactor Pressure Vessel to Cavity Water Heat Transfer Vessel Rupture with Containment Failure	34-155
34-217	Case 3C-2: In-Vessel Hydrogen Generation Vessel Rupture with Containment Failure	34-156
34-218	Case 3C-2: Mass Fraction of CsI Released to Containment Vessel Rupture with Containment Failure	34-156
34-219	Case 3C-2: Mass Fraction of Noble Gases Released to Environment Vessel Rupture with Containment Failure	34-157
34-220	Case 3C-2: Mass Fraction of Fission Products Released to Environment Vessel Rupture with Containment Failure	34-157
34-221	Case 3C-2: Mass Fraction of SrO Released to Environment Vessel Rupture with Containment Failure	34-158
34-222	Case 3D-1: Reactor Coolant System and Steam Generator Pressure Spurious ADS-4 with Failed CMTs	34-158
34-223	Case 3D-1: ADS Stage 4 Flow Rates Spurious ADS-4 with Failed CMTs	34-159
34-224	Case 3D-1: Accumulator/CMT Water Mass Spurious ADS-4 with Failed CMTs	34-159
34-225	Case 3D-1: IRWST Injection Flow Rate Spurious ADS-4 with Failed CMTs	34-160
34-226	Case 3D-1: Break Flow Rate Spurious ADS-4 with Failed CMTs	34-160
34-227	Case 3D-1: Reactor Vessel Water Level Spurious ADS-4 with Failed CMTs	34-161
34-228	Case 3D-1: Core Temperatures Spurious ADS-4 with Failed CMTs	34-161
34-229	Case 3D-1: Containment Water Pool Elevations Spurious ADS-4 with Failed CMTs	34-162
34-230	Case 3D-1: Containment Pressure Spurious ADS-4 with Failed CMTs	34-162
34-231	Case 3D-1: Containment Gas Temperature Spurious ADS-4 with Failed CMTs	34-163
34-232	Case 3D-1: Core Mass Spurious ADS-4 with Failed CMTs	34-163

LIST OF FIGURES (cont.)

Figure No.	Title	Page
34-233	Case 3D-1: Reactor Pressure Vessel to Cavity Water Heat Transfer Spurious ADS-4 with Failed CMTs	34-164
34-234	Case 3D-1: In-Vessel Hydrogen Generation Spurious ADS-4 with Failed CMTs	34-164
34-235	Case 3D-1: Mass Fraction of CsI Released to Containment Spurious ADS-4 with Failed CMTs	34-165
34-236	Case 3D-1: Mass Fraction of Noble Gases Released to Environment Spurious ADS-4 with Failed CMTs	34-165
34-237	Case 3D-1: Mass Fraction of Fission Products Released to Environment Spurious ADS-4 with Failed CMTs	34-166
34-238	Case 3D-1: Mass Fraction of SrO Released to Environment Spurious ADS-4 with Failed CMTs	34-166
34-239	Case 3D-2: Reactor Coolant System and Steam Generator Pressure Spurious ADS-2 with Failed CMTs	34-167
34-240	Case 3D-2: ADS Stage 4 Flow Rates Spurious ADS-2 with Failed CMTs	34-167
34-241	Case 3D-2: Accumulator/CMT Water Mass Spurious ADS-2 with Failed CMTs	34-168
34-242	Case 3D-2: IRWST Injection Flow Rate Spurious ADS-2 with Failed CMTs	34-168
34-243	Case 3D-2: Break Flow Rate Spurious ADS-2 with Failed CMTs	34-169
34-244	Case 3D-2: Reactor Vessel Water Level Spurious ADS-2 with Failed CMTs	34-169
34-245	Case 3D-2: Core Temperatures Spurious ADS-2 with Failed CMTs	34-170
34-246	Case 3D-2: Containment Pool Water Elevations Spurious ADS-2 with Failed CMTs	34-170
34-247	Case 3D-2: Containment Pressure Spurious ADS-2 with Failed CMTs	34-171
34-248	Case 3D-2: Containment Gas Temperature Spurious ADS-2 with Failed CMTs	34-171
34-249	Case 3D-2: Core Mass Spurious ADS-2 with Failed CMTs	34-172
34-250	Case 3D-2: Reactor Pressure Vessel to Cavity Water Heat Transfer Spurious ADS-2 with Failed CMTs	34-172
34-251	Case 3D-2: In-Vessel Hydrogen Generation Spurious ADS-2 with Failed CMTs	34-173
34-252	Case 3D-2: Mass Fraction of CsI Released to Containment Spurious ADS-2 with Failed CMTs	34-173
34-253	Case 3D-2: Mass Fraction of Noble Gas Released to Environment Spurious ADS-2 with Failed CMTs	34-174
34-254	Case 3D-2: Mass Fraction of Fission Products Released to Environment Spurious ADS-2 with Failed CMTs	34-174
34-255	Case 3D-2: Mass Fraction of SrO Released to Environment Spurious ADS-2 with Failed CMTs	34-175
34-256	Case 3D-3: Reactor Coolant System and Steam Generator Pressure DVI Line Break with Failed ADS	34-175
34-257	Case 3D-3: ADS Stage 4 Flow Rates DVI Line Break with Failed ADS	34-176

LIST OF FIGURES (cont.)

Figure No.	Title	Page
34-258	Case 3D-3: Accumulator/CMT Water Mass DVI Line Break with Failed ADS	34-176
34-259	Case 3D-3: IRWST Injection Flow Rate DVI Line Break with Failed ADS	34-177
34-260	Case 3D-3: Break Flow Rate DVI Line Break with Failed ADS	34-177
34-261	Case 3D-3: Reactor Vessel Water Level DVI Line Break with Failed ADS	34-178
34-262	Case 3D-3: Core Temperatures DVI Line Break with Failed ADS	34-178
34-263	Case 3D-3: Containment Water Pool Elevations DVI Line Break with Failed ADS	34-179
34-264	Case 3D-3: Containment Pressure DVI Line Break with Failed ADS	34-179
34-265	Case 3D-3: Containment Gas Temperature DVI Line Break with Failed ADS	34-180
34-266	Case 3D-3: Core Mass DVI Line Break with Failed ADS	34-180
34-267	Case 3D-3: Reactor Pressure Vessel to Cavity Water Heat Transfer DVI Line Break with Failed ADS	34-181
34-268	Case 3D-3: In-Vessel Hydrogen Generation DVI Line Break with Failed ADS	34-181
34-269	Case 3D-3: Mass Fraction of CsI Released to Containment DVI Line Break with Failed ADS	34-182
34-270	Case 3D-3: Mass Fraction of Noble Gases Released to Environment DVI Line Break with Failed ADS	34-182
34-271	Case 3D-3: Mass Fraction of Fission Products Released to Environment DVI Line Break with Failed ADS	34-183
34-272	Case 3D-3: Mass Fraction of SrO Released to Environment DVI Line Break with Failed ADS	34-183
34-273	Case 3D-4: Reactor Coolant System and Steam Generator Pressure Spurious ADS-2, Failed CMTs, Diffusion Flame	34-184
34-274	Case 3D-4: ADS Stage 4 Flow Rates Spurious ADS-2, Failed CMTs, Diffusion Flame	34-184
34-275	Case 3D-4: Accumulator/CMT Water Mass Spurious ADS-2, Failed CMTs, Diffusion Flame	34-185
34-276	Case 3D-4: IRWST Injection Flow Rate Spurious ADS-2, Failed CMTs, Diffusion Flame	34-185
34-277	Case 3D-4: Break Flow Rate Spurious ADS-2, Failed CMTs, Diffusion Flame	34-186
34-278	Case 3D-4: Reactor Vessel Water Level Spurious ADS-2, Failed CMTs, Diffusion Flame	34-186
34-279	Case 3D-4: Core Temperatures Spurious ADS-2, Failed CMTs, Diffusion Flame	34-187
34-280	Case 3D-4: Containment Water Pool Elevations Spurious ADS-2, Failed CMTs, Diffusion Flame	34-187
34-281	Case 3D-4: Containment Pressure Spurious ADS-2, Failed CMTs, Diffusion Flame	34-188

LIST OF FIGURES (cont.)

Figure No.	Title	Page
34-282	Case 3D-4: Containment Gas Temperature Spurious ADS-2, Failed CMTs, Diffusion Flame	34-188
34-283	Case 3D-4: Core Mass Spurious ADS-2, Failed CMTs, Diffusion Flame	34-189
34-284	Case 3D-4: Reactor Pressure Vessel to Cavity Water Heat Transfer Spurious ADS-2, Failed CMTs, Diffusion Flame	34-189
34-285	Case 3D-4: In-Vessel Hydrogen Generation Spurious ADS-2, Failed CMTs, Diffusion Flame	34-190
34-286	Case 3D-4: Mass Fraction of CsI Released to Containment Spurious ADS-2, Failed CMTs, Diffusion Flame	34-190
34-287	Case 3D-4: Mass Fraction of Noble Gases Released to Environment Spurious ADS-2, Failed CMTs, Diffusion Flame	34-191
34-288	Case 3D-4: Mass Fraction of Fission Products Released to Environment Spurious ADS-2, Failed CMTs, Diffusion Flame	34-191
34-289	Case 3D-4: Mass Fraction of SrO Release to Environment Spurious ADS-2, Failed CMTs, Diffusion Flame	34-192
34-290	Case 6E-1: Reactor Coolant System and Steam Generator Pressure SGTR Early Core Melt	34-192
34-291	Case 6E-1: ADS Stage 4 Flow Rates SGTR Early Core Melt	34-193
34-292	Case 6E-1: Accumulator/CMT Water Mass SGTR Early Core Melt	34-193
34-293	Case 6E-1: IRWST Injection Flow Rate SGTR Early Core Melt	34-194
34-294	Case 6E-1: Break Flow Rate SGTR Early Core Melt	34-194
34-295	Case 6E-1: Reactor Vessel Water Level SGTR Early Core Melt	34-195
34-296	Case 6E-1: Core Temperatures SGTR Early Core Melt	34-195
34-297	Case 6E-1: Containment Water Pool Elevations SGTR Early Core Melt	34-196
34-298	Case 6E-1: Containment Pressure SGTR Early Core Melt	34-196
34-299	Case 6E-1: Containment Gas Temperature SGTR Early Core Melt	34-197
34-300	Case 6E-1: Core Mass SGTR Early Core Melt	34-197
34-301	Case 6E-1: Reactor Pressure Vessel to Cavity Water Heat Transfer SGTR Early Core Melt	34-198
34-302	Case 6E-1: In-Vessel Hydrogen Generation SGTR Early Core Melt	34-198
34-303	Case 6E-1: Mass Fraction of CsI Released to Containment SGTR Early Core Melt	34-199
34-304	Case 6E-1: Mass Fraction of Noble Gases Released to Environment SGTR Early Core Melt	34-199
34-305	Case 6E-1: Mass Fraction of Fission Products Released to Environment SGTR Early Core Melt	34-200
34-306	Case 6E-1: Mass Fraction of SrO Released to Environment SGTR Early Core Melt	34-200
34-307	Case 6L-1: Reactor Coolant System and Steam Generator Pressure SGTR Core Melt Failure at Recirculation	34-201
34-308	Case 6L-1: ADS Stage 4 Flow Rates SGTR Core Melt Failure at Recirculation	34-201

LIST OF FIGURES (cont.)

Figure No.	Title	Page
34-309	Case 6L-1: Accumulator/CMT Water Mass SGTR Core Melt Failure at Recirculation	34-202
34-310	Case 6L-1: IRWST Injection Flow Rate SGTR Core Melt Failure at Recirculation	34-202
34-311	Case 6L-1: Break Flow Rate SGTR Core Melt Failure at Recirculation	34-203
34-312	Case 6L-1: Reactor Vessel Water Level SGTR Core Melt Failure at Recirculation	34-203
34-313	Case 6L-1: Core Temperatures SGTR Core Melt Failure at Recirculation	34-204
34-314	Case 6L-1: Containment Water Pool Elevations SGTR Core Melt Failure at Recirculation	34-204
34-315	Case 6L-1: Containment Pressure SGTR Core Melt Failure at Recirculation	34-205
34-316	Case 6L-1: Containment Gas Temperature SGTR Core Melt Failure at Recirculation	34-205
34-317	Case 6L-1: Core Mass SGTR Core Melt Failure at Recirculation	34-206
34-318	Case 6L-1: Reactor Pressure Vessel to Cavity Water Heat Transfer SGTR Core Melt Failure at Recirculation	34-206
34-319	Case 6L-1: In-Vessel Hydrogen Generation SGTR Core Melt Failure at Recirculation	34-207
34-320	Case 6L-1: Mass Fraction of CsI Released to Containment SGTR Core Melt Failure at Recirculation	34-207
34-321	Case 6L-1: Mass Fraction of Noble Gases Released to Environment SGTR Core Melt Failure at Recirculation	34-208
34-322	Case 6L-1: Mass Fraction of Fission Products Released to Environment SGTR Core Melt Failure at Recirculation	34-208
34-323	Case 6L-1: Mass Fraction of SrO Released to Environment SGTR Core Melt Failure at Recirculation	34-209
34-324	Case 1AP-1: Reactor Coolant System and Steam Generator Pressure SBLOCA with PRHR, CMTs Failed	34-209
34-325	Case 1AP-1: ADS Stage 4 Flow Rates SBLOCA with PRHR, CMTs Failed	34-210
34-326	Case 1AP-1: Accumulator/CMT Water Mass SBLOCA with PRHR, CMTs Failed	34-210
34-327	Case 1AP-1: IRWST Injection Flow Rate SBLOCA with PRHR, CMTs Failed	34-211
34-328	Case 1AP-1: Break Flow Rate SBLOCA with PRHR, CMTs Failed	34-211
34-329	Case 1AP-1: Reactor Vessel Water Level SBLOCA with PRHR, CMTs Failed	34-212
34-330	Case 1AP-1: Core Temperatures SBLOCA with PRHR, CMTs Failed	34-212
34-331	Case 1AP-1: Containment Pool Water Elevations SBLOCA with PRHR, CMTs Failed	34-213
34-332	Case 1AP-1: Containment Pressure SBLOCA with PRHR, CMTs Failed	34-213
34-333	Case 1AP-1: Containment Gas Temperature SBLOCA with PRHR, CMTs Failed	34-214

LIST OF FIGURES (cont.)

Figure No.	Title	Page
34-334	Case 1AP-1: Core Mass SBLOCA with PRHR, CMTs Failed	34-214
34-335	Case 1AP-1: Reactor Pressure Vessel to Cavity Water Heat Transfer SBLOCA with PRHR, CMTs Failed	34-215
34-336	Case 1AP-1: In-Vessel Hydrogen Generation SBLOCA with PRHR, CMTs Failed	34-215
34-337	Case 1AP-1: Mass Fraction of CsI Released to Containment SBLOCA with PRHR, CMTs Failed	34-216
34-338	Case 1AP-1: Mass Fraction of Noble Gases Released to Environment SBLOCA with PRHR, CMTs Failed	34-216
34-339	Case 1AP-1: Mass Fraction of Fission Products Released to Environment SBLOCA with PRHR, CMTs Failed	34-217
34-340	Case 1AP-1: Mass Fraction of SrO Released to Environment SBLOCA with PRHR, CMTs Failed	34-217
34-341	Case 1AP-2: Reactor Coolant System and Steam Generator Pressure SBLOCA with PRHR, CMTs Failed	34-218
34-342	Case 1AP-2: ADS Stage 4 Flow Rates SBLOCA with PRHR, CMTs Failed	34-218
34-343	Case 1AP-2: Accumulator/CMT Water Mass SBLOCA with PRHR, CMTs Failed	34-219
34-344	Case 1AP-2: IRWST Injection Flow Rate SBLOCA with PRHR, CMTs Failed	34-219
34-345	Case 1AP-2: Break Flow Rate SBLOCA with PRHR, CMTs Failed	34-220
34-346	Case 1AP-2: Reactor Vessel Water Level SBLOCA with PRHR, CMTs Failed	34-220
34-347	Case 1AP-2: Core Temperatures SBLOCA with PRHR, CMTs Failed	34-221
34-348	Case 1AP-2: Containment Water Pool Elevations SBLOCA with PRHR, CMTs Failed	34-221
34-349	Case 1AP-2: Containment Pressure SBLOCA with PRHR, CMTs Failed	34-222
34-350	Case 1AP-2: Containment Gas Temperature SBLOCA with PRHR, CMTs Failed	34-222
34-351	Case 1AP-2: Core Mass SBLOCA with PRHR, CMTs Failed	34-223
34-352	Case 1AP-2: Reactor Pressure Vessel to Cavity Water Heat Transfer SBLOCA with PRHR, CMTs Failed	34-223
34-353	Case 1AP-2: In-Vessel Hydrogen Generation SBLOCA with PRHR, CMTs Failed	34-224
34-354	Case 1AP-2: Mass Fraction of CsI Released to Containment SBLOCA with PRHR, CMTs Failed	34-224
34-355	Case 1AP-2: Mass Fraction of Noble Gases Released to Environment SBLOCA with PRHR, CMTs Failed	34-225
34-356	Case 1AP-2: Mass Fraction of Fission Products Released to Environment SBLOCA with PRHR, CMTs Failed	34-225
34-357	Case 1AP-2: Mass Fraction of SrO Released to Environment SBLOCA with PRHR, CMTs Failed	34-226

LIST OF FIGURES (cont.)

Figure No.	Title	Page
34-358	Case 1A-1: Reactor Coolant System and Steam Generator Pressure Transient with Creep of SG Tubes	34-226
34-359	Case 1A-1: ADS Stage 4 Flow Rates Transient with Creep of SG Tubes	34-227
34-360	Case 1A-1: Accumulator/CMT Water Mass Transient with Creep of SG Tubes	34-227
34-361	Case 1A-1: IRWST Injection Flow Rate Transient with Creep of SG Tubes	34-228
34-362	Case 1A-1: Break Flow Rate Transient with Creep of SG Tubes	34-228
34-363	Case 1A-1: Reactor Vessel Water Level Transient with Creep of SG Tubes	34-229
34-364	Case 1A-1: Core Temperatures Transient with Creep of SG Tubes	34-229
34-365	Case 1A-1: Containment Pool Water Elevations Transient with Creep of SG Tubes	34-230
34-366	Case 1A-1: Containment Pressure Transient with Creep of SG Tubes	34-230
34-367	Case 1A-1: Containment Gas Temperature Transient with Creep of SG Tubes	34-231
34-368	Case 1A-1: Core Mass Transient with Creep of SG Tubes	34-231
34-369	Case 1A-1: Reactor Pressure Vessel to Cavity Water Heat Transfer Transient with Creep of SG Tubes	34-232
34-370	Case 1A-1: In-Vessel Hydrogen Generation Transient with Creep of SG Tubes	34-232
34-371	Case 1A-1: Mass Fraction of CsI Released to Containment Transient with Creep of SG Tubes	34-233
34-372	Case 1A-1: Mass Fraction of Noble Gases Released to Environment Transient with Creep of SG Tubes	34-233
34-373	Case 1A-1: Mass Fraction of Fission Products Released to Environment Transient with Creep of SG Tubes	34-234
34-374	Case 1A-1: Mass Fraction of SrO Released to Environment Transient with Creep of SG Tubes	34-234
34-375	Case 1A-2: Reactor Coolant System and Steam Generator Pressure Transient with Creep of SG Tubes	34-235
34-376	Case 1A-2: ADS Stage 4 Flow Rates Transient with Creep of SG Tubes	34-235
34-377	Case 1A-2: Accumulator/CMT Water Mass Transient with Creep of SG Tubes	34-236
34-378	Case 1A-2: IRWST Injection Flow Rate Transient with Creep of SG Tubes	34-236
34-379	Case 1A-2: Break Flow Rate Transient with Creep of SG Tubes	34-237
34-380	Case 1A-2: Reactor Vessel Water Level Transient with Creep of SG Tubes	34-237
34-381	Case 1A-2: Core Temperatures Transient with Creep of SG Tubes	34-238
34-382	Case 1A-2: Containment Water Pool Elevations Transient with Creep of SG Tubes	34-238
34-383	Case 1A-2: Containment Pressure Transient with Creep of SG Tubes	34-239
34-384	Case 1A-2: Containment Gas Temperature Transient with Creep of SG Tubes	34-239
34-385	Case 1A-2: Core Mass Transient with Creep of SG Tubes	34-240

LIST OF FIGURES (cont.)

Figure No.	Title	Page
34-386	Case 1A-2: Reactor Pressure Vessel to Cavity Water Heat Transfer Transient with Creep of SG Tubes	34-240
34-387	Case 1A-2: In-Vessel Hydrogen Generation Transient with Creep of SG Tubes	34-241
34-388	Case 1A-2: Mass Fraction of CsI Released to Containment Transient with Creep of SG Tubes	34-241
34-389	Case 1A-2: Mass Fraction of Noble Gases Released to Environment Transient with Creep of SG Tubes	34-242
34-390	Case 1A-2: Mass Fraction of Fission Products Released to Environment Transient with Creep of SG Tubes	34-242
34-391	Case 1A-2: Mass Fraction of SrO Released to Environment Transient with Creep of SG Tubes	34-243
35-1	Containment Event Tree	35-29
36-1	AP1000 Accident Class 1A Base Case for Node DP Success – RCS Pressure	36-7
36-2	AP1000 Accident Class 1A Base Case for Node DP Success – Core-Exit Gas Temperature	36-8
36-3	AP1000 Accident Class 1A Base Case for Node DP Success – Steam Generator Tube Creep Damage	36-9
36-4	AP1000 Steam Generator Tube Rupture with PRHR and Stuck-Open SV – Passive RHR Heat Removal	36-10
36-5	AP1000 Steam Generator Tube Rupture with PRHR and Stuck-Open SV – Core Makeup Tank Flow (one tank)	36-11
36-6	AP1000 Steam Generator Tube Rupture with PRHR and Stuck-Open SV – Reactor Coolant System Pressure	36-12
36-7	AP1000 Steam Generator Tube Rupture with PRHR and Stuck-Open SV – Core-Exit Gas Temperature	36-13
39-1	AP1000 Base Case In-Vessel Retention of Molten Core Debris	39-23
39-2	AP1000 Core Shroud	39-24
39-3	Comparison of ULPU-2000 Configuration III and ULPU-2000 Configuration IV	39-25
39-4	Effect of Water Level on Water Circulation During IVR	39-26
39-5	ULPU-2000 Configuration IV Results (Reference 39-4)	39-27
39-6	AP1000 In-Vessel Retention of Molten Core Debris Quantification Zirconium Oxidation Fraction Input Probability Distribution	39-28
39-7	AP1000 In-Vessel Retention of Molten Core Debris Quantification Mass of Steel in Debris Input Probability Distribution	39-29
39-8	AP1000 In-Vessel Retention of Molten Core Debris Quantification Time of Final Bounding State Input Probability Distribution	39-30
39-9	AP1000 In-Vessel Retention of Molten Core Debris Quantification Height of the Oxide Layer	39-31

LIST OF FIGURES (cont.)

Figure No.	Title	Page
39-10	AP1000 In-Vessel Retention of Molten Core Debris Quantification Height of the Metal Layer	39-32
39-11	AP1000 In-Vessel Retention of Molten Core Debris Quantification Power Density in Oxide Debris	39-33
39-12	AP1000 In-Vessel Retention of Molten Core Debris Quantification Internal Rayleigh Number in the Oxide Layer	39-34
39-13	AP1000 In-Vessel Retention of Molten Core Debris Quantification External Rayleigh Number in the Metal Layer	39-35
39-14	AP1000 In-Vessel Retention of Molten Core Debris Quantification Normalized Heat Fluxes	39-36
39-15	AP1000 Passive Core Cooling System	39-37
39-16	Containment Floodable Region	39-38
39-17	Containment Floodable Region – Exploded View	39-39
39-18	AP1000 Cavity Flooding Rate	39-40
39-19	Schematic of the AP1000 Reactor Vessel, Vessel Cavity, Vessel Insulation, and Vents	39-41
39A-1	AP1000 Reactor Pressure Vessel, Core and Lower Internals	39A-21
39A-2	Core Shroud	39A-22
39A-3	Bottom of Core Shroud, Core Barrel, and Lower Core Support Plate (Not to Scale)	39A-23
39A-4	Axial Power Shapes Used for Core Relocation Analysis	39A-24
39A-5	Radial Power Shape Used for Core Relocation Analysis	39A-25
39A-6	Cross Section Geometry of Finite Difference Computational Model	39A-26
39A-7	Computational Mesh for Finite Difference Computational Model	39A-27
39A-8	MAAP4 AP1000 Core Melting and Relocation, Top-Skewed Power Shape Reactor – Coolant System Pressure	39A-28
39A-9	MAAP4 AP1000 Core Melting and Relocation, Top-Skewed Power Shape – Containment and Reactor Coolant System Pressure	39A-28
39A-10	MAAP4 AP1000 Core Melting and Relocation, Chopped Cosine Power Shape – Reactor Vessel Mixture Level	39A-29
39A-11	MAAP4 AP1000 Core Melting and Relocation, Top-Skewed Power Shape – Hottest Temperature in Core	39A-29
39A-12	MAAP4 AP1000 Core Melting and Relocation, Top-Skewed Power Shape – Mass of Hydrogen Generated in Core	39A-30
39A-13	MAAP4 AP1000 Core Melting and Relocation, Top-Skewed Power Shape Temperature of Core Shroud/Barrel (Core Elevation 1.7 – 2.0 m)	39A-30
39A-14	MAAP4 AP1000 Core Melting and Relocation, Top-Skewed Power Shape Temperature of Core Shroud/Barrel (Core Elevation 2.0 – 2.3 m)	39A-31
39A-15	MAAP4 AP1000 Core Melting and Relocation, Top-Skewed Power Shape – Mass of Core Shroud/Barrel	39A-31
39A-16	MAAP4 AP1000 Core Melting and Relocation, Top-Skewed Power Shape Volume of Debris in Reactor Vessel Lower Plenum	39A-32

LIST OF FIGURES (cont.)

Figure No.	Title	Page
39A-17	MAAP4 AP1000 Core Melting and Relocation, Chopped Cosine Power Shape – Reactor Coolant System Pressure	39A-32
39A-18	MAAP4 AP1000 Core Melting and Relocation, Chopped Cosine Power Shape – Containment and Reactor Coolant System Pressure	39A-33
39A-19	MAAP4 AP1000 Core Melting and Relocation, Chopped Cosine Power Shape – Reactor Vessel Mixture Level	39A-33
39A-20	MAAP4 AP1000 Core Melting and Relocation, Chopped Cosine Power Shape – Hottest Temperature in Core	39A-34
39A-21	MAAP4 AP1000 Core Melting and Relocation, Chopped Cosine Power Shape – Mass of Hydrogen Generated in Core	39A-34
39A-22	MAAP4-AP1000 Core Melting and Relocation, Chopped Cosine Power Shape Temperature of Core Shroud/Barrel (Core Elevation 1.1 – 1.4 m)	39A-35
39A-23	MAAP4 AP1000 Core Melting and Relocation, Chopped Cosine Power Shape Temperature of Core Shroud/Barrel (Core Elevation 1.4 – 1.7 m)	39A-35
39A-24	MAAP4 AP1000 Core Melting and Relocation, Chopped Cosine Power Shape – Mass of Core Shroud/Barrel	39A-36
39A-25	MAAP4 AP1000 Core Melting and Relocation, Chopped Cosine Power Shape Volume of Debris in Reactor Vessel Lower Plenum	39A-36
39A-26	Initial Oxide Relocation to Lower Plenum	39A-37
39A-27	Finite Difference Result for Top-Skewed Power Shape at Level 5	39A-38
39A-28	Finite Difference Temperature Map Level 5 at 5380 Seconds for Top-Skewed Power Shape Case	39A-38
39A-29	MAAP4 Core Temperature Profile for Top-Skewed Power Shape Core Elevation = 2.0 – 2.3 m Above Bottom of Active Fuel (Core Axial Row 12)	39A-39
39A-30	Relocation of Corium	39A-39
39A-31	Model for Relocation to Lower Plenum	39A-40
40-1	AP1000 Passive Containment Cooling System	40-7
40-2	Schematic of Passive Containment Cooling System Piping	40-8
40-3	AP1000 Containment Venting Pressure Response	40-9
40-4	AP1000 Containment Venting Loss of Containment Air	40-10
40-5	AP1000 Dry PCS Containment Pressure Response	40-11
40-6	AP1000 Dry PCS Containment Temperature Response	40-12
41-1	IRWST Hydrogen Venting	41-36
41-2	Accident Class 3BE Early Detonation Decomposition Event Tree – Given RFL Success	41-37
41-3	Accident Class 3BE Early Detonation Decomposition Event Tree – Given RFL Failure	41-38
41-4	Accident Class 3BL Early Detonation Decomposition Event Tree	41-39
41-5	Accident Class 3C/3BR Early Detonation Decomposition Event Tree	41-40
41-6	Accident Class 3D/1D Early Detonation Decomposition Event Tree	41-41
41-7	Accident Class 1AP Early Detonation Decomposition Event Tree	41-42

LIST OF FIGURES (cont.)

Figure No.	Title	Page
41-8	Boil-Off Hydrogen Generation Probability Density Function	41-43
41-9	No Reflood Pre-Burn Containment Pressure Probability Density Function	41-44
41-10	No-Reflood Hydrogen Deflagration Peak Pressure Probability	41-45
41-11	Early Reflood Hydrogen Generation Probability Density Function	41-46
41-12	Early Reflood Pre-Burn Containment Pressure Probability Density Function	41-47
41-13	Early Reflood Hydrogen Deflagration Peak Pressure Probability	41-48
41-14	Late Reflood Hydrogen Generation Probability Density Function	41-49
41-15	Late Reflood Pre-Burn Containment Pressure Probability Density Function	41-50
41-16	Late Reflood Hydrogen Deflagration Peak Pressure Probability	41-51
41-17	Accident Class 3BE Intermediate Detonation Decomposition Event Tree – Given RFL Success	41-52
41-18	Accident Class 3BE Intermediate Detonation Decomposition Event Tree – Given RFL Failure	41-53
41-19	Accident Class 3BL Intermediate Detonation Decomposition Event Tree	41-54
41-20	Accident Class 3C/3BR Intermediate Detonation Decomposition Event Tree	41-55
41-21	Accident Class 3D/1D Intermediate Detonation Decomposition Event Tree	41-56
41-22	Accident Class 1AP Intermediate Detonation Decomposition Event Tree	41-57
41A-1	Case 3BE-1: Reactor Coolant System Pressure DVI Line Break for Containment Water Level	41A-41
41A-2	Case 3BE-1: Core-Exit Gas Temperature DVI Line Break for Containment Water Level	41A-41
41A-3	Case 3BE-1: Reactor Vessel Mixture Level DVI Line Break for Containment Water Level	41A-42
41A-4	Case 3BE-1: Hydrogen Generated In-Vessel DVI Line Break for Containment Water Level	41A-42
41A-5	Case 3BE-1: Containment Pressure DVI Line Break for Containment Water Level	41A-43
41A-6	Case 3BE-1: Containment Gas Temperature DVI Line Break for Containment Water Level	41A-43
41A-7	Case 3BE-1: Containment Compartments Water Level DVI Line Break for Containment Water Level	41A-44
41A-8	Case 3BE-1: Well-Mixed Compartment Hydrogen Concentration DVI Line Break for Containment Water Level	41A-44
41A-9	Case 3BE-1: Well-Mixed Compartment Steam Concentration DVI Line Break for Containment Water Level	41A-45
41A-10	Case 3BE-1: Well-Mixed Compartment Oxygen Concentration DVI Line Break for Containment Water Level	41A-45
41A-11	Case 3BE-1: Confined Compartment Hydrogen Concentration DVI Line Break for Containment Water Level	41A-46
41A-12	Case 3BE-1: Confined Compartment Steam Concentration DVI Line Break for Containment Water Level	41A-46

LIST OF FIGURES (cont.)

Figure No.	Title	Page
41A-13	Case 3BE-1: Confined Compartment Oxygen Concentration DVI Line Break for Containment Water Level	41A-47
41A-14	Case 3BE-1: Equivalence Ratio in SG Room DVI Line Break for Containment Water Level	41A-47
41A-15	Case 3BE-1: Equivalence Ratio in CMT Room DVI Line Break for Containment Water Level	41A-48
41A-16	Case 3BE-1: Equivalence Ratio in IRWST DVI Line Break for Containment Water Level	41A-48
41A-17	Case 3BE-1: Equivalence Ratio in PXS DVI Line Break for Containment Water Level	41A-49
41A-18	Case 3BE-2: Reactor Coolant System Pressure DVI Line Break with Failed Gravity Injection and No PXS Flooding	41A-49
41A-19	Case 3BE-2: Core-Exit Gas Temperature DVI Line Break with Failed Gravity Injection and No PXS Flooding	41A-50
41A-20	Case 3BE-2: Reactor Vessel Mixture Level DVI Line Break with Failed Gravity Injection and No PXS Flooding	41A-50
41A-21	Case 3BE-2: Hydrogen Generated In-Vessel DVI Line Break with Failed Gravity Injection and No PXS Flooding	41A-51
41A-22	Case 3BE-2: Containment Pressure DVI Line Break with Failed Gravity Injection and No PXS Flooding	41A-51
41A-23	Case 3BE-2: Containment Gas Temperature DVI Line Break with Failed Gravity Injection and No PXS Flooding	41A-52
41A-24	Case 3BE-2: Containment Compartments Water Level DVI Line Break with Failed Gravity Injection and No PXS Flooding	41A-52
41A-25	Case 3BE-2: Well-Mixed Compartment Hydrogen Concentration DVI Line Break with Failed Gravity Injection and No PXS Flooding	41A-53
41A-26	Case 3BE-2: Well-Mixed Compartment Steam Concentration DVI Line Break with Failed Gravity Injection and No PXS Flooding	41A-53
41A-27	Case 3BE-2: Well-Mixed Compartment Oxygen Concentration DVI Line Break with Failed Gravity Injection and No PXS Flooding	41A-54
41A-28	Case 3BE-2: Confined Compartment Hydrogen Concentration DVI Line Break with Failed Gravity Injection and No PXS Flooding	41A-54
41A-29	Case 3BE-2: Confined Compartment Steam Concentration DVI Line Break with Failed Gravity Injection and No PXS Flooding	41A-55
41A-30	Case 3BE-2: Confined Compartment Oxygen Concentration DVI Line Break with Failed Gravity Injection and No PXS Flooding	41A-55
41A-31	Case 3BE-2: Equivalence Ratio in SG Room DVI Line Break with Failed Gravity Injection and No PXS Flooding	41A-56
41A-32	Case 3BE-2: Equivalence Ratio in CMT Room DVI Line Break with Failed Gravity Injection and No PXS Flooding	41A-56
41A-33	Case 3BE-2: Equivalence Ratio in IRWST DVI Line Break with Failed Gravity Injection and No PXS Flooding	41A-57

LIST OF FIGURES (cont.)

Figure No.	Title	Page
41A-34	Case 3BE-2: Equivalence Ratio in PXS DVI Line Break with Failed Gravity Injection and No PXS Flooding	41A-57
41A-35	Case 3BE-4: Reactor Coolant System Pressure Spurious ADS, Failed Gravity Injection	41A-58
41A-36	Case 3BE-4: Core-Exit Gas Temperature Spurious ADS, Failed Gravity Injection	41A-58
41A-37	Case 3BE-4: Reactor Vessel Mixture Level Spurious ADS, Failed Gravity Injection	41A-59
41A-38	Case 3BE-4: Hydrogen Generated In-Vessel Spurious ADS, Failed Gravity Injection	41A-59
41A-39	Case 3BE-4: Containment Pressure Spurious ADS, Failed Gravity Injection	41A-60
41A-40	Case 3BE-4: Containment Gas Temperature Spurious ADS, Failed Gravity Injection	41A-60
41A-41	Case 3BE-4: Containment Compartments Water Level Spurious ADS, Failed Gravity Injection	41A-61
41A-42	Case 3BE-4: Well-Mixed Compartment Hydrogen Concentration Spurious ADS, Failed Gravity Injection	41A-61
41A-43	Case 3BE-4: Well-Mixed Compartment Steam Concentration Spurious ADS, Failed Gravity Injection	41A-62
41A-44	Case 3BE-4: Well-Mixed Compartment Oxygen Concentration Spurious ADS, Failed Gravity Injection	41A-62
41A-45	Case 3BE-4: Confined Compartment Hydrogen Concentration Spurious ADS, Failed Gravity Injection	41A-63
41A-46	Case 3BE-4: Confined Compartment Steam Concentration Spurious ADS, Failed Gravity Injection	41A-63
41A-47	Case 3BE-4: Confined Compartment Oxygen Concentration Spurious ADS, Failed Gravity Injection	41A-64
41A-48	Case 3BE-4: Equivalence Ratio in SG Room Spurious ADS, Failed Gravity Injection	41A-64
41A-49	Case 3BE-4: Equivalence Ratio in CMT Room Spurious ADS, Failed Gravity Injection	41A-65
41A-50	Case 3BE-4: Equivalence Ratio in IRWST Spurious ADS, Failed Gravity Injection	41A-65
41A-51	Case 3BE-4: Equivalence Ratio in PXS Spurious ADS, Failed Gravity Injection	41A-66
41A-52	Case 3BE-5: Reactor Coolant System Pressure SBLOCA with Failed Gravity Injection	41A-66
41A-53	Case 3BE-5: Core-Exit Gas Temperature SBLOCA with Failed Gravity Injection	41A-67
41A-54	Case 3BE-5: Reactor Vessel Mixture Level SBLOCA with Failed Gravity Injection	41A-67
41A-55	Case 3BE-5: Hydrogen Generated In-Vessel SBLOCA with Failed Gravity Injection	41A-68

LIST OF FIGURES (cont.)

Figure No.	Title	Page
41A-56	Case 3BE-5: Containment Pressure SBLOCA with Failed Gravity Injection	41A-68
41A-57	Case 3BE-5: Containment Gas Temperature SBLOCA with Failed Gravity Injection	41A-69
41A-58	Case 3BE-5: Containment Compartments Water Level SBLOCA with Failed Gravity Injection	41A-69
41A-59	Case 3BE-5: Well-Mixed Compartment Hydrogen Concentration SBLOCA with Failed Gravity Injection	41A-70
41A-60	Case 3BE-5: Well-Mixed Compartment Steam Concentration SBLOCA with Failed Gravity Injection	41A-70
41A-61	Case 3BE-5: Well-Mixed Compartment Oxygen Concentration SBLOCA with Failed Gravity Injection	41A-71
41A-62	Case 3BE-5: Confined Compartment Hydrogen Concentration SBLOCA with Failed Gravity Injection	41A-71
41A-63	Case 3BE-5: Confined Compartment Steam Concentration SBLOCA with Failed Gravity Injection	41A-72
41A-64	Case 3BE-5: Confined Compartment Oxygen Concentration SBLOCA with Failed Gravity Injection	41A-72
41A-65	Case 3BE-5: Equivalence Ratio in SG Room SBLOCA with Failed Gravity Injection	41A-73
41A-66	Case 3BE-5: Equivalence Ratio in CMT Room SBLOCA with Failed Gravity Injection	41A-73
41A-67	Case 3BE-5: Equivalence Ratio in IRWST SBLOCA with Failed Gravity Injection	41A-74
41A-68	Case 3BE-5: Equivalence Ratio in PXS SBLOCA with Failed Gravity Injection	41A-74
41A-69	Case 3BE-6: Reactor Coolant System Pressure SBLOCA with Failed Gravity Injection	41A-75
41A-70	Case 3BE-6: Core-Exit Gas Temperature SBLOCA with Failed Gravity Injection	41A-75
41A-71	Case 3BE-6: Reactor Vessel Mixture Level SBLOCA with Failed Gravity Injection	41A-76
41A-72	Case 3BE-6: Hydrogen Generated In-Vessel SBLOCA with Failed Gravity Injection	41A-76
41A-73	Case 3BE-6: Containment Pressure SBLOCA with Failed Gravity Injection	41A-77
41A-74	Case 3BE-6: Containment Gas Temperature SBLOCA with Failed Gravity Injection	41A-77
41A-75	Case 3BE-6: Containment Compartments Water Level SBLOCA with Failed Gravity Injection	41A-78
41A-76	Case 3BE-6: Well-Mixed Compartment Hydrogen Concentration SBLOCA with Failed Gravity Injection	41A-78
41A-77	Case 3BE-6: Well-Mixed Compartment Steam Concentration SBLOCA with Failed Gravity Injection	41A-79

LIST OF FIGURES (cont.)

Figure No.	Title	Page
41A-78	Case 3BE-6: Well-Mixed Compartment Oxygen Concentration SBLOCA with Failed Gravity Injection	41A-79
41A-79	Case 3BE-6: Confined Compartment Hydrogen Concentration SBLOCA with Failed Gravity Injection	41A-80
41A-80	Case 3BE-6: Confined Compartment Steam Concentration SBLOCA with Failed Gravity Injection	41A-80
41A-81	Case 3BE-6: Confined Compartment Oxygen Concentration SBLOCA with Failed Gravity Injection	41A-81
41A-82	Case 3BE-6: Equivalence Ratio in SG Room SBLOCA with Failed Gravity Injection	41A-81
41A-83	Case 3BE-6: Equivalence Ratio in CMT Room SBLOCA with Failed Gravity Injection	41A-82
41A-84	Case 3BE-6: Equivalence Ratio in IRWST SBLOCA with Failed Gravity Injection	41A-82
41A-85	Case 3BE-6: Equivalence Ratio in PXS SBLOCA with Failed Gravity Injection	41A-83
41A-86	Case 3BE-8: Reactor Coolant System Pressure SGTR	41A-83
41A-87	Case 3BE-8: Core-Exit Gas Temperature SGTR	41A-84
41A-88	Case 3BE-8: Reactor Vessel Mixture Level SGTR	41A-84
41A-89	Case 3BE-8: Hydrogen Generated In-Vessel SGTR	41A-85
41A-90	Case 3BE-8: Containment Pressure SGTR	41A-85
41A-91	Case 3BE-8: Containment Gas Temperature SGTR	41A-86
41A-92	Case 3BE-8: Containment Compartments Water Level SGTR	41A-86
41A-93	Case 3BE-8: Well-Mixed Compartment Hydrogen Concentration SGTR	41A-87
41A-94	Case 3BE-8: Well-Mixed Compartment Steam Concentration SGTR	41A-87
41A-95	Case 3BE-8: Well-Mixed Compartment Oxygen Concentration SGTR	41A-88
41A-96	Case 3BE-8: Confined Compartment Hydrogen Concentration SGTR	41A-88
41A-97	Case 3BE-8: Confined Compartment Steam Concentration SGTR	41A-89
41A-98	Case 3BE-8: Confined Compartment Oxygen Concentration SGTR	41A-89
41A-99	Case 3BE-8: Equivalence Ratio in SG Room SGTR	41A-90
41A-100	Case 3BE-8: Equivalence Ratio in CMT Room SGTR	41A-90
41A-101	Case 3BE-8: Equivalence Ratio in IRWST SGTR	41A-91
41A-102	Case 3BE-8: Equivalence Ratio in PXS SGTR	41A-91
41A-103	Case 3BE-9: Reactor Coolant System Pressure SGTR	41A-92
41A-104	Case 3BE-9: Core-Exit Gas Temperature SGTR	41A-92
41A-105	Case 3BE-9: Reactor Vessel Mixture Level SGTR	41A-93
41A-106	Case 3BE-9: Hydrogen Generated In-Vessel SGTR	41A-93
41A-107	Case 3BE-9: Containment Pressure SGTR	41A-94
41A-108	Case 3BE-9: Containment Gas Temperature SGTR	41A-94
41A-109	Case 3BE-9: Containment Compartments Water Level SGTR	41A-95
41A-110	Case 3BE-9: Well-Mixed Compartment Hydrogen Concentration SGTR	41A-95
41A-111	Case 3BE-9: Well-Mixed Compartment Steam Concentration SGTR	41A-96
41A-112	Case 3BE-9: Well-Mixed Compartment Oxygen Concentration SGTR	41A-96

LIST OF FIGURES (cont.)

Figure No.	Title	Page
41A-113	Case 3BE-9: Confined Compartment Hydrogen Concentration SGTR	41A-97
41A-114	Case 3BE-9: Confined Compartment Steam Concentration SGTR	41A-97
41A-115	Case 3BE-9: Confined Compartment Oxygen Concentration SGTR	41A-98
41A-116	Case 3BE-9: Equivalence Ratio in SG Room SGTR	41A-98
41A-117	Case 3BE-9: Equivalence Ratio in CMT Room SGTR	41A-99
41A-118	Case 3BE-9: Equivalence Ratio in IRWST SGTR	41A-99
41A-119	Case 3BE-9: Equivalence Ratio in PXS SGTR	41A-100
41A-120	Case 3BL-1: Reactor Coolant System Pressure SBLOCA with Failed Gravity Recirculation	41A-100
41A-121	Case 3BL-1: Core-Exit Gas Temperature SBLOCA with Failed Gravity Recirculation	41A-101
41A-122	Case 3BL-1: Reactor Vessel Mixture Level SBLOCA with Failed Gravity Recirculation	41A-101
41A-123	Case 3BL-1: Hydrogen Generated In-Vessel SBLOCA with Failed Gravity Recirculation	41A-102
41A-124	Case 3BL-1: Containment Pressure SBLOCA with Failed Gravity Recirculation	41A-102
41A-125	Case 3BL-1: Containment Gas Temperature SBLOCA with Failed Gravity Recirculation	41A-103
41A-126	Case 3BL-1: Containment Compartments Water Level SBLOCA with Failed Gravity Recirculation	41A-103
41A-127	Case 3BL-1: Well-Mixed Compartment Hydrogen Concentration SBLOCA with Failed Gravity Recirculation	41A-104
41A-128	Case 3BL-1: Well-Mixed Compartment Steam Concentration SBLOCA with Failed Gravity Recirculation	41A-104
41A-129	Case 3BL-1: Well-Mixed Compartment Oxygen Concentration SBLOCA with Failed Gravity Recirculation	41A-105
41A-130	Case 3BL-1: Confined Compartment Hydrogen Concentration SBLOCA with Failed Gravity Recirculation	41A-105
41A-131	Case 3BL-1: Confined Compartment Steam Concentration SBLOCA with Failed Gravity Recirculation	41A-106
41A-132	Case 3BL-1: Confined Compartment Oxygen Concentration SBLOCA with Failed Gravity Recirculation	41A-106
41A-133	Case 3BL-1: Equivalence Ratio in SG Room SBLOCA with Failed Gravity Recirculation	41A-107
41A-134	Case 3BL-1: Equivalence Ratio in CMT Room SBLOCA with Failed Gravity Recirculation	41A-107
41A-135	Case 3BL-1: Equivalence Ratio in IRWST SBLOCA with Failed Gravity Recirculation	41A-108
41A-136	Case 3BL-1: Equivalence Ratio in PXS SBLOCA with Failed Gravity Recirculation	41A-108
41A-137	Case 3BL-2: Reactor Coolant System Pressure DVI Line Break with Failed Gravity Recirculation	41A-109

LIST OF FIGURES (cont.)

Figure No.	Title	Page
41A-138	Case 3BL-2: Core-Exit Gas Temperature DVI Line Break with Failed Gravity Recirculation	41A-109
41A-139	Case 3BL-2: Reactor Vessel Mixture Level DVI Line Break with Failed Gravity Recirculation	41A-110
41A-140	Case 3BL-2: Hydrogen Generated In-Vessel DVI Line Break with Failed Gravity Recirculation	41A-110
41A-141	Case 3BL-2: Containment Pressure DVI Line Break with Failed Gravity Recirculation	41A-111
41A-142	Case 3BL-2: Containment Gas Temperature DVI Line Break with Failed Gravity Recirculation	41A-111
41A-143	Case 3BL-2: Containment Compartments Water Level DVI Line Break with Failed Gravity Recirculation	41A-112
41A-144	Case 3BL-2: Well-Mixed Compartment Hydrogen Concentration DVI Line Break with Failed Gravity Recirculation	41A-112
41A-145	Case 3BL-2: Well-Mixed Compartment Steam Concentration DVI Line Break with Failed Gravity Recirculation	41A-113
41A-146	Case 3BL-2: Well-Mixed Compartment Oxygen Concentration DVI Line Break with Failed Gravity Recirculation	41A-113
41A-147	Case 3BL-2: Confined Compartment Hydrogen Concentration DVI Line Break with Failed Gravity Recirculation	41A-114
41A-148	Case 3BL-2: Confined Compartment Steam Concentration DVI Line Break with Failed Gravity Recirculation	41A-114
41A-149	Case 3BL-2: Confined Compartment Oxygen Concentration DVI Line Break with Failed Gravity Recirculation	41A-115
41A-150	Case 3BL-2: Equivalence Ratio in SG Room DVI Line Break with Failed Gravity Recirculation	41A-115
41A-151	Case 3BL-2: Equivalence Ratio in CMT Room DVI Line Break with Failed Gravity Recirculation	41A-116
41A-152	Case 3BL-2: Equivalence Ratio in IRWST DVI Line Break with Failed Gravity Recirculation	41A-116
41A-153	Case 3BL-2: Equivalence Ratio in PXS DVI Line Break with Failed Gravity Recirculation	41A-117
41A-154	Case 3BR-1: Reactor Coolant System Pressure CL LBLOCA with Accumulator Failure	41A-117
41A-155	Case 3BR-1: Core-Exit Gas Temperature CL LBLOCA with Accumulator Failure	41A-118
41A-156	Case 3BR-1: Reactor Vessel Mixture Level CL LBLOCA with Accumulator Failure	41A-118
41A-157	Case 3BR-1: Hydrogen Generated In-Vessel CL LBLOCA with Accumulator Failure	41A-119
41A-158	Case 3BR-1: Containment Pressure CL LBLOCA with Accumulator Failure	41A-119

LIST OF FIGURES (cont.)

Figure No.	Title	Page
41A-159	Case 3BR-1: Containment Gas Temperature CL LBLOCA with ccumulator Failure	41A-120
41A-160	Case 3BR-1: Containment Compartments Water Level CL LBLOCA with Accumulator Failure	41A-120
41A-161	Case 3BR-1: Well-Mixed Compartment Hydrogen Concentration CL LBLOCA with Accumulator Failure	41A-121
41A-162	Case 3BR-1: Well-Mixed Compartment Steam Concentration CL LBLOCA with Accumulator Failure	41A-121
41A-163	Case 3BR-1: Well-Mixed Compartment Oxygen Concentration CL LBLOCA with Accumulator Failure	41A-122
41A-164	Case 3BR-1: Confined Compartment Hydrogen Concentration CL LBLOCA with Accumulator Failure	41A-122
41A-165	Case 3BR-1: Confined Compartment Steam Concentration CL LBLOCA with Accumulator Failure	41A-123
41A-166	Case 3BR-1: Confined Compartment Oxygen Concentration CL LBLOCA with Accumulator Failure	41A-123
41A-167	Case 3BR-1: Equivalence Ratio in SG Room CL LBLOCA with Accumulator Failure	41A-124
41A-168	Case 3BR-1: Equivalence Ratio in CMT Room CL LBLOCA with Accumulator Failure	41A-124
41A-169	Case 3BR-1: Equivalence Ratio in IRWST CL LBLOCA with Accumulator Failure	41A-125
41A-170	Case 3BR-1: Equivalence Ratio in PXS CL LBLOCA with Accumulator Failure	41A-125
41A-171	Case 3BR-1a: Reactor Coolant System Pressure CL LBLOCA with Accumulator Failure	41A-126
41A-172	Case 3BR-1a: Core-Exit Gas Temperature CL LBLOCA with Accumulator Failure	41A-126
41A-173	Case 3BR-1a: Reactor Vessel Mixture Level CL LBLOCA with Accumulator Failure	41A-127
41A-174	Case 3BR-1a: Hydrogen Generated In-Vessel CL LBLOCA with Accumulator Failure	41A-127
41A-175	Case 3BR-1a: Containment Pressure CL LBLOCA with Accumulator Failure	41A-128
41A-176	Case 3BR-1a: Containment Gas Temperature CL LBLOCA with Accumulator Failure	41A-128
41A-177	Case 3BR-1a: Containment Compartments Water Level CL LBLOCA with Accumulator Failure	41A-129
41A-178	Case 3BR-1a: Well-Mixed Compartment Hydrogen Concentration CL LBLOCA with Accumulator Failure	41A-129
41A-179	Case 3BR-1a: Well-Mixed Compartment Steam Concentration CL LBLOCA with Accumulator Failure	41A-130

LIST OF FIGURES (cont.)

Figure No.	Title	Page
41A-180	Case 3BR-1a: Well-Mixed Compartment Oxygen Concentration CL LBLOCA with Accumulator Failure	41A-130
41A-181	Case 3BR-1a: Confined Compartment Hydrogen Concentration CL LBLOCA with Accumulator Failure	41A-131
41A-182	Case 3BR-1a: Confined Compartment Steam Concentration CL LBLOCA with Accumulator Failure	41A-131
41A-183	Case 3BR-1a: Confined Compartment Oxygen Concentration CL LBLOCA with Accumulator Failure	41A-132
41A-184	Case 3BR-1a: Equivalence Ratio in SG Room CL LBLOCA with Accumulator Failure	41A-132
41A-185	Case 3BR-1a: Equivalence Ratio in CMT Room CL LBLOCA with Accumulator Failure	41A-133
41A-186	Case 3BR-1a: Equivalence Ratio in IRWST CL LBLOCA with Accumulator Failure	41A-133
41A-187	Case 3BR-1a: Equivalence Ratio in PXS CL LBLOCA with Accumulator Failure	41A-134
41A-188	Case 3C-1: Reactor Coolant System Pressure Vessel Rupture	41A-134
41A-189	Case 3C-1: Core-Exit Gas Temperature Vessel Rupture	41A-135
41A-190	Case 3C-1: Reactor Vessel Mixture Level Vessel Rupture	41A-135
41A-191	Case 3C-1: Hydrogen Generated In-Vessel Vessel Rupture	41A-136
41A-192	Case 3C-1: Containment Pressure Vessel Rupture	41A-136
41A-193	Case 3C-1: Containment Gas Temperature Vessel Rupture	41A-137
41A-194	Case 3C-1: Containment Compartments Water Level Vessel Rupture	41A-137
41A-195	Case 3C-1: Well-Mixed Compartment Hydrogen Concentration Vessel Rupture	41A-138
41A-196	Case 3C-1: Well-Mixed Compartment Steam Concentration Vessel Rupture	41A-138
41A-197	Case 3C-1: Well-Mixed Compartment Oxygen Concentration Vessel Rupture	41A-139
41A-198	Case 3C-1: Confined Compartment Hydrogen Concentration Vessel Rupture	41A-139
41A-199	Case 3C-1: Confined Compartment Steam Concentration Vessel Rupture	41A-140
41A-200	Case 3C-1: Confined Compartment Oxygen Concentration Vessel Rupture	41A-140
41A-201	Case 3C-1: Equivalence Ratio in SG Room Vessel Rupture	41A-141
41A-202	Case 3C-1: Equivalence Ratio in CMT Room Vessel Rupture	41A-141
41A-203	Case 3C-1: Equivalence Ratio in IRWST Vessel Rupture	41A-142
41A-204	Case 3C-1: Equivalence Ratio in PXS Vessel Rupture	41A-142
41A-205	Case 3D-1: Reactor Coolant System Pressure Spurious ADS-4 with Failed CMTs	41A-143
41A-206	Case 3D-1: Core-Exit Gas Temperature Spurious ADS-4 with Failed CMTs	41A-143

LIST OF FIGURES (cont.)

Figure No.	Title	Page
41A-207	Case 3D-1: Reactor Vessel Mixture Level Spurious ADS-4 with Failed CMTs	41A-144
41A-208	Case 3D-1: Hydrogen Generated In-Vessel Spurious ADS-4 with Failed CMTs	41A-144
41A-209	Case 3D-1: Containment Pressure Spurious ADS-4 with Failed CMTs	41A-145
41A-210	Case 3D-1: Containment Gas Temperature Spurious ADS-4 with Failed CMTs	41A-145
41A-211	Case 3D-1: Containment Compartments Water Level Spurious ADS-4 with Failed CMTs	41A-146
41A-212	Case 3D-1: Well-Mixed Compartment Hydrogen Concentration Spurious ADS-4 with Failed CMTs	41A-146
41A-213	Case 3D-1: Well-Mixed Compartment Steam Concentration Spurious ADS-4 with Failed CMTs	41A-147
41A-214	Case 3D-1: Well-Mixed Compartment Oxygen Concentration Spurious ADS-4 with Failed CMTs	41A-147
41A-215	Case 3D-1: Confined Compartment Hydrogen Concentration Spurious ADS-4 with Failed CMTs	41A-148
41A-216	Case 3D-1: Confined Compartment Steam Concentration Spurious ADS-4 with Failed CMTs	41A-148
41A-217	Case 3D-1: Confined Compartment Oxygen Concentration Spurious ADS-4 with Failed CMTs	41A-149
41A-218	Case 3D-1: Equivalence Ratio in SG Room Spurious ADS-4 with Failed CMTs	41A-149
41A-219	Case 3D-1: Equivalence Ratio in CMT Room Spurious ADS-4 with Failed CMTs	41A-150
41A-220	Case 3D-1: Equivalence Ratio in IRWST Spurious ADS-4 with Failed CMTs	41A-150
41A-221	Case 3D-1: Equivalence Ratio in PXS Spurious ADS-4 with Failed CMTs	41A-151
41A-222	Case 3D-2: Reactor Coolant System Pressure Spurious ADS-2, Failed CMTs	41A-151
41A-223	Case 3D-2: Core-Exit Gas Temperature Spurious ADS-2, Failed CMTs	41A-152
41A-224	Case 3D-2: Reactor Vessel Mixture Level Spurious ADS-2, Failed CMTs	41A-152
41A-225	Case 3D-2: Hydrogen Generated In-Vessel Spurious ADS-2, Failed CMTs	41A-153
41A-226	Case 3D-2: Containment Pressure Spurious ADS-2, Failed CMTs	41A-153
41A-227	Case 3D-2: Containment Gas Temperature Spurious ADS-2, Failed CMTs	41A-154
41A-228	Case 3D-2: Containment Compartments Water Level Spurious ADS-2, Failed CMTs	41A-154

LIST OF FIGURES (cont.)

Figure No.	Title	Page
41A-229	Case 3D-2: Well-Mixed Compartment Hydrogen Concentration Spurious ADS-2, Failed CMTs	41A-155
41A-230	Case 3D-2: Well-Mixed Compartment Steam Concentration Spurious ADS-2, Failed CMTs	41A-155
41A-231	Case 3D-2: Well-Mixed Compartment Oxygen Concentration Spurious ADS-2, Failed CMTs	41A-156
41A-232	Case 3D-2: Confined Compartment Hydrogen Concentration Spurious ADS-2, Failed CMTs	41A-156
41A-233	Case 3D-2: Confined Compartment Steam Concentration Spurious ADS-2, Failed CMTs	41A-157
41A-234	Case 3D-2: Confined Compartment Oxygen Concentration Spurious ADS-2, Failed CMTs	41A-157
41A-235	Case 3D-2: Equivalence Ratio in SG Room Spurious ADS-2, Failed CMTs	41A-158
41A-236	Case 3D-2: Equivalence Ratio in CMT Room Spurious ADS-2, Failed CMTs	41A-158
41A-237	Case 3D-2: Equivalence Ratio in IRWST Spurious ADS-2, Failed CMTs	41A-159
41A-238	Case 3D-2: Equivalence Ratio in PXS Spurious ADS-2, Failed CMTs	41A-159
41A-239	Case 3D-3: Reactor Coolant System Pressure DVI Line Break with no ADS	41A-160
41A-240	Case 3D-3: Core-Exit Gas Temperature DVI Line Break with no ADS	41A-160
41A-241	Case 3D-3: Reactor Vessel Mixture Level DVI Line Break with no ADS	41A-161
41A-242	Case 3D-3: Hydrogen Generated In-Vessel DVI Line Break with no ADS	41A-161
41A-243	Case 3D-3: Containment Pressure DVI Line Break with no ADS	41A-162
41A-244	Case 3D-3: Containment Gas Temperature DVI Line Break with no ADS	41A-162
41A-245	Case 3D-3: Containment Compartments Water Level DVI Line Break with no ADS	41A-163
41A-246	Case 3D-3: Well-Mixed Compartment Hydrogen Concentration DVI Line Break with no ADS	41A-163
41A-247	Case 3D-3: Well-Mixed Compartment Steam Concentration DVI Line Break with no ADS	41A-164
41A-248	Case 3D-3: Well-Mixed Compartment Oxygen Concentration DVI Line Break with no ADS	41A-164
41A-249	Case 3D-3: Confined Compartment Hydrogen Concentration DVI Line Break with no ADS	41A-165
41A-250	Case 3D-3: Confined Compartment Steam Concentration DVI Line Break with no ADS	41A-165
41A-251	Case 3D-3: Confined Compartment Oxygen Concentration DVI Line Break with no ADS	41A-166

LIST OF FIGURES (cont.)

Figure No.	Title	Page
41A-252	Case 3D-3: Equivalence Ratio in SG Room DVI Line Break with no ADS	41A-166
41A-253	Case 3D-3: Equivalence Ratio in CMT Room DVI Line Break with no ADS	41A-167
41A-254	Case 3D-3: Equivalence Ratio in IRWST DVI Line Break with no ADS	41A-167
41A-255	Case 3D-3: Equivalence Ratio in PXS DVI Line Break with no ADS	41A-168
41A-256	Case 3D-5: Reactor Coolant System Pressure Spurious ADS-2, Failed CMTs, Diffusion Flame	41A-168
41A-257	Case 3D-5: Core-Exit Gas Temperature Spurious ADS-2, Failed CMTs, Diffusion Flame	41A-169
41A-258	Case 3D-5: Reactor Vessel Mixture Level Spurious ADS-2, Failed CMTs, Diffusion Flame	41A-169
41A-259	Case 3D-5: Hydrogen Generated In-Vessel Spurious ADS-2, Failed CMTs, Diffusion Flame	41A-170
41A-260	Case 3D-5: Containment Pressure Spurious ADS-2, Failed CMTs, Diffusion Flame	41A-170
41A-261	Case 3D-5: Containment Gas Temperature Spurious ADS-2, Failed CMTs, Diffusion Flame	41A-171
41A-262	Case 3D-5: Containment Compartments Water Level Spurious ADS-2, Failed CMTs, Diffusion Flame	41A-171
41A-263	Case 3D-5: Well-Mixed Compartment Hydrogen Concentration Spurious ADS-2, Failed CMTs, Diffusion Flame	41A-172
41A-264	Case 3D-5: Well-Mixed Compartment Steam Concentration Spurious ADS-2, Failed CMTs, Diffusion Flame	41A-172
41A-265	Case 3D-5: Well-Mixed Compartment Oxygen Concentration Spurious ADS-2, Failed CMTs, Diffusion Flame	41A-173
41A-266	Case 3D-5: Confined Compartment Hydrogen Concentration Spurious ADS-2, Failed CMTs, Diffusion Flame	41A-173
41A-267	Case 3D-5: Confined Compartment Steam Concentration Spurious ADS-2, Failed CMTs, Diffusion Flame	41A-174
41A-268	Case 3D-5: Confined Compartment Oxygen Concentration Spurious ADS-2, Failed CMTs, Diffusion Flame	41A-174
41A-269	Case 3D-5: Equivalence Ratio in SG Room Spurious ADS-2, Failed CMTs, Diffusion Flame	41A-175
41A-270	Case 3D-5: Equivalence Ratio in CMT Room Spurious ADS-2, Failed CMTs, Diffusion Flame	41A-175
41A-271	Case 3D-5: Equivalence Ratio in IRWST Spurious ADS-2, Failed CMTs, Diffusion Flame	41A-176
41A-272	Case 3D-5: Equivalence Ratio in PXS Spurious ADS-2, Failed CMTs, Diffusion Flame	41A-176
41A-273	Case 1A-3: Reactor Coolant System Pressure FW Failure with Creep of SG Tubes	41A-177

LIST OF FIGURES (cont.)

Figure No.	Title	Page
41A-274	Case 1A-3: Core-Exit Gas Temperature FW Failure with Creep of SG Tubes	41A-177
41A-275	Case 1A-3: Reactor Vessel Mixture Level FW Failure with Creep of SG Tubes	41A-178
41A-276	Case 1A-3: Hydrogen Generated In-Vessel FW Failure with Creep of SG Tubes	41A-178
41A-277	Case 1A-3: Containment Pressure FW Failure with Creep of SG Tubes	41A-179
41A-278	Case 1A-3: Containment Gas Temperature FW Failure with Creep of SG Tubes	41A-179
41A-279	Case 1A-3: Containment Compartments Water Level FW Failure with Creep of SG Tubes	41A-180
41A-280	Case 1A-3: Well-Mixed Compartment Hydrogen Concentration FW Failure with Creep of SG Tubes	41A-180
41A-281	Case 1A-3: Well-Mixed Compartment Steam Concentration FW Failure with Creep of SG Tubes	41A-181
41A-282	Case 1A-3: Well-Mixed Compartment Oxygen Concentration FW Failure with Creep of SG Tubes	41A-181
41A-283	Case 1A-3: Confined Compartment Hydrogen Concentration FW Failure with Creep of SG Tubes	41A-182
41A-284	Case 1A-3: Confined Compartment Steam Concentration FW Failure with Creep of SG Tubes	41A-182
41A-285	Case 1A-3: Confined Compartment Oxygen Concentration FW Failure with Creep of SG Tubes	41A-183
41A-286	Case 1A-3: Equivalence Ratio in SG Room FW Failure with Creep of SG Tubes	41A-183
41A-287	Case 1A-3: Equivalence Ratio in CMT Room FW Failure with Creep of SG Tubes	41A-184
41A-288	Case 1A-3: Equivalence Ratio in IRWST FW Failure with Creep of SG Tubes	41A-184
41A-289	Case 1A-3: Equivalence Ratio in PXS FW Failure with Creep of SG Tubes	41A-185
41A-290	Case 1A-3a: Reactor Coolant System Pressure Transient with Creep of SG Tubes	41A-185
41A-291	Case 1A-3a: Core-Exit Gas Temperature Transient with Creep of SG Tubes	41A-186
41A-292	Case 1A-3a: Reactor Vessel Mixture Level Transient with Creep of SG Tubes	41A-186
41A-293	Case 1A-3a: Hydrogen Generated In-Vessel Transient with Creep of SG Tubes	41A-187
41A-294	Case 1A-3a: Containment Pressure Transient with Creep of SG Tubes	41A-187
41A-295	Case 1A-3a: Containment Gas Temperature Transient with Creep of SG Tubes	41A-188
41A-296	Case 1A-3a: Containment Compartments Water Level Transient with Creep of SG Tubes	41A-188

LIST OF FIGURES (cont.)

Figure No.	Title	Page
41A-297	Case 1A-3a: Well-Mixed Compartment Hydrogen Concentration Transient with Creep of SG Tubes	41A-189
41A-298	Case 1A-3a: Well-Mixed Compartment Steam Concentration Transient with Creep of SG Tubes	41A-189
41A-299	Case 1A-3a: Well-Mixed Compartment Oxygen Concentration Transient with Creep of SG Tubes	41A-190
41A-300	Case 1A-3a: Confined Compartment Hydrogen Concentration Transient with Creep of SG Tubes	41A-190
41A-301	Case 1A-3a: Confined Compartment Steam Concentration Transient with Creep of SG Tubes	41A-191
41A-302	Case 1A-3a: Confined Compartment Oxygen Concentration Transient with Creep of SG Tubes	41A-191
41A-303	Case 1A-3a: Approximate Detonation Cell Width in SG Room Transient with Creep of SG Tubes	41A-192
41A-304	Case 1A-3a: Approximate Detonation Cell Width in CMT Room Transient with Creep of SG Tubes	41A-192
41A-305	Case 1A-3a: Equivalence Ratio in IRWST Transient with Creep of SG Tubes	41A-193
41A-306	Case 1A-3a: Approximate Detonation Cell Width in PXS Transient with Creep of SG Tubes	41A-193
41A-307	Case 1A-4: Reactor Coolant System Pressure FW Failure with Creep of SG Tubes	41A-194
41A-308	Case 1A-4: Core-Exit Gas Temperature FW Failure with Creep of SG Tubes	41A-194
41A-309	Case 1A-4: Reactor Vessel Mixture Level FW Failure with Creep of SG Tubes	41A-195
41A-310	Case 1A-4: Hydrogen Generated In-Vessel FW Failure with Creep of SG Tubes	41A-195
41A-311	Case 1A-4: Containment Pressure FW Failure with Creep of SG Tubes	41A-196
41A-312	Case 1A-4: Containment Gas Temperature FW Failure with Creep of SG Tubes	41A-196
41A-313	Case 1A-4: Containment Compartments Water Level FW Failure with Creep of SG Tubes	41A-197
41A-314	Case 1A-4: Well-Mixed Compartment Hydrogen Concentration FW Failure with Creep of SG Tubes	41A-197
41A-315	Case 1A-4: Well-Mixed Compartment Steam Concentration FW Failure with Creep of SG Tubes	41A-198
41A-316	Case 1A-4: Well-Mixed Compartment Oxygen Concentration FW Failure with Creep of SG Tubes	41A-198
41A-317	Case 1A-4: Confined Compartment Hydrogen Concentration FW Failure with Creep of SG Tubes	41A-199
41A-318	Case 1A-4: Confined Compartment Steam Concentration FW Failure with Creep of SG Tubes	41A-199

LIST OF FIGURES (cont.)

Figure No.	Title	Page
41A-319	Case 1A-4: Confined Compartment Oxygen Concentration FW Failure with Creep of SG Tubes	41A-200
41A-320	Case 1A-4: Equivalence Ratio in SG Room FW Failure with Creep of SG Tubes	41A-200
41A-321	Case 1A-4: Equivalence Ratio in CMT Room FW Failure with Creep of SG Tubes	41A-201
41A-322	Case 1A-4: Equivalence Ratio in IRWST FW Failure with Creep of SG Tubes	41A-201
41A-323	Case 1A-4: Equivalence Ratio in PXS FW Failure with Creep of SG Tubes	41A-202
41A-324	Case 1A-4a: Reactor Coolant System Pressure Transient with Creep of SG Tubes	41A-202
41A-325	Case 1A-4a: Core-Exit Gas Temperature Transient with Creep of SG Tubes	41A-203
41A-326	Case 1A-4a: Reactor Vessel Mixture Level Transient with Creep of SG Tubes	41A-203
41A-327	Case 1A-4a: Hydrogen Generated In-Vessel Transient with Creep of SG Tubes	41A-204
41A-328	Case 1A-4a: Containment Pressure Transient with Creep of SG Tubes	41A-204
41A-329	Case 1A-4a: Containment Gas Temperature Transient with Creep of SG Tubes	41A-205
41A-330	Case 1A-4a: Containment Compartments Water Level Transient with Creep of SG Tubes	41A-205
41A-331	Case 1A-4a: Well-Mixed Compartment Hydrogen Concentration Transient with Creep of SG Tubes	41A-206
41A-332	Case 1A-4a: Well-Mixed Compartment Steam Concentration Transient with Creep of SG Tubes	41A-206
41A-333	Case 1A-4a: Well-Mixed Compartment Oxygen Concentration Transient with Creep of SG Tubes	41A-207
41A-334	Case 1A-4a: Confined Compartment Hydrogen Concentration Transient with Creep of SG Tubes	41A-207
41A-335	Case 1A-4a: Confined Compartment Steam Concentration Transient with Creep of SG Tubes	41A-208
41A-336	Case 1A-4a: Confined Compartment Oxygen Concentration Transient with Creep of SG Tubes	41A-208
41A-337	Case 1A-4a: Approximate Detonation Cell Width in SG Room Transient with Creep of SG Tubes	41A-209
41A-338	Case 1A-4a: Equivalence Ratio in CMT Room Transient with Creep of SG Tubes	41A-209
41A-339	Case 1A-4a: Equivalence Ratio in IRWST Transient with Creep of SG Tubes	41A-210
41A-340	Case 1A-4a: Equivalence Ratio in PXS Transient with Creep of SG Tubes	41A-210
41A-341	Case 1AP-3: Reactor Coolant System Pressure SBLOCA, Failed PRHR and CMTs	41A-211

LIST OF FIGURES (cont.)

Figure No.	Title	Page
41A-342	Case 1AP-3: Core-Exit Gas Temperature SBLOCA, Failed PRHR and CMTs	41A-211
41A-343	Case 1AP-3: Reactor Vessel Mixture Level SBLOCA, Failed PRHR and CMTs	41A-212
41A-344	Case 1AP-3: Hydrogen Generated In-Vessel SBLOCA, Failed PRHR and CMTs	41A-212
41A-345	Case 1AP-3: Containment Pressure SBLOCA, Failed PRHR and CMTs	41A-213
41A-346	Case 1AP-3: Containment Gas Temperature SBLOCA, Failed PRHR and CMTs	41A-213
41A-347	Case 1AP-3: Containment Compartments Water Level SBLOCA, Failed PRHR and CMTs	41A-214
41A-348	Case 1AP-3: Well-Mixed Compartment Hydrogen Concentration SBLOCA, Failed PRHR and CMTs	41A-214
41A-349	Case 1AP-3: Well-Mixed Compartment Steam Concentration SBLOCA, Failed PRHR and CMTs	41A-215
41A-350	Case 1AP-3: Well-Mixed Compartment Oxygen Concentration SBLOCA, Failed PRHR and CMTs	41A-215
41A-351	Case 1AP-3: Confined Compartment Hydrogen Concentration SBLOCA, Failed PRHR and CMTs	41A-216
41A-352	Case 1AP-3: Confined Compartment Steam Concentration SBLOCA, Failed PRHR and CMTs	41A-216
41A-353	Case 1AP-3: Confined Compartment Oxygen Concentration SBLOCA, Failed PRHR and CMTs	41A-217
41A-354	Case 1AP-3: Equivalence Ratio in SG Room SBLOCA, Failed PRHR and CMTs	41A-217
41A-355	Case 1AP-3: Equivalence Ratio in CMT Room SBLOCA, Failed PRHR and CMTs	41A-218
41A-356	Case 1AP-3: Equivalence Ratio in IRWST SBLOCA, Failed PRHR and CMTs	41A-218
41A-357	Case 1AP-3: Equivalence Ratio in PXS SBLOCA, Failed PRHR and CMTs	41A-219
41A-358	Case 1AP-4: Reactor Coolant System Pressure SBLOCA with Failed PRHR and ADS	41A-219
41A-359	Case 1AP-4: Core-Exit Gas Temperature SBLOCA with Failed PRHR and ADS	41A-220
41A-360	Case 1AP-4: Reactor Vessel Mixture Level SBLOCA with Failed PRHR and ADS	41A-220
41A-361	Case 1AP-4: Hydrogen Generated In-Vessel SBLOCA with Failed PRHR and ADS	41A-221
41A-362	Case 1AP-4: Containment Pressure SBLOCA with Failed PRHR and ADS	41A-221
41A-363	Case 1AP-4: Containment Gas Temperature SBLOCA with Failed PRHR and ADS	41A-222

LIST OF FIGURES (cont.)

Figure No.	Title	Page
41A-364	Case 1AP-4: Containment Compartments Water Level SBLOCA with Failed PRHR and ADS	41A-222
41A-365	Case 1AP-4: Well-Mixed Compartment Hydrogen Concentration SBLOCA with Failed PRHR and ADS	41A-223
41A-366	Case 1AP-4: Well-Mixed Compartment Steam Concentration SBLOCA with Failed PRHR and ADS	41A-223
41A-367	Case 1AP-4: Well-Mixed Compartment Oxygen Concentration SBLOCA with Failed PRHR and ADS	41A-224
41A-368	Case 1AP-4: Confined Compartment Hydrogen Concentration SBLOCA with Failed PRHR and ADS	41A-224
41A-369	Case 1AP-4: Confined Compartment Steam Concentration SBLOCA with Failed PRHR and ADS	41A-225
41A-370	Case 1AP-4: Confined Compartment Oxygen Concentration SBLOCA with Failed PRHR and ADS	41A-225
41A-371	Case 1AP-4: Equivalence Ratio in SG Room SBLOCA with Failed PRHR and ADS	41A-226
41A-372	Case 1AP-4: Equivalence Ratio in CMT Room SBLOCA with Failed PRHR and ADS	41A-226
41A-373	Case 1AP-4: Equivalence Ratio in IRWST SBLOCA with Failed PRHR and ADS	41A-227
41A-374	Case 1AP-4: Equivalence Ratio in PXS SBLOCA with Failed PRHR and ADS	41A-227
41B-1	Case 3BR – LLOCA with Accumulator Failure Reactor Coolant System Pressure	41B-3
41B-2	Case 3BR – LLOCA with Accumulator Failure Reactor Vessel Mixture Level	41B-3
41B-3	Case 3BR – LLOCA with Accumulator Failure Core-Exit Gas Temperature	41B-4
41B-4	Case 3BR – LLOCA with Accumulator Failure Hydrogen Generated In-Vessel	41B-4
41B-5	Case 3BR – LLOCA with Accumulator Failure Containment Pressure	41B-5
41B-6	Case 3BR – LLOCA with Accumulator Failure Containment Gas Temperature	41B-5
41B-7	Case 3BR – LLOCA with Accumulator Failure Containment Compartment Hydrogen Concentration	41B-6
41B-8	Case 3BR – LLOCA with Accumulator Failure Hydrogen Flow Rate Through Break	41B-6
41B-9	Case 3BR – LLOCA with Accumulator Failure Well-Mixed Compartment Hydrogen Concentration	41B-7
41B-10	Case 3BR – LLOCA with Accumulator Failure Well-Mixed Compartment Oxygen Concentration	41B-7
41B-11	Case 3BR – LLOCA with Accumulator Failure Well-Mixed Compartment Steam Concentration	41B-8

LIST OF FIGURES (cont.)

Figure No.	Title	Page
41B-12	Case 3BR – LLOCA with Accumulator Failure Approximate Detonation Cell Width in Steam Generator Compartment	41B-8
41B-13	Case 3BR – LLOCA with Accumulator Failure Containment Compartments Water Level	41B-9
41B-14	Case 3BR – LLOCA with Accumulator Failure Hydrogen Flow Rate Through ADS to IRWST	41B-9
41B-15	Case 3BR – LLOCA with Accumulator Failure Confined Compartment Hydrogen Concentration	41B-10
41B-16	Case 3BR – LLOCA with Accumulator Failure Confined Compartment Oxygen Concentration	41B-10
41B-17	Case 3BR – LLOCA with Accumulator Failure Confined Compartment Steam Concentration	41B-11
42-1	AP1000 Containment Fragility at Containment Temperature of 400°F	42-11
42-2	AP1000 Containment Fragility at Containment Temperature of 331°F	42-12
43-1	Plant Damage State Contributions to CDF	43-94
43-2	Containment Event Tree – CET (Sheets 1 – 3)	43-95
43-3	3BE CET (Sheets 1 – 3)	43-98
43-4	3BL CET (Sheets 1 – 3)	43-101
43-5	3BR CET (Sheets 1 – 3)	43-104
43-6	1A CET (Sheets 1 – 3)	43-107
43-7	1AP CET (Sheets 1 – 3)	43-110
43-8	3A CET (Sheets 1 – 3)	43-113
43-9	3C CET (Sheets 1 – 3)	43-116
43-10	3D CET (Sheets 1 – 3)	43-119
43-11	6 CET (Sheets 1 – 3)	43-122
43-12	Contribution of PDS to LRF	43-125
43-13	Summary of CET Quantification (Sheets 1 – 2)	43-126
44-1	MAAP4 AP1000 Containment Nodalization	44-12
45-1	Release Category IC, Case 3BE-5 – SBLOCA with Failed Gravity Injection: Release Fraction of Noble Gases	45-7
45-2	Release Category IC, Case 3BE-5 – SBLOCA with Failed Gravity Injection: Release Fraction of Cesium Iodide	45-7
45-3	Release Category IC, Case 3BE-5 – SBLOCA with Failed Gravity Injection: Release Fraction of Tellurium Dioxide	45-8
45-4	Release Category IC, Case 3BE-5 – SBLOCA with Failed Gravity Injection: Release Fraction of Strontium Oxide	45-8
45-5	Release Category IC, Case 3BE-5 – SBLOCA with Failed Gravity Injection: Release Fraction of Molybdenum Dioxide	45-9

LIST OF FIGURES (cont.)

Figure No.	Title	Page
45-6	Release Category IC, Case 3BE-5 – SBLOCA with Failed Gravity Injection: Release Fraction of Cesium Hydroxide	45-9
45-7	Release Category IC, Case 3BE-5 – SBLOCA with Failed Gravity Injection: Release Fraction of Barium Oxide	45-10
45-8	Release Category IC, Case 3BE-5 – SBLOCA with Failed Gravity Injection: Release Fraction of Dilanthanum Trioxide	45-10
45-9	Release Category IC, Case 3BE-5 – SBLOCA with Failed Gravity Injection: Release Fraction of Cerium Dioxide	45-11
45-10	Release Category IC, Case 3BE-5 – SBLOCA with Failed Gravity Injection: Release Fraction of Tin	45-11
45-11	Release Category IC, Case 3BE-5 – SBLOCA with Failed Gravity Injection: Release Fraction of Tellurium	45-12
45-12	Release Category IC, Case 3BE-5 – SBLOCA with Failed Gravity Injection: Release Fraction of Uranium Dioxide	45-12
45-13	Release Category BP, Case 1A-2 – FW Failure with Creep of SG Tubes: Release Fraction of Noble Gases	45-13
45-14	Release Category BP, Case 1A-2 – FW Failure with Creep of SG Tubes: Release Fraction of Cesium Iodide	45-13
45-15	Release Category BP, Case 1A-2 – FW Failure with Creep of SG Tubes: Release Fraction of Tellurium Dioxide	45-14
45-16	Release Category BP, Case 1A-2 – FW Failure with Creep of SG Tubes: Release Fraction of Strontium Oxide	45-14
45-17	Release Category BP, Case 1A-2 – FW Failure with Creep of SG Tubes: Release Fraction of Molybdenum Dioxide	45-15
45-18	Release Category BP, Case 1A-2 – FW Failure with Creep of SG Tubes: Release Fraction of Cesium Hydroxide	45-15
45-19	Release Category BP, Case 1A-2 – FW Failure with Creep of SG Tubes: Release Fraction of Barium Oxide	45-16
45-20	Release Category BP, Case 1A-2 – FW Failure with Creep of SG Tubes: Release Fraction of Dilanthanum Trioxide	45-16
45-21	Release Category BP, Case 1A-2 – FW Failure with Creep of SG Tubes: Release Fraction of Cerium Dioxide	45-17
45-22	Release Category BP, Case 1A-2 – FW Failure with Creep of SG Tubes: Release Fraction of Tin	45-17
45-23	Release Category BP, Case 1A-2 – FW Failure with Creep of SG Tubes: Release Fraction of Tellurium	45-18
45-24	Release Category BP, Case 1A-2 – FW Failure with Creep of SG Tubes: Release Fraction of Uranium Dioxide	45-18
45-25	Release Category CI, Case 3C-2 – Vessel Rupture with Containment Failure: Release Fraction of Noble Gases	45-19
45-26	Release Category CI, Case 3C-2 – Vessel Rupture with Containment Failure: Release Fraction of Cesium Iodide	45-19

LIST OF FIGURES (cont.)

Figure No.	Title	Page
45-27	Release Category CI, Case 3C-2 – Vessel Rupture with Containment Failure: Release Fraction of Tellurium Dioxide	45-20
45-28	Release Category CI, Case 3C-2 – Vessel Rupture with Containment Failure: Release Fraction of Strontium Oxide	45-20
45-29	Release Category CI, Case 3C-2 – Vessel Rupture with Containment Failure: Release Fraction of Molybdenum Dioxide	45-21
45-30	Release Category CI, Case 3C-2 – Vessel Rupture with Containment Failure: Release Fraction of Cesium Hydroxide	45-21
45-31	Release Category CI, Case 3C-2 – Vessel Rupture with Containment Failure: Release Fraction of Barium Oxide	45-22
45-32	Release Category CI, Case 3C-2 – Vessel Rupture with Containment Failure: Release Fraction of Dilanthanum Trioxide	45-22
45-33	Release Category CI, Case 3C-2 – Vessel Rupture with Containment Failure: Release Fraction of Cerium Dioxide	45-23
45-34	Release Category CI, Case 3C-2 – Vessel Rupture with Containment Failure: Release Fraction of Tin	45-23
45-35	Release Category CI, Case 3C-2 – Vessel Rupture with Containment Failure: Release Fraction of Tellurium	45-24
45-36	Release Category CI, Case 3C-2 – Vessel Rupture with Containment Failure: Release Fraction of Uranium Dioxide	45-24
45-37	Release Category CFE, Case 3D-4 – Spurious ADS-2, Failed CMTs, Diffusion Flame: Release Fraction of Noble Gases	45-25
45-38	Release Category CFE, Case 3D-4 – Spurious ADS-2, Failed CMTs, Diffusion Flame: Release Fraction of Cesium Iodide	45-25
45-39	Release Category CFE, Case 3D-4 – Spurious ADS-2, Failed CMTs, Diffusion Flame: Release Fraction of Tellurium Dioxide	45-26
45-40	Release Category CFE, Case 3D-4 – Spurious ADS-2, Failed CMTs, Diffusion Flame: Release Fraction of Strontium Oxide	45-26
45-41	Release Category CFE, Case 3D-4 – Spurious ADS-2, Failed CMTs, Diffusion Flame: Release Fraction of Molybdenum Dioxide	45-27
45-42	Release Category CFE, Case 3D-4 – Spurious ADS-2, Failed CMTs, Diffusion Flame: Release Fraction of Cesium Hydroxide	45-27
45-43	Release Category CFE, Case 3D-4 – Spurious ADS-2, Failed CMTs, Diffusion Flame: Release Fraction of Barium Oxide	45-28
45-44	Release Category CFE, Case 3D-4 – Spurious ADS-2, Failed CMTs, Diffusion Flame: Release Fraction of Dilanthanum Trioxide	45-28
45-45	Release Category CFE, Case 3D-4 – Spurious ADS-2, Failed CMTs, Diffusion Flame: Release Fraction of Cerium Dioxide	45-29
45-46	Release Category CFE, Case 3D-4 – Spurious ADS-2, Failed CMTs, Diffusion Flame: Release Fraction of Tin	45-29
45-47	Release Category CFE, Case 3D-4 – Spurious ADS-2, Failed CMTs, Diffusion Flame: Release Fraction of Tellurium	45-30

LIST OF FIGURES (cont.)

Figure No.	Title	Page
45-48	Release Category CFE, Case 3D-4 – Spurious ADS-2, Failed CMTs, Diffusion Flame: Release Fraction of Uranium Dioxide	45-30
45-49	Release Category CFI, Case 3BE-3 – DVI Line Break, Failed Gravity Injection, No PXS Flooding: Release Fraction of Noble Gases	45-31
45-50	Release Category CFI, Case 3BE-3 – DVI Line Break, Failed Gravity Injection, No PXS Flooding: Release Fraction of Cesium Iodide	45-31
45-51	Release Category CFI, Case 3BE-3 – DVI Line Break, Failed Gravity Injection, No PXS Flooding: Release Fraction of Tellurium Dioxide	45-32
45-52	Release Category CFI, Case 3BE-3 – DVI Line Break, Failed Gravity Injection, No PXS Flooding: Release Fraction of Strontium Oxide	45-32
45-53	Release Category CFI, Case 3BE-3 – DVI Line Break, Failed Gravity Injection, No PXS Flooding: Release Fraction of Molybdenum Dioxide	45-33
45-54	Release Category CFI, Case 3BE-3 – DVI Line Break, Failed Gravity Injection, No PXS Flooding: Release Fraction of Cesium Hydroxide	45-33
45-55	Release Category CFI, Case 3BE-3 – DVI Line Break, Failed Gravity Injection, No PXS Flooding: Release Fraction of Barium Oxide	45-34
45-56	Release Category CFI, Case 3BE-3 – DVI Line Break, Failed Gravity Injection, No PXS Flooding: Release Fraction of Dilanthanum Trioxide	45-34
45-57	Release Category CFI, Case 3BE-3 – DVI Line Break, Failed Gravity Injection, No PXS Flooding: Release Fraction of Cerium Dioxide	45-35
45-58	Release Category CFI, Case 3BE-3 – DVI Line Break, Failed Gravity Injection, No PXS Flooding: Release Fraction of Tin	45-35
45-59	Release Category CFI, Case 3BE-3 – DVI Line Break, Failed Gravity Injection, No PXS Flooding: Release Fraction of Tellurium	45-36
45-60	Release Category CFI, Case 3BE-3 – DVI Line Break, Failed Gravity Injection, No PXS Flooding: Release Fraction of Uranium Dioxide	45-36
45-61	Release Category CFL, Case 3BE-7 – SBLOCA with Failed Gravity Injection: Release Fraction of Noble Gases	45-37
45-62	Release Category CFL, Case 3BE-7 – SBLOCA with Failed Gravity Injection: Release Fraction of Cesium Iodide	45-37
45-63	Release Category CFL, Case 3BE-7 – SBLOCA with Failed Gravity Injection: Release Fraction of Tellurium Dioxide	45-38
45-64	Release Category CFL, Case 3BE-7 – SBLOCA with Failed Gravity Injection: Release Fraction of Strontium Oxide	45-38
45-65	Release Category CFL, Case 3BE-7 – SBLOCA with Failed Gravity Injection: Release Fraction of Molybdenum Dioxide	45-39
45-66	Release Category CFL, Case 3BE-7 – SBLOCA with Failed Gravity Injection: Release Fraction of Cesium Hydroxide	45-39
45-67	Release Category CFL, Case 3BE-7 – SBLOCA with Failed Gravity Injection: Release Fraction of Barium Oxide	45-40
45-68	Release Category CFL, Case 3BE-7 – SBLOCA with Failed Gravity Injection: Release Fraction of Dilanthanum Trioxide	45-40

LIST OF FIGURES (cont.)

Figure No.	Title	Page
45-69	Release Category CFL, Case 3BE-7 – SBLOCA with Failed Gravity Injection: Release Fraction of Cerium Dioxide	45-41
45-70	Release Category CFL, Case 3BE-7 – SBLOCA with Failed Gravity Injection: Release Fraction of Tin	45-41
45-71	Release Category CFL, Case 3BE-7 – SBLOCA with Failed Gravity Injection: Release Fraction of Tellurium	45-42
45-72	Release Category CFL, Case 3BE-7 – SBLOCA with Failed Gravity Injection: Release Fraction of Uranium Dioxide	45-42
45-73	Release Category IC, Case 3BE-5 – SBLOCA with Failed Gravity Injection Direct-Release Sensitivity: Release Fraction of Noble Gases	45-43
45-74	Release Category IC, Case 3BE-5 – SBLOCA with Failed Gravity Injection Direct-Release Sensitivity: Release Fraction of Cesium Iodide	45-43
45-75	Release Category IC, Case 3BE-5 – SBLOCA with Failed Gravity Injection Direct-Release Sensitivity: Release Fraction of Tellurium Dioxide	45-44
45-76	Release Category IC, Case 3BE-5 – SBLOCA with Failed Gravity Injection Direct-Release Sensitivity: Release Fraction of Strontium Oxide	45-44
45-77	Release Category IC, Case 3BE-5 – SBLOCA with Failed Gravity Injection Direct-Release Sensitivity: Release Fraction of Molybdenum Dioxide	45-45
45-78	Release Category IC, Case 3BE-5 – SBLOCA with Failed Gravity Injection Direct-Release Sensitivity: Release Fraction of Cesium Hydroxide	45-45
45-79	Release Category IC, Case 3BE-5 – SBLOCA with Failed Gravity Injection Direct-Release Sensitivity: Release Fraction of Barium Oxide	45-46
45-80	Release Category IC, Case 3BE-5 – SBLOCA with Failed Gravity Injection Direct-Release Sensitivity: Release Fraction of Dilanthanum Trioxide	45-46
45-81	Release Category IC, Case 3BE-5 – SBLOCA with Failed Gravity Injection Direct-Release Sensitivity: Release Fraction of Cerium Dioxide	45-47
45-82	Release Category IC, Case 3BE-5 – SBLOCA with Failed Gravity Injection Direct-Release Sensitivity: Release Fraction of Tin	45-47
45-83	Release Category IC, Case 3BE-5 – SBLOCA with Failed Gravity Injection Direct-Release Sensitivity: Release Fraction of Tellurium	45-48
45-84	Release Category IC, Case 3BE-5 – SBLOCA with Failed Gravity Injection Direct-Release Sensitivity: Release Fraction of Uranium Dioxide	45-48
49-1	Population Whole Body Dose – BP Source Term, 24 Hours	49-20
49-2	Population Whole Body Dose – BP Source Term 72 Hours	49-20
49-3	Site Boundary Whole Body Dose – BP Source Term, 24 Hours	49-21
49-4	Site Boundary Whole Body Dose – BP Source Term, 72 Hours	49-21
49-5	Site Boundary Red Bone Marrow Dose – BP Source Term, 24 Hours	49-22
49-6	Site Boundary Red Bone Marrow Dose – BP Source Term, 72 Hours	49-22
49-7	Site Boundary Thyroid Dose – BP Source Term, 24 Hours	49-23
49-8	Site Boundary Thyroid Dose – BP Source Term, 72 Hours	49-23
49-9	Population Whole Body Dose – CFE Source Term, 24 Hours	49-24
49-10	Population Whole Body Dose – CFE Source Term, 72 Hours	49-24

LIST OF FIGURES (cont.)

Figure No.	Title	Page
49-11	Site Boundary Whole Body Dose – CFE Source Term, 24 Hours	49-25
49-12	Site Boundary Whole Body Dose – CFE Source Term, 72 Hours	49-25
49-13	Site Boundary Red Bone Marrow Dose – CFE Source Term, 24 Hours	49-26
49-14	Site Boundary Red Bone Marrow Dose – CFE Source Term, 72 Hours	49-26
49-15	Site Boundary Thyroid Dose – CFE Source Term, 24 Hours	49-27
49-16	Site Boundary Thyroid Dose – CFE Source Term, 72 Hours	49-27
49-17	Population Whole Body Dose – CFI Source Term, 24 Hours	49-28
49-18	Population Whole Body Dose – CFI Source Term, 72 Hours	49-28
49-19	Site Boundary Whole Body Dose – CFI Source Term, 24 Hours	49-29
49-20	Site Boundary Whole Body Dose – CFI Source Term, 72 Hours	49-29
49-21	Site Boundary Red Bone Marrow Dose – CFI Source Term, 24 Hours	49-30
49-22	Site Boundary Red Bone Marrow Dose – CFI Source Term, 72 Hours	49-30
49-23	Site Boundary Thyroid Dose – CFI Source Term, 24 Hours	49-31
49-24	Site Boundary Thyroid Dose – CFI Source Term, 72 Hours	49-31
49-25	Population Whole Body Dose – CFL Source Term, 24 Hours	49-32
49-26	Population Whole Body Dose – CFL Source Term, 72 Hours	49-32
49-27	Site Boundary Whole Body Dose – CFL Source Term, 24 Hours	49-33
49-28	Site Boundary Whole Body Dose – CFL Source Term, 72 Hours	49-33
49-29	Site Boundary Red Bone Marrow Dose – CFL Source Term, 24 Hours	49-34
49-30	Site Boundary Red Bone Marrow Dose – CFL Source Term, 72 Hours	49-34
49-31	Site Boundary Thyroid Dose – CFL Source Term, 24 Hours	49-35
49-32	Site Boundary Thyroid Dose – CFL Source Term, 72 Hours	49-35
49-33	Population Whole Body Dose – CI Source Term, 24 Hours	49-36
49-34	Population Whole Body Dose – CI Source Term, 72 Hours	49-36
49-35	Site Boundary Whole Body Dose – CI Source Term, 24 Hours	49-37
49-36	Site Boundary Whole Body Dose – CI Source Term, 72 Hours	49-37
49-37	Site Boundary Red Bone Marrow Dose – CI Source Term, 24 Hours	49-38
49-38	Site Boundary Red Bone Marrow Dose – CI Source Term, 72 Hours	49-38
49-39	Site Boundary Thyroid Dose – CI Source Term, 24 Hours	49-39
49-40	Site Boundary Thyroid Dose – CI Source Term, 72 Hours	49-39
49-41	Population Whole Body Dose – DIRECT Source Term, 24 Hours	49-40
49-42	Population Whole Body Dose – DIRECT Source Term, 72 Hours	49-40
49-43	Site Boundary Whole Body Dose – DIRECT Source Term, 24 Hours	49-41
49-44	Site Boundary Whole Body Dose – DIRECT Source Term, 72 Hours	49-41
49-45	Site Boundary Red Bone Marrow Dose – DIRECT Source Term, 24 Hours	49-42
49-46	Site Boundary Red Bone Marrow Dose – DIRECT Source Term, 72 Hours	49-42
49-47	Site Boundary Thyroid Dose – DIRECT Source Term, 24 Hours	49-43
49-48	Site Boundary Thyroid Dose – DIRECT Source Term, 72 Hours	49-43
49-49	Population Whole Body Dose – IC Source Term, 24 Hours	49-44
49-50	Population Whole Body Dose – IC Source Term, 72 Hours	49-44
49-51	Site Boundary Whole Body Dose – IC Source Term, 24 Hours	49-45
49-52	Site Boundary Whole Body Dose – IC Source Term, 72 Hours	49-45
49-53	Site Boundary Red Bone Marrow Dose – IC Source Term, 24 Hours	49-46

LIST OF FIGURES (cont.)

Figure No.	Title	Page
49-54	Site Boundary Red Bone Marrow Dose – IC Source Term, 72 Hours	49-46
49-55	Site Boundary Thyroid Dose – IC Source Term, 24 Hours	49-47
49-56	Site Boundary Thyroid Dose – IC Source Term, 72 Hours	49-47
49-57	Overall Dose Risk – Site Boundary Whole Body EDE Dose, 24 Hours	49-48
49-58	Overall Dose Risk – Site Boundary Red Bone Marrow Dose (Acute), 24 Hours	49-49
51-1	AP1000 Base Core Damage Frequency Uncertainty Analysis	51-11
51-2	AP1000 Sensitivity Case Uncertainty Analysis	51-11
51B-1	Distribution for Plant Core Damage Frequency	51B-2
51B-2	Safety Injection Line Break	51B-2
51B-3	Large LOCA	51B-3
51B-4	Large Spurious ADS Actuation	51B-3
51B-5	Small LOCA	51B-4
51B-6	Medium LOCA	51B-4
51B-7	Reactor Vessel Rupture	51B-5
51B-8	Steam Generator Tube Rupture	51B-5
51B-9	Safety Injection Line Break – Sequence 7	51B-6
51B-10	Large LOCA – Sequence 9	51B-6
51B-11	Spurious ADS – Sequence 8	51B-7
51B-12	Safety Injection Line Break – Sequence 8d	51B-7
51B-13	Reactor Vessel Rupture – Sequence 2	51B-8
51B-14	Small LOCA – Sequence 5	51B-8
51B-15	Medium LOCA – Sequence 5	51B-9
51B-16	Small LOCA – Sequence 12	51B-9
51B-17	Medium LOCA – Sequence 12	51B-10
51B-18	Spurious ADS – Sequence 9	51B-10
51B-19	Spurious ADS – Sequence 7	51B-11
51B-20	Safety Injection Line Break – Sequence 3	51B-11
51B-21	SGTR Event – Sequence 41	51B-12
51B-22	ATWS Precursor with no MFW – Sequence 23	51B-12
51B-23	Small LOCA – Sequence 9	51B-13
51B-24	Medium LOCA – Sequence 9	51B-13
51B-25	SGTR Event – Sequence 13	51B-14
51B-26	Large LOCA – Sequence 8	51B-14
51B-27	CMT Line Break – Sequence 5	51B-15
54-1	Loss of Offsite Power During Hot/Cold Shutdown (RCS Filled) Event Tree (Sheets 1 – 2)	54-64
54-2	Loss of RNS During Hot/Cold Shutdown (RCS Filled) Event Tree	54-66
54-3	Loss of CCW/SW During Hot/Cold Shutdown (RCS Filled) Event Tree	54-67
54-4	LOCA/RNS-V024 Opens During Hot/Cold Shutdown (RCS Filled) Event Tree	54-68
54-5	LOCA/RNS Pipe Rupture During Hot/Cold Shutdown (RCS Filled) Event Tree	54-69

LIST OF FIGURES (cont.)

Figure No.	Title	Page
54-6	Overdraining of Reactor Coolant System During Draindown to Mid-loop Event Tree	54-70
54-7	Loss of Offsite Power During RCS drained Condition Event Tree	54-71
54-8	Loss of RNS During RCS drained Condition Event Tree	54-72
54-9	Loss of CCW/SW During RCS drained Condition Event Tree	54-73
54-10	LOCA/RNS-V024 Opens During RCS drained Condition Event Tree	54-74
55-1	Seismic Initiating Event Hierarchy Tree	55-30
57-1	Example Event Tree Model	57-107
57-2	Contribution of Plant Areas to Fire CDF	57-108
57-3	Contribution of Fire Area to Fire CDF	57-109
57A-1	DAS-ACT Fault Tree	57A-37
57C-1	0000 AF 00 Yard Building (Including Transformer Yard)	57C-12
57C-2	1200 AF 01 RCA of Auxiliary Building (All Zones)	57C-13
57C-3	1200 AF 02 New Fuel and Used Fuel Storage, Waste Disposal Container (All Zones)	57C-14
57C-4	1200 AF 03 Corridors 100′ & 117′ 6″	57C-15
57C-5	1201 AF 02 Division B Batteries/DC Equipment Room/Instrumentation and Control	57C-16
57C-6	1201 AF 03 Division D DC Equipment/I&C	57C-17
57C-7	1201 AF 04 Division B/D VBS Equipment	57C-18
57C-8	1201 AF 05 MSIV Compartment A	57C-19
57C-9	1201 AF 06 MSIV Compartment B	57C-20
57C-10	1202 AF 02 Northeast Elevator Shaft	57C-21
57C-11	1202 AF 03 Division C Batteries/DC Equipment/I&C Room/ RCP Trip Switchgear Room/I&C Penetration Room	57C-22
57C-12	1202 AF 04 Division A Electrical Equipment/Battery Room/I&C Room	57C-23
57C-13	1204 AF 01 RNS Pump Room B	57C-24
57C-14	1204 AF 03 South Shield Building Elevator Shaft	57C-25
57C-15	1205 AF 02 Southeast Elevator Shaft	57C-26
57C-16	1210 AF 01 Corridor/Spare Battery Room/Spare Room/Spare Battery Charger Room	57C-27
57C-17	1220 AF 01 Division B RCP Trip Switchgear/Spare Room/Corridor 82′ 6″	57C-28
57C-18	1220 AF 02 Lower Annulus Valve Area	57C-29
57C-19	1230 AF 01 Corridor Division A, B, C, D and Remote Shutdown Workstation	57C-30
57C-20	1230 AF 02 Non-Class 1E Electrical Compartment - 100′	57C-31
57C-21	1232 AF 01 Remote Shutdown Workstation	57C-32
57C-22	1240 AF 01 Non-Class 1E Electrical Compartment - 117′	57C-33
57C-23	1242 AF 02 Division A Penetration Area	57C-34
57C-24	1243 AF 01 Reactor Trip Switchgear I	57C-35

LIST OF FIGURES (cont.)

Figure No.	Title	Page
57C-25	1243 AF 02 Reactor Trip Switchgear II	57C-36
57C-26	1250 AF 01 Nonradioactive Ventilation System	57C-37
57C-27	2000 AF 01 Turbine Building Floor	57C-38
57C-28	2003 AF 01 Auxiliary Boiler Equipment Room	57C-39
57C-29	2009 AF 02 Elevator Machine Room	57C-40
57C-30	2033 AF 02 Motor-Driven Fire Pump Room	57C-41
57C-31	2040 AF 01 Clean and Dirty Lube Oil Storage	57C-42
57C-32	2043 AF 01 Chemical Laboratory	57C-43
57C-33	2050 AF 01 Lube Oil Conditioner Room	57C-44
57C-34	2052 AF 01 Southwest 6.9KV Switchgear Room	57C-45
57C-35	2053 AF 01 Electrical Equipment Room	57C-46
57C-36	2053 AF 02 Northwest 6.9KV Switchgear Room	57C-47
57C-37	4003 AF 01 Demineralized Water Deoxygenating Room/ Air Handling Equipment Rooms	57C-48
57C-38	4031 AF 01 Battery Room and Battery Charger Room 1	57C-49
57C-39	4031 AF 02 Battery Room and Battery Charger Room 2/ Computer Room B/Shift Turnover Room	57C-50
57C-40	4031 AF 05 Corridor/Spare Battery Room/Spare Room/ Spare Battery Charger Room	57C-51
57C-41	4031 AF 06 Central Alarm Station/Security Room 1	57C-52
57C-42	4032 AF 01 Decontamination Room, Non-Radiological and Radiological Controlled Area Entry/Exit Area	57C-53
57C-43	4032 AF 02 Containment Access Corridor Elevation 107′ 2″	57C-54
57C-44	4033 AF 01 Hot Machine Shop	57C-55
57C-45	4034 AF 01 General Offices	57C-56
57C-46	4041 AF 01 Conference Rooms/Computer Room A/Corridor	57C-57
57C-47	4041 AF 02 Corridor/Restroom	57C-58
57C-48	4042 AF 01 Non-Class 1E Switchgear #1	57C-59
57C-49	4042 AF 02 Non-Class 1E Switchgear #2	57C-60
57C-50	4052 AF 01 Staging and Storage Area/Containment Air Filtration Exhaust Rooms A & B	57C-61
57C-51	5031 AF 01 Radwaste Building	57C-62
57C-52	6030 AF 01 Diesel Generator Room A	57C-63
57C-53	6030 AF 02 Diesel Generator Room B	57C-64
57C-54	6030 AF 03 Fuel Oil Day Tank Room A	57C-65
57C-55	6030 AF 04 Fuel Oil Day Take Room B	57C-66
57C-56	1100 AF 11204 Reactor Coolant Drain Tank Room	57C-67
57C-57	1100 AF 11206 Accumulator Room A	57C-68
57C-58	1100 AF 11207 Accumulator Room B	57C-69
57C-59	1100 AF 11208 RNS Valve Room	57C-70
57C-60	1100 AF 11300A Maintenance Floor (SE Quadrant Access)	57C-71
57C-61	1100 AF 11300B Maintenance Floor (NNE Quadrant) and RCDT Access	57C-72
57C-62	1100 AF 11301 SG Compartment 1	57C-73

LIST OF FIGURES (cont.)

Figure No.	Title	Page
57C-63	1100 AF 11302 SG Compartment 2	57C-74
57C-64	1100 AF 11303 Pressurizer Compartment	57C-75
57C-65	1100 AF 11303A ADS Lower Valve Area	57C-76
57C-66	1100 AF 11303B ADS Upper Valve Area	57C-77
57C-67	1100 AF 11500 Operating Deck	57C-78
57C-68	1200 AF 12341 Middle Annulus	57C-79
57C-69	1200 AF 12555 Main Control Room Emergency Habitability System Air Storage/Operating Deck Staging Area	57C-80
59-1	Contribution of Initiating Events to Core Damage	59-99
59-2	24-Hour Site Boundary Dose Cumulative Frequency Distribution	59-100

REVISION 1 CHANGE ROADMAP

Section	Page No.	Type of Change[1]
AP1000 Document Cover Sheet		Editorial
Probabilistic Risk Assessment, Title Page		Editorial
T of C	i through c	Editorial
Revision 1 Change Roadmap	ci through civ	Editorial
1	1-6	Editorial
3	3-4	Editorial
4B	4B-24	720 027
4B	4B-74	Editorial
6	6-9	720.025 (720.029)
6	6-12	720.025 (720.029) Editorial
6	6-16	Editorial
6	6-17	720.026
6	6-19 through 6-53	720.023 (720.024) (720.097)
6	6-62	720.031
6	6-69	720.025 (720.029)
6	6-71	720.025 (720.029)
8	8-23 and 8-25	Editorial
12	12-6	720.033
12	12-30	720.033
26	26-11 and 26-12	Editorial
28	28-10 and 28-11	Editorial
29	29-17	720.033
29	29-21	720.033

REVISION 1 CHANGE ROADMAP (Cont.)

Section	Page No.	Type of Change[1]
30	30-35 and 30-36	720.068
30	30-66 and 30-67	720.068
30	30-110	Editorial
34	34-1	720.042
34	34-4 and 34-5	720.042
34	34-6 and 34-7	720.042 Editorial
34	34-8 through 34-243	720.042
35	35-28	720.043
39	39-4	720.073 Editorial
39	39-5	720.088 (720.048, 720.074, 720.083, 720.089)
39	39-6	720.088 720.073 (720.048, 720.074, 720.083, and 720.089)
39	39-12	Editorial
39	39-19	Editorial
39	39-20	720.073
39	39-21	Editorial 720.088
39A	39A-1 through 39A-40	720.088 (720.048, 720.074, 720.083, and 720.089)
41	41-6	720.042
41	41-15	720.093
41	41-20	720.054
41	41-31	Editorial
41A	41A-1 through 41A-228	720.042
41B	41B-1 through 41B-11	720.093
43	43-126 and 43-127	Editorial
43C	43C-1 and 43C-2	720.043
44	44-7	Editorial

REVISION 1 CHANGE ROADMAP (Cont.)

Section	Page No.	Type of Change[1]
45	45-1 through 45-3	470.013 (470.012)
45	45-4	470.013 (470.012) Editorial
45	45-5 through 45-48	470.013 (470.012)
49	49-1	720.056
49	49-4 through 49-6	720.056
49	49-9 through 49-49	720.056
50	50-14	720.034
57	57-1 through 57-109	Letter DCP/NRC1515
57A	57A-1 through 57A-37	Letter DCP/NRC1515
57B	57B-1 through 57B-6	Letter DCP/NRC1515
57C	57C-1 through 57C-80	Letter DCP/NRC1515
57D	57D-1 through 57D-7	Letter DCP/NRC1515
59	59-20 and 59-21	Editorial
59	59-23 through 59-25	Letter DCP/NRC1515
59	59-26	720.056
59	59-28	Editorial
59	59-29 through 59-32	720.038
59	59-34 through 59-38	720.038
59	59-72	Editorial
59	59-73	Technical
59	59-83	Editorial
59	59-75 through 59-96	720.038
59	59-97	720.038 720.066
59	59-98	720.038
59	59-100	Technical
Appendix A	A-1 through A-166	720.007 720.010 720.011 720.012 720.013 720.015 720.016

REVISION 1 CHANGE ROADMAP (Cont.)

Section	Page No.	Type of Change[1]
Appendix B	B-6	720.058
Appendix B	B-13	720.076
Appendix D	D-14 and D-15	720 078
Appendix D	D-31	720.078
Appendix D	D-35 and D-36	Technical
Appendix D	D-37 through D-58	720.078

1. Changes incorporated as a result of Westinghouse responses to NRC Request for Additional Information (RAI) identified by RAI number. RAI number in parenthesis contains a reference to RAI response listed above.