CHAPTER 6

SUCCESS CRITERIA ANALYSIS

6.1 Introduction

The event tree models for internal initiating events at power are discussed in Chapter 4. For each event tree, a discussion of the anticipated accident progression is provided in Chapter 4, which also defines the top event nodes in terms of system or operator responses to the initiating event, or some phenomena or consequential failure. In this chapter, criteria are established for determining the ability of the plant to reach a stable shutdown condition following each of the evaluated accident sequences.

This chapter provides the sequence success criteria and their bases for each success sequence, and also the individual top event success criteria for the event tree top events for internal initiating events at power.

Section 6.2 discusses the bases for the PRA success criteria. A discussion of success criteria regarding event sequences and timing, and sequence success involving passive/active system interactions, is presented in Section 6.3.

Section 6.4 uses three tables to list the event tree top events success criteria (Table 6-1), the success criteria for the mitigating systems (Table 6-2) and the success criteria for operator actions (Table 6-3). These tables include references for the justification for the success criteria. The summary table provides the information used by the systems analysts and the human reliability analysts to develop models to calculate the event trees top events failure probabilities, and if applicable, identify the system failure modes (fault tree cutsets).

Note that information regarding support systems is given in Chapter 5. The support systems do not appear as distinct event tree top events, and are not discussed in this chapter.

6.2 Acceptance Criteria and Critical Functions for Success Criteria

Acceptance criteria are the limits established for specific parameters based on known or generally established physical or design limits. Success criteria establish the minimum number or combinations of systems required to operate, during a specified period of time, to ensure that the critical safety functions are met within the limits of the acceptance criteria.

Meeting the success and acceptance criteria ensures that the following critical safety functions are met:

- Decay heat removal (core cooling)
- RCS inventory control
- RCS pressure control
- Containment heat removal and containment isolation
- Reactivity control

The acceptance criteria are stated in the following paragraphs, which also provide the bases for their implementation.

Decay Heat Removal (Core Cooling) and RCS Inventory Control

Adequacy of core cooling is established by requiring that either the core remains covered with water or the peak clad temperature (PCT) of the fuel is less than 2200°F at all times during an event (consistent with Reference 6-1).

RCS Pressure Control

Adequacy of pressure control is established by requiring that the peak RCS pressure does not exceed the pressure limit corresponding to the service limit stress of the ASME Boiler and Pressure Vessel Code for Level C ("emergency condition") events (Reference 6-2). As applied to the RCS as a system, this limit denotes the pressure limit for the lowest-rated RCS component. Per Reference 6-3, the appropriate pressure limit for Westinghouse PWRs is 3200 psig. That limit corresponded to RCS components other than the reactor vessel (i.e., the reactor vessel limit was substantially higher than 3200 psig). This is judged to be the case for the AP1000 design as well (i.e., the vessel will not be limiting). Therefore, the 3200 psig pressure limit is judged to be applicable.

Containment Heat Removal and Containment Isolation

Adequacy of containment heat removal is established by requiring that the peak containment pressure remain below the ultimate containment pressure. This is done by passive containment heat removal, without the need for the passive containment heat removal water system (PCS). Containment isolation is not necessary if sufficient water is retained in the containment for an extended period of time due to operation of passive containment heat removal.

Reactivity Control

The reactivity control requirement is that subcriticality be rapidly achieved and subsequently maintained. Methods of accomplishing this are event-specific, but generally include one or more of the following: reactor trip with insertion of most of the rod cluster control assemblies (for all events except large LOCA and spurious automatic depressurization system (ADS)); termination of any ongoing excessive cooldown or boron dilution, and/or addition of additional boron (for excessive cooldown, e.g., steamline break, or boron dilution events); existence of sufficient voiding in the core coolant to cause initial shutdown, with subsequent addition of boron (for large LOCAs).

Core damage is assumed if any of the following occurs:

- Core cooling acceptance criteria are not met.
- RCS pressure control acceptance criteria are not met.
- Reactivity control cannot be achieved.

Table 4-1 presented a summary of the various systems that provide the mitigating functions necessary to meet the acceptance criteria for AP1000.

6.3 Event Sequences and Timing, Passive/Active System Interactions

A general discussion of the various categories of initiating events and the associated success criteria is provided in Chapter 4. Additional details for key criteria are provided in the following paragraphs. These criteria have been defined based in large part on analyses documented in Chapter 15 of the *AP1000 Design Control Document* (DCD) and in Appendix A of this PRA report. Note that the Appendix A analyses examine bounding scenarios for a given category of events (for example, combinations of limiting break size and location for each LOCA category) and assign the resulting limiting success criteria to the entire event category. Thus, hardware requirements, times available for operator actions, and so forth do not represent best estimate success criteria, but are instead generally pessimistic as to the impact of the mitigation function on the potential consequences to the plant.

6.3.1 General Sequence Success Criteria

Chapter 4 provides a discussion of systems and operator action success needed for each success path for each of the modeled initiating events. Table 6-2 provides a summary of the various means of successfully achieving each critical safety function for each success path of each category of event defined in Chapter 4. More detailed discussions of the specific success criteria, bases, and assumptions are provided below.

Each core damage event tree is modeled through a time frame of 24 hours. This time frame is selected to be consistent with the commonly accepted PRA practices: it is postulated that in such a time frame, an event sequence will reach steady state, stable conditions which will change only very slowly at the end of that time frame. Further, there exists the possibility of numerous and diverse recovery actions (which are not credited in the accident sequences) that can be undertaken in such a time frame to further mitigate the event. Another aspect of this time frame is that it is sufficiently long to allow for the actuation of all expected mitigation functions/systems needed to avoid core damage.

In general, if the reactor achieves a stable shutdown condition without core damage, and this condition can be maintained for at least 24 hours following event initiation without further action or system operation, the sequence is categorized as successful. It is not sufficient to avoid core damage during the first 24 hours if conditions have not stabilized and core damage is anticipated shortly following 24 hours. That is, core damage is assumed if the RCS conditions are not stabilized in 24 hours, or if core damage is anticipated following 24 hours without further system or operator action. Reference 6-1 provides additional rationale for the 24-hour mission time.

6.3.1.1 Loss of Coolant Size Definitions

Chapter 15 of the AP1000 DCD provides conservative analyses of limiting losses of coolant cases, defined as either a large break (break size greater than 1 square foot) or a small break (break size less than 1 square foot). Because system and operator response to a loss of coolant may vary within those break size ranges, the PRA includes specific evaluations of additional

break sizes. The selected break sizes are as follows, based on the break size analysis presented in Appendix A.

Large Break LOCA (LLOCA)

This LOCA is defined as a break sufficiently large such that injection from both accumulators is required. Operation of ADS valves is not required in order to depressurize the RCS to the normal residual heat removal system (RNS) injection pressure. Operation of ADS valves is required in order to depressurize the RCS to allow gravity injection from the in-containment refueling water storage tank (IRWST) and containment recirculation.

The corresponding break size is a break with an equivalent inside diameter of approximately 9 in. or larger.

Spurious ADS LOCA (SPADS)

The opening of all four ADS 4 paths bound this LOCA. Although this LOCA size is within the LLOCA size, it only requires one accumulator because of the less severe plant response to the HL LOCA location. Otherwise the mitigating system requirements are the same as for a LLOCA.

Medium Break LOCA (MLOCA)

This LOCA is defined as a break which is not sufficiently large to require injection from both accumulators, but which is large enough to depressurize the RCS to the pressure at which the pressure interlock for ADS 4 is satisfied and automatic actuation of ADS stage 4 valves does not require the operation of the PRHR or ADS stages 2 or 3.

The lower bound break size corresponding to this definition is approximately 2 in. inside equivalent diameter. Operation of some ADS 2,3,4 valves are required for MLOCA in order to depressurize the RCS to the RNS injection pressure.

On the basis of piping size, the range for this category includes direct vessel injection line breaks and core makeup tank line breaks. However, because the mitigating systems response for these break categories is different than for a medium LOCA, they are evaluated using separate event trees.

Small Break LOCA (SLOCA)

This is defined as a break which is not sufficiently large to allow automatic actuation of ADS stage 4 valves without the operation of PRHR or ADS stages 2 or 3, but which is larger than that for which the chemical and volume control system (CVS) can maintain the water level in the RCS and prevent core uncovery. As with medium LOCA, operation of some ADS valves are required for SLOCA in order to depressurize the RCS to the RNS injection pressure.

The lower bound break size corresponding to this definition is 3/8 in. equivalent inside diameter, which corresponds to a break flow rate of approximately 100 gpm, or the normal makeup capacity of one CVS pump.

RCS Leak

This is defined as primary coolant leakage no greater than that which can be made up by a chemical and volume control system makeup pump in order to maintain the water level in the RCS and prevent core uncovery. Therefore, RCS leaks are defined to be those with flow rates less than that corresponding to the capacity of one CVS pump, or approximately 100 GPM.

6.3.1.2 Reactivity Control Requirements

General requirements for reactivity control were stated in Section 6.2. Table 6-2 provides criteria for specific event sequences.

Most events require the insertion of the rod cluster control assemblies (RCCAs) into the core to ensure shutdown. Subcriticality is achieved even if more than four RCCAs fail to insert, since sufficient negative reactivity would be inserted by the remaining RCCAs to cause subcriticality, allowing maintenance of hot standby conditions for a relatively long time (i.e., in the range of 24 hours). Depending on core conditions at the time of the event, long-term RCS boration may also be required to ensure continued subcriticality.

For steamline break, since the limiting cases as presented in the AP1000 DCD, Chapter 15 involve a severe cooldown with the resultant possibility of return to power following reactor trip, the reactivity control requirements for the PRA include RCS boration. This requirement is conservative, since a return to power occurs only for a specific (i.e., low frequency) set of conditions, and since the resulting power level is low (approximately 3 percent or less as reported in the DCD). The dynamic interaction of core heatup, resulting negative reactivity feedback, and PRHR operation would be expected to result in a stable condition in which heat generated in the core is removed.

For large LOCAs, the large amount of voiding in the core, accompanied by the rapid boration from accumulators, CMTs, and the IRWST, provides sufficient shutdown such that reactor trip is not required.

ATWS Reactivity Considerations

Sequences with failure of reactor trip are evaluated in the anticipated transients without scram (ATWS) event trees, where system and operator responses to a reactor trip signal are considered in detail. During an ATWS, the reactor power is inherently self-limited by the total integrated reactivity feedback properties of the core, including moderator temperature coefficient of reactivity. Consideration is given in the models for operation of the diverse actuation system (DAS), as well as the ability of the operators to intervene promptly if the reactor has not automatically tripped when required.

Post ATWS Reactor Shutdown

Failure of the reactor trip function could result from several causes: the reactor trip signal from the protection and monitoring system (PMS) could fail; the reactor trip breakers could fail to open; or, theoretically, the RCCAs could fail to fall into the core after power to the gripper coils is removed. For AP1000, if the reactor trip function fails, the DAS would

provide a backup method for tripping the reactor. Failure of DAS reactor trip could result from failure of the DAS signal, or failure of the RCCA motor-generator (MG) sets to trip.

Although the concept of control rods mechanically failing to insert into the core after the power to the gripper coils is removed has historically been of interest, this failure mechanism is not included in the AP1000 event trees. Past ATWS analyses have assumed, consistent with design basis accident analysis assumptions, that all but one RCCA must be inserted to ensure core subcriticality, so that mechanical failure would require failure of two or more RCCAs to insert. Reference 6-3 presented a calculation for this failure probability, extrapolated from zero such failures in an estimated number of demands thought to be valid at the time of that study, and dismissing common cause mechanical failures as not credible.

Analyses performed in support of the AP600 core design indicate that subcriticality is achieved even if more than four RCCAs fail to insert. Sufficient negative reactivity would be inserted by the remaining RCCAs to cause subcriticality, allowing maintenance of hot standby conditions for a relatively long time (i.e., in the range of 24 hours), although RCS boration would eventually be required for continued long-term subcriticality. Further, at any time in core life the reactor would be expected to achieve a stable condition without exceeding RCS pressure limits, and subsequent RCS boration would result in shutdown.

There is no credible mechanism for mechanical binding of multiple RCCAs once power is removed from the gripper coils (except possibly as a result of a seismic event, which the internal events PRA and models are not intended to address). Further, unless all of the RCCAs were stuck out of the core, there would be sufficient reactivity insertion to avoid an overpressure in excess of the ASME service level C limit (as discussed in the next section), so that additional plant features would be available to mitigate event consequences. Hence, it has been judged to be unnecessary to calculate a probability for more than four RCCAs failing to insert due to some undefined mechanical cause, and such failures are not modeled in the fault trees. Such a failure probability could be based only on expert opinion, and would be expected to be on the order of the probability of vessel failure. This would not be significant relative to other failures modeled in the event sequences.

The possible need for boration if multiple rods were stuck implies that the PRA should consider failure of this function for sequences in which most but not all of the rods inserted. That is, since success of RTPMS implies that there could be multiple RCCAs stuck out of the core, then the success path implies the need for successful boration in the near term. The probability of failing to borate is judged to be insignificant, because of the substantial amount of time (on the order of 24 hours, implying involvement by more than one operations crew) and guidance available for the operators to recognize the need for this function. Further, with most of the RCCAs inserted, there would be no overpressure condition, and no imminent possibility of core damage; a "normal" transient would be in progress, as modeled on the various transient event trees. Thus, it has been judged unnecessary to specifically model RCS boration on the RTPMS success path of the ATWS event trees.

Given the above considerations, the probability of failing to shut down the reactor as a result of mechanical failures of RCCAs to insert is sufficiently low as to eliminate the need for explicit modeling of a "Reactor Trip - Mechanical" event, and this is not included in the ATWS event trees.

Zero UET

The AP1000 employs a low-boron core. One of the benefits of such a core design is that the total integrated reactivity feedback properties of the core, including moderator temperature coefficient of reactivity throughout the full are more negative than in conventional cores. As a result, plant analysis (refer to Appendix A) has shown that the AP1000 has a zero UET for equilibrium core cycles. For about 40 percent of the first core cycle, the allowable maximum RCS pressure may be exceeded. As a bounding assumption, this would only result in a UET of 1.5 percent, assuming a plant life of 40 years.

However, the ATWS T/H analysis has two significant conservatisms. One is that the reactivity feedback during an ATWS transient as the reactor temperature increases is underestimated. The other is that the steam generator heat transfer remains very high until the steam generator dries out and then it suddenly drops to zero. Studies done for other plants have indicated that more realistic modeling of these two effects would significantly reduce the peak RCS pressure such that ATWS would be acceptable during most if not all of the first core cycle and the AP1000 UET would be essentially zero.

6.3.1.3 Reactor Coolant System Overpressure Control Requirements

The general requirement for overpressure control was stated in subsection 6.2. Table 6-2 provides criteria for specific event sequences.

There are three general levels of overpressure control (in addition to reactor trip). These are secondary side heat removal (via main or startup feedwater), passive residual heat removal, and pressurizer safety valves. The first two act to remove heat from the reactor coolant, thereby limiting peak RCS pressure. The safety valves open to relieve reactor coolant to the containment if pressure reaches the RCS design pressure; this is not expected to occur during design basis events. While the automatic depressurization system might provide an additional means of pressure relief for some events, its primary purpose is emergency depressurization rather than overpressure protection.

If the reactor has not tripped following an initiating event, the adequacy of pressure relief capacity is a function of the number of pressurizer safety valves available. The use of a low-boron core in the AP1000 provides favorable core negative reactivity feedback throughout the whole core cycle.

6.3.1.4 Reactor Core Cooling and Inventory Control Requirements

General requirements for core cooling were stated in subsection 6.2. For sequences evaluated using specific T&H analysis to support the PRA, criteria more restrictive than those stated in subsection 6.2 have been used in assigning core damage, consistent with available guidance and engineering judgement specific to the resulting plant conditions. These criteria are identified in Appendix A, as appropriate. The following discussion is based on information presented in Reference 6-5.

For transients, core decay heat removal is provided by steam generator cooling, or, if this is not available, by PRHR heat exchanger cooling (rejecting heat to the IRWST and, eventually, to containment). RCS makeup is not required.

If both of these cooling mechanisms fail, RCS "feed-and-bleed" cooling is available. The RCS would heatup and relieve mass and energy to the containment through the pressurizer safety valves after the steam generator secondary mass was boiled off. The discharge of RCS fluid through the pressurizer safety valves would actuate core makeup tank injection to provide makeup. As the CMT level drops, the automatic depressurization system would be actuated and would make available other supplies of RCS makeup water. These other supplies of RCS makeup include accumulators, the normal residual heat removal system, and the IRWST injected by gravity.

For loss-of-coolant accidents and other events, some degree of RCS depressurization is provided by the break flow. For small LOCAs, CMT or accumulator injection provide adequate initial inventory control and core cooling. PRHR and/or ADS operation allow continued cooling and depressurization, to the pressures at which the RNS or gravity injection systems can operate to maintain cooling.

For medium LOCAs, neither ADS stage 1, 2, 3 nor PRHR operation is required to depressurize the RCS to allow automatic ADS 4 actuation. Either partial ADS operation and RNS injection, or full ADS operation and gravity injection of the IRWST, provide adequate core cooling.

For a large LOCA, CMT injection is not sufficiently rapid to prevent core damage, so that injection from both accumulators is required. In order to accommodate the most limiting failures, including containment isolation failure, the success criteria for large LOCAs require successful automatic ADS and IRWST injection actuation, which also requires successful automatic CMT actuation.

For events other than large LOCAs, successful CMT injection is assumed to require trip of all four reactor coolant pumps in order to allow proper CMT operation. The RCPs receive a trip signal on CMT actuation. For large LOCAs, the depressurization due to the break is judged to be sufficient to make trip of the RCPs unnecessary for successful CMT injection. For other events, if RCP trip does not occur, but the ADS valves are manually actuated, the CMTs will eventually inject, allowing for automatic actuation of the IRWST gravity injection line squib valves.

Table 6-2 provides criteria for specific event sequences.

6.3.1.5 Containment Isolation

Analyses (documented in Appendix A) were conducted to show that sufficient water for long-term recirculation cooling of the core will be retained in containment even if containment isolation is unsuccessful. Therefore, sequences in which core damage has been avoided with successful IRWST injection and recirculation represent success (i.e., no core damage) regardless of the status of containment integrity or PCS water.

In addition, failure of PCS, with successful containment isolation, may result in exceeding the containment design pressure, but does not result in exceeding the containment ultimate pressure (refer to PRA Chapter 40).

For success paths that result in steam release to the containment, the success of containment cooling (PCS or RNS) is modeled. If containment cooling is successful, then the path ends in an OK state. If PCS water cooling is not successful, then the path goes to a special OK end state to allow containment integrity sensitivity studies to be made.

In addition, for success paths that involve passive containment recirculation, the success of containment isolation is modeled. If containment isolation fails, then more recirculation flow paths are required for successful core cooling.

Containment isolation is addressed in the containment event trees for core damage sequences in which IRWST injection fails, in order to determine long-term water availability in the reactor cavity. Success criteria for containment systems are provided in Chapter 43.

6.3.2 Timing of Events and Key Operator Actions

Specific criteria for timing of important events within the various accident sequences are discussed in the following paragraphs.

6.3.2.1 Time to Respond to Loss of Decay Heat Removal

For events involving a loss of main and startup feedwater to the steam generators, the PRHR system would be expected to remove decay heat. If PRHR failed to automatically actuate, the operators would be expected to manually actuate this function. If this were unsuccessful, the operators could initiate RCS depressurization using the ADS, in order to actuate core makeup tank or accumulator injection (i.e., feed and bleed).

The limiting loss of decay heat removal events are those that result in a loss of secondary side heat sink. A loss of main feedwater without startup feedwater (resulting from either station blackout or failure of startup feedwater (SFW)) is analyzed, since this results in the minimum secondary side inventory at the time of reactor trip. Of interest is the time at which steam generator heat transfer is significantly degraded.

Given a loss of main feedwater, with a subsequent failure of startup feedwater, the maximum time available for manual PRHR actuation is the time between generation of the PRHR actuation signal (assumed to occur on low steam generator wide range level), and the time that steam generator dryout occurs. This is determined to be greater than 45 minutes. The Human Reliability Analysis (HRA) as documented in Chapter 30, assumes only a 30-minute time window for this action.

Once dryout occurs, following a loss of main feedwater with a subsequent failure of startup feedwater and PRHR, the operators must initiate depressurization via the ADS in about 30 minutes.

6.3.2.2 Long-Term Decay Heat Removal Using Startup Feedwater

One startup feedwater pump providing flow from the condensate storage tank to one steam generator is sufficient to remove core decay heat following a reactor trip without actuation of additional RCS pressure or inventory control mechanisms (based on engineering calculations). The condensate storage tank is sized to provide sufficient inventory to allow startup feedwater system operation for at least 24 hours (tank sizing design calculations). This assumes atmospheric steam dump operation via the secondary side relief and/or safety valves i.e., no credit for makeup to the deaerator storage tank. Longer term operation is possible if the condenser is available to provide deaerator storage tank makeup, or via replenishment of condensate storage tank inventory.

Condensate storage tank replenishment is not modeled in the Level 1 PRA. For most events modeled in the PRA, successful startup feedwater operation implies successful mitigation of the transient. Although this is not a requirement, the operators would be expected to either return the plant to power operation or continue to cooldown to safe shutdown conditions within several hours of the initiating event.

6.3.2.3 Long-Term Decay Heat Removal Using PRHR

The PRHR subsystem is designed to automatically operate to remove core decay heat if the startup feedwater system does not operate. Following reactor trip, the PRHR heat exchanger rejects heat to the IRWST. After about two hours, the IRWST begins to steam to the containment, where the steam is condensed and the condensate returned to the IRWST through the gutter system. In this mode, the IRWST inventory will last for at least 72 hours.

If the gutter drain valves fail to actuate, the condensate would not be returned to the IRWST. In this case, the operators would be required to actuate the ADS in the 24 – 72 hour time frame. As a result, successful gutter valve operation is assumed to be required for successful PRHR operation.

For transients, successful PRHR operation allows the plant to be maintained in a safe condition for an extended period without further action, assuming IRWST condensate return, and implies successful mitigation of the event. The operators are expected to recover main or startup feedwater and either return the plant to power operation or continue to cool down to safe shutdown conditions within several hours of the initiating event.

6.3.2.4 Long-Term Decay Heat Removal With Depressurization

For events in which the reactor coolant system has been depressurized, there are several ways to achieve decay heat removal. Short-term core cooling, following failure of the normal decay heat removal mechanisms (i.e., main/startup feedwater and PRHR, depending on the initiating event), requires bleed and feed cooling, whereby energy is released from the RCS as steam through the pressurizer safety valves or the ADS valves, and inventory is supplied from the core makeup tanks and/or the accumulators. As the depressurization continues, either the RNS system is used to provide makeup from the cask loading pit, or gravity

injection from the IRWST initiates once RCS pressure is sufficiently low. In the longer term, the following possibilities exist.

- If both RNS pumps operate, then sufficient inventory is injected to prevent the CMT level from dropping to the low-2 setpoint so that fourth stage ADS actuation and IRWST gravity injection actuations are prevented (Reference 6-5). RNS operation continues to provide makeup as necessary, with decay heat removal via the steaming from the ADS stage 1, 2, and 3 valves to the IRWST, and condensing and return of water to the IRWST as described above. Per Reference 6-5, in the long term, the IRWST drains down and the water level in the containment rises until water recirculates through the sump screen into the IRWST injection line and to the RNS pumps. This mode of core cooling can continue indefinitely without the need for additional systems or operator actions. There are two sets of flowpaths for recirculation. Each set of lines consists of a line with one check valve and one squib valve in series and another line with one normally open motor-operated valve and one squib valve in series; the squib valves receive a signal to open on low IRWST level. With two RNS pumps running, engineering design calculations show that two of the four lines are required to be open in order to provide a sufficient suction path for the pumps (based on design calculations). The operators would be expected to initiate opening of the valves, or throttling of the RNS pump discharge valves to limit suction flow requirements, if the automatic opening signal failed or there was a valve failure.

- If only one RNS pump operates, the fourth stage ADS valve may open. In this situation, the one RNS pump can provide adequate injection and containment recirculation. With one RNS pump operating, only one of the four recirculation paths need open.

- If neither RNS pump operates, or if the operators fail to align the RNS system in time, RCS depressurization would continue, and actuation of the fourth stage ADS valves and the IRWST gravity injection lines (on low-low CMT level) would allow the IRWST to inject into the RCS. In this situation, with no RNS pumps running, Appendix A analysis show that any two of the four recirculation lines provide a sufficient natural recirculation flow path.

The PRA event trees do not explicitly model the case of two RNS pumps operating to prevent ADS Stage 4 actuation. In the models, RNS success is defined as one of two RNS pumps supplying IRWST water to the RCS. The RNS cases include a requirement for successful recirculation, which is defined as the opening of valves in one of the four recirculation lines if only one RNS pump is running, or opening the valves in two of these recirculation lines (or, alternatively, action by the operator to throttle the flow from the RNS pumps) if both pumps are running. Therefore, the RNS model accounts for the possibility that both pumps will be operating, but does not require that this prevents fourth stage depressurization.

Notes 10 and 11 of Table 6-2 provide additional details of these requirements.

The minimum time available for this action to actuate the recirculation path squib valves for RNS injection would be the time from generation of a low-3 IRWST water level signal until the IRWST empties, assuming no stage 1, 2, and 3 ADS valves relieving to the IRWST, two RNS pumps in operation, and condensate not being returned to the IRWST. However, the

operators would also have received a low-low level alarm much earlier, and would be anticipating the need to verify operation of the recirculation line squib valves; and condensate return to the IRWST is expected. The HRA assumes a time window of 60 minutes from the low-low level alarm for this action (Chapter 30), with an actual time requirement of 10 minutes. Given the relatively short actual time requirement, the available time window is judged to be sufficiently long to justify the application of recovery in the HRA calculations for this action.

6.3.2.5 Time to Actuate Core Makeup Tanks and Depressurize RCS

The core makeup tanks are expected to automatically actuate and inject following a LOCA, or following a transient with loss of decay heat removal and subsequent relief through the pressurizer safety valves. As the CMTs inject and their level drops, the ADS is automatically actuated to depressurize the RCS to allow for accumulator injection (self actuated) and RNS operation (manually actuated) or gravity injection from the IRWST (automatically actuated)

If the CMTs fail to actuate automatically, the operator can manually actuate them. If this fails, the operator is directed to manually initiate RCS depressurization with the ADS and initiate RNS injection. Actuation of the ADS also opens the IRWST injection squib valves. Thus, if RNS subsequently fails, depressurization will continue to the point at which gravity injection from the IRWST will occur; in this case the operator would be required to actuate the IRWST squib valves as well.

Large LOCA

For a large LOCA in the PRA, the RCS depressurizes rapidly and the accumulators empty in several minutes. As a result, the HRA assumes that there is insufficient time to credit operator action to actuate IRWST injection or ADS valves. Although not required to provide core cooling, CMT injection is required to provide automatic IRWST and ADS actuation signals.

Medium LOCA

The time available for operator action to actuate CMT injection is defined as the time from the occurrence of the first signal that would alert the operators to the fact that CMT actuation should have occurred until the latest time at which CMT injection can begin such that core damage will be prevented without accumulator injection (assuming one train of RNS operates in injection mode after CMT injection). For medium LOCA, no credit is taken for this action if no accumulator is available. The available time is 20 minutes if accumulator injection is successful.

For medium LOCAs, the time available for operator action to depressurize the RCS is defined as the time from event initiation until the time at which the ADS valves must begin to open in order to ensure that gravity injection can occur in time to prevent core damage (given that RNS has failed and the IRWST valves have opened). For cases with successful accumulator injection and PRHR operation, this is determined to be approximately 20 minutes from the time CMT actuation occurs (Appendix A), conservatively evaluated for breaks at the large end of the medium LOCA spectrum. For cases without accumulator injection or PRHR operation, operator action is not modeled in the PRA because of the shorter time available.

If the IRWST injection line valves fail to open automatically, the operators must actuate them in order to allow gravity injection. This action is actually the same action as ADS actuation, since the same manual control initiates both ADS and IRWST valves. As a result, the HRA considers appropriate system dependencies with respect to this action.

The maximum time available for operator action to start RNS injection is defined as the time from event initiation until the time at which one train of RNS injection is required to prevent core damage and prevent initiation of gravity injection (assuming one accumulator has injected). For cases with successful accumulator injection and PRHR operation, this is determined to be 20 minutes (Appendix A), conservatively evaluated for breaks at the large end of the medium LOCA spectrum. For cases without accumulator injection or PRHR operation, operator action is not modeled in the PRA because of the shorter time available.

Small LOCA, Steam Generator Tube Rupture, and Transients

For small LOCAs, steam generator tube rupture with failure to isolate the ruptured steam generator and equalize primary and secondary side pressures, and transients with loss of decay heat removal, the operators manually actuate CMT injection, and RCS depressurization, if the automatic actuations fail. The time available to take these actions is defined as the time from generation of an automatic signal to actuate CMTs until the time at which the ADS valves must begin to open in order to ensure that either RNS operation or gravity injection can occur in time to prevent core damage. Under this assumption, manual RCS depressurization is assumed to occur at the same time as manual CMT actuation. This is determined to be at least 30 minutes (Appendix A) for these types of initiating events.

If the IRWST injection line valves fail to open automatically, the operators must actuate them in order to allow gravity injection. This action is actually the same action as ADS actuation, since the same manual control initiates both ADS and IRWST valves. As a result, the HRA considers appropriate system dependencies with respect to this action.

Actuation of RNS is assumed to be performed in conjunction with actuation of ADS. The maximum time available for operator action to start RNS injection is defined as the time from ADS actuation until the time at which one train of RNS injection is required to prevent core damage and prevent initiation of gravity injection (assuming at least one CMT has injected). This is determined to be approximately 10 minutes (Appendix A, for small LOCA) if PRHR has not actuated. This corresponds to over an hour from event initiation. With PRHR operation, there would be several hours available.

6.3.2.6 Time to Empty IRWST and Switchover to Recirculation After Gravity Injection (RNS Not Operating)

For events where ADS is actuated, IRWST inventory is not sufficient to maintain injection for 24 hours, and switchover to containment sump recirculation for continued decay heat removal is required. Switching to recirculation before 24 hours is modeled in the event trees whenever gravity injection is modeled. Recirculation requires the opening of the valves (i.e., one check valve and one squib valve, or one squib valve) in two of the four recirculation lines. This occurs either automatically on low-low IRWST level, or via operator action. The timing for this action was discussed in subsection 6.3.2.4.

6.3.2.7 Time to Isolate Containment

As indicated in Section 6.2, containment isolation does not affect the systems or equipment required to prevent core damage. However, containment isolation and operation of PCS are in events that result in ADS actuation.

Containment isolation is an automatic function. The operators must verify successful isolation and manually initiate closure of any valves, that do not automatically actuate. For the case of containment isolation prior to core damage for large LOCA, credit may be considered for operator action to actuate containment isolation from the control room if it has not automatically actuated, since the emergency procedures provide such instruction as one of the first several steps for reactor trip or safety injection response, and since the event sequence timing for break sizes of interest indicates that this action could occur in time.

The available time to initiate containment isolation for large LOCA prior to core damage is estimated as being on the order of 10 minutes. It is estimated to be significantly longer for other events.

6.3.2.8 Event-Specific Considerations and Operator Action Times

Steam Generator Tube Rupture

Following a steam generator tube rupture, the operator would take several actions in order to mitigate the event using nonsafety-related active systems to isolate the faulted steam generator and cool down and depressurize the plant. Passive safety-related response does not require operator action. The passive response paths on the SGTR event tree pessimistically model active steam generator isolation, which would not be required, since turbine trip (turbine stop valve closure) would provide an alternative to active steam generator isolation. The event tree models have been simplified for quantification considerations and do not model all possible mitigative options.

- The ruptured steam generator would be identified and isolated. The time available to complete the isolation is estimated as the time required to raise the level in the steam generator from the high end of the normal water level (the maximum level at time of reactor trip) to the top of the steam generator, assuming flow entering from startup feedwater and both ends of a ruptured tube. The DCD, subsection 15.6.3, indicates that it takes well over an hour for the water level in the faulted steam generator to reach the high-2 narrow range level (well below the top of the steam generator). Therefore, the time window for this action is substantially greater than one hour. The HRA, Chapter 30, conservatively credits a time window of only 30 minutes.

- The operator would manually activate steam generator overfill protection if automatic protection fails. If steam generator isolation fails, the automatic steam generator overfill protection is actuated on high-2 steam generator narrow range level to isolate startup feedwater and CVS injection. If this automatic function fails, the operator must manually perform these functions. The time available is estimated as the time to raise the level in the steam generator from the high-2 narrow range setpoint to the top of the steam generator. The DCD, subsection 15.6.3, indicates that the increase in steam generator

level is slow at the time the high-2 level setpoint occurs. The time to reach the top of the steam generator, based on the DCD Chapter 15 results, is estimated to be substantially longer than the 30-minute time window assumed in the HRA, Chapter 30, for this action.

- The operator is instructed to initiate primary system depressurization using CVS auxiliary pressurizer spray, and initiate cooldown using the intact steam generator supplied by startup feedwater. This time is taken to be the same as the time to isolate the ruptured steam generator.

For the AP1000, the design basis steam generator tube rupture is rupture of a single tube. For this event, automatic depressurization system actuation does not occur, as demonstrated in the safety analysis contained in DCD, subsection 15.6.3. In a design basis steam generator tube rupture, the reactor coolant system pressure decreases to the secondary side pressure, which terminates the reactor coolant system leak as a result of automatic passive system operation. The core makeup tanks effectively add makeup to the reactor coolant system without draining the core makeup tank level to the automatic depressurization system actuation setpoint.

Appendix A provides results of the analysis of success criteria for the steam generator tube rupture (SGTR) initiating event. Plant response to a multiple steam generator tube rupture is substantially the same as (or more favorable than) the response to a single steam generator tube rupture. The multiple steam generator tube rupture initiating event frequency is significantly lower than the initiating event frequency for single SGTR. The only feasible mechanism for a multiple steam generator tube rupture initiating event is the result of wear from loose parts. The lack of multiple tube rupture events in the operating plant population to date vs. the occurrence of several single SGTR events provides a measure of confirmation of the relatively lower expected frequency for multiple SGTR. As a result, the PRA models only a single SGTR initiating event in the event trees.

PRHR Tube Rupture

The operator should isolate the PRHR system in order to terminate the event prior to automatic depressurization system actuation. The maximum time available corresponds to the time to drain one CMT from nominal level to the ADS stage 1 actuation level, with flowrate corresponding to flow into the IRWST from both ends of a ruptured PRHR heat exchanger tube. This is a function of whether or not there is injection from the CVS makeup pump. Based on analyses presented in Appendix A, it is estimated that the time available for this action is longer than 30 minutes, even without CMT or CVS injection. The PRSTR event tree pessimistically requires CVS operation for success.

Main steam line break CMT requirements. Injection from one CMT provides sufficient boron addition for shutdown requirements for the most severe MSLB event, and also provides inventory control to compensate for coolant shrinkage due to the cooldown. CMT discharge will not be sufficient to cause ADS actuation (Appendix A).

6.3.3 Passive/Active System Interactions

System interactions have been examined for AP600 in Reference 6-6. The conclusions from this report apply to the AP1000 because of the similarity of the plant and system designs. The

following paragraphs discuss relevant combinations of active and passive system interactions implied by the sequences modeled in the event trees.

6.3.3.1 RCS Depressurization and Cooldown System Interactions and Criteria

During LOCAs and other low probability events, the passive core cooling system provides core decay heat removal by venting the reactor coolant system to containment via the ADS valves and provides safety injection from several different injection and makeup sources. These sources include the IRWST, which is vented to containment.

For events in which the automatic depressurization system valves provide a mitigation function, reactor coolant system decay heat removal is a closed-loop process that involves venting steam through the automatic depressurization system valves and long-term makeup from in-containment refueling water storage tank injection and containment recirculation.

Impact of containment pressure on ADS success criteria. The containment pressure establishes the backpressure on the automatic depressurization system valve discharge flow and provides the overpressure for in-containment refueling water storage tank injection and containment recirculation. For this closed-loop process, higher containment pressure improves the reactor coolant system heat removal process by increasing the automatic depressurization system vent flow steam density. Therefore, lower containment pressure provides a conservative evaluation of passive core cooling system performance.

The fourth stage automatic depressurization system valves transition from choked to nonchoked flow conditions as the reactor coolant system pressure decreases during the depressurization process. Higher containment pressures cause the transition to nonchoked flow conditions to occur sooner, improving automatic depressurization system performance. Therefore, assuming lower containment pressure also provides a conservative evaluation of fourth-stage automatic depressurization system valve mode change performance.

The DCD Chapter 15 safety analyses that confirm passive core cooling system performance (including in-containment refueling water storage tank injection and containment recirculation flows and fourth-stage automatic depressurization system valve sizing) conservatively assume that the containment is at atmospheric pressure.

The analyses used to confirm the fourth-stage automatic depressurization system valve success criteria provide an integrated reactor coolant system and containment response. Therefore, the containment pressurizes to the best-estimate pressure predicted for the analyzed sequence for the automatic depressurization system backpressure and the in-containment refueling water storage tank pressure. The analyses consider the best-estimate change in discharge mode for the fourth-stage automatic depressurization system valves from choked flow to nonchoked flow conditions as the reactor coolant system and containment pressures vary during the depressurization.

In establishing the ADS success criteria, the analyses have been conducted such that the resulting success criteria apply to conditions both with containment isolation successful and with containment isolation failed (the latter being generally more limiting, as discussed

above). Note that the containment recirculation success criteria is dependent on containment isolation; as a result, containment isolation is modeled in the event trees.

Impact of CVS operation on depressurization, gravity injection, and PRHR operation. The status of the chemical and volume control system is not evaluated for events other than steam generator tube rupture, very small LOCA/RCS leak, and steamline breaks. Continuous or intermittent operation of the CVS is not expected to adversely affect depressurization or gravity injection because CVS injection flow is much smaller than that from the CMTs or accumulators. In addition, CVS operation can only have a secondary impact on RCS pressure during depressurization because opening of the ADS valves provides large vent holes.

The PRA success criteria analysis sensitivity to numbers of CMTs and accumulators bounds the impact of possible CVS operation.

For steam generator tube rupture, CVS operation is modeled for auxiliary pressurizer spray, but normal CVS operation will not adversely affect event mitigation. Further, for SGTR, ADS operation is not required if CVS operation for sprays is successful, so there are no interactions of concern. Cooldown is accomplished via cooling from the intact steam generator or with PRHR operation.

Potential impacts of CVS operation on PRHR operation were investigated as part of the AP600 testing program. Those tests provide data to confirm analytical methods that support successful core cooling with CVS operation.

6.3.3.2 Passive Residual Heat Removal System Performance and Criteria

Use of PRHR at low RCS pressure. No credit is taken in the loss of RCS inventory event tree models (Chapter 4) for heat removal through the PRHR heat exchanger once RCS pressure drops to the accumulator empty pressure. In those models, once the accumulators empty, heat removal and inventory control occur via CMT or IRWST injection.

6.3.3.3 Decay Heat Removal Systems

As discussed earlier, following a reactor trip, decay heat removal is provided by the startup feedwater system or, if startup feedwater is unavailable, the PRHR system. With PRHR system operation but no startup feedwater, RCS pressure may initially rise, but the opening of the pressurizer safety valves is not expected to occur. If the safety valves were to open, CMTs may be actuated to provide RCS inventory makeup as necessary, but CMT injection is not required to prevent core damage (Appendix A).

If startup feedwater and PRHR both operate, RCS cooldown is more rapid. When the RCS temperature is cooled to below the steam generator secondary side temperature, the SFW heat removal becomes ineffective.

6.3.4 Sequence Success Criteria Summary

The success criteria for each success path in the at-power core damage event trees are summarized in Table 6-2 and the accompanying notes. These constitute the set of conditions defined as being necessary to avoid core damage.

In the table, the sequence success criteria are organized by function e.g., reactivity control, inventory control, and so forth, and, within each function listing, by type of event e.g., transient, small LOCA, and so forth. The success sequence identifiers correspond to those used in Chapter 4, except that, where all success paths for an event type are covered by a single criterion, the notation (all) is used in place of the success sequence number. Additional details regarding the success criteria and bases for each individual event tree top event case are provided in Table 6-1.

It is important to note that, in general, these are not best-estimate success criteria. Criteria have been selected to bound the spectra of conditions identified in Appendix A as being important for the various event categories, in order to avoid quantifying uncertainty bounds for the success criteria.

For example, if the analyses described in Appendix A identified that a set of success criteria for avoiding core damage was sensitive to (more restrictive without) the operation of a particular system, but that particular system was not modeled in the event trees, then that set of success criteria was adjusted to cover the case where that system was not operating. A particular example of this is containment isolation. Containment isolation is modeled on most of the event trees. However, as discussed in Appendix A, the effect of failure to isolate the containment is considered in all success criteria. The success criteria for operation have been defined to cover the more limiting case of containment isolation failure. Another example is passive containment cooling; its impact is also discussed in Appendix A and reflected in the success criteria.

In making adjustments to the sequence success criteria, the ADS criteria have generally been selected as the variables, since ADS incorporates the greatest degree of redundancy (in terms of total number of valves). Criteria for systems for which two full-capacity elements are provided, such as core makeup tanks, accumulators, and so forth, have generally been set as one out of two success, consistent with the design philosophy. Thus, for a sequence for which core damage was predicted with a given set of success criteria, the ADS success criteria were changed until core damage was avoided, with the other criteria held constant.

6.4 Event Tree Top Events Success Criteria

Three tables are provided in this section. They provide:

- Internal event tree top event success criteria and basis (6-1)
- Summary of success criteria for the mitigating systems (6-2)
- Summary of success criteria for operator actions and mission times (6-3)

In this section, the success criteria are described for each event tree top event case, and the bases for the success criteria are presented. For any given system modeled in the event trees,

there are typically several cases. The different cases account for differences in availability of other systems or actuation signals, the availability of time for operator action, and so forth.

The results of this section are summarized in Table 6-1, which provides information on success criteria and bases, credited operator actions, system actuation, and affected event trees for each top event case, in alphabetical order by case name. Table 6-3 provides a summary of time windows for each operator action included in the cases, and also indicates in which cases each action is used.

The detail of events is provided in PRA Chapter 4. The entries in Table 6-1 for "Basis" refer to specific Chapter of DCD and PRA.

The containment event tree success criteria and basis are not included in Table 6-1. These are discussed in PRA Chapter 40.

The shutdown event tree success criteria and basis are not included in Table 6-1 and 6-2. These are discussed in PRA Chapter 54.

6.5 References

6-1 *Advanced Light Water Reactor Utility Requirements Document*, Vol. III, ALWR Passive Plant, Revisions 5 and 6, December 1993.

6-2 "ASME Boiler & Pressure Vessel Code, and American National Standard," ACI Standard 359-83, Section III, Division 1, Subsection NB-3224, July 1980.

6-3 WCAP-11992, "Joint Westinghouse Owners Group/Westinghouse Program: ATWS Rule Administration Process," December 1988.

6-4 "AP1000 Design Control Document (DCD)"

6-5 WCAP-13793, Rev. 1, "AP600 System/Event Matrix," 4/12/94.

6-6 WCAP-14477, "The AP600 Adverse System Interactions Evaluation Report," February 1996.

Table 6-1 (Sheet 1 of 34)

SUMMARY OF EVENT TREE TOP EVENTS SUCCESS CRITERIA
(Internal Initiating Events at Power Cases)

Event Case Name	Top Event Name	Event Trees	Success Criteria	Manual Actions	Dependencies and Modeled Actuations	Mission Time	Basis*
AC1A Accumulators	ACC	SI-LB	2 out of 2 check valves open in 1 out of 1 Accumulator lines for injection into the RCS through the intact injection line	None	None	Demand	A Chap10 A A3.3 D 6.3
AC2AB Accumulators	ACC	TRANS, LRCS, LMFW1, LMFW, POWEX, LCCW, LCOND, LCAS, LOSP, SLB-D, SLB-U, SLB-V, SPADS, MLOCA, CMTLB, SLOCA, RCSLK, PRSTR, SGTRC	2 out of 2 check valves open in 1 out of 2 Accumulator lines for injection into the RCS	None	None	Demand	A Chap10 A A3.3 D 6.3

*Key to BASIS column entries:
D = DCD
A = PRA Report
O = other specific justification
S = not used in base AP1000 PRA, provided for sensitivity studies
Numbers in BASIS column indicate chapter or section number in which details are provided.

Table 6-1 (Sheet 2 of 34)

SUMMARY OF EVENT TREE TOP EVENTS SUCCESS CRITERIA
(Internal Initiating Events at Power Cases)

Event Case Name	Top Event Name	Event Trees	Success Criteria	Manual Actions	Dependencies and Modeled Actuations	Mission Time	Basis
ACBOTH	ACC	LLOCA	2 out of 2 check valves open in both accumulator lines for injection into the RCS	None	None	Demand	D 15.6.5 A Chap10 A A3.4
ADA Full Depressurization PRHR Fails CMT Successful	ADS-F	TRANS, LRCS, LMFW1, LMFW, POWEX, LCCW, LCOND, LCAS, SLB-D, SLB-U, SLB-V, SLOCA, RCSLK, PRSTR, SGTRC	3 out of 4 ADS Stage 4 valves open **AND EITHER** 1 out of 4 ADS Stages 2,3 valves and isolation valves open to depressurize to Stage 4 automatic actuation setpoint **OR** manual PMS or DAS actuation	Credit is given for manual actuation if automatic actuation fails. [Operator Actions: LPM-MAN01, AND-MAN01]	Automatic actuation via PMS (stage 1: low CMT water level plus CMT actuation signal; stages 2,3: stage 1 + delay; stage 4: low-2 CMT level + CMT stage 3 signal + delay + pressure interlock).	24 hours	A Chap11 A A3.2 D 6.3
ADAB Full Depressurization PRHR Fails, CMT Success, Power not recovered after LOOP	ADS-F	LOSP	3 out of 4 ADS Stage 4 valves open **AND EITHER** 1 out of 4 ADS Stages 2,3 valves and isolation valves open to depressurize to Stage 4 automatic actuation setpoint **OR** manual PMS or DAS actuation	Credit given for manual actuation if automatic actuation fails. [Operator Actions: LPM-MAN02, AND-MAN01]	Automatic actuation via PMS (stage 1: low CMT water level plus CMT actuation signal; stages 2,3: stage 1 + delay; stage 4: low-2 CMT level + CMT stage 3 signal + delay + pressure interlock).	24 hours	A Chap11 A A3.2 D 6.3

Table 6-1 (Sheet 3 of 34)

SUMMARY OF EVENT TREE TOP EVENTS SUCCESS CRITERIA
(Internal Initiating Events at Power Cases)

Event Case Name	Top Event Name	Event Trees	Success Criteria	Manual Actions	Dependencies and Modeled Actuations	Mission Time	Basis
ADAL Full Depressurization PRHR Fails, CMT Success, Power Restored Following LOSP with Diesel Generator Operation	ADS-F	LOSP	3 out of 4 ADS Stage 4 valves open **AND EITHER** 1 out of 4 ADS Stages 2, 3 valves and isolation valves open to depressurize to Stage 4 automatic actuation setpoint **OR** manual PMS or DAS actuation	Credit given for manual actuation if automatic actuation fails. [Operator Actions: LPM-MAN02, ADN-MAN01]	Automatic actuation via PMS (stage 1: low CMT water level plus CMT actuation signal; stages 2,3: stage 1 + delay; stage 4: low-2 CMT level + CMT stage 3 signal + delay + pressure interlock).	24 hours	A Chap11 A A3.2 D 6.3
ADB Full Depressurization PRHR Fails, CMT Fails, Power not recovered after LOSP	ADS-F	LOSP	3 out of 4 ADS Stage 4 valves open	Credit given for manual actuation only. [Operator Actions: LPM-MAN02, ADN-MAN01]	None	24 hours	A Chap11 A A3.3 D 6.3
ADL Full Depressurization PRHR fails, CMT Fails, Power Restored Following LOSP	ADS-F	LOSP	3 out of 4 ADS Stage 4 valves open	Credit given for manual actuation only. [Operator Actions: LPM-MAN02, ADN-MAN01]	None	24 hours	A Chap11 A A3 3 D 6.3

Table 6-1 (Sheet 4 of 34)

SUMMARY OF EVENT TREE TOP EVENTS SUCCESS CRITERIA
(Internal Initiating Events at Power Cases)

Event Case Name	Top Event Name	Event Trees	Success Criteria	Manual Actions	Dependencies and Modeled Actuations	Mission Time	Basis
ADM Full Depressurization CMT Successful	ADS-F	MLOCA, CMTLB, SI-LB	3 out of 4 ADS stage 4 valves open	Credit given for manual actuation if automatic actuation fails. [Operator Actions: LPM-MAN02, AND-MAN01]	Automatic actuation via PMS (stage 1: low CMT water level plus CMT actuation signal; stages 2,3: stage 1 + delay; stage 4: low-2 CMT level + CMT stage 3 signal + delay + pressure interlock).	24 hours	A Chap11 A A3.2 D 6.3
ADMA Full Depressurization CMT Successful	ADS-F	LLOCA	3 out of 4 ADS stage 4 valves open	Credit given for automatic actuation only.	Automatic actuation via PMS (stage 1: low CMT water level plus CMT actuation signal, stages 2, 3: stage 1 + delay; stage 4: low-2 CMT level + CMT stage 3 signal + delay + pressure interlock).	24 hours	A Chap11 A A3.4 D 6.3 D 15.6.5
ADQ Full Depressurization CMT Fails	ADS-F	MLOCA, CMTLB, SI-LB	3 out of 4 ADS stage 4 valves open	Credit given for manual actuation only. [Operator Actions: LPM-MAN02, AND-MAN01]	None	24 hours	A Chap11 A A3.3 D 6.3
ADS Full Depressurization PRHR Successful, CMT Successful	ADS-F	SLOCA, RCSLK, PRSTR, SGTRC	3 out of 4 ADS stage 4 valves open	Credit given for manual actuation if automatic actuation fails. [Operator Actions: LPM-MAN01, AND-MAN01]	Automatic actuation via PMS (stage 1: low CMT water level plus CMT actuation signal; stages 2,3: stage 1 + delay; stage 4: low-2 CMT level + CMT stage 3 signal + delay + pressure interlock).	24 hours	A Chap11 A A3.2 D 6.3

Table 6-1 (Sheet 5 of 34)

SUMMARY OF EVENT TREE TOP EVENTS SUCCESS CRITERIA
(Internal Initiating Events at Power Cases)

Event Case Name	Top Event Name	Event Trees	Success Criteria	Manual Actions	Dependencies and Modeled Actuations	Mission Time	Basis
ADT Full Depressurization CMT Fails	ADS-F	TRANS, LRCS, LMFW1, LMFW, POWEX, LCOND, LCCW, LCAS, SLB-D, SLB-U, SLB-V, SLOCA, PRSTR, RCSLK, SGTRC	3 out of 4 ADS Stage 4 valves open	Credit is given for manual actuation only. [Operator Actions: LPM-MAN01, AND-MAN01]	None	24 hours	A Chap11 A A3.3 D 6.3
ADW Full Depressurization for ATWS	ADS-F	ATWS, ATW-S, ATW-T	3 out of 4 ADS Stage 4 valves open	Credit is given for manual actuation only. [Operator Actions: LPM-MAN01, AND-MAN01]	None	24 hours	A Chap11 D 6.3 A A3.1

Table 6-1 (Sheet 6 of 34)

SUMMARY OF EVENT TREE TOP EVENTS SUCCESS CRITERIA
(Internal Initiating Events at Power Cases)

Event Case Name	Top Event Name	Event Trees	Success Criteria	Manual Actions	Dependencies and Modeled Actuations	Mission Time	Basis
AD1 Partial Depressurization PRHR Fails CMT Fails	ADS-P	TRANS, LRCS, LMFW1, LMFW, POWEX, LCOND, LCCW, LCAS, SLB-D, SLB-U, SLB-V, SLOCA, PRSTR, RCSLK, SGTRC	2 out of 4 ADS stages 2,3 valves and isolation valves open **OR** 1 out of 4 ADS stage 4 valves open	Credit is given for manual actuation only. [Operator Actions: LPM-MAN01, AND-MAN01]	None	24 hours	A Chap11 A A3.3 D 6.3
AD1A Partial Depressurization PRHR Fails CMT Successful	ADS-P	TRANS, LRCS, LMFW1, LMFW, POWEX, LCOND, LCCW, LCAS, SLB-D, SLB-U, SLB-V, SLOCA, RCSLK, PRSTR, SGTRC	2 out of 4 ADS stages 2,3 valves and isolation valves open **OR** 1 out of 4 ADS stage 4 valves open	Credit is given for manual actuation if automatic actuation fails. [Operator Actions: LPM-MAN01, AND-MAN01]	Automatic actuation via PMS (stage 1: low CMT water level plus CMT actuation signal; stages 2,3: stage 1 + delay)	24 hours	A Chap11 A A3.2 D 6.3

Table 6-1 (Sheet 7 of 34)

SUMMARY OF EVENT TREE TOP EVENTS SUCCESS CRITERIA
(Internal Initiating Events at Power Cases)

Event Case Name	Top Event Name	Event Trees	Success Criteria	Manual Actions	Dependencies and Modeled Actuations	Mission Time	Basis
ADF 1 stage Depressurization to equalize pressures following SGTR	PRDEP	SGTR	1 out of 2 ADS stage 1 valves and isolation valves open	Credit given for manual actuation only. [Operator Actions: ADF-MAN01]	None	24 hours	A Chap11 A A3.3 D 6.3
ADR Partial Depressurization PRHR Fails, CMT Fails, Power Restored Following LOOP	ADS-P	LOSP	2 out of 4 ADS stages 2,3 valves and isolation valves open **OR** 1 out of 4 ADS stage 4 valves open	Credit given for manual actuation only. [Operator Actions: LPM-MAN02, AND-MAN01]	None	24 hours	A Chap11 A A3.3 D 6.3
ADRA Partial Depressurization PRHR Fails, CMT Success, Power Restored Following LOOP	ADS-P	LOSP	2 out of 4 ADS stages 2,3 valves and isolation valves open **OR** 1 out of 4 ADS stage 4 valves open	Credit given for manual actuation if automatic actuation fails. [Operator Actions: LPM-MAN02, AND-MAN01]	Automatic actuation via PMS (stage 1: low CMT water level plus CMT actuation signal; stages 2,3: stage 1 + delay)	24 hours	A Chap11 A A3 2 D 6.3
ADU Partial Depressurization CMT Successful	ADS-P	MLOCA	2 out of 4 ADS stages 2,3 valves and isolation valves open **OR** 1 out of 4 ADS stage 4 valves open	Credit given for manual actuation if automatic actuation fails. [Operator Actions: LPM-MAN02, AND-MAN01]	Automatic actuation via PMS (stage 1: low CMT water level plus CMT actuation signal; stages 2,3: stage 1 + delay)	24 hours	A Chap11 A A3.2 D 6.3

Table 6-1 (Sheet 8 of 34)

SUMMARY OF EVENT TREE TOP EVENTS SUCCESS CRITERIA
(Internal Initiating Events at Power Cases)

Event Case Name	Top Event Name	Event Trees	Success Criteria	Manual Actions	Dependencies and Modeled Actuations	Mission Time	Basis
ADUM Partial Depressurization PRHR Fails	ADS-P	MLOCA CMTLB	2 out of 4 ADS stages 2, 3 valves and isolation valves open **OR** 1 out of 4 ADS stage 4 valves open	Credit given for manual actuation only. [Operator Actions: LPM-MAN02, AND-MAN01]	None	24 hours	A Chap11 A A3.3 D 6 3
ADV Partial Depressurization PRHR successful, CMT successful	ADS-P	SLOCA, RCSLK, PRSTR, SGTRC	2 out of 4 ADS stages 2,3 valves and isolation valves open **OR** 1 out of 4 ADS stage 4 valves open	Credit given for manual actuation if automatic actuation fails. [Operator Actions: LPM-MAN01, AND-MAN01]	Automatic actuation via PMS (stage 1: low CMT water level plus CMT actuation signal; stages 2,3: stage 1 + delay; stage 4: low-2 CMT level + CMT stage 3 signal + delay + pressure interlock).	24 hours	A Chap11 A A3.2 D 6.3
ADZ Partial Depressurization PRHR successful, CMT Fails	ADS-P	SLOCA, RCSLK, PRSTR, SGTRC, SLB-U, SLB-D, SLB-V	2 out of 4 ADS stages 2,3 valves and isolation valves open **OR** 1 out of 4 ADS stage 4 valves open	Credit is given for manual actuation only. [Operator Actions: LPM-MAN01, AND-MAN01]	None	24 hours	A Chap11 A A3.3 D 6 3
BL Steamline break occurs inside containment	BL	SLB-U	Main steamline break occurs upstream of Main Steam Isolation Valves in portion of the line inside containment	None	None	Not Applicable	A Chap31

Table 6-1 (Sheet 9 of 34)

SUMMARY OF EVENT TREE TOP EVENTS SUCCESS CRITERIA
(Internal Initiating Events at Power Cases)

Event Case Name	Top Event Name	Event Trees	Success Criteria	Manual Actions	Dependencies and Modeled Actuations	Mission Time	Basis
CDS Condensate system provides makeup to deaerator storage tank following reactor trip *(This forms a part of the FWF, FWT, SFWT cases and is not used separately; also see COND)*	MFW, SFW	TRANS, LRCS, LMFW1, LMFW, POWEX, LCCW	1 out of 3 condensate pumps provides flow to the deaerator storage tank **AND** Condensate regulating valves provide automatic flow control	None	Automatic PLS control	24 hours	D 10.4.7 A Chap14 O (1)
CIA Steam Line Isolation following steamline break	MSISO	SLB-D, SLB-U	Main steam isolation valve in each main steam line closed.	Credit given for manual closure of isolation valves if automatic actuation fails [Operator Actions: CIA-MAN01]	Automatic actuation via PMS (low steam line pressure, low-2 SG NR level).	24 hours	D 15.1.5
CIB Manual SG Isolation following SGTR	SGISO	SGTR	One isolation valve in each line connected with the affected steam generator closed **AND** Reclosure of any faulted steam generator PORV or safety valves that initially open when steam lines are isolated (See SLSOV3)	Credit given only for manual closure of isolation valves. [Operator Actions: CIB-MAN00, CIB-MAN01]	None	24 hours	D 15.6.3

O (1) AP600 PRA Report Section 6.4.17

Table 6-1 (Sheet 10 of 34)

SUMMARY OF EVENT TREE TOP EVENTS SUCCESS CRITERIA
(Internal Initiating Events at Power Cases)

Event Case Name	Top Event Name	Event Trees	Success Criteria	Manual Actions	Dependencies and Modeled Actuations	Mission Time	Basis
CIC Containment Isolation prior to core damage	CIS	LLOCA	One isolation valve closed in each containment penetration line (subject to PRA screening criteria) in order to allow fewer containment recirculation paths (see RECIRC, RECIRC1)	Credit for automatic actuation, with manual actuation possible for smaller breaks. [Operator Actions: CIC-MAN01, where applicable]	Automatic Actuation via PMS (SI signal or high containment pressure)	Demand	A Chap24 A A3.5
CM1A Core Makeup Tanks	CMT	CMTLB, SI-LB	1 out of 1 Core Makeup Tank injects (1 out of 2 CMT isolation AOVs open per CMT).	Credit given for manual actuation if automatic actuation fails. [Operator Actions: LPM-MAN02, CMN MAN01]	PMS actuation (low prz pressure or high ctmt pressure S signals), PMS and DAS actuation (low prz water level)	Demand	A Chap9 A A3.2 D 6.3
CM2AB Core Makeup Tanks	CMT	TRANS, LRCS, LMFW1, LMFW, POWEX, LCOND, LCCW, LCAS, ATWS, ATW-S, ATW-T	1 out of 2 Core Makeup Tanks inject (1 out of 2 CMT isolation AOVs open per CMT) **AND** Reactor coolant pumps trip (see RCT)	Credit given for manual actuation if automatic actuation fails. [Operator Actions: LPM-MAN01, CMN MAN01]	PMS actuation (low wide range SG water level coincident with high hot leg temp), PMS and DAS actuation (low prz. level)	24 hours	A Chap9 A A3.2 D 6.3

Table 6-1 (Sheet 11 of 34)

SUMMARY OF EVENT TREE TOP EVENTS SUCCESS CRITERIA
(Internal Initiating Events at Power Cases)

Event Case Name	Top Event Name	Event Trees	Success Criteria	Manual Actions	Dependencies and Modeled Actuations	Mission Time	Basis
CM2LA Core Makeup Tanks	CMT	LLOCA SPADS	1 out of 2 Core Makeup Tanks inject (1 out of 2 CMT isolation AOVs open per CMT) in order to actuate IRWST gravity injection line squib valves on low-low CMT level	None credited.	PMS actuation (low prz pressure or high ctmt pressure S signals), PMS and DAS actuation (low prz water level)	Demand	A, O A Chap9 A A3.4 D 6.3
CM2NL Core Makeup Tanks	CMT	MLOCA	1 out of 2 Core Makeup Tanks inject (1 out of 2 CMT isolation AOVs open per CMT) **AND** Reactor coolant pumps trip (see RCN).	Credit given for manual actuation if automatic actuation fails. [Operator Actions. LPM-MAN02, CMN-MAN01]	PMS actuation (low prz pressure or high ctmt pressure S signals), PMS and DAS actuation (low prz water level)	Demand	A Chap9 A A3.2 D 6.3
CM2P Core Makeup Tank	CMT	LOSP	1 out of 2 Core Makeup Tanks inject (1 out of 2 CMT isolation AOVs open per CMT).	Credit given for manual actuation if automatic actuation fails. [Operator Actions: LPM-MAN02, CMN-MAN01]	PMS actuation (low wide range SG water level coincident with high hot leg temp), PMS and DAS actuation (low prz. level)	24 hours	A Chap9 A A3.2 D 6.3
CM2SL Core Makeup Tank	CMT	SLB-D, SLB-U, SLB-V, SLOCA, RCSLK, PRSTR, SGTRC	1 out of 2 Core Makeup Tanks inject (1 out of 2 CMT isolation AOVs open per CMT) **AND** Reactor coolant pumps trip (see RCL)	Credit given for manual actuation if automatic actuation fails. [Operator Actions: LPM-MAN01, CMN-MAN01]	PMS actuation (low prz pressure S signal), PMS and DAS actuation (low prz water level)	24 hours	A Chap9 A A3.2 D 6.3

Table 6-1 (Sheet 12 of 34)

SUMMARY OF EVENT TREE TOP EVENTS SUCCESS CRITERIA
(Internal Initiating Events at Power Cases)

Event Case Name	Top Event Name	Event Trees	Success Criteria	Manual Actions	Dependencies and Modeled Actuations	Mission Time	Basis
COND Main Condenser and full steam dump following reactor trip *(This forms a part of the FWF, FWT, SFWT cases and is not used separately; also see CDS)*	MFW, SFW	TRANS, LRCS, LMFW1, LMFW, POWEX, LCCW	3 out of 6 steam dump valves open to accommodate post-reactor-trip steam load to condenser and provide source of water for the deaerator storage tank **AND** Condenser available, including operation of 1 out of 2 Circulating Water trains to maintain condenser vacuum.	None	Automatic PLS control of steam dump, feedwater, and circulating water trains	24 hours	A Chap14 D 10.4.4 D 10 4.7
COND1 Main condenser and secondary heat removal via steam dump for SGTR depressurization	SGDEP	SGTR	1 out of 6 steam dump valves open for secondary heat removal **AND** Condenser available, including operation of 1 out of 2 Circulating Water trains to maintain condenser vacuum.	Credit given for manual steam dump valves control. [Operation Actions: CIB-MAN00, DUMP-MAN01]	Automatic PLS control of steam dump, feedwater, and circulating water trains	24 hours	A Chap14 D 10.4.4 D 10.4.7
CSAX CVS Auxiliary Prz Spray	PRDEP	SGTR	1 out of 2 CVS makeup pumps delivers flow to the pressurizer spray header	Credit given only for manual actuation, and for action to align suction to the spent fuel pool when BAT empties. [Operator Actions: CIB-MAN00, CVN-MAN00]	None.	6 hours	A Chap15 D 6.3 D 15 6.3

Table 6-1 (Sheet 13 of 34)

SUMMARY OF EVENT TREE TOP EVENTS SUCCESS CRITERIA
(Internal Initiating Events at Power Cases)

Event Case Name	Top Event Name	Event Trees	Success Criteria	Manual Actions	Dependencies and Modeled Actuations	Mission Time	Basis
CSBOR1 CVS RCS boration following ATWS	BOMAN	ATWS, ATW-T	1 out of 2 CVS makeup pumps delivers contents of boric acid tank to the reactor coolant system.	Credit given only for manual actuation. [Operator Actions: ATW-MAN11, CVN MAN02,]	None	6 hours	A Chap15 D 6.3 O (2)
CVS1 CVS RCS makeup	CVCS	PRSTR, SGTR RCSLK	1 out of 2 CVS makeup pumps delivers flow to the Reactor Coolant system	Credit given for operator action to start standby charging pump if aligned pump fails. [Operator Actions: CVN-MAN03]	Automatic PLS actuation (low prz water level relative to programmed level).	Demand	A Chap15 D 6.3 O (3)
CSP CVS or Manual control of PRHR	CVCS	SLB-D, SLB-U, SLB-V	1 out of 2 CVS makeup pumps delivers flow to the Reactor Coolant system **OR** PRHR manually regulated (stopped initially to limit cooldown, restarted as necessary to remove core heat)	Credit given for manual control of the PRHR system and for operator action to start standby charging pump if aligned pump fails. [Operator Actions: CVN-MAN03, PRN-MAN03]	Automatic CVS actuation via PLS (low prz water level relative to programmed level)or on CMT actuation signal.	6 hours (CVS), 24 hours (PRHR)	A Chap15 D 6.3 D 15.1.5
DAS DAS - MG-Set Trip & Turbine Trip, ATWS with loss of main feed	DAS	ATWS, ATW-S	Successful generation of DAS signal to trip control rod motor-generator (MG) sets	Credit for manual actuation of DAS if automatic actuation fails. [Operator Actions: ATW-MAN04]	Automatic DAS actuation on low WR SG level	Demand	A Chap27 O (4)

O (2) AP600 PRA Report Section 6.4.12
O (3) AP600 PRA Report Section 6.4.13
O (4) AP600 PRA Report Section 6.4.15

Table 6-1 (Sheet 14 of 34)

SUMMARY OF EVENT TREE TOP EVENTS SUCCESS CRITERIA
(Internal Initiating Events at Power Cases)

Event Case Name	Top Event Name	Event Trees	Success Criteria	Manual Actions	Dependencies and Modeled Actuations	Mission Time	Basis
DAS1 DAS - MG-Set Trip & Turbine Trip, ATWS with main feed available	DAS	ATW-T	Successful generation of DAS signal to trip control rod motor-generator (MG) sets	Credit for manual actuation of DAS if automatic actuation fails. [Operator Actions: ATW-MAN06]	Automatic DAS actuation on low WR SG level	Demand	A Chap27 O (4)
DGEN Emergency Diesel Generators operate following LOOP	DGEN	LOSP	Emergency Diesel Generators start to supply power to the associated AC power trains within 30 minutes of LOOP and continue until offsite power is restored **AND** Successful operation of any load shed and sequencing necessary for diesel generator operation	Credit given for manual diesel generator actuation (from the main control room) if automatic actuation fails [Operator Actions: ZON-MAN01]	Automatic actuation of each diesel generator on actuation of the associated bus undervoltage relay; Manual actuation via PLS	2.5 hours	A Chap22
FWF Main Feedwater (Loss of feed to 1 SG)	MFW	LMFW1	1 out of 2 main feedwater trains (condensate pump, FW booster pump, FW pump, FW control valve) delivers flow from deaerator storage tank to the 1 available steam generator **AND** Condenser and Turbine Bypass available (see COND) **AND** Feed from condenser to deaerator storage tank (see CDS)	None	Automatic control via PLS	24 hours	A Chap14 D 10.4.7 D 15.2.7

O (4) AP600 PRA Report Section 6.4.15

Table 6-1 (Sheet 15 of 34)

SUMMARY OF EVENT TREE TOP EVENTS SUCCESS CRITERIA
(Internal Initiating Events at Power Cases)

Event Case Name	Top Event Name	Event Trees	Success Criteria	Manual Actions	Dependencies and Modeled Actuations	Mission Time	Basis
FWT Main Feedwater available after reactor trip	MFW	TRANS, LRCS, POWEX, LCCW, ATW-T	1 out of 2 main feedwater trains (condensate pump, FW booster pump, FW pump, FW control valve) deliver flow from deaerator storage tank to 1 out of 2 steam generators **AND** Condenser and Turbine Bypass available (see COND) **AND** Feed from condenser to deaerator storage tank (see CDS)	None	Automatic control via PLS	24 hours	A Chap14 D 10.4 7 D 15.2.7
IW1A Gravity Injection	IRWST	SI-LB	IRWST injection into the RCS through 1 out of 2 check valve/squib valve paths in 1 out of 1 intact injection line.	Credit given for manual activation of squib valves if automatic actuation fails. [Operator Actions· ADN-MAN01]	None	24 hours	A Chap12 A A3.2 D 6.3
IW1AM Gravity Injection	IRWST	SI-LB	IRWST injection into the RCS through 1 out of 2 check valve/squib valve paths in 1 out of 1 intact injection line.	Credit given for manual actuation only [Operation Actions: ADN-MAN01]	None	24 hours	A Chap12 A A3.2 D 6.3

Table 6-1 (Sheet 16 of 34)

SUMMARY OF EVENT TREE TOP EVENTS SUCCESS CRITERIA
(Internal Initiating Events at Power Cases)

Event Case Name	Top Event Name	Event Trees	Success Criteria	Manual Actions	Dependencies and Modeled Actuations	Mission Time	Basis
IW2AB Gravity Injection	IRWST	TRANS, LRCS, LMFW1, LMFW, POWEX, LCCW, LCOND, LCAS, SLB-D, SLB-U, SLB-V, MLOCA, CMTLB, SLOCA, RCSLK, PRSTR, SGTRC, ATWS, ATW-S, ATW-T	IRWST injection into the RCS through 1 out of 2 check valve/squib valve paths in 1 out 2 injection lines.	Credit given for manual actuation if automatic actuation fails. [Operator Actions: ADN-MAN01]	Automatic actuation via PMS (low-low CMT level in 1 out of 2 CMTs.)	24 hours	A Chap12 A A3.2 D 6.3
IW2ABA Gravity Injection	IRWST	LLOCA SPADS	IRWST injection into the RCS through 1 out of 2 check valve/squib valve paths in 1 out of 2 injection lines.	None	Automatic actuation via PMS (low-low CMT level in 1 out of 2 CMTs)	24 hours	A Chap12 A A3.4 D 6 3 D 15.6.5

Table 6-1 (Sheet 17 of 34)

SUMMARY OF EVENT TREE TOP EVENTS SUCCESS CRITERIA
(Internal Initiating Events at Power Cases)

Event Case Name	Top Event Name	Event Trees	Success Criteria	Manual Actions	Dependencies and Modeled Actuations	Mission Time	Basis
IW2ABM Gravity Injection	IRWST	TRANS, LRCS, LMFW1, LMFW, POWEX, LCCW, LCOND, LCAS, SLB-D, SLB-U, SLB-V	IRWST injection into the RCS through 1 out of 2 check valve/squib valve paths in 1 out of 2 injection lines.	Credit given for manual actuation only. [Operator Actions: ADN-MAN01]	None	24 hours	A Chap12 A A3.3 D 6.3
IW2ABP Gravity Injection	IRWST	LOSP	IRWST injection into the RCS through 1 out of 2 check valve/squib valve paths in 1 out of 2 injection lines.	Credit given for manual actuation if automatic actuation fails. [Operator Actions: ADN-MAN01]	Automatic actuation via PMS (low-low CMT level in 1 out of 2 CMTs)	24 hours	A Chap12 A A3.2 D 6.3
IW2ABPM Gravity Injection	IRWST	LOSP	IRWST injection into the RCS through 1 out of 2 check valve/squib valve paths in 1 out of 2 injection lines.	Credit given for manual actuation only. [Operator Actions: ADN-MAN01]	None	24 hours	A Chap12 A A3.2 D 6.3
IW2ABB Gravity Injection	IRWST	LOSP	IRWST injection into the RCS through 1 out of 2 check valve/squib valve paths in 1 out of 2 injection lines.	Credit given for manual actuation if automatic actuation fails [Operator Actions: ADN-MAN01]	Automatic actuation via PMS (low-low CMT level in 1 out of 2 CMTs)	24 hours	A Chap12 A A3.2 D 6 3

Table 6-1 (Sheet 18 of 34)

SUMMARY OF EVENT TREE TOP EVENTS SUCCESS CRITERIA
(Internal Initiating Events at Power Cases)

Event Case Name	Top Event Name	Event Trees	Success Criteria	Manual Actions	Dependencies and Modeled Actuations	Mission Time	Basis
IW2ABBM Gravity Injection	IRWST	LOSP	IRWST injection into the RCS through 1 out of 2 check valve/squib valve paths in 1 out of 2 injection lines.	Credit given for manual actuation only. [Operator Actions: ADN-MAN01]	None	24 hours	A Chap12 A A3.3 D 6.3
MGSET M-G sets trip	MGSET	ATWS, ATW-S, ATW-T	1 out of 2 MGSET exciter coil breakers open on 2 out of 2 MG sets following DAS signal.	None	Actuation via DAS	Demand	O (5)
PCB Adequate passive containment cooling water drain, after SBO	CHR	LOSP	1 out of 3 PCS water drain valve paths open	None	None	24 hours	A Chap13 D 6.2 D 6.3
PCP Adequate passive containment cooling water drain	CHR	LOSP	1 out of 3 PCS water drain valve paths open	None	None	24 hours	A Chap13 D 6.2 D 6.3

O (5) AP600 PRA Report Section 6.4.19

Table 6-1 (Sheet 19 of 34)

SUMMARY OF EVENT TREE TOP EVENTS SUCCESS CRITERIA
(Internal Initiating Events at Power Cases)

Event Case Name	Top Event Name	Event Trees	Success Criteria	Manual Actions	Dependencies and Modeled Actuations	Mission Time	Basis
PCT Adequate passive containment cooling water drain	CHR	LLOCA, SPADS, MLOCA, CMTLB, SI-LB, SLOCA, PRSTR, RCSLK, SGTR, TRANS, LRCS, MFW1, POWEX, LCCW, LMFW, LCOND, LCAS, SLB-D, SLB-U, SLB-V, ATWS, ATW-S, ATW-T	1 out of 3 PCS water drain valve paths open	None	None	24 hours	A Chap13 D 6 2 D 6.3
PRES Adequate Pressure Relief during ATWS	PRES	ATWS, ATW-S	2 out of 2 Pressurizer Safety Valves open	None	None	Demand	O (6)

O (6) AP600 PRA Report Section 6 4.20

Table 6-1 (Sheet 20 of 34)

SUMMARY OF EVENT TREE TOP EVENTS SUCCESS CRITERIA
(Internal Initiating Events at Power Cases)

Event Case Name	Top Event Name	Event Trees	Success Criteria	Manual Actions	Dependencies and Modeled Actuations	Mission Time	Basis
PRESU Adequate Pressure Relief during ATWS	PRES	ATWS, ATW-S	2 out of 2 Pressurizer Safety Valves in open position **AND** adequate reactivity feedback to maintain RCS pressure below ASME service level C limit	None	None	Demand	S, O (6)
PRI PRHR Isolation	PRISO	PRSTR	1 out of 1 MOVs on the PRHR inlet line close **AND** 2 out of 2 AOVs on PRHR outlet line reclose.	Credit given only for manual actuation. [Operator Actions: PRI-MAN01]	None	24 hours	A Chap8 A A3.3 D 6.3
PRL PRHR	PRHR	PRSTR, RCSLK, SLOCA, SGTRC	1 out of 2 AOVs in the PRHR heat exchanger outlet line opens to allow flow through the heat exchanger **AND** 1 out of 2 AOVs in the IRWST gutter drain line close to divert water into the IRWST	Credit given for manual actuation if automatic actuation fails. [Operator Actions: PRN-MAN02, HPM-MAN01]	Automatic actuation via PMS (CMT actuation signal) or DAS (low wide-range SG level OR high RCS hot leg temperature, depending on the initiating event)	24 hours	A Chap8 A A3.2 D 6.3 D 15.6.3
PRP PRHR following LOOP	PRHR	LOSP	1 out of 2 AOVs on the PRHR heat exchanger outlet line opens to allow flow through the heat exchanger **AND** 1 out of 2 AOVs in the IRWST gutter drain line close to divert water into the IRWST	Credit given for manual actuation if automatic actuation fails. [Operator Actions: PRN-MAN02, HPM-MAN01]	Automatic actuation via PMS (low NR SG water level coincident with low SFW flow), PMS and DAS (low WR SG water level), or DAS (high hot leg temperature	24 hours	A Chap8 A A3.2 D 6.3 D Chap15

O (6) AP600 PRA Report Section 6.4.20

Table 6-1 (Sheet 21 of 34)

SUMMARY OF EVENT TREE TOP EVENTS SUCCESS CRITERIA
(Internal Initiating Events at Power Cases)

Event Case Name	Top Event Name	Event Trees	Success Criteria	Manual Actions	Dependencies and Modeled Actuations	Mission Time	Basis
PRS PRHR	PRHR	SGTR	1 out of 2 AOVs on the PRHR heat exchanger outlet line opens to allow flow through the heat exchanger **AND** 1 out of 2 AOVs in the IRWST gutter drain line close to divert water into the IRWST	Credit given for manual actuation if automatic actuation fail. [Operator Actions: PRN-MAN02, HPM-MAN01]	Automatic actuation via PMS (CMT actuation signal following low prz pressure S signal)	24 hours	A Chap8 A A3.2 D Chap15
PRT PRHR	PRHR	TRANS, LRCS, LMFW1, LMFW, POWEX, LCCW, LCOND, SLB-U, SLB-D, SLB-V	1 out of 2 AOVs on the PRHR heat exchangers outlet line open to allow flow through the heat exchanger **AND** 1 out of 2 AOVs in the IRWST gutter drain line close to divert water into the IRWST	Credit given for manual actuation if automatic actuation fails. [Operator Actions: PRN-MAN01, HPM-MAN01]	Automatic actuation via PMS (low NR SG water level coincident with low SFW flow), PMS and DAS (low WR SG water level), or DAS (high hot leg temperature)	24 hours	A Chap8 A A3.2 D 6.3 D Chap15
PRTA PRHR	PRHR	ATWS, ATW-S	1 out of 2 AOVs on the PRHR heat exchanger outlet line open to allow flow through the heat exchanger **AND** 1 out of 2 AOVs in the IRWST gutter drain line close to divert water into the IRWST	None	Automatic actuation via PMS (low NR SG water level coincident with low SFW flow), PMS and DAS (low WR SG water level), or DAS (high hot leg temperature	24 hours	A A4.2

Table 6-1 (Sheet 22 of 34)

SUMMARY OF EVENT TREE TOP EVENTS SUCCESS CRITERIA (Internal Initiating Events at Power Cases)

Event Case Name	Top Event Name	Event Trees	Success Criteria	Manual Actions	Dependencies and Modeled Actuations	Mission Time	Basis
PRW PRHR	PRHR	LCAS, LOSP	1 out of 2 AOVs on the PRHR heat exchangers common outlet line open to allow flow through the heat exchanger **AND** 1 out of 2 AOVs in the IRWST gutter drain line close to divert water into the IRWST	None	Valves will open on loss of support (air or dc power) resulting from the initiating event. Automatic actuation via PMS or DAS (low WR SG water level) would also be expected	24 hours	A Chap8 A A3.2 D 6.3
PRSOV Pressurizer Safety Valves reclose	PRSOV	TRANS, LRCS, LMFW1, POWEX, LMFW, LCCW, LCAS, LOSP, ATWS, LCOND	2 out of 2 pressurizer safety valves reclose after opening	None	None	Demand	O (7)
R05 Grid recovery	R05	LOSP	Offsite power recovered within 0 5 hour.	None	None	Demand	O (8)
RCL RCP Trip	CMT	SLOCA, SGTR, PRSTR, RCSLK, SLB-D, SLB-U, SLB-V	4 out of 4 Reactor Coolant Pumps tripped.	Credit for manual tripping of RCPs if automatic trip fails. [Operator Actions: RCN-MAN01]	Automatic actuation via PMS (CMT actuation), or DAS (low prz level).	Demand	D Chap15 O (9)

O (7) AP600 PRA Report Section 6.4.23
O (8) AP600 PRA Report Section 6 4.24
O (9) AP600 PRA Report Section 6.4.25

Table 6-1 (Sheet 23 of 34)

SUMMARY OF EVENT TREE TOP EVENTS SUCCESS CRITERIA
(Internal Initiating Events at Power Cases)

Event Case Name	Top Event Name	Event Trees	Success Criteria	Manual Actions	Dependencies and Modeled Actuations	Mission Time	Basis
RCN RCP Trip	CMT	MLOCA, CMTLB, SI-LB	4 out of 4 Reactor Coolant Pumps tripped.	Credit for manual tripping of RCPs if automatic trip fails. [Operator Actions: RCN-MAN01]	Automatic actuation via PMS (CMT actuation), or DAS (low prz level).	Demand	D Chap15
RCT RCP Trip	CMT	TRANS, LMFW1, POWEX, LMFW, LCOND, LCCW, LCAS, ATWS, ATW-S, ATW-T	4 out of 4 Reactor Coolant Pumps tripped.	Credit for manual tripping of RCPs if automatic trip fails [Operator Actions: RCN-MAN01]	Automatic actuation via PMS (CMT actuation).	Demand	D Chap15
RECIRCB Water Recirculation to RCS, station blackout	RECIR	LOSP	1 out of 4 containment recirc paths open; 2 paths have a check valve in series with a squib valve and the other 2 paths have a squib valve. **AND** 1 IRWST injection path remains open; each IRWST path has a check valve in series with a squib valve	Credit given for manual opening of squib recirculation valves if automatic actuation fails. [Operator Actions: REN-MAN02, REN-MAN04, RHN-MAN06]	Automatic actuation via PMS (Low-3 IRWST water level and ADS signal)	24 hours	A Chap12 A A3.5

Table 6-1 (Sheet 24 of 34)

SUMMARY OF EVENT TREE TOP EVENTS SUCCESS CRITERIA
(Internal Initiating Events at Power Cases)

Event Case Name	Top Event Name	Event Trees	Success Criteria	Manual Actions	Dependencies and Modeled Actuations	Mission Time	Basis
RECIRC1B Water Recirculation to RCS, after station blackout, with failure of containment isolation	RECIR	LOSP	2 out of 4 containment recirc paths open; 2 paths have a check valve in series with a squib valve and the other 2 paths have a squib valve. **AND** 1 IRWST injection path remains open; each IRWST path has a check valve in series with a squib valve	Credit given for manual opening of squib recirculation valves if automatic actuation fails. [Operator Actions: REN-MAN02, REN-MAN04, RHN-MAN06]	Automatic actuation via PMS (Low-3 IRWST water level and ADS signal)	24 hours	A Chap12 A A3.5
RECIRC Water Recirculation to RCS	RECIR	TRANS, LRCS, LMFW1, POWEX, LMFW, LCOND, LCCW, LCAS, SLB-U, SLB-D, SLB-V, LLOCA, SPADS, MLOCA, CMTLB, SI-LB, SLOCA PRSTR, RCSLK, SGTR, ATWS, ATW-S, ATW-T	1 out of 4 containment recirc paths open; 2 paths have a check valve in series with a squib valve and the other 2 paths have a squib valve. **AND** 1 IRWST injection path remains open; each IRWST path has a check valve in series with a squib valve	Credit given for manual opening of squib recirculation valves if automatic actuation fails. [Operator Actions: REN-MAN02, REN-MAN04, RHN-MAN06]	Automatic actuation via PMS (Low-3 IRWST water level and ADS signal)	24 hours	A Chap12 A A3.5

Table 6-1 (Sheet 25 of 34)

SUMMARY OF EVENT TREE TOP EVENTS SUCCESS CRITERIA
(Internal Initiating Events at Power Cases)

Event Case Name	Top Event Name	Event Trees	Success Criteria	Manual Actions	Dependencies and Modeled Actuations	Mission Time	Basis
RECIRC1 Water Recirculation to RCS, with failure of containment isolation	RECIR	TRANS, LRCS, LMFW1, POWEX, LMFW, LCOND, LCCW, LCAS, SLB-U, SLB-D, SLB-V, LLOCA, SPADS, MLOCA, CMTLB, SI-LB, SLOCA PRSTR, RCSLK, SGTR, ATWS, ATW-S, ATW-T	2 out of 4 containment recirc paths open; 2 paths have a check valve in series with a squib valve and the other 2 paths have a squib valve. **AND** 1 IRWST injection path remains open; each IRWST path has a check valve in series with a squib valve	Credit given for manual opening of squib recirculation valves if automatic actuation fails. [Operator Actions: REN-MAN02, REN-MAN04, RHN-MAN06]	Automatic actuation via PMS (Low-3 IRWST water level and ADS signal)	24 hours	A Chap12 A A3.5

Table 6-1 (Sheet 26 of 34)

SUMMARY OF EVENT TREE TOP EVENTS SUCCESS CRITERIA
(Internal Initiating Events at Power Cases)

Event Case Name	Top Event Name	Event Trees	Success Criteria	Manual Actions	Dependencies and Modeled Actuations	Mission Time	Basis
RECIRCP Water Recirculation to RCS, LOOP with power recovery	RECIR	LOSP	1 out of 4 containment recirc paths open; 2 paths have a check valve in series with a squib valve and the other 2 paths have a squib valve. **AND** 1 IRWST injection path remains open; each IRWST path has a check valve in series with a squib valve	Credit given for manual opening of squib recirculation valves if automatic actuation fails. [Operator Actions: REN-MAN02, REN-MAN04, RHN-MAN06]	Automatic actuation via PMS (Low-3 IRWST water level and ADS signal)	24 hours	A Chap12 A A3.5
RECIRC1P Water Recirculation to RCS, LOOP with power recovery, with failure of containment isolation	RECIR	LOSP	2 out of 4 containment recirc paths open; 2 paths have a check valve in series with a squib valve and the other 2 paths have a squib valve. **AND** 1 IRWST injection path remains open; each IRWST path has a check valve in series with a squib valve	Credit given for manual opening of squib recirculation valves if automatic actuation fails. [Operator Actions: REN-MAN02, REN-MAN04, RHN-MAN06]	Automatic actuation via PMS (Low-3 IRWST water level and ADS signal)	24 hours	A Chap12 A A3.5

Table 6-1 (Sheet 27 of 34)

SUMMARY OF EVENT TREE TOP EVENTS SUCCESS CRITERIA
(Internal Initiating Events at Power Cases)

Event Case Name	Top Event Name	Event Trees	Success Criteria	Manual Actions	Dependencies and Modeled Actuations	Mission Time	Basis
RNH RNS Injection/Cooling to RCS	NRHR	TRANS, LRCS, LMFW1, POWEX, LMFW, LCOND, LCAS, SLB-U, SLB-D, SLB-V, SLOCA, MLOCA, SI-LB, CMTLB, PRSTR, RCSLK, SGTR, ATWS, ATW-S, ATW-T	1 out of 2 RNS pumps inject from the SFS cask washdown pit into the RCS (i e., 2 out of 2 containment isolation MOVs open **AND** 1 out of 2 NRHR pumps operate) **AND** CCW cooling is provided to an operable RNS HX **AND EITHER** 1 out of 4 containment recirc paths open, 2 paths have a check valve in series with a squib valve and the other 2 paths have a squib valve (if only one RNS pump is running) **OR** 2 out of 4 containment recirc paths open; 2 paths have a check valve in series with a squib valve and the other 2 paths have a squib valve. (if both pumps are running) **OR** 1 out of 4 containment recirc paths open, 2 paths have a check valve in series with a squib valve and the other 2 paths have a squib valve (if both pumps are running AND operators throttle RNS flowrate to limit pump suction requirements).	Credit given for manual actuation of RNS injection. Credit is given for manual backup of automatic opening of the recirculation line squib valves. [Operator Actions: RHN-MAN01, REN-MAN02, REN-MAN04, RHN-MAN06]	None	24 hours	A Chap17 A A3.2 A A3.3 D 6.3

Table 6-1 (Sheet 28 of 34)

SUMMARY OF EVENT TREE TOP EVENTS SUCCESS CRITERIA
(Internal Initiating Events at Power Cases)

Event Case Name	Top Event Name	Event Trees	Success Criteria	Manual Actions	Dependencies and Modeled Actuations	Mission Time	Basis
RNHP RNS Injection/Cooling to RCS, LOOP with power recovery	NRHR	LOSP	1 out of 2 RNS pumps inject from the SFS cask washdown pit into the RCS (i.e., 2 out of 2 containment isolation MOVs open **AND** 1 out of 2 NRHR pumps operate) **AND** CCW cooling is provided to an operable RNS HX **AND EITHER** 1 out of 4 containment recirc paths open; 2 paths have a check valve in series with a squib valve and the other 2 paths have a squib valve (if only one RNS pump is running) **OR** 2 out of 4 containment recirc paths open; 2 paths have a check valve in series with a squib valve and the other 2 paths have a squib valve. (if both pumps are running) **OR** 1 out of 4 containment recirc paths open; 2 paths have a check valve in series with a squib valve and the other 2 paths have a squib valve (if both pumps are running AND operators throttle RNS flowrate to limit pump suction requirements).	Credit given for manual actuation of RNS injection. Credit is given for manual backup of automatic opening of the recirculation line squib valves. [Operator Actions: RHN-MAN01, REN-MAN02, REN-MAN04, RHN-MAN06]	None	24 hours	A Chap17 A A3.2 A A3.3 D 6.3

Table 6-1 (Sheet 29 of 34)

SUMMARY OF EVENT TREE TOP EVENTS SUCCESS CRITERIA
(Internal Initiating Events at Power Cases)

Event Case Name	Top Event Name	Event Trees	Success Criteria	Manual Actions	Dependencies and Modeled Actuations	Mission Time	Basis
RNP RNS LOOP with power recovery	NRHR	LOSP	1 out of 2 RNS pumps inject from the SFS cask washdown pit into the RCS (i.e., 2 out of 2 containment isolation MOVs open **AND** 1 out of 2 NRHR pumps operate) **AND EITHER** 1 out of 4 containment recirc paths open; 2 paths have a check valve in series with a squib valve and the other 2 paths have a squib valve (if only one RNS pump is running) **OR** 2 out of 4 containment recirc paths open; 2 paths have a check valve in series with a squib valve and the other 2 paths have a squib valve (if both pumps are running) **OR** 1 out of 4 containment recirc paths open; 2 paths have a check valve in series with a squib valve and the other 2 paths have a squib valve (if both pumps are running AND operators throttle RNS flowrate to limit pump suction requirements)	Credit given for manual actuation of RNS injection. Credit is given for manual backup of automatic opening of the recirculation line squib valves. [Operator Actions. RHN-MAN01, REN-MAN02, REN-MAN04, RHN-MAN06]	None	24 hours	A Chap17 A A3.2 A A3.3 D 6.3

Table 6-1 (Sheet 30 of 34)

SUMMARY OF EVENT TREE TOP EVENTS SUCCESS CRITERIA
(Internal Initiating Events at Power Cases)

Event Case Name	Top Event Name	Event Trees	Success Criteria	Manual Actions	Dependencies and Modeled Actuations	Mission Time	Basis
RNR RNS	NRHR	TRANS, LRCS, LMFW1, POWEX, LMFW, LCOND, LCAS, SLB-U, SLB-D, SLB-V, SLOCA, MLOCA, CMTLB, PRSTR, RCSLK, SGTR, ATWS, ATW-S, ATW-T	1 out of 2 RNS pumps inject from the cask washdown pit into the RCS (2 out of 2 containment isolation MOVs open **AND** 1 out of 2 NRHR pumps/heat exchangers operate) **AND EITHER** 1 out of 4 containment recirc paths open; 2 paths have a check valve in series with a squib valve and the other 2 paths have a squib valve (if only one RNS pump is running) **OR** 2 out of 4 containment recirc paths open; 2 paths have a check valve in series with a squib valve and the other 2 paths have a squib valve (if both pumps are running) **OR** 1 out of 4 containment recirc paths open; 2 paths have a check valve in series with a squib valve and the other 2 paths have a squib valve (if both pumps are running AND operators throttle RNS flowrate to limit pump suction requirements).	Credit given for manual actuation of RNS injection. Credit is given for manual backup of automatic opening of the recirculation line squib valves. [Operator Actions: RHN-MAN01, REN-MAN02, REN-MAN04, RHN-MAN06]	None	24 hours	A Chap17 A A3.2 A A3.3 D 6.3

Table 6-1 (Sheet 31 of 34)

SUMMARY OF EVENT TREE TOP EVENTS SUCCESS CRITERIA
(Internal Initiating Events at Power Cases)

Event Case Name	Top Event Name	Event Trees	Success Criteria	Manual Actions	Dependencies and Modeled Actuations	Mission Time	Basis
RNN RNS Cooling of IRWST	NRHR	TRANS, LRCS, LMFW1, POWEX, LMFW, LCOND, LCAS	1 out of 2 RNS pumps circulate IRWST water with CCW cooling (i.e., 2 out of 2 containment isolation MOVs open **AND** 1 out of 2 NRHR pumps operate) **AND** CCW cooling is provided to an operable RNS HX	Credit given for manual actuation of RNS actuation. [Operator Actions: RNH-MAN01, RNA-MAN09]	None	24 hours	A Chap17 D 5.4.7.1
RNNP RNS Cooling of IRWST, LOOP with power recovery	NRHR	LOSP	1 out of 2 RNS pumps circulate IRWST water with CCW cooling (i.e., 2 out of 2 containment isolation MOVs open **AND** 1 out of 2 NRHR pumps operate) **AND** CCW cooling is provided to an operable RNS HX	Credit given for manual actuation of RNS actuation. [Operator Actions: RNH-MAN01, RNH-MAN09]	None	24 hours	A Chap17 D 5.4.7.1
RTPMS Reactor Trip via PMS	RTPMS	ATWS, ATW-S	Trip signal provided to the reactor trip breakers in both protection system cabinets **AND** 1 out of 2 reactor trip breakers open on each path of 1 out of 2 protection system cabinets	Credit is given for manual actuation as a backup to automatic actuation [Operator Actions: ATW-MAN03]	Automatic actuation via PMS (several signals anticipated for each initiating event)	Demand	A A4.2 O (10)

O (10) AP600 PRA Report Section 6.4.28

Table 6-1 (Sheet 32 of 34)

SUMMARY OF EVENT TREE TOP EVENTS SUCCESS CRITERIA
(Internal Initiating Events at Power Cases)

Event Case Name	Top Event Name	Event Trees	Success Criteria	Manual Actions	Dependencies and Modeled Actuations	Mission Time	Basis
RTPMS1 Reactor Trip via PMS	RTPMS	ATW-T	Trip signal provided to the reactor trip breakers in both protection system cabinets **AND** 1 out of 2 reactor trip breakers open on each path of 1 out of 2 protection system cabinets	Credit is given for manual actuation as a backup to automatic actuation [Operator Actions: ATW-MAN05]	Automatic actuation via PMS (several signals anticipated for each initiating event)	Demand	A A4.2 O (10)
RTSTP Manual Actuation of Rod Control System for RCCA Insertion	RTSTP	ATWS, ATW-S	Operator manually initiates control rod insertion via rod control system **AND** at least one bank of control rods insertion for at least 1 minute	Credit is given only for manual actuation of the rod control system [Operator Actions: ATW-MAN01]	Manual actuation via PLS for rod control system.	Demand	O (11)
SDMAN Manual controlled shutdown	SDMAN	RCSLK	Operators perform a controlled shutdown of the reactor after recognizing that an RCS leak is in progress	Credit is given only for manual action [Operator Actions: RTN-MAN01]	Control systems necessary to establish stable shutdown	Demand	D 9.3.6.4 A 4.8.1
SFW Startup Feedwater (condensate system unavailable)	SFW	LCOND	1 out of 2 Startup Feedwater pumps deliver flow from the condensate storage tank to 1 out of 2 SGs.	Credit given for manual actuation if automatic actuation fails. [Operator Actions: FWN-MAN02, HPM-MAN01, REG-MAN00]	Automatic actuation via PLS (low NR SG water level or low FW flow)	24 hours	A Chap14 D 10.4.7 D 15.2.7
SFW1 Startup Feedwater (SGTR)	SFW	SGTR	1 out of 2 Startup Feedwater pumps delivers flow from the condensate storage tank to the intact steam generator.	Credit given for manual actuation if automatic actuation fails. [Operator Actions: FWN-MAN02, HPM-MAN01, REG-MAN00]	Automatic actuation via PLS (low NR SG water level or low FW flow)	24 hours	A Chap14 D 10.4.7 D 15.6.3

O (10) AP600 PRA Report Section 6.4.28
O (11) AP600 PRA Report Section 6 4 29 – Note that for AP1000, this event case has no meaning since the UET is 0.

Table 6-1 (Sheet 33 of 34)

SUMMARY OF EVENT TREE TOP EVENTS SUCCESS CRITERIA
(Internal Initiating Events at Power Cases)

Event Case Name	Top Event Name	Event Trees	Success Criteria	Manual Actions	Dependencies and Modeled Actuations	Mission Time	Basis
SFWA Startup Feedwater (ATWS)	PRHR2	ATWS, ATW-S	1 out of 2 startup feedwater pumps deliver flow from the condensate storage tank to 2 out of 2 steam generators	None	Automatic actuation via PLS (low NR SG water level or low FW flow)	24 hours	S (1)
SFWM Startup Feedwater (Instrument Air failure)	SFW	LCAS	1 out of 2 Startup Feedwater trains deliver flow from the condensate storage tank to 1 out of 2 SGs **AND** Operators locally operate feed reg valves	Credit for manual actuation if automatic actuation fails, plus required manual action to regulate SFW flow following loss of instrument air initiating event. [Operator Actions: FWN-MAN02, HPM-MAN01, REG-MAN00]	Automatic actuation via PLS (low NR SG water level or low FW flow)	24 hours	A Chap14 D 10.4.7 D 15.2.7
SFWP Startup Feedwater (LOOP)	SFW	LOSP	1 out of 2 Startup Feedwater pumps deliver flow from the condensate storage tank to 1 out of 2 SGs, following power recovery or successful diesel generator start/load.	Credit given for manual actuation if automatic actuation fails. [Operator Actions: FWN-MAN03, HPM MAN01, REG-MAN00]	Automatic actuation via PLS (low NR SG water level or low FW flow)or diesel generator sequence	24 hours	A Chap14 D 10.4.7 D 15.2.7
SFWT Startup Feedwater	SFW	TRANS, LRCS, LMFW1, POWEX, LCCW, LMFW	1 out of 2 Startup Feedwater pumps deliver flow to 1 out of 2 steam generators from the condensate storage tank **OR** 1 out of 2 Startup Feedwater pumps deliver flow to 1 out of 2 steam generators from the deaerator storage tank AND Condenser and Turbine Bypass available (see COND) **AND** Feed from condenser to deaerator storage tank (see CDS)	Credit given for manual actuation if automatic actuation fails. [Operator Actions: FWN-MAN02, HPM MAN01, REG-MAN00]	Automatic actuation and control via PLS (low NR SG water level or low FW flow)	24 hours	A Chap14 D 10 4.7 D 15.2.7

S (1) Sensitivity study has been performed on AP1000 that shows this case to be successful.

Table 6-1 (Sheet 34 of 34)

SUMMARY OF EVENT TREE TOP EVENTS SUCCESS CRITERIA
(Internal Initiating Events at Power Cases)

Event Case Name	Top Event Name	Event Trees	Success Criteria	Manual Actions	Dependencies and Modeled Actuations	Mission Time	Basis
SGHL SG overfill protection for SGTR	SGISO	SGTR	Chemical and Volume Control system isolated. **AND** Startup FW flow to faulted SG isolated.	Credit given for manual actuation and automatic actuation. [Operator Actions: SGHL-MAN01]	Automatic actuation via PMS (High-2 steam generator water level).	Demand	D 15.6.3
SGTR Tube rupture given MSLB or consequential SLB with 2 SG Blowdown	NSGTR	SLB-D, SLB-U, SLB-V	No consequential steam generator tube rupture in either blowing down steam generator	None	None.	Demand	A Chap31 O (12)
SGTR1 Tube Rupture given MSLB with 1 SG Blowdown	NSGTR	SLB-U	No consequential steam generator tube rupture in the blowing down steam generator	None	None	Demand	A Chap31 O (12)
SLSOV Reclosure of Main Steamline Valves	SLSOV	TRANS, POWEX, LCCW, LRCS	Reclosure of the power-operated relief valve (PORV) or associated PORV block valve, **AND** reclosure of the one open safety valve in each main steamline, given unavailability of condenser steam dump	None	Steam generator PORV actuation via PLS	Demand	O (13)
SLSOV1 Reclosure of Main Steamline Valves	SLSOV	LMFW1, LMFW, LCCW, LCOND, LOSP	Reclosure of the power-operated relief valve (PORV) or associated PORV block valve, **AND** reclosure of the two open safety valves in each main steamline, given unavailability of condenser steam dump	None	Steam generator PORV actuation via PLS	Demand	O (13)
SLSOV2 Reclosure of Main Steamline Valves	SLSOV	LCAS	Reclosure of one PORV and one safety valve on the main steamline from the ruptured generator	None	Steam generator PORV actuation via PLS	Demand	O (13)
SLSOV3 Reclosure of Main Steamline Valves	SGISO	SGTR	Reclosure of one PORV and one safety valve on the main steamline from the ruptured steam generator	None	Steam generator PORV actuation via PLS	Demand	O (13)

O (12) AP600 PRA Report Section 6.4.33 O (13) AP600 PRA Report Section 6.4.34

Table 6-2 (Sheet 1 of 9)

SUMMARY OF SUCCESS CRITERIA FOR THE MITIGATING SYSTEMS

Function/Accident Initiator	Success Sequence Identifiers	Success Criteria	Basis
Reactivity Control			
• Transient (except spurious trip or manual shutdown), small and medium loss of coolant accidents, RCS leak, steam generator tube rupture, PRHR heat exchanger tube rupture	TRA-OK (all) NLO-OK (all) SLO-OK (all) RLK-OK1 SGR-OK (all) LSP-OK (all) SBO-OK (all)	Reactor trip[1] **OR** Turbine trip via the diverse actuation system[2] and manual boration[3]	Ref. 6-4, Chap. 15 PRA Appendix A (ATWS) Reference 6-3,6-5
• Transient with cooldown of the reactor coolant system	SLB-OK (all)	Reactor trip and automatic or manual boration[3]	Ref. 6-4, Chap. 15
• Large loss of coolant accident	LLO-OK1	Not required[4]	Ref. 6-4, Chap. 15 (LLOCA)
Overpressure Control			
• Anticipated transient without scram	ATW-OK[1-6]	2 out of 2 pressurizer safety valves[2]	PRA Appendix A (ATWS) Ref. 6-3
• Transients	TRA-OK1 TRA-OK2 LSP-OK2 ATW-OK[7-9]	Secondary side cooling[6] **OR**	Design Basis:
	TRA-OK3 LSP-OK3 SBO-OK1	Passive residual heat removal operation **OR**	Ref. 6-4 Ch. 15, Ref. 6-5
	TRA-OK[4-7] LSP-OK[4-7] SBO-OK[2-3]	Opening of one pressurizer safety valve or opening of reactor coolant system depressurization (ADS) valves[5]	PRA Appendix A

Table 6-2 (Sheet 2 of 9)

SUMMARY OF SUCCESS CRITERIA FOR THE MITIGATING SYSTEMS

Function/Accident Initiator	Success Sequence Identifiers	Success Criteria	Basis
• Small LOCA (or RCS leak or SGTR or PRHR HX tube rupture) with failure of PRHR	SLO-OK (all)	Opening of one pressurizer safety valve or opening of reactor coolant system depressurization (ADS) valves[5]	PRA Appendix A
• Loss of coolant accident (other than SLOCA/RCS leak/SGTR/PRHR tube rupture with PRHR failure)	(all LOCA)	Not required	Ref. 6-4, Chap. 15
Core Cooling			
• Transient	TRA-OK1	1 out of 2 trains of main feedwater and booster pumps, and secondary side cooling[6]	Design Basis, Ref. 6-4
		OR	
	TRA-OK2 LSP-OK2	1 out of 2 startup feedwater pumps and secondary side cooling[6]	Design Basis
		OR	
	TRA-OK3 LSP-OK3 SBO-OK1	Passive residual heat removal[7]	Design Basis, Ref. 6-4 Chapter 15
		OR	
	TRA-OK4 LSP-OK4	Reactor coolant pump trip, 1 out of 2 core makeup tanks, full or partial RCS depressurization[8,12], 1 out of 2 normal residual heat removal pumps[9], 1 out of 4 containment water recirculation valves[11]	Reference 6-5, PRA Appendix A
		OR	

Table 6-2 (Sheet 3 of 9)

SUMMARY OF SUCCESS CRITERIA FOR THE MITIGATING SYSTEMS

Function/Accident Initiator	Success Sequence Identifiers	Success Criteria	Basis
• Transient (cont.)	TRA-OK5 LSP-OK5 SBO-OK2	Reactor coolant pump trip, 1 out of 2 core makeup tanks, full RCS depressurization[8], 1 out of 2 gravity injection lines, 1 out of 4 containment water recirculation valves[10] with containment isolation or 2 out of 4 containment recirculation valve s[10] without containment isolation	Reference 6-5, PRA Appendix A
		OR	
	TRA-OK6 LSP-OK6	Full or partial RCS depressurization[8,12], 1 out of 2 accumulators, 1 out of 2 normal residual heat removal pumps[9], 1 out of 4 containment water recirculation valves[11]	PRA Appendix A
		OR	
	TRA-OK7 LSP-OK7 SBO-OK3	Full RCS depressurization[8], 1 out of 2 accumulators, 1 out of 2 gravity injection lines, 1 out of 4 containment water recirculation valves[10] with containment isolation or 2 out of 4 containment recirculation valves[10] without containment isolation	Reference 6-5 PRA Appendix A
• RCS Leak (break size smaller than 3/8")	RLK-OK1	1 out of 2 chemical and volume control system pumps and controlled plant shutdown[13]	Design Basis Reference 6-5
		OR	
	SLO-OK (all)	any small loss of coolant accident criterion	PRA Appendix A

Table 6-2 (Sheet 4 of 9)

SUMMARY OF SUCCESS CRITERIA FOR THE MITIGATING SYSTEMS

Function/Accident Initiator	Success Sequence Identifiers	Success Criteria	Basis
• Small loss of coolant accident (break sizes between 3/8" and 2")	SLO-OK1	Reactor coolant pump trip, 1 out of 2 core makeup tanks, full or partial RCS depressurization[8,12], 1 out of 2 normal residual heat removal pumps[9], 1 out of 4 containment water recirculation valves[11]	Reference 6-5, PRA Appendix A
		OR	
	SLO-OK2	Reactor coolant pump trip, 1 out of 2 core makeup tanks, full RCS depressurization[8], 1 out of 2 gravity injection lines, 1 out of 4 containment water recirculation valves[10] with containment isolation or 2 out of 4 containment recirculation valves[10] without containment isolation	Reference 6-5, PRA Appendix A
	SLO-OK3	**OR** Partial RCS depressurization[12], 1 out of 2 accumulators, 1 out of 2 normal residual heat removal pumps[9], 1 out of 4 containment water recirculation valves[11]	PRA Appendix A
		OR	
	SLO-OK4	Full RCS depressurization[8], 1 out of 2 accumulators, 1 out of 2 gravity injection lines, 1 out of 4 containment water recirculation valves[10] with containment isolation or 2 out of 4 containment recirculation valves[10] without containment isolation	Reference 6-5, PRA Appendix A
		OR	
	SLO-OK3	Partial RCS depressurization[12], 1 out of 2 accumulators, 1 out of 2 normal residual heat removal pumps[9], 1 out of 4 containment water recirculation valves[11]	PRA Appendix A

Table 6-2 (Sheet 5 of 9)

SUMMARY OF SUCCESS CRITERIA FOR THE MITIGATING SYSTEMS

Function/Accident Initiator	Success Sequence Identifiers	Success Criteria	Basis
• Medium loss of coolant accident (break sizes between 2" and 9")	MLO-OK1 MLO-OK4	Reactor coolant pump trip, 1 out of 2 core makeup tanks, full or partial RCS depressurization[8,12], 1 out of 2 normal residual heat removal pumps[9], 1 out of 4 containment water recirculation valves[11] **OR**	Reference 6-5, PRA Appendix A
	MLO-OK2 MLO-OK3	Reactor coolant pump trip, 1 out of 2 core makeup tanks, full RCS depressurization[8], 1 out of 2 gravity injection lines, 1 out of 4 containment water recirculation valves[10] with containment isolation or 2 out of 4 containment recirculation valves[10] without containment isolation **OR**	Reference 6-5, PRA Appendix A
	MLO-OK5 MLO-OK8	PRHR, full or partial RCS depressurization[8,12], 1 out of 2 accumulators, 1 out of 2 normal residual heat removal pumps[9], 1 out of 4 containment water recirculation valves[11] **OR**	PRA Appendix A
	MLO-OK6 MLO-OK7	PRHR, full RCS depressurization[8], 1 out of 2 accumulators, 1 out of 2 gravity injection lines, 1 out of 4 containment water recirculation valves[10] with containment isolation or 2 out of 4 containment recirculation valves[10] without containment isolation	Reference 6-5, PRA Appendix A

Table 6-2 (Sheet 6 of 9)

SUMMARY OF SUCCESS CRITERIA FOR THE MITIGATING SYSTEMS

Function/Accident Initiator	Success Sequence Identifiers	Success Criteria	Basis
• CMT line break	CMT-OK1 CMT-OK4	Reactor coolant pump trip, 1 out of 1 core makeup tanks, full or partial RCS depressurization[8,12], 1 out of 2 normal residual heat removal pumps[9], 1 out of 4 containment water recirculation valves[11] **OR**	Reference 6-5, PRA Appendix A
	CMT-OK2 CMT-OK3	Reactor coolant pump trip, 1 out of 1 core makeup tanks, full RCS depressurization[8], 1 out of 2 gravity injection lines, 1 out of 4 containment water recirculation valves[10] with containment isolation or 2 out of 4 containment recirculation valves[10] without containment isolation **OR**	Reference 6-5, PRA Appendix A
	CMT-OK5 CMT-OK8	PRHR, full or partial RCS depressurization[8,12], 1 out of 2 accumulators, 1 out of 2 normal residual heat removal pumps[9], 1 out of 4 containment water recirculation valves[11] **OR**	PRA Appendix A
	CMT-OK6 CMT-OK7	PRHR, full RCS depressurization[8], 1 out of 2 accumulators, 1 out of 2 gravity injection lines, 1 out of 4 containment water recirculation valves[10] with containment isolation or 2 out of 4 containment recirculation valves[10] without containment isolation	Reference 6-5, PRA Appendix A

Table 6-2 (Sheet 7 of 9)

SUMMARY OF SUCCESS CRITERIA FOR THE MITIGATING SYSTEMS

Function/Accident Initiator	Success Sequence Identifiers	Success Criteria	Basis
• SI line break	SIL-OK1	Reactor coolant pump trip, 1 out of 1 core makeup tanks, full RCS depressurization[8], 1 out of 1 gravity injection lines, 1 out of 4 containment water recirculation valves[10] with containment isolation or 2 out of 4 containment recirculation valves[10] without containment isolation **OR**	Reference 6-5, PRA Appendix A
	SIL-OK2	PRHR, full RCS depressurization[8], 1 out of 1 accumulators, 1 out of 1 gravity injection lines, 1 out of 4 containment water recirculation valves[10] with containment isolation or 2 out of 4 containment recirculation valves[10] without containment isolation	Reference 6-5, PRA Appendix A
• Spurious ADS	LLO-OK1 LLO-OK2	1 out of 2 accumulators, 1 out of 2 core makeup tanks[18] 1 out of 2 gravity injection lines, 1 out of 4 containment water recirculation valves valves[10] with containment isolation or 2 out of 4 containment recirculation valves[10] without containment isolation	PRA Appendix A
• Large loss of coolant accident (break size greater than 9")	LLO-OK1 LLO-OK2	2 out of 2 accumulators, 1 out of 2 core makeup tanks[18] 1 out of 2 gravity injection lines, 1 out of 4 containment water recirculation valves valves[10] with containment isolation or 2 out of 4 containment recirculation valves[10] without containment isolation	Design Basis, Reference 6-4 Chapter 15 (LLOCA) short term, PRA Appendix A (long term)

Table 6-2 (Sheet 8 of 9)

SUMMARY OF SUCCESS CRITERIA FOR THE MITIGATING SYSTEMS

Function/Accident Initiator	Success Sequence Identifiers	Success Criteria	Basis
• Interfacing systems loss of coolant accident[14]	(None Modeled)	Break isolation and any transient criterion **OR** Large loss of coolant accident criterion	---
• Steam generator tube rupture	SGR-OK1	Isolation of ruptured steam generator, 1 out of 2 chemical & volume control system makeup pumps, secondary cooling from intact steam generator, and reactor coolant system depressurization via either pressurizer auxiliary spray or 1 of 2 automatic depressurization system Stage 1 valves[15] **OR**	Design Basis
	SGR-OK2	Isolation of main steam flow from both steam generators, steam generator overfill protection, reclosure of any open atmospheric relief valves on the steamline from the ruptured steam generator, reactor coolant pump trip, injection from 1 out of 2 CMTs, and operation of PRHR HX [15] **OR**	Reference 6-5
	SGR-OK (3-6)	Any small loss of coolant accident criterion[16]	PRA Appendix A

Table 6-2 (Sheet 9 of 9)

SUMMARY OF SUCCESS CRITERIA FOR THE MITIGATING SYSTEMS

Function/Accident Initiator	Success Sequence Identifiers	Success Criteria	Basis
Containment Heat Removal			
• All initiating events	(all)	1 out of 3 PCS drain valves **OR** PCA air cooling [17]	Reference 6-4 Chapter 6 PRA Appendix A
• Sequences where RNS is operable	*	1 out of 2 RNS pumps/HXs and CCW cooling to RNS HXs **OR** 1 out of 3 PCS drain valves **OR** PCA air cooling [17]	Design Basis Reference 6-4 Chapter 6 PRA Appendix A
Containment Integrity for Containment Recirculation			
• All initiating events which require gravity injection of IRWST	(all)	1 out of 4 containment recirculation valves are required if containment isolation is successful; with failure of containment isolation, 2 out of 4 containment recirculation valves are required[18]	PRA Appendix A

*Too many to list

Notes to Table 6-2:

1. Successful reactor trip is the release and insertion, by gravity, into the core of the control rods, either automatically or manually, with failure of no more than four rod cluster control assemblies (RCCAs) to insert. Control rod release and gravity insertion is achieved by automatic or manual actuation of reactor trip via the protection and safety monitoring system (PMS) or by automatic or manual actuation of RCCA motor-generator set de-energization via the diverse actuation system (DAS). Either of these actions causes the removal of power from the RCCA gripper coils, causing the rods to fall into the core. In the unlikely failure of insertion of multiple (more than 4) RCCAs, RCS boration may be required within 24 hours to ensure long-term shutdown.

   Also see note 2 regarding use of manual actuation of RCCA insertion via the rod control system in order to avoid RCS pressure in excess of stress limits.

2. Turbine trip serves to "bottle up" the steam generator, thereby reducing the secondary system heat removal rate, and producing a more rapid reactor coolant system heatup. The result of the RCS heatup is increased reactivity feedback that produces a more rapid reduction in core power. Turbine trip via diverse actuation system operation, as well as the opening of the pressurizer safety valves for overpressure control, is not required if the event is initiated at initial power levels below approximately 25% (Reference 6-3).

   Even if reactor trip fails during the beginning of core life, opening of both pressurizer safety valves will be adequate to limit RCS pressure to the ASME Boiler & Pressure Vessel Code (Reference 6-2) service level C stress limit (3200 psig for Westinghouse PWRs, per Reference 6-3). This capability is a result of the low-boron core used in the AP1000.

   The PRA event tree models assume that if pressure relief fails, the result is rupture of an RCS component leading to a large LOCA with core damage.

3. If reactor trip fails but pressure relief was adequate to keep RCS pressure below 3200 psig, then RCS boration, initiated either automatically via core makeup tank actuation, or manually via the chemical and volume control system, is adequate to provide reactor shutdown.

   For cooldown events, such as main steamline break, boration via either chemical and volume control system or core makeup tank may be needed following reactor trip. This is to ensure shutdown following any limited return to power, which might occur under worst-case conditions due to the cooling effect of the secondary mass and energy release on the primary coolant.

4. Reactor trip is not required for large LOCAs (Reference 6-4 DCD Chapter 15) due to the intrinsic reactor shutdown due to the large creation of voids and the injection of borated water from the accumulators and the IRWST.

5. Depending on the initiating event and subsequent success of failure of mitigating systems, pressurizer safety valves and/or steam generator safety valves and steam generator power-operated relief valves may open to relieve primary side (and secondary side) pressure. If the reactor has tripped, the primary pressure will not reach the service level C stress limit (3200 psig) even if the pressurizer safety valves fail to open. If secondary side heat removal, or PRHR, operate, opening of the pressurizer safety valves is not anticipated.

6. Steam generator cooling requires a source of cooling water (main or startup feedwater supplied from either the deaerator storage tank fed by the condenser, if available following reactor trip, or the condensate storage tank) and a steam relief path.

Use of main feedwater requires availability of the condenser and condensate supply (1 out of 3 condensate pumps supplying the deaerator storage tank), and operation of the feedwater flow control valves (to throttle flow to the steam generators following reactor trip). Startup feedwater does not require condenser availability, since it is aligned to the condensate storage tank. By design, the condensate storage tank provides adequate inventory for decay heat removal by the startup feedwater system for 24 hours after reactor trip.

The steam relief path can be to the condenser using the steam dump (turbine bypass) valves (6 valves), or to atmosphere using the steam generator power-operated relief valves (one per steam line) and safety valves (three per steam line). Use of steam dump maintains condenser inventory; operation of 1 out of 2 circulating water pumps is also required.

7. The IRWST provides sufficient inventory for decay heat removal for more than 72 hours (Reference 6-4, Section 15.2.6) with operation of the IRWST gutter valves.

8. Full RCS depressurization is defined as depressurization sufficient to allow gravity injection from the IRWST.

   Stages 1, 2, and 3 of ADS are automatically actuated (in a staged manner, following a defined time sequence) on low CMT level. Stage 4 of ADS, and the squib valves on the IRWST gravity injection lines, are actuated on low-low CMT level. For all cases where CMT injection succeeds, automatic actuation of ADS with manual backup actuation are credited. Where CMT injection fails, only manual ADS actuation is credited. The operator can manually initiate stage 1, 2, 3 operation via the plant protection and monitoring system (PMS), and can also manually initiate stage 4 operation via the diverse actuation system (DAS). In addition, the operator can selectively actuate and subsequently isolate any individual ADS valve. Similarly, for cases where CMT injection succeeds, automatic IRWST gravity injection actuation is credited; where CMT injection fails, only manual IRWST gravity injection is credited. (Also see note 19.)

   For events other than large LOCA, successful CMT injection is assumed to require trip of all four reactor coolant pumps in order to allow sufficient RCS voiding to allow the CMT inventory to drain into the RCS. For large LOCAs, the voiding due to the break makes trip of the RCPs unnecessary for successful injection. For any event, if the RCPs fail to trip but depressurization is accomplished either via the break or by manual actuation of the stage 4 ADS valves, the RCS will depressurize sufficiently that the CMTs will inject.

   The PRA models require the following depressurization line configurations (i.e., control and associated isolation valve open) for full RCS depressurization (Reference Appendix A):

   For transients, including loss of offsite power and secondary side breaks, with successful CMT injection:

   - 3 out of 4 lines of ADS stage four, with 1 out of 4 lines of stage 2 or 3 to reduce RCS pressure to below the stage 4 automatic pressure interlock setpoint (manual stage 4 does not require stages and 3)

   For transients without CMT injection:

   - 3 out of 4 lines of ADS stage four, manually actuated

   For small LOCA, including RCS leak and tube ruptures, with CMT injection and with PRHR available to reduce RCS pressure to below the stage 4 automatic pressure interlock setpoint:

   - 3 out of 4 lines of ADS stage four

For small LOCA, including RCS leak and tube ruptures, with CMT injection but with PRHR not available:

- 3 out of 4 lines of ADS stage four, with 1 out of 4 lines of stage or 2 or 3 to reduce RCS pressure to below the stage 4 automatic pressure interlock setpoint (manual stage 4 does not require stages 2 and 3)

For small LOCA, including RCS leak and tube ruptures, without CMT injection:

- 3 out of 4 lines of ADS stage four, manually actuated

Full depressurization for medium loss of coolant accidents, with CMT injection, is achieved with the following depressurization valves configuration; PRHR operation is not required since the break provides sufficient depressurization to reach the stage 4 automatic pressure interlock:

- 3 out of 4 lines of ADS stage four.

For medium LOCAs, without CMT injection:

- 3 out of 4 lines of ADS stage four, manually actuated, with PRHR operation to provide time for operator action

For large LOCAs, accumulator injection is required. In addition, there is not sufficient time for the operators to manually actuate ADS 4 or the IRWST injection lines, so CMT injection is required to provide these actuation signals.

- 3 out of 4 lines of ADS stage four

9. Normal residual heat removal system operating in injection mode (once RCS pressure drops below approximately 100 psig), configured with 1 out of 2 pumps taking suction from the spent fuel cask loading pit and discharging into 1 out of 2 direct vessel injection lines. (Also see note 11.)

10. Two recirculation suction paths, each consisting of a sump screen and two parallel suction lines, are provided to return coolant to the reactor vessel through one of two vessel injection lines when the IRWST reaches a preset low level, or if the fourth stage of ADS is open. Opening of ADS stage 4 allows IRWST injection into the RCS. One of the parallel lines in each suction path has a check valve and a squib valve in series, and the second line has a normally open motor-operated valve and a squib valve in series. The opening of 1 out of the 4 flow paths is necessary to allow the water in the containment sump to be returned to the reactor vessel via natural circulation as long as containment isolation is successful. If containment isolation is unsuccessful, then 2 of the 4 flow paths are required.

    One out of two open injection lines is also required, although the injection line need not be the one normally associated with the open suction path. This is because the flood level after IRWST injection is above the bottom of the IRWST, resulting in a flowpath through any open recirculation line through the IRWST and into either open vessel injection line. (Also see note 11.)

11. With successful RNS injection, long term cooling is provided via continued operation of one RNS pump to recirculate water from the containment back into the RCS. The configuration of normal residual heat removal for short-term core cooling may lead to different success criteria than stated in note 10 for long-term water recirculation to the reactor vessel. If both RNS pumps operate, the flow through one recirculation valve path does not provide sufficient suction flow. Therefore, success with two RNS pumps running requires either opening 2 out of the 4 valve paths or throttling the RNS discharge valve in order to match pump suction and

discharge conditions. Because the success criterion for NRHR is one of two pumps, it is possible that the fourth stage ADS valves will open. However, the condition of either one or two RNS pumps operating and recirculating is covered in the models.

12. Partial RCS depressurization is defined as depressurization sufficient to allow RNS operation but not gravity injection from the IRWST.

    Stages 1, 2, and 3 of ADS are automatically actuated (in a staged manner, following a defined time sequence) on low CMT level. For all cases where CMT injection succeeds, automatic actuation of ADS with manual backup actuation are credited. Where CMT injection fails, only manual ADS actuation is credited. The operator can manually initiate stage 1, 2, 3 operation via the plant protection and monitoring system (PMS), and can also manually initiate stage 4 operation via the diverse actuation system (DAS). In addition, the operator can selectively actuate and subsequently isolate any individual ADS valve.

    In the PRA, no credit is taken for the relieving capacity of the stage 1 ADS valves, except for a single case used for steam generator tube rupture. The PRA models require the following depressurization line configurations (i.e., control and associated isolation valve open) for partial RCS depressurization (Appendix A):

    For transients, including loss of offsite power and secondary side breaks, with successful CMT injection:

    - 2 out of 4 lines of stages 2 or 3 OR 1 out of 4 lines of stage 4

    For transients, including loss of offsite power and secondary side breaks, without CMT injection:

    - 2 out of 4 lines of stages 2, 3, OR 1 out of 4 lines of stage 4, manually actuated

    For small LOCA, including RCS leak and tube ruptures, with CMT injection and with PRHR available to reduce RCS pressure to below the stage 4 automatic pressure interlock setpoint:

    - 2 out of 4 lines of stages 2, 3, OR 1 out of 4 lines of stage 4, automatic or manual actuations

    For small LOCA, including RCS leak and tube ruptures, with CMT injection but with PRHR not available:

    - 2 out of 4 lines of stages 2 or 3 OR 1 out of 4 lines of stage 4

    For small LOCA, including RCS leak and tube ruptures, without CMT injection but with PRHR available:

    - 2 out of 4 lines of stages 2 or 3, OR 1 out of 4 lines of stage 4, manually actuated

    For small LOCA, including RCS leak and tube ruptures, without CMT injection and without PRHR:

    - 2 out of 4 lines of stages 2 or 3, OR 1 out of 4 lines of stage 4, manually actuated

    For medium loss of coolant accidents with CMT injection:

    - 2 out of 4 lines of stages 2 or 3, OR 1 out of 4 lines of stage 4

For medium loss of coolant accidents without CMT injection:

- 2 out of 4 lines of stages 2 or 3, OR 1 out of 4 lines of stage 4, manually actuated, with PRHR operation to provide time for operator action

13. The actuation of one pump of the chemical and volume control system can prevent core uncovery for break sizes up to 2", but cannot prevent potential automatic ADS actuation for break sizes above 3/8". If ADS actuation occurs, the sequence is not considered terminated because core cooling at low pressure has to be addressed. If depressurization fails and passive residual heat removal is actuated, the reactor coolant system pressure is reduced to a level such that loss of coolant inventory is stopped. Decay heat removal by the PRHR system leads to a successful configuration.

14. Although success is possible and anticipated, success paths have not been modeled for interfacing systems LOCA.

15. Successful mitigation of a steam generator tube rupture can be achieved in several ways. One way is for the operators to isolate the ruptured steam generator, cool down the RCS, and then depressurize the RCS to equalize primary and secondary side pressures (thereby stopping the leak). RCS depressurization can be accomplished by manually aligning the chemical and volume control system for auxiliary pressurizer spray, and cooldown can be accomplished using the intact steam generator, supplied with startup feedwater. If the ruptured steam generator is not isolated in time (or if there is excessive flow from the CVS or startup feedwater), but the turbine has tripped, manual or automatic actuation of steam generator overfill protection (isolation of the chemical and volume control system pumps and isolation of startup feedwater) prevents both steam generator overfilling and subsequent potential problems in the secondary side (e.g., power-operated relief valve or safety valve stuck open, failure of main steam line). PRHR operation provides decay heat removal and subsequent RCS cooldown and depressurization and termination of the leak.

16. For a steam generator tube rupture event that occurs as a consequence of a main steam line break or main steam line safety valves sticking open, the success criteria are the same as those considered for the small loss of coolant accident.

17. The external containment water system (passive containment cooling system water) is not required to keep the containment pressure below the ultimate containment pressure; heat transfer through the containment shell to the outside air is sufficient, although the containment design pressure may be exceeded.

    Containment integrity (containment isolation) is not required to prevent core damage (see also note 18). Sufficient water is retained in the containment sump for continued recirculation core cooling even with a containment opening above the sump level allowing evaporation loss of water in the sump. There are no credible pathways for draining of sump liquid.

    Containment integrity does affect the number of passive containment water recirculation flow paths required. 1 out of 4 are required if containment isolation is successful and 2 out of 4 are required if containment isolation is not successful.

18. The IRWST gravity injection line squib valves are automatically actuated on low-low CMT water level (the same signal that actuates ADS stage 4). Therefore, automatic actuation of IRWST gravity injection requires draindown of either CMT. Manual actuation of the squib valves is also possible, if sufficient time is available for operator action. Sufficient time is available for most events, with the possible exception of very large LOCAs.

Table 6-3 (Sheet 1 of 4)

SUMMARY OF SUCCESS CRITERIA FOR OPERATOR ACTIONS AND MISSION TIMES

Operator Action Identifier	Operator Action Description/Where Performed	Used in Event Tree Cases	Available Operator Response Time (Minutes)	Reference/ Basis
ADF-MAN01	Depressurize RCS to equalize primary and secondary side pressures during SGTR, using first stage ADS valves/In control room	ADF	>30	O, E
ADN-MAN01	Actuate ADS given failure of automatic actuation/In control room	AD1, AD1A, ADA, ADAB, ADAL, ADB, ADL, ADM, ADQ, ADR, ADRA, ADS, ADT, ADU, ADUM, ADV, ADW, ADZ	(Timing consistent with associated recognition action - LPM-MAN 01/2)	A A, E
ADN-REC01	Complete ADS actuation (action ADM-MAN01 recovery)/ In control room	ADQLT, ADTLT	>30	O, E
ATW-MAN01	Actuate RCCA control system to drive in control rods/In control room	RTSTP	1	S
ATW-MAN03	Recognize ATWS and trip reactor using PMS (loss of feedwater)/ In control room	RTPMS	1	O, E
ATW-MAN04	Recognize ATWS and trip reactor using DAS (loss of feedwater)/ In control room	DAS	1	O, E
ATW-MAN05	Recognize ATWS and trip reactor using PMS (feedwater available)/ In control room	RTPMS1	10	O, E
ATW-MAN06	Recognize ATWS and trip reactor using PMS (feedwater available)/ In control room	DAS1	10	O, E
ATW-MAN11	Recognize ATWS and initiate RCS emergency boration/In control room	CSBOR1	>60	O, E
CIA-MAN01	Identify failed steam generator and close MSIVs following steamline break/In control room	CIA	10	O, E
CIB-MAN00	Diagnose steam generator tube rupture/In control room	CIB, CSAX, COND1	>30	O, E
CIB-MAN01	Identify and isolate faulted steam generator following SGTR/In control room	CIB	>30	O, E

Table 6-3 (Sheet 2 of 4)

SUMMARY OF SUCCESS CRITERIA FOR OPERATOR ACTIONS AND MISSION TIMES

Operator Action Identifier	Operator Action Description/Where Performed	Used in Event Tree Cases	Available Operator Response Time (Minutes)	Reference/ Basis
CIC-MAN01	Isolate containment following core damage/In control room	CIC	120 (except LLOCA pre-core damage)	O, E
CMN-MAN01	Actuate CMTs if automatic actuation fails/In control room	CM1A, CM2AB, CM2L, CM2P, CM2NL, CM2SL	(Timing consistent with associated recognition action - LPM-MAN01/2)	A O, E
CMN-REC01	Actuate CMT injection after core damage/In control room	CMBOTH, CM2LLT	>60 (Based on CMN-MAN01)	O, E
CVN-MAN00	Align CVS auxiliary spray for SGTR/In control room	CSAX	30	O, E
CVN-MAN02	Align CVS boration following ATWS/In control room	CSBOR1	60	O, E
CVN-MAN03	Start CVS standby pump if aligned pump fails/In control room	CVS1, CSP	30	A, E
DUMP-MAN01	Control steam dump during SGTR/ In control room	COND1	>30	A, E
FWN-MAN02	Start startup feedwater pumps if automatic actuation fails/In control room	SFW, SFW1, SFWM, SFWT	>30	O, E
FWN-MAN03	Start startup feedwater pumps if automatic actuation fails (LOOP)/ In control room	SFWP	30	O, E
HPM-MAN01	Recognize need for high pressure decay heat removal/In control room	PRL, PRP, PRS, PRT, SFW, SFW1, SFWM, SFWP, SFWT	30	A, O, E
LPM-MAN01	Recognize need for RCS depressurization/In control room	AD1, AD1A, ADA, ADR, ADS, ADT, ADZ, ADV, ADW, CM2AB, CM2SL	30 (Transients, SLOCA)	A, E
LPM-MAN02	Recognize need for RCS depressurization/In control room	ADQ, ADUM, ADAB, ADAL, ADB, ADM, ADR, ADRA, ADU, CM1A, CM2L, CM2NL, CM2P	20	A, E

Table 6-3 (Sheet 3 of 4)

SUMMARY OF SUCCESS CRITERIA FOR OPERATOR ACTIONS AND MISSION TIMES

Operator Action Identifier	Operator Action Description/Where Performed	Used in Event Tree Cases	Available Operator Response Time (Minutes)	Reference/ Basis
LPM-REC01	Recognize need for RCS depressurization following core damage/In control room	ADQLT, ADTLT, CMBOTH, CM2LLT	>30 (Based on LPM-MAN01)	O, E
PCN-MAN01	Recognize need and actuate passive containment cooling water/ In control room	PCT	>120	E
PRI-MAN01	Recognize and isolate ruptured PRHR heat exchanger/In control room	PRI	>30	E, A
PRN-MAN01	Actuate PRHR heat removal (transient)/In control room	PRT	30	A, E
PRN-MAN02	Actuate PRHR heat removal (LOCA or LOOP)/In control room	PRL, PRP, PRS	30	A, E
PRN-MAN03	Control (stop/restart) PRHR heat removal (SLB)/In control room	CSP	>30 (initial actions)	O, E
RCN-MAN01	Trip all reactor coolant pumps if automatic trip fails/In control room	RCL, RCT, RCN	(Consistent with CMT actuation timing)	A, O, E
REC-MANDAS	Recognize need and manually actuate DAS/In control room	(All cases with PMS and DAS actuation where credit is taken for operator action)	(Consistent with timing for related PMS actuation actions)	D, E
REG-MAN00	Regulate startup feedwater following loss of air/Outside control room	SFW, SFW1, SFWM, SFWP, SFWT	>30	O, E
REN-MAN02	Recognize need and open containment recirculation valves/ In control room	RECIRB, RECIRC, RECIRP, RNP, RNR	>60	A, O, E
REN-MAN03	Recognize need and open containment recirculation valves after core damage/In control room	IWF	>120	E
REN-MAN04	Recognize need and open containment recirculation valves given failure of IRWST low level signal	RECIRB, RECIRC, RECIRP, RNP, RNR	60	A, O, E

Table 6-3 (Sheet 4 of 4)

SUMMARY OF SUCCESS CRITERIA FOR OPERATOR ACTIONS AND MISSION TIMES

Operator Action Identifier	Operator Action Description/Where Performed	Used in Event Tree Cases	Available Operator Response Time (Minutes)	Reference/ Basis
RHN-MAN01	Align RNS after depressurization/ In control room	RNP, RNR	10	A, E
RMN-MAN06	Recognize need and throttle RNS pump discharge valve if two RNS pumps are running with only one recirculation path available/ In control room	RECIRB, RECIRC, RECIRP, RNP, RNR	>30	E
RTN-MAN01	Perform controlled shutdown of the reactor	SDMAN	>60	E, O
SGHL-MAN01	Recognize need and actuate steam generator overfill protection/ In control room	SGHL	>30	O, E
VLN-MAN01	Recognize need and actuate containment hydrogen control system/In control room	VLH	>120	E
ZON-MAN01	Recognize need and start standby diesel generator/In control room	DGEN	>30	0

CHAPTER 8

PASSIVE CORE COOLING SYSTEM – PASSIVE RESIDUAL HEAT REMOVAL

8.1 System Function

The passive residual heat removal (PRHR) system provides emergency core decay heat removal during transients, accidents, or whenever the normal heat removal paths via the steam generators are lost.

8.2 System Description

The PRHR system, a subsystem of the passive core cooling system (PXS), is a Seismic Category 1, safety-related system. It consists of one PRHR heat exchanger and associated valves, piping and instrumentation. The heat exchanger is located in the in-containment refueling water storage tank (IRWST), which provides the heat sink. The heat exchanger is maintained full of cold reactor coolant system (RCS) coolant at full RCS pressure. The heat exchanger connects to the RCS by an inlet line from one RCS hot leg through a tee from one of the fourth stage automatic depressurization lines. The outlet line from the PRHR heat exchanger to the RCS cold leg has two parallel, normally closed, air-operated flow control valves that fail open upon loss of air pressure or on control actuation signal. The heat exchanger inlet line contains a normally open motor-operated isolation valve that connects to the upper PRHR heat exchanger channel head. The heat exchanger is elevated above the RCS loops to induce natural circulation flow when the RCS pumps are not available.

The IRWST gutter circumnavigates the containment shell. The purpose of the gutter is to collect condensed water on the containment shell and, in the event of PRHR actuation, return the water to the IRWST. Under normal operating conditions, air-operated valves PXS-V130A and PXS-V130B are open and the gutter sends excess condensate to the liquid radwaste system (WLS) containment sump MT 02. During events with PRHR actuation, the air-operated valves close to shut off access to the waste sump. Thus, water is returned to the IRWST, allowing the PRHR heat exchanger to remain submerged in water. See subsection 8.5.1 for failure positions of PRHR air-operated valves.

A simplified PRHR system piping and instrumentation (P&ID) is provided in Figure 8-1.

8.2.1 Support Systems

The motor-operated valve, PXS-V101, is normally open. It requires 125 vdc Class 1E power supply to close to provide remote isolation in case of excessive PRHR heat exchanger leakage.

Air-operated valves PXS-V108A and PXS-V108B are normally closed. They require both an air supply (compressed air system) and 125 vdc Class 1E control power to remain closed. Loss of air supply or loss of 125 vdc Class 1E control power will result in valves opening. Actuation signals are provided by the protection and monitoring system (PMS) and the diverse actuation system (DAS).

Air-operated valves PXS-V130A and PXS-V130B are normally open. They require both an air supply (compressed air system) and 125 vdc Class 1E control power to remain opened. Loss of air supply or loss of 125-vdc Class 1E control power will result in valves closing. The PMS and the DAS provide the actuation signals.

Supporting systems for PRHR operation are detailed in Table 8-3.

8.2.2 Instrumentation and Control

Operation of the PRHR system is automatically initiated upon receipt of any of the following signals:

- PMS – low steam generator level (two out of four narrow-range per steam generator) coincident with low startup feedwater flow to any steam generator (one out of two per steam generator)
- PMS and DAS – low steam generator level (one out of two wide range per steam generator)
- PMS – core makeup tank system actuation
- PMS – automatic RCS first stage depressurization actuation
- PMS – high pressurizer level
- DAS – high hot leg temperature
- PMS and DAS manual actuation (different switches)

The actuation signals open the normally closed air-operated valves on the common outlet line and the normally open air-operated valves on the IRWST gutter/waste sump line.

A simplified PRHR valve control system diagram is shown in Figure 8-2.

8.2.3 Test and Maintenance

Testing, maintenance, and surveillance of the components in the PRHR system are conducted quarterly and flow tested every two years. Air-operated valves PXS-V108A and PXS-V108B are cycled quarterly, during power operation, by closing motor-operated valve PXS-V101. Air-operated valves PXS-V130A and PXS-V130B are cycled quarterly, during power operation. For maintenance, motor-operated valve PXS-V101 and manual valve PXS-V109 are closed. After maintenance, the system valves are realigned and valves PXS-V101 and PXS-V109 are opened. Motor-operated valve PXS-V101 is cycled quarterly, when testing air-operated valves PXS-V108A and PXS-V108B.

The expected frequency of testing for the PRHR system components, as assumed in the analysis, is reported in Table 8-4.

Table 8-5 describes the expected frequency of component maintenance.

8.3 System Operation

During normal operation, the PRHR heat exchanger is submerged in the IRWST. It is full of cold RCS coolant at full RCS pressure. The line from the PRHR heat exchanger to the cold leg is blocked by two normally closed, fail open, parallel air-operated flow control valves (V108A/B). The line from RCS loop #1 hot leg to the top of the PRHR heat exchangers is normally open.

8.4 Performance During Accident Conditions

8.4.1 Plant Shutdown

Following a plant shutdown or trip, no PRHR actuation occurs as long as normal RCS heat removal via the steam generators with feedwater from the startup feedwater system (SFW), and inventory control from the chemical and volume control system (CVS) are maintained.

If the steam generators are unavailable for heat removal, due to loss of main and startup feedwater capability, then the PRHR heat exchanger is actuated by a low narrow range steam generator level coincident with low (SFW) flow signal. The actuation signal automatically opens the normally closed, air-operated valves in the line from the PRHR heat exchanger to the RCS cold leg (V108A/B). The same actuation signal automatically closes the normally open, air-operated valves in the line from the IRWST gutter to the waste sump (V130A/B). The PRHR heat exchanger transfers heat from the RCS to the water contained in the IRWST by circulation of RCS fluid from the RCS hot leg to the cold leg side of the steam generator channel head. The water in the IRWST provides a large heat sink that acts to delay direct steaming to the containment for more than one hour. Following transients with RCS pumps trip, the PRHR operates under natural circulation flow conditions.

8.4.2 Loss of Coolant Accidents

Following a postulated small loss of coolant accident (LOCA), the RCS pressure decreases and initiates a reactor trip and safeguards actuation signal. The PRHR is actuated and allows for steam condensation inside the heat exchangers.

8.4.3 Passive Residual Heat Removal Heat Exchanger Tube Rupture

Following a postulated leak or rupture of the PRHR heat exchanger tube during normal operation, isolation of the system is required to prevent decrease of the RCS coolant inventory. In case of a small leak, the PRHR temperature instrumentation is used to indicate that a leak in the heat exchanger exists. The heat exchanger can then be isolated using the isolation valves (motor-operated valve (V101) on the inlet line and air-operated and manual valves on the outlet line (V108A/B)). Plant shutdown is required if PRHR is not available.

In case of a developing leak or a circumferential heat exchanger 3/4-inch tube rupture, the event progression is the same as the case of a small LOCA. Continuous operation of the chemical and volume control system provides the RCS inventory makeup, giving the operator

ample time to isolate the PRHR system by remotely closing the motor-operated valve on the heat exchanger inlet line and reclosing the air-operated outlet valves if they automatically open during the accident progression (modeled in the PRI fault tree – operator action PRI-MAN01). The heat exchanger can then be isolated by closing the locally operated manual valve on the outlet line. Plant shutdown is required if PRHR is not available. Otherwise, the event is routed to the loss of feedwater event tree with a PRHR system unavailable. If the PRHR isolation should fail, the event is same as a small LOCA with PRHR unavailable.

8.5 Initiating Events Review

8.5.1 Initiating Events Impacting the PRHR System

The PRHR system is a passive, safety-related system that can perform its function without relying on support systems. Air-operated valves on the parallel outlet lines fail open upon loss of instrument air or loss of control power. Normally open motor-operated valves on the inlet lines fail "as is" upon loss of control or motive power. Air-operated valves on the IRWST gutter/waste sump line fail closed upon loss of instrument air or loss of control power.

8.5.2 Initiating Events Caused by PRHR System Malfunction

As described in Section 8.4, the PRHR heat exchanger, although in standby during normal plant operations, is maintained under full RCS pressure; therefore, a leak or rupture of a PRHR heat exchanger tube can occur. A specific event tree is constructed to consider the plant response if this initiating event should take place. A fault tree (PRI) modeling isolation of the system is constructed and analyzed.

The inadvertent actuation of the PRHR heat exchanger during full power operation due to actuation failure, loss of control power, or loss of instrument air is classified as a Condition II event. Fifteen minutes after an inadvertent actuation, the plant will be in a safe, stable condition, with the reactor tripped. The PRHR heat exchanger will be removing decay heat, and the core makeup tanks will be actuated. Standard plant procedures are then used to either return to power operations, or to cool down the plant using non safety-related auxiliary systems. Therefore, this event does not challenge plant safety and is not modeled in the PRA analysis.

8.6 System Logic Models

This section presents the logic models used for quantification of system performance under various conditions. Each model depicts the system, given an initiating event. The top event logic for each model is defined by the success criteria, which are directly related to the initiator.

8.6.1 Assumptions and Boundary Conditions

The following assumptions and boundary conditions are used in the development of the fault trees for the PRHR system:

- Level alarms exist in the IRWST to alert the operator of low IRWST water levels. These alarms help prevent the PRHR heat exchanger from becoming uncovered.

- The motor-operated isolation valve (PXS-V101) on the PRHR inlet line is a normally open valve that also receives a confirmatory signal to open. Valve misposition is not considered. The valve fails "as is" and is not modeled, except for the PRHR tube rupture initiating event, when it is required to close (fault tree PRI).

- The success criteria for PRHR requires the PRHR heat exchanger to operate, at least one out of two parallel air-operated valves on the PRHR heat exchanger outlet line to open, and at least one out of two series air-operated valves on the IRWST gutter/waste sump line to close.

- Air-operated valves PXS-V108A and PXS-V108B fail open upon loss of control power or loss of instrument air. Therefore they do not require an I&C actuation signal if any of these initiating events should occur (fault tree PRW).

- Air-operated valves PXS-V130A and PXS-V130B fail closed upon loss of control power or loss of instrument air. Therefore, they do not require an I&C actuation signal if any of these initiating events should occur (fault tree PRL).

- Common-cause failure of the CMT and PRHR air-operated valves to open is conservatively considered and modeled as event PXX-AV-LA to account for failures due to possible similarities among like components in different systems used as alternative success criteria.

- Air-operated valves PXS-V108A and PXS-V108B, PXS-V130A and PXS-V130B, and motor-operated valve PXS-V101 positions are indicated and alarmed in the main control room.

- If one of the two air-operated valves PXS-V108A and PXS-V108B fails to open during test, it is repaired and put back into operation within 72 hours. If both valves fail to open, the plant is brought to shutdown. If motor-operated valve PXS-V101 fails to reopen after test, the plant is also shut down.

- The PRHR heat exchanger inlet piping design includes high point vent connections (which vent into the IRWST) with level alarms (installed in the high point vents) to prevent the accumulation of non-condensable gases in the exchanger. Accumulation of gasses in this vent will force the water level down, triggering a low level alarm.

- Common-cause failure of valves PXS-V108A&B and PXS-V130A&B is not modeled in the PRA due to differences in the failure modes of the two sets of valves.

- Four three-way solenoid valves control each of the air-operated valves (PXS-V108A&B and PXS-V130A&B). The PMS controls these solenoid valves. The failure of each solenoid valve is modeled within the failure of each air-operated valve (Figure 8-2).

- A DAS controlled, three-way solenoid valve regulates the air supply to the air-operated valves PXS-V108A&B and PXS-V130A&B. The failure of this valve is unlikely and is not modeled in the PRA (Figure 8-2).

8.6.2 Fault Tree Models

The fault trees for the system are: PRT, PRTA, PRL, PRP, PRS, PRW, and PRI. These system fault trees are shown in Appendix E.

8.6.3 Human Interactions

The following human interactions are modeled in the PRHR system fault trees:

- Failure of the operator to manually actuate valves PXS-V108A, PXS-V108B, PXS-V130A, and PXS-V130B if automatic actuation logic fails

- Failure of the operator to manually close isolation valve PXS-V101 and reclose valves PXS-V108A and PXS-V108B (if they automatically open) following a PRHR heat exchanger tube rupture event

A summary of operator actions modeled in the fault trees is reported in Table 8-6.

8.6.4 Common Cause Failures

The potential common cause failure events affecting either the PRHR system components or the components of other systems are evaluated and documented in Table 8-7.

8.7 Quantification and Results

Table 8-1 provides a list of system fault trees for the PRHR system.

Tables 8-2a through 8-2g report the fault tree success criteria.

Table 8-1

LIST OF PASSIVE RESIDUAL HEAT REMOVAL SYSTEM FAULT TREES

Fault Tree Name	Description
PRT	Failure of passive residual heat removal to remove decay heat from reactor coolant system following all transient events except loss of offsite power and loss of compressed air events
PRTA	Failure of passive residual heat removal to remove decay heat from reactor coolant system following all transient events except loss of offsite power and loss of compressed air events, without credit for manual actuation
PRL	Failure of passive residual heat removal to remove decay heat from reactor coolant system following small loss of coolant accidents
PRP	Failure of passive residual heat removal to remove decay heat from reactor coolant system following loss of offsite power event
PRS	Failure of passive residual heat removal to remove decay heat from reactor coolant system following a steam generator tube rupture event
PRW	Failure of passive residual heat removal to remove decay heat from reactor coolant system following loss of dc power and loss of compressed air events
PRI	Failure to isolate the failed passive residual heat removal heat exchanger before reactor trip is reached for the case in which chemical and volume system makeup is available

Table 8-2a

FAULT TREE "PRT" SUCCESS CRITERIA

Event description:	Failure of passive residual heat removal to remove decay heat from the reactor coolant system following transient events except loss of coolant accidents and loss of offsite power event
Success configuration:	One or both of the air-operated valves on the passive residual heat removal heat exchanger outlet to cold leg line are required to open One or both air-operated valves on the IRWST gutter/waste sump line are required to close
System initial status:	Passive residual heat removal system in standby position with air-operated valves in normal position
Mission time:	24 hours
Components required to change status:	Air-operated valves (AOVs) PXS-V108A or B: must open, and Air-operated valves PXS-V130A or B: must close
Initiating signals:	PMS – low SG level (narrow range) coincident with low SFW flow. DAS – high hot leg temperature
Operator actions:	To recognize the need for high-pressure decay heat removal following loss of main feedwater system (See basic event HPM-MAN01) To actuate passive residual heat removal air-operated valves PXS-V108A and PXS-V108B, PXS-V130A, and PXS-V130B if automatic actuation fails, given a transient (See basic event PRN-MAN01)

Table 8-2b

FAULT TREE "PRTA" SUCCESS CRITERIA

Event description:	Failure of passive residual heat removal to remove decay heat from the reactor coolant system following transient events except loss of coolant accidents and loss of offsite power event
Success configuration:	One or both of the air-operated valves on the passive residual heat removal heat exchanger outlet to cold leg line are required to open One or both air-operated valves on the IRWST gutter/waste sump line are required to close
System initial status:	Passive residual heat removal system in standby position with air-operated valves in normal position
Mission time:	24 hours
Components required to change status:	Air-operated valves PXS-V108A or B: must open, and Air-operated valves PXS-V130A or B: must close
Initiating signals:	PMS – low SG level (narrow range) coincident with low SFW flow. DAS – high hot leg temperature
Operator actions:	No credit for manual actuation

Table 8-2c

FAULT TREE "PRL" SUCCESS CRITERIA

Event description:	Failure of passive residual heat removal to remove decay heat from the reactor coolant system following small loss of coolant accidents
Success configuration:	One or both of the air-operated valves on the passive residual heat removal heat exchanger outlet to cold leg line are required to open One or both air-operated valves on the IRWST gutter/waste sump line are required to close
System initial status:	Passive residual heat removal system in standby position with air-operated valves in normal position
Mission time:	24 hours
Components required to change status:	Air-operated valves PXS-V108A or B: must open, and Air-operated valves PXS-V130A or B: must close
Initiating signals:	PMS – core makeup tank system automatic actuation
Operator actions:	To recognize the need for high-pressure decay heat removal following loss of main feedwater system (See basic event HPM-MAN01) To actuate passive residual heat removal air-operated valves PXS-V108A and PXS-V108B, PXS-V130A, and PXS-V130B if automatic actuation fails, given a small loss of coolant accident (See basic event PRN-MAN02).

Table 8-2d

FAULT TREE "PRP" SUCCESS CRITERIA

Event description:	Failure of passive residual heat removal to remove decay heat from the reactor coolant system following loss of offsite power event
Success configuration:	One or both of the air-operated valves on the passive residual heat removal heat exchanger outlet to cold leg line are required to open One or both air-operated valves on the IRWST gutter/waste sump line are required to close
System initial status:	Passive residual heat removal system in standby position with air-operated valves in normal position
Mission time:	24 hours
Components required to change status:	Air-operated valves PXS-V108A or B: must open, and Air-operated valves PXS-V130A or B: must close
Initiating signals:	PMS – low steam generator level (wide range) DAS – high hot leg temperature
Operator actions:	To recognize the need for high-pressure decay heat removal following loss of main feedwater system (See basic event HPM-MAN01) To actuate passive residual heat removal air-operated valves PXS-V108A and PXS-V108B, PXS-V130A, and PXS-130B if automatic actuation fails, given a loss offsite power (See basic event PRN-MAN02)

Table 8-2e

FAULT TREE "PRS" SUCCESS CRITERIA

Event description:	Failure of passive residual heat removal to remove decay heat from the reactor coolant system following a steam generator tube rupture event
Success configuration:	One or both of the air-operated valves on the passive residual heat removal heat exchanger outlet to cold leg line are required to open One or both air-operated valves on the IRWST gutter/waste sump line are required to close
System initial status:	Passive residual heat removal system in standby position with air-operated valves in normal position
Mission time:	24 hours
Components required to change status:	Air-operated valves PXS-V108A or B: must open, and Air-operated valves PXS-V130A or B: must close
Initiating signals:	PMS – S-signal
Operator actions:	To recognize the need for high-pressure decay heat removal following loss of main feedwater system (See basic event HPM-MAN01) To actuate passive residual heat removal air-operated valves PXS-V108A and PXS-V108B, PXS-130A, and PXS-130B if automatic actuation fails, given steam generator tube rupture (see basic event PRN-MAN02)

Table 8-2f

FAULT TREE "PRW" SUCCESS CRITERIA

Event description:	Failure of passive residual heat removal to remove decay heat from the reactor coolant system following a station blackout and loss of compressed air system events
Success configuration:	One or both of the air-operated valves on the passive residual heat removal heat exchanger outlet to cold leg line are required to open One or both air-operated valves on the IRWST gutter/waste sump line are required to close
System initial status:	Passive residual heat removal system in standby position with air-operated valves in normal position
Mission time:	24 hours
Components required to change status:	Air-operated valves PXS-V108A or B: must open, and Air-operated valves PXS-V130A or B: must close
Initiating signals:	None
Operator actions:	None

Table 8-2g

FAULT TREE "PRI" SUCCESS CRITERIA

Event description:	Failure to isolate the failed passive residual heat removal heat exchanger before reactor trip is reached for the case in which chemical and volume control system makeup is available
Success configuration:	Motor-operated valve PXS-V101 on the inlet line closed, air-operated valves PXS-V108A and PXS-V108B on the outlet line closed
System initial status:	Passive residual heat removal system in standby position with motor-operated valve PXS-V101 on the inlet line open, air-operated valves PXS-V108A and PXS-V108B close or open
Mission time:	24 hours
Components required to change status:	Motor-operated isolation valve PXS-V101: must close Air-operated valves PXS-V108A and PXS-V108B must reclose after opening
Initiating signals:	None
Operator actions:	To recognize the need to isolate the failed passive residual heat removal heat exchanger following heat exchanger tube rupture (See basic event PRI-MAN01)

Table 8-3

SYSTEM DEPENDENCY MATRIX

Components	125 vdc Class 1E				CAS	Actuation Signals			
						DAS		PMS	
	IDSA-DK1	IDSA-DD1	IDSB-DD1	IDSD-DD1		Auto	Manual	Auto	Manual
Motor-operated valve PXS-V101	X(1)						X		X
Air-operated valve PXS-V108A		X			X(1)	X	X	X	X
Air-operated valve PXS-V108B			X		X(1)	X	X	X	X
Air-operated valve PXS-V130A			X		X(1)	X	X	X	X
Air-operated valve PXS-V130B				X	X(1)	X	X	X	X

Notes:
1. Only used in the passive residual heat removal system isolation fault trees

CAS – Compressed and instrument air system
DAS – Diverse actuation system
PMS – Protection and safety monitoring system

Table 8-4

COMPONENT TEST ASSUMPTIONS

Component Identification Type/Name	Expected Test Frequency
Air-operated valve PXS-V108A	3 months
Air-operated valve PXS-V108B	3 months
Motor-operated valve PXS-V101	3 months
Air-operated valve PXS-V130A	3 months
Air-operated valve PXS-V130B	3 months

Table 8-5

COMPONENT MAINTENANCE ASSUMPTIONS

Component(s) Identification Type/Name	Expected Frequency of Maintenance	Components Aligned Away from Emergency Position w/o Automatic Return Logic	Components not Verified by Surveillance Test After Maintenance	Expected Outage Time for Maintenance
None identified	No scheduled maintenance required (see note below)	Not applicable	Not applicable	Not applicable

Note:
If, during testing, either of the PRHR air-operated valves (PXS-V108A and B) is found to require repair, then the faulty valve is taken out of service for maintenance. This valve is repaired and put back into service within 72 hours. An unavailability value of 5.00E-04/d per valve is used.

Table 8-6

OPERATOR ACTIONS AND MISPOSITION ANALYSIS SUMMARY

Event Name	Description
HPM-MAN01	Failure to recognize the need for high-pressure decay heat removal following loss of main feedwater system
PRN-MAN01	Failure to actuate passive residual heat removal air-operated valves PXS-V108A & PXS-V108B, and PXS-130A & PXS-130B if automatic actuation fails, given a transient
PRN-MAN02	Failure to actuate passive residual heat removal air-operated valves PXS-V108A & PXS-V108B, and PXS-130A & PXS-130B if automatic actuation fails, given a loss of coolant accident, loss of offsite power/station blackout, or steam generator tube rupture event
PRI-MAN01	Failure to recognize the need and isolate the failed heat exchanger by closing the motor-operated valves on the inlet lines and reclosing the air-operated valves on the outlet line (if they should automatically open) following a passive residual heat removal tube rupture event

Table 8-7

COMMON CAUSE FAILURES SUMMARY

Event Name	Description
PXX-AV-LA	Common cause of CMT, and PRHR AOVs to open
PXX-AV-LA1	Common cause of IRWST gutter AOVs to close

Table 8-8 (Sheet 1 of 3)

BASIC EVENTS DATABASE FOR THE PRHR SYSTEM FAULT TREES

FT IDENT	COMP	FAILURE MODE	FAIL RATE	VARIANCE	SOURCE	TIME	PROBABILITY	VARIANCE
IWNTK001AF	TK	TANK FAILURE – ALL MODES	1.000E-07	0 000E+00	SEC3	2.400E+01	2 40E-06	0 00E+00
PCNHR001ML	HR	H/X (PRHR) LEAKS WHILE PRESSURIZED	1.000E-07	0 000E+00	SEC3	2.400E+1	2 40E-06	0 00E+00
PRAAV108LA	AV	AOV FAILS TO OPERATE TO DEENERGIZED POSITION	1 000E-06	0 000E+00	EPRI	1 095E+03	1.09E-03	0.00E+00
PRAAV108TM	--	SAFETY-RELATED SYSTEM MAJOR COMPONENT T&M UNAVAILABILITY (PUMPS, VALVES)	5 000E-04	0.000E+00	EPRI	0 000E+00	5 00E-04	0.00E+00
PRAAV130LA	AV	AOV FAILS TO OPERATE TO DEENERGIZED POSITION	1 000E-06	0 000E+00	EPRI	1.095E+03	1 09E-03	0 00E+00
PRAAV130TM	--	SAFETY-RELATED SYSTEM MAJOR COMPONENT T&M UNAVAILABILITY (PUMPS, VALVES)	5 000E-04	0.000E+00	EPRI	0.000E+00	5 00E-04	0.00E+00
PRAEV108TM	--	SAFETY-RELATED SYSTEM MAJOR COMPONENT T&M UNAVAILABILITY (PUMPS, VALVES)	5 000E-04	0 000E+00	EPRI	0 000E+00	5 00E-04	0 00E+00
PRAMOD10	AV	AOV FAILS TO OPERATE TO OTHER THAN DEENERGIZED POSITION	2 000E-03	0 000E+00	EPRI	0 000E+00	2.00E-03	0 00E+00
	RS	SOLID STATE RELAY FAILS TO OPERATE	1 000E-07	0.000E+00	SEC3	1.095E+03	1.10E-04	0 00E+00
						TOTAL	2 11e-03	0 00e+00
PRAMOD9	MV	MOV FAILURE TO CLOSE	1 000E-05	0.000E+00	EPRI	1.095E+03	1 10E-02	0 00E+00
	CR	CIRCUIT BREAKER (<600V) FAILURE TO CLOSE	2 800E-06	0 000E+00	SEC3	1.095E+03	3 07E-03	0 00+00
	RS	SOLID STATE RELAY FAILS TO OPERATE	1 000E-07	0 000E+00	SEC3	1.095E+03	1.10E-04	0 00E+00
						TOTAL	1.41e-02	0 00e+00
PRBAV108LA	AV	AOV FAILS TO OPERATE TO DEENERGIZED POSITION	1 000E-06	0 000E+00	EPRI	1.095E+03	1 09E-03	0 00E+00
PRBAV108TM	--	SAFETY-RELATED SYSTEM MAJOR COMPONENT T&M UNAVAILABILITY (PUMPS, VALVES)	5 000E-04	0 000E+00	EPRI	0 000E+00	5.00E-04	0 00E+00
PRAAV130LA	AV	AOV FAILS TO OPERATE TO DEENERGIZED POSITION	1 000E-06	0 000E+00	EPRI	1 095E+03	1 09E-03	0 00E+00
PRBAV130TM	--	SAFETY-RELATED SYSTEM MAJOR COMPONENT T&M UNAVAILABILITY (PUMPS, VALVES)	5.000E-04	0 000E+00	EPRI	0 000E+00	5.00E-04	0 00E+00
PRBEV108TM	--	SAFETY-RELATED SYSTEM MAJOR COMPONENT T&M UNAVAILABILITY (PUMPS, VALVES)	5 000E-04	0 000E+00	EPRI	0 000E+00	5.00E-04	0 00E+00

Table 8-8 (Sheet 2 of 3)

BASIC EVENTS DATABASE FOR THE PRHR SYSTEM FAULT TREES

FT IDENT	COMP	FAILURE MODE	FAIL RATE	VARIANCE	SOURCE	TIME	PROBABILITY	VARIANCE
PRBMOD10	AV	AOV FAILS TO OPERATE TO OTHER THAN DEENERGIZED POSITION	2 000E-03	0 000E+00	SEC3	1.095E+03	2 00E-03	0 00E+00
	RS	SOLID STATE RELAY FAILS TO OPERATE	1 000E-07	0 000E+00	SEC3	1 095E+03	1.10E-04	0.00E+00
						TOTAL	2.11e-03	0 00e+00
PRBMOD9	MV	MOV FAILURE TO CLOSE	1 000E-05	0 000E+00	EPRI	1.095E+03	1.10E-02	0 00E+00
	CR	CIRCUIT BREAKER (<600V) FAILURE TO CLOSE	2 800E-06	0 000E+00	SEC3	1.095E+03	3 07E-03	0 00E+00
	RS	SOLID STATE RELAY FAILS TO OPERATE	1.000E-07	0 000E+00	SEC3	1 095E+03	1.10E-04	0 00E+00
						TOTAL	1.41e-02	0 00e+00
PRBMV101GC	MV	MOV FAILURE TO CLOSE	1.000E-05	0 000E+00	EPRI	1 095E+03	1.10E-02	0 00E+00
PRI-MAN01	--	OPERATOR FAILS TO RECOGNIZE NEED AND FAILS TO ISOLATE FAILED H/X AFTER PRHR TUBE RUPTURE	4 960E-04	0 000E+00	HRA	0 000E+00	4 96E-04	0 00E+00
PXX-AV-LA	--	CCF OF PRHR AOVs TO OPERATE TO DEENERGIZED POSITION	9 600E-05	0 000E+00	CCF	0 000E+00	9 60E-05	0 00E+00
PXX-AV-LA1	--	CCF OF PRHR AOVs TO OPERATE TO DEENERGIZED POSITION	9 600E-05	0 000E+00	CCF	0 000E+00	9 60E-05	0 00E+00
SUB-CAIR	XX	PROBABILITY FOR SUB- BASIC EVENTS	1.000E-01	0 000E+00	SUB-	0 000E+00	1 00E-01	0 00E+00
SUB-IDADD1	XX	PROBABILITY FOR SUB- BASIC EVENTS	1.000E-01	0 000E+00	SUB-	0 000E+00	1.00E-01	0 00E+00
SUB-IDADK1	XX	PROBABILITY FOR SUB- BASIC EVENTS	1 000E-01	0 000E+00	SUB-	0 000E+00	1 00E-01	0 00E+00
SUB-IDBDD1	XX	PROBABILITY FOR SUB- BASIC EVENTS	1 000E-01	0 000E+00	SUB-	0 000E+00	1 00E-01	0 00E+00
SUB-IDBDK1	XX	PROBABILITY FOR SUB- BASIC EVENTS	1 000E-01	0 000E+00	SUB-	0 000E+00	1.00E-01	0 00E+00
SUB-RHR-IC01	XX	PROBABILITY FOR SUB- BASIC EVENTS	1 000E-01	0 000E+00	SUB-	0 000E+00	1 00E-01	0 00E+00
SUB-RHR-IC02	XX	PROBABILITY FOR SUB- BASIC EVENTS	1.000E-01	0 000E+00	SUB-	0 000E+00	1 00E-01	0 00E+00
SUB-RHR-IC03	XX	PROBABILITY FOR SUB- BASIC EVENTS	1 000E-01	0 000E+00	SUB-	0 000E+00	1 00E-01	0.00E+00
SUB-RHR-IC04	XX	PROBABILITY FOR SUB- BASIC EVENTS	1.000E-01	0 000E+00	SUB-	0 000E+00	1 00E-01	0 00E+00
SUB-RHR-IC05	XX	PROBABILITY FOR SUB- BASIC EVENTS	1 000E-01	0 000E+00	SUB-	0 000E+00	1 00E-01	0 00E+00
SUB-RHR-IC06	XX	PROBABILITY FOR SUB- BASIC EVENTS	1 000E-01	0 000E+00	SUB-	0 000E+00	1 00E-01	0 00E+00

Table 8-8 (Sheet 3 of 3)

BASIC EVENTS DATABASE FOR THE PRHR SYSTEM FAULT TREES

FT IDENT	COMP	FAILURE MODE	FAIL RATE	VARIANCE	SOURCE	TIME	PROBABILITY	VARIANCE
SUB-RHR-IC07	XX	PROBABILITY FOR SUB- BASIC EVENTS	1.000E-01	0.000E+00	SUB-	0 000E+00	1 00E-01	0 00E+00
SUB-RHR-IC08	XX	PROBABILITY FOR SUB- BASIC EVENTS	1 000E-01	0 000E+00	SUB-	0 000E+00	1 00E-01	0 00E+00
SUB-RHR-IC09	XX	PROBABILITY FOR SUB- BASIC EVENTS	1 000E-01	0 000E+00	SUB-	0 000E+00	1 00E-01	0 00E+00
SUB-RHR-IC10	XX	PROBABILITY FOR SUB- BASIC EVENTS	1.000E-01	0 000E+00	SUB-	0 000E+00	1 00E-01	0 00E+00
SUB-RHR-IC11	XX	PROBABILITY FOR SUB- BASIC EVENTS	1 000E-01	0 000E+00	SUB-	0 000E+00	1.00E-01	0.00E+00
SUB-RHR-IC12	XX	PROBABILITY FOR SUB- BASIC EVENTS	1.000E-01	0 000E+00	SUB-	0 000E+00	1 00E-01	0 00E+00
SUB-RHR-IC13	XX	PROBABILITY FOR SUB- BASIC EVENTS	1 000E-01	0.000E+00	SUB-	0 000E+00	1 00E-01	0.00E+00
SUB-RHR-IC14	XX	PROBABILITY FOR SUB- BASIC EVENTS	1 000E-01	0 000E+00	SUB-	0 000E+00	1 00E-01	0.00E+00
SUB-RHR-IC1A	XX	PROBABILITY FOR SUB- BASIC EVENTS	1 000E-01	0 000E+00	SUB-	0 000E+00	1 00E-01	0 00E+00
SUB-RHR-IC2A	XX	PROBABILITY FOR SUB- BASIC EVENTS	1 000E-01	0 000E+00	SUB-	0 000E+00	1 00E-01	0 00E+00

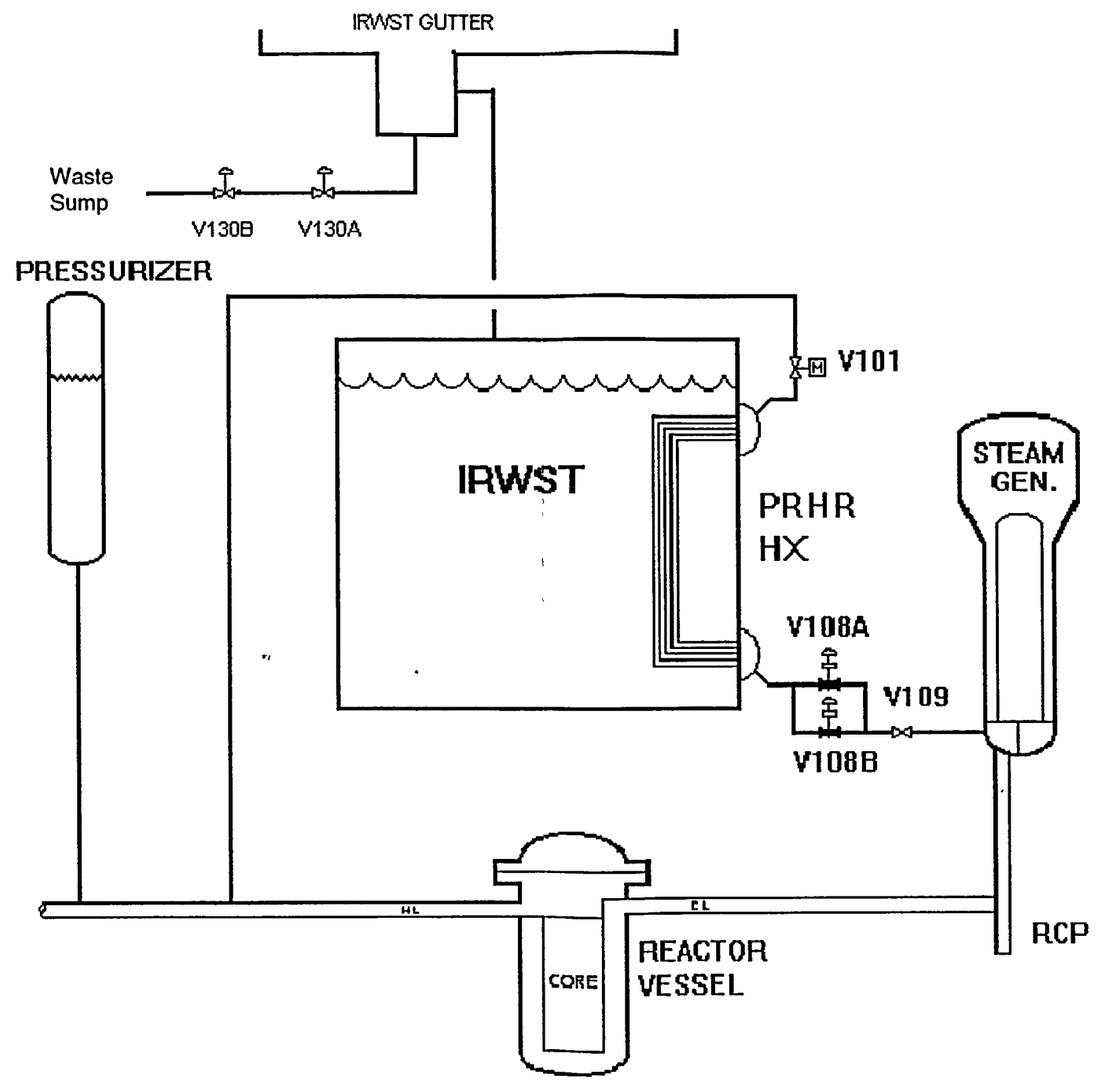

Figure 8-1

PRHR – Simplified Piping and Instrumentation Diagram

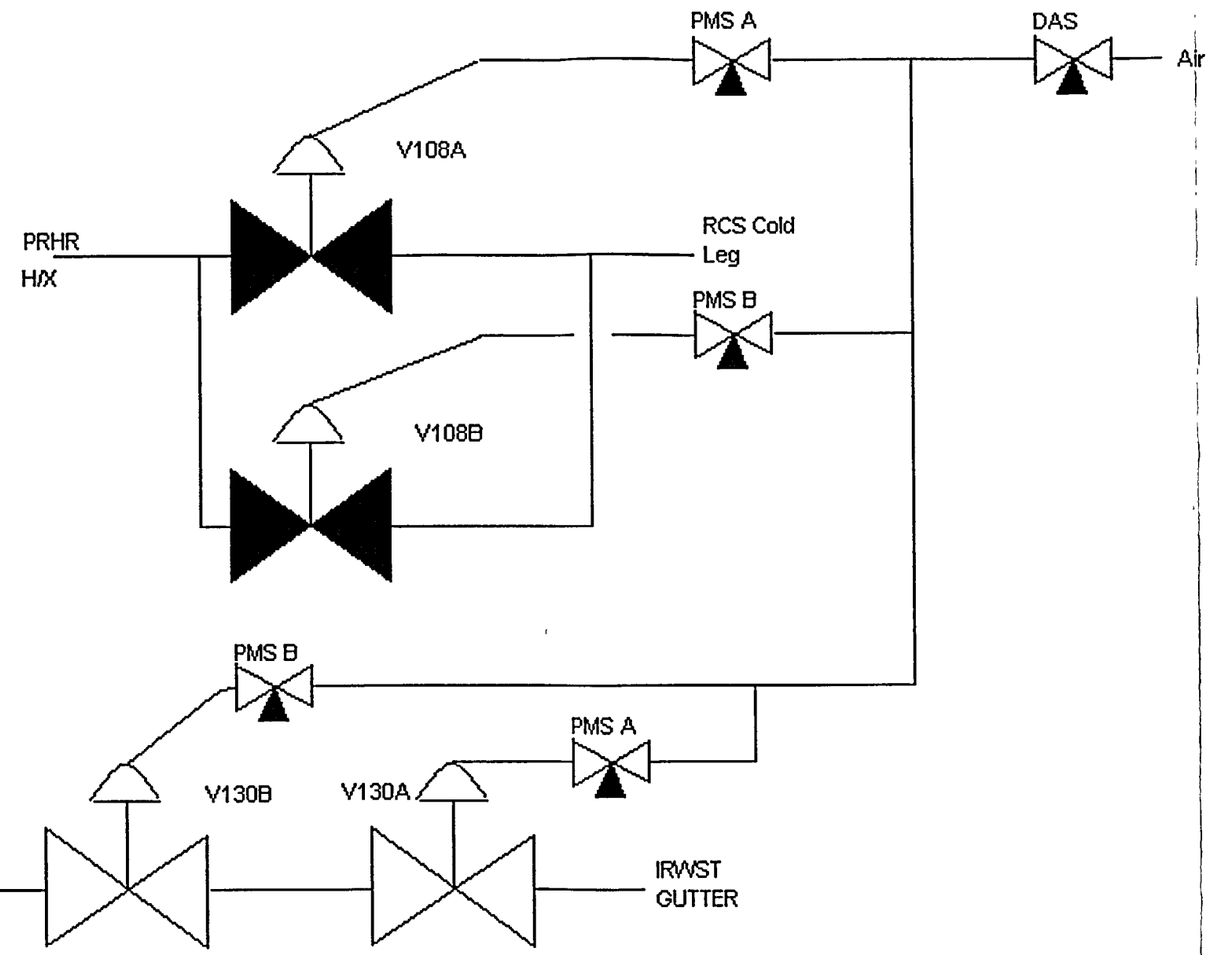

Notes:
Valves V108A&B are air-operated in their energized position (normally closed).
Valves V130A&B are air-operated in their energized position (normally open).
The PMS controlled valves are three-way solenoid valves in their energized position.
The DAS controlled valve is a three-way solenoid valve in its energized position.

Figure 8-2

PRHR – Simplified Valve Control Diagram

CHAPTER 12

PASSIVE CORE COOLING SYSTEM – IN-CONTAINMENT REFUELING WATER STORAGE TANK

12.1 System Function

This chapter evaluates the reliability of the in-containment refueling water storage tank (IRWST)/gravity injection subsystem. The function of the IRWST/gravity injection is to provide flooding of the refueling cavity for normal refueling, post-loss-of-coolant-accident (LOCA) flooding of the containment to establish long-term reactor coolant system (RCS) cooling, and to support the passive residual heat removal (PRHR) heat exchangers (HXs) operation. The IRWST forms a subsystem of the passive core cooling system. The other subsystems of the passive core cooling system (PXS) are: core makeup tank system, accumulator system, automatic depressurization system (ADS), and passive residual heat removal system.

12.2 System Description

The general layout of the IRWST/gravity injection subsystem is shown in a simplified piping and instrumentation diagram, Figure 12-1, and described in Section 6.3 of the AP1000 Design Control Document (DCD). The function of the IRWST/gravity injection subsystem is described by the following discussions on its support systems, instrumentation and control, and test and maintenance requirements, as applicable.

12.2.1 Support Systems

The actuation signals required for initiation of the passive core cooling system (PXS) component functions are provided by the protection and safety monitoring system (PMS), that is powered by four redundant, independent battery divisions. These batteries provide power for required passive core cooling system valve actuation and necessary post-accident monitoring instrumentation. The system dependency assumed in the fault tree models is discussed in Section 12.6.2.

12.2.2 Instrumentation and Control

When the core makeup tank (CMT) low-level setpoint is reached, the ADS is actuated. The CMT level signal, that actuates the ADS fourth stage, automatically opens the IRWST/gravity injection squib valves (PXS-V123A and B, and PXS-V125A and B). When the ADS depressurizes the reactor coolant system to a low pressure, the check valves (PXS-V122A and B, and PXS-V124A and B) in the gravity injection lines open to allow water into the RCS.

The IRWST receives condensed steam from containment through a gutter arrangement, with normally open sump drain valves (V130A and B) that automatically close when the passive residual heat removal system (PRHR) actuates.

For the containment sump recirculation, when the IRWST low-3 level setpoint is reached, coincident with an automatic depressurization system actuation signal, the motor-operated valve/squib valve flow paths and check valve/squib valve flow paths are aligned for recirculation. Upon receipt of these signals, the normally closed motor-operated valves (PXS-V117A and B), and squib valves (PXS-V118A and B, and PXS-V120A and B) open to provide recirculation flow. Squib valves PXS-V118A and B are arranged in series with motor-operated valves PXS-V117A and B; these flow paths are parallel to the flow paths of squib valves PXS-V120A and B in series with check valves PXS-V119A and B. The motor-operated valve/squib valve flow paths can also be manually opened to dump the water from the IRWST to the reactor cavity in case of a severe accident.

12.2.3 Test and Maintenance

The IRWST/gravity injection subsystem is a passive safety-related system that requires squib valves and check valves to open to initiate flow. The motor-operated isolation valves (PXS-V121A and B) on the gravity injection lines are normally open, with power removed, and fail "as is." They are only tested during shutdown where mid-loop conditions are reached.

The gravity injection system is tested during every refueling outage to verify that the check valves (PXS-V122A and B, and PXS-V124A and B) and squib valves (PXS-V123A and B, and PXS-V125A and B) are operable.

The containment sump recirculation motor-operated valves (PXS-V117A and B) are cycled on a quarterly basis to verify valve operability; check valves PXS-V119A and B are flow tested at refueling; and the containment sump recirculation squib valves (PXS-V118A and B, and PXS-V120A and B) are tested at refueling.

Further details on component test and maintenance assumptions are provided in Section 12.6.2.

12.3 System Operation

During normal operation, the IRWST is sealed from the containment atmosphere and is maintained nearly full of water. The single isolation valve (PXS-V121A or PXS-121B) in each of the two discharge lines from the IRWST to the reactor vessel is normally open, with power removed, and the reactor coolant system pressure boundary is maintained by the squib valves.

12.4 Performance During Accident Conditions

This section discusses the success criteria for the operation of the IRWST/gravity injection subsystem following different initiating events.

The success criteria are the following:

- IRWST/Gravity Injection – The IRWST/gravity injection requires squib valve and check valve opening to initiate flow. The CMT level signal, that actuates the ADS fourth stage,

automatically opens the IRWST/gravity injection squib valves; the squib valves can be manually actuated if automatic actuation fails. When the RCS pressure decreases sufficiently, the check valves in the gravity injection lines open to allow water into the reactor coolant system. Each of the gravity injection lines is designed to provide sufficient flow for long-term core cooling.

The success criterion for the IRWST/gravity injection response to transient and loss of coolant accident events, except a loss of coolant accident with a break located in one of the gravity injection lines, is one out of two lines available to inject water into the reactor coolant system. For a loss of coolant accident (LOCA) with a break located in one of the gravity injection lines, the success criterion is one out of one line injecting water into the reactor coolant system through one out of two parallel check valve/squib valve flow paths.

- Containment Sump Recirculation – The containment sump recirculation is automatically actuated upon receipt of a low-3 IRWST water level in coincidence with an ADS actuation signal. The operators can manually actuate it (if automatic actuation fails to open the recirculation squib valves). The recirculation motor-operated valves are normally open valves.

  When the system is actuated, all normally closed squib valves on the recirculation lines open, allowing the water in the containment sump to provide recirculation flow to the core through the direct vessel injection lines. Recirculation flow is also provided through parallel check valve/squib valve flow paths; the check valves open once a sufficient gravity injection head is established.

  The success criterion for the containment sump recirculation is defined as injection into the reactor coolant system from the containment sump through one out of four recirculation lines and the corresponding gravity injection lines. This flow can be either through the motor-operated valve/squib valve flow path or the parallel check valve/squib valve flow path.

- Flooding Reactor Cavity – Following a severe accident, the operator can flood the reactor cavity by draining the IRWST. This is accomplished by manually opening the squib valves (PXS-V118A and B) on the recirculation lines. The success criterion is defined as one of two recirculation lines available to drain water from the IRWST to the reactor cavity.

12.4.1 Transients

Assuming a reactor trip following a non-loss of coolant accident (non-LOCA) event with a minor RCS leak, the pressurizer level slowly decreases. Upon receipt of a low-2 pressurizer level signal, the core makeup tank inlet and outlet isolation valves are opened. The water in the core makeup tanks flows into the reactor vessel. This restores the pressurizer water level to about the low-2 level. Core decay heat continues to be removed by natural circulation of the reactor coolant through either the steam generators or the PRHR heat exchangers. If the level in either CMT decreases to its low-level setpoint, the automatic depressurization system

is actuated. Depressurization of the reactor coolant system allows gravity injection from the IRWST to inject into the reactor vessel.

Reactor coolant system depressurization is assisted by condensation of the steam in the PRHR heat exchanger when the water level in the reactor coolant system is below the top of the loop piping. Draining of the IRWST establishes the long-term cooling mode (recirculation), where the water level in the containment building is above the RCS loop piping. In this long-term cooling mode, the core is covered and steams to the containment via the depressurization valves. The water in the containment sump provides recirculation flow to the core through the direct vessel injection lines. In addition, some of the steam that condenses on the containment steel shell, which is cooled via the passive containment cooling system, is returned to the reactor vessel via the IRWST/gravity injection lines.

12.4.2 Loss of Coolant Accidents

Following a postulated loss of coolant accident, the reactor coolant system pressure decreases and initiates a reactor trip and safeguards actuation signal. The reactor coolant pumps also trip on the safeguard actuation signal. In the event of a large LOCA, a rapid depressurization of the reactor coolant system occurs. When the reactor coolant system pressure decreases below the accumulator normal operating pressure (approximately 700 psig), the nitrogen gas in the accumulator forces a large flow rate of borated water into the reactor vessel downcomer. After blowdown terminates, the borated water refills the reactor vessel lower plenum and downcomer and initiates re-flooding of the core. Should the loss of inventory from the RCS be sufficient to drain the RCS below the top of the loop piping, the connections on the top of the two RCS cold legs to the top of the CMT are uncovered, permitting saturated steam to enter the top of the CMTs. The elevation difference between the cold water in the CMT and the water in the corresponding cold leg causes the CMT water to be injected into the reactor vessel.

Depending on the break location, only one CMT may be available for injection (such as, a break in the CMT injection line). When the level in either of the CMTs decreases to its low-level setpoint, the ADS is actuated. The ADS fourth stage actuation signal also opens the IRWST/gravity injection squib valves.

Depressurization of the RCS initiates the draining of the IRWST into the reactor vessel. RCS depressurization is assisted by condensation of the steam in the PRHR heat exchanger, once the water level in the RCS is below the top of the loop piping. Draining of the IRWST establishes the long-term cooling mode (recirculation). During this mode, the IRWST water drains through the reactor vessel (and/or break), and the water level in the containment building is above the reactor coolant system loop piping. In this long-term cooling mode, the core is covered and the steam boils off into the containment. The water in the containment sump provides recirculation flow to the core through the direct vessel injection line. In addition, some of the steam that condenses on the containment steel shell, which is cooled via the passive containment cooling system, is returned to the reactor vessel via the IRWST/gravity injection lines and/or the recirculation gravity injection lines. If one of the two-recirculation trains is lost, the system design permits the opposite train to be used by feeding through the IRWST.

12.4.3 In-Vessel Core Damage Mitigation

During a severe accident, the operator floods the reactor cavity by draining through the normally opened motor operated valves and by opening the squib valves on the recirculation lines. Draining the IRWST permits the water level in the containment building to be above the RCS loop piping, and establishes the long-term cooling mode. Timely action prevents reactor vessel failure.

12.4.4 Containment Isolation System Failure

During the long-term core cooling following an accident, if there is containment isolation system failure, some of the steam due to core heat removal escapes to the outside of containment instead of condensing on the containment steel shell and returning to the reactor vessel via the IRWST/gravity injection lines and the recirculation gravity injection lines. If the containment isolation is lost, it is assumed two of the four-recirculation lines need to be open for long term core cooling success.

12.5 Initiating Event

This section discusses the effects of unavailability of the IRWST/gravity injection subsystem, and examines the possibility of accident initiators caused by failure of the IRWST/gravity injection subsystem.

12.5.1 Initiating Event Impacting IRWST/Gravity Injection Subsystem

The IRWST/gravity injection subsystem is a passive safety-related system and can perform its function without reliance on support systems. The only initiator that adversely impacts the ability of the IRWST to perform its function is a loss of coolant accident. The location of the break in a loss of coolant accident determines whether the success criterion for the gravity injection is one out of one, or one out of two lines, with parallel check valve/squib valve flow paths in each line. The IRWST/gravity injection squib valves (PXS-V123A and B and PXS-V125A and B) open automatically when the ADS fourth stage is actuated. However, the operators can manually actuate the squib valves if automatic actuation fails.

The containment sump recirculation squib valves automatically open upon receipt of low-3 IRWST water level (nearly empty) in coincidence with an ADS signal. These squib valves (PXS-V118A and B, and PXS-V120A and B) can also be opened manually if the automatic actuation is not successful.

12.5.2 Initiating Event due to Loss of IRWST/Gravity Injection Subsystem

The IRWST/gravity injection subsystem is a passive safety-related system that provides injection and core cooling during various events. However, in the unexpected case of excessive reactor coolant system leakage into the IRWST, back-leakage from the IRWST to the containment sump, or rupture of the IRWST, the plant is expected to be shut down before an initiating event develops.

12.6 System Logic Models

This section presents the logic models used for quantification of system performance under various conditions. Each model depicts the system performance, given an initiating event. The top event logic for each model is defined by the success criteria, which are directly related to the initiator.

12.6.1 Assumptions and Boundary Conditions

In addition to the general project assumptions, the following apply to the IRWST/gravity injection subsystem:

1. IRWST/gravity injection requires check valves and squib valves opening to initiate flow. The squib valves must open upon receipt of a PMS (low CMT level) signal that actuates ADS fourth stage automatically. If automatic actuation of ADS fourth stage and IRWST injection squib valves fails, then manual actuation of ADS fourth stage will also actuate the IRWST injection squib valves. In other words, manual actuation of the ADS fourth stage and IRWST injection squib valves are carried out by the same operator action. Therefore, failure of the squib valves to open automatically and manually is modeled in the injection fault trees.

   A separate control is provided to actuate the IRWST injection squib valves, independent of the control that also actuates the ADS fourth stage; however, actuation of the IRWST injection squib valves by this independent control is not modeled in the PRA.

   The squib valves in the recirculation paths open automatically on low-3 IRWST level, and can be opened manually if automatic actuation fails. Therefore, automatic and manual actuation failures of these valves are reflected in the recirculation fault trees.

2. The IRWST injection uses four high-pressure (HP) squib valves. The IRWST recirculation system consists of two HP squib valves and two low-pressure (LP) squib valves. These valves are grouped into one common-cause failure (CCF) group of six HP squib valves and one CCF group of two LP squib valves.

   The squib valves in the containment recirculation lines are designed to a significantly lower pressure than the IRWST injection lines (150 psi vs 2500 psi). In addition, their normal operating conditions are significantly different. The injection line valves have RCS pressure on one side and the pressure head of the IRWST on the other side. The recirculation valves have the head of the IRWST on one side and containment pressure on the other side. As a result, these valves have very different internal parts and propellant charges. As a result, the potential of CCF of these two squib valve types is considered negligible.

   A similar situation exists for the check valves in the injection lines and the recirculation lines. The check valves in the injection lines are designed to withstand the full RCS pressure that will exist after the squib valves on those lines open. The check valves in the recirculation lines are designed to withstand only the head of the IRWST. The two

check valve designs are different, and common cause failures of the recirculation check valves do not affect the check valves in the injection lines.

3. For the purpose of this analysis, it is assumed that the recirculation mode is established following the success of IRWST/gravity injection; in which case, the check valves and squib valves in the gravity injection lines are expected to be operational, and the injection lines are not expected to be plugged. Therefore, random failures of the gravity injection check valves (PXS-V122A and B, and PXS-V124A and B), squib valves (PXS-V123A and B, and PXS-V125A and B), and plugging of the injection lines are not modeled in the recirculation fault trees RECIRA, RECIRAP, RECIRB, RECIRC, RECIRC1 and RECIRP.

4. During normal operation, the motor-operated isolation valves (PXS-V121A and B) on the gravity injection lines are normally open, with power removed, and fail "as is" upon loss of power. These valves alarm if they are closed and they also receive confirmatory actuation signal to open upon receipt of safeguards actuation signal. Therefore, these valves are not modeled.

5. The IRWST/gravity injection subsystem is flow tested at refueling to verify that check valves open to initiate flow.

6. The IRWST/gravity injection and sump recirculation squib valves are tested at refueling.

7. Motor-operated valves (PXS-V117A and B), on containment sump recirculation lines are tested quarterly.

8. Common cause failure (CCF) due to plugging of the IRWST tank strainers is reflected in fault tree cases that model injection from the IRWST. CCF due to plugging of the recirculation sump strainers is modeled in the recirculation fault tree cases.

9. Rupture of the IRWST is not modeled in the PRA since the water would empty into the recirculation sump, followed by IRWST recirculation by opening squib valves PXS-V118A/B and PXS-V120A/B. Moreover, rupture of the IRWST is not considered as an initiating event because it is assumed that, if the tank ruptures, the operator will shut down the plant before an initiating event develops.

10. The injection and recirculation check valves are normally in an environment comparable to that seen in current plants. The injection check valves, PXS-V122A and B and PXS-V124A and B, will normally have only a small differential pressure across them. This will be comprised of the difference between the IRWST head and the small amount of pressure that will be in the space between the check valve and the squib valve. That is, the check valves will not be exposed to reactor coolant system fluid, nor will they be exposed to reactor coolant system pressure.

    The recirculation check valves, PXS-119A and B, also usually exist in an environment with little or no differential pressure. These check valves have only the containment sump pressure on one side and the pressure between the check valve and the squib valve on the other. This differential pressure will be very small or zero.

12.6.2 Fault Tree Models

The IRWST/gravity injection subsystem was analyzed for the following events:

Transient and LOCA events:	Fault trees IW2AB, IW2ABM, IW1A, IW1AM, IWF, RECIRC, RECIRC1, RECIRA, RECIRAP
Blackout events:	Fault trees IW2ABB, IW2ABBM, RECIRB
LOSP events:	Fault trees IW2ABP, IW2ABPM, RECIRP
Large LOCA events:	Fault trees IW2ABA

Table 12-1 describes the IRWST/gravity injection subsystem fault trees for at-power conditions. Details on the fault trees models are provided in Tables 12-2a through 12-2p. System dependencies used in the analysis are provided in Table 12-3. The component test assumptions are shown in Table 12-4, and component maintenance assumptions are shown in Table 12-5. The probabilities, calculated specifically for use in the IRWST/gravity injection subsystem, are shown in Table 12-6.

The fault trees for the IRWST/gravity injection subsystem are shown in Appendix E.

12.6.3 Human Interactions

As shown in Table 12-7, there are no human actions required for operation of the IRWST/gravity injection subsystem.

IRWST/gravity injection require manual protection and safety monitoring system (PMS) actuation if automatic PMS actuation fails to open the injection line squib valves; this operator action is modeled in the fault trees as ADN-MAN01. Manual diverse actuation system (DAS) actuation for these squib valves is also modeled in the fault trees as REC-MANDAS.

Containment sump recirculation requires manual PMS actuation if automatic PMS actuation fails to open the squib valves; this operator action is modeled in the fault trees as REN-MAN02. Manual DAS actuation for recirculation squib valves (PXS-V120A/B) is also modeled in the fault trees as REC-MANDAS.

During containment sump recirculation, if one recirculation path in train B fails, the operator is required to throttle the residual heat removal system (RNS) pump discharge valve to preclude damage to the RNS pumps. This operator action is modeled in the fault trees as RHN-MAN06. The operator actions are analyzed in Chapter 30.

12.6.4 Common Cause Failures

The potential common cause failure events affecting the components of the IRWST/gravity injection subsystem are listed in Table 12-8. These common cause failures are modeled in the fault trees for the IRWST/gravity injection subsystem.

The common cause analysis is documented in Chapter 29.

12.7 Quantification and Results

The fault trees are quantified to obtain the top event probabilities and dominant cutsets for the success criteria defined in Tables 12-2a through 12-2p.

The fault tree basic events for the IRWST/gravity injection subsystem are shown in Table 12-9.

Table 12-1

LIST OF SYSTEM FAULT TREES (FT)

FT Name	Fault Tree Description
IW2AB	Failure of IRWST/gravity injection lines to deliver water from the IRWST to the reactor coolant system following a transient or LOCA
IW2ABM	Failure of IRWST/gravity injection line to deliver water from the IRWST to the reactor coolant system following a transient or LOCA (manual actuation only)
IW2ABA	Failure of IRWST/gravity injection lines to deliver water from the IRWST to the reactor coolant system following a large LOCA (automatic actuation only)
IW2ABP	Failure of IRWST/gravity injection lines to deliver water from the IRWST to the reactor coolant system following a LOOP
IW2ABPM	Failure of IRWST/gravity injection lines to deliver water from the IRWST to the reactor coolant system following a LOOP (manual actuation only)
IW2ABB	Failure of IRWST/gravity injection lines to deliver water from the IRWST to the reactor coolant system following a station blackout
IW2ABBM	Failure of IRWST/gravity injection lines to deliver water from the IRWST to the reactor coolant system following a station blackout (manual actuation only)
IW1A	Failure of IRWST/gravity injection line to deliver water from the IRWST to the reactor coolant system with a break in one of the direct vessel injection lines, following a transient or LOCA
IW1AM	Failure of IRWST/gravity injection line to deliver water from the IRWST to the reactor coolant system with a break in one of the direct vessel injection lines, following a transient or LOCA (manual actuation only)
IWF	Failure of recirculation flow paths to deliver water from the IRWST to the reactor cavity following core damage (manual actuation only)
RECIRC	Failure of recirculation lines to deliver water from the containment sump to the reactor coolant system following a transient or LOCA, given the success of IRWST/gravity injection and success of containment isolation
RECIRCP	Failure of recirculation lines to deliver water from the containment sump to the reactor coolant system following a LOOP, given the success of IRWST/gravity injection and success of containment isolation
RECIRCB	Failure of recirculation lines to deliver water from the containment sump to the reactor coolant system following a station blackout, given the success of IRWST/gravity injection and success of containment isolation
RECIRC1	Failure of recirculation lines to deliver water from the containment sump to the reactor coolant system following a transient or LOCA, given the success of IRWST/gravity injection and failure of containment isolation
RECIRC1P	Failure of recirculation lines to deliver water from the containment sump to the reactor coolant system following a LOOP, given the success of IRWST/gravity injection and failure of containment isolation
RECIRC1B	Failure of recirculation lines to deliver water from the containment sump to the reactor coolant system following a station blackout, given the success of IRWST/gravity injection and failure of containment isolation

Table 12-2a

FAULT TREE "IW2AB" SUCCESS CRITERIA SUMMARY

Event Description	Failure of IRWST/gravity injection lines to deliver water from the IRWST to the reactor coolant system following a transient or LOCA
Success Configuration	IRWST injection into the reactor coolant system through 1 out of 2 check valve/squib valve paths (with 1 check valve and 1 squib valve per path) in 1 out of 2 gravity injection lines
System Initial Status	IRWST/gravity injection subsystem is passive; the motor-operated isolation valve (PXS-V121A or B) on each gravity injection line is normally open; check valves (V122A/B and V124A/B) are closed; squib valves (V123A/B and 125A/B) are closed
Mission Time	24 hours
Components Required to Change Status	Squib valves on each gravity injection line must open on low CMT level signal or manually; check valves on each gravity injection line must open when reactor pressure drops below operating pressure of the IRWST
Initiating Signals	PMS: Automatic actuation on low CMT level (ADS 4th Stage Actuation Signal)
Operator Actions	Manual actuation of IRWST gravity injection squib valves, if automatic actuation fails; – basic event: ADN-MAN01 performed through PMS – basic event: REC-MANDAS performed through DAS

Table 12-2b

FAULT TREE "IW2ABM" SUCCESS CRITERIA SUMMARY

Event Description	Failure of IRWST/gravity injection lines to deliver water from the IRWST to the reactor coolant system following a transient or LOCA
Success Configuration	IRWST injection into the reactor coolant system through 1 out of 2 check valve/squib valve paths (with 1 check valve and 1 squib valve per path) in 1 out of 2 gravity injection lines
System Initial Status	IRWST/gravity injection subsystem is passive; the motor-operated isolation valve (PXS-V121A or B) on each gravity injection line is normally open; check valves (V122A/B and V124A/B) are closed; squib valves (V123A/B and 125A/B) are closed
Mission Time	24 hours
Components Required to Change Status	Squib valves on each gravity injection line must open on low CMT level signal or manually; check valves on each gravity injection line must open when reactor pressure drops below operating pressure of the IRWST
Initiating Signals	None
Operator Actions	Manual actuation of IRWST gravity injection squib valves, if automatic actuation fails; – basic event: ADN-MAN01 performed through PMS – basic event: REC-MANDAS performed through DAS

Table 12-2c

FAULT TREE "IW2ABA" SUCCESS CRITERIA SUMMARY

Event Description	Failure of IRWST/gravity injection lines to deliver water from the IRWST to the reactor coolant system following a large LOCA
Success Configuration	IRWST injection into the reactor coolant system through 1 out of 2 check valve/squib valve paths (with 1 check valve and 1 squib valve per path) in 1 out of 2 gravity injection lines
System Initial Status	IRWST/gravity injection subsystem is passive; the motor-operated isolation valve (PXS-V121A or B) on each gravity injection line is normally open; check valves (V122A/B and V124A/B) are closed; squib valves (V123A/B and 125A/B) are closed
Mission Time	24 hours
Components Required to Change Status	Squib valves on each gravity injection line must open on low CMT level signal; check valves on each gravity injection line must open when reactor pressure drops below operating pressure of the IRWST
Initiating Signals	PMS: Automatic actuation on low CMT level (ADS 4th Stage Actuation Signal)
Operator Actions	None

Table 12-2d

FAULT TREE "IW2ABP" SUCCESS CRITERIA SUMMARY

Event Description	Failure of IRWST/gravity injection lines to deliver water from the IRWST to the reactor coolant system following a LOOP
Success Configuration	IRWST injection into the reactor coolant system through 1 out of 2 check valve/squib valve paths (with 1 check valve and 1 squib valve per path) in 1 out of 2 gravity injection lines
System Initial Status	IRWST/gravity injection subsystem is passive; the motor-operated isolation valve (PXS-V121A or B) on each gravity injection line is normally open; check valves (V122A/B and V124A/B) are closed; squib valves (V123A/B and 125A/B) are closed
Mission Time	24 hours
Components Required to Change Status	Squib valves on each gravity injection line must open on low CMT level signal or manually; check valves on each gravity injection line must open when reactor pressure drops below operating pressure of the IRWST
Initiating Signals	PMS: Automatic actuation on low CMT level (ADS 4th Stage Actuation Signal)
Operator Actions	Manual actuation of IRWST gravity injection squib valves, if automatic actuation fails; – basic event: ADN-MAN01 performed through PMS – basic event: REC-MANDAS performed through DAS

Table 12-2e

FAULT TREE "IW2ABPM" SUCCESS CRITERIA SUMMARY

Event Description	Failure of IRWST/gravity injection lines to deliver water from the IRWST to the reactor coolant system following a LOOP
Success Configuration	IRWST injection into the reactor coolant system through 1 out of 2 check valve/squib valve paths (with 1 check valve and 1 squib valve per path) in 1 out of 2 gravity injection lines
System Initial Status	IRWST/gravity injection subsystem is passive; the motor-operated isolation valve (PXS-V121A or B) on each gravity injection line is normally open; check valves (V122A/B and V124A/B) are closed; squib valves (V123A/B and 125A/B) are closed
Mission Time	24 hours
Components Required to Change Status	Squib valves on each gravity injection line must open on low CMT level signal or manually; check valves on each gravity injection line must open when reactor pressure drops below operating pressure of the IRWST
Initiating Signals	None
Operator Actions	Manual actuation of IRWST gravity injection squib valves, if automatic actuation fails; – basic event: ADN-MAN01 performed through PMS – basic event: REC-MANDAS performed through DAS

Table 12-2f

FAULT TREE "IW2ABB" SUCCESS CRITERIA SUMMARY

Event Description	Failure of IRWST/gravity injection lines to deliver water from the IRWST to the reactor coolant system following a station blackout
Success Configuration	IRWST injection into the reactor coolant system through 1 out of 2 check valve/squib valve paths (with 1 check valve and 1 squib valve per path) in 1 out of 2 gravity injection lines
System Initial Status	IRWST/gravity injection subsystem is passive; the motor-operated isolation valve (PXS-V121A or B) on each gravity injection line is normally open; check valves (V122A/B and V124A/B) are closed; squib valves (V123A/B and 125A/B) are closed
Mission Time	24 hours
Components Required to Change Status	Squib valves on each gravity injection line must open on low CMT level signal or manually; check valves on each gravity injection line must open when reactor pressure drops below operating pressure of the IRWST
Initiating Signals	PMS: Automatic actuation on low CMT level (ADS 4th Stage Actuation Signal)
Operator Actions	Manual actuation of IRWST gravity injection squib valves, if automatic actuation fails; – basic event: ADN-MAN01 performed through PMS

Table 12-2g

FAULT TREE "IW2ABBM" SUCCESS CRITERIA SUMMARY

Event Description	Failure of IRWST/gravity injection lines to deliver water from the IRWST to the reactor coolant system following a station blackout
Success Configuration	IRWST injection into the reactor coolant system through 1 out of 2 check valve/squib valve paths (with 1 check valve and 1 squib valve per path) in 1 out of 2 gravity injection lines
System Initial Status	IRWST/gravity injection subsystem is passive; the motor-operated isolation valve (PXS-V121A or B) on each gravity injection line is normally open; check valves (V122A/B and V124A/B) are closed; squib valves (V123A/B and 125A/B) are closed
Mission Time	24 hours
Components Required to Change Status	Squib valves on each gravity injection line must open on low CMT level signal or manually; check valves on each gravity injection line must open when reactor pressure drops below operating pressure of the IRWST
Initiating Signals	None
Operator Actions	Manual actuation of IRWST gravity injection squib valves, if automatic actuation fails; – basic event: ADN-MAN01 performed through PMS

Table 12-2h

FAULT TREE "IW1A" SUCCESS CRITERIA SUMMARY

Event Description	Failure of IRWST/gravity injection lines to deliver water from the IRWST to the reactor coolant system with a break in one of the direct vessel injection lines
Success Configuration	IRWST injection into the reactor coolant system through 1 out of 2 check valve/squib valve paths (with 1 check valve and 1 squib valve per path) in 1 out of 1 gravity injection lines
System Initial Status	IRWST/gravity injection subsystem is passive; the motor-operated isolation valve (PXS-V121A) on gravity injection line A is normally open; check valves (V122A and V124A) are closed; squib valves (V123A and 125A) are closed
Mission Time	24 hours
Components Required to Change Status	Squib valves on gravity injection line A must open on low CMT level signal or manually; check valves on gravity injection line A must open when reactor pressure drops below operating pressure of the IRWST
Initiating Signals	PMS: Automatic actuation on low CMT level (ADS 4th Stage Actuation Signal)
Operator Actions	Manual actuation of IRWST gravity injection squib valves, if automatic actuation fails; – basic event: ADN-MAN01 performed through PMS – basic event: REC-MANDAS performed through DAS

Table 12-2i

FAULT TREE "IW1AM" SUCCESS CRITERIA SUMMARY

Event Description	Failure of IRWST/gravity injection lines to deliver water from the IRWST to the reactor coolant system with a break in one of the direct vessel injection lines
Success Configuration	IRWST injection into the reactor coolant system through 1 out of 2 check valve/squib valve paths (with 1 check valve and 1 squib valve per path) in 1 out of 1 gravity injection lines
System Initial Status	IRWST/gravity injection subsystem is passive; the motor-operated isolation valve (PXS-V121A) on gravity injection line A is normally open; check valves (V122A and V124A) are closed; squib valves (V123A and 125A) are closed
Mission Time	24 hours
Components Required to Change Status	Squib valves on gravity injection line A must open on low CMT level signal or manually; check valves on gravity injection line A must open when reactor pressure drops below operating pressure of the IRWST
Initiating Signals	None
Operator Actions	Manual actuation of IRWST gravity injection squib valves, if automatic actuation fails; – basic event: ADN-MAN01 performed through PMS – basic event: REC-MANDAS performed through DAS

Table 12-2j

FAULT TREE "IWF" SUCCESS CRITERIA SUMMARY

Event Description	Failure of recirculation flow paths to deliver water from the IRWST to the reactor cavity following core damage
Success Configuration	1 out of 2 recirculation flow paths (with 1 motor-operated valve and 1 squib valve per path) must open to deliver water
System Initial Status	Motor-operated valves (V117A/B) on recirculation lines are closed; check valves (V119A/B) are closed; squib valves (V118A/B and V120A/B) are closed
Mission Time	24 hours
Components Required to Change Status	Motor-operated valve and squib valve in each recirculation train must open
Initiating Signals	None
Operator Actions	Operator must recognize the need and open the recirculation motor-operated and squib valves to flood reactor cavity after a severe accident; basic event REN-MAN03 performed through PMS

Table 12-2k

FAULT TREE "RECIRC" SUCCESS CRITERIA SUMMARY

Event Description	Failure of recirculation lines to deliver water from the containment sump to the reactor coolant system following a transient or LOCA, given the success of IRWST/gravity injection and success of containment isolation
Success Configuration	Flow from containment sump (via opening of either the squib valve flow path or the check valve/squib valve flow path) to the RCS (via the opening of either check valve/squib valve flow path) through 1 out of 4 gravity injection/recirculation lines.
System Initial Status	Check valves (V119A/B) and squib valves (V118A/B and V120A/B) are closed, motor-operated valves (V117A/B) on recirculation lines are open
Mission Time	24 hours
Components Required to Change Status	Squib valve, or check valve and squib valve in each recirculation train must open
Initiating Signals	Low-3 IRWST water level and ADS signal
Operator Actions	Manual opening of the recirculation squib valves if they fail to automatically open; basic event REN-MAN02 performed through PMS Manual opening of recirculation squib valves (in the check valve paths) if they fail to open automatically; – basic event: REC-MANDAS performed through DAS Manual actuation of sump recirculation if IRWST low-3 water level signal fails; – basic event REN-MAN04 performed through PMS (primary cue to the operator is: increasing containment sump level; secondary cues are: low RCS pressure, and IRWST injection check valves indicating open operation)

Notes:
1. The squib valves (in the MOV paths) are manually actuated through the PMS only.
2. The squib valves in the check valve paths are manually actuated through the PMS or DAS.

Table 12-21

FAULT TREE "RECIRCP" SUCCESS CRITERIA SUMMARY

Event Description	Failure of recirculation lines to deliver water from the containment sump to the reactor coolant system following a transient or LOCA, given the success of IRWST/gravity injection and success of containment isolation with loss of offsite power
Success Configuration	Flow from containment sump (via opening of either the squib valve flow path or the check valve/squib valve flow path) to the RCS (via the opening of either check valve/squib valve flow path) through 1 out of 4 gravity injection/recirculation lines.
System Initial Status	Check valves (V119A/B) and squib valves (V118A/B and V120A/B) are closed, motor-operated valves (V117A/B) on recirculation lines are open
Mission Time	24 hours
Components Required to Change Status	Squib valve, or check valve and squib valve in each recirculation train must open
Initiating Signals	Low-3 IRWST water level and ADS signal
Operator Actions	Manual opening of the recirculation squib valves if they fail to automatically open; basic event REN-MAN02 performed through PMS Manual opening of recirculation squib valves (in the check valve paths) if they fail to open automatically; – basic event: REC-MANDAS performed through DAS Manual actuation of sump recirculation if IRWST low-3 water level signal fails; – basic event REN-MAN04 performed through PMS (primary cue to the operator is: increasing containment sump level; secondary cues are: low RCS pressure, and IRWST injection check valves indicating open operation)

Notes:
1. The squib valves (in the MOV paths) are manually actuated through the PMS only.
2. The squib valves in the check valve paths are manually actuated through the PMS or DAS.

Table 12-2m

FAULT TREE "RECIRCB" SUCCESS CRITERIA SUMMARY

Event Description	Failure of recirculation lines to deliver water from the containment sump to the reactor coolant system following a transient or LOCA, given the success of IRWST/gravity injection and success of containment isolation with station black out
Success Configuration	Flow from containment sump (via opening of either the squib valve flow path or the check valve/squib valve flow path) to the RCS (via the opening of either check valve/squib valve flow path) through 1 out of 4 gravity injection/recirculation lines.
System Initial Status	Check valves (V119A/B) and squib valves (V118A/B and V120A/B) are closed, motor-operated valves (V117A/B) on recirculation lines are open
Mission Time	24 hours
Components Required to Change Status	Squib valve, or check valve and squib valve in each recirculation train must open
Initiating Signals	Low-3 IRWST water level and ADS signal
Operator Actions	Manual opening of the recirculation squib valves if they fail to automatically open; basic event REN-MAN02 performed through PMS Manual opening of recirculation squib valves (in the check valve paths) if they fail to open automatically; – basic event: REC-MANDAS performed through DAS Manual actuation of sump recirculation if IRWST low-3 water level signal fails; – basic event REN-MAN04 performed through PMS (primary cue to the operator is: increasing containment sump level; secondary cues are: low RCS pressure, and IRWST injection check valves indicating open operation)

Notes:
1. The squib valves (in the MOV paths) are manually actuated through the PMS only.
2. The squib valves in the check valve paths are manually actuated through the PMS or DAS.

Table 12-2n

FAULT TREE "RECIRC1" SUCCESS CRITERIA SUMMARY

Event Description	Failure of recirculation lines to deliver water from the containment sump to the reactor coolant system following a transient or LOCA, given the success of IRWST/gravity injection and failure of containment isolation
Success Configuration	Flow from containment sump (via opening of either the squib valve flow path or the check valve/squib valve flow path) to the RCS (via the opening of either check valve/squib valve flow path) through 2 out of 4 recirculation lines and 1 out of 4 gravity injection/recirculation lines.
System Initial Status	Check valves (V119A/B) and squib valves (V118A/B and V120A/B) are closed, motor-operated valves (V117A/B) on recirculation lines are open
Mission Time	24 hours
Components Required to Change Status	Squib valve, or check valve and squib valve in each recirculation train must open
Initiating Signals	Low-3 IRWST water level and ADS signal
Operator Actions	Manual opening of the recirculation squib valves if they fail to automatically open; basic event REN-MAN02 performed through PMS Manual opening of recirculation squib valves (in the check valve paths) if they fail to open automatically; – basic event: REC-MANDAS performed through DAS Manual actuation of sump recirculation if IRWST low-3 water level signal fails; – basic event REN-MAN04 performed through PMS (primary cue to the operator is: increasing containment sump level; secondary cues are: low RCS pressure, and IRWST injection check valves indicating open operation)

Notes:
1. The squib valves (in the MOV paths) are manually actuated through the PMS only.
2. The squib valves in the check valve paths are manually actuated through the PMS or DAS.

Table 12-2o

FAULT TREE "RECIRC1P" SUCCESS CRITERIA SUMMARY

Event Description	Failure of recirculation lines to deliver water from the containment sump to the reactor coolant system following a transient or LOCA, given the success of IRWST/gravity injection and failure of containment isolation with loss of offsite power
Success Configuration	Flow from containment sump (via opening of either the squib valve flow path or the check valve/squib valve flow path) to the RCS (via the opening of either check valve/squib valve flow path) through 2 out of 4 recirculation lines and 1 out of 4 gravity injection/recirculation lines.
System Initial Status	Check valves (V119A/B) and squib valves (V118A/B and V120A/B) are closed, motor-operated valves (V117A/B) on recirculation lines are open
Mission Time	24 hours
Components Required to Change Status	Squib valve, or check valve and squib valve in each recirculation train must open
Initiating Signals	Low-3 IRWST water level and ADS signal
Operator Actions	Manual opening of the recirculation squib valves if they fail to automatically open; basic event REN-MAN02 performed through PMS Manual opening of recirculation squib valves (in the check valve paths) if they fail to open automatically; – basic event: REC-MANDAS performed through DAS Manual actuation of sump recirculation if IRWST low-3 water level signal fails; – basic event REN-MAN04 performed through PMS (primary cue to the operator is: increasing containment sump level; secondary cues are: low RCS pressure, and IRWST injection check valves indicating open operation)

Notes:
1. The squib valves (in the MOV paths) are manually actuated through the PMS only.
2. The squib valves in the check valve paths are manually actuated through the PMS or DAS.

Table 12-2p

FAULT TREE "RECIRC1B" SUCCESS CRITERIA SUMMARY

Event Description	Failure of recirculation lines to deliver water from the containment sump to the reactor coolant system following a transient or LOCA, given the success of IRWST/gravity injection and failure of containment isolation with station black out
Success Configuration	Flow from containment sump (via opening of either the squib valve flow path or the check valve/squib valve flow path) to the RCS (via the opening of either check valve/squib valve flow path) through 2 out of 4 recirculation lines and 1 out of 4 gravity injection/recirculation lines.
System Initial Status	Check valves (V119A/B) and squib valves (V118A/B and V120A/B) are closed, motor-operated valves (V117A/B) on recirculation lines are open
Mission Time	24 hours
Components Required to Change Status	Squib valve, or check valve and squib valve in each recirculation train must open
Initiating Signals	Low-3 IRWST water level and ADS signal
Operator Actions	Manual opening of the recirculation squib valves if they fail to automatically open; basic event REN-MAN02 performed through PMS Manual opening of recirculation squib valves (in the check valve paths) if they fail to open automatically; – basic event: REC-MANDAS performed through DAS Manual actuation of sump recirculation if IRWST low-3 water level signal fails; – basic event REN-MAN04 performed through PMS (primary cue to the operator is: increasing containment sump level; secondary cues are: low RCS pressure, and IRWST injection check valves indicating open operation)

Notes:
1. The squib valves (in the MOV paths) are manually actuated through the PMS only.
2. The squib valves in the check valve paths are manually actuated through the PMS or DAS.

Table 12-3

SYSTEM DEPENDENCY MATRIX

Systems/ Components	Supporting Systems										
	125 vdc Class 1E								Actuation		
	IDSA-DK-1	IDSA-DD-1	IDSB-DK-1	IDSB-DD-1	IDSC-DK-1	IDSC-DD-1	IDSD-DK-1	IDSD-DD-1	PMS MAN	PMS AUTO	DAS AUTO/MAN
MOVs											
PXS-V117A			X	X					X	X	
PXS-V117B	X	X					X	X	X	X	
SQUIBS											
PXS-V118A				X					X	X	X
PXS-V118B		X							X	X	X
PXS-V120A								X	X	X	X
PXS-V120B						X			X	X	X
PXS-V123A				X					X	X	X
PXS-V123B		X							X	X	X
PXS-V125A								X	X	X	
PXS-V125B						X			X	X	

Table 12-4

COMPONENT TEST ASSUMPTIONS

Component	Test Frequency
Motor-operated valves	
PXS-V117A&B	3 months
PXS-V121A&B	24 months (2)
Check valves	
PXS-V119A&B	24 months (1)
PXS-V122A&B	24 months (1)
PXS-V124A&B	24 months (1)
Squib valves	
PXS-V118A&B	24 months (3)
PXS-V120A&B	24 months (3)
PXS-V123A&B	24 months (3)
PXS-V125A&B	24 months (3)

Notes:
1. Flow test at refueling
2. Stroke test performed at refueling, just prior to entering mid-loop operation. Valve status is verified to be open every 24 hours
3. Tested at refueling

Table 12-5

COMPONENT MAINTENANCE ASSUMPTIONS

Component(s) Identification Type/Name	Expected Frequency of Maintenance	Components Aligned Away From Emergency Position W/O Automatic Return Logic	Components Not Verified By Surveillance Test After Maintenance	Expected Outage Time for Maintenance
(None Identified)				

Note:
1. No scheduled maintenance is defined for the IRWST/gravity injection subsystem. It is assumed that, if maintenance of the IRWST/gravity injection subsystem is required, such maintenance will be performed during refueling operations. Unavailability of MOVs PXS-V117A and B due to test or unscheduled maintenance is modeled in the fault trees for containment sump recirculation.

Table 12-6

FAILURE PROBABILITIES CALCULATED

SIMON.DAT Line Number	Event ID	Description	Failure Probability
(None Identified)			

Table 12-7

OPERATOR ACTIONS AND MISPOSITION ANALYSIS SUMMARY

Event Name	Description
ADN-MAN01	Operator fails to open ADS fourth stage and IRWST injection squib valves if automatic actuation fails
REC-MANDAS	Operator fails to actuate manual DAS ESF functions
REN-MAN02	Operator fails to recognize the need and open recirculation motor-operated valve and squib valves, if automatic actuation fails, given Low-3 IRWST water level in coincidence with ADS signal
REN-MAN03	Operator fails to recognize the need and open recirculation motor-operated valves to flood reactor cavity after a severe accident damage
REN-MAN04	Operator fails to actuate manual sump recirculation if IRWST low-3 water level signal fails

Note:

1. The operator actions are modeled in the instrumentation and control sub-trees for the IRWST/gravity injection subsystem.

Table 12-8

COMMON CAUSE FAILURE ANALYSIS SUMMARY

Event Name	Description
IWX-CV-AO	CCF of check valves in both IRWST injection trains; this CCF addresses 4 CVs on both IRWST injection trains
IWX-CV1-AO	CCF of check valves in one IRWST injection train; this CCF addresses 2 CVs
IWX-EV-SA	CCF of four HP squib valves in both IRWST injection trains and two HP squib valves in recirculation lines (V120A and 120B)
IWX-EV1-SA	CCF of HP squib valves in one IRWST injection train; this CCF addresses 2 squib valves (V123A and 125A)
IWX-EV2-SA	CCF of HP squib valves in both recirculation trains; this CCF addresses 2 squib valves (V120A and 120B)
IWX-EV3-SA	CCF of 3 out of 6 IRWST squib valves
IWX-EV4-SA	CCF of LP squib valves in both recirculation trains; this CCF addresses 2 squib valves (V118A and 118B)
IWX-FL-GP	CCF of IRWST tank strainers plugging
IWX-MV-GO	CCF of motor-operated valves in both recirculation trains; this CCF addresses 2 MOVs
REX-FL-GP	CCF of IRWST recirculation sump strainers plugging.

Table 12-9 (Sheet 1 of 11)

FAULT TREE BASIC EVENTS

FT IDENT	FAILURE MODE	FAIL RATE	VARIANCE	SOURCE	TIME	PROBABILITY	VARIANCE
IRWMOD01	MOV FAILURE TO OPEN	1.00E-05	0.00E+00	EPRI	1.10E+03	1.10E-02	0.00E+00
	CIRCUIT BREAKER (<600V) FAILURE TO CLOSE	1.00E-03	0.00E+00	EPRI	0.00E+00	1.00E-03	0.00E+00
	SOLID STATE RELAY FAILS TO OPERATE	1.00E-07	0.00E+00	SEC3	1.10E+03	1.10E-04	0.00E+00
	TOTAL					1.20E-02	0.00E+00
IRWMOD02	MOV FAILURE TO OPEN	1.00E-05	0.00E+00	EPRI	1.10E+03	1.10E-02	0.00E+00
	CIRCUIT BREAKER (<600V) FAILURE TO CLOSE	1.00E-03	0.00E+00	EPRI	0.00E+00	1.00E-03	0.00E+00
	SOLID STATE RELAY FAILS TO OPERATE	1.00E-07	0.00E+00	SEC3	1.10E+03	1.10E-04	0.00E+00
	TOTAL					1.20E-02	0.00E+00
IRWMOD03	MOV FAILURE TO OPEN	1.00E-05	0.00E+00	EPRI	1.10E+03	1.10E-02	0.00E+00
	CIRCUIT BREAKER (<600V) FAILURE TO CLOSE	1.00E-03	0.00E+00	EPRI	0.00E+00	1.00E-03	0.00E+00
	SOLID STATE RELAY FAILS TO OPERATE	1.00E-07	0.00E+00	SEC3	1.10E+03	1.10E-04	0.00E+00
	TOTAL					1.20E-02	0.00E+00
IRWMOD04	MOV FAILURE TO OPEN	1.00E-05	0.00E+00	EPRI	1.10E+03	1.10E-02	0.00E+00
	CIRCUIT BREAKER (<600V) FAILURE TO CLOSE	1.00E-03	0.00E+00	EPRI	0.00E+00	1.00E-03	0.00E+00
	SOLID STATE RELAY FAILS TO OPERATE	1.00E-07	0.00E+00	SEC3	1.10E+03	1.10E-04	0.00E+00
	TOTAL					1.20E-02	0.00E+00

Table 12-9 (Sheet 2 of 11)

FAULT TREE BASIC EVENTS

FT IDENT	FAILURE MODE	FAIL RATE	VARIANCE	SOURCE	TIME	PROBABILITY	VARIANCE
IRWMOD05	EXPLOSIVE VALVE FAILURE TO OPERATE	5.80E-04	0.00E+00	SEC3	0.00E+00	5.80E-04	0.00E+00
	SOLID STATE RELAY FAILS TO OPERATE	1.00E-07	0.00E+00	SEC3	8.76E+03	8.76E-04	0.00E+00
	TOTAL					1.46E-03	0.00E+00
IRWMOD06	EXPLOSIVE VALVE FAILURE TO OPERATE	5.80E-04	0.00E+00	SEC3	0.00E+00	5.80E-04	0.00E+00
	SOLID STATE RELAY FAILS TO OPERATE	1.00E-07	0.00E+00	SEC3	8.76E+03	8.76E-04	0.00E+00
	TOTAL					1.46E-03	0.00E+00
IRWMOD07	EXPLOSIVE VALVE FAILURE TO OPERATE	5.80E-04	0.00E+00	SEC3	0.00E+00	5.80E-04	0.00E+00
	SOLID STATE RELAY FAILS TO OPERATE	1.00E-07	0.00E+00	SEC3	8.76E+03	8.76E-04	0.00E+00
	TOTAL					1.46E-03	0.00E+00
IRWMOD08	EXPLOSIVE VALVE FAILURE TO OPERATE	5.80E-04	0.00E+00	SEC3	0.00E+00	5.80E-04	0.00E+00
	SOLID STATE RELAY FAILS TO OPERATE	1.00E-07	0.00E+00	SEC3	8.76E+03	8.76E-04	0.00E+00
	TOTAL					1.46E-03	0.00E+00
IRWMOD09	EXPLOSIVE VALVE FAILURE TO OPERATE	5.80E-04	0.00E+00	SEC3	0.00E+00	5.80E-04	0.00E+00
	SOLID STATE RELAY FAILS TO OPERATE	1.00E-07	0.00E+00	SEC3	8.76E+03	8.76E-04	0.00E+00
	TOTAL					1.46E-03	0.00E+00

Table 12-9 (Sheet 3 of 11)

FAULT TREE BASIC EVENTS

FT IDENT	FAILURE MODE	FAIL RATE	VARIANCE	SOURCE	TIME	PROBABILITY	VARIANCE
IRWMOD10	EXPLOSIVE VALVE FAILURE TO OPERATE	5.80E-04	0.00E+00	SEC3	0.00E+00	5.80E-04	0.00E+00
	SOLID STATE RELAY FAILS TO OPERATE	1.00E-07	0.00E+00	SEC3	8.76E+03	8.76E-04	0.00E+00
	TOTAL					1.46E-03	0.00E+00
IRWMOD11	EXPLOSIVE VALVE FAILURE TO OPERATE	5.80E-04	0.00E+00	SEC3	0.00E+00	5.80E-04	0.00E+00
	SOLID STATE RELAY FAILS TO OPERATE	1.00E-07	0.00E+00	SEC3	8.76E+03	8.76E-04	0.00E+00
	TOTAL					1.46E-03	0.00E+00
IRWMOD12	EXPLOSIVE VALVE FAILURE TO OPERATE	5.80E-04	0.00E+00	SEC3	0 00E+00	5.80E-04	0.00E+00
	SOLID STATE RELAY FAILS TO OPERATE	1.00E-07	0.00E+00	SEC3	8.76E+03	8.76E-04	0.00E+00
	TOTAL					1.46E-03	0.00E+00
IWA-PLUG	STRAINER/FILTER PLUGGED	1.00E-05	0.00E+00	EPRI	2.40E+01	2.40E-04	0.00E+00
IWACV122AO	CHECK VALVE FAILURE TO OPEN	2.00E-07	0.00E+00	SEC3	8.76E+03	1.75E-03	0.00E+00
IWACV123AO	CHECK VALVE FAILURE TO OPEN	2.00E-07	0.00E+00	SEC3	8.76E+03	1.75E-03	0.00E+00
IWACV124AO	CHECK VALVE FAILURE TO OPEN	2.00E-07	0.00E+00	SEC3	8.76E+03	1.75E-03	0.00E+00
IWACV125AO	CHECK VALVE FAILURE TO OPEN	2.00E-07	0.00E+00	SEC3	8.76E+03	1.75E-03	0.00E+00
IWARS118BFA	SOLID STATE RELAY FAILS TO OPERATE	1.00E-07	0.00E+00	SEC3	8.76E+03	8.76E-04	0.00E+00
IWARS123BFA	SOLID STATE RELAY FAILS TO OPERATE	1.00E-07	0.00E+00	SEC3	8.76E+03	8.76E-04	0.00E+00
IWB-PLUG	STRAINER/FILTER PLUGGED	1.00E-05	0.00E+00	EPRI	2.40E+01	2.40E-04	0.00E+00

Table 12-9 (Sheet 4 of 11)

FAULT TREE BASIC EVENTS

FT IDENT	FAILURE MODE	FAIL RATE	VARIANCE	SOURCE	TIME	PROBABILITY	VARIANCE
IWBCV122AO	CHECK VALVE FAILURE TO OPEN	2.00E-07	0.00E+00	SEC3	8.76E+03	1.75E-03	0.00E+00
IWBCV123AO	CHECK VALVE FAILURE TO OPEN	2.00E-07	0.00E+00	SEC3	8.76E+03	1.75E-03	0.00E+00
IWBCV124AO	CHECK VALVE FAILURE TO OPEN	2.00E-07	0.00E+00	SEC3	8.76E+03	1.75E-03	0.00E+00
IWBCV125AO	CHECK VALVE FAILURE TO OPEN	2.00E-07	0.00E+00	SEC3	8.76E+03	1.75E-03	0.00E+00
IWBRS118AFA	SOLID STATE RELAY FAILS TO OPERATE	1.00E-07	0.00E+00	SEC3	8.76E+03	8.76E-04	0.00E+00
IWBRS123AFA	SOLID STATE RELAY FAILS TO OPERATE	1.00E-07	0.00E+00	SEC3	8.76E+03	8.76E-04	0.00E+00
IWCRS120BFA	SOLID STATE RELAY FAILS TO OPERATE	1.00E-07	0.00E+00	SEC3	8.76E+03	8.76E-04	0.00E+00
IWCRS125BFA	SOLID STATE RELAY FAILS TO OPERATE	1.00E-07	0.00E+00	SEC3	8.76E+03	8.76E-04	0.00E+00
IWDRS120AFA	SOLID STATE RELAY FAILS TO OPERATE	1.00E-07	0.00E+00	SEC3	8.76E+03	8.76E-04	0.00E+00
IWDRS125AFA	SOLID STATE RELAY FAILS TO OPERATE	1.00E-07	0.00E+00	SEC3	8.76E+03	8.76E-04	0.00E+00
IWX-CV-AO	CCF OF 4 OF 4 IRWST INJECTION CHECK VALVES TO OPEN (I-WX-CV-AO)	3.00E-05	0.00E+00	CCF	0.00E+00	3.00E-05	0.00E+00
IWX-CV1-AO	CCF OF 2 OF 4 (V122A & V124A) IWRST INJECTION CHECK VALVES TO OPEN (IWX-CV1-AO)	5.40E-07	0.00E+00	CCF	0.00E+00	5.40E-07	0.00E+00
IWX-EV-SA	CCF OF 4 OF 4 IRWST INJECTION SQUIB VALVES TO OPEN (IWX-EV-SA)	2.60E-05	0.00E+00	CCF	0.00E+00	2.60E-05	0.00E+00
IWX-EV1-SA	CCF OF 2 OF 4 (V123A & V125A) IRWST INJECTION SQUIB VALVES (IWX-EV1-SA)	1.00E-05	0.00E+00	CCF	0.00E+00	1.00E-05	0.00E+00

Table 12-9 (Sheet 5 of 11)

FAULT TREE BASIC EVENTS

FT IDENT	FAILURE MODE	FAIL RATE	VARIANCE	SOURCE	TIME	PROBABILITY	VARIANCE
IWX-EV2-SA	CCF OF 2 OF 4 (V118A & V118B) SUMP RECIRC. SQUIB VALVES (IWX-EV2-SA)	1.00E-05	0.00E+00	CCF	0.00E+00	1.00E-05	0.00E+00
IWX-EV3-SA	CCF OF 2 OF 2 (V118B & V120B) SUMP RECIRC. SQUIB VALVES (IWX-EV3-SA)	1.00E-05	0.00E+00	CCF	0.00E+00	1.00E-05	0.00E+00
IWX-EV4-SA	CCF OF 4 OF 4 SUMP RECIRC. SQUIB VALVES (IWX.EV4-SA)	2.60E-05	0.00E+00	CCF	0.00E+00	2.60E-05	0.00E+00
IWX-FL-GP	CCF OF BOTH IRWST INJECTION OR BOTH IRWST RECIRC. LINES - STRAINER PLUGGING (IWX-FL-GP OR REX-FL-GP)	1.20E-05	0.00E+00	CCF	0.00E+00	1.20E-05	0.00E+00
IWX-MV-GO	CCF OF 2 OF 2 SUMP RECIRC. MOVs TO OPEN (IWX-MV-GO)	4.40E-03	0.00E+00	CCF	0.00E+00	4.40E-03	0.00E+00
IWX-PLUG	CCF OF IRWST ACCUMULATOR ORIFICES OR LINES TO PLUG (IWX-PLUG)	7.30E-05	0.00E+00	CCF	0.00E+00	7.30E-05	0.00E+00
REA-PLUG	STRAINER/FILTER PLUGGED	1.00E-05	0.00E+00	EPRI	2.40E+01	2.40E-04	0.00E+00
REACV119GO	CHECK VALVE FAILURE TO OPEN	2.00E-07	0.00E+00	SEC3	8.76E+03	1.75E-03	0.00E+00
REACV120GO	CHECK VALVE FAILURE TO OPEN	2.00E-07	0.00E+00	SEC3	8.76E+03	1.75E-03	0.00E+00
REAMOV117TM	SAFETY-RELATED SYSTEM MAJOR COMPONENT T&M UNAVAILABILITY (PUMPS, VALVES)	5.00E-04	0.00E+00	EPRI	0.00E+00	5.00E-04	0.00E+00
REAMOV118TM	SAFETY-RELATED SYSTEM MAJOR COMPONENT T&M UNAVAILABILITY (PUMPS, VALVES)	5.00E-04	0.00E+00	EPRI	0.00E+00	5.00E-04	0.00E+00

Table 12-9 (Sheet 6 of 11)

FAULT TREE BASIC EVENTS

FT IDENT	FAILURE MODE	FAIL RATE	VARIANCE	SOURCE	TIME	PROBABILITY	VARIANCE
REB-PLUG	STRAINER/FILTER PLUGGED	1.00E-05	0.00E+00	EPRI	2.40E+01	2.40E-04	0.00E+00
REBCV119GO	CHECK VALVE FAILURE TO OPEN	2.00E-07	0.00E+00	SEC3	8.76E+03	1.75E-03	0.00E+00
REBCV120GO	CHECK VALVE FAILURE TO OPEN	2.00E-07	0.00E+00	SEC3	8.76E+03	1.75E-03	0.00E+00
REBMOV117TM	SAFETY-RELATED SYSTEM MAJOR COMPONENT T&M UNAVAILABILITY (PUMPS, VALVES)	5.00E-04	0.00E+00	EPRI	0.00E+00	5.00E-04	0.00E+00
REBMOV118TM	SAFETY-RELATED SYSTEM MAJOR COMPONENT T&M UNAVAILABILITY (PUMPS, VALVES)	5.00E-04	0.00E+00	EPRI	0.00E+00	5.00E-04	0.00E+00
REN-MAN03	OPER. FAILS TO RECOGNIZE NEED D FAILS TO OPEN RECIRC. VALVES AFTER CORE DAMAGE (REN-MAN03)	3.40E-03	0.00E+00	HRA	0.00E+00	3.40E-03	0.00E+00
REX-FL-GP	CCF OF BOTH IRWST INJECTION OR BOTH IRWST RECIRC. LINES - STRAINER PLUGGING (IWX-FL-GP OR REX-FL-GP)	1.20E-05	0.00E+00	CCF	0.00E+00	1.20E-05	0.00E+00
RHN-MAN06	OPERATOR FAILS TO PERFORM CONTROLLED RNS FLOW GIVEN 1/2 RECIRC. PATHS FAILS TO OPEN (RHN-MAN06)	3.75E-03	0.00E+00	HRA	0.00E+00	3.75E-03	0.00E+00
SUB-IDADD1	PROBABILITY FOR SUB- BASIC EVENTS	1.00E-01	0.00E+00	SUB-	0.00E+00	1.00E-01	0.00E+00
SUB-IDADD1B	PROBABILITY FOR SUB- BASIC EVENTS	1.00E-01	0.00E+00	SUB-	0.00E+00	1.00E-01	0.00E+00
SUB-IDADD1P	PROBABILITY FOR SUB- BASIC EVENTS	1.00E-01	0.00E+00	SUB-	0.00E+00	1.00E-01	0.00E+00

Table 12-9 (Sheet 7 of 11)

FAULT TREE BASIC EVENTS

FT IDENT	FAILURE MODE	FAIL RATE	VARIANCE	SOURCE	TIME	PROBABILITY	VARIANCE
SUB-IDADK1	PROBABILITY FOR SUB- BASIC EVENTS	1.00E-01	0.00E+00	SUB-	0.00E+00	1.00E-01	0.00E+00
SUB-IDADK1B	PROBABILITY FOR SUB- BASIC EVENTS	1.00E-01	0.00E+00	SUB-	0.00E+00	1.00E-01	0.00E+00
SUB-IDADK1P	PROBABILITY FOR SUB- BASIC EVENTS	1.00E-01	0.00E+00	SUB-	0.00E+00	1.00E-01	0.00E+00
SUB-IDBDD1	PROBABILITY FOR SUB- BASIC EVENTS	1.00E-01	0.00E+00	SUB-	0.00E+00	1.00E-01	0.00E+00
SUB-IDBDD1B	PROBABILITY FOR SUB- BASIC EVENTS	1.00E-01	0.00E+00	SUB-	0.00E+00	1.00E-01	0.00E+00
SUB-IDBDD1P	PROBABILITY FOR SUB- BASIC EVENTS	1.00E-01	0.00E+00	SUB-	0.00E+00	1.00E-01	0.00E+00
SUB-IDBDK1	PROBABILITY FOR SUB- BASIC EVENTS	1.00E-01	0.00E+00	SUB-	0.00E+00	1.00E-01	0.00E+00
SUB-IDBDK1B	PROBABILITY FOR SUB- BASIC EVENTS	1.00E-01	0.00E+00	SUB-	0.00E+00	1.00E-01	0.00E+00
SUB-IDBDK1P	PROBABILITY FOR SUB- BASIC EVENTS	1.00E-01	0.00E+00	SUB-	0.00E+00	1.00E-01	0.00E+00
SUB-IDCDD1	PROBABILITY FOR SUB- BASIC EVENTS	1.00E-01	0.00E+00	SUB-	0.00E+00	1.00E-01	0.00E+00
SUB-IDCDD1B	PROBABILITY FOR SUB- BASIC EVENTS	1.00E-01	0.00E+00	SUB-	0.00E+00	1.00E-01	0.00E+00
SUB-IDCDD1P	PROBABILITY FOR SUB- BASIC EVENTS	1.00E-01	0.00E+00	SUB-	0.00E+00	1.00E-01	0.00E+00
SUB-IDCDK1	PROBABILITY FOR SUB- BASIC EVENTS	1.00E-01	0.00E+00	SUB-	0.00E+00	1.00E-01	0.00E+00
SUB-IDCDK1B	PROBABILITY FOR SUB- BASIC EVENTS	1.00E-01	0.00E+00	SUB-	0.00E+00	1.00E-01	0.00E+00
SUB-IDCDK1P	PROBABILITY FOR SUB- BASIC EVENTS	1.00E-01	0.00E+00	SUB-	0.00E+00	1.00E-01	0.00E+00
SUB-IDDDD1	PROBABILITY FOR SUB- BASIC EVENTS	1.00E-01	0.00E+00	SUB-	0.00E+00	1.00E-01	0.00E+00
SUB-IDDDD1B	PROBABILITY FOR SUB- BASIC EVENTS	1.00E-01	0.00E+00	SUB-	0.00E+00	1.00E-01	0.00E+00

Table 12-9 (Sheet 8 of 11)

FAULT TREE BASIC EVENTS

FT IDENT	FAILURE MODE	FAIL RATE	VARIANCE	SOURCE	TIME	PROBABILITY	VARIANCE
SUB-IDDDD1P	PROBABILITY FOR SUB- BASIC EVENTS	1.00E-01	0.00E+00	SUB-	0.00E+00	1.00E-01	0.00E+00
SUB-IDDDK1	PROBABILITY FOR SUB- BASIC EVENTS	1.00E-01	0.00E+00	SUB-	0.00E+00	1.00E-01	0.00E+00
SUB-IDDDK1B	PROBABILITY FOR SUB- BASIC EVENTS	1.00E-01	0.00E+00	SUB-	0.00E+00	1.00E-01	0.00E+00
SUB-IDDDK1P	PROBABILITY FOR SUB- BASIC EVENTS	1.00E-01	0.00E+00	SUB-	0.00E+00	1.00E-01	0.00E+00
SUB-IRW-IC1	PROBABILITY FOR SUB- BASIC EVENTS	1.00E-01	0.00E+00	SUB-	0.00E+00	1.00E-01	0.00E+00
SUB-IRW-IC10	PROBABILITY FOR SUB- BASIC EVENTS	1.00E-01	0.00E+00	SUB-	0.00E+00	1.00E-01	0.00E+00
SUB-IRW-IC11	PROBABILITY FOR SUB- BASIC EVENTS	1.00E-01	0.00E+00	SUB-	0.00E+00	1.00E-01	0.00E+00
SUB-IRW-IC12	PROBABILITY FOR SUB- BASIC EVENTS	1.00E-01	0.00E+00	SUB-	0.00E+00	1.00E-01	0.00E+00
SUB-IRW-IC13	PROBABILITY FOR SUB- BASIC EVENTS	1.00E-01	0.00E+00	SUB-	0.00E+00	1.00E-01	0.00E+00
SUB-IRW-IC14	PROBABILITY FOR SUB- BASIC EVENTS	1.00E-01	0.00E+00	SUB-	0.00E+00	1.00E-01	0.00E+00
SUB-IRW-IC15	PROBABILITY FOR SUB- BASIC EVENTS	1.00E-01	0.00E+00	SUB-	0.00E+00	1.00E-01	0.00E+00
SUB-IRW-IC16	PROBABILITY FOR SUB- BASIC EVENTS	1.00E-01	0.00E+00	SUB-	0.00E+00	1.00E-01	0.00E+00
SUB-IRW-IC17	PROBABILITY FOR SUB- BASIC EVENTS	1.00E-01	0.00E+00	SUB-	0.00E+00	1.00E-01	0.00E+00
SUB-IRW-IC18	PROBABILITY FOR SUB- BASIC EVENTS	1.00E-01	0.00E+00	SUB-	0.00E+00	1.00E-01	0.00E+00
SUB-IRW-IC19	PROBABILITY FOR SUB- BASIC EVENTS	1.00E-01	0.00E+00	SUB-	0.00E+00	1.00E-01	0.00E+00
SUB-IRW-IC2	PROBABILITY FOR SUB- BASIC EVENTS	1.00E-01	0.00E+00	SUB-	0.00E+00	1.00E-01	0.00E+00
SUB-IRW-IC20	PROBABILITY FOR SUB- BASIC EVENTS	1.00E-01	0.00E+00	SUB-	0.00E+00	1.00E-01	0.00E+00

Table 12-9 (Sheet 9 of 11)

FAULT TREE BASIC EVENTS

FT IDENT	FAILURE MODE	FAIL RATE	VARIANCE	SOURCE	TIME	PROBABILITY	VARIANCE
SUB-IRW-IC21	PROBABILITY FOR SUB- BASIC EVENTS	1.00E-01	0.00E+00	SUB-	0.00E+00	1.00E-01	0.00E+00
SUB-IRW-IC22	PROBABILITY FOR SUB- BASIC EVENTS	1.00E-01	0 00E+00	SUB-	0.00E+00	1.00E-01	0.00E+00
SUB-IRW-IC23	PROBABILITY FOR SUB- BASIC EVENTS	1.00E-01	0.00E+00	SUB-	0.00E+00	1.00E-01	0.00E+00
SUB-IRW-IC24	PROBABILITY FOR SUB- BASIC EVENTS	1.00E-01	0.00E+00	SUB-	0.00E+00	1.00E-01	0.00E+00
SUB-IRW-IC25	PROBABILITY FOR SUB- BASIC EVENTS	1.00E-01	0.00E+00	SUB-	0.00E+00	1.00E-01	0.00E+00
SUB-IRW-IC26	PROBABILITY FOR SUB- BASIC EVENTS	1.00E-01	0.00E+00	SUB-	0.00E+00	1.00E-01	0.00E+00
SUB-IRW-IC27	PROBABILITY FOR SUB- BASIC EVENTS	1.00E-01	0.00E+00	SUB-	0.00E+00	1.00E-01	0.00E+00
SUB-IRW-IC28	PROBABILITY FOR SUB- BASIC EVENTS	1.00E-01	0.00E+00	SUB-	0.00E+00	1.00E-01	0.00E+00
SUB-IRW-IC29	PROBABILITY FOR SUB- BASIC EVENTS	1.00E-01	0.00E+00	SUB-	0.00E+00	1.00E-01	0.00E+00
SUB-IRW-IC3	PROBABILITY FOR SUB- BASIC EVENTS	1.00E-01	0.00E+00	SUB-	0.00E+00	1.00E-01	0.00E+00
SUB-IRW-IC30	PROBABILITY FOR SUB- BASIC EVENTS	1.00E-01	0.00E+00	SUB-	0.00E+00	1.00E-01	0.00E+00
SUB-IRW-IC31	PROBABILITY FOR SUB- BASIC EVENTS	1.00E-01	0.00E+00	SUB-	0.00E+00	1.00E-01	0.00E+00
SUB-IRW-IC32	PROBABILITY FOR SUB- BASIC EVENTS	1.0E-01	0.00E+00	SUB-	0.00E+00	1.00E-01	0.00E+00
SUB-IRW-IC33	PROBABILITY FOR SUB- BASIC EVENTS	1.00E-01	0.00E+00	SUB-	0.00E+00	1.00E-01	0.00E+00
SUB-IRW-IC34	PROBABILITY FOR SUB- BASIC EVENTS	1.00E-01	0.00E+00	SUB-	0.00E+00	1.00E-01	0.00E+00
SUB-IRW-IC35	PROBABILITY FOR SUB- BASIC EVENTS	1.00E-01	0.00E+00	SUB-	0.00E+00	1.00E-01	0.00E+00
SUB-IRW-IC36	PROBABILITY FOR SUB- BASIC EVENTS	1.00E-01	0.00E+00	SUB-	0.00E+00	1.00E-01	0.00E+00

Table 12-9 (Sheet 10 of 11)

FAULT TREE BASIC EVENTS

FT IDENT	FAILURE MODE	FAIL RATE	VARIANCE	SOURCE	TIME	PROBABILITY	VARIANCE
SUB-IRW-IC4	PROBABILITY FOR SUB- BASIC EVENTS	1.00E-01	0.00E+00	SUB-	0.00E+00	1.00E-01	0.00E+00
SUB-IRW-IC5	PROBABILITY FOR SUB- BASIC EVENTS	1.00E-01	0.00E+00	SUB-	0.00E+00	1.00E-01	0.00E+00
SUB-IRW-IC6	PROBABILITY FOR SUB- BASIC EVENTS	1.00E-01	0.00E+00	SUB-	0.00E+00	1.00E-01	0.00E+00
SUB-IRW-IC7	PROBABILITY FOR SUB- BASIC EVENTS	1.00E-01	0.00E+00	SUB-	0.00E+00	1.00E-01	0.00E+00
SUB-IRW-IC8	PROBABILITY FOR SUB- BASIC EVENTS	1.00E-01	0.00E+00	SUB-	00E+00	1.00E-01	0.00E+00
SUB-IRW-IC9	PROBABILITY FOR SUB- BASIC EVENTS	1.00E-01	0.00E+00	SUB-	0.00E+00	1.00E-01	0.00E+00
SUB-IRWIC21A	PROBABILITY FOR SUB- BASIC EVENTS	1.00E-01	0.00E+00	SUB-	0.00E+00	1.00E-01	0.00E+00
SUB-IRWIC21M	PROBABILITY FOR SUB- BASIC EVENTS	1.00E-01	0.00E+00	SUB-	0.00E+00	1.00E-01	0.00E+00
SUB-IRWIC22A	PROBABILITY FOR SUB- BASIC EVENTS	1.00E-01	0.00E+00	SUB-	0.00E+00	1.00E-01	0.00E+00
SUB-IRWIC22M	PROBABILITY FOR SUB- BASIC EVENTS	1.00E-01	0.00E+00	SUB-	0.00E+00	1.00E-01	0.00E+00
SUB-IRWIC23A	PROBABILITY FOR SUB- BASIC EVENTS	1.00E-01	0.00E+00	SUB-	0.00E+00	1.00E-01	0.00E+00
SUB-IRWIC23M	PROBABILITY FOR SUB- BASIC EVENTS	1.00E-01	0.00E+00	SUB-	0.00E+00	1.00E-01	0.00E+00
SUB-IRWIC24A	PROBABILITY FOR SUB- BASIC EVENTS	1.00E-01	0.00E+00	SUB-	0.00E+00	1.00E-01	0.00E+00
SUB-IRWIC24M	PROBABILITY FOR SUB- BASIC EVENTS	1.00E-01	0.00E+00	SUB-	0.00E+00	1.00E-01	0.00E+00
SUB-IRWIC27M	PROBABILITY FOR SUB- BASIC EVENTS	1.00E-01	0.00E+00	SUB-	0.00E+00	1.00E-01	0.00E+00
SUB-IRWIC28M	PROBABILITY FOR SUB- BASIC EVENTS	1.00E-01	0.00E+00	SUB-	0.00E+00	1.00E-01	0.00E+00
SUB-IRWIC29M	PROBABILITY FOR SUB- BASIC EVENTS	1.00E-01	0.00E+00	SUB-	0.00E+00	1.00E-01	0.00E+00

Table 12-9 (Sheet 11 of 11)

FAULT TREE BASIC EVENTS

FT IDENT	FAILURE MODE	FAIL RATE	VARIANCE	SOURCE	TIME	PROBABILITY	VARIANCE
SUB-IRWIC30M	PROBABILITY FOR SUB- BASIC EVENTS	1.00E-01	0.00E+00	SUB-	0.00E+00	1.00E-01	0.00E+00
SUB-IRWIC31M	PROBABILITY FOR SUB- BASIC EVENTS	1.00E-01	0.00E+00	SUB-	0.00E+00	1.00E-01	0.00E+00
SUB-IRWIC32M	PROBABILITY FOR SUB- BASIC EVENTS	1.00E-01	0.00E+00	SUB-	0.00E+0	1.00E-01	0.00E+00
SUB-IRWIC33M	PROBABILITY FOR SUB- BASIC EVENTS	1.00E-01	0.00E+00	SUB-	0.00E+00	1.00E-01	0.00E+00
SUB-IRWIC34M	PROBABILITY FOR SUB- BASIC EVENTS	1.00E-01	0.00E+00	SUB-	00E+00	1.00E-01	0.00E+00

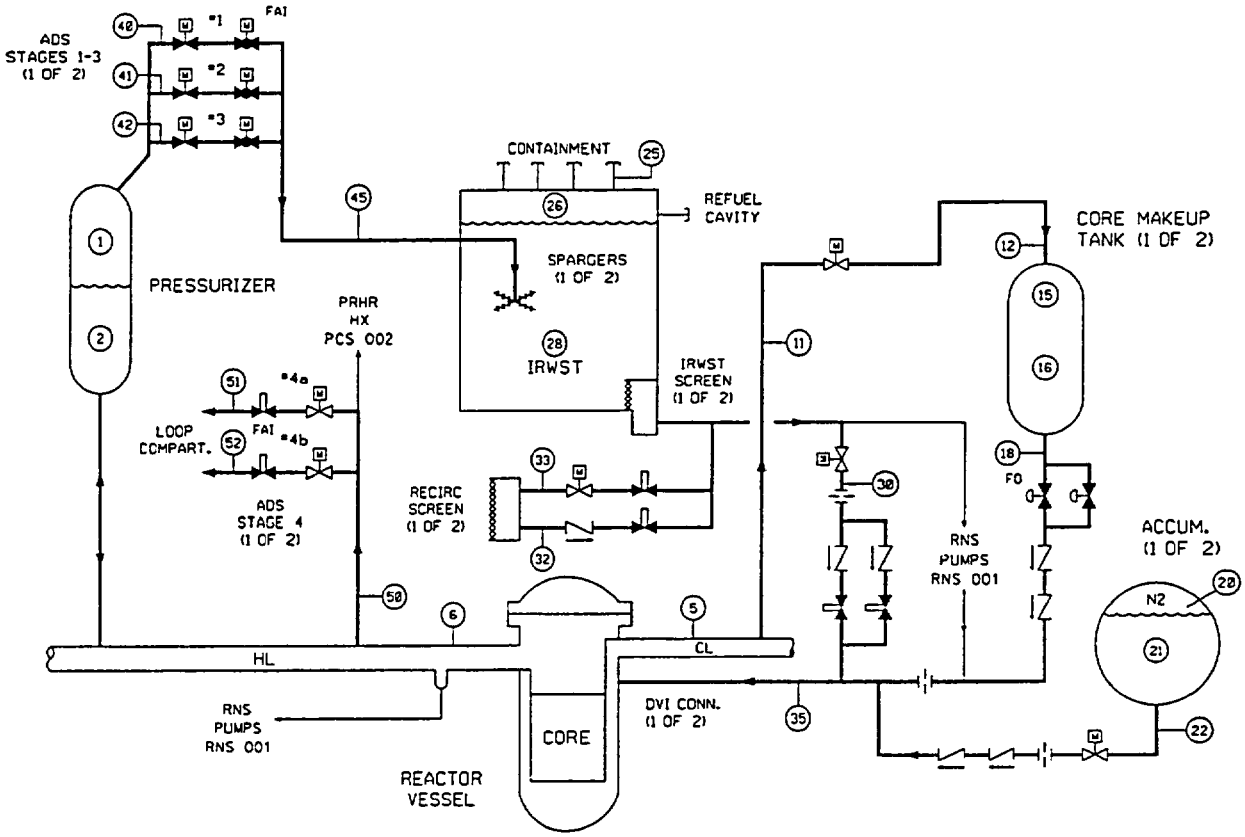

Figure 12-1

Simplified Piping & Instrumentation Diagram of the IRWST/Gravity Injection Subsystem

TABLE OF CONTENTS

Section	Title	Page
	LIST OF TABLES	xxxv
	LIST OF FIGURES	liii
	REVISION 1 CHANGE ROADMAP	ci
CHAPTER 1	INTRODUCTION	
1.1	Introduction	1-1
1.1.1	Background and Overview	1-1
1.1.2	Objectives	1-1
1.1.3	Technical Scope	1-2
1.1.4	Project Methodology Overview	1-3
1.1.5	Results	1-4
1.1.6	Plant Definition	1-6
1.1.7	References	1-6
CHAPTER 2	INTERNAL INITIATING EVENTS	
2.1	Introduction	2-1
2.2	Internal Initiating Event Identification and Categorization	2-1
2.2.1	Logic Diagram for Internal Initiating Events	2-2
2.2.2	Loss-of-Coolant Accidents	2-3
2.2.3	Transients	2-6
2.2.4	Anticipated Transient without Scram	2-8
2.2.5	AP1000 Specific Initiating Event Analysis	2-10
2.2.6	Consequential Events	2-19
2.2.7	Summary of Internal Initiating Event Categories	2-19
2.3	Internal Initiating Event Frequency Quantification	2-20
2.3.1	Quantification of LOCA Initiating Event Frequencies	2-20
2.3.2	Quantification of Transient Initiating Event Frequencies	2-24
2.3.3	ATWS Precursor Initiating Event Frequency	2-27
2.3.4	Summary of Internal Initiating Event Frequencies	2-27
2.4	References	2-27
ATTACHMENT 2A	QUANTIFICATION OF LOCA INITIATING EVENT FREQUENCIES	
2A-1	Primary System Pipe Break Frequencies	2A-1
2A-2	Reactor Cooling System Leakage Initiating Event Frequency	2A-1
2A-3	Steam Generator Tube Rupture Initiating Event Frequency	2A-1
2A-4	Quantification of Stuck-Open Pressurizer Safety Valve, Accumulator Interface Break, and IRWST Interface Break	2A-1
2A-5	Initiating Events Review Data Summary and INPO Data	2A-1
ATTACHMENT 2B	QUANTIFICATION OF TRANSIENT INITIATING EVENT FREQUENCIES	
2B-1	Secondary Side Line Breaks & Stuck-open Main Steam Line Safety Valve Frequencies	2B-1

TABLE OF CONTENTS (cont.)

Section	Title	Page
CHAPTER 3	MODELING OF SPECIAL INITIATORS	
3.1	Introduction	3-1
3.2	Ground Rules for Special Initiating Event Analysis	3-1
3.3	Loss of Component Cooling Water System/Service Water System Initiating Event	3-1
3.4	Loss of Compressed and Instrument Air System Initiating Event	3-2
3.5	Spurious Actuation of Automatic Depressurization System	3-2
3.5.1	Evaluation of Automatic Depressurization System Spurious Actuation	3-3
CHAPTER 4	EVENT TREE MODELS	
4.1	Introduction	4-1
4.2	Large LOCA Event Tree Model	4-1
4.2.1	Event Description	4-1
4.2.2	Event Tree Model and its Nodes	4-2
4.2.3	Event Tree Success Criteria and Core Damage Categories	4-4
4.2.4	Operator Actions	4-4
4.2.5	Transfers and Consequential Events	4-4
4.3	Large Spurious ADS Event Tree Model	4-4
4.3.1	Event Description	4-4
4.3.2	Event Tree Model and its Nodes	4-4
4.3.3	Event Tree Success Criteria and Core Damage Categories	4-6
4.3.4	Operator Actions	4-6
4.3.5	Transfers and Consequential Events	4-6
4.4	Medium LOCA Event Tree Model	4-6
4.4.1	Event Description	4-6
4.4.2	Event Tree Model and its Nodes	4-7
4.4.3	Event Tree Success Criteria and Core Damage Categories	4-9
4.4.4	Operator Actions	4-9
4.4.5	Transfers and Consequential Events	4-10
4.5	Core Makeup Tank Line Break Event Tree Model	4-10
4.5.1	Event Description	4-10
4.5.2	Event Tree Model and its Nodes	4-10
4.5.3	Event Tree Success Criteria and Core Damage Categories	4-13
4.5.4	Operator Actions	4-13
4.5.5	Transfers and Consequential Events	4-13
4.6	Safety Injection Line Break Event Tree Model	4-13
4.6.1	Event Description	4-13
4.6.2	Event Tree Model and its Nodes	4-14
4.6.3	Event Tree Success Criteria and Core Damage Categories	4-16
4.6.4	Operator Actions	4-16
4.6.5	Transfers and Consequential Events	4-17

TABLE OF CONTENTS (cont.)

Section	Title	Page
4.7	Small LOCA Event Tree Model	4-17
4.7.1	Event Description	4-17
4.7.2	Event Tree Model and its Nodes	4-17
4.7.3	Event Tree Success Criteria and Core Damage Categories	4-20
4.7.4	Operator Actions	4-20
4.7.5	Transfers and Consequential Events	4-21
4.8	RCS Leak Event Tree Model	4-21
4.8.1	Event Description	4-21
4.8.2	Event Tree Model and its Nodes	4-21
4.8.3	Event Tree Success Criteria	4-22
4.8.4	Operator Actions	4-22
4.8.5	Transfers and Consequential Events	4-22
4.8.6	Core Damage Categories	4-23
4.9	PRHR Tube Rupture Event Tree Model	4-23
4.9.1	Event Description	4-23
4.9.2	Event Tree Model and its Nodes	4-23
4.9.3	Event Tree Success Criteria	4-24
4.9.4	Operator Actions	4-24
4.9.5	Transfers and Consequential Events	4-24
4.9.6	Core Damage Categories	4-24
4.10	Steam Generator Tube Rupture Event Tree Model	4-25
4.10.1	Event Description	4-25
4.10.2	Event Tree Model and its Nodes	4-27
4.10.3	Event Tree Success Criteria and Core Damage Categories	4-33
4.10.4	Operator Actions	4-33
4.10.5	Transfers and Consequential Events	4-33
4.11	Reactor Vessel Rupture Event Tree Model	4-34
4.11.1	Event Description	4-34
4.11.2	Event Tree Model and its Nodes	4-34
4.11.3	Event Tree Success Criteria	4-34
4.11.4	Operator Actions	4-34
4.11.5	Transfers and Consequential Events	4-34
4.11.6	Core Damage Categories	4-34
4.12	Interfacing System LOCA Event Tree Model	4-34
4.12.1	Event Description	4-34
4.12.2	Event Tree Model and its Nodes	4-35
4.12.3	Event Tree Success Criteria	4-35
4.12.4	Operator Actions	4-35
4.12.5	Transfers and Consequential Events	4-35
4.12.6	Core Damage Categories	4-35

TABLE OF CONTENTS (cont.)

Section	Title	Page
4.13	Transients With MFW Event Tree Model	4-35
4.13.1	Event Description	4-35
4.13.2	Event Tree Model and its Nodes	4-37
4.13.3	Event Tree Success Criteria and Core Damage Categories	4-41
4.13.4	Operator Actions	4-41
4.13.5	Transfers and Consequential Events	4-42
4.14	Transients With Loss of RCS Flow Event Tree Model	4-42
4.14.1	Event Description	4-42
4.14.2	Event Tree Model and its Nodes	4-42
4.14.3	Event Tree Success Criteria and Core Damage Categories	4-46
4.14.4	Operator Actions	4-46
4.14.5	Transfers and Consequential Events	4-46
4.15	Transients With Loss of MFW to One Steam Generator Event Tree Model	4-46
4.15.1	Event Description	4-46
4.15.2	Event Tree Model and its Nodes	4-47
4.15.3	Event Tree Success Criteria and Core Damage Categories	4-50
4.15.4	Operator Actions	4-50
4.15.5	Transfers and Consequential Events	4-51
4.16	Transients With Core Power Excursion Event Tree Model	4-51
4.16.1	Event Description	4-51
4.16.2	Event Tree Model and its Nodes	4-51
4.16.3	Event Tree Success Criteria and Core Damage Categories	4-55
4.16.4	Operator Actions	4-55
4.16.5	Transfers and Consequential Events	4-55
4.17	Transients With Loss of CCW/SW Event Tree Model	4-56
4.17.1	Event Description	4-56
4.17.2	Event Tree Model and its Nodes	4-56
4.17.3	Event Tree Success Criteria and Core Damage Categories	4-59
4.17.4	Operator Actions	4-59
4.17.5	Transfers and Consequential Events	4-60
4.18	Loss of Main Feedwater Event Tree Model	4-60
4.18.1	Event Description	4-60
4.18.2	Event Tree Model and its Nodes	4-62
4.18.3	Event Tree Success Criteria and Core Damage Categories	4-65
4.18.4	Operator Actions	4-65
4.18.5	Transfers and Consequential Events	4-66
4.19	Loss of Condenser Event Tree Model	4-66
4.19.1	Event Description	4-66
4.19.2	Event Tree Model and its Nodes	4-66
4.19.3	Event Tree Success Criteria and Core Damage Categories	4-70
4.19.4	Operator Actions	4-70
4.19.5	Transfers and Consequential Events	4-70

TABLE OF CONTENTS (cont.)

Section	Title	Page
4.20	Loss of Compressed Air Event Tree Model	4-70
	4.20.1 Event Description	4-70
	4.20.2 Event Tree Model and its Nodes	4-71
	4.20.3 Event Tree Success Criteria and Core Damage Categories	4-74
	4.20.4 Operator Actions	4-74
	4.20.5 Transfers and Consequential Events	4-75
4.21	Loss of Offsite Power Event Tree Model	4-75
	4.21.1 Event Description	4-75
	4.21.2 Event Tree Model and its Nodes	4-75
	4.21.3 Event Tree Success Criteria and Core Damage Categories	4-79
	4.21.4 Operator Actions	4-79
	4.21.5 Transfers and Consequential Events	4-80
4.22	Main Steam Line Break Downstream of MSIVs Event Tree Model	4-80
	4.22.1 Event Description	4-80
	4.22.2 Event Tree Model and its Nodes	4-81
	4.22.3 Event Tree Success Criteria and Core Damage Categories	4-84
	4.22.4 Operator Actions	4-84
	4.22.5 Transfers and Consequential Events	4-85
4.23	Main Steam Line Break Upstream of MSIVs Event Tree Model	4-85
	4.23.1 Event Description	4-85
	4.23.2 Event Tree Model and its Nodes	4-85
	4.23.3 Event Tree Success Criteria and Core Damage Categories	4-89
	4.23.4 Operator Actions	4-89
	4.23.5 Transfers and Consequential Events	4-90
4.24	Stuck-Open Secondary Side Safety Valve Event Tree Model	4-90
	4.24.1 Event Description	4-90
	4.24.2 Event Tree Model and its Nodes	4-91
	4.24.3 Event Tree Success Criteria and Core Damage Categories	4-94
	4.24.4 Operator Actions	4-94
	4.24.5 Transfers and Consequential Events	4-94
4.25	ATWS Precursors Without MFW Event Tree Model	4-95
	4.25.1 Event Description	4-95
	4.25.2 Event Tree Model and its Nodes	4-96
	4.25.3 Event Tree Success Criteria and Core Damage Categories	4-101
	4.25.4 Operator Actions	4-101
	4.25.5 Transfers and Consequential Events	4-101
4.26	ATWS Precursor with SI Event Tree Model	4-101
	4.26.1 Event Description	4-101
	4.26.2 Event Tree Model and its Nodes	4-102
	4.26.3 Event Tree Success Criteria and Core Damage Categories	4-106
	4.26.4 Operator Actions	4-106
	4.26.5 Transfers and Consequential Events	4-106

TABLE OF CONTENTS (cont.)

Section	Title	Page
4.27	ATWS Precursor Transients with MFW Event Tree Model	4-106
4.27.1	Event Description	4-106
4.27.2	Event Tree Model and its Nodes	4-107
4.27.3	Event Tree Success Criteria and Core Damage Categories	4-110
4.27.4	Operator Actions	4-111
4.27.5	Transfers and Consequential Events	4-111
ATTACHMENT 4A	EVENT TREE GUIDELINES	
4A.1	Event Tree Analysis Methodology	4A-1
4A.2	Event Tree Guidelines for Core Damage	4A-3
4A.2.1	Event Trees	4A-3
4A.2.2	Success Criteria	4A-6
4A.2.3	Definition of End States	4A-7
4A.2.4	Plant Response Functions	4A-9
4A.2.5	Event Tree Node Notation	4A-13
4A.2.6	Consequential Events	4A-13
4A.2.7	Transient Template	4A-14
4A.2.8	Small LOCA Template	4A-15
ATTACHMENT 4B	EVENT TREE PICTURES	4B-1
CHAPTER 5	SUPPORT SYSTEMS	
5.1	Introduction	5-1
5.2	Support Systems and Their Interdependencies	5-1
5.3	Front Line Systems and Their Dependencies	5-1
CHAPTER 6	SUCCESS CRITERIA ANALYSIS	
6.1	Introduction	6-1
6.2	Acceptance Criteria and Critical Functions for Success Criteria	6-1
6.3	Event Sequences and Timing, Passive/Active System Interactions	6-3
6.3.1	General Sequence Success Criteria	6-3
6.3.2	Timing of Events and Key Operator Actions	6-9
6.3.3	Passive/Active System Interactions	6-15
6.3.4	Sequence Success Criteria Summary	6-18
6.4	Event Tree Top Events Success Criteria	6-18
6.5	References	6-19
CHAPTER 7	FAULT TREE GUIDELINES	
7.1	Purpose	7-1
7.2	Fault Tree Development	7-1
7.2.1	Procedural Steps for Fault Tree Preparation	7-1
7.2.2	Procedural Steps for Fault Tree Construction	7-2

TABLE OF CONTENTS (cont.)

Section	Title	Page
7.3	Primary Events to be Considered in Fault Trees	7-3
	7.3.1 Random Component Failure	7-3
	7.3.2 Outage for Maintenance and Testing	7-5
	7.3.3 Common Cause Failures	7-6
	7.3.4 Human Errors	7-6
	7.3.5 Power and Control Model	7-9
7.4	Data Base	7-10
7.5	Fault Tree Model: Identification Codes	7-10
	7.5.1 Identification Code for Fault Tree Names	7-10
	7.5.2 Identification Code for Support Systems	7-10
	7.5.3 Identification Code for Primary Event Names	7-11
	7.5.4 Identification Code for Common Cause Failures	7-11
	7.5.5 Identification Code for Undeveloped Events (Modules)	7-12
	7.5.6 Identification Code for Operator Errors	7-13
7.6	Fault Tree Quantification	7-13
7.7	References	7-14
CHAPTER 8	PASSIVE CORE COOLING SYSTEM – PASSIVE RESIDUAL HEAT REMOVAL	
8.1	System Function	8-1
8.2	System Description	8-1
	8.2.1 Support Systems	8-1
	8.2.2 Instrumentation and Control	8-2
	8.2.3 Test and Maintenance	8-2
8.3	System Operation	8-3
8.4	Performance During Accident Conditions	8-3
	8.4.1 Plant Shutdown	8-3
	8.4.2 Loss of Coolant Accidents	8-3
	8.4.3 Passive Residual Heat Removal Heat Exchanger Tube Rupture	8-3
8.5	Initiating Events Review	8-4
	8.5.1 Initiating Events Impacting the PRHR System	8-4
	8.5.2 Initiating Events Caused by PRHR System Malfunction	8-4
8.6	System Logic Models	8-4
	8.6.1 Assumptions and Boundary Conditions	8-5
	8.6.2 Fault Tree Models	8-6
	8.6.3 Human Interactions	8-6
	8.6.4 Common Cause Failures	8-6
8.7	Quantification and Results	8-6

TABLE OF CONTENTS (cont.)

Section	Title	Page
CHAPTER 9	PASSIVE CORE COOLING SYSTEM – CORE MAKEUP TANK	
9.1	System Description	9-1
9.1.1	Support Systems	9-1
9.1.2	Instrumentation and Control	9-1
9.1.3	Test and Maintenance Assumptions	9-2
9.2	System Operation	9-2
9.3	Performance During Accident Conditions	9-3
9.3.1	Inadvertent Opening of a Steam Generator Relief or Safety Valve	9-3
9.3.2	Steam Line Break	9-3
9.3.3	Steam Generator Tube Rupture	9-3
9.3.4	Reactor Coolant System Heatup Transients	9-4
9.3.5	Loss-of-Coolant Accidents	9-4
9.3.6	Loss of Offsite Power	9-4
9.3.7	Anticipated Transient without Trip	9-4
9.4	Initiating Event Review	9-4
9.4.1	Initiating Events Impacting the Core Makeup Tank Subsystem	9-5
9.4.2	Initiating Events Due to Loss of the Core Makeup Tank Subsystem	9-5
9.5	System Logic Models	9-5
9.5.1	Assumptions and Boundary Conditions	9-5
9.5.2	Fault Tree Models	9-7
9.5.3	Human Interactions	9-7
9.5.4	Common Cause Failures	9-8
CHAPTER 10	PASSIVE CORE COOLING SYSTEM – ACCUMULATOR	
10.1	System Description	10-1
10.1.1	Support Systems	10-1
10.1.2	Instrumentation and Control	10-1
10.1.3	Test and Maintenance Assumptions	10-1
10.2	System Operation	10-1
10.3	Performance During Accident Conditions	10-2
10.3.1	Steam Line Break	10-2
10.3.2	Loss-of-Coolant Accidents or Non-Loss-of-Coolant Accidents with Automatic Depressurization System	10-2
10.4	Initiating Event Review	10-3
10.4.1	Initiating Events Impacting the Accumulator Subsystem	10-3
10.4.2	Initiating Events Due to Loss of the Accumulator Subsystem	10-3
10.5	System Logic Models	10-3
10.5.1	Assumptions and Boundary Conditions	10-3
10.5.2	Fault Tree Models	10-4
10.5.3	Human Interactions	10-4
10.5.4	Common Cause Failures	10-4

TABLE OF CONTENTS (cont.)

Section	Title	Page
CHAPTER 11	PASSIVE COOLING SYSTEM – AUTOMATIC DEPRESSURIZATION SYSTEM	
11.1	System Function	11-1
11.2	System Description	11-1
	11.2.1 Support Systems	11-1
	11.2.2 Instrumentation and Control	11-2
	11.2.3 Test and Maintenance	11-2
11.3	System Operation	11-2
11.4	Performance During Accident Conditions	11-3
	11.4.1 Loss of Coolant Accidents	11-3
	11.4.2 Transients	11-3
11.5	Initiating Events Review	11-3
	11.5.1 Initiating Events Impacting the Automatic Depressurization System	11-3
	11.5.2 Initiating Events Caused by the ADS Malfunction	11-4
11.6	System Logic Model	11-4
	11.6.1 Assumptions and Boundary Conditions	11-4
	11.6.2 Fault Tree Models	11-5
	11.6.3 Human Interactions	11-6
	11.6.4 Common Cause Failures	11-7
11.7	Quantification and Results	11-7
CHAPTER 12	PASSIVE CORE COOLING SYSTEM – IN-CONTAINMENT REFUELING WATER STORAGE TANK	
12.1	System Function	12-1
12.2	System Description	12-1
	12.2.1 Support Systems	12-1
	12.2.2 Instrumentation and Control	12-1
	12.2.3 Test and Maintenance	12-2
12.3	System Operation	12-2
12.4	Performance During Accident Conditions	12-2
	12.4.1 Transients	12-3
	12.4.2 Loss of Coolant Accidents	12-4
	12.4.3 In-Vessel Core Damage Mitigation	12-5
	12.4.4 Containment Isolation System Failure	12-5
12.5	Initiating Event	12-5
	12.5.1 Initiating Event Impacting IRWST/Gravity Injection Subsystem	12-5
	12.5.2 Initiating Event due to Loss of IRWST/Gravity Injection Subsystem	12-5
12.6	System Logic Models	12-6
	12.6.1 Assumptions and Boundary Conditions	12-6
	12.6.2 Fault Tree Models	12-8
	12.6.3 Human Interactions	12-8
	12.6.4 Common Cause Failures	12-8
12.7	Quantification and Results	12-9

TABLE OF CONTENTS (cont.)

Section	Title	Page
CHAPTER 13	PASSIVE CONTAINMENT COOLING SYSTEM	
13.1	System Description	13-1
13.1.1	Support Systems	13-1
13.1.2	Instrumentation and Control	13-1
13.1.3	Test and Maintenance Assumptions	13-2
13.2	System Operation	13-2
13.3	Performance During Accident Conditions	13-2
13.3.1	Post-Reactor Trip with Loss of All ac Power	13-2
13.3.2	Automatic Depressurization System Actuation	13-2
13.3.3	Post-Loss-of-Coolant Accident	13-3
13.3.4	Post-Main Steam Line Break	13-3
13.4	Initiating Event Review	13-3
13.4.1	Initiating Events Impacting the Passive Containment Cooling System	13-3
13.4.2	Initiating Events due to Loss of the Passive Containment Cooling System	13-3
13.5	System Logic Model	13-3
13.5.1	Assumptions and Boundary Conditions	13-4
13.5.2	Fault Tree Model	13-5
13.5.3	Human Interactions	13-6
13.5.4	Common Cause Failures	13-6
CHAPTER 14	MAIN AND STARTUP FEEDWATER SYSTEM	
14.1	System Description	14-1
14.1.1	Support Systems	14-1
14.1.2	Instrumentation and Control	14-2
14.1.3	Test and Maintenance	14-2
14.2	System Operation	14-2
14.3	Performance During Accident Conditions	14-2
14.4	Initiating Event Review	14-4
14.4.1	Initiating Event Impacting Main and Startup Feedwater/ Condensate System	14-4
14.4.2	Initiating Event due to Loss of Main and Startup Feedwater/ Condensate System	14-4
14.5	System Logic Models	14-4
14.5.1	Assumptions and Boundary Conditions	14-5
14.5.2	Fault Tree Models	14-7
14.5.3	Human Interactions	14-7
14.5.4	Common Cause Failures	14-7
14.6	Quantification and Results	14-7

TABLE OF CONTENTS (cont.)

Section	Title	Page
CHAPTER 15	CHEMICAL AND VOLUME CONTROL SYSTEM	
15.1	System Description	15-1
15.1.1	Support Systems	15-1
15.1.2	Instrumentation and Control Assumptions	15-1
15.1.3	Test and Maintenance Assumptions	15-2
15.2	System Operation	15-3
15.3	Performance During Accident Conditions	15-3
15.4	Initiating Event Review	15-4
15.4.1	Initiating Events Impacting the Chemical and Volume Control System	15-5
15.4.2	Initiating Events Due to Loss of the Chemical and Volume Control System	15-5
15.5	System Logic Models	15-5
15.5.1	Assumptions and Boundary Conditions	15-5
15.5.2	Fault Tree Models	15-7
15.5.3	Human Interactions	15-7
15.5.4	Common Cause Failures	15-8
CHAPTER 16	CONTAINMENT HYDROGEN CONTROL SYSTEM	
16.1	System Description	16-1
16.1.1	Support Systems	16-1
16.1.2	Instrumentation and Control	16-1
16.1.3	Test and Maintenance	16-1
16.2	System Operation	16-2
16.3	Performance During Accident Conditions	16-2
16.4	Initiating Event Review	16-2
16.5	System Logic Model	16-2
16.5.1	Assumptions and Boundary Conditions	16-2
16.5.2	Fault Tree Model	16-3
16.5.3	Human Interactions	16-3
16.5.4	Common Cause Failures	16-4
CHAPTER 17	NORMAL RESIDUAL HEAT REMOVAL SYSTEM	
17.1	System Description	17-1
17.1.1	Support Systems	17-1
17.1.2	Instrumentation and Control	17-1
17.1.3	Test and Maintenance Assumptions	17-1
17.2	System Operation	17-1
17.3	Performance During Accident Conditions	17-2
17.4	Initiating Event Review	17-3
17.4.1	Initiating Events Impacting the Normal Residual Heat Removal System	17-3
17.4.2	Initiating Events Due to Loss of the Normal Residual Heat Removal System	17-4

TABLE OF CONTENTS (cont.)

Section	Title	Page
17.5	System Logic Models	17-4
	17.5.1 Assumptions and Boundary Conditions	17-4
	17.5.2 Fault Tree Models	17-6
	17.5.3 Human Interactions	17-6
	17.5.4 Common Cause Failures	17-6
17.6	References	17-6
CHAPTER 18	COMPONENT COOLING WATER SYSTEM	
18.1	System Description	18-1
	18.1.1 Support Systems	18-1
	18.1.2 Instrumentation and Control	18-1
	18.1.3 Test and Maintenance Assumptions	18-1
18.2	System Operation	18-2
18.3	Performance During Accident Conditions	18-2
18.4	Initiating Event Review	18-2
	18.4.1 Initiating Events Impacting the Component Cooling Water System	18-2
	18.4.2 Initiating Events Due to Loss of the Component Cooling Water System	18-3
18.5	System Logic Models	18-3
	18.5.1 Assumptions and Boundary Conditions	18-3
	18.5.2 Fault Tree Models	18-4
	18.5.3 Human Interactions	18-4
	18.5.4 Common Cause Failures	18-5
CHAPTER 19	SERVICE WATER SYSTEM	
19.1	System Description	19-1
	19.1.1 Support Systems	19-1
	19.1.2 Instrumentation and Control	19-1
	19.1.3 Test and Maintenance Assumptions	19-1
19.2	System Operation	19-2
19.3	Performance During Accident Conditions	19-2
19.4	Initiating Event Review	19-2
	19.4.1 Initiating Events Impacting the Service Water System	19-2
	19.4.2 Initiating Events Due to Loss of the Service Water System	19-2
19.5	System Logic Models	19-3
	19.5.1 Assumptions and Boundary Conditions	19-3
	19.5.2 Fault Tree Models	19-4
	19.5.3 Human Interactions	19-5
	19.5.4 Common Cause Failures	19-5

TABLE OF CONTENTS (cont.)

Section	Title	Page
CHAPTER 20	CENTRAL CHILLED WATER SYSTEM	
20.1	System Description	20-1
20.1.1	Support Systems	20-1
20.1.2	Instrumentation and Control	20-1
20.1.3	Test and Maintenance Assumptions	20-1
20.2	System Operation	20-2
20.3	Performance During Accident Conditions	20-2
20.4	Initiating Event Review	20-2
20.4.1	Initiating Events Impacting the Central Chilled Water System	20-2
20.4.2	Initiating Events Due to Loss of the Central Chilled Water System	20-3
20.5	System Logic Model	20-3
20.5.1	Assumptions and Boundary Conditions	20-3
20.5.2	Fault Tree Model	20-4
20.5.3	Human Interactions	20-4
20.5.4	Common Cause Failures	20-4
CHAPTER 21	AC POWER SYSTEM	
21.1	System Description	21-1
21.1.1	Support Systems	21-1
21.1.2	Instrumentation and Control	21-2
21.1.3	Test and Maintenance Assumptions	21-2
21.2	System Operation	21-2
21.3	Performance During Accident Conditions	21-3
21.3.1	Automatic Load Shedding	21-3
21.3.2	Manual Transfer	21-3
21.3.3	Electric Circuit Protection	21-3
21.4	Initiating Event Review	21-3
21.4.1	Loss of the Main Generator	21-4
21.4.2	Loss of Offsite Power	21-4
21.4.3	Loss of 6900-vac and 480-vac Busses	21-4
21.5	System Logic Models	21-4
21.5.1	Assumptions and Boundary Conditions	21-5
21.5.2	Fault Tree Models	21-7
21.5.3	Human Interactions	21-8
21.5.4	Common Cause Failures	21-8
CHAPTER 22	CLASS 1E DC AND UNINTERRUPTIBLE POWER SUPPLY SYSTEM	
22.1	System Description	22-1
22.1.1	Support Systems	22-1
22.1.2	Instrumentation and Control	22-1
22.1.3	Test and Maintenance Assumptions	22-1
22.2	System Operation	22-2
22.3	Performance During Accident Conditions	22-2

TABLE OF CONTENTS (cont.)

Section	Title	Page
22.4	Initiating Event Review	22-2
	22.4.1 Initiating Events Impacting the Class 1E dc and UPS System	22-3
	22.4.2 Initiating Events Due to Loss of the Class 1E dc and UPS System	22-3
22.5	System Logic Models	22-3
	22.5.1 Assumptions and Boundary Conditions	22-3
	22.5.2 Fault Tree Models	22-4
	22.5.3 Human Interactions	22-4
	22.5.4 Common Cause Failures	22-4
22.6	References	22-5
CHAPTER 23	NON-CLASS 1E DC AND UPS SYSTEM	
23.1	System Description	23-1
	23.1.1 Support Systems	23-1
	23.1.2 Instrumentation and Control	23-1
	23.1.3 Test and Maintenance Assumptions	23-1
23.2	System Operation	23-2
23.3	Performance During Accident Conditions	23-2
23.4	Initiating Event Review	23-2
	23.4.1 Initiating Events Impacting the Non-Class 1E dc and UPS System	23-2
	23.4.2 Initiating Events Due to Loss of the Non-Class 1E dc and UPS Power System	23-3
23.5	System Logic Models	23-3
	23.5.1 Assumptions and Boundary Conditions	23-3
	23.5.2 Fault Tree Models	23-4
	23.5.3 Human Interactions	23-5
	23.5.4 Common Cause Failures	23-5
23.6	References	23-5
CHAPTER 24	CONTAINMENT ISOLATION	
24.1	System Description	24-1
	24.1.1 Support Systems	24-1
	24.1.2 Instrumentation and Control	24-1
	24.1.3 Test and Maintenance Assumptions	24-2
24.2	System Operation	24-2
24.3	Performance During Accident Conditions	24-2
24.4	Initiating Event Review	24-2
	24.4.1 Initiating Events Impacting Containment Isolation	24-2
	24.4.2 Initiating Events Due to Loss of the Containment Isolation System	24-2
24.5	System Logic Models	24-3
	24.5.1 Assumptions and Boundary Conditions	24-4
	24.5.2 Fault Tree Models	24-5
	24.5.3 Human Interactions	24-6
	24.5.4 Common Cause Failures	24-6
24.6	References	24-6

TABLE OF CONTENTS (cont.)

Section	Title	Page
CHAPTER 25	COMPRESSED AND INSTRUMENT AIR SYSTEM	
25.1	System Description	25-1
25.1.1	Support Systems	25-2
25.1.2	Instrumentation and Control	25-2
25.1.3	Test and Maintenance Assumptions	25-3
25.2	System Operation	25-3
25.3	Performance During Accident Conditions	25-3
25.4	Initiating Event Review	25-4
25.4.1	Initiating Events Impacting the Instrument Air Subsystem	25-4
25.4.2	Initiating Events Due to Loss of the Instrument Air Subsystem	25-4
25.5	System Logic Models	25-4
25.5.1	Assumptions and Boundary Conditions	25-4
25.5.2	Fault Tree Models	25-6
25.5.3	Human Interactions	25-7
25.5.4	Common Cause Failures	25-7
CHAPTER 26	PROTECTION AND SAFETY MONITORING SYSTEM	
26.1	System Analysis Description	26-1
26.1.1	Analysis of Support Systems	26-4
26.1.2	Analysis of Instrumentation	26-5
26.1.3	Test and Maintenance Assumptions	26-6
26.2	Performance During Accident Conditions	26-7
26.3	Initiating Event Review	26-7
26.3.1	Initiating Event Impacting PMS	26-7
26.3.2	Initiating Event due to Loss of PMS	26-8
26.4	System Logic Model Development	26-8
26.4.1	Assumptions and Boundary Conditions	26-8
26.4.2	Fault Tree Models	26-12
26.4.3	Description of I&C Subtree Development	26-12
26.4.4	Human Interactions	26-19
26.5	Discussion of Methodology	26-19
26.5.1	Fault Tree Analysis	26-20
26.5.2	Unavailability	26-20
26.5.3	Spurious Failure Rate Per Year	26-20
26.5.4	Common Cause Failures	26-22
26.5.5	Data Manipulation	26-23
26.6	References	26-24
CHAPTER 27	DIVERSE ACTUATION SYSTEM	
27.1	System Analysis Description	27-1
27.1.1	Support Systems Analysis	27-2
27.1.2	Analysis of Instrumentation and Control	27-2
27.1.3	Test and Maintenance	27-2

TABLE OF CONTENTS (cont.)

Section	Title	Page
27.2	Analysis of System Operation	27-2
27.3	Performance During Accident Conditions	27-6
27.4	Initiating Event Review	27-6
27.4.1	Initiating Events Impacting the Diverse Actuation System	27-6
27.4.2	Initiating Events Due to Loss of the Diverse Actuation System	27-6
27.5	System Logic Model	27-6
27.5.1	Assumptions and Boundary Conditions	27-7
27.5.2	Fault Tree Model	27-7
27.5.3	Human Interactions	27-7
27.5.4	Common Cause Failures	27-8
CHAPTER 28	PLANT CONTROL SYSTEM	
28.1	System Analysis Description	28-1
28.1.1	Analysis of Support Systems	28-3
28.1.2	Analysis of Instrumentation	28-4
28.1.3	Test and Maintenance Assumptions	28-4
28.2	Performance During Accident Conditions	28-6
28.3	Initiating Event Review	28-6
28.3.1	Initiating Events Impacting the Plant Control System	28-6
28.3.2	Initiating Event due to Loss of the Plant Control System	28-6
28.4	System Logic Model Development	28-7
28.4.1	Assumptions and Boundary Conditions	28-7
28.4.2	Fault Tree Models	28-9
28.4.3	Description of I&C Subtree Development	28-10
28.4.4	Human Interactions	28-16
28.5	Discussion of Methodology	28-17
28.5.1	Fault Tree Analysis	28-17
28.5.2	Unavailability	28-17
28.5.3	Common Cause Failures	28-17
28.5.4	Data Manipulation	28-18
CHAPTER 29	COMMON-CAUSE ANALYSIS	
29.1	Introduction	29-1
29.2	Dependent Failures	29-1
29.3	Common-Cause Analysis	29-4
29.3.1	Assumptions	29-4
29.3.2	Analysis of Potential Common-Cause Failures within the Systems	29-6
29.3.3	Analysis of Potential Common-Cause Failures among Several Systems	29-6
29.4	Calculations For Component Groups	29-6
29.4.1	DC Batteries	29-7
29.4.2	Reactor Trip Breakers	29-8
29.4.3	Automatic Depressurization System Explosive Valves	29-9

TABLE OF CONTENTS (cont.)

Section	Title	Page
29.4.4	Air-Operated Valves in Core Makeup Tanks	29-10
29.4.5	Automatic Depressurization System Motor-Operated Valves	29-11
29.4.6	Common-Cause Failure for IRWST Valves	29-14
29.5	Results	29-17
29.6	References	29-17
ATTACHMENT 29A	COMMON-CAUSE ANALYSIS GUIDELINES	29A-1
29A.1	Introduction	29A-1
29A.2	Types of Dependencies	29A-1
29A.3	Common Cause Failures Definition	29A-2
29A.4	Methodology	29A-3
29A.5	Common Cause Failures Calculation Procedure	29A-4
29A.5.1	Procedure for Treatment of Common Cause Failures Within a System	29A-5
29A.5.2	Procedure for Treatment of Common Cause Failures Among More Systems	29A-7
29A.6	Common Cause Failure Numerical Evaluation	29A-8
29A.6.1	Evaluation through Beta Factor Method	29A-8
29A.6.2	Evaluation through Multiple-Greek Letter (MGL) Method	29A-8
29A.7	References	29A-10
CHAPTER 30	HUMAN RELIABILITY ANALYSIS	
30.1	Introduction	30-1
30.2	Summary of Results	30-1
30.3	Methodology	30-2
30.4	Major Assumptions	30-4
30.5	Types of Human Interactions	30-10
30.5.1	Quantification Model	30-11
30.6	Quantification	30-12
30.6.1	ZON-MAN01 (Start the Onsite Standby Diesel Generator)	30-12
30.6.2	LPM-MAN01 (Recognize the Need for Reactor Coolant System Depressurization)	30-13
30.6.3	LPM-MAN02 (Recognize the Need for Reactor Coolant System Depressurization)	30-15
30.6.4	LPM-MAN05 (Recognize the Need for Reactor Coolant System Depressurization)	30-16
30.6.5	LPM-REC01 (Recognize the Need for Reactor Coolant System Depressurization)	30-17
30.6.6	ADN-MAN01 (Actuate the Automatic Depressurization System)	30-17
30.6.7	ADN-REC01 (Actuate the Automatic Depressurization System)	30-19
30.6.8	CCB-MAN01 (Start the Standby Component Cooling Water Pump)	30-19
30.6.9	CCN-MAN02 (Inadvertent Misalignment of Heat Exchanger)	30-20
30.6.10	CIB-MAN00 (Diagnose Steam Generator Tube Rupture)	30-21
30.6.11	DUMP-MAN01 (Operate Steam Dump Valves)	30-22

TABLE OF CONTENTS (cont.)

Section	Title	Page
30.6.12	CIC-MAN01 (Isolate Containment)	30-23
30.6.13	ADS-MANTEST (Recognize the Need and Reclose ADS Stage MOV)	30-24
30.6.14	CAN-MAN0S (Locally Close Manual Valve CAS-V204 to Isolate Containment)	30-25
30.6.15	CIT-MAN0S (Isolate Containment)	30-26
30.6.16	CMN-MAN01 (Actuate Core Makeup Tank)	30-27
30.6.17	CMN-REC01 (Actuate the Core Makeup Tanks)	30-28
30.6.18	CVN-MAN00 (Align Chemical and Volume Control System)	30-29
30.6.19	CVN-MAN02 (Align Chemical and Volume Control System)	30-30
30.6.20	CVN-MAN03 (Start Chemical and Volume Control System Pump B)	30-30
30.6.21	ADF-MAN01 (Depressurize the RCS to Refill the Pressurizer)	30-31
30.6.22	SGHL-MAN01 (Isolate Feedwater to Failed Steam Generator)	30-32
30.6.23	CAN-MAN01 (Start Standby Compressor)	30-33
30.6.24	REN-MAN02 (Initiate Recirculation)	30-33
30.6.25	REN-MAN03 (Initiate Recirculation)	30-34
30.6.26	IWN-MAN00 (Operate In-Containment Refueling Water Storage Tank Motor-Operated Valves)	30-35
30.6.27	RHN-MAN01 (Align Normal Residual Heat Removal System)	30-36
30.6.28	RHN-MANDIV (Align Normal Residual Heat Removal System)	30-37
30.6.29	RHN-MAN02/RHN-MAN03 (Align Normal Residual Heat Removal System)	30-38
30.6.30	PCN-MAN01 (Actuate Passive Containment Cooling System)	30-40
30.6.31	HPM-MAN01 (Diagnose Need for High Pressure Heat Removal)	30-40
30.6.32	PRN-MAN01 (Align Passive Residual Heat Removal System)	30-41
30.6.33	PRN-MAN02 (Align Passive Residual Heat Removal System)	30-42
30.6.34	PRN-MAN03 (Align Passive Residual Heat Removal System)	30-43
30.6.35	PRI-MAN01 (Isolate Failed Passive Residual Heat Removal Heat Exchanger)	30-44
30.6.36	REN-MAN04 (Initiate Recirculation)	30-45
30.6.37	RCN-MAN01 (Trip Reactor Coolant Pumps)	30-46
30.6.38	ATW-MAN01 (Manually Insert Control Rods)	30-47
30.6.39	ATW-MAN03 (Manually Trip the Reactor through Protection and Safety Monitoring System in One Minute)	30-48
30.6.40	ATW-MAN04 (Manually Trip the Reactor through Diverse Actuation System in One Minute)	30-49
30.6.41	ATW-MAN05 (Manually Trip the Reactor through Protection and Safety Monitoring System in Seven Minutes)	30-49
30.6.42	ATW-MAN06 (Manually Trip the Reactor through Diverse Actuation System In Seven Minutes)	30-50
30.6.43	RTN-MAN01 (Perform Controlled Reactor Shutdown)	30-51
30.6.44	FWN-MAN02 (Start the Startup Feedwater Pumps)	30-52
30.6.45	FWN-MAN03 (Start the Startup Feedwater Pumps)	30-53
30.6.46	REG-MAN00 (Regulate Startup Feedwater)	30-54

TABLE OF CONTENTS (cont.)

Section	Title	Page
30.6.47	CIA-MAN01 (Isolate Failed Steam Generator)	30-55
30.6.48	CIB-MAN01 (Close Main Steam Isolation Valve)	30-56
30.6.49	SGA-MAN01 (Inadvertent Opening of Steam Generator Power-Operated Relief Valve)	30-57
30.6.50	SWN-MAN01N (Open Air-Operated Valve on Motor Strainer Line)	30-58
30.6.51	SWB-MAN02 (Start Standby Service Water Pump)	30-58
30.6.52	SWB-MAN02N (Start Standby Service Water Pump)	30-59
30.6.53	TCB-MAN01 (Start Standby Turbine Closed Cooling Water Pump)	30-60
30.6.54	TCB-MAN02 (Locally Align Standby Turbine Closed Cooling Water Heat Exchanger)	30-61
30.6.55	VLN-MAN01 (Actuate Hydrogen Control System)	30-62
30.6.56	VWN-MAN01 (Align Standby Chiller)	30-63
30.6.57	ATW-MAN11 (Recognize the Need for Manual Boration)	30-64
30.6.58	REC-MANDAS (Diagnosis of an Event Through DAS Signals or Perform an Activity by Operating DAS Controls)	30-65
30.6.59	RHN-MAN04 (Isolate the RNS During Shutdown Conditions)	30-65
30.6.60	RHN-MAN05 (Initiate Gravity Injection from IRWST via RNS Suction Line)	30-66
30.6.61	RHN-MAN06 (Recognize the Need and Throttle RNS Valve V011)	30-68
30.6.62	RCS-MANODS1 (Close AOVs CVS-V045 or -V047, Given Failure of HL Level Instruments)	30-68
30.6.63	RCS-MANODS2 (Close AOVs CVS-V045 or -V047, Given Failure of Valves to Close Automatically)	30-70
30.6.64	SWN-MAN03 (Recognize the Need and Locally Refill Service Water Basin)	30-70
30.7	Conditional Probability Evaluation	30-71
30.7.1	Application	30-72
30.7.2	Process Used to Determine Dependencies	30-72
30.7.3	Calculation of Dependent Human Error Probabilities	30-72
30.8	References	30-74
ATTACHMENT 30A	HUMAN RELIABILITY ANALYSIS GUIDELINES	30A-1
30A.1	Introduction	30A-1
30A.2	Schedule for Human Reliability Analysis	30A-1
30A.3	Methodology	30A-1
30A.4	Responsibility	30A-2
30A.5	Procedure for Human Interaction Evaluation	30A-2
30A.5.1	Type A	30A-3
30A.5.2	Type B	30A-3
30A.5.3	Type C	30A-4
30A.5.4	Commission Errors That Have Detrimental Effects	30A-6

TABLE OF CONTENTS (cont.)

Section	Title	Page
30A.6	Procedure for Human Error Probabilities Quantification	30A-8
	30A.6.1 Basic Assumptions for Human Interaction Analysis	30A-8
30A.7	References	30A-9
CHAPTER 31	OTHER EVENT TREE NODE PROBABILITIES	
31.1	Introduction	31-1
31.2	Identification of Cases Requiring Calculations	31-1
	31.2.1 BL – Main Steam Line Break Occurs Inside Containment	31-1
	31.2.2 CNB – Containment Isolation Fails Due to Reactor Coolant System Vessel Rupture	31-1
	31.2.3 MGSET – Control Rods Motor-Generator Set Trip	31-1
	31.2.4 NSGTR – Consequential Steam Generator Tube Rupture	31-2
	31.2.5 PO – Pre-existing Containment Opening Allowing Bypass	31-2
	31.2.6 PRES – Reactor Coolant System Pressure Relief via Pressurizer Safety Valves	31-2
	31.2.7 PRSOV – Pressurizer Safety Valves Reclose	31-2
	31.2.8 R05 – Offsite Power Recovered within One-Half Hour	31-2
	31.2.9 SLSOV – Main Steam Line Relief Valves Reclose	31-2
31.3	Case-Specific Calculations	31-3
	31.3.1 BL – Main Steam Line Break Occurs Inside Containment	31-3
	31.3.2 CNB – Containment Isolation Fails Due to RCS Vessel Rupture	31-3
	31.3.3 MGSET – Control Rods Motor-Generator Set Trip	31-3
	31.3.4 PO – Pre-existing Containment Opening Allowing Bypass	31-4
	31.3.5 PRES – Reactor Coolant System Pressure Relief via Pressurizer Safety Valves	31-4
	31.3.6 PRSOV – Pressurizer Safety Valves Reclose	31-5
	31.3.7 R05 – Offsite Power Recovered within One-Half Hour	31-6
	31.3.8 SGTR1 – Single Consequential Steam Generator Tube Rupture	31-6
	31.3.9 SGTR – Multiple Consequential Steam Generator Tube Rupture	31-8
	31.3.10 SLSOV – Main Steam Line Relief and Safety Valves Reclose	31-8
	31.3.11 SLSOV1 – Main Steam Line Relief and Safety Valves Reclose	31-9
	31.3.12 SLSOV2 – Main Steam Line Safety Valves Reclose	31-10
	31.3.13 SLSOV3 – Main Steamline Relief and Safety Valves Reclose, SGTR	31-10
31.4	References	31-11
CHAPTER 32	DATA ANALYSIS AND MASTER DATA BANK	
32.1	Data Analysis	32-1
	32.1.1 Random Component Failure Data	32-1
	32.1.2 Test and Maintenance Unavailability	32-2
	32.1.3 Common Cause Failure Data	32-2
	32.1.4 Human Reliability Data	32-2
	32.1.5 Initiating Event Frequency Data	32-2

TABLE OF CONTENTS (cont.)

Section	Title	Page
32.2	Master Data Bank	32-2
32.2.1	Initiating Event Frequencies	32-3
32.2.2	Random Component Failures	32-3
32.2.3	Common Cause Failure Probabilities	32-3
32.2.4	Human Error Probabilities	32-3
32.2.5	System-Specific Calculations	32-3
32.2.6	Other Event Tree Node Probabilities	32-3
32.2.7	Master Data Bank	32-4
32.3	References	32-4
CHAPTER 33	FAULT TREE AND CORE DAMAGE QUANTIFICATION	
33.1	Introduction	33-1
33.2	Fault Tree Model Quantification	33-1
33.3	Event Tree Model Calculation	33-1
33.3.1	Core Damage Quantification Method	33-2
33.3.2	Core Damage Quantification Input Files and Data	33-4
33.3.3	Definition of Consequential Event Categories	33-4
33.3.4	Incorporate Operator Action Dependencies Into Plant Core Damage Frequency Quantification	33-6
33.3.5	Core Damage Frequency Results	33-6
CHAPTER 34	SEVERE ACCIDENT PHENOMENA TREATMENT	
34.1	Introduction	34-1
34.2	Treatment of Physical Processes	34-1
34.2.1	In-Vessel Retention of Molten Core Debris	34-1
34.2.2	Fuel-Coolant Interaction (Steam Explosions)	34-2
34.2.3	Hydrogen Combustion and Detonation	34-4
34.2.4	High-Pressure Melt Ejection	34-5
34.2.5	Core Debris Coolability	34-5
34.2.6	Containment Pressurization from Decay Heat	34-6
34.2.7	Elevated Temperature (Equipment Survivability)	34-7
34.2.8	Summary	34-7
34.3	Analysis Method	34-7
34.4	Severe Accident Analyses	34-8
34.4.1	Accident Class 3BE – Intact Containment	34-8
34.4.2	Accident Class 3BE – Failed Containment	34-10
34.4.3	Accident Class 3BL – Intact Containment	34-11
34.4.4	Accident Class 3BR – Intact Containment	34-12
34.4.5	Accident Class 3C – Intact Containment	34-13
34.4.6	Accident Class 3C – Failed Containment	34-14
34.4.7	Accident Class 3D – Intact Containment	34-14
34.4.8	Accident Class 3D – Failed Containment	34-16
34.4.9	Accident Class 6E – Bypass Containment	34-16

TABLE OF CONTENTS (cont.)

Section	Title	Page
	34.4.10 Accident Class 6L – Bypass Containment	34-17
	34.4.11 Accident Class 1AP	34-17
	34.4.12 Accident Class 1A	34-18
34.5	Insights and Conclusions	34-19
34.6	References	34-20
CHAPTER 35	CONTAINMENT EVENT TREE ANALYSIS	
35.1	Introduction	35-1
35.2	Containment Event Tree – General Discussion	35-1
35.3	Event Tree Construction	35-2
35.4	Level 1/Level 2 Interface	35-3
35.5	Containment Event Tree Top Events	35-3
	35.5.1 Severe Accident Phenomena Considerations	35-3
	35.5.2 Operator Action and Systems Top-Event Considerations	35-5
35.6	Release Category Definitions	35-7
	35.6.1 Release Category BP – Containment Bypass	35-8
	35.6.2 Release Category CI – Containment Isolation Failure	35-9
	35.6.3 Release Category CFE – Early Containment Failure	35-9
	35.6.4 Release Category CFI – Intermediate Containment Failure	35-9
	35.6.5 Release Category CFL – Late Containment Failure	35-9
	35.6.6 Release Category CFV – Containment Venting	35-10
	35.6.7 Release Category IC – Intact Containment	35-10
35.7	Top-Event Nodal Questions and Success Criteria	35-10
	35.7.1 Top Event DP – RCS Depressurization After Core Uncovery	35-11
	35.7.2 Top Event IS – Containment Isolation	35-12
	35.7.3 Top Event IR – Reactor Cavity Flooding	35-13
	35.7.4 Top Event RFL – Reflooding of a Degraded Core	35-14
	35.7.5 Top Event VF – Debris Relocation to the Reactor Cavity	35-14
	35.7.6 Top Event PC – Passive Containment Cooling	35-15
	35.7.7 Top Event VNT – Containment Venting	35-16
	35.7.8 Top Event IF – Intermediate Containment Failure	35-16
	35.7.9 Top Event IG – Hydrogen Control System	35-17
	35.7.10 Top Event DF – Diffusion Flame	35-17
	35.7.11 Top Event DTE – Early Hydrogen Detonation	35-18
	35.7.12 Top Event DFG – Hydrogen Deflagration	35-19
	35.7.13 Top Event DTI – Intermediate Hydrogen Detonation	35-19
35.8	Summary	35-20
35.9	References	35-20
CHAPTER 36	REACTOR COOLANT SYSTEM DEPRESSURIZATION	
36.1	Introduction	36-1
36.2	Definition of High Pressure	36-1
36.3	Node DP	36-2

TABLE OF CONTENTS (cont.)

Section	Title	Page
36.4	Success Criteria	36-2
36.4.1	Accident Classes 3BE, 3BL, 3BR, 3C	36-2
36.4.2	Accident Class 3D/1D	36-3
36.4.3	Accident Classes 1A and 1AP	36-3
36.4.4	Steam Generator Tube Rupture – Accident Class 6	36-4
36.4.5	Anticipated Transient Without Scram – Accident Class 3A	36-5
36.6	References	36-5
CHAPTER 37	CONTAINMENT ISOLATION	
37.1	Introduction	37-1
37.2	Definition of Containment Isolation	37-1
37.3	Success Criteria	37-1
37.3.1	Accident Classes 1A and 1AP	37-2
37.3.2	Accident Class 3A	37-2
37.3.3	Accident Class 3BR	37-2
37.3.4	Accident Class 3BE	37-2
37.3.5	Accident Class 3BL	37-2
37.3.6	Accident Class 3C	37-2
37.3.7	Accident Class 3D/1D	37-3
37.3.8	Accident Class 6	37-3
37.4	Summary	37-3
CHAPTER 38	REACTOR VESSEL REFLOODING	
38.1	Introduction	38-1
38.2	Definition of Reflooding Success	38-1
38.3	Success Criteria	38-1
38.3.1	Accident Classes 1A and 1AP	38-1
38.3.2	Accident Class 3BR	38-2
38.3.3	Accident Class 3BE	38-2
38.3.4	Accident Class 3BL	38-3
38.3.5	Accident Class 3D/1D	38-3
38.3.6	Accident Class 6	38-3
38.3.7	Accident Class 3C	38-3
38.3.8	Accident Class 3A	38-4
38.4	Summary	38-4
CHAPTER 39	IN-VESSEL RETENTION OF MOLTEN CORE DEBRIS	
39.1	Introduction	39-1
39.2	Background on the Application of IVR to the Passive Plant	39-1
39.3	Application of IVR to the AP1000 Passive Plant	39-2
39.4	Reactor Vessel Failure Criteria	39-3
39.5	In-Vessel Melt Progression and Relocation	39-4

TABLE OF CONTENTS (cont.)

Section	Title	Page
39.6	Application of Heat Transfer Correlations to the AP1000	39-6
	39.6.1 Debris Pool to Vessel Wall Heat Transfer	39-6
	39.6.2 Vessel Wall to External Cooling Water Heat Transfer	39-7
39.7	Quantification of Margin to Failure of the Reactor Vessel Wall	39-8
	39.7.1 Zirconium Oxidation Fraction Input Probability Distribution	39-9
	39.7.2 Steel Mass Input Probability Distribution	39-9
	39.7.3 Final Bounding State Timing Input Probability Distribution	39-10
	39.7.4 Critical Heat Flux	39-10
	39.7.5 Results and Conclusions of Heat Flux Quantification	39-10
39.8	Reactor Coolant System Depressurization	39-11
39.9	Reactor Cavity Flooding (Node IR)	39-11
	39.9.1 Node IR Success Criteria	39-12
	39.9.2 Cavity Flooding Scenario Dependencies	39-13
39.10	Reactor Vessel Insulation Design Concept	39-15
	39.10.1 Description of Reactor Vessel Insulation and Venting	39-15
	39.10.2 Design Analysis of the Insulation and Support Frame	39-17
39.11	Reactor Vessel External Surface Treatment	39-18
39.12	Reactor Vessel Failure (Node VF)	39-18
	39.12.1 Node VF Success Criteria	39-18
39.13	Summary	39-19
39.14	References	39-19
ATTACHMENT 39A	AP1000 IN-VESSEL CORE MELTING RELOCATION	39A-1
39A.1	Introduction	39A-1
39A.2	Phenomenological Issues	39A-1
	39A.2.1 Focusing Effect	39A-1
	39A.2.2 Material Interaction	39A-1
39A.3	AP1000 Reactor Vessel Lower Internals Geometry	39A-1
39A.4	Modeling of Core and Reactor Vessel Lower Internals Heatup	39A-2
	39A.4.1 MAAP4 Model	39A-2
	39A.4.2 Finite Difference Modeling	39A-3
	39A.4.3 Relocation of In-Core Debris to Lower Plenum	39A-3
39A-5	Base Core Damage Sequence for In-Vessel Retention	39A-3
	39A.5.1 Core Heatup and Formation of In-Core Molten Debris Layers	39A-4
	39A.5.2 Melting of Core Shroud and Core Barrel	39A-6
	39A.5.3 Initial Relocation of Molten Core Debris to Lower Plenum	39A-7
	39A.5.4 Lower Plenum Debris Pool Formation	39A-8
39A.6	Potential for Debris Interaction	39A-12
39A.7	Conclusions from Analysis of AP1000 In-Vessel Core Melting and Relocation	39A-12
39A.8	References	39A-13

TABLE OF CONTENTS (cont.)

Section	Title	Page
CHAPTER 40	PASSIVE CONTAINMENT COOLING, LONG TERM CONTAINMENT INTEGRITY AND CONTAINMENT VENTING	
40.1	Passive Containment Cooling System	40-1
40.2	Passive Containment Cooling Water – Node PC	40-2
40.2.1	Node PC Success Criteria	40-2
40.2.2	Operator Action	40-2
40.2.3	Node PC Failure Probability	40-3
40.3	Containment Venting – Node VT	40-3
40.3.1	Venting Success Criteria	40-3
40.3.2	Venting Failure Probability	40-4
40.4	Intermediate Containment Failure – Node IF	40-4
40.4.1	Success Criterion	40-5
40.4.2	Intermediate Containment Failure Probability	40-5
40.5	References	40-5
CHAPTER 41	HYDROGEN MIXING AND COMBUSTION ANALYSIS	
41.1	Discussion of the Issue	41-1
41.2	Controlling Phenomena	41-2
41.3	Major Assumptions and Phenomenological Uncertainties	41-3
41.3.1	Hydrogen Generation	41-3
41.3.2	Containment Pressure	41-3
41.3.3	Flammability Limits	41-3
41.3.4	Detonation Limits and Loads	41-4
41.3.5	Igniter System	41-4
41.3.6	Other Ignition Sources	41-5
41.3.7	Severe Accident Management Actions	41-5
41.4	Hydrogen Generation and Mixing	41-5
41.4.1	Accident Class 3BE – Failure of Gravity Injection	41-6
41.4.2	Accident Class 3BL – Failure of Gravity Recirculation	41-9
41.4.3	Accident Class 3BR – Large LOCA with Accumulator Failure	41-10
41.4.4	Accident Class 3C	41-11
41.4.5	Accident Classes 3D and 1D	41-12
41.4.6	Accident Class 1AP	41-12
41.4.7	Accident Class 1A	41-13
41.4.8	Accident Class 3A	41-13
41.4.9	Accident Class 6	41-13
41.4.10	Overall Mixing Insights	41-14
41.5	Hydrogen Burning at Igniters	41-15
41.6	Early Hydrogen Combustion	41-15
41.6.1	Hydrogen Generation Rates	41-15
41.6.2	Hydrogen Release Locations	41-17
41.6.3	Early Hydrogen Combustion Ignition Sources	41-18

TABLE OF CONTENTS (cont.)

Section	Title	Page
41.7	Diffusion Flame Analysis – CET Node DF	41-18
41.7.1	AP1000 Diffusion Flame Mitigation Strategy	41-19
41.7.2	Node DF Containment Failure Probability Assignment	41-20
41.8	Early Hydrogen Detonation – Containment Event Tree Node DTE	41-21
41.8.1	Containment Success Criteria at Node DTE	41-21
41.8.2	Early Hydrogen Detonation Decomposition Event Tree	41-22
41.9	Deflagration in Time Frame 3	41-23
41.9.1	Containment Success Criterion at Node DFL	41-23
41.9.2	AICC Peak Pressure	41-24
41.9.3	Conditional Containment Failure Probability from Deflagration	41-25
41.10	Detonation in Intermediate Time Frame	41-29
41.10.1	Containment Success Criterion at Node DTI	41-29
41.10.2	Mixing and Stratification	41-29
41.10.3	Quantification of DTI Failure Probabilities	41-30
41.11	Safety Margin Basis Containment Performance Requirement	41-30
41.12	Summary	41-31
41.13	References	41-31
ATTACHMENT 41A	AP1000 SPECIFIC MAAP4.04 ANALYSES	41A-1
ATTACHMENT 41B	ANALYSIS OF HYDROGEN BURNING AT IGNITERS	41B-1
CHAPTER 42	CONDITIONAL CONTAINMENT FAILURE PROBABILITY DISTRIBUTION	
42.1	Introduction	42-1
42.2	Probabilistic Model	42-1
42.3	Containment Failure Characteristics	42-2
42.3.1	Median Values for Containment Failure	42-2
42.3.2	Uncertainties in Containment Failure	42-3
42.4	Containment Failure Predictions	42-4
42.4.1	Containment Cylindrical Shell	42-4
42.4.2	Ellipsoidal Upper Head	42-5
42.4.3	Equipment Hatches	42-5
42.4.4	Personnel Airlock	42-6
42.5	Overall Failure Distribution	42-6
42.6	Summary and Conclusions	42-7
42.7	References	42-7
CHAPTER 43	RELEASE FREQUENCY QUANTIFICATION	
43.1	Introduction	43-1
43.2	Plant Damage State Frequency Calculations	43-2
43.3	Containment Event Tree Node Frequencies	43-2
43.3.1	CET Nodes	43-2
43.3.2	CET Node Probabilities From Boolean Expressions	43-3

TABLE OF CONTENTS (cont.)

Section	Title	Page
	43.3.3 Probabilities for Hydrogen-Related CET Nodes	43-6
	43.3.4 Other CET Node Probabilities	43-6
43.4	Containment Event Tree Quantification	43-7
	43.4.1 Containment Event Tree	43-7
	43.4.2 Dominant CET Sequences	43-7
	43.4.3 LRF Cutsets for Dominant Sequences	43-7
43.5	Summary of Results	43-7
43.6	Importance and Sensitivity Analyses	43-8
	43.6.1 CET Event Node Importance Analysis	43-8
	43.6.2 No Credit Taken for DP Node for PDS-6	43-8
	43.6.3 Lesser Reliability for Containment Isolation	43-8
	43.6.4 Lesser Reliability for Hydrogen Igniters	43-8
	43.6.5 Lesser Reliability for PCS	43-9
	43.6.6 No Credit for Depressurization for High Pressure PDS	43-9
	43.6.7 Set PDS-3C Vessel Failure Probability to 1.0	43-9
	44.6.8 Set 3D and 1AP Diffusion Flame and Detonation Failure Probability to 1.0	43-9
43.7	Conclusions and Insights	43-9
ATTACHMENT 43A	PDS CALCULATIONS	43A-1
ATTACHMENT 43B	DP NODE PROBABILITY FOR PDS	43B-1
ATTACHMENT 43C	EVALUATION OF OPERATOR ACTIONS	43C-1
CHAPTER 44	MAAP4 CODE DESCRIPTION AND AP1000 MODELING	
44.0	MAAP Background	44-1
44.1	MAAP4	44-1
44.2	The AP1000 MAAP4 Modeling	44-3
44.3	Benchmarking	44-5
44.4	Summary and Conclusions	44-6
44.5	References	44-7
CHAPTER 45	FISSION-PRODUCT SOURCE TERMS	
45.1	Summary of AP1000 Release Categories	45-1
45.2	Release Category Source Terms	45-2
	45.2.1 Release Category IC	45-2
	45.2.2 Release Category BP	45-2
	45.2.3 Release Category CI	45-2
	45.2.4 Release Category CFE	45-2
	45.2.5 Release Category CFI	45-3
	45.2.6 Release Category CFL	45-3
	45.2.7 Release Category CFV	45-3

TABLE OF CONTENTS (cont.)

Section	Title	Page
45.3	Direct-Release Sensitivity Case	45-4
45.4	Summary	45-4
45.5	References	45-4
CHAPTERS 46 THROUGH 48 NOT USED		
CHAPTER 49	OFFSITE DOSE RISK QUANTIFICATION	
49.1	Introduction	49-1
49.2	Conformance with Regulatory Requirements	49-2
49.3	Assumptions	49-2
49.4	Methodology	49-2
49.5	Dose Evaluation Results and Discussion	49-5
49.6	Quantification of Site Risk	49-6
49.7	Risk Quantification Results	49-7
49.8	References	49-7
CHAPTER 50	IMPORTANCE AND SENSITIVITY ANALYSIS	
50.1	Introduction	50-1
50.2	Importance Analyses for Core Damage	50-1
50.2.1	Initiating Event Importances	50-2
50.2.2	Accident Sequence Importances	50-3
50.2.3	End State Importances	50-4
50.2.4	Common Cause Failure Importances	50-4
50.2.5	Human Error Importances	50-5
50.2.6	Component Importances	50-6
50.3	System Importances for Core Damage	50-7
50.4	Human Error Sensitivity Analyses	50-8
50.4.1	Set HEPs to 1.0 (Failure) in Core Damage Output File	50-9
50.4.2	Set HEPs to 0.0 (Success) in Core Damage Output File	50-10
50.4.3	Set HEPs to 0.1 in Core Damage Output File	50-10
50.5	Other Sensitivity Analyses for Core Damage	50-10
50.5.1	Impact of Passive System Check Valves on Core Damage Frequency	50-10
50.5.2	Sensitivity to Squib Valve Failure Probability	50-11
50.5.3	Sensitivity to Circuit Breaker Failure Probability	50-11
50.5.4	Sensitivity to Standby Systems	50-12
50.6	Results	50-14
CHAPTER 51	UNCERTAINTY ANALYSIS	
51.1	Introduction	51-1
51.2	Input Data/Error Factors	51-2
51.3	Input Files	51-3
51.4	Output Files	51-3

TABLE OF CONTENTS (cont.)

Section	Title	Page
51.5	Sensitivity Analyses	51-3
51.5.1	Sensitivity to Simulation Parameters	51-3
51.5.2	Sensitivity to Key Basic Events	51-3
51.5.3	Sensitivity to Operator Actions	51-4
51.6	Summary of Results	51-6
51.7	References	51-8
ATTACHMENT 51A	ASSIGNMENT OF ERROR FACTORS TO BASIC EVENT PROBABILITIES	51A-1
ATTACHMENT 51B	@RISK UNCERTAINTY ANALYSIS RESULTS	51B-1
CHAPTERS 52 AND 53 NOT USED		
CHAPTER 54	LOW-POWER AND SHUTDOWN RISK ASSESSMENT	
54.1	Introduction	54-1
54.2	Data Analysis	54-2
54.3	Initiating Event Analysis	54-3
54.4	Event Tree/Mitigation System Evaluation	54-3
54.5	Common Cause Analysis Update for AP1000	54-3
54.6	Human Reliability Assessment for AP1000	54-5
54.7	Core Damage Quantification	54-6
54.7.1	Discussion of Results	54-9
54.8	Conclusions	54-9
CHAPTER 55	AP1000 SEISMIC MARGINS EVALUATION	
55.1	Seismic Margin HCLPF Methodology	55-1
55.2	Calculation of HCLPF Values	55-1
55.2.1	Seismic Margin HCLPF Methodology	55-1
55.2.2	Calculation of HCLPF Values	55-2
55.3	Seismic Margin Model	55-11
55.3.1	Major SMA Model Assumptions	55-11
55.3.2	Seismic Initiating Events	55-12
55.3.3	Initiating Event Category HCLPFs	55-13
55.4	Calculation of Plant HCLPF	55-16
55.4.1	HCLPFs for Basic Events	55-16
55.4.2	Calculation of Initiating Event HCLPFs	55-17
55.5	Results and Insights	55-17
55.5.1	AP1000 SMA Results	55-17
55.5.2	AP1000 SMA Insights	55-18
55.6	References	55-20

TABLE OF CONTENTS (cont.)

Section	Title	Page
CHAPTER 56	INTERNAL FLOODING ANALYSIS	
56.1	Introduction	56-1
	56.1.1 Definitions	56-1
56.2	Methodology	56-1
	56.2.1 Summary of Methodology	56-1
	56.2.2 Information Collection	56-2
	56.2.3 Initial Screening Assessment	56-2
	56.2.4 Detailed Screening Assessment	56-4
	56.2.5 Identification of Flood-Induced Initiating Events	56-5
	56.2.6 Initiating Event Frequencies	56-6
56.3	Assumptions	56-6
	56.3.1 General Flooding Analysis Assumptions and Engineering Judgments	56-6
	56.3.2 AP1000-Specific Assumptions	56-8
56.4	Information Collection	56-10
	56.4.1 PRA-Modeled Equipment and Locations	56-10
	56.4.2 Identification of Areas for Flooding Evaluation	56-10
56.5	At-Power Operations	56-10
	56.5.1 Initial Screening Assessment	56-11
	56.5.2 Detailed Screening Assessment	56-11
	56.5.3 Identification of Flood-Induced Initiating Events	56-26
	56.5.4 Calculation of Flood-Induced Initiating Event Frequencies	56-29
	56.5.5 Quantification of At-Power Flood-Induced Events	56-36
CHAPTER 57	FIRE RISK ASSESSMENT	
57.1	Introduction	57-1
57.2	Qualitative Analysis	57-1
	57.2.1 AP600 Qualitative Analysis	57-1
	57.2.2 AP1000 Qualitative Analysis	57-5
	57.2.3 AP1000 Fire Areas	57-6
57.3	Initiating Event Frequencies	57-6
	57.3.1 Introduction	57-6
	57.3.2 Methodology	57-7
	57.3.3 Results for Plant Except Containment and the Main Control Room	57-7
	57.3.4 Results for the Containment	57-7
	57.3.5 Results for the Main Control Room	57-7
57.4	Development of Fire Scenarios	57-10
	57.4.1 Spurious Actuation Model	57-11
	57.4.2 Propagation Model	57-14
	57.4.3 Fire Suppression Model	57-15
	57.4.4 Operation Actions	57-15
	57.4.5 Development of Fire Scenarios	57-16
57.5	Calculation of Conditional Core Damage Probabilities (CCDP)	57-22

TABLE OF CONTENTS (cont.)

Section	Title	Page
57.6	Calculation of CDF from Fire Events	57-23
57.6.1	Calculation of Plant Fire CDF	57-23
57.6.2	Comments on Plant Areas	57-23
57.6.3	Importances of Fire Areas	57-25
57.6.4	Conclusion	57-27
57.7	Sensitivity Studies	57-27
57.7.1	Manual Fire Suppression Systems	57-27
57.7.2	Sensitivity Analysis of the Probability of a Spurious Actuation of ADS Valves	57-27
57.7.3	Sensitivity of Human Action on Fire	57-28
57.7.4	Sensitivity Analysis on Ignition Frequencies	57-28
57.7.5	Sensitivity Analysis on ADS Actuation by DAS	57-29
57.7.6	Sensitivity Analysis on 1E to Non-1E Separation in the Containment	57-29
57.7.7	Sensitivity Analysis to Area to Area Propagation	57-30
57.7.8	Importance of Hot Shorts	57-30
57.8	Conclusion and Insights	57-30
57.9	References	57-31
ATTACHMENT 57A	CALCULATION OF SCENARIO CCDPs	57A-1
57A.1	Calculation of Scenario CCDPs	57A-1
57A.2	Calculation of Scenario CCDPs for Overly Conservative Cases	57A-3
ATTACHMENT 57B	MODELING OF OPERATOR ACTIONS IN FIRE SCENARIOS	57B-1
57B.1	Calculation of Failure Probability of OPA-01	57B-1
57B.2	Calculation of Failure Probability of OPA-02	57B-3
57B.3	Operator Actions at Remote Shutdown Panel	57B-6
57B.4	More Reliable REC-MANDAS	57B-6
ATTACHMENT 57C	FIRE AREA EVENT TREES DEFINING SCENARIOS	57C-1
ATTACHMENT 57D	AP1000 POTENTIAL FOR FIRE-INDUCED SPURIOUS ACTUATION OF FUNCTIONS THAT RESULT IN A BREACH OF HIGH/LOW PRESSURE BOUNDARY	57D-1
CHAPTER 58	WINDS, FLOODS, AND OTHER EXTERNAL EVENTS	
58.1	Introduction	58-1
58.2	External Events Analysis	58-1
58.2.1	Severe Winds and Tornadoes	58-1
58.2.2	External Floods	58-2
58.2.3	Transportation and Nearby Facility Accidents	58-2
58.3	Conclusion	58-2
58.4	References	58-3

TABLE OF CONTENTS (cont.)

Section	Title	Page
CHAPTER 59	PRA RESULTS AND INSIGHTS	
59.1	Introduction	59-1
59.2	Use of PRA in the Design Process	59-3
59.3	Core Damage Frequency from Internal Initiating Events at Power	59-4
59.3.1	Dominant Core Damage Sequences	59-6
59.3.2	Component Importances for At-Power Core Damage Frequency	59-7
59.3.3	System Importances for At-Power Core Damage	59-8
59.3.4	System Failure Probabilities for At-Power Core Damage	59-9
59.3.5	Common Cause Failure Importances for At-Power Core Damage	59-9
59.3.6	Human Error Importances for At-Power Core Damage	59-9
59.3.7	Accident Class Importances	59-10
59.3.8	Sensitivity Analyses Summary for At-Power Core Damage	59-11
59.3.9	Summary of Important Level 1 At-Power Results	59-12
59.4	Large Release Frequency for Internal Initiating Events at Power	59-15
59.4.1	Dominant Large Release Frequency Sequences	59-15
59.4.2	Summary of Important Level 2 At-Power Results	59-16
59.5	Core Damage and Severe Release Frequency from Events at Shutdown	59-19
59.5.1	Summary of Shutdown Level 1 Results	59-19
59.5.2	Large Release Frequency for Shutdown and Low-Power Events	59-22
59.5.3	Shutdown Results Summary	59-22
59.6	Results from Internal Flooding, Internal Fire, and Seismic Margin Analyses	59-23
59.6.1	Results of Internal Flooding Assessment	59-23
59.6.2	Results of Internal Fire Assessment	59-23
59.6.3	Results of Seismic Margin Analysis	59-25
59.7	Plant Dose Risk From Release of Fission-Products	59-25
59.8	Overall Plant Risk Results	59-26
59.9	Plant Features Important to Reducing Risk	59-27
59.9.1	Reactor Design	59-28
59.9.2	Systems Design	59-28
59.9.3	Instrumentation and Control Design	59-31
59.9.4	Plant Layout	59-32
59.9.5	Containment Design	59-32
59.10	PRA Input to Design Certification Process	59-36
59.10.1	PRA Input to Reliability Assurance Program	59-36
59.10.2	PRA Input to Tier 1 Information	59-36
59.10.3	PRA Input to MMI/Human Factors/Emergency Response Guidelines	59-36
59.10.4	Summary of PRA Based Insights	59-37
59.10.5	Combined License Information	59-37
59.11	References	59-38

TABLE OF CONTENTS (cont.)

Section	Title	Page
APPENDIX A	THERMAL HYDRAULIC ANALYSIS TO SUPPORT SUCCESS CRITERIA	A-1
APPENDIX B	EX-VESSEL SEVERE ACCIDENT PHENOMENA	B-1
APPENDIX C	ADDITIONAL ASSESSMENT OF AP1000 DESIGN FEATURES	C-1
APPENDIX D	EQUIPMENT SURVIVABILITY ASSESSMENT	D-1
APPENDIX E	AP1000 PRA FAULT TREE PICTURES FOR LEVEL 1 ANALYSIS FOR EVENTS AT POWER OPERATION	E-1

LIST OF TABLES

Table No.	Title	Page
2-1	Internal Initiating Event Grouping Plant Systems and Equipment Available for Transient/Accident Conditions (Sheets 1 – 10)	2-28
2-2	NUREG/CR 3862 Initiator Categories (Sheets 1 – 4)	2-38
2-3	NUREG/CR 3862 Initiator Categories not Considered in the AP1000 PRA Analysis	2-42
2-4	AP1000 Internal Initiating Event Frequencies (Sheets 1 – 3)	2-43
2-5	Initiating Event Frequencies Used in Event Trees Quantification	2-46
2A-1	Summary of Primary System Piping Data	2A-2
2A-2	Summary of Primary System Pipe Break Frequency Quantification	2A-3
2A-3	Summary of Steam Generator Tube Rupture Events	2A-4
2A-4	Spurious Stuck-Open Pressurizer Safety Valve	2A-5
2A-5	Interface Break on Accumulator Lines	2A-6
2A-6	Interface Break on IRWST Injection Lines	2A-7
2A-7	Initiating Events Review Data Summary (Sheets 1 – 8)	2A-8
2B-1	Summary of Main Steam Line and Feedwater Line Piping Data for Secondary Side Break Frequency Quantification	2B-2
2B-2	Secondary Side Line Break Frequency Quantification	2B-3
2B-3	Stuck-Open Main Steam Line Safety Valve Frequency Quantification (Sheets 1 – 2)	2B-4
3-1	Loss of CCS/SWS Initiating Event Fault Tree CSWF Success Criteria Summary	3-8
3-2	Spurious Actuation of Automatic Depressurization Failure Criteria Summary	3-9
3-3	Evaluation of Spurious Automatic Depressurization System Frequencies (Sheets 1 – 6)	3-10
4-1	AP1000 Large LOCA Event End State Summary	4-112
4-2	AP1000 Spurious ADS Actuation Event End State Summary	4-112
4-3	AP1000 Medium LOCA Event End State Summary	4-113
4-4	AP1000 CMT Line Break LOCA Event End State Summary	4-114
4-5	AP1000 SI Line Break Event End State Summary	4-115
4-6	AP1000 Small LOCA Event End State Summary	4-116
4-7	AP1000 RCS Leak Event End State Summary	4-117
4-8	AP1000 PRHR Tube Rupture Event End State Summary	4-117
4-9	AP1000 SGTR Event End State Summary	4-118
4-10	AP1000 Vessel Rupture Event End State Summary	4-119
4-11	AP1000 Interfacing Systems LOCA Event End State Summary	4-119
4-12	AP1000 Transients with MFW Event End State Summary	4-120
4-13	AP1000 Transients with Loss of RCS Flow Event End State Summary	4-121

LIST OF TABLES (cont.)

Table No.	Title	Page
4-14	AP1000 Transients with Loss of MFW to One SG Event End State Summary	4-122
4-15	AP1000 Transients with Core Power Excursion Event End State Summary	4-123
4-16	AP1000 Transients with Loss of CCW/SW Event End State Summary	4-124
4-17	AP1000 Transients without Main Feedwater Event End State Summary	4-125
4-18	AP1000 Transients with Loss of Condenser Event End State Summary	4-126
4-19	AP1000 Transients with Loss of Compressed Air Event End State Summary	4-127
4-20	AP1000 Loss of Offsite Power Event End State Summary	4-128
4-21	AP1000 SLB Downstream of MSIVs Event End State Summary	4-129
4-22	AP1000 SLB Downstream of MSIVs Event End State Summary	4-130
4-23	AP1000 Stuck Open Secondary Side Safety Valve Event End State Summary	4-131
4-24	AP1000 ATWS Precursor without MFW Event End State Summary	4-132
4-25	AP1000 ATWS Precursor with SI Event End State Summary	4-133
4-26	AP1000 ATWS Precursor Transients with MFW Event End State Summary	4-134
4A-1	End States (Plant Damage States)	4A-17
4A-2	Summary of Systems Associated with Mitigating Functions for AP1000	4A-18
5-1	AP1000 Safety-Related Plant Support Systems with Letter Designators	5-3
5-2	AP1000 Non Safety-Related Plant Support Systems with Letter Designators	5-3
5-3	AP1000 Support Systems Interdependency Matrix (Sheets 1 – 14)	5-4
5-4	AP1000 Safety-Related Front Line Plant Systems Letter Designators	5-18
5-5	AP1000 Non Safety-Related Front Line Plant Systems Letter Designators	5-18
5-6	AP1000 Front Line System Dependencies Matrix (Sheets 1 – 18)	5-19
6-1	Summary of Event Tree Top Events Success Criteria (Internal Initiating Events at Power Cases) (Sheets 1 – 34)	6-20
6-2	Summary of Success Criteria for the Mitigating Systems (Sheets 1 – 9)	6-54
6-3	Summary of Success Criteria for Operator Actions and Mission Times (Sheets 1 – 4)	6-68
7-1	Example for Fault Tree XXX Success Criteria Summary	7-15
7-2	Example for System Dependency Matrix	7-15
7-3	Example for Component Test Assumptions	7-16
7-4	Example for Component Maintenance Assumptions	7-16
7-5	Example for Operator Actions and Misposition Analysis Summary	7-16
7-6	Fault Tree Identification Codes (Sheets 1 – 3)	7-17
7-7	System Identification Codes for Basic Events (Sheets 1 – 3)	7-20
7-8	Component Identification Codes (Sheets 1 – 7)	7-23
7-9	Failure Mode Identification Codes (Sheets 1 – 3)	7-30
8-1	List of Passive Residual Heat Removal System Fault Trees	8-7
8-2a	Fault Tree "PRT" Success Criteria	8-8
8-2b	Fault Tree "PRTA" Success Criteria	8-9

LIST OF TABLES (cont.)

Table No.	Title	Page
8-2c	Fault Tree "PRL" Success Criteria	8-10
8-2d	Fault Tree "PRP" Success Criteria	8-11
8-2e	Fault Tree "PRS" Success Criteria	8-12
8-2f	Fault Tree "PRW" Success Criteria	8-13
8-2g	Fault Tree "PRI" Success Criteria	8-14
8-3	System Dependency Matrix	8-15
8-4	Component Test Assumptions	8-16
8-5	Component Maintenance Assumptions	8-17
8-6	Operator Actions and Misposition Analysis Summary	8-18
8-7	Common Cause Failures Summary	8-19
8-8	Basic Events Database for the PRHR System Fault Trees (Sheets 1 – 3)	8-20
9-1	List of System Fault Trees	9-9
9-2a	Fault Tree CM2AB Success Criteria Summary	9-10
9-2b	Fault Tree CM2SL Success Criteria Summary	9-11
9-2c	Fault Tree CM2L Success Criteria Summary	9-12
9-2d	Fault Tree CM2P Success Criteria Summary	9-13
9-2e	Fault Tree CM1A Success Criteria Summary	9-14
9-2f	Fault Tree CM2LLT Success Criteria Summary	9-15
9-2g	Fault Tree CMBOTH Success Criteria Summary	9-16
9-2h	Fault Tree CM2LA Success Criteria Summary	9-17
9-3	Notes Related to System Fault Tree Assumptions	9-18
9-4	System Dependency Matrix	9-18
9-5	Component Test Assumptions	9-19
9-6	Component Maintenance Assumptions	9-19
9-7	Operator Actions and Misposition Analysis Summary	9-20
9-8	Common Cause Failure Analysis Summary	9-20
9-9	Fault Tree Basic Events for Core Makeup Tank Subsystem (Sheets 1 – 3)	9-21
10-1	List of System Fault Trees	10-5
10-2a	Fault Tree AC2AB Success Criteria Summary	10-6
10-2b	Fault Tree AC1A Success Criteria Summary	10-7
10-2c	Fault Tree ACBOTH Success Criteria Summary	10-8
10-3	Notes Related to System Fault Tree Assumptions	10-9
10-4	System Dependency Matrix	10-9
10-5	Component Test Assumptions	10-9
10-6	Component Maintenance Assumptions	10-10
10-7	Operator Actions and Misposition Analysis Summary	10-10
10-8	Common Cause Failure Analysis Summary	10-10
10-9	Fault Tree Basic Events for Accumulator Subsystem	10-11

LIST OF TABLES (cont.)

Table No.	Title	Page
11-1a	List of ADS System Fault Trees (Sheets 1 – 2)	11-8
11-1b	List of ADS System Fault Trees (for Plant Damage States Analysis)	11-10
11-2a	ADS Success Criteria Versus Accident Conditions (Full Depressurization)	11-11
11-2b	ADS Success Criteria Versus Accident Conditions (Partial Depressurization)	11-12
11-2c	Automatic Depressurization System Fault Tree Summary (For Plant Damage States)	11-13
11-2d	Fault Tree "ADA" Success Criteria	11-13
11-2e	Fault Tree "ADAB" Success Criteria	11-14
11-2f	Fault Tree "ADAL" Success Criteria	11-15
11-2g	Fault Tree "ADB" Success Criteria	11-15
11-2h	Fault Tree "ADL" Success Criteria	11-16
11-2i	Fault Tree "ADM" Success Criteria	11-16
11-2j	Fault Tree "ADMA" Success Criteria	11-17
11-2k	Fault Tree "ADQ" Success Criteria	11-17
11-2l	Fault Tree "ADS" Success Criteria	11-18
11-2m	Fault Tree "ADT" Success Criteria	11-18
11-2n	Fault Tree "ADW" Success Criteria	11-19
11-2o	Fault Tree "AD1" Success Criteria	11-19
11-2p	Fault Tree "AD1A" Success Criteria	11-20
11-2q	Fault Tree "ADF" Success Criteria	11-20
11-2r	Fault Tree "ADR" Success Criteria	11-21
11-2s	Fault Tree "ADRA" Success Criteria	11-21
11-2t	Fault Tree "ADU" Success Criteria	11-22
11-2u	Fault Tree "ADUM" Success Criteria	11-22
11-2v	Fault Tree "ADV" Success Criteria	11-23
11-2w	Fault Tree "ADZ" Success Criteria	11-23
11-2x	Fault Tree "ADQLT" Data Summary	11-24
11-2y	Fault Tree "ADTLT" Success Criteria	11-24
11-3	Notes Related to ADS System Fault Tree Assumptions	11-25
11-4	System Dependencies Matrix	11-26
11-5	Component Test Assumptions	11-27
11-6	Component Maintenance Assumptions	11-27
11-7	Failure Probabilities Calculated	11-27
11-8	Operator Action Analysis Summary	11-28
11-9	Common Cause Failures Summary	11-28
11-10	Basic Events Data Base for the ADA System Fault Tree (Sheets 1 – 20)	11-29
12-1	List of System Fault Trees (FT)	12-10
12-2a	Fault Tree "IW2AB" Success Criteria Summary	12-11
12-2b	Fault Tree "IW2ABM" Success Criteria Summary	12-12
12-2c	Fault Tree "IW2ABA" Success Criteria Summary	12-13
12-2d	Fault Tree "IW2ABP" Success Criteria Summary	12-14
12-2e	Fault Tree "IW2ABPM" Success Criteria Summary	12-15

LIST OF TABLES (cont.)

Table No.	Title	Page
12-2f	Fault Tree "IW2ABB" Success Criteria Summary	12-16
12-2g	Fault Tree "IW2ABBM" Success Criteria Summary	12-17
12-2h	Fault Tree "IW1A" Success Criteria Summary	12-18
12-2i	Fault Tree "IW1AM" Success Criteria Summary	12-19
12-2j	Fault Tree "IWF" Success Criteria Summary	12-20
12-2k	Fault Tree "RECIRC" Success Criteria Summary	12-21
12-2l	Fault Tree "RECIRCP" Success Criteria Summary	12-22
12-2m	Fault Tree "RECIRCB" Success Criteria Summary	12-23
12-2n	Fault Tree "RECIRC1" Success Criteria Summary	12-24
12-2o	Fault Tree "RECIRC1P" Success Criteria Summary	12-25
12-2p	Fault Tree "RECIRC1B" Success Criteria Summary	12-26
12-3	System Dependency Matrix	12-27
12-4	Component Test Assumptions	12-28
12-5	Component Maintenance Assumptions	12-28
12-6	Failure Probabilities Calculated	12-29
12-7	Operator Actions and Misposition Analysis Summary	12-29
12-8	Common Cause Failure Analysis Summary	12-30
12-9	Fault Tree Basic Events (Sheets 1 – 11)	12-31
13-1	List of System Fault Trees	13-7
13-2	Fault Tree PCT Success Criteria Summary	13-7
13-3	Notes Related to System Fault Trees Assumptions	13-7
13-4	System Dependency Matrix	13-8
13-5	Component Test Assumptions	13-8
13-6	Component Maintenance Assumptions	13-9
13-7	Operator Actions and Misposition Analysis Summary	13-9
13-8	Common Cause Failure Analysis Summary	13-9
13-9	Fault Tree Basic Events for Passive Containment Cooling System	13-10
14-1	List of System Fault Trees (At-Power)	14-8
14-2.a	Success Criteria Summary Fault Tree "FWT"	14-9
14-2.b	Success Criteria Summary Fault Tree "FWF"	14-10
14-2.c	Success Criteria Summary Fault Tree "SFWT"	14-11
14-2.d	Success Criteria Summary Fault Tree "SFW"	14-12
14-2.e	Success Criteria Summary Fault Tree "SFW1"	14-13
14-2.f	Success Criteria Summary Fault Tree "SFWP"	14-14
14-2.g	Success Criteria Summary Fault Tree "SFWM"	14-15
14-2.h	Success Criteria Summary Fault Tree "SFWA"	14-16
14-2.i	Success Criteria Summary Fault Tree "COND"	14-17
14-2.j	Success Criteria Summary Fault Tree "COND1"	14-18
14-2.k	Success Criteria Summary Fault Tree "CDS"	14-19
14-2.l	Success Criteria Summary Fault Tree "TCCW"	14-20
14-3	Notes to System Fault Tree Assumptions	14-21

LIST OF TABLES (cont.)

Table No.	Title	Page
14-4	System Dependency Matrix (Sheets 1 – 2)	14-22
14-5	Component Test Assumptions	14-24
14-6	Component Maintenance Assumptions	14-25
14-7	Failure Probabilities Calculated in this Section	14-25
14-8	Operator Action Analysis Summary	14-26
14-9	Common Cause Failure (CCF) Summary	14-27
14-10	Fault Tree Basic Event for Main and Startup Feedwater System (Sheets 1 – 9)	14-28
15-1	List of System Fault Trees	15-9
15-2a	Fault Tree CSBOR1 Success Criteria Summary	15-10
15-2b	Fault Tree CVS1 Success Criteria Summary	15-11
15-2c	Fault Tree CSAX Success Criteria Summary	15-12
15-2d	Fault Tree SGHL Success Criteria Summary	15-13
15-2e	Fault Tree CSP Success Criteria Summary	15-14
15-3	Notes Related to System Fault Tree Assumptions	15-15
15-4	System Dependency Matrix	15-16
15-5	Component Test Assumptions	15-17
15-6	Component Maintenance Assumptions	15-18
15-7	Operator Actions and Misposition Analysis Summary	15-19
15-8	Common Cause Failure Analysis Summary	15-20
15-9	Fault Tree Basic Events for Chemical and Volume Control System (Sheets 1 – 4)	15-21
16-1	List of System Fault Trees	16-5
16-2	Fault Tree VLH Success Criteria Summary	16-5
16-3	Notes Related to System Fault Tree Assumptions	16-5
16-4	System Dependency Matrix	16-6
16-5	Component Test Assumptions	16-6
16-6	Component Maintenance Assumptions	16-6
16-7	Operator Actions and Misposition Analysis Summary	16-7
16-8	Common Cause Failure Analysis Summary	16-7
16-9	Fault Tree Basic Events for Containment Hydrogen Control System	16-8
17-1	List of System Fault Trees	17-7
17-2	Fault Tree Success Criteria Summary (Sheets 1 – 2)	17-8
17-3	Notes Related to System Fault Tree Assumptions	17-10
17-4	System Dependencies Matrix	17-11
17-5	Component Test Assumptions	17-12
17-6	Component Maintenance Assumptions	17-12
17-7	Operator Actions and System Misposition Analysis Summary	17-13
17-8	Common Cause Failure Summary	17-13
17-9	Fault Tree Basic Events for Normal Residual Heat Removal System (Sheets 1 – 5)	17-14

LIST OF TABLES (cont.)

Table No.	Title	Page
18-1	List of System Fault Trees	18-6
18-2a	Fault Tree CCN Success Criteria Summary	18-6
18-2b	Fault Tree CCT Success Criteria Summary	18-7
18-2c	Fault Tree CCP Success Criteria Summary	18-7
18-3	Notes Related to System Fault Tree Assumptions	18-8
18-4	System Dependency Matrix	18-8
18-5	Component Test Assumptions	18-9
18-6	Component Maintenance Assumptions	18-9
18-7	Operator Actions and Misposition Analysis Summary	18-10
18-8	Common Cause Failure Analysis Summary	18-10
18-9	Fault Tree Basic Events for Component Cooling Water System (Sheets 1 – 2)	18-11
19-1	List of System Fault Trees	19-6
19-2a	Fault Tree SWN Success Criteria Summary	19-6
19-2b	Fault Tree SWT Success Criteria Summary	19-7
19-2c	Fault Tree SWP Success Criteria Summary	19-7
19-3	Notes Related to System Fault Tree Assumptions	19-8
19-4	System Dependency Matrix	19-9
19-5	Component Test Assumptions	19-10
19-6	Component Maintenance Assumptions	19-10
19-7	Operator Actions and Misposition Analysis Summary	19-11
19-8	Common Cause Failure Analysis Summary	19-11
19-9	Fault Tree Basic Events for Service Water System (Sheets 1 – 4)	19-12
20-1	List of System Fault Trees	20-5
20-2	Fault Tree VWH Success Criteria Summary	20-5
20-3	Notes Related to System Fault Tree Assumptions	20-5
20-4	System Dependency Matrix	20-6
20-5	Component Test Assumptions	20-7
20-6	Component Maintenance Assumptions	20-7
20-7	Operator Actions and Misposition Analysis Summary	20-8
20-8	Common Cause Failure Analysis Summary	20-8
20-9	Fault Tree Basic Events for Central Chilled Water System (Sheets 1 – 2)	20-9
21-1	List of System Fault Trees (Sheets 1 – 3)	21-9
21-2	Fault Tree Success Criteria Summary (Sheets 1 – 16)	21-12
21-3	Notes Related to System Fault Tree Assumptions (Sheets 1 – 3)	21-28
21-4	System Dependency Matrix	21-31
21-5	Component Test Assumptions	21-31
21-6	Component Maintenance Assumptions	21-32
21-7	Operator Actions and Misposition Analysis Summary	21-32
21-8	Common Cause Failure Analysis Summary	21-32
21-9	Fault Tree Basic Events for AC Power System (Sheets 1 – 22)	21-33

LIST OF TABLES (cont.)

Table No.	Title	Page
22-1	List of System Fault Trees (Sheets 1 – 4)	22-6
22-2	Fault Tree Success Criteria Summary (Sheets 1 – 16)	22-10
22-3	Notes Related to System Fault Tree Assumptions	22-26
22-4	Systems Dependency Matrix	22-26
22-5	Component Test Assumptions	22-27
22-6	Component Maintenance Assumptions	22-27
22-7	Operator Actions and Misposition Analysis Summary	22-27
22-8	Common Cause Failure Analysis Summary	22-28
22-9	Fault Tree Basic Events for Class 1E DC and UPS System (Sheets 1 – 12)	22-29
22-10	System Power Requirements/Dependencies (Sheets 1 – 11)	22-41
23-1	List of System Fault Trees (Sheets 1 – 3)	23-6
23-2	Fault Tree Success Criteria Summary (Sheets 1 – 10)	23-9
23-3	Notes Related to System Fault Tree Assumptions	23-19
23-4	System Dependency Matrix	23-19
23-5	Component Test Assumptions	23-20
23-6	Component Maintenance Assumptions	23-20
23-7	Operator Actions and Misposition Analysis Summary	23-20
23-8	Common Cause Failure Analysis Summary	23-21
23-9	Fault Tree Basic Events for Non-Class 1E DC and UPS Power System (Sheets 1 – 20)	23-22
24-1	AP1000 Containment Penetration List (Sheets 1 – 4)	24-7
24-2	Screening Analysis Evaluation (Sheets 1 – 5)	24-16
24-3	Containment Penetrations Not Screened Out for Normal Operation at Power Analysis	24-21
24-4	List of System Fault Trees	24-21
24-5a	Fault Tree CIC Success Criteria Summary	24-22
24-5b	Fault Tree CIA Success Criteria Summary	24-22
24-5c	Fault Tree CIB Success Criteria Summary	24-23
24-6	Notes Related to System Fault Tree Assumptions	24-23
24-7	System Dependency Matrix (Sheets 1 – 3)	24-24
24-8	Component Test Assumptions	24-27
24-9	Component Maintenance Assumptions	24-27
24-10	Operator Actions and Misposition Analysis Summary	24-28
24-11	Common Cause Failure Analysis Summary	24-28
24-12	Fault Tree Basic Events for Containment Isolation System (Sheets 1 – 3)	24-29
25-1	List of System Fault Trees	25-8
25-2a	Fault Tree CAIAIR Success Criteria Summary	25-9
25-2b	Fault Tree CAIR Success Criteria Summary	25-9
25-2c	Fault Tree CAIAIRP Success Criteria Summary	25-10
25-2d	Fault Tree ENDCAIAI Success Criteria Summary	25-10

LIST OF TABLES (cont.)

Table No.	Title	Page
25-2e	Fault Tree ENDCAIAP Success Criteria Summary	25-11
25-2f	Fault Tree CASF Success Criteria Summary	25-11
25-3	Notes Related to System Fault Tree Assumptions	25-12
25-4	System Dependency Matrix	25-12
25-5	Component Test Assumptions	25-12
25-6	Component Maintenance Assumptions	25-13
25-7	Operator Actions and Misposition Analysis Summary	25-13
25-8	Common Cause Failure Analysis Summary	25-13
25-9	Fault Tree Basic Events for Instrument Air Subsystem (Sheets 1 – 4)	25-14
26-1	List of System Fault Trees	26-25
26-2a	Fault Tree RTPMS, and RTPMS1 Success Criteria Summary	26-26
26-2b	Fault Tree RTSTP Success Criteria Summary	26-26
26-2c	Fault Tree RCL Success Criteria Summary	26-27
26-2d.1	Fault Tree RCT Success Criteria Summary	26-27
26-2d.2	Fault Tree RCN Success Criteria Summary	26-28
26-2e	I&C Subtree Success Criteria Summary (Sheets 1 – 98)	26-29
26-3a	PMS I&C Subtree Constructions (Sheets 1 – 19)	26-127
26-3b	Representative PMS I&C Subtree Plot Listing (Sheets 1 – 14)	26-146
26-4	PMS Dependency Matrix (Sheets 1 – 3)	26-160
26-5	PMS Components Test Assumptions	26-163
26-6	Component Maintenance Assumptions	26-163
26-7	Failure Probabilities Calculated in this Section (Sheets 1 – 5)	26-164
26-8	Operator Actions and System Misposition Analysis Summary (Sheets 1 – 3)	26-169
26-9	Common Cause Failure Analysis Summary (Sheets 1 – 2)	26-172
26-10a	Fault Tree Basic Events for Reactor Trip System (Sheets 1 – 4)	26-174
26-10b	Fault Tree Basic Events for the I&C Subsystem (Sheets 1 – 49)	26-178
26-11	Assumed List of I&C Instrumentation (Sheets 1 – 3)	26-227
27-1	List of System Fault Trees	27-9
27-2a	Fault Tree DAS Success Criteria Summary	27-9
27-2b	Fault Tree DAS1 Success Criteria Summary	27-9
27-3	Notes Related to System Fault Tree Assumptions	27-10
27-4	System Dependency Matrix	27-10
27-5	Component Test Assumptions	27-10
27-6	Component Maintenance Assumptions	27-10
27-7	Operator Actions and Misposition Analysis Summary	27-10
27-8	Common Cause Failure Analysis Summary	27-11
27-9	Fault Tree Basic Events for Diverse Actuation System	27-12
28-1	List of System Fault Trees	28-20
28-2	Fault Tree Success Criteria Summary (Sheets 1 – 22)	28-21
28-3	PLS I&C Subtree Constructions (Sheets 1 – 9)	28-43

LIST OF TABLES (cont.)

Table No.	Title	Page
28-4	PLS Dependency Matrix (Sheets 1 – 2)	28-52
28-5	PLS Components Test Assumptions	28-54
28-6	Component Maintenance Assumptions	28-54
28-7	Failure Probabilities Calculated in this Section (Sheets 1 – 3)	28-55
28-8	Operator Actions and System Misposition Analysis Summary (Sheets 1 – 2)	28-58
28-9	Common Cause Failure Analysis Summary (Sheets 1 – 2)	28-60
28-10	Fault Tree Basic Events for I&C Subsystem (Sheets 1 – 68)	28-62
28-11	Assumed List of I&C Instrumentation (Sheets 1 – 3)	28-130
28-12	Assignments of Plant Systems to Logic Cabinets	28-133
28-13	Assignments of Plant Systems to the Control Group Cabinets	28-134
29-1	Electrical Components with Low CCF Rate	29-18
29-2	Common-Cause Failure Calculations (Sheets 1 – 5)	29-19
29-3	Simplification of Q_K/Q_T Equations	29-24
29A-1	Extreme Environmental Conditions (Generic Causes of Dependent Failures) Excerpted from the ANS/IEEE PRA Procedures Guide (NUREG-2300)	29A-11
29A-2	Common-Cause Failures Among Systems	29A-12
29A-3	Common-Cause Failure Equations for MGL Method	29A-13
30-1	AP1000 Human Error Probability Summary Results (Sheets 1 – 16)	30-75
30-2	Manual DAS Actuation (Sheets 1 – 2)	30-91
30-3	Dependency Level Evaluation Summary (Sheets 1 – 14)	30-93
30-4	Dependency Level Evaluation (Sheets 1 – 3)	30-107
30-5	List of Acronyms	30-110
30A-1	Analyst Responsibility Based on Sharp Steps	30A-10
30A-2	Summary of Screening Values	30A-11
30A-3	Example of Operator Action Definition	30A-12
30A-4	HEP Data Bank (Sheets 1 – 5)	30A-13
31-1	Summary of Event Tree Scalar Probabilities	31-12
32-1	Generic Data Base (Sheets 1 – 13)	32-5
32-2	Test and Maintenance Outage Generic Data	32-21
32-3	Test and Maintenance Unavailabilities Used in AP1000 Core Damage Quantification	32-22
32-4	Common Cause Factors (Sheets 1 – 5)	32-23
32-5	SIMON.OUT File (Sheets 1 – 21)	32-29
33-1	Summary of AP1000 System Fault Tree Failure Probabilities (Sheets 1 – 13)	33-7
33-2	Example Accident Sequence Definitions for Large LOCA	33-20
33-3	AP1000 PRA Dominant CDF Cutsets (Sheets 1 – 10)	33-21

LIST OF TABLES (cont.)

Table No.	Title	Page
33-4	AP1000 PRA Dominant CDF Sequences (Sheets 1 – 18)	33-31
33-5	Contribution of Initiating Events to Plant Core Damage Frequency	33-49
33-6	List of Basic Events and Their Descriptions (Sheets 1 – 33)	33-50
34-1	Post-Accident Monitoring Equipment (Sheets 1 – 2)	34-21
34-2	Level 1 Accident Class	34-23
34-3	Summary of Release Categories	34-24
34-4	3BE-1 Event Summary	34-25
34-5	3BE-2 Event Summary	34-26
34-6	3BE-4 Event Summary	34-27
34-7	3BE-5 Event Summary	34-28
34-8	3BE-6 Event Summary	34-29
34-9	3BE-7 Event Summary	34-30
34-10	3BE-3 Event Summary	34-31
34-11	3BL-1 Event Summary	34-32
34-12	3BL-2 Event Summary	34-33
34-13	3BR-1 Event Summary	34-34
34-14	3BR-1a Event Summary	34-35
34-15	3C-1 Event Summary	34-36
34-16	3C-2 Event Summary	34-37
34-17	3D-1 Event Summary	34-38
34-18	3D-2 Event Summary	34-39
34-19	3D-3 Event Summary	34-40
34-20	3D-4 Event Summary	34-41
34-21	6E-1 Event Summary	34-42
34-22	6L-1 Event Summary	34-43
34-23	1AP-1 Event Summary	34-44
34-24	1AP-2 Event Summary	34-45
34-25	1A-1 Event Summary	34-46
34-26	1A-2 Event Summary	34-47
35-1	Functional Definitions of Level 1 Accident Classes	35-21
35-2	CET Initial Conditions for Level 1 Accident Classes	35-22
35-3	Containment Event Tree Nodal Questions	35-23
35-4	Summary of Release Category Definitions	35-24
35-5	Summary of Containment Event Tree Success Criteria (Sheets 1 – 3)	35-25
35-6	Summary of Operator Actions Credited on Containment Event Tree	35-28
36-1	Summary Table for RCS Depressurization (CET Node DP)	36-6
37-1	Summary Table for Containment Isolation (CET Node IS)	37-4
38-1	Summary Table for Reflooding (CET Node RFL)	38-5

LIST OF TABLES (cont.)

Table No.	Title	Page
39-1	Material Inventories in AP1000 Reactor Vessel	39-21
39-2	Summary Table for Reactor Cavity Flooding (CET Node IR)	39-22
39-3	Summary Table for Debris Relocation to Cavity (CET Node VF)	39-22
39A-1	Core and Lower Internals Material Inventories in AP1000 Reactor Vessel	39A-14
39A-2a	Mass and Power Distributions of Debris Layers in Top-Skewed Power Shape Case	39A-15
39A-2b	Mass and Power Distributions of Debris Layers in Chopped Cosine Power Shape Case	39A-16
39A-3a	Results of Top-Skewed Power Shape Case	39A-17
39A-3b	Relocation Results of the Chopped Cosine Power Shape Case	39A-18
39A-4	Material Properties Used in In-Vessel Melting and Relocation Calculation	39A-19
39A-5	Debris Relocation Time Line	39A-20
40-1	Summary of Nodal Failure Probabilities	40-6
40-2	Nominal and Bounding Containment Failure Probability at 24 and 72 Hours	40-6
41-1	Containment Event Tree IG Nodal Failure Probability	41-33
41-2	Containment Event Tree Nodal Failure Probabilities	41-33
41-3	AP600 Scenario Dependencies for Early Detonation Analysis	41-34
41-4	Safety Margin Basis Containment Performance Requirement	41-35
41A-1	Summary of System Assumptions for AP1000 MAAP4.04 Hydrogen Analyses (Sheets 1 – 7)	41A-2
41A-2	Summary of Hydrogen Generation Results MAAP4 Hydrogen Mixing Analyses	41A-10
41A-3	Summary of Early Compartment Gas Composition Results For MAAP4 Hydrogen Mixing Analyses	41A-10
41A-4	Summary of Early Compartment Gas Composition Results for MAAP4 Hydrogen Mixing Analyses	41A-11
41A-5	Summary of Hydrogen Generation Results MAAP4 Hydrogen Mixing Analyses	41A-11
41A-6	Summary of Early Compartment Gas Composition Results for MAAP4 Hydrogen Mixing Analyses	41A-12
41A-7	Summary of Early Compartment Gas Composition Results for MAAP4 Hydrogen Mixing Analyses	41A-12
41A-8	Summary of Hydrogen Generation Results MAAP4 Hydrogen Mixing Analyses	41A-13
41A-9	Summary of Early Compartment Gas Composition Results for MAAP4 Hydrogen Mixing Analyses	41A-14
41A-10	Summary of Early Compartment Gas Composition Results for MAAP4 Hydrogen Mixing Analyses	41A-15
41A-11	Summary of Hydrogen Generation Results MAAP4 Hydrogen Mixing Analyses	41A-15
41A-12	Summary of Early Compartment Gas Composition Results for MAAP4 Hydrogen Mixing Analyses	41A-16

LIST OF TABLES (cont.)

Table No.	Title	Page
41A-13	Summary of Early Compartment Gas Composition Results for MAAP4 Hydrogen Mixing Analyses	41A-16
41A-14	Summary of Hydrogen Generation Results MAAP4 Hydrogen Mixing Analyses	41A-17
41A-15	Summary of Early Compartment Gas Composition Results for MAAP4 Hydrogen Mixing Analyses	41A-17
41A-16	Summary of Early Compartment Gas Composition Results for MAAP4 Hydrogen Mixing Analyses	41A-18
41A-17	Summary of Hydrogen Generation Results MAAP4 Hydrogen Mixing Analyses	41A-18
41A-18	Summary of Early Compartment Gas Composition Results for MAAP4 Hydrogen Mixing Analyses	41A-19
41A-19	Summary of Early Compartment Gas Composition Results for MAAP4 Hydrogen Mixing Analyses	41A-19
41A-20	Summary of Hydrogen Generation Results MAAP4 Hydrogen Mixing Analyses	41A-20
41A-21	Summary of Early Compartment Gas Composition Results for MAAP4 Hydrogen Mixing Analyses	41A-20
41A-22	Summary of Early Compartment Gas Composition Results for MAAP4 Hydrogen Mixing Analyses	41A-21
41A-23	Sequence 1A-3a	41A-22
41A-24	Sequence 1A-4a	41A-23
41A-25	Sequence 1AP-3	41A-24
41A-26	Sequence 1AP-4	41A-25
41A-27	Sequence 3D-1	41A-26
41A-28	Sequence 3D-2	41A-27
41A-29	Sequence 3D-3	41A-28
41A-30	Sequence 3D-5	41A-29
41A-31	Sequence 3BL-1	41A-30
41A-32	Sequence 3BL-2	41A-31
41A-33	Sequence 3C-1	41A-32
41A-34	Sequence 3BR-1a	41A-33
41A-35	Sequence 3BE-1	41A-34
41A-36	Sequence 3BE-2	41A-35
41A-37	Sequence 3BE-4	41A-36
41A-38	Sequence 3BE-5	41A-37
41A-39	Sequence 3BE-6	41A-38
41A-40	Sequence 3BE-8	41A-39
41A-41	Sequence 3BE-9	41A-40
42-1	Parameters Used in the Construction of the AP1000 Conditional Containment Failure Probability Distribution for Containment Temperature = 400°F	42-8
42-2	Parameters Used in the Construction of the AP1000 Conditional Containment Failure Probability Distribution for Containment Temperature = 331°F	42-8
42-3	Cumulative Containment Failure Probability, Temperature = 400°F	42-9
42-4	Cumulative Containment Failure Probability, Temperature = 331°F	42-10

LIST OF TABLES (cont.)

Table No.	Title	Page
43-1	Accident Class Frequencies	43-11
43-2	Boolean Expressions to Calculate Q1-Q29	43-12
43-3	CET Node Probabilities (Sheets 1 – 3)	43-13
43-4	Boolean Expressions for P1-P15	43-16
43-5	Contribution of PDS to LRF (Sheets 1 – 3)	43-17
43-6	Dominant CET Sequences Contributing to LRF (Sheets 1 – 69)	43-20
43-7	Summary of Release Frequency Calculations (Sheets 1 – 2)	43-89
43-8	LRF and Containment Effectiveness by Accident Class	43-91
43-9	Summary of AP1000 LRF Quantification for Internal Events At-Power	43-92
43-10	CET Event Tree Node Importances	43-93
43A-1	AP1000 PRA Dominant CDF Sequences for At-Power Events (Sheets 1 – 6)	43A-2
43A-2	AP1000 PRA PDS Frequencies for At-Power Events	43A-8
43B-1	Calculation of Failure Probability of DP for PDS 6 (Sheets 1 – 7)	43B-2
43C-1	Evaluation of CET-Related Operator Actions	43C-2
44-1	MAAP Model Benchmarks (Sheets 1 – 4)	44-8
45-1	Environmental Release Fractions at 24 Hours After Core Damage Per Release Category	45-5
45-2	Environmental Release Fractions at 72 Hours After Core Damage Per Release Category	45-6
49-1	AP1000 Source Terms from Level 2 Analysis (MAAP)	49-9
49-2	AP1000 Source Terms for Dose Evaluation (MACCS2)	49-10
49-3	Site Boundary Whole Body Dose [Effective Dose Equivalent (EDE)], Sieverts	49-11
49-4	Site Boundary Thyroid Dose, Sieverts	49-12
49-5	Population Whole Body Dose [Effective Dose Equivalent (EDE)], 0-80.5 km Person-Sieverts	49-13
49-6	Site Boundary Red Marrow Dose (Total Acute), Sieverts	49-14
49-7	Dose Summary	49-15
49-8	Site Boundary Whole Body EDE Dose Risk – 24 Hours	49-16
49-9	Site Boundary Whole Body EDE Dose Risk – 72 Hours	49-17
49-10	Population Whole Body EDE Dose Risk – 24 Hours	49-18
49-11	Population Whole Body EDE Dose Risk – 72 Hours	49-19
50-1	Core Damage for At-Power Events Contribution of Initiating Events to Plant Core Damage Frequency	50-15
50-2	Core Damage for At-Power Events Conditional Core Damage Probability of Initiating Events	50-16
50-3	AP1000 PRA Core Damage for At-Power Events Accident Sequence Importances (Sheets 1 – 5)	50-17

LIST OF TABLES (cont.)

Table No.	Title	Page
50-4	Core Damage for At-Power Events End State Importances	50-22
50-5	Common Cause Importances – Risk Decrease (Sheets 1 – 2)	50-23
50-6	Common Cause Importances – Risk Increase (Sheets 1 – 3)	50-25
50-7	Human Error Risk Importances – Risk Decrease (Sheets 1 – 2)	50-28
50-8	Human Error Risk Importances – Risk Increase (Sheets 1 – 2)	50-30
50-9	Component Importances – Risk Decrease (Sheets 1 – 2)	50-32
50-10	Component Importances – Risk Increase (Sheets 1 – 4)	50-34
50-11	List of Systems for System Importance Analyses (Sheets 1 – 4)	50-38
50-12	System Importance Calculation Results (Sheets 1 – 2)	50-42
50-13	Systems Grouped by PRA System Importance	50-44
50-14	Operator Actions in "CMTOT.OUT" File	50-45
50-15	Contribution of IEVs to Core Damage Frequency	50-46
50-16	Case 29 – Top 50 Dominant Cutsets (Sheets 1 – 2)	50-47
50-17	Case 30 – Top 50 Dominant Cutsets (Sheets 1 – 2)	50-49
50-18	Case 31 – Top 50 Dominant Cutsets (Sheets 1 – 3)	50-51
50-19	Passive System Check Valves in "CMTOT.OUT" File	50-54
50-20	Sensitivity Case 36 – Contribution of Initiating Events to CDF	50-55
50-21	Sensitivity Case 36 – Top 50 CDF Cutsets (Sheets 1 – 8)	50-56
50-22	Risk Importances Sorted by Basic Event Identification (Sheets 1 – 13)	50-64
50-23	Risk Importances Sorted by Risk Increase (Sheets 1 – 15)	50-77
50-24	Risk Importances Sorted by Risk Decrease (Sheets 1 – 15)	50-92
50-25	Risk Increases Sorted by Slope (Birnbaum) Importance (Sheets 1 – 13)	50-107
51-1	Summary of Results of AP1000 PRA Uncertainty Analysis for Internal Initiating Events at Power	51-9
51-2	List of Input Cutset Files	51-10
51A-1	Basic Event Uncertainties (Sheets 1 – 32)	51A-3
54-1	AP1000 Initiating Event Frequencies During Shutdown Conditions	54-10
54-2	AP1000 Design Impact on AP600 Shutdown Model	54-11
54-3	Times for Loss of RNS at Mid-loop w/o IRWST Injection	54-12
54-4	AP1000 & AP600 Initiating Event CDF Contributions	54-13
54-5	AP600 Shutdown Level 1 PRA Top 200 Cutsets (Sheets 1 – 25)	54-14
54-6	AP1000 Shutdown Level 1 PRA Top 200 Cutsets (Sheets 1 – 25)	54-39
55-1	Seismic Margin HCLPF Values (Sheets 1 – 4)	55-21
55-2	Basic Event HCLPF Values (Sheets 1 – 3)	55-25
55-3	EQ-IEV-STRUC HCLPF	55-28
55-4	EQ-IEV-RVFA HCLPF	55-28
55-5	EQ-IEV-LLOCA HCLPF	55-29
55-6	EQ-IEV-SLOCA HCLPF	55-29
55-7	EQ-IEV-ATWS HCLPF	55-29

LIST OF TABLES (cont.)

Table No.	Title	Page
56-1	Flooding Analysis Initial Screening Results (Sheets 1 – 3)	56-39
56-2	At-Power Detailed Screening Results (Sheets 1 – 5)	56-42
56-3	At-Power Flooding-Induced Core Damage Frequency Quantification Summary Results (Sheets 1 – 6)	56-47
56-4	Power Upgrade Difference Between AP1000 and AP600	56-53
57-1	AP1000 Fire Areas Excluding the Containment (Sheets 1 – 6)	57-33
57-2	AP1000 Fire Areas in the Containment (Sheets 1 – 2)	57-39
57-3	Fire Ignition Frequencies for AP1000 Fire Areas (Sheets 1 – 4)	57-41
57-4	Fire Ignition Frequencies for AP1000 Containment Fire Area	57-48
57-5	Fire Barrier Failure Probabilities	57-51
57-6	Automatic Suppression System Reliability	57-52
57-7	Summary of Qualitative Evaluation Results – Power Operation – Plant except Containment and Main Control Room (Sheets 1 – 15)	57-53
57-8	Summary of Qualitative Evaluation Results for Containment at Power Operation (Sheets 1 – 4)	57-72
57-9	Summary of Results (Sheets 1 – 5)	57-78
57-10	Distribution of Fire CDF Frequency by Three Major Plant Areas	57-83
57-11	Distribution of Fire CDF Frequency by Eight Plant Areas	57-84
57-12	Fire Areas Sorted by CDF (Sheets 1 – 5)	57-85
57-13	Fire Areas Sorted by CDF/FIEV (Sheets 1 – 5)	57-90
57-14	Credit for Manual Fire Suppression	57-95
57-15	Reduction of Hot Short Probability	57-96
57-16	Increase of Hot Short Probability	57-97
57-17	Sensitivity to Human Actions	57-98
57-18	Sensitivity to Fire Ignition Frequencies	57-99
57-19	Sensitivity to Actuation by DAS	57-100
57-20	Plant Fire CDF Without Hot Shorts	57-101
57-21	Contribution of the Plant Areas to CDF	57-102
57-22	Dominant Fire Scenarios (Sheets 1 – 4)	57-103
57A-1	Summary of Scenario CCDPs (Sheets 1 – 5)	57A-7
57A-2	AP1000 Base Case CCDPs for Initiating Events	57A-12
57A-3	DAS-ACT Fault Tree Cutsets Before Subtree Reduction	57A-13
57A-4	DAS-ACT Fault Tree Cutsets After Subtree Reduction (Sheets 1 – 10)	57A-14
57A-5	DAS-ACT Fault Tree Cutsets After Subtree Reduction (Sheets 1 – 9)	57A-24
57A-6	AP1000 Fire PRA Scenario CCDPs for Over-Conservative Cases (Sheets 1 – 3)	57A-33
57C-1	Data Used in Event Tree Scenario Frequency Calculations (Sheets 1 – 5)	57C-2
57C-2	CCDPs Used in Fire Event Trees (Sheets 1 – 5)	57C-7

LIST OF TABLES (cont.)

Table No.	Title	Page
59-1	Contribution of Initiating Events to Core Damage	59-39
59-2	Conditional Core Damage Probability of Initiating Events	59-40
59-3	Internal Initiating Events at Power Dominant Core Damage Sequences (Sheets 1 – 4)	59-41
59-4	Sequence 1 – Safety Injection Line Break Dominant Cutsets (SI-LB-07) (Sheets 1 – 3)	59-45
59-5	Sequence 2 – Large LOCA Dominant Cutsets (LLOCA-09)	59-48
59-6	Sequence 3 – Spurious ADS Actuation Dominant Cutsets (SPADS-08) (Sheets 1 – 3)	59-49
59-7	Sequence 4 – Safety Injection Line Break Dominant Cutsets (SI-LB-08) (Sheets 1 – 3)	59-52
59-8	Sequence 5 – Reactor Vessel Rupture Cutset (RV-RP-02)	59-55
59-9	Sequence 6 – Small LOCA Dominant Cutsets (SLOCA-05) (Sheets 1 – 3)	59-56
59-10	Sequence 7 – Medium LOCA Dominant Cutsets (MLOCA-05) (Sheets 1 – 3)	59-59
59-11	Sequence 8 – Small LOCA Dominant Cutsets (SLOCA-12) (Sheets 1 – 3)	59-62
59-12	Sequence 9 – Medium LOCA Dominant Cutsets (MLOCA-12) (Sheets 1 – 3)	59-65
59-13	Sequence 10 – Spurious ADS Actuation Dominant Cutsets (SPADS-09) (Sheets 1 – 3)	59-68
59-14	Typical System Failure Probabilities, Showing Higher Reliabilities for Safety Systems	59-71
59-15	Summary of AP1000 PRA Results	59-72
59-16	Site Boundary Whole Body EDE Dose Risk – 24 Hours	59-73
59-17	Comparison of AP1000 PRA Results to Risk Goals	59-74
59-18	AP1000 PRA-Based Insights (Sheets 1 –24)	59-75

LIST OF FIGURES

Figure No.	Title	Page
2-1	Core Damage Logic Diagram for Internal Initiators (Sheets 1 – 4)	2-47
4A-1	Example Event Tree for Illustration of Terminology	4A-19
4A-2	Functional Event Tree	4A-20
4A-3	Illustration of A/B and A&B Notation	4A-21
4A-4	Illustration of Consequential Event and ATWS End States	4A-22
4A-5	AP1000 PRA Transients Template Event Tree (Sheets 1 – 3)	4A-23
4A-6	AP1000 PRA Small LOCA Template Event Tree (Sheets 1 – 2)	4A-26
4B-1	AP1000 Large LOCA Event Tree (Sheets 1 – 2)	4B-2
4B-2	AP1000 Large Spurious ADS Actuation Event Tree (Sheets 1 – 2)	4B-4
4B-3	AP1000 Medium LOCA Event Tree (Sheets 1 – 4)	4B-6
4B-4	AP1000 CMT Line Break Event Tree (Sheets 1 – 4)	4B-10
4B-5	AP1000 SI Line Break Event Tree (Sheets 1 – 3)	4B-14
4B-6	AP1000 Small LOCA Event Tree (Sheets 1 – 6)	4B-17
4B-7	AP1000 RCS Leak Event Tree	4B-23
4B-8	AP1000 Passive RHR Tube Rupture Event Tree	4B-24
4B-9a	AP1000 Steam Generator Tube Rupture Event Tree (Sheets 1 – 3)	4B-25
4B-9b	AP1000 SGTR Continues Event Tree (Sheets 1 – 6)	4B-28
4B-10	AP1000 Reactor Vessel Rupture Event Tree	4B-34
4B-11	AP1000 Interfacing Systems LOCA Event Tree	4B-35
4B-12	AP1000 Transients With Main Feedwater Event Tree (Sheets 1 – 4)	4B-36
4B-13	AP1000 Loss of Reactor Coolant Flow Event Tree (Sheets 1 – 4)	4B-40
4B-14	AP1000 Loss of Feedwater to One SG Tree (Sheets 1 – 4)	4B-44
4B-15	AP1000 Transients With Core Power Excursion Event Tree (Sheets 1 – 4)	4B-48
4B-16	AP1000 Transients With Loss of CCW/SW Event Tree (Sheets 1 – 4)	4B-52
4B-17	AP1000 Loss of MFW Event Tree (Sheets 1 – 4)	4B-56
4B-18	AP1000 Loss of Condenser Event Tree (Sheets 1 – 4)	4B-60
4B-19	AP1000 Loss of Main Compressed Air Event Tree (Sheets 1 – 4)	4B-64
4B-20	AP1000 Loss of Offsite Power Event Tree (Sheets 1 – 7)	4B-68
4B-21	Main Steam Line Break Downstream of MSIVs Event Tree (Sheets 1 – 5)	4B-75
4B-22	Main Steam Line Break Upstream of MSIVs Event Tree (Sheets 1 – 9)	4B-80
4B-23	Stuck Open Secondary Side Safety Valve Event Tree (Sheets 1 – 5)	4B-89
4B-24a	ATWS Precursor Without Main Feedwater	4B-94
4B-24b	AP1000 ATWS Precursor Without Main Feedwater Continues Event Tree (Sheets 1 – 6)	4B-95
4B-25	ATWS Precursor With SI (Sheets 1 – 6)	4B-101
4B-26	ATWS Precursor With MFW (Sheets 1 – 4)	4B-107
7-1	Power/Control Model for Large Loads (6900-vac/480-vac Pumps, Fans, and Motors)	7-33
7-2	Power/Control Model for Motor-Operated Valves	7-35
7-3	Power/Control Model for Air-Operated Valves	7-37

LIST OF FIGURES (cont.)

Figure No.	Title	Page
7-4	Power/Control Model for Variable Speed Motor	7-39
7-5	An Illustration of Fault Tree Basic Events for a Pump Following the Model Given in Figure 7-1	7-41
8-1	PRHR – Simplified Piping and Instrumentation Diagram	8-23
8-2	PRHR – Simplified Valve Control Diagram	8-25
9-1	Passive Core Cooling System Simplified Sketch	9-24
9-2	Passive Core Cooling System Piping and Instrumentation Diagram	9-25
10-1	Passive Core Cooling System – Accumulator Subsystem	10-12
11-1	Automatic Depressurization System Simplified Piping and Instrumentation Diagram	11-49
12-1	Simplified Piping & Instrumentation Diagram of the IRWST/Gravity Injection Subsystem	12-42
13-1	Passive Containment Cooling System Sketch	13-11
15-1	Chemical and Volume Control System Piping and Instrumentation Diagram (Sheets 1 – 2)	15-25
17-1	Normal Residual Heat Removal System Sketch	17-19
18-1	Component Cooling Water System Piping and Instrumentation Diagram	18-13
19-1	Service Water System Piping and Instrumentation Diagram	19-17
20-1	Central Chilled Water Low-Capacity Subsystem Piping and Instrumentation Diagram (Sheets 1 – 2)	20-11
21-1	AC Power System One-Line Diagram	21-55
22-1	Class 1E DC System One-Line Diagram (Sheets 1 – 2)	22-53
22-2	Class 1E UPS One-Line Diagram	22-57
25-1	Compressed & Instrument Air System Piping and Instrumentation Diagram	25-19
29-1	IRWST Valve Configuration	29-25
30-1	Human Reliability Analysis Quantification Model	30-111
30A-1	Links Between SHARP Steps	30A-18

LIST OF FIGURES (cont.)

Figure No.	Title	Page
34-1	Case 3BE-1: Reactor Coolant System and Steam Generator Pressure DVI Line Break, Containment Water Level	34-48
34-2	Case 3BE-1: ADS Stage 4 Flow Rates DVI Line Break, Containment Water Level	34-48
34-3	Case 3BE-1: Accumulator/CMT Water Mass DVI Line Break, Containment Water Level	34-49
34-4	Case 3BE-1: IRWST Injection Flow Rate DVI Line Break, Containment Water Level	34-49
34-5	Case 3BE-1: Break Flow Rate DVI Line Break, Containment Water Level	34-50
34-6	Case 3BE-1: Reactor Vessel Water Level DVI Line Break, Containment Water Level	34-50
34-7	Case 3BE-1: Core Temperatures DVI Line Break, Containment Water Level	34-51
34-8	Case 3BE-1: Containment Water Pool Elevations DVI Line Break, Containment Water Level	34-51
34-9	Case 3BE-1: Containment Pressure DVI Line Break, Containment Water Level	34-52
34-10	Case 3BE-1: Containment Gas Temperatures DVI Line Break, Containment Water Level	34-52
34-11	Case 3BE-1: Core Mass DVI Line Break, Containment Water Level	34-53
34-12	Case 3BE-1: Reactor Pressure Vessel to Cavity Water Heat Transfer DVI Line Break, Containment Water Level	34-53
34-13	Case 3BE-1: In-Vessel Hydrogen Generation DVI Line Break, Containment Water Level	34-54
34-14	Case 3BE-1: Mass Fraction of CsI Released to Containment DVI Line Break, Containment Water Level	34-54
34-15	Case 3BE-1: Mass Fraction of Noble Gases Released to Environment DVI Line Break, Containment Water Level	34-55
34-16	Case 3BE-1: Mass Fraction of Fission Products Released to Environment DVI Line Break, Containment Water Level	34-55
34-17	Case 3BE-1: Mass Fraction of SrO Released to Environment DVI Line Break, Containment Water Level	34-56
34-18	Case 3BE-2: Reactor Coolant System and Steam Generator Pressure DVI Line Break, Fail Gravity Injection, No DVI Flooding	34-56
34-19	Case 3BE-2: ADS Stage 4 Flow Rates DVI Line Break, Fail Gravity Injection, No DVI Flooding	34-57
34-20	Case 3BE-2: Accumulator/CMT Water Mass DVI Line Break, Fail Gravity Injection, No DVI Flooding	34-57
34-21	Case 3BE-2: IRWST Injection Flow Rate DVI Line Break, Fail Gravity Injection, No DVI Flooding	34-58
34-22	Case 3BE-2: Break Flow Rate DVI Line Break, Fail Gravity Injection, No DVI Flooding	34-58

LIST OF FIGURES (cont.)

Figure No.	Title	Page
34-23	Case 3BE-2: Reactor Vessel Water Level DVI Line Break, Fail Gravity Injection, No DVI Flooding	34-59
34-24	Case 3BE-2: Core Temperatures DVI Line Break, Fail Gravity Injection, No DVI Flooding	34-59
34-25	Case 3BE-2: Containment Water Pool Elevations DVI Line Break, Fail Gravity Injection, No DVI Flooding	34-60
34-26	Case 3BE-2: Containment Pressure DVI Line Break, Fail Gravity Injection, No DVI Flooding	34-60
34-27	Case 3BE-2: Containment Gas Temperatures DVI Line Break, Fail Gravity Injection, No DVI Flooding	34-61
34-28	Case 3BE-2: Core Mass DVI Line Break, Fail Gravity Injection, No DVI Flooding	34-61
34-29	Case 3BE-2: Reactor Pressure Vessel to Cavity Water Heat Transfer DVI Line Break, Fail Gravity Injection, No DVI Flooding	34-62
34-30	Case 3BE-2: In-Vessel Hydrogen Generation DVI Line Break, Fail Gravity Injection, No DVI Flooding	34-62
34-31	Case 3BE-2: Mass Fraction of CsI Released to Containment DVI Line Break, Fail Gravity Injection, No DVI Flooding	34-63
34-32	Case 3BE-2: Mass Fraction of Noble Gases Released to Environment DVI Line Break, Fail Gravity Injection, No DVI Flooding	34-63
34-33	Case 3BE-2: Mass Fraction of Fission Products Released to Environment DVI Line Break, Fail Gravity Injection, No DVI Flooding	34-64
34-34	Case 3BE-2: Mass Fraction of SrO Released to Environment DVI Line Break, Fail Gravity Injection, No DVI Flooding	34-64
34-35	Case 3BE-4: Reactor Coolant System and Steam Generator Pressure Spurious ADS, Failed Gravity Injection	34-65
34-36	Case 3BE-4: ADS Stage 4 Flow Rates Spurious ADS, Failed Gravity Injection	34-65
34-37	Case 3BE-4: Accumulator/CMT Water Mass Spurious ADS, Failed Gravity Injection	34-66
34-38	Case 3BE-4: IRWST Injection Flow Rate Spurious ADS, Failed Gravity Injection	34-66
34-39	Case 3BE-4: Break Flow Rate Spurious ADS, Failed Gravity Injection	34-67
34-40	Case 3BE-4: Reactor Vessel Water Level Spurious ADS, Failed Gravity Injection	34-67
34-41	Case 3BE-4: Core Temperatures Spurious ADS, Failed Gravity Injection	34-68
34-42	Case 3BE-4: Containment Water Pool Elevations Spurious ADS, Failed Gravity Injection	34-68
34-43	Case 3BE-4: Containment Pressure Spurious ADS, Failed Gravity Injection	34-69
34-44	Case 3BE-4: Containment Gas Temperatures Spurious ADS, Failed Gravity Injection	34-69
34-45	Case 3BE-4: Core Mass Spurious ADS, Failed Gravity Injection	34-70

LIST OF FIGURES (cont.)

Figure No.	Title	Page
34-46	Case 3BE-4: Reactor Pressure Vessel to Cavity Water Heat Transfer Spurious ADS, Failed Gravity Injection	34-70
34-47	Case 3BE-4: In-Vessel Hydrogen Generation Spurious ADS, Failed Gravity Injection	34-71
34-48	Case 3BE-4: Mass Fraction of CsI Released to Containment Spurious ADS, Failed Gravity Injection	34-71
34-49	Case 3BE-4: Mass Fraction of Noble Gases Released to Environment Spurious ADS, Failed Gravity Injection	34-72
34-50	Case 3BE-4: Mass Fraction of Fission Products Released to Environment Spurious ADS, Failed Gravity Injection	34-72
34-51	Case 3BE-4: Mass Fraction of SrO Released to Environment Spurious ADS, Failed Gravity Injection	34-73
34-52	Case 3BE-5: Reactor Coolant System and Steam Generator Pressure SBLOCA with Failed Gravity Injection	34-73
34-53	Case 3BE-5: ADS Stage 4 Flow Rates SBLOCA with Failed Gravity Injection	34-74
34-54	Case 3BE-5: Accumulator/CMT Water Mass SBLOCA with Failed Gravity Injection	34-74
34-55	Case 3BE-5: IRWST Injection Flow Rate SBLOCA with Failed Gravity Injection	34-75
34-56	Case 3BE-5: Break Flow Rate SBLOCA with Failed Gravity Injection	34-75
34-57	Case 3BE-5: Reactor Vessel Water Level SBLOCA with Failed Gravity Injection	34-76
34-58	Case 3BE-5: Core Temperatures SBLOCA with Failed Gravity Injection	34-76
34-59	Case 3BE-5: Containment Water Pool Elevations SBLOCA with Failed Gravity Injection	34-77
34-60	Case 3BE-5: Containment Pressure SBLOCA with Failed Gravity Injection	34-77
34-61	Case 3BE-5: Containment Gas Temperature SBLOCA with Failed Gravity Injection	34-78
34-62	Case 3BE-5: Core Mass SBLOCA with Failed Gravity Injection	34-78
34-63	Case 3BE-5: Reactor Pressure Vessel to Cavity Water Heat Transfer SBLOCA with Failed Gravity Injection	34-79
34-64	Case 3BE-5: In-Vessel Hydrogen Generation SBLOCA with Failed Gravity Injection	34-79
34-65	Case 3BE-5: Mass Fraction of CsI Released to Containment SBLOCA with Failed Gravity Injection	34-80
34-66	Case 3BE-5: Mass Fraction of Noble Gases Released to Environment SBLOCA with Failed Gravity Injection	34-80
34-67	Case 3BE-5: Mass Fraction of Fission Products Released to Environment SBLOCA with Failed Gravity Injection	34-81
34-68	Case 3BE-5: Mass Fraction of SrO Released to Environment SBLOCA with Failed Gravity Injection	34-81

LIST OF FIGURES (cont.)

Figure No.	Title	Page
34-69	Case 3BE-6: Reactor Coolant System and Steam Generator Pressure SBLOCA with Failed Gravity Injection	34-82
34-70	Case 3BE-6: ADS Stage 4 Flow Rates SBLOCA with Failed Gravity Injection	34-82
34-71	Case 3BE-6: Accumulator/CMT Water Mass SBLOCA with Failed Gravity Injection	34-83
34-72	Case 3BE-6: IRWST Injection Flow Rate SBLOCA with Failed Gravity Injection	34-83
34-73	Case 3BE-6: Break Flow Rate SBLOCA with Failed Gravity Injection	34-84
34-74	Case 3BE-6: Reactor Vessel Water Level SBLOCA with Failed Gravity Injection	34-84
34-75	Case 3BE-6: Core Temperatures SBLOCA with Failed Gravity Injection	34-85
34-76	Case 3BE-6: Containment Water Pool Elevations SBLOCA with Failed Gravity Injection	34-85
34-77	Case 3BE-6: Containment Pressure SBLOCA with Failed Gravity Injection	34-86
34-78	Case 3BE-6: Containment Gas Temperature SBLOCA with Failed Gravity Injection	34-86
34-79	Case 3BE-6: Core Mass SBLOCA with Failed Gravity Injection	34-87
34-80	Case 3BE-6: Reactor Pressure Vessel to Cavity Water Heat Transfer SBLOCA with Failed Gravity Injection	34-87
34-81	Case 3BE-6: In-Vessel Hydrogen Generation SBLOCA with Failed Gravity Injection	34-88
34-82	Case 3BE-6: Mass Fraction of CsI Released to Containment SBLOCA with Failed Gravity Injection	34-88
34-83	Case 3BE-6: Mass Fraction of Noble Gases Released to Environment SBLOCA with Failed Gravity Injection	34-89
34-84	Case 3BE-6: Mass Fraction of Fission Products Released to Environment SBLOCA with Failed Gravity Injection	34-89
34-85	Case 3BE-6: Mass Fraction of SrO Released to Environment SBLOCA with Failed Gravity Injection	34-90
34-86	Case 3BE-7: Reactor Coolant System and Steam Generator Pressure SBLOCA with Failed Gravity Injection	34-90
34-87	Case 3BE-7: ADS Stage 4 Flow Rates SBLOCA with Failed Gravity Injection	34-91
34-88	Case 3BE-7: Accumulator/CMT Water Mass SBLOCA with Failed Gravity Injection	34-91
34-89	Case 3BE-7: IRWST Injection Flow Rate SBLOCA with Failed Gravity Injection	34-92
34-90	Case 3BE-7: Break Flow Rate SBLOCA with Failed Gravity Injection	34-92
34-91	Case 3BE-7: Reactor Vessel Water Level SBLOCA with Failed Gravity Injection	34-93
34-92	Case 3BE-7: Core Temperatures SBLOCA with Failed Gravity Injection	34-93

LIST OF FIGURES (cont.)

Figure No.	Title	Page
34-93	Case 3BE-7: Containment Water Pool Elevations SBLOCA with Failed Gravity Injection	34-94
34-94	Case 3BE-7: Containment Pressure SBLOCA with Failed Gravity Injection	34-94
34-95	Case 3BE-7: Containment Gas Temperature SBLOCA with Failed Gravity Injection	34-95
34-96	Case 3BE-7: Core Mass SBLOCA with Failed Gravity Injection	34-95
34-97	Case 3BE-7: Reactor Pressure Vessel to Cavity Water Heat Transfer SBLOCA with Failed Gravity Injection	34-96
34-98	Case 3BE-7: In-Vessel Hydrogen Generation SBLOCA with Failed Gravity Injection	34-96
34-99	Case 3BE-7: Mass Fraction of CsI Released to Containment SBLOCA with Failed Gravity Injection	34-97
34-100	Case 3BE-7: Mass Fraction of Noble Gases Released to Environment SBLOCA with Failed Gravity Injection	34-97
34-101	Case 3BE-7: Mass Fraction of Fission Products Released to Environment SBLOCA with Failed Gravity Injection	34-98
34-102	Case 3BE-7: Mass Fraction of SrO Released to Environment SBLOCA with Failed Gravity Injection	34-98
34-103	Case 3BE-3: Reactor Coolant System and Steam Generator Pressure DVI Line Break, Failed Gravity Injection, No PXS Flooding	34-99
34-104	Case 3BE-3: ADS Stage 4 Flow Rate DVI Line Break, Failed Gravity Injection, No PXS Flooding	34-99
34-105	Case 3BE-3: Accumulator/CMT Water Mass DVI Line Break, Failed Gravity Injection, No PXS Flooding	34-100
34-106	Case 3BE-3: IRWST Injection Flow Rate DVI Line Break, Failed Gravity Injection, No PXS Flooding	34-100
34-107	Case 3BE-3: Break Flow Rate DVI Line Break, Failed Gravity Injection, No PXS Flooding	34-101
34-108	Case 3BE-3: Reactor Vessel Water Level DVI Line Break, Failed Gravity Injection, No PXS Flooding	34-101
34-109	Case 3BE-3: Core Temperatures DVI Line Break, Failed Gravity Injection, No PXS Flooding	34-102
34-110	Case 3BE-3: Containment Water Pool Elevations DVI Line Break, Failed Gravity Injection, No PXS Flooding	34-102
34-111	Case 3BE-3: Containment Pressure DVI Line Break, Failed Gravity Injection, No PXS Flooding	34-103
34-112	Case 3BE-3: Containment Gas Temperature DVI Line Break, Failed Gravity Injection, No PXS Flooding	34-103
34-113	Case 3BE-3: Core Mass DVI Line Break, Failed Gravity Injection, No PXS Flooding	34-104
34-114	Case 3BE-3: Reactor Pressure Vessel to Cavity Water Heat Transfer DVI Line Break, Failed Gravity Injection, No PXS Flooding	34-104

LIST OF FIGURES (cont.)

Figure No.	Title	Page
34-115	Case 3BE-3: In-Vessel Hydrogen Generation DVI Line Break, Failed Gravity Injection, No PXS Flooding	34-105
34-116	Case 3BE-3: Mass Fraction of CsI Released to Containment DVI Line Break, Failed Gravity Injection, No PXS Flooding	34-105
34-117	Case 3BE-3: Mass Fraction of Noble Gases Released to Environment DVI Line Break, Failed Gravity Injection, No PXS Flooding	34-106
34-118	Case 3BE-3: Mass Fraction of Fission Products Released to Environment DVI Line Break, Failed Gravity Injection, No PXS Flooding	34-106
34-119	Case 3BE-3: Mass Fraction of SrO Released to Environment DVI Line Break, Failed Gravity Injection, No PXS Flooding	34-107
34-120	Case 3BL-1: Reactor Coolant System and Steam Generator Pressure SBLOCA with Failed Gravity Injection	34-107
34-121	Case 3BL-1: ADS Stage 4 Flow Rates SBLOCA with Failed Gravity Injection	34-108
34-122	Case 3BL-1: Accumulator/CMT Water Mass SBLOCA with Failed Gravity Injection	34-108
34-123	Case 3BL-1: IRWST Injection Flow Rate SBLOCA with Failed Gravity Injection	34-109
34-124	Case 3BL-1: Break Flow Rate SBLOCA with Failed Gravity Injection	34-109
34-125	Case 3BL-1: Reactor Vessel Water Level SBLOCA with Failed Gravity Injection	34-110
34-126	Case 3BL-1: Core Temperatures SBLOCA with Failed Gravity Injection	34-110
34-127	Case 3BL-1: Containment Water Pool Elevations SBLOCA with Failed Gravity Injection	34-111
34-128	Case 3BL-1: Containment Pressure SBLOCA with Failed Gravity Injection	34-111
34-129	Case 3BL-1: Containment Gas Temperature SBLOCA with Failed Gravity Injection	34-112
34-130	Case 3BL-1: Core Mass SBLOCA with Failed Gravity Injection	34-112
34-131	Case 3BL-1: Reactor Pressure Vessel to Cavity Water Heat Transfer SBLOCA with Failed Gravity Injection	34-113
34-132	Case 3BL-1: In-Vessel Hydrogen Generation SBLOCA with Failed Gravity Injection	34-113
34-133	Case 3BL-1: Mass Fraction of CsI Released to Containment SBLOCA with Failed Gravity Injection	34-114
34-134	Case 3BL-1: Mass Fraction of Noble Gases Released to Environment SBLOCA with Failed Gravity Injection	34-114
34-135	Case 3BL-1: Mass Fraction of Fission Products Released to Environment SBLOCA with Failed Gravity Injection	34-115
34-136	Case 3BL-1: Mass Fraction of SrO Released to Environment SBLOCA with Failed Gravity Injection	34-115
34-137	Case 3BL-2: Reactor Coolant System and Steam Generator Pressure DVI Line Break with Failed Gravity Injection	34-116

LIST OF FIGURES (cont.)

Figure No.	Title	Page
34-138	Case 3BL-2: ADS Stage 4 Flow Rates DVI Line Break with Failed Gravity Injection	34-116
34-139	Case 3BL-2: Accumulator/CMT Water Mass DVI Line Break with Failed Gravity Injection	34-117
34-140	Case 3BL-2: IRWST Injection Flow Rate DVI Line Break with Failed Gravity Injection	34-117
34-141	Case 3BL-2: Break Flow Rate DVI Line Break with Failed Gravity Injection	34-118
34-142	Case 3BL-2: Reactor Vessel Water Level DVI Line Break with Failed Gravity Injection	34-118
34-143	Case 3BL-2: Core Temperatures DVI Line Break with Failed Gravity Injection	34-119
34-144	Case 3BL-2: Containment Water Pool Elevations DVI Line Break with Failed Gravity Injection	34-119
34-145	Case 3BL-2: Containment Pressure DVI Line Break with Failed Gravity Injection	34-120
34-146	Case 3BL-2: Containment Gas Temperature DVI Line Break with Failed Gravity Injection	34-120
34-147	Case 3BL-2: Core Mass DVI Line Break with Failed Gravity Injection	34-121
34-148	Case 3BL-2: Reactor Pressure Vessel to Cavity Water Heat Transfer DVI Line Break with Failed Gravity Injection	34-121
34-149	Case 3BL-2: In-Vessel Hydrogen Generation DVI Line Break with Failed Gravity Injection	34-122
34-150	Case 3BL-2: Mass Fraction of CsI Released to Containment DVI Line Break with Failed Gravity Injection	34-122
34-151	Case 3BL-2: Mass Fraction of Noble Gases Released to Environment DVI Line Break with Failed Gravity Injection	34-123
34-152	Case 3BL-2: Mass Fraction of Fission Products Released to Environment DVI Line Break with Failed Gravity Injection	34-123
34-153	Case 3BL-2: Mass Fraction of SrO Released to Environment DVI Line Break with Failed Gravity Injection	34-124
34-154	Case 3BR-1: Reactor Coolant System and Steam Generator Pressure CL LBLOCA to Loop Compartment 2/2 Gravity Injection/Recirculation Lines	34-124
34-155	Case 3BR-1: ADS Stage 4 Flow Rates CL LBLOCA to Loop Compartment 2/2 Gravity Injection/Recirculation Lines	34-125
34-156	Case 3BR-1: Accumulator/CMT Water Mass CL LBLOCA to Loop Compartment 2/2 Gravity Injection/Recirculation Lines	34-125
34-157	Case 3BR-1: IRWST Injection Flow Rate CL LBLOCA to Loop Compartment 2/2 Gravity Injection/Recirculation Lines	34-126
34-158	Case 3BR-1: Break Flow Rate CL LBLOCA to Loop Compartment 2/2 Gravity Injection/Recirculation Lines	34-126
34-159	Case 3BR-1: Reactor Vessel Water Level CL LBLOCA to Loop Compartment 2/2 Gravity Injection/Recirculation Lines	34-127

LIST OF FIGURES (cont.)

Figure No.	Title	Page
34-160	Case 3BR-1: Core Temperatures CL LBLOCA to Loop Compartment 2/2 Gravity Injection/Recirculation Lines	34-127
34-161	Case 3BR-1: Containment Water Pool Elevations CL LBLOCA to Loop Compartment 2/2 Gravity Injection/Recirculation Lines	34-128
34-162	Case 3BR-1: Containment Pressure CL LBLOCA to Loop Compartment 2/2 Gravity Injection/Recirculation Lines	34-128
34-163	Case 3BR-1: Containment Gas Temperature CL LBLOCA to Loop Compartment 2/2 Gravity Injection/Recirculation Lines	34-129
34-164	Case 3BR-1: Core Mass CL LBLOCA to Loop Compartment 2/2 Gravity Injection/Recirculation Lines	34-129
34-165	Case 3BR-1: Reactor Pressure Vessel to Cavity Water Heat Transfer CL LBLOCA to Loop Compartment 2/2 Gravity Injection/Recirculation Lines	34-130
34-166	Case 3BR-1: In-Vessel Hydrogen Generation CL LBLOCA to Loop Compartment 2/2 Gravity Injection/Recirculation Lines	34-130
34-167	Case 3BR-1: Mass Fraction of CsI Released to Containment CL LBLOCA to Loop Compartment 2/2 Gravity Injection/Recirculation Lines	34-131
34-168	Case 3BR-1: Mass Fraction of Noble Gases Released to Environment CL LBLOCA to Loop Compartment 2/2 Gravity Injection/Recirculation Lines	34-131
34-169	Case 3BR-1: Mass Fraction of Fission Products Released to Environment CL LBLOCA to Loop Compartment 2/2 Gravity Injection/Recirculation Lines	34-132
34-170	Case 3BR-1: Mass Fraction of SrO Released to Environment CL LBLOCA to Loop Compartment 2/2 Gravity Injection/Recirculation Lines	34-132
34-171	Case 3BR-1a: Reactor Coolant System and Steam Generator Pressure CL LBLOCA with Failed Accumulators	34-133
34-172	Case 3BR-1a: ADS Stage 4 Flow Rates CL LBLOCA with Failed Accumulators	34-133
34-173	Case 3BR-1a: Accumulator/CMT Water Mass CL LBLOCA with Failed Accumulators	34-134
34-174	Case 3BR-1a: IRWST Injection Flow Rate CL LBLOCA with Failed Accumulators	34-134
34-175	Case 3BR-1a: Break Flow Rate CL LBLOCA with Failed Accumulators	34-135
34-176	Case 3BR-1a: Reactor Vessel Water Level CL LBLOCA with Failed Accumulators	34-135
34-177	Case 3BR-1a: Core Temperatures CL LBLOCA with Failed Accumulators	34-136
34-178	Case 3BR-1a: Containment Water Pool Elevations CL LBLOCA with Failed Accumulators	34-136
34-179	Case 3BR-1a: Containment Pressure CL LBLOCA with Failed Accumulators	34-137

LIST OF FIGURES (cont.)

Figure No.	Title	Page
34-180	Case 3BR-1a: Containment Gas Temperature CL LBLOCA with Failed Accumulators	34-137
34-181	Case 3BR-1a: Core Mass CL LBLOCA with Failed Accumulators	34-138
34-182	Case 3BR-1a: Reactor Pressure Vessel to Cavity Water Heat Transfer CL LBLOCA with Failed Accumulators	34-138
34-183	Case 3BR-1a: In-Vessel Hydrogen Generation CL LBLOCA with Failed Accumulators	34-139
34-184	Case 3BR-1a: Mass Fraction of CsI Released to Containment CL LBLOCA with Failed Accumulators	34-139
34-185	Case 3BR-1a: Mass Fraction of Noble Gases Released to Environment CL LBLOCA with Failed Accumulators	34-140
34-186	Case 3BR-1a: Mass Fraction of Fission Products Released to Environment CL LBLOCA with Failed Accumulators	34-140
34-187	Case 3BR-1a: Mass Fraction of SrO Released to Environment CL LBLOCA with Failed Accumulators	34-141
34-188	Case 3C-1: Reactor Coolant System and Steam Generator Pressure Vessel Rupture	34-141
34-189	Case 3C-1: ADS Stage 4 Flow Rates Vessel Rupture	34-142
34-190	Case 3C-1: Accumulator/CMT Water Mass Vessel Rupture	34-142
34-191	Case 3C-1: IRWST Injection Flow Rate Vessel Rupture	34-143
34-192	Case 3C-1: Break Flow Rate Vessel Rupture	34-143
34-193	Case 3C-1: Reactor Vessel Water Level Vessel Rupture	34-144
34-194	Case 3C-1: Core Temperatures Vessel Rupture	34-144
34-195	Case 3C-1: Containment Water Pool Elevations Vessel Rupture	34-145
34-196	Case 3C-1: Containment Pressure Vessel Rupture	34-145
34-197	Case 3C-1: Containment Gas Temperature Vessel Rupture	34-146
34-198	Case 3C-1: Core Mass Vessel Rupture	34-146
34-199	Case 3C-1: Reactor Pressure Vessel to Cavity Water Heat Transfer Vessel Rupture	34-147
34-200	Case 3C-1: In-Vessel Hydrogen Generation Vessel Rupture	34-147
34-201	Case 3C-1: Mass Fraction of CsI Released to Containment Vessel Rupture	34-148
34-202	Case 3C-1: Mass Fraction of Noble Gas Released to Environment Vessel Rupture	34-148
34-203	Case 3C-1: Mass Fraction of Fission Products Released to Environment Vessel Rupture	34-149
34-204	Case 3C-1: Mass Fraction of SrO Released to Environment Vessel Rupture	34-149
34-205	Case 3C-2: Reactor Coolant System and Steam Generator Pressure Vessel Rupture with Containment Failure	34-150
34-206	Case 3C-2: ADS Stage 4 Flow Rates Vessel Rupture with Containment Failure	34-150
34-207	Case 3C-2: Accumulator/CMT Water Mass Vessel Rupture with Containment Failure	34-151

LIST OF FIGURES (cont.)

Figure No.	Title	Page
34-208	Case 3C-2: IRWST Injection Flow Rate Vessel Rupture with Containment Failure	34-151
34-209	Case 3C-2: Break Flow Rate Vessel Rupture with Containment Failure	34-152
34-210	Case 3C-2: Reactor Vessel Water Level Vessel Rupture with Containment Failure	34-152
34-211	Case 3C-2: Core Temperatures Vessel Rupture with Containment Failure	34-153
34-212	Case 3C-2: Containment Water Pool Elevations Vessel Rupture with Containment Failure	34-153
34-213	Case 3C-2: Containment Pressure Vessel Rupture with Containment Failure	34-154
34-214	Case 3C-2: Containment Gas Temperature Vessel Rupture with Containment Failure	34-154
34-215	Case 3C-2: Core Mass Vessel Rupture with Containment Failure	34-155
34-216	Case 3C-2: Reactor Pressure Vessel to Cavity Water Heat Transfer Vessel Rupture with Containment Failure	34-155
34-217	Case 3C-2: In-Vessel Hydrogen Generation Vessel Rupture with Containment Failure	34-156
34-218	Case 3C-2: Mass Fraction of CsI Released to Containment Vessel Rupture with Containment Failure	34-156
34-219	Case 3C-2: Mass Fraction of Noble Gases Released to Environment Vessel Rupture with Containment Failure	34-157
34-220	Case 3C-2: Mass Fraction of Fission Products Released to Environment Vessel Rupture with Containment Failure	34-157
34-221	Case 3C-2: Mass Fraction of SrO Released to Environment Vessel Rupture with Containment Failure	34-158
34-222	Case 3D-1: Reactor Coolant System and Steam Generator Pressure Spurious ADS-4 with Failed CMTs	34-158
34-223	Case 3D-1: ADS Stage 4 Flow Rates Spurious ADS-4 with Failed CMTs	34-159
34-224	Case 3D-1: Accumulator/CMT Water Mass Spurious ADS-4 with Failed CMTs	34-159
34-225	Case 3D-1: IRWST Injection Flow Rate Spurious ADS-4 with Failed CMTs	34-160
34-226	Case 3D-1: Break Flow Rate Spurious ADS-4 with Failed CMTs	34-160
34-227	Case 3D-1: Reactor Vessel Water Level Spurious ADS-4 with Failed CMTs	34-161
34-228	Case 3D-1: Core Temperatures Spurious ADS-4 with Failed CMTs	34-161
34-229	Case 3D-1: Containment Water Pool Elevations Spurious ADS-4 with Failed CMTs	34-162
34-230	Case 3D-1: Containment Pressure Spurious ADS-4 with Failed CMTs	34-162
34-231	Case 3D-1: Containment Gas Temperature Spurious ADS-4 with Failed CMTs	34-163
34-232	Case 3D-1: Core Mass Spurious ADS-4 with Failed CMTs	34-163

LIST OF FIGURES (cont.)

Figure No.	Title	Page
34-233	Case 3D-1: Reactor Pressure Vessel to Cavity Water Heat Transfer Spurious ADS-4 with Failed CMTs	34-164
34-234	Case 3D-1: In-Vessel Hydrogen Generation Spurious ADS-4 with Failed CMTs	34-164
34-235	Case 3D-1: Mass Fraction of CsI Released to Containment Spurious ADS-4 with Failed CMTs	34-165
34-236	Case 3D-1: Mass Fraction of Noble Gases Released to Environment Spurious ADS-4 with Failed CMTs	34-165
34-237	Case 3D-1: Mass Fraction of Fission Products Released to Environment Spurious ADS-4 with Failed CMTs	34-166
34-238	Case 3D-1: Mass Fraction of SrO Released to Environment Spurious ADS-4 with Failed CMTs	34-166
34-239	Case 3D-2: Reactor Coolant System and Steam Generator Pressure Spurious ADS-2 with Failed CMTs	34-167
34-240	Case 3D-2: ADS Stage 4 Flow Rates Spurious ADS-2 with Failed CMTs	34-167
34-241	Case 3D-2: Accumulator/CMT Water Mass Spurious ADS-2 with Failed CMTs	34-168
34-242	Case 3D-2: IRWST Injection Flow Rate Spurious ADS-2 with Failed CMTs	34-168
34-243	Case 3D-2: Break Flow Rate Spurious ADS-2 with Failed CMTs	34-169
34-244	Case 3D-2: Reactor Vessel Water Level Spurious ADS-2 with Failed CMTs	34-169
34-245	Case 3D-2: Core Temperatures Spurious ADS-2 with Failed CMTs	34-170
34-246	Case 3D-2: Containment Pool Water Elevations Spurious ADS-2 with Failed CMTs	34-170
34-247	Case 3D-2: Containment Pressure Spurious ADS-2 with Failed CMTs	34-171
34-248	Case 3D-2: Containment Gas Temperature Spurious ADS-2 with Failed CMTs	34-171
34-249	Case 3D-2: Core Mass Spurious ADS-2 with Failed CMTs	34-172
34-250	Case 3D-2: Reactor Pressure Vessel to Cavity Water Heat Transfer Spurious ADS-2 with Failed CMTs	34-172
34-251	Case 3D-2: In-Vessel Hydrogen Generation Spurious ADS-2 with Failed CMTs	34-173
34-252	Case 3D-2: Mass Fraction of CsI Released to Containment Spurious ADS-2 with Failed CMTs	34-173
34-253	Case 3D-2: Mass Fraction of Noble Gas Released to Environment Spurious ADS-2 with Failed CMTs	34-174
34-254	Case 3D-2: Mass Fraction of Fission Products Released to Environment Spurious ADS-2 with Failed CMTs	34-174
34-255	Case 3D-2: Mass Fraction of SrO Released to Environment Spurious ADS-2 with Failed CMTs	34-175
34-256	Case 3D-3: Reactor Coolant System and Steam Generator Pressure DVI Line Break with Failed ADS	34-175
34-257	Case 3D-3: ADS Stage 4 Flow Rates DVI Line Break with Failed ADS	34-176

LIST OF FIGURES (cont.)

Figure No.	Title	Page
34-258	Case 3D-3: Accumulator/CMT Water Mass DVI Line Break with Failed ADS	34-176
34-259	Case 3D-3: IRWST Injection Flow Rate DVI Line Break with Failed ADS	34-177
34-260	Case 3D-3: Break Flow Rate DVI Line Break with Failed ADS	34-177
34-261	Case 3D-3: Reactor Vessel Water Level DVI Line Break with Failed ADS	34-178
34-262	Case 3D-3: Core Temperatures DVI Line Break with Failed ADS	34-178
34-263	Case 3D-3: Containment Water Pool Elevations DVI Line Break with Failed ADS	34-179
34-264	Case 3D-3: Containment Pressure DVI Line Break with Failed ADS	34-179
34-265	Case 3D-3: Containment Gas Temperature DVI Line Break with Failed ADS	34-180
34-266	Case 3D-3: Core Mass DVI Line Break with Failed ADS	34-180
34-267	Case 3D-3: Reactor Pressure Vessel to Cavity Water Heat Transfer DVI Line Break with Failed ADS	34-181
34-268	Case 3D-3: In-Vessel Hydrogen Generation DVI Line Break with Failed ADS	34-181
34-269	Case 3D-3: Mass Fraction of CsI Released to Containment DVI Line Break with Failed ADS	34-182
34-270	Case 3D-3: Mass Fraction of Noble Gases Released to Environment DVI Line Break with Failed ADS	34-182
34-271	Case 3D-3: Mass Fraction of Fission Products Released to Environment DVI Line Break with Failed ADS	34-183
34-272	Case 3D-3: Mass Fraction of SrO Released to Environment DVI Line Break with Failed ADS	34-183
34-273	Case 3D-4: Reactor Coolant System and Steam Generator Pressure Spurious ADS-2, Failed CMTs, Diffusion Flame	34-184
34-274	Case 3D-4: ADS Stage 4 Flow Rates Spurious ADS-2, Failed CMTs, Diffusion Flame	34-184
34-275	Case 3D-4: Accumulator/CMT Water Mass Spurious ADS-2, Failed CMTs, Diffusion Flame	34-185
34-276	Case 3D-4: IRWST Injection Flow Rate Spurious ADS-2, Failed CMTs, Diffusion Flame	34-185
34-277	Case 3D-4: Break Flow Rate Spurious ADS-2, Failed CMTs, Diffusion Flame	34-186
34-278	Case 3D-4: Reactor Vessel Water Level Spurious ADS-2, Failed CMTs, Diffusion Flame	34-186
34-279	Case 3D-4: Core Temperatures Spurious ADS-2, Failed CMTs, Diffusion Flame	34-187
34-280	Case 3D-4: Containment Water Pool Elevations Spurious ADS-2, Failed CMTs, Diffusion Flame	34-187
34-281	Case 3D-4: Containment Pressure Spurious ADS-2, Failed CMTs, Diffusion Flame	34-188

LIST OF FIGURES (cont.)

Figure No.	Title	Page
34-282	Case 3D-4: Containment Gas Temperature Spurious ADS-2, Failed CMTs, Diffusion Flame	34-188
34-283	Case 3D-4: Core Mass Spurious ADS-2, Failed CMTs, Diffusion Flame	34-189
34-284	Case 3D-4: Reactor Pressure Vessel to Cavity Water Heat Transfer Spurious ADS-2, Failed CMTs, Diffusion Flame	34-189
34-285	Case 3D-4: In-Vessel Hydrogen Generation Spurious ADS-2, Failed CMTs, Diffusion Flame	34-190
34-286	Case 3D-4: Mass Fraction of CsI Released to Containment Spurious ADS-2, Failed CMTs, Diffusion Flame	34-190
34-287	Case 3D-4: Mass Fraction of Noble Gases Released to Environment Spurious ADS-2, Failed CMTs, Diffusion Flame	34-191
34-288	Case 3D-4: Mass Fraction of Fission Products Released to Environment Spurious ADS-2, Failed CMTs, Diffusion Flame	34-191
34-289	Case 3D-4: Mass Fraction of SrO Release to Environment Spurious ADS-2, Failed CMTs, Diffusion Flame	34-192
34-290	Case 6E-1: Reactor Coolant System and Steam Generator Pressure SGTR Early Core Melt	34-192
34-291	Case 6E-1: ADS Stage 4 Flow Rates SGTR Early Core Melt	34-193
34-292	Case 6E-1: Accumulator/CMT Water Mass SGTR Early Core Melt	34-193
34-293	Case 6E-1: IRWST Injection Flow Rate SGTR Early Core Melt	34-194
34-294	Case 6E-1: Break Flow Rate SGTR Early Core Melt	34-194
34-295	Case 6E-1: Reactor Vessel Water Level SGTR Early Core Melt	34-195
34-296	Case 6E-1: Core Temperatures SGTR Early Core Melt	34-195
34-297	Case 6E-1: Containment Water Pool Elevations SGTR Early Core Melt	34-196
34-298	Case 6E-1: Containment Pressure SGTR Early Core Melt	34-196
34-299	Case 6E-1: Containment Gas Temperature SGTR Early Core Melt	34-197
34-300	Case 6E-1: Core Mass SGTR Early Core Melt	34-197
34-301	Case 6E-1: Reactor Pressure Vessel to Cavity Water Heat Transfer SGTR Early Core Melt	34-198
34-302	Case 6E-1: In-Vessel Hydrogen Generation SGTR Early Core Melt	34-198
34-303	Case 6E-1: Mass Fraction of CsI Released to Containment SGTR Early Core Melt	34-199
34-304	Case 6E-1: Mass Fraction of Noble Gases Released to Environment SGTR Early Core Melt	34-199
34-305	Case 6E-1: Mass Fraction of Fission Products Released to Environment SGTR Early Core Melt	34-200
34-306	Case 6E-1: Mass Fraction of SrO Released to Environment SGTR Early Core Melt	34-200
34-307	Case 6L-1: Reactor Coolant System and Steam Generator Pressure SGTR Core Melt Failure at Recirculation	34-201
34-308	Case 6L-1: ADS Stage 4 Flow Rates SGTR Core Melt Failure at Recirculation	34-201

LIST OF FIGURES (cont.)

Figure No.	Title	Page
34-309	Case 6L-1: Accumulator/CMT Water Mass SGTR Core Melt Failure at Recirculation	34-202
34-310	Case 6L-1: IRWST Injection Flow Rate SGTR Core Melt Failure at Recirculation	34-202
34-311	Case 6L-1: Break Flow Rate SGTR Core Melt Failure at Recirculation	34-203
34-312	Case 6L-1: Reactor Vessel Water Level SGTR Core Melt Failure at Recirculation	34-203
34-313	Case 6L-1: Core Temperatures SGTR Core Melt Failure at Recirculation	34-204
34-314	Case 6L-1: Containment Water Pool Elevations SGTR Core Melt Failure at Recirculation	34-204
34-315	Case 6L-1: Containment Pressure SGTR Core Melt Failure at Recirculation	34-205
34-316	Case 6L-1: Containment Gas Temperature SGTR Core Melt Failure at Recirculation	34-205
34-317	Case 6L-1: Core Mass SGTR Core Melt Failure at Recirculation	34-206
34-318	Case 6L-1: Reactor Pressure Vessel to Cavity Water Heat Transfer SGTR Core Melt Failure at Recirculation	34-206
34-319	Case 6L-1: In-Vessel Hydrogen Generation SGTR Core Melt Failure at Recirculation	34-207
34-320	Case 6L-1: Mass Fraction of CsI Released to Containment SGTR Core Melt Failure at Recirculation	34-207
34-321	Case 6L-1: Mass Fraction of Noble Gases Released to Environment SGTR Core Melt Failure at Recirculation	34-208
34-322	Case 6L-1: Mass Fraction of Fission Products Released to Environment SGTR Core Melt Failure at Recirculation	34-208
34-323	Case 6L-1: Mass Fraction of SrO Released to Environment SGTR Core Melt Failure at Recirculation	34-209
34-324	Case 1AP-1: Reactor Coolant System and Steam Generator Pressure SBLOCA with PRHR, CMTs Failed	34-209
34-325	Case 1AP-1: ADS Stage 4 Flow Rates SBLOCA with PRHR, CMTs Failed	34-210
34-326	Case 1AP-1: Accumulator/CMT Water Mass SBLOCA with PRHR, CMTs Failed	34-210
34-327	Case 1AP-1: IRWST Injection Flow Rate SBLOCA with PRHR, CMTs Failed	34-211
34-328	Case 1AP-1: Break Flow Rate SBLOCA with PRHR, CMTs Failed	34-211
34-329	Case 1AP-1: Reactor Vessel Water Level SBLOCA with PRHR, CMTs Failed	34-212
34-330	Case 1AP-1: Core Temperatures SBLOCA with PRHR, CMTs Failed	34-212
34-331	Case 1AP-1: Containment Pool Water Elevations SBLOCA with PRHR, CMTs Failed	34-213
34-332	Case 1AP-1: Containment Pressure SBLOCA with PRHR, CMTs Failed	34-213
34-333	Case 1AP-1: Containment Gas Temperature SBLOCA with PRHR, CMTs Failed	34-214

LIST OF FIGURES (cont.)

Figure No.	Title	Page
34-334	Case 1AP-1: Core Mass SBLOCA with PRHR, CMTs Failed	34-214
34-335	Case 1AP-1: Reactor Pressure Vessel to Cavity Water Heat Transfer SBLOCA with PRHR, CMTs Failed	34-215
34-336	Case 1AP-1: In-Vessel Hydrogen Generation SBLOCA with PRHR, CMTs Failed	34-215
34-337	Case 1AP-1: Mass Fraction of CsI Released to Containment SBLOCA with PRHR, CMTs Failed	34-216
34-338	Case 1AP-1: Mass Fraction of Noble Gases Released to Environment SBLOCA with PRHR, CMTs Failed	34-216
34-339	Case 1AP-1: Mass Fraction of Fission Products Released to Environment SBLOCA with PRHR, CMTs Failed	34-217
34-340	Case 1AP-1: Mass Fraction of SrO Released to Environment SBLOCA with PRHR, CMTs Failed	34-217
34-341	Case 1AP-2: Reactor Coolant System and Steam Generator Pressure SBLOCA with PRHR, CMTs Failed	34-218
34-342	Case 1AP-2: ADS Stage 4 Flow Rates SBLOCA with PRHR, CMTs Failed	34-218
34-343	Case 1AP-2: Accumulator/CMT Water Mass SBLOCA with PRHR, CMTs Failed	34-219
34-344	Case 1AP-2: IRWST Injection Flow Rate SBLOCA with PRHR, CMTs Failed	34-219
34-345	Case 1AP-2: Break Flow Rate SBLOCA with PRHR, CMTs Failed	34-220
34-346	Case 1AP-2: Reactor Vessel Water Level SBLOCA with PRHR, CMTs Failed	34-220
34-347	Case 1AP-2: Core Temperatures SBLOCA with PRHR, CMTs Failed	34-221
34-348	Case 1AP-2: Containment Water Pool Elevations SBLOCA with PRHR, CMTs Failed	34-221
34-349	Case 1AP-2: Containment Pressure SBLOCA with PRHR, CMTs Failed	34-222
34-350	Case 1AP-2: Containment Gas Temperature SBLOCA with PRHR, CMTs Failed	34-222
34-351	Case 1AP-2: Core Mass SBLOCA with PRHR, CMTs Failed	34-223
34-352	Case 1AP-2: Reactor Pressure Vessel to Cavity Water Heat Transfer SBLOCA with PRHR, CMTs Failed	34-223
34-353	Case 1AP-2: In-Vessel Hydrogen Generation SBLOCA with PRHR, CMTs Failed	34-224
34-354	Case 1AP-2: Mass Fraction of CsI Released to Containment SBLOCA with PRHR, CMTs Failed	34-224
34-355	Case 1AP-2: Mass Fraction of Noble Gases Released to Environment SBLOCA with PRHR, CMTs Failed	34-225
34-356	Case 1AP-2: Mass Fraction of Fission Products Released to Environment SBLOCA with PRHR, CMTs Failed	34-225
34-357	Case 1AP-2: Mass Fraction of SrO Released to Environment SBLOCA with PRHR, CMTs Failed	34-226

LIST OF FIGURES (cont.)

Figure No.	Title	Page
34-358	Case 1A-1: Reactor Coolant System and Steam Generator Pressure Transient with Creep of SG Tubes	34-226
34-359	Case 1A-1: ADS Stage 4 Flow Rates Transient with Creep of SG Tubes	34-227
34-360	Case 1A-1: Accumulator/CMT Water Mass Transient with Creep of SG Tubes	34-227
34-361	Case 1A-1: IRWST Injection Flow Rate Transient with Creep of SG Tubes	34-228
34-362	Case 1A-1: Break Flow Rate Transient with Creep of SG Tubes	34-228
34-363	Case 1A-1: Reactor Vessel Water Level Transient with Creep of SG Tubes	34-229
34-364	Case 1A-1: Core Temperatures Transient with Creep of SG Tubes	34-229
34-365	Case 1A-1: Containment Pool Water Elevations Transient with Creep of SG Tubes	34-230
34-366	Case 1A-1: Containment Pressure Transient with Creep of SG Tubes	34-230
34-367	Case 1A-1: Containment Gas Temperature Transient with Creep of SG Tubes	34-231
34-368	Case 1A-1: Core Mass Transient with Creep of SG Tubes	34-231
34-369	Case 1A-1: Reactor Pressure Vessel to Cavity Water Heat Transfer Transient with Creep of SG Tubes	34-232
34-370	Case 1A-1: In-Vessel Hydrogen Generation Transient with Creep of SG Tubes	34-232
34-371	Case 1A-1: Mass Fraction of CsI Released to Containment Transient with Creep of SG Tubes	34-233
34-372	Case 1A-1: Mass Fraction of Noble Gases Released to Environment Transient with Creep of SG Tubes	34-233
34-373	Case 1A-1: Mass Fraction of Fission Products Released to Environment Transient with Creep of SG Tubes	34-234
34-374	Case 1A-1: Mass Fraction of SrO Released to Environment Transient with Creep of SG Tubes	34-234
34-375	Case 1A-2: Reactor Coolant System and Steam Generator Pressure Transient with Creep of SG Tubes	34-235
34-376	Case 1A-2: ADS Stage 4 Flow Rates Transient with Creep of SG Tubes	34-235
34-377	Case 1A-2: Accumulator/CMT Water Mass Transient with Creep of SG Tubes	34-236
34-378	Case 1A-2: IRWST Injection Flow Rate Transient with Creep of SG Tubes	34-236
34-379	Case 1A-2: Break Flow Rate Transient with Creep of SG Tubes	34-237
34-380	Case 1A-2: Reactor Vessel Water Level Transient with Creep of SG Tubes	34-237
34-381	Case 1A-2: Core Temperatures Transient with Creep of SG Tubes	34-238
34-382	Case 1A-2: Containment Water Pool Elevations Transient with Creep of SG Tubes	34-238
34-383	Case 1A-2: Containment Pressure Transient with Creep of SG Tubes	34-239
34-384	Case 1A-2: Containment Gas Temperature Transient with Creep of SG Tubes	34-239
34-385	Case 1A-2: Core Mass Transient with Creep of SG Tubes	34-240

LIST OF FIGURES (cont.)

Figure No.	Title	Page
34-386	Case 1A-2: Reactor Pressure Vessel to Cavity Water Heat Transfer Transient with Creep of SG Tubes	34-240
34-387	Case 1A-2: In-Vessel Hydrogen Generation Transient with Creep of SG Tubes	34-241
34-388	Case 1A-2: Mass Fraction of CsI Released to Containment Transient with Creep of SG Tubes	34-241
34-389	Case 1A-2: Mass Fraction of Noble Gases Released to Environment Transient with Creep of SG Tubes	34-242
34-390	Case 1A-2: Mass Fraction of Fission Products Released to Environment Transient with Creep of SG Tubes	34-242
34-391	Case 1A-2: Mass Fraction of SrO Released to Environment Transient with Creep of SG Tubes	34-243
35-1	Containment Event Tree	35-29
36-1	AP1000 Accident Class 1A Base Case for Node DP Success – RCS Pressure	36-7
36-2	AP1000 Accident Class 1A Base Case for Node DP Success – Core-Exit Gas Temperature	36-8
36-3	AP1000 Accident Class 1A Base Case for Node DP Success – Steam Generator Tube Creep Damage	36-9
36-4	AP1000 Steam Generator Tube Rupture with PRHR and Stuck-Open SV – Passive RHR Heat Removal	36-10
36-5	AP1000 Steam Generator Tube Rupture with PRHR and Stuck-Open SV – Core Makeup Tank Flow (one tank)	36-11
36-6	AP1000 Steam Generator Tube Rupture with PRHR and Stuck-Open SV – Reactor Coolant System Pressure	36-12
36-7	AP1000 Steam Generator Tube Rupture with PRHR and Stuck-Open SV – Core-Exit Gas Temperature	36-13
39-1	AP1000 Base Case In-Vessel Retention of Molten Core Debris	39-23
39-2	AP1000 Core Shroud	39-24
39-3	Comparison of ULPU-2000 Configuration III and ULPU-2000 Configuration IV	39-25
39-4	Effect of Water Level on Water Circulation During IVR	39-26
39-5	ULPU-2000 Configuration IV Results (Reference 39-4)	39-27
39-6	AP1000 In-Vessel Retention of Molten Core Debris Quantification Zirconium Oxidation Fraction Input Probability Distribution	39-28
39-7	AP1000 In-Vessel Retention of Molten Core Debris Quantification Mass of Steel in Debris Input Probability Distribution	39-29
39-8	AP1000 In-Vessel Retention of Molten Core Debris Quantification Time of Final Bounding State Input Probability Distribution	39-30
39-9	AP1000 In-Vessel Retention of Molten Core Debris Quantification Height of the Oxide Layer	39-31

LIST OF FIGURES (cont.)

Figure No.	Title	Page
39-10	AP1000 In-Vessel Retention of Molten Core Debris Quantification Height of the Metal Layer	39-32
39-11	AP1000 In-Vessel Retention of Molten Core Debris Quantification Power Density in Oxide Debris	39-33
39-12	AP1000 In-Vessel Retention of Molten Core Debris Quantification Internal Rayleigh Number in the Oxide Layer	39-34
39-13	AP1000 In-Vessel Retention of Molten Core Debris Quantification External Rayleigh Number in the Metal Layer	39-35
39-14	AP1000 In-Vessel Retention of Molten Core Debris Quantification Normalized Heat Fluxes	39-36
39-15	AP1000 Passive Core Cooling System	39-37
39-16	Containment Floodable Region	39-38
39-17	Containment Floodable Region – Exploded View	39-39
39-18	AP1000 Cavity Flooding Rate	39-40
39-19	Schematic of the AP1000 Reactor Vessel, Vessel Cavity, Vessel Insulation, and Vents	39-41
39A-1	AP1000 Reactor Pressure Vessel, Core and Lower Internals	39A-21
39A-2	Core Shroud	39A-22
39A-3	Bottom of Core Shroud, Core Barrel, and Lower Core Support Plate (Not to Scale)	39A-23
39A-4	Axial Power Shapes Used for Core Relocation Analysis	39A-24
39A-5	Radial Power Shape Used for Core Relocation Analysis	39A-25
39A-6	Cross Section Geometry of Finite Difference Computational Model	39A-26
39A-7	Computational Mesh for Finite Difference Computational Model	39A-27
39A-8	MAAP4 AP1000 Core Melting and Relocation, Top-Skewed Power Shape Reactor – Coolant System Pressure	39A-28
39A-9	MAAP4 AP1000 Core Melting and Relocation, Top-Skewed Power Shape – Containment and Reactor Coolant System Pressure	39A-28
39A-10	MAAP4 AP1000 Core Melting and Relocation, Chopped Cosine Power Shape – Reactor Vessel Mixture Level	39A-29
39A-11	MAAP4 AP1000 Core Melting and Relocation, Top-Skewed Power Shape – Hottest Temperature in Core	39A-29
39A-12	MAAP4 AP1000 Core Melting and Relocation, Top-Skewed Power Shape – Mass of Hydrogen Generated in Core	39A-30
39A-13	MAAP4 AP1000 Core Melting and Relocation, Top-Skewed Power Shape Temperature of Core Shroud/Barrel (Core Elevation 1.7 – 2.0 m)	39A-30
39A-14	MAAP4 AP1000 Core Melting and Relocation, Top-Skewed Power Shape Temperature of Core Shroud/Barrel (Core Elevation 2.0 – 2.3 m)	39A-31
39A-15	MAAP4 AP1000 Core Melting and Relocation, Top-Skewed Power Shape – Mass of Core Shroud/Barrel	39A-31
39A-16	MAAP4 AP1000 Core Melting and Relocation, Top-Skewed Power Shape Volume of Debris in Reactor Vessel Lower Plenum	39A-32

LIST OF FIGURES (cont.)

Figure No.	Title	Page
39A-17	MAAP4 AP1000 Core Melting and Relocation, Chopped Cosine Power Shape – Reactor Coolant System Pressure	39A-32
39A-18	MAAP4 AP1000 Core Melting and Relocation, Chopped Cosine Power Shape – Containment and Reactor Coolant System Pressure	39A-33
39A-19	MAAP4 AP1000 Core Melting and Relocation, Chopped Cosine Power Shape – Reactor Vessel Mixture Level	39A-33
39A-20	MAAP4 AP1000 Core Melting and Relocation, Chopped Cosine Power Shape – Hottest Temperature in Core	39A-34
39A-21	MAAP4 AP1000 Core Melting and Relocation, Chopped Cosine Power Shape – Mass of Hydrogen Generated in Core	39A-34
39A-22	MAAP4 AP1000 Core Melting and Relocation, Chopped Cosine Power Shape Temperature of Core Shroud/Barrel (Core Elevation 1.1 – 1.4 m)	39A-35
39A-23	MAAP4 AP1000 Core Melting and Relocation, Chopped Cosine Power Shape Temperature of Core Shroud/Barrel (Core Elevation 1.4 – 1.7 m)	39A-35
39A-24	MAAP4 AP1000 Core Melting and Relocation, Chopped Cosine Power Shape – Mass of Core Shroud/Barrel	39A-36
39A-25	MAAP4 AP1000 Core Melting and Relocation, Chopped Cosine Power Shape Volume of Debris in Reactor Vessel Lower Plenum	39A-36
39A-26	Initial Oxide Relocation to Lower Plenum	39A-37
39A-27	Finite Difference Result for Top-Skewed Power Shape at Level 5	39A-38
39A-28	Finite Difference Temperature Map Level 5 at 5380 Seconds for Top-Skewed Power Shape Case	39A-38
39A-29	MAAP4 Core Temperature Profile for Top-Skewed Power Shape Core Elevation = 2.0 – 2.3 m Above Bottom of Active Fuel (Core Axial Row 12)	39A-39
39A-30	Relocation of Corium	39A-39
39A-31	Model for Relocation to Lower Plenum	39A-40
40-1	AP1000 Passive Containment Cooling System	40-7
40-2	Schematic of Passive Containment Cooling System Piping	40-8
40-3	AP1000 Containment Venting Pressure Response	40-9
40-4	AP1000 Containment Venting Loss of Containment Air	40-10
40-5	AP1000 Dry PCS Containment Pressure Response	40-11
40-6	AP1000 Dry PCS Containment Temperature Response	40-12
41-1	IRWST Hydrogen Venting	41-36
41-2	Accident Class 3BE Early Detonation Decomposition Event Tree – Given RFL Success	41-37
41-3	Accident Class 3BE Early Detonation Decomposition Event Tree – Given RFL Failure	41-38
41-4	Accident Class 3BL Early Detonation Decomposition Event Tree	41-39
41-5	Accident Class 3C/3BR Early Detonation Decomposition Event Tree	41-40
41-6	Accident Class 3D/1D Early Detonation Decomposition Event Tree	41-41
41-7	Accident Class 1AP Early Detonation Decomposition Event Tree	41-42

LIST OF FIGURES (cont.)

Figure No.	Title	Page
41-8	Boil-Off Hydrogen Generation Probability Density Function	41-43
41-9	No Reflood Pre-Burn Containment Pressure Probability Density Function	41-44
41-10	No-Reflood Hydrogen Deflagration Peak Pressure Probability	41-45
41-11	Early Reflood Hydrogen Generation Probability Density Function	41-46
41-12	Early Reflood Pre-Burn Containment Pressure Probability Density Function	41-47
41-13	Early Reflood Hydrogen Deflagration Peak Pressure Probability	41-48
41-14	Late Reflood Hydrogen Generation Probability Density Function	41-49
41-15	Late Reflood Pre-Burn Containment Pressure Probability Density Function	41-50
41-16	Late Reflood Hydrogen Deflagration Peak Pressure Probability	41-51
41-17	Accident Class 3BE Intermediate Detonation Decomposition Event Tree – Given RFL Success	41-52
41-18	Accident Class 3BE Intermediate Detonation Decomposition Event Tree – Given RFL Failure	41-53
41-19	Accident Class 3BL Intermediate Detonation Decomposition Event Tree	41-54
41-20	Accident Class 3C/3BR Intermediate Detonation Decomposition Event Tree	41-55
41-21	Accident Class 3D/1D Intermediate Detonation Decomposition Event Tree	41-56
41-22	Accident Class 1AP Intermediate Detonation Decomposition Event Tree	41-57
41A-1	Case 3BE-1: Reactor Coolant System Pressure DVI Line Break for Containment Water Level	41A-41
41A-2	Case 3BE-1: Core-Exit Gas Temperature DVI Line Break for Containment Water Level	41A-41
41A-3	Case 3BE-1: Reactor Vessel Mixture Level DVI Line Break for Containment Water Level	41A-42
41A-4	Case 3BE-1: Hydrogen Generated In-Vessel DVI Line Break for Containment Water Level	41A-42
41A-5	Case 3BE-1: Containment Pressure DVI Line Break for Containment Water Level	41A-43
41A-6	Case 3BE-1: Containment Gas Temperature DVI Line Break for Containment Water Level	41A-43
41A-7	Case 3BE-1: Containment Compartments Water Level DVI Line Break for Containment Water Level	41A-44
41A-8	Case 3BE-1: Well-Mixed Compartment Hydrogen Concentration DVI Line Break for Containment Water Level	41A-44
41A-9	Case 3BE-1: Well-Mixed Compartment Steam Concentration DVI Line Break for Containment Water Level	41A-45
41A-10	Case 3BE-1: Well-Mixed Compartment Oxygen Concentration DVI Line Break for Containment Water Level	41A-45
41A-11	Case 3BE-1: Confined Compartment Hydrogen Concentration DVI Line Break for Containment Water Level	41A-46
41A-12	Case 3BE-1: Confined Compartment Steam Concentration DVI Line Break for Containment Water Level	41A-46

LIST OF FIGURES (cont.)

Figure No.	Title	Page
41A-13	Case 3BE-1: Confined Compartment Oxygen Concentration DVI Line Break for Containment Water Level	41A-47
41A-14	Case 3BE-1: Equivalence Ratio in SG Room DVI Line Break for Containment Water Level	41A-47
41A-15	Case 3BE-1: Equivalence Ratio in CMT Room DVI Line Break for Containment Water Level	41A-48
41A-16	Case 3BE-1: Equivalence Ratio in IRWST DVI Line Break for Containment Water Level	41A-48
41A-17	Case 3BE-1: Equivalence Ratio in PXS DVI Line Break for Containment Water Level	41A-49
41A-18	Case 3BE-2: Reactor Coolant System Pressure DVI Line Break with Failed Gravity Injection and No PXS Flooding	41A-49
41A-19	Case 3BE-2: Core-Exit Gas Temperature DVI Line Break with Failed Gravity Injection and No PXS Flooding	41A-50
41A-20	Case 3BE-2: Reactor Vessel Mixture Level DVI Line Break with Failed Gravity Injection and No PXS Flooding	41A-50
41A-21	Case 3BE-2: Hydrogen Generated In-Vessel DVI Line Break with Failed Gravity Injection and No PXS Flooding	41A-51
41A-22	Case 3BE-2: Containment Pressure DVI Line Break with Failed Gravity Injection and No PXS Flooding	41A-51
41A-23	Case 3BE-2: Containment Gas Temperature DVI Line Break with Failed Gravity Injection and No PXS Flooding	41A-52
41A-24	Case 3BE-2: Containment Compartments Water Level DVI Line Break with Failed Gravity Injection and No PXS Flooding	41A-52
41A-25	Case 3BE-2: Well-Mixed Compartment Hydrogen Concentration DVI Line Break with Failed Gravity Injection and No PXS Flooding	41A-53
41A-26	Case 3BE-2: Well-Mixed Compartment Steam Concentration DVI Line Break with Failed Gravity Injection and No PXS Flooding	41A-53
41A-27	Case 3BE-2: Well-Mixed Compartment Oxygen Concentration DVI Line Break with Failed Gravity Injection and No PXS Flooding	41A-54
41A-28	Case 3BE-2: Confined Compartment Hydrogen Concentration DVI Line Break with Failed Gravity Injection and No PXS Flooding	41A-54
41A-29	Case 3BE-2: Confined Compartment Steam Concentration DVI Line Break with Failed Gravity Injection and No PXS Flooding	41A-55
41A-30	Case 3BE-2: Confined Compartment Oxygen Concentration DVI Line Break with Failed Gravity Injection and No PXS Flooding	41A-55
41A-31	Case 3BE-2: Equivalence Ratio in SG Room DVI Line Break with Failed Gravity Injection and No PXS Flooding	41A-56
41A-32	Case 3BE-2: Equivalence Ratio in CMT Room DVI Line Break with Failed Gravity Injection and No PXS Flooding	41A-56
41A-33	Case 3BE-2: Equivalence Ratio in IRWST DVI Line Break with Failed Gravity Injection and No PXS Flooding	41A-57

LIST OF FIGURES (cont.)

Figure No.	Title	Page
41A-34	Case 3BE-2: Equivalence Ratio in PXS DVI Line Break with Failed Gravity Injection and No PXS Flooding	41A-57
41A-35	Case 3BE-4: Reactor Coolant System Pressure Spurious ADS, Failed Gravity Injection	41A-58
41A-36	Case 3BE-4: Core-Exit Gas Temperature Spurious ADS, Failed Gravity Injection	41A-58
41A-37	Case 3BE-4: Reactor Vessel Mixture Level Spurious ADS, Failed Gravity Injection	41A-59
41A-38	Case 3BE-4: Hydrogen Generated In-Vessel Spurious ADS, Failed Gravity Injection	41A-59
41A-39	Case 3BE-4: Containment Pressure Spurious ADS, Failed Gravity Injection	41A-60
41A-40	Case 3BE-4: Containment Gas Temperature Spurious ADS, Failed Gravity Injection	41A-60
41A-41	Case 3BE-4: Containment Compartments Water Level Spurious ADS, Failed Gravity Injection	41A-61
41A-42	Case 3BE-4: Well-Mixed Compartment Hydrogen Concentration Spurious ADS, Failed Gravity Injection	41A-61
41A-43	Case 3BE-4: Well-Mixed Compartment Steam Concentration Spurious ADS, Failed Gravity Injection	41A-62
41A-44	Case 3BE-4: Well-Mixed Compartment Oxygen Concentration Spurious ADS, Failed Gravity Injection	41A-62
41A-45	Case 3BE-4: Confined Compartment Hydrogen Concentration Spurious ADS, Failed Gravity Injection	41A-63
41A-46	Case 3BE-4: Confined Compartment Steam Concentration Spurious ADS, Failed Gravity Injection	41A-63
41A-47	Case 3BE-4: Confined Compartment Oxygen Concentration Spurious ADS, Failed Gravity Injection	41A-64
41A-48	Case 3BE-4: Equivalence Ratio in SG Room Spurious ADS, Failed Gravity Injection	41A-64
41A-49	Case 3BE-4: Equivalence Ratio in CMT Room Spurious ADS, Failed Gravity Injection	41A-65
41A-50	Case 3BE-4: Equivalence Ratio in IRWST Spurious ADS, Failed Gravity Injection	41A-65
41A-51	Case 3BE-4: Equivalence Ratio in PXS Spurious ADS, Failed Gravity Injection	41A-66
41A-52	Case 3BE-5: Reactor Coolant System Pressure SBLOCA with Failed Gravity Injection	41A-66
41A-53	Case 3BE-5: Core-Exit Gas Temperature SBLOCA with Failed Gravity Injection	41A-67
41A-54	Case 3BE-5: Reactor Vessel Mixture Level SBLOCA with Failed Gravity Injection	41A-67
41A-55	Case 3BE-5: Hydrogen Generated In-Vessel SBLOCA with Failed Gravity Injection	41A-68

LIST OF FIGURES (cont.)

Figure No.	Title	Page
41A-56	Case 3BE-5: Containment Pressure SBLOCA with Failed Gravity Injection	41A-68
41A-57	Case 3BE-5: Containment Gas Temperature SBLOCA with Failed Gravity Injection	41A-69
41A-58	Case 3BE-5: Containment Compartments Water Level SBLOCA with Failed Gravity Injection	41A-69
41A-59	Case 3BE-5: Well-Mixed Compartment Hydrogen Concentration SBLOCA with Failed Gravity Injection	41A-70
41A-60	Case 3BE-5: Well-Mixed Compartment Steam Concentration SBLOCA with Failed Gravity Injection	41A-70
41A-61	Case 3BE-5: Well-Mixed Compartment Oxygen Concentration SBLOCA with Failed Gravity Injection	41A-71
41A-62	Case 3BE-5: Confined Compartment Hydrogen Concentration SBLOCA with Failed Gravity Injection	41A-71
41A-63	Case 3BE-5: Confined Compartment Steam Concentration SBLOCA with Failed Gravity Injection	41A-72
41A-64	Case 3BE-5: Confined Compartment Oxygen Concentration SBLOCA with Failed Gravity Injection	41A-72
41A-65	Case 3BE-5: Equivalence Ratio in SG Room SBLOCA with Failed Gravity Injection	41A-73
41A-66	Case 3BE-5: Equivalence Ratio in CMT Room SBLOCA with Failed Gravity Injection	41A-73
41A-67	Case 3BE-5: Equivalence Ratio in IRWST SBLOCA with Failed Gravity Injection	41A-74
41A-68	Case 3BE-5: Equivalence Ratio in PXS SBLOCA with Failed Gravity Injection	41A-74
41A-69	Case 3BE-6: Reactor Coolant System Pressure SBLOCA with Failed Gravity Injection	41A-75
41A-70	Case 3BE-6: Core-Exit Gas Temperature SBLOCA with Failed Gravity Injection	41A-75
41A-71	Case 3BE-6: Reactor Vessel Mixture Level SBLOCA with Failed Gravity Injection	41A-76
41A-72	Case 3BE-6: Hydrogen Generated In-Vessel SBLOCA with Failed Gravity Injection	41A-76
41A-73	Case 3BE-6: Containment Pressure SBLOCA with Failed Gravity Injection	41A-77
41A-74	Case 3BE-6: Containment Gas Temperature SBLOCA with Failed Gravity Injection	41A-77
41A-75	Case 3BE-6: Containment Compartments Water Level SBLOCA with Failed Gravity Injection	41A-78
41A-76	Case 3BE-6: Well-Mixed Compartment Hydrogen Concentration SBLOCA with Failed Gravity Injection	41A-78
41A-77	Case 3BE-6: Well-Mixed Compartment Steam Concentration SBLOCA with Failed Gravity Injection	41A-79

LIST OF FIGURES (cont.)

Figure No.	Title	Page
41A-78	Case 3BE-6: Well-Mixed Compartment Oxygen Concentration SBLOCA with Failed Gravity Injection	41A-79
41A-79	Case 3BE-6: Confined Compartment Hydrogen Concentration SBLOCA with Failed Gravity Injection	41A-80
41A-80	Case 3BE-6: Confined Compartment Steam Concentration SBLOCA with Failed Gravity Injection	41A-80
41A-81	Case 3BE-6: Confined Compartment Oxygen Concentration SBLOCA with Failed Gravity Injection	41A-81
41A-82	Case 3BE-6: Equivalence Ratio in SG Room SBLOCA with Failed Gravity Injection	41A-81
41A-83	Case 3BE-6: Equivalence Ratio in CMT Room SBLOCA with Failed Gravity Injection	41A-82
41A-84	Case 3BE-6: Equivalence Ratio in IRWST SBLOCA with Failed Gravity Injection	41A-82
41A-85	Case 3BE-6: Equivalence Ratio in PXS SBLOCA with Failed Gravity Injection	41A-83
41A-86	Case 3BE-8: Reactor Coolant System Pressure SGTR	41A-83
41A-87	Case 3BE-8: Core-Exit Gas Temperature SGTR	41A-84
41A-88	Case 3BE-8: Reactor Vessel Mixture Level SGTR	41A-84
41A-89	Case 3BE-8: Hydrogen Generated In-Vessel SGTR	41A-85
41A-90	Case 3BE-8: Containment Pressure SGTR	41A-85
41A-91	Case 3BE-8: Containment Gas Temperature SGTR	41A-86
41A-92	Case 3BE-8: Containment Compartments Water Level SGTR	41A-86
41A-93	Case 3BE-8: Well-Mixed Compartment Hydrogen Concentration SGTR	41A-87
41A-94	Case 3BE-8: Well-Mixed Compartment Steam Concentration SGTR	41A-87
41A-95	Case 3BE-8: Well-Mixed Compartment Oxygen Concentration SGTR	41A-88
41A-96	Case 3BE-8: Confined Compartment Hydrogen Concentration SGTR	41A-88
41A-97	Case 3BE-8: Confined Compartment Steam Concentration SGTR	41A-89
41A-98	Case 3BE-8: Confined Compartment Oxygen Concentration SGTR	41A-89
41A-99	Case 3BE-8: Equivalence Ratio in SG Room SGTR	41A-90
41A-100	Case 3BE-8: Equivalence Ratio in CMT Room SGTR	41A-90
41A-101	Case 3BE-8: Equivalence Ratio in IRWST SGTR	41A-91
41A-102	Case 3BE-8: Equivalence Ratio in PXS SGTR	41A-91
41A-103	Case 3BE-9: Reactor Coolant System Pressure SGTR	41A-92
41A-104	Case 3BE-9: Core-Exit Gas Temperature SGTR	41A-92
41A-105	Case 3BE-9: Reactor Vessel Mixture Level SGTR	41A-93
41A-106	Case 3BE-9: Hydrogen Generated In-Vessel SGTR	41A-93
41A-107	Case 3BE-9: Containment Pressure SGTR	41A-94
41A-108	Case 3BE-9: Containment Gas Temperature SGTR	41A-94
41A-109	Case 3BE-9: Containment Compartments Water Level SGTR	41A-95
41A-110	Case 3BE-9: Well-Mixed Compartment Hydrogen Concentration SGTR	41A-95
41A-111	Case 3BE-9: Well-Mixed Compartment Steam Concentration SGTR	41A-96
41A-112	Case 3BE-9: Well-Mixed Compartment Oxygen Concentration SGTR	41A-96

LIST OF FIGURES (cont.)

Figure No.	Title	Page
41A-113	Case 3BE-9: Confined Compartment Hydrogen Concentration SGTR	41A-97
41A-114	Case 3BE-9: Confined Compartment Steam Concentration SGTR	41A-97
41A-115	Case 3BE-9: Confined Compartment Oxygen Concentration SGTR	41A-98
41A-116	Case 3BE-9: Equivalence Ratio in SG Room SGTR	41A-98
41A-117	Case 3BE-9: Equivalence Ratio in CMT Room SGTR	41A-99
41A-118	Case 3BE-9: Equivalence Ratio in IRWST SGTR	41A-99
41A-119	Case 3BE-9: Equivalence Ratio in PXS SGTR	41A-100
41A-120	Case 3BL-1: Reactor Coolant System Pressure SBLOCA with Failed Gravity Recirculation	41A-100
41A-121	Case 3BL-1: Core-Exit Gas Temperature SBLOCA with Failed Gravity Recirculation	41A-101
41A-122	Case 3BL-1: Reactor Vessel Mixture Level SBLOCA with Failed Gravity Recirculation	41A-101
41A-123	Case 3BL-1: Hydrogen Generated In-Vessel SBLOCA with Failed Gravity Recirculation	41A-102
41A-124	Case 3BL-1: Containment Pressure SBLOCA with Failed Gravity Recirculation	41A-102
41A-125	Case 3BL-1: Containment Gas Temperature SBLOCA with Failed Gravity Recirculation	41A-103
41A-126	Case 3BL-1: Containment Compartments Water Level SBLOCA with Failed Gravity Recirculation	41A-103
41A-127	Case 3BL-1: Well-Mixed Compartment Hydrogen Concentration SBLOCA with Failed Gravity Recirculation	41A-104
41A-128	Case 3BL-1: Well-Mixed Compartment Steam Concentration SBLOCA with Failed Gravity Recirculation	41A-104
41A-129	Case 3BL-1: Well-Mixed Compartment Oxygen Concentration SBLOCA with Failed Gravity Recirculation	41A-105
41A-130	Case 3BL-1: Confined Compartment Hydrogen Concentration SBLOCA with Failed Gravity Recirculation	41A-105
41A-131	Case 3BL-1: Confined Compartment Steam Concentration SBLOCA with Failed Gravity Recirculation	41A-106
41A-132	Case 3BL-1: Confined Compartment Oxygen Concentration SBLOCA with Failed Gravity Recirculation	41A-106
41A-133	Case 3BL-1: Equivalence Ratio in SG Room SBLOCA with Failed Gravity Recirculation	41A-107
41A-134	Case 3BL-1: Equivalence Ratio in CMT Room SBLOCA with Failed Gravity Recirculation	41A-107
41A-135	Case 3BL-1: Equivalence Ratio in IRWST SBLOCA with Failed Gravity Recirculation	41A-108
41A-136	Case 3BL-1: Equivalence Ratio in PXS SBLOCA with Failed Gravity Recirculation	41A-108
41A-137	Case 3BL-2: Reactor Coolant System Pressure DVI Line Break with Failed Gravity Recirculation	41A-109

LIST OF FIGURES (cont.)

Figure No.	Title	Page
41A-138	Case 3BL-2: Core-Exit Gas Temperature DVI Line Break with Failed Gravity Recirculation	41A-109
41A-139	Case 3BL-2: Reactor Vessel Mixture Level DVI Line Break with Failed Gravity Recirculation	41A-110
41A-140	Case 3BL-2: Hydrogen Generated In-Vessel DVI Line Break with Failed Gravity Recirculation	41A-110
41A-141	Case 3BL-2: Containment Pressure DVI Line Break with Failed Gravity Recirculation	41A-111
41A-142	Case 3BL-2: Containment Gas Temperature DVI Line Break with Failed Gravity Recirculation	41A-111
41A-143	Case 3BL-2: Containment Compartments Water Level DVI Line Break with Failed Gravity Recirculation	41A-112
41A-144	Case 3BL-2: Well-Mixed Compartment Hydrogen Concentration DVI Line Break with Failed Gravity Recirculation	41A-112
41A-145	Case 3BL-2: Well-Mixed Compartment Steam Concentration DVI Line Break with Failed Gravity Recirculation	41A-113
41A-146	Case 3BL-2: Well-Mixed Compartment Oxygen Concentration DVI Line Break with Failed Gravity Recirculation	41A-113
41A-147	Case 3BL-2: Confined Compartment Hydrogen Concentration DVI Line Break with Failed Gravity Recirculation	41A-114
41A-148	Case 3BL-2: Confined Compartment Steam Concentration DVI Line Break with Failed Gravity Recirculation	41A-114
41A-149	Case 3BL-2: Confined Compartment Oxygen Concentration DVI Line Break with Failed Gravity Recirculation	41A-115
41A-150	Case 3BL-2: Equivalence Ratio in SG Room DVI Line Break with Failed Gravity Recirculation	41A-115
41A-151	Case 3BL-2: Equivalence Ratio in CMT Room DVI Line Break with Failed Gravity Recirculation	41A-116
41A-152	Case 3BL-2: Equivalence Ratio in IRWST DVI Line Break with Failed Gravity Recirculation	41A-116
41A-153	Case 3BL-2: Equivalence Ratio in PXS DVI Line Break with Failed Gravity Recirculation	41A-117
41A-154	Case 3BR-1: Reactor Coolant System Pressure CL LBLOCA with Accumulator Failure	41A-117
41A-155	Case 3BR-1: Core-Exit Gas Temperature CL LBLOCA with Accumulator Failure	41A-118
41A-156	Case 3BR-1: Reactor Vessel Mixture Level CL LBLOCA with Accumulator Failure	41A-118
41A-157	Case 3BR-1: Hydrogen Generated In-Vessel CL LBLOCA with Accumulator Failure	41A-119
41A-158	Case 3BR-1: Containment Pressure CL LBLOCA with Accumulator Failure	41A-119

LIST OF FIGURES (cont.)

Figure No.	Title	Page
41A-159	Case 3BR-1: Containment Gas Temperature CL LBLOCA with ccumulator Failure	41A-120
41A-160	Case 3BR-1: Containment Compartments Water Level CL LBLOCA with Accumulator Failure	41A-120
41A-161	Case 3BR-1: Well-Mixed Compartment Hydrogen Concentration CL LBLOCA with Accumulator Failure	41A-121
41A-162	Case 3BR-1: Well-Mixed Compartment Steam Concentration CL LBLOCA with Accumulator Failure	41A-121
41A-163	Case 3BR-1: Well-Mixed Compartment Oxygen Concentration CL LBLOCA with Accumulator Failure	41A-122
41A-164	Case 3BR-1: Confined Compartment Hydrogen Concentration CL LBLOCA with Accumulator Failure	41A-122
41A-165	Case 3BR-1: Confined Compartment Steam Concentration CL LBLOCA with Accumulator Failure	41A-123
41A-166	Case 3BR-1: Confined Compartment Oxygen Concentration CL LBLOCA with Accumulator Failure	41A-123
41A-167	Case 3BR-1: Equivalence Ratio in SG Room CL LBLOCA with Accumulator Failure	41A-124
41A-168	Case 3BR-1: Equivalence Ratio in CMT Room CL LBLOCA with Accumulator Failure	41A-124
41A-169	Case 3BR-1: Equivalence Ratio in IRWST CL LBLOCA with Accumulator Failure	41A-125
41A-170	Case 3BR-1: Equivalence Ratio in PXS CL LBLOCA with Accumulator Failure	41A-125
41A-171	Case 3BR-1a: Reactor Coolant System Pressure CL LBLOCA with Accumulator Failure	41A-126
41A-172	Case 3BR-1a: Core-Exit Gas Temperature CL LBLOCA with Accumulator Failure	41A-126
41A-173	Case 3BR-1a: Reactor Vessel Mixture Level CL LBLOCA with Accumulator Failure	41A-127
41A-174	Case 3BR-1a: Hydrogen Generated In-Vessel CL LBLOCA with Accumulator Failure	41A-127
41A-175	Case 3BR-1a: Containment Pressure CL LBLOCA with Accumulator Failure	41A-128
41A-176	Case 3BR-1a: Containment Gas Temperature CL LBLOCA with Accumulator Failure	41A-128
41A-177	Case 3BR-1a: Containment Compartments Water Level CL LBLOCA with Accumulator Failure	41A-129
41A-178	Case 3BR-1a: Well-Mixed Compartment Hydrogen Concentration CL LBLOCA with Accumulator Failure	41A-129
41A-179	Case 3BR-1a: Well-Mixed Compartment Steam Concentration CL LBLOCA with Accumulator Failure	41A-130

LIST OF FIGURES (cont.)

Figure No.	Title	Page
41A-180	Case 3BR-1a: Well-Mixed Compartment Oxygen Concentration CL LBLOCA with Accumulator Failure	41A-130
41A-181	Case 3BR-1a: Confined Compartment Hydrogen Concentration CL LBLOCA with Accumulator Failure	41A-131
41A-182	Case 3BR-1a: Confined Compartment Steam Concentration CL LBLOCA with Accumulator Failure	41A-131
41A-183	Case 3BR-1a: Confined Compartment Oxygen Concentration CL LBLOCA with Accumulator Failure	41A-132
41A-184	Case 3BR-1a: Equivalence Ratio in SG Room CL LBLOCA with Accumulator Failure	41A-132
41A-185	Case 3BR-1a: Equivalence Ratio in CMT Room CL LBLOCA with Accumulator Failure	41A-133
41A-186	Case 3BR-1a: Equivalence Ratio in IRWST CL LBLOCA with Accumulator Failure	41A-133
41A-187	Case 3BR-1a: Equivalence Ratio in PXS CL LBLOCA with Accumulator Failure	41A-134
41A-188	Case 3C-1: Reactor Coolant System Pressure Vessel Rupture	41A-134
41A-189	Case 3C-1: Core-Exit Gas Temperature Vessel Rupture	41A-135
41A-190	Case 3C-1: Reactor Vessel Mixture Level Vessel Rupture	41A-135
41A-191	Case 3C-1: Hydrogen Generated In-Vessel Vessel Rupture	41A-136
41A-192	Case 3C-1: Containment Pressure Vessel Rupture	41A-136
41A-193	Case 3C-1: Containment Gas Temperature Vessel Rupture	41A-137
41A-194	Case 3C-1: Containment Compartments Water Level Vessel Rupture	41A-137
41A-195	Case 3C-1: Well-Mixed Compartment Hydrogen Concentration Vessel Rupture	41A-138
41A-196	Case 3C-1: Well-Mixed Compartment Steam Concentration Vessel Rupture	41A-138
41A-197	Case 3C-1: Well-Mixed Compartment Oxygen Concentration Vessel Rupture	41A-139
41A-198	Case 3C-1: Confined Compartment Hydrogen Concentration Vessel Rupture	41A-139
41A-199	Case 3C-1: Confined Compartment Steam Concentration Vessel Rupture	41A-140
41A-200	Case 3C-1: Confined Compartment Oxygen Concentration Vessel Rupture	41A-140
41A-201	Case 3C-1: Equivalence Ratio in SG Room Vessel Rupture	41A-141
41A-202	Case 3C-1: Equivalence Ratio in CMT Room Vessel Rupture	41A-141
41A-203	Case 3C-1: Equivalence Ratio in IRWST Vessel Rupture	41A-142
41A-204	Case 3C-1: Equivalence Ratio in PXS Vessel Rupture	41A-142
41A-205	Case 3D-1: Reactor Coolant System Pressure Spurious ADS-4 with Failed CMTs	41A-143
41A-206	Case 3D-1: Core-Exit Gas Temperature Spurious ADS-4 with Failed CMTs	41A-143

LIST OF FIGURES (cont.)

Figure No.	Title	Page
41A-207	Case 3D-1: Reactor Vessel Mixture Level Spurious ADS-4 with Failed CMTs	41A-144
41A-208	Case 3D-1: Hydrogen Generated In-Vessel Spurious ADS-4 with Failed CMTs	41A-144
41A-209	Case 3D-1: Containment Pressure Spurious ADS-4 with Failed CMTs	41A-145
41A-210	Case 3D-1: Containment Gas Temperature Spurious ADS-4 with Failed CMTs	41A-145
41A-211	Case 3D-1: Containment Compartments Water Level Spurious ADS-4 with Failed CMTs	41A-146
41A-212	Case 3D-1: Well-Mixed Compartment Hydrogen Concentration Spurious ADS-4 with Failed CMTs	41A-146
41A-213	Case 3D-1: Well-Mixed Compartment Steam Concentration Spurious ADS-4 with Failed CMTs	41A-147
41A-214	Case 3D-1: Well-Mixed Compartment Oxygen Concentration Spurious ADS-4 with Failed CMTs	41A-147
41A-215	Case 3D-1: Confined Compartment Hydrogen Concentration Spurious ADS-4 with Failed CMTs	41A-148
41A-216	Case 3D-1: Confined Compartment Steam Concentration Spurious ADS-4 with Failed CMTs	41A-148
41A-217	Case 3D-1: Confined Compartment Oxygen Concentration Spurious ADS-4 with Failed CMTs	41A-149
41A-218	Case 3D-1: Equivalence Ratio in SG Room Spurious ADS-4 with Failed CMTs	41A-149
41A-219	Case 3D-1: Equivalence Ratio in CMT Room Spurious ADS-4 with Failed CMTs	41A-150
41A-220	Case 3D-1: Equivalence Ratio in IRWST Spurious ADS-4 with Failed CMTs	41A-150
41A-221	Case 3D-1: Equivalence Ratio in PXS Spurious ADS-4 with Failed CMTs	41A-151
41A-222	Case 3D-2: Reactor Coolant System Pressure Spurious ADS-2, Failed CMTs	41A-151
41A-223	Case 3D-2: Core-Exit Gas Temperature Spurious ADS-2, Failed CMTs	41A-152
41A-224	Case 3D-2: Reactor Vessel Mixture Level Spurious ADS-2, Failed CMTs	41A-152
41A-225	Case 3D-2: Hydrogen Generated In-Vessel Spurious ADS-2, Failed CMTs	41A-153
41A-226	Case 3D-2: Containment Pressure Spurious ADS-2, Failed CMTs	41A-153
41A-227	Case 3D-2: Containment Gas Temperature Spurious ADS-2, Failed CMTs	41A-154
41A-228	Case 3D-2: Containment Compartments Water Level Spurious ADS-2, Failed CMTs	41A-154

LIST OF FIGURES (cont.)

Figure No.	Title	Page
41A-229	Case 3D-2: Well-Mixed Compartment Hydrogen Concentration Spurious ADS-2, Failed CMTs	41A-155
41A-230	Case 3D-2: Well-Mixed Compartment Steam Concentration Spurious ADS-2, Failed CMTs	41A-155
41A-231	Case 3D-2: Well-Mixed Compartment Oxygen Concentration Spurious ADS-2, Failed CMTs	41A-156
41A-232	Case 3D-2: Confined Compartment Hydrogen Concentration Spurious ADS-2, Failed CMTs	41A-156
41A-233	Case 3D-2: Confined Compartment Steam Concentration Spurious ADS-2, Failed CMTs	41A-157
41A-234	Case 3D-2: Confined Compartment Oxygen Concentration Spurious ADS-2, Failed CMTs	41A-157
41A-235	Case 3D-2: Equivalence Ratio in SG Room Spurious ADS-2, Failed CMTs	41A-158
41A-236	Case 3D-2: Equivalence Ratio in CMT Room Spurious ADS-2, Failed CMTs	41A-158
41A-237	Case 3D-2: Equivalence Ratio in IRWST Spurious ADS-2, Failed CMTs	41A-159
41A-238	Case 3D-2: Equivalence Ratio in PXS Spurious ADS-2, Failed CMTs	41A-159
41A-239	Case 3D-3: Reactor Coolant System Pressure DVI Line Break with no ADS	41A-160
41A-240	Case 3D-3: Core-Exit Gas Temperature DVI Line Break with no ADS	41A-160
41A-241	Case 3D-3: Reactor Vessel Mixture Level DVI Line Break with no ADS	41A-161
41A-242	Case 3D-3: Hydrogen Generated In-Vessel DVI Line Break with no ADS	41A-161
41A-243	Case 3D-3: Containment Pressure DVI Line Break with no ADS	41A-162
41A-244	Case 3D-3: Containment Gas Temperature DVI Line Break with no ADS	41A-162
41A-245	Case 3D-3: Containment Compartments Water Level DVI Line Break with no ADS	41A-163
41A-246	Case 3D-3: Well-Mixed Compartment Hydrogen Concentration DVI Line Break with no ADS	41A-163
41A-247	Case 3D-3: Well-Mixed Compartment Steam Concentration DVI Line Break with no ADS	41A-164
41A-248	Case 3D-3: Well-Mixed Compartment Oxygen Concentration DVI Line Break with no ADS	41A-164
41A-249	Case 3D-3: Confined Compartment Hydrogen Concentration DVI Line Break with no ADS	41A-165
41A-250	Case 3D-3: Confined Compartment Steam Concentration DVI Line Break with no ADS	41A-165
41A-251	Case 3D-3: Confined Compartment Oxygen Concentration DVI Line Break with no ADS	41A-166

LIST OF FIGURES (cont.)

Figure No.	Title	Page
41A-252	Case 3D-3: Equivalence Ratio in SG Room DVI Line Break with no ADS	41A-166
41A-253	Case 3D-3: Equivalence Ratio in CMT Room DVI Line Break with no ADS	41A-167
41A-254	Case 3D-3: Equivalence Ratio in IRWST DVI Line Break with no ADS	41A-167
41A-255	Case 3D-3: Equivalence Ratio in PXS DVI Line Break with no ADS	41A-168
41A-256	Case 3D-5: Reactor Coolant System Pressure Spurious ADS-2, Failed CMTs, Diffusion Flame	41A-168
41A-257	Case 3D-5: Core-Exit Gas Temperature Spurious ADS-2, Failed CMTs, Diffusion Flame	41A-169
41A-258	Case 3D-5: Reactor Vessel Mixture Level Spurious ADS-2, Failed CMTs, Diffusion Flame	41A-169
41A-259	Case 3D-5: Hydrogen Generated In-Vessel Spurious ADS-2, Failed CMTs, Diffusion Flame	41A-170
41A-260	Case 3D-5: Containment Pressure Spurious ADS-2, Failed CMTs, Diffusion Flame	41A-170
41A-261	Case 3D-5: Containment Gas Temperature Spurious ADS-2, Failed CMTs, Diffusion Flame	41A-171
41A-262	Case 3D-5: Containment Compartments Water Level Spurious ADS-2, Failed CMTs, Diffusion Flame	41A-171
41A-263	Case 3D-5: Well-Mixed Compartment Hydrogen Concentration Spurious ADS-2, Failed CMTs, Diffusion Flame	41A-172
41A-264	Case 3D-5: Well-Mixed Compartment Steam Concentration Spurious ADS-2, Failed CMTs, Diffusion Flame	41A-172
41A-265	Case 3D-5: Well-Mixed Compartment Oxygen Concentration Spurious ADS-2, Failed CMTs, Diffusion Flame	41A-173
41A-266	Case 3D-5: Confined Compartment Hydrogen Concentration Spurious ADS-2, Failed CMTs, Diffusion Flame	41A-173
41A-267	Case 3D-5: Confined Compartment Steam Concentration Spurious ADS-2, Failed CMTs, Diffusion Flame	41A-174
41A-268	Case 3D-5: Confined Compartment Oxygen Concentration Spurious ADS-2, Failed CMTs, Diffusion Flame	41A-174
41A-269	Case 3D-5: Equivalence Ratio in SG Room Spurious ADS-2, Failed CMTs, Diffusion Flame	41A-175
41A-270	Case 3D-5: Equivalence Ratio in CMT Room Spurious ADS-2, Failed CMTs, Diffusion Flame	41A-175
41A-271	Case 3D-5: Equivalence Ratio in IRWST Spurious ADS-2, Failed CMTs, Diffusion Flame	41A-176
41A-272	Case 3D-5: Equivalence Ratio in PXS Spurious ADS-2, Failed CMTs, Diffusion Flame	41A-176
41A-273	Case 1A-3: Reactor Coolant System Pressure FW Failure with Creep of SG Tubes	41A-177

LIST OF FIGURES (cont.)

Figure No.	Title	Page
41A-274	Case 1A-3: Core-Exit Gas Temperature FW Failure with Creep of SG Tubes	41A-177
41A-275	Case 1A-3: Reactor Vessel Mixture Level FW Failure with Creep of SG Tubes	41A-178
41A-276	Case 1A-3: Hydrogen Generated In-Vessel FW Failure with Creep of SG Tubes	41A-178
41A-277	Case 1A-3: Containment Pressure FW Failure with Creep of SG Tubes	41A-179
41A-278	Case 1A-3: Containment Gas Temperature FW Failure with Creep of SG Tubes	41A-179
41A-279	Case 1A-3: Containment Compartments Water Level FW Failure with Creep of SG Tubes	41A-180
41A-280	Case 1A-3: Well-Mixed Compartment Hydrogen Concentration FW Failure with Creep of SG Tubes	41A-180
41A-281	Case 1A-3: Well-Mixed Compartment Steam Concentration FW Failure with Creep of SG Tubes	41A-181
41A-282	Case 1A-3: Well-Mixed Compartment Oxygen Concentration FW Failure with Creep of SG Tubes	41A-181
41A-283	Case 1A-3: Confined Compartment Hydrogen Concentration FW Failure with Creep of SG Tubes	41A-182
41A-284	Case 1A-3: Confined Compartment Steam Concentration FW Failure with Creep of SG Tubes	41A-182
41A-285	Case 1A-3: Confined Compartment Oxygen Concentration FW Failure with Creep of SG Tubes	41A-183
41A-286	Case 1A-3: Equivalence Ratio in SG Room FW Failure with Creep of SG Tubes	41A-183
41A-287	Case 1A-3: Equivalence Ratio in CMT Room FW Failure with Creep of SG Tubes	41A-184
41A-288	Case 1A-3: Equivalence Ratio in IRWST FW Failure with Creep of SG Tubes	41A-184
41A-289	Case 1A-3: Equivalence Ratio in PXS FW Failure with Creep of SG Tubes	41A-185
41A-290	Case 1A-3a: Reactor Coolant System Pressure Transient with Creep of SG Tubes	41A-185
41A-291	Case 1A-3a: Core-Exit Gas Temperature Transient with Creep of SG Tubes	41A-186
41A-292	Case 1A-3a: Reactor Vessel Mixture Level Transient with Creep of SG Tubes	41A-186
41A-293	Case 1A-3a: Hydrogen Generated In-Vessel Transient with Creep of SG Tubes	41A-187
41A-294	Case 1A-3a: Containment Pressure Transient with Creep of SG Tubes	41A-187
41A-295	Case 1A-3a: Containment Gas Temperature Transient with Creep of SG Tubes	41A-188
41A-296	Case 1A-3a: Containment Compartments Water Level Transient with Creep of SG Tubes	41A-188

LIST OF FIGURES (cont.)

Figure No.	Title	Page
41A-297	Case 1A-3a: Well-Mixed Compartment Hydrogen Concentration Transient with Creep of SG Tubes	41A-189
41A-298	Case 1A-3a: Well-Mixed Compartment Steam Concentration Transient with Creep of SG Tubes	41A-189
41A-299	Case 1A-3a: Well-Mixed Compartment Oxygen Concentration Transient with Creep of SG Tubes	41A-190
41A-300	Case 1A-3a: Confined Compartment Hydrogen Concentration Transient with Creep of SG Tubes	41A-190
41A-301	Case 1A-3a: Confined Compartment Steam Concentration Transient with Creep of SG Tubes	41A-191
41A-302	Case 1A-3a: Confined Compartment Oxygen Concentration Transient with Creep of SG Tubes	41A-191
41A-303	Case 1A-3a: Approximate Detonation Cell Width in SG Room Transient with Creep of SG Tubes	41A-192
41A-304	Case 1A-3a: Approximate Detonation Cell Width in CMT Room Transient with Creep of SG Tubes	41A-192
41A-305	Case 1A-3a: Equivalence Ratio in IRWST Transient with Creep of SG Tubes	41A-193
41A-306	Case 1A-3a: Approximate Detonation Cell Width in PXS Transient with Creep of SG Tubes	41A-193
41A-307	Case 1A-4: Reactor Coolant System Pressure FW Failure with Creep of SG Tubes	41A-194
41A-308	Case 1A-4: Core-Exit Gas Temperature FW Failure with Creep of SG Tubes	41A-194
41A-309	Case 1A-4: Reactor Vessel Mixture Level FW Failure with Creep of SG Tubes	41A-195
41A-310	Case 1A-4: Hydrogen Generated In-Vessel FW Failure with Creep of SG Tubes	41A-195
41A-311	Case 1A-4: Containment Pressure FW Failure with Creep of SG Tubes	41A-196
41A-312	Case 1A-4: Containment Gas Temperature FW Failure with Creep of SG Tubes	41A-196
41A-313	Case 1A-4: Containment Compartments Water Level FW Failure with Creep of SG Tubes	41A-197
41A-314	Case 1A-4: Well-Mixed Compartment Hydrogen Concentration FW Failure with Creep of SG Tubes	41A-197
41A-315	Case 1A-4: Well-Mixed Compartment Steam Concentration FW Failure with Creep of SG Tubes	41A-198
41A-316	Case 1A-4: Well-Mixed Compartment Oxygen Concentration FW Failure with Creep of SG Tubes	41A-198
41A-317	Case 1A-4: Confined Compartment Hydrogen Concentration FW Failure with Creep of SG Tubes	41A-199
41A-318	Case 1A-4: Confined Compartment Steam Concentration FW Failure with Creep of SG Tubes	41A-199

LIST OF FIGURES (cont.)

Figure No.	Title	Page
41A-319	Case 1A-4: Confined Compartment Oxygen Concentration FW Failure with Creep of SG Tubes	41A-200
41A-320	Case 1A-4: Equivalence Ratio in SG Room FW Failure with Creep of SG Tubes	41A-200
41A-321	Case 1A-4: Equivalence Ratio in CMT Room FW Failure with Creep of SG Tubes	41A-201
41A-322	Case 1A-4: Equivalence Ratio in IRWST FW Failure with Creep of SG Tubes	41A-201
41A-323	Case 1A-4: Equivalence Ratio in PXS FW Failure with Creep of SG Tubes	41A-202
41A-324	Case 1A-4a: Reactor Coolant System Pressure Transient with Creep of SG Tubes	41A-202
41A-325	Case 1A-4a: Core-Exit Gas Temperature Transient with Creep of SG Tubes	41A-203
41A-326	Case 1A-4a: Reactor Vessel Mixture Level Transient with Creep of SG Tubes	41A-203
41A-327	Case 1A-4a: Hydrogen Generated In-Vessel Transient with Creep of SG Tubes	41A-204
41A-328	Case 1A-4a: Containment Pressure Transient with Creep of SG Tubes	41A-204
41A-329	Case 1A-4a: Containment Gas Temperature Transient with Creep of SG Tubes	41A-205
41A-330	Case 1A-4a: Containment Compartments Water Level Transient with Creep of SG Tubes	41A-205
41A-331	Case 1A-4a: Well-Mixed Compartment Hydrogen Concentration Transient with Creep of SG Tubes	41A-206
41A-332	Case 1A-4a: Well-Mixed Compartment Steam Concentration Transient with Creep of SG Tubes	41A-206
41A-333	Case 1A-4a: Well-Mixed Compartment Oxygen Concentration Transient with Creep of SG Tubes	41A-207
41A-334	Case 1A-4a: Confined Compartment Hydrogen Concentration Transient with Creep of SG Tubes	41A-207
41A-335	Case 1A-4a: Confined Compartment Steam Concentration Transient with Creep of SG Tubes	41A-208
41A-336	Case 1A-4a: Confined Compartment Oxygen Concentration Transient with Creep of SG Tubes	41A-208
41A-337	Case 1A-4a: Approximate Detonation Cell Width in SG Room Transient with Creep of SG Tubes	41A-209
41A-338	Case 1A-4a: Equivalence Ratio in CMT Room Transient with Creep of SG Tubes	41A-209
41A-339	Case 1A-4a: Equivalence Ratio in IRWST Transient with Creep of SG Tubes	41A-210
41A-340	Case 1A-4a: Equivalence Ratio in PXS Transient with Creep of SG Tubes	41A-210
41A-341	Case 1AP-3: Reactor Coolant System Pressure SBLOCA, Failed PRHR and CMTs	41A-211

LIST OF FIGURES (cont.)

Figure No.	Title	Page
41A-342	Case 1AP-3: Core-Exit Gas Temperature SBLOCA, Failed PRHR and CMTs	41A-211
41A-343	Case 1AP-3: Reactor Vessel Mixture Level SBLOCA, Failed PRHR and CMTs	41A-212
41A-344	Case 1AP-3: Hydrogen Generated In-Vessel SBLOCA, Failed PRHR and CMTs	41A-212
41A-345	Case 1AP-3: Containment Pressure SBLOCA, Failed PRHR and CMTs	41A-213
41A-346	Case 1AP-3: Containment Gas Temperature SBLOCA, Failed PRHR and CMTs	41A-213
41A-347	Case 1AP-3: Containment Compartments Water Level SBLOCA, Failed PRHR and CMTs	41A-214
41A-348	Case 1AP-3: Well-Mixed Compartment Hydrogen Concentration SBLOCA, Failed PRHR and CMTs	41A-214
41A-349	Case 1AP-3: Well-Mixed Compartment Steam Concentration SBLOCA, Failed PRHR and CMTs	41A-215
41A-350	Case 1AP-3: Well-Mixed Compartment Oxygen Concentration SBLOCA, Failed PRHR and CMTs	41A-215
41A-351	Case 1AP-3: Confined Compartment Hydrogen Concentration SBLOCA, Failed PRHR and CMTs	41A-216
41A-352	Case 1AP-3: Confined Compartment Steam Concentration SBLOCA, Failed PRHR and CMTs	41A-216
41A-353	Case 1AP-3: Confined Compartment Oxygen Concentration SBLOCA, Failed PRHR and CMTs	41A-217
41A-354	Case 1AP-3: Equivalence Ratio in SG Room SBLOCA, Failed PRHR and CMTs	41A-217
41A-355	Case 1AP-3: Equivalence Ratio in CMT Room SBLOCA, Failed PRHR and CMTs	41A-218
41A-356	Case 1AP-3: Equivalence Ratio in IRWST SBLOCA, Failed PRHR and CMTs	41A-218
41A-357	Case 1AP-3: Equivalence Ratio in PXS SBLOCA, Failed PRHR and CMTs	41A-219
41A-358	Case 1AP-4: Reactor Coolant System Pressure SBLOCA with Failed PRHR and ADS	41A-219
41A-359	Case 1AP-4: Core-Exit Gas Temperature SBLOCA with Failed PRHR and ADS	41A-220
41A-360	Case 1AP-4: Reactor Vessel Mixture Level SBLOCA with Failed PRHR and ADS	41A-220
41A-361	Case 1AP-4: Hydrogen Generated In-Vessel SBLOCA with Failed PRHR and ADS	41A-221
41A-362	Case 1AP-4: Containment Pressure SBLOCA with Failed PRHR and ADS	41A-221
41A-363	Case 1AP-4: Containment Gas Temperature SBLOCA with Failed PRHR and ADS	41A-222

LIST OF FIGURES (cont.)

Figure No.	Title	Page
41A-364	Case 1AP-4: Containment Compartments Water Level SBLOCA with Failed PRHR and ADS	41A-222
41A-365	Case 1AP-4: Well-Mixed Compartment Hydrogen Concentration SBLOCA with Failed PRHR and ADS	41A-223
41A-366	Case 1AP-4: Well-Mixed Compartment Steam Concentration SBLOCA with Failed PRHR and ADS	41A-223
41A-367	Case 1AP-4: Well-Mixed Compartment Oxygen Concentration SBLOCA with Failed PRHR and ADS	41A-224
41A-368	Case 1AP-4: Confined Compartment Hydrogen Concentration SBLOCA with Failed PRHR and ADS	41A-224
41A-369	Case 1AP-4: Confined Compartment Steam Concentration SBLOCA with Failed PRHR and ADS	41A-225
41A-370	Case 1AP-4: Confined Compartment Oxygen Concentration SBLOCA with Failed PRHR and ADS	41A-225
41A-371	Case 1AP-4: Equivalence Ratio in SG Room SBLOCA with Failed PRHR and ADS	41A-226
41A-372	Case 1AP-4: Equivalence Ratio in CMT Room SBLOCA with Failed PRHR and ADS	41A-226
41A-373	Case 1AP-4: Equivalence Ratio in IRWST SBLOCA with Failed PRHR and ADS	41A-227
41A-374	Case 1AP-4: Equivalence Ratio in PXS SBLOCA with Failed PRHR and ADS	41A-227
41B-1	Case 3BR – LLOCA with Accumulator Failure Reactor Coolant System Pressure	41B-3
41B-2	Case 3BR – LLOCA with Accumulator Failure Reactor Vessel Mixture Level	41B-3
41B-3	Case 3BR – LLOCA with Accumulator Failure Core-Exit Gas Temperature	41B-4
41B-4	Case 3BR – LLOCA with Accumulator Failure Hydrogen Generated In-Vessel	41B-4
41B-5	Case 3BR – LLOCA with Accumulator Failure Containment Pressure	41B-5
41B-6	Case 3BR – LLOCA with Accumulator Failure Containment Gas Temperature	41B-5
41B-7	Case 3BR – LLOCA with Accumulator Failure Containment Compartment Hydrogen Concentration	41B-6
41B-8	Case 3BR – LLOCA with Accumulator Failure Hydrogen Flow Rate Through Break	41B-6
41B-9	Case 3BR – LLOCA with Accumulator Failure Well-Mixed Compartment Hydrogen Concentration	41B-7
41B-10	Case 3BR – LLOCA with Accumulator Failure Well-Mixed Compartment Oxygen Concentration	41B-7
41B-11	Case 3BR – LLOCA with Accumulator Failure Well-Mixed Compartment Steam Concentration	41B-8

LIST OF FIGURES (cont.)

Figure No.	Title	Page
41B-12	Case 3BR – LLOCA with Accumulator Failure Approximate Detonation Cell Width in Steam Generator Compartment	41B-8
41B-13	Case 3BR – LLOCA with Accumulator Failure Containment Compartments Water Level	41B-9
41B-14	Case 3BR – LLOCA with Accumulator Failure Hydrogen Flow Rate Through ADS to IRWST	41B-9
41B-15	Case 3BR – LLOCA with Accumulator Failure Confined Compartment Hydrogen Concentration	41B-10
41B-16	Case 3BR – LLOCA with Accumulator Failure Confined Compartment Oxygen Concentration	41B-10
41B-17	Case 3BR – LLOCA with Accumulator Failure Confined Compartment Steam Concentration	41B-11
42-1	AP1000 Containment Fragility at Containment Temperature of 400°F	42-11
42-2	AP1000 Containment Fragility at Containment Temperature of 331°F	42-12
43-1	Plant Damage State Contributions to CDF	43-94
43-2	Containment Event Tree – CET (Sheets 1 – 3)	43-95
43-3	3BE CET (Sheets 1 – 3)	43-98
43-4	3BL CET (Sheets 1 – 3)	43-101
43-5	3BR CET (Sheets 1 – 3)	43-104
43-6	1A CET (Sheets 1 – 3)	43-107
43-7	1AP CET (Sheets 1 – 3)	43-110
43-8	3A CET (Sheets 1 – 3)	43-113
43-9	3C CET (Sheets 1 – 3)	43-116
43-10	3D CET (Sheets 1 – 3)	43-119
43-11	6 CET (Sheets 1 – 3)	43-122
43-12	Contribution of PDS to LRF	43-125
43-13	Summary of CET Quantification (Sheets 1 – 2)	43-126
44-1	MAAP4 AP1000 Containment Nodalization	44-12
45-1	Release Category IC, Case 3BE-5 – SBLOCA with Failed Gravity Injection: Release Fraction of Noble Gases	45-7
45-2	Release Category IC, Case 3BE-5 – SBLOCA with Failed Gravity Injection: Release Fraction of Cesium Iodide	45-7
45-3	Release Category IC, Case 3BE-5 – SBLOCA with Failed Gravity Injection: Release Fraction of Tellurium Dioxide	45-8
45-4	Release Category IC, Case 3BE-5 – SBLOCA with Failed Gravity Injection: Release Fraction of Strontium Oxide	45-8
45-5	Release Category IC, Case 3BE-5 – SBLOCA with Failed Gravity Injection: Release Fraction of Molybdenum Dioxide	45-9

LIST OF FIGURES (cont.)

Figure No.	Title	Page
45-6	Release Category IC, Case 3BE-5 – SBLOCA with Failed Gravity Injection: Release Fraction of Cesium Hydroxide	45-9
45-7	Release Category IC, Case 3BE-5 – SBLOCA with Failed Gravity Injection: Release Fraction of Barium Oxide	45-10
45-8	Release Category IC, Case 3BE-5 – SBLOCA with Failed Gravity Injection: Release Fraction of Dilanthanum Trioxide	45-10
45-9	Release Category IC, Case 3BE-5 – SBLOCA with Failed Gravity Injection: Release Fraction of Cerium Dioxide	45-11
45-10	Release Category IC, Case 3BE-5 – SBLOCA with Failed Gravity Injection: Release Fraction of Tin	45-11
45-11	Release Category IC, Case 3BE-5 – SBLOCA with Failed Gravity Injection: Release Fraction of Tellurium	45-12
45-12	Release Category IC, Case 3BE-5 – SBLOCA with Failed Gravity Injection: Release Fraction of Uranium Dioxide	45-12
45-13	Release Category BP, Case 1A-2 – FW Failure with Creep of SG Tubes: Release Fraction of Noble Gases	45-13
45-14	Release Category BP, Case 1A-2 – FW Failure with Creep of SG Tubes: Release Fraction of Cesium Iodide	45-13
45-15	Release Category BP, Case 1A-2 – FW Failure with Creep of SG Tubes: Release Fraction of Tellurium Dioxide	45-14
45-16	Release Category BP, Case 1A-2 – FW Failure with Creep of SG Tubes: Release Fraction of Strontium Oxide	45-14
45-17	Release Category BP, Case 1A-2 – FW Failure with Creep of SG Tubes: Release Fraction of Molybdenum Dioxide	45-15
45-18	Release Category BP, Case 1A-2 – FW Failure with Creep of SG Tubes: Release Fraction of Cesium Hydroxide	45-15
45-19	Release Category BP, Case 1A-2 – FW Failure with Creep of SG Tubes: Release Fraction of Barium Oxide	45-16
45-20	Release Category BP, Case 1A-2 – FW Failure with Creep of SG Tubes: Release Fraction of Dilanthanum Trioxide	45-16
45-21	Release Category BP, Case 1A-2 – FW Failure with Creep of SG Tubes: Release Fraction of Cerium Dioxide	45-17
45-22	Release Category BP, Case 1A-2 – FW Failure with Creep of SG Tubes: Release Fraction of Tin	45-17
45-23	Release Category BP, Case 1A-2 – FW Failure with Creep of SG Tubes: Release Fraction of Tellurium	45-18
45-24	Release Category BP, Case 1A-2 – FW Failure with Creep of SG Tubes: Release Fraction of Uranium Dioxide	45-18
45-25	Release Category CI, Case 3C-2 – Vessel Rupture with Containment Failure: Release Fraction of Noble Gases	45-19
45-26	Release Category CI, Case 3C-2 – Vessel Rupture with Containment Failure: Release Fraction of Cesium Iodide	45-19

LIST OF FIGURES (cont.)

Figure No.	Title	Page
45-27	Release Category CI, Case 3C-2 – Vessel Rupture with Containment Failure: Release Fraction of Tellurium Dioxide	45-20
45-28	Release Category CI, Case 3C-2 – Vessel Rupture with Containment Failure: Release Fraction of Strontium Oxide	45-20
45-29	Release Category CI, Case 3C-2 – Vessel Rupture with Containment Failure: Release Fraction of Molybdenum Dioxide	45-21
45-30	Release Category CI, Case 3C-2 – Vessel Rupture with Containment Failure: Release Fraction of Cesium Hydroxide	45-21
45-31	Release Category CI, Case 3C-2 – Vessel Rupture with Containment Failure: Release Fraction of Barium Oxide	45-22
45-32	Release Category CI, Case 3C-2 – Vessel Rupture with Containment Failure: Release Fraction of Dilanthanum Trioxide	45-22
45-33	Release Category CI, Case 3C-2 – Vessel Rupture with Containment Failure: Release Fraction of Cerium Dioxide	45-23
45-34	Release Category CI, Case 3C-2 – Vessel Rupture with Containment Failure: Release Fraction of Tin	45-23
45-35	Release Category CI, Case 3C-2 – Vessel Rupture with Containment Failure: Release Fraction of Tellurium	45-24
45-36	Release Category CI, Case 3C-2 – Vessel Rupture with Containment Failure: Release Fraction of Uranium Dioxide	45-24
45-37	Release Category CFE, Case 3D-4 – Spurious ADS-2, Failed CMTs, Diffusion Flame: Release Fraction of Noble Gases	45-25
45-38	Release Category CFE, Case 3D-4 – Spurious ADS-2, Failed CMTs, Diffusion Flame: Release Fraction of Cesium Iodide	45-25
45-39	Release Category CFE, Case 3D-4 – Spurious ADS-2, Failed CMTs, Diffusion Flame: Release Fraction of Tellurium Dioxide	45-26
45-40	Release Category CFE, Case 3D-4 – Spurious ADS-2, Failed CMTs, Diffusion Flame: Release Fraction of Strontium Oxide	45-26
45-41	Release Category CFE, Case 3D-4 – Spurious ADS-2, Failed CMTs, Diffusion Flame: Release Fraction of Molybdenum Dioxide	45-27
45-42	Release Category CFE, Case 3D-4 – Spurious ADS-2, Failed CMTs, Diffusion Flame: Release Fraction of Cesium Hydroxide	45-27
45-43	Release Category CFE, Case 3D-4 – Spurious ADS-2, Failed CMTs, Diffusion Flame: Release Fraction of Barium Oxide	45-28
45-44	Release Category CFE, Case 3D-4 – Spurious ADS-2, Failed CMTs, Diffusion Flame: Release Fraction of Dilanthanum Trioxide	45-28
45-45	Release Category CFE, Case 3D-4 – Spurious ADS-2, Failed CMTs, Diffusion Flame: Release Fraction of Cerium Dioxide	45-29
45-46	Release Category CFE, Case 3D-4 – Spurious ADS-2, Failed CMTs, Diffusion Flame: Release Fraction of Tin	45-29
45-47	Release Category CFE, Case 3D-4 – Spurious ADS-2, Failed CMTs, Diffusion Flame: Release Fraction of Tellurium	45-30

LIST OF FIGURES (cont.)

Figure No.	Title	Page
45-48	Release Category CFE, Case 3D-4 – Spurious ADS-2, Failed CMTs, Diffusion Flame: Release Fraction of Uranium Dioxide	45-30
45-49	Release Category CFI, Case 3BE-3 – DVI Line Break, Failed Gravity Injection, No PXS Flooding: Release Fraction of Noble Gases	45-31
45-50	Release Category CFI, Case 3BE-3 – DVI Line Break, Failed Gravity Injection, No PXS Flooding: Release Fraction of Cesium Iodide	45-31
45-51	Release Category CFI, Case 3BE-3 – DVI Line Break, Failed Gravity Injection, No PXS Flooding: Release Fraction of Tellurium Dioxide	45-32
45-52	Release Category CFI, Case 3BE-3 – DVI Line Break, Failed Gravity Injection, No PXS Flooding: Release Fraction of Strontium Oxide	45-32
45-53	Release Category CFI, Case 3BE-3 – DVI Line Break, Failed Gravity Injection, No PXS Flooding: Release Fraction of Molybdenum Dioxide	45-33
45-54	Release Category CFI, Case 3BE-3 – DVI Line Break, Failed Gravity Injection, No PXS Flooding: Release Fraction of Cesium Hydroxide	45-33
45-55	Release Category CFI, Case 3BE-3 – DVI Line Break, Failed Gravity Injection, No PXS Flooding: Release Fraction of Barium Oxide	45-34
45-56	Release Category CFI, Case 3BE-3 – DVI Line Break, Failed Gravity Injection, No PXS Flooding: Release Fraction of Dilanthanum Trioxide	45-34
45-57	Release Category CFI, Case 3BE-3 – DVI Line Break, Failed Gravity Injection, No PXS Flooding: Release Fraction of Cerium Dioxide	45-35
45-58	Release Category CFI, Case 3BE-3 – DVI Line Break, Failed Gravity Injection, No PXS Flooding: Release Fraction of Tin	45-35
45-59	Release Category CFI, Case 3BE-3 – DVI Line Break, Failed Gravity Injection, No PXS Flooding: Release Fraction of Tellurium	45-36
45-60	Release Category CFI, Case 3BE-3 – DVI Line Break, Failed Gravity Injection, No PXS Flooding: Release Fraction of Uranium Dioxide	45-36
45-61	Release Category CFL, Case 3BE-7 – SBLOCA with Failed Gravity Injection: Release Fraction of Noble Gases	45-37
45-62	Release Category CFL, Case 3BE-7 – SBLOCA with Failed Gravity Injection: Release Fraction of Cesium Iodide	45-37
45-63	Release Category CFL, Case 3BE-7 – SBLOCA with Failed Gravity Injection: Release Fraction of Tellurium Dioxide	45-38
45-64	Release Category CFL, Case 3BE-7 – SBLOCA with Failed Gravity Injection: Release Fraction of Strontium Oxide	45-38
45-65	Release Category CFL, Case 3BE-7 – SBLOCA with Failed Gravity Injection: Release Fraction of Molybdenum Dioxide	45-39
45-66	Release Category CFL, Case 3BE-7 – SBLOCA with Failed Gravity Injection: Release Fraction of Cesium Hydroxide	45-39
45-67	Release Category CFL, Case 3BE-7 – SBLOCA with Failed Gravity Injection: Release Fraction of Barium Oxide	45-40
45-68	Release Category CFL, Case 3BE-7 – SBLOCA with Failed Gravity Injection: Release Fraction of Dilanthanum Trioxide	45-40

LIST OF FIGURES (cont.)

Figure No.	Title	Page
45-69	Release Category CFL, Case 3BE-7 – SBLOCA with Failed Gravity Injection: Release Fraction of Cerium Dioxide	45-41
45-70	Release Category CFL, Case 3BE-7 – SBLOCA with Failed Gravity Injection: Release Fraction of Tin	45-41
45-71	Release Category CFL, Case 3BE-7 – SBLOCA with Failed Gravity Injection: Release Fraction of Tellurium	45-42
45-72	Release Category CFL, Case 3BE-7 – SBLOCA with Failed Gravity Injection: Release Fraction of Uranium Dioxide	45-42
45-73	Release Category IC, Case 3BE-5 – SBLOCA with Failed Gravity Injection Direct-Release Sensitivity: Release Fraction of Noble Gases	45-43
45-74	Release Category IC, Case 3BE-5 – SBLOCA with Failed Gravity Injection Direct-Release Sensitivity: Release Fraction of Cesium Iodide	45-43
45-75	Release Category IC, Case 3BE-5 – SBLOCA with Failed Gravity Injection Direct-Release Sensitivity: Release Fraction of Tellurium Dioxide	45-44
45-76	Release Category IC, Case 3BE-5 – SBLOCA with Failed Gravity Injection Direct-Release Sensitivity: Release Fraction of Strontium Oxide	45-44
45-77	Release Category IC, Case 3BE-5 – SBLOCA with Failed Gravity Injection Direct-Release Sensitivity: Release Fraction of Molybdenum Dioxide	45-45
45-78	Release Category IC, Case 3BE-5 – SBLOCA with Failed Gravity Injection Direct-Release Sensitivity: Release Fraction of Cesium Hydroxide	45-45
45-79	Release Category IC, Case 3BE-5 – SBLOCA with Failed Gravity Injection Direct-Release Sensitivity: Release Fraction of Barium Oxide	45-46
45-80	Release Category IC, Case 3BE-5 – SBLOCA with Failed Gravity Injection Direct-Release Sensitivity: Release Fraction of Dilanthanum Trioxide	45-46
45-81	Release Category IC, Case 3BE-5 – SBLOCA with Failed Gravity Injection Direct-Release Sensitivity: Release Fraction of Cerium Dioxide	45-47
45-82	Release Category IC, Case 3BE-5 – SBLOCA with Failed Gravity Injection Direct-Release Sensitivity: Release Fraction of Tin	45-47
45-83	Release Category IC, Case 3BE-5 – SBLOCA with Failed Gravity Injection Direct-Release Sensitivity: Release Fraction of Tellurium	45-48
45-84	Release Category IC, Case 3BE-5 – SBLOCA with Failed Gravity Injection Direct-Release Sensitivity: Release Fraction of Uranium Dioxide	45-48
49-1	Population Whole Body Dose – BP Source Term, 24 Hours	49-20
49-2	Population Whole Body Dose – BP Source Term 72 Hours	49-20
49-3	Site Boundary Whole Body Dose – BP Source Term, 24 Hours	49-21
49-4	Site Boundary Whole Body Dose – BP Source Term, 72 Hours	49-21
49-5	Site Boundary Red Bone Marrow Dose – BP Source Term, 24 Hours	49-22
49-6	Site Boundary Red Bone Marrow Dose – BP Source Term, 72 Hours	49-22
49-7	Site Boundary Thyroid Dose – BP Source Term, 24 Hours	49-23
49-8	Site Boundary Thyroid Dose – BP Source Term, 72 Hours	49-23
49-9	Population Whole Body Dose – CFE Source Term, 24 Hours	49-24
49-10	Population Whole Body Dose – CFE Source Term, 72 Hours	49-24

LIST OF FIGURES (cont.)

Figure No.	Title	Page
49-11	Site Boundary Whole Body Dose – CFE Source Term, 24 Hours	49-25
49-12	Site Boundary Whole Body Dose – CFE Source Term, 72 Hours	49-25
49-13	Site Boundary Red Bone Marrow Dose – CFE Source Term, 24 Hours	49-26
49-14	Site Boundary Red Bone Marrow Dose – CFE Source Term, 72 Hours	49-26
49-15	Site Boundary Thyroid Dose – CFE Source Term, 24 Hours	49-27
49-16	Site Boundary Thyroid Dose – CFE Source Term, 72 Hours	49-27
49-17	Population Whole Body Dose – CFI Source Term, 24 Hours	49-28
49-18	Population Whole Body Dose – CFI Source Term, 72 Hours	49-28
49-19	Site Boundary Whole Body Dose – CFI Source Term, 24 Hours	49-29
49-20	Site Boundary Whole Body Dose – CFI Source Term, 72 Hours	49-29
49-21	Site Boundary Red Bone Marrow Dose – CFI Source Term, 24 Hours	49-30
49-22	Site Boundary Red Bone Marrow Dose – CFI Source Term, 72 Hours	49-30
49-23	Site Boundary Thyroid Dose – CFI Source Term, 24 Hours	49-31
49-24	Site Boundary Thyroid Dose – CFI Source Term, 72 Hours	49-31
49-25	Population Whole Body Dose – CFL Source Term, 24 Hours	49-32
49-26	Population Whole Body Dose – CFL Source Term, 72 Hours	49-32
49-27	Site Boundary Whole Body Dose – CFL Source Term, 24 Hours	49-33
49-28	Site Boundary Whole Body Dose – CFL Source Term, 72 Hours	49-33
49-29	Site Boundary Red Bone Marrow Dose – CFL Source Term, 24 Hours	49-34
49-30	Site Boundary Red Bone Marrow Dose – CFL Source Term, 72 Hours	49-34
49-31	Site Boundary Thyroid Dose – CFL Source Term, 24 Hours	49-35
49-32	Site Boundary Thyroid Dose – CFL Source Term, 72 Hours	49-35
49-33	Population Whole Body Dose – CI Source Term, 24 Hours	49-36
49-34	Population Whole Body Dose – CI Source Term, 72 Hours	49-36
49-35	Site Boundary Whole Body Dose – CI Source Term, 24 Hours	49-37
49-36	Site Boundary Whole Body Dose – CI Source Term, 72 Hours	49-37
49-37	Site Boundary Red Bone Marrow Dose – CI Source Term, 24 Hours	49-38
49-38	Site Boundary Red Bone Marrow Dose – CI Source Term, 72 Hours	49-38
49-39	Site Boundary Thyroid Dose – CI Source Term, 24 Hours	49-39
49-40	Site Boundary Thyroid Dose – CI Source Term, 72 Hours	49-39
49-41	Population Whole Body Dose – DIRECT Source Term, 24 Hours	49-40
49-42	Population Whole Body Dose – DIRECT Source Term, 72 Hours	49-40
49-43	Site Boundary Whole Body Dose – DIRECT Source Term, 24 Hours	49-41
49-44	Site Boundary Whole Body Dose – DIRECT Source Term, 72 Hours	49-41
49-45	Site Boundary Red Bone Marrow Dose – DIRECT Source Term, 24 Hours	49-42
49-46	Site Boundary Red Bone Marrow Dose – DIRECT Source Term, 72 Hours	49-42
49-47	Site Boundary Thyroid Dose – DIRECT Source Term, 24 Hours	49-43
49-48	Site Boundary Thyroid Dose – DIRECT Source Term, 72 Hours	49-43
49-49	Population Whole Body Dose – IC Source Term, 24 Hours	49-44
49-50	Population Whole Body Dose – IC Source Term, 72 Hours	49-44
49-51	Site Boundary Whole Body Dose – IC Source Term, 24 Hours	49-45
49-52	Site Boundary Whole Body Dose – IC Source Term, 72 Hours	49-45
49-53	Site Boundary Red Bone Marrow Dose – IC Source Term, 24 Hours	49-46

LIST OF FIGURES (cont.)

Figure No.	Title	Page
49-54	Site Boundary Red Bone Marrow Dose – IC Source Term, 72 Hours	49-46
49-55	Site Boundary Thyroid Dose – IC Source Term, 24 Hours	49-47
49-56	Site Boundary Thyroid Dose – IC Source Term, 72 Hours	49-47
49-57	Overall Dose Risk – Site Boundary Whole Body EDE Dose, 24 Hours	49-48
49-58	Overall Dose Risk – Site Boundary Red Bone Marrow Dose (Acute), 24 Hours	49-49
51-1	AP1000 Base Core Damage Frequency Uncertainty Analysis	51-11
51-2	AP1000 Sensitivity Case Uncertainty Analysis	51-11
51B-1	Distribution for Plant Core Damage Frequency	51B-2
51B-2	Safety Injection Line Break	51B-2
51B-3	Large LOCA	51B-3
51B-4	Large Spurious ADS Actuation	51B-3
51B-5	Small LOCA	51B-4
51B-6	Medium LOCA	51B-4
51B-7	Reactor Vessel Rupture	51B-5
51B-8	Steam Generator Tube Rupture	51B-5
51B-9	Safety Injection Line Break – Sequence 7	51B-6
51B-10	Large LOCA – Sequence 9	51B-6
51B-11	Spurious ADS – Sequence 8	51B-7
51B-12	Safety Injection Line Break – Sequence 8d	51B-7
51B-13	Reactor Vessel Rupture – Sequence 2	51B-8
51B-14	Small LOCA – Sequence 5	51B-8
51B-15	Medium LOCA – Sequence 5	51B-9
51B-16	Small LOCA – Sequence 12	51B-9
51B-17	Medium LOCA – Sequence 12	51B-10
51B-18	Spurious ADS – Sequence 9	51B-10
51B-19	Spurious ADS – Sequence 7	51B-11
51B-20	Safety Injection Line Break – Sequence 3	51B-11
51B-21	SGTR Event – Sequence 41	51B-12
51B-22	ATWS Precursor with no MFW – Sequence 23	51B-12
51B-23	Small LOCA – Sequence 9	51B-13
51B-24	Medium LOCA – Sequence 9	51B-13
51B-25	SGTR Event – Sequence 13	51B-14
51B-26	Large LOCA – Sequence 8	51B-14
51B-27	CMT Line Break – Sequence 5	51B-15
54-1	Loss of Offsite Power During Hot/Cold Shutdown (RCS Filled) Event Tree (Sheets 1 – 2)	54-64
54-2	Loss of RNS During Hot/Cold Shutdown (RCS Filled) Event Tree	54-66
54-3	Loss of CCW/SW During Hot/Cold Shutdown (RCS Filled) Event Tree	54-67
54-4	LOCA/RNS-V024 Opens During Hot/Cold Shutdown (RCS Filled) Event Tree	54-68
54-5	LOCA/RNS Pipe Rupture During Hot/Cold Shutdown (RCS Filled) Event Tree	54-69

LIST OF FIGURES (cont.)

Figure No.	Title	Page
54-6	Overdraining of Reactor Coolant System During Draindown to Mid-loop Event Tree	54-70
54-7	Loss of Offsite Power During RCS drained Condition Event Tree	54-71
54-8	Loss of RNS During RCS drained Condition Event Tree	54-72
54-9	Loss of CCW/SW During RCS drained Condition Event Tree	54-73
54-10	LOCA/RNS-V024 Opens During RCS drained Condition Event Tree	54-74
55-1	Seismic Initiating Event Hierarchy Tree	55-30
57-1	Example Event Tree Model	57-107
57-2	Contribution of Plant Areas to Fire CDF	57-108
57-3	Contribution of Fire Area to Fire CDF	57-109
57A-1	DAS-ACT Fault Tree	57A-37
57C-1	0000 AF 00 Yard Building (Including Transformer Yard)	57C-12
57C-2	1200 AF 01 RCA of Auxiliary Building (All Zones)	57C-13
57C-3	1200 AF 02 New Fuel and Used Fuel Storage, Waste Disposal Container (All Zones)	57C-14
57C-4	1200 AF 03 Corridors 100′ & 117′ 6″	57C-15
57C-5	1201 AF 02 Division B Batteries/DC Equipment Room/Instrumentation and Control	57C-16
57C-6	1201 AF 03 Division D DC Equipment/I&C	57C-17
57C-7	1201 AF 04 Division B/D VBS Equipment	57C-18
57C-8	1201 AF 05 MSIV Compartment A	57C-19
57C-9	1201 AF 06 MSIV Compartment B	57C-20
57C-10	1202 AF 02 Northeast Elevator Shaft	57C-21
57C-11	1202 AF 03 Division C Batteries/DC Equipment/I&C Room/ RCP Trip Switchgear Room/I&C Penetration Room	57C-22
57C-12	1202 AF 04 Division A Electrical Equipment/Battery Room/I&C Room	57C-23
57C-13	1204 AF 01 RNS Pump Room B	57C-24
57C-14	1204 AF 03 South Shield Building Elevator Shaft	57C-25
57C-15	1205 AF 02 Southeast Elevator Shaft	57C-26
57C-16	1210 AF 01 Corridor/Spare Battery Room/Spare Room/Spare Battery Charger Room	57C-27
57C-17	1220 AF 01 Division B RCP Trip Switchgear/Spare Room/Corridor 82′ 6″	57C-28
57C-18	1220 AF 02 Lower Annulus Valve Area	57C-29
57C-19	1230 AF 01 Corridor Division A, B, C, D and Remote Shutdown Workstation	57C-30
57C-20	1230 AF 02 Non-Class 1E Electrical Compartment - 100′	57C-31
57C-21	1232 AF 01 Remote Shutdown Workstation	57C-32
57C-22	1240 AF 01 Non-Class 1E Electrical Compartment - 117′	57C-33
57C-23	1242 AF 02 Division A Penetration Area	57C-34
57C-24	1243 AF 01 Reactor Trip Switchgear I	57C-35

LIST OF FIGURES (cont.)

Figure No.	Title	Page
57C-25	1243 AF 02 Reactor Trip Switchgear II	57C-36
57C-26	1250 AF 01 Nonradioactive Ventilation System	57C-37
57C-27	2000 AF 01 Turbine Building Floor	57C-38
57C-28	2003 AF 01 Auxiliary Boiler Equipment Room	57C-39
57C-29	2009 AF 02 Elevator Machine Room	57C-40
57C-30	2033 AF 02 Motor-Driven Fire Pump Room	57C-41
57C-31	2040 AF 01 Clean and Dirty Lube Oil Storage	57C-42
57C-32	2043 AF 01 Chemical Laboratory	57C-43
57C-33	2050 AF 01 Lube Oil Conditioner Room	57C-44
57C-34	2052 AF 01 Southwest 6.9KV Switchgear Room	57C-45
57C-35	2053 AF 01 Electrical Equipment Room	57C-46
57C-36	2053 AF 02 Northwest 6.9KV Switchgear Room	57C-47
57C-37	4003 AF 01 Demineralized Water Deoxygenating Room/ Air Handling Equipment Rooms	57C-48
57C-38	4031 AF 01 Battery Room and Battery Charger Room 1	57C-49
57C-39	4031 AF 02 Battery Room and Battery Charger Room 2/ Computer Room B/Shift Turnover Room	57C-50
57C-40	4031 AF 05 Corridor/Spare Battery Room/Spare Room/ Spare Battery Charger Room	57C-51
57C-41	4031 AF 06 Central Alarm Station/Security Room 1	57C-52
57C-42	4032 AF 01 Decontamination Room, Non-Radiological and Radiological Controlled Area Entry/Exit Area	57C-53
57C-43	4032 AF 02 Containment Access Corridor Elevation 107′ 2″	57C-54
57C-44	4033 AF 01 Hot Machine Shop	57C-55
57C-45	4034 AF 01 General Offices	57C-56
57C-46	4041 AF 01 Conference Rooms/Computer Room A/Corridor	57C-57
57C-47	4041 AF 02 Corridor/Restroom	57C-58
57C-48	4042 AF 01 Non-Class 1E Switchgear #1	57C-59
57C-49	4042 AF 02 Non-Class 1E Switchgear #2	57C-60
57C-50	4052 AF 01 Staging and Storage Area/Containment Air Filtration Exhaust Rooms A & B	57C-61
57C-51	5031 AF 01 Radwaste Building	57C-62
57C-52	6030 AF 01 Diesel Generator Room A	57C-63
57C-53	6030 AF 02 Diesel Generator Room B	57C-64
57C-54	6030 AF 03 Fuel Oil Day Tank Room A	57C-65
57C-55	6030 AF 04 Fuel Oil Day Take Room B	57C-66
57C-56	1100 AF 11204 Reactor Coolant Drain Tank Room	57C-67
57C-57	1100 AF 11206 Accumulator Room A	57C-68
57C-58	1100 AF 11207 Accumulator Room B	57C-69
57C-59	1100 AF 11208 RNS Valve Room	57C-70
57C-60	1100 AF 11300A Maintenance Floor (SE Quadrant Access)	57C-71
57C-61	1100 AF 11300B Maintenance Floor (NNE Quadrant) and RCDT Access	57C-72
57C-62	1100 AF 11301 SG Compartment 1	57C-73

LIST OF FIGURES (cont.)

Figure No.	Title	Page
57C-63	1100 AF 11302 SG Compartment 2	57C-74
57C-64	1100 AF 11303 Pressurizer Compartment	57C-75
57C-65	1100 AF 11303A ADS Lower Valve Area	57C-76
57C-66	1100 AF 11303B ADS Upper Valve Area	57C-77
57C-67	1100 AF 11500 Operating Deck	57C-78
57C-68	1200 AF 12341 Middle Annulus	57C-79
57C-69	1200 AF 12555 Main Control Room Emergency Habitability System Air Storage/Operating Deck Staging Area	57C-80
59-1	Contribution of Initiating Events to Core Damage	59-99
59-2	24-Hour Site Boundary Dose Cumulative Frequency Distribution	59-100