10 CFR 50.55a

Progress Energy

Serial: RNP-RA/03-0012

FEB 1 1 2003

United States Nuclear Regulatory Commission
Attn: Document Control Desk
Washington, DC 20555

H. B. ROBINSON STEAM ELECTRIC PLANT, UNIT NO. 2
DOCKET NO. 50-261/LICENSE NO. DPR-23

REQUEST FOR RELIEF PERTAINING TO EXAMINATION
COVERAGE LESS THAN ESSENTIALLY 100 PERCENT (RELIEF REQUEST NO. 34)

Ladies and Gentlemen:

In accordance with 10 CFR 50.55a(g)(6)(i), H. B. Robinson Steam Electric Plant (HBRSEP), Unit No. 2, requests relief from the requirements of the American Society of Mechanical Engineers (ASME) Boiler and Pressure Vessel (B&PV) Code, 1986 Edition, which was applicable during the Third Ten-Year Inservice Inspection (ISI) Interval, which began on February 19, 1992. The ISI Program Plan for the third interval implemented the 1986 Edition of Section XI of the ASME B&PV Code, with the exception of piping weld examinations for Class 1, Examination Category B-J, which are determined by the requirements of the 1974 Edition, through Summer 1975 Addenda, as allowed by 10 CFR 50.55a.

This relief request describes specific examinations that did not achieve "essentially 100 percent" during the Third Ten-Year ISI Interval for HBRSEP, Unit No. 2. As stated in NRC Information Notice 98-42, "Implementation of 10 CFR 50.55a(g) Inservice Inspection Requirements," licensees are required to submit requests for relief to the NRC on the basis of impracticality before 1 year after the end of the effective interval as required by 10 CFR 50.55a(g)(5)(iv). The reason for limitation of the applicable examinations is consistent with the statement in 10 CFR 50.55a(g)(4), which states, in part that "components... must meet the requirements... to the extent practical within the limitations of design, geometry and materials of construction of the components."

HBRSEP, Unit No. 2, operating license was approved in July 1970. The original safety evaluation report, dated May 18, 1970, states that the ISI program for HBRSEP, Unit No. 2, is described in the Technical Specifications. This program pre-dates the issuance of ASME Section XI.

A047

Progress Energy Carolinas, Inc.
3581 West Entrance Road
Hartsville, SC 29550

In the implementation of ISI requirements during the Third Ten-Year Interval for HBRSEP, Unit No. 2, the program inspection requirements were based on the 1986 Edition of ASME Section XI.

Attachment I provides the details of Relief Request No. 34, for HBRSEP, Unit No. 2, Third Ten-Year ISI interval. Attachment II provides informational drawings that show approximate locations of the applicable components.

If you have any questions regarding this matter, please contact me.

Sincerely,

CA Castell
for

C. T. Baucom
Supervisor – Licensing/Regulatory Programs

CAC/cac

Attachments:

I. Relief Request No. 34
II. Informational Drawings for Relief Request No. 34

c: Mr. L. A. Reyes, NRC, Region II
Mr. C. Patel, NRC, NRR
NRC Resident Inspector

H. B. ROBINSON STEAM ELECTRIC PLANT, UNIT NO. 2

REQUEST FOR RELIEF PERTAINING TO EXAMINATION COVERAGE LESS THAN ESSENTIALLY 100 PERCENT (RELIEF REQUEST NO. 34)

Component for Which Relief is Requested

The list of components is provided in Table 1 for this relief request.

Code Examination Requirements

The applicable code edition is the 1986 Edition of the American Society of Mechanical Engineers (ASME) Boiler and Pressure Vessel (B&PV) Code, Section XI. The applicable code examination requirements, as interpreted by Code Case N-460, "Alternative Examination Requirements for Class 1 and Class 2 Welds, Section XI, Division 1," for the components listed in Table 1, require that examination coverage be essentially 100% of the subject weld or component.

Requested Relief

Relief is requested from the examination requirements of the ASME Code, 1986 Edition, Section XI, as interpreted by Code Case N-460, "Alternative Examination Requirements for Class 1 and Class 2 Welds, Section XI, Division 1," which states that a reduction in examination coverage on any Class 1 or Class 2 weld may be accepted provided the reduction in coverage for that weld is less than 10% (i.e., coverage is greater than 90%). Table 1 lists the examinations that did not achieve greater than 90% coverage. Table 1 also lists the coverage that was achieved and the reason for the limitation.

Basis for Requested Relief

This relief is requested pursuant to 10 CFR 50.55a(g)(6)(i) on the basis that compliance with the referenced code requirements is impractical and that public health and safety will not be endangered by allowing the proposed alternatives in lieu of code requirements. The examination coverage achieved for the components listed in Table 1, are the maximum extent practical for these components. Substantial burden would be incurred to achieve additional coverage of these components. It is judged that patterns of degradation of the listed components would have been detected by the coverage that was achieved. Therefore, reasonable assurance of the integrity of the listed components has been provided.

Implementation Schedule

This relief is requested for and will be included with the record for HBRSEP, Unit No. 2, Third Ten-Year ISI Interval, which began on February 19, 1992, and ended on February 18, 2002.

Table 1. Components, Examination Categories, and Exam Limitations

Drawing/ Component	Description	Category	Item	NDE	Exam Coverage	Limitation/Comment	Examination Type (Manual or Automatated)
101/03	Reactor Vessel Flange to Shell	B-A	B1.30	VOL	73%	Proximity of the flange taper and the outlet nozzle integral extension.	Automated
101/06	Reactor Vessel Lower Barrel to Lower Head	B-A	B1.11	VOL	82%	Proximity of the core barrel stabilizing lugs.	Automated
101/07	Reactor Vessel Lower Head to Intermediate Lower Head	B-A	B1.21	VOL	5%	Proximity of the lower head instrumentation tubes.	Automated
101/08	Reactor Vessel Closure Head Meridional Welds	B-A	B1.22	VOL	49%	Permanent insulation ring, closure head configuration.	Manual
101/14	Reactor Vessel Upper Shell Longitudinal Weld at 70°	B-A	B1.12	VOL	90%	Proximity of the inlet nozzle inner radius section.	Automated
101/15	Reactor Vessel Upper Shell Longitudinal Weld at 190°	B-A	B1.12	VOL	90%	Proximity of the inlet nozzle inner radius section.	Automated
101/16	Reactor Vessel Upper Shell Longitudinal Weld at 310°	B-A	B1.12	VOL	90%	Proximity of the inlet nozzle inner radius section.	Automated
101/22	Reactor Vessel Lower Shell Longitudinal Weld at 0°	B-A	B1.12	VOL	73%	Proximity of the core barrel stabilizing lugs @ 0°.	Automated

Drawing/ Component	Description	Category	Item	NDE	Exam Coverage	Limitation/Comment	Examination Type (Manual or Automatated)
101/23	Reactor Vessel Lower Head Meridional Weld at 30°	B-A	B1.22	VOL	63%	Proximity of the lower head instrumentation tubes.	Automated
101/24	Reactor Vessel Lower Head Meridional Weld at 90°	B-A	B1.22	VOL	44%	Proximity of the lower head instrumentation tubes and the core barrel stabilizing lug @ 90°.	Automated
101/25	Reactor Vessel Lower Head Meridional Weld at 150°	B-A	B1.22	VOL	66%	Proximity of the lower head instrumentation tubes.	Automated
101/26	Reactor Vessel Lower Head Meridional Weld at 210°	B-A	B1.22	VOL	56%	Proximity of the lower head instrumentation tubes.	Automated
101/27	Reactor Vessel Lower Head Meridional Weld at 270°	B-A	B1.22	VOL	44%	Proximity of the lower head instrumentation tubes and the core barrel stabilizing lug @ 270°.	Automated
101/28	Reactor Vessel Lower Head Meridional Weld at 330°	B-A	B1.22	VOL	69%	Proximity of the lower head instrumentation tubes.	Automated
101A/29	Reactor Vessel Hot Leg Loop "B" Nozzle Weld at 10°	B-D	B3.90	VOL	59%	Proximity of the outlet nozzle integral extension.	Automated
101A/30	Reactor Vessel Cold Leg Loop "A" Nozzle Weld at 80°	B-D	B3.90	VOL	90%	Proximity of the inlet nozzle inner radius section.	Automated

Drawing/ Component	Description	Category	Item	NDE	Exam Coverage	Limitation/Comment	Examination Type (Manual or Automatated)
101A/31	Reactor Vessel Hot Leg Loop "A" Nozzle Weld at 130°	B-D	B3.90	VOL	55%	Proximity of the outlet nozzle integral extension.	Automated
101A/32	Reactor Vessel Cold Leg Loop "C" Nozzle Weld at 200°	B-D	B3.90	VOL	90%	Proximity of the inlet nozzle inner radius section.	Automated
101A/33	Reactor Vessel Hot Leg Loop "C" Nozzle Weld at 250°	B-D	B3.90	VOL	55%	Proximity of the outlet nozzle integral extension.	Automated
107/04DM	Hot Leg Loop "A" Safe-End to Hot Leg Nozzle	B-F	B5.70	VOL	75%	Weld/component configuration.	Manual
107/05DM	Crossover Leg Loop "A" S/G Nozzle to Safe-End	B-F	B5.70	VOL	75%	Weld/component configuration.	Manual
107A/04DM	Hot Leg Loop "B" Safe-End to Hot Leg Nozzle	B-F	B5.70	VOL	75%	Weld/component configuration.	Manual
107A/05DM	Crossover Leg Loop "B" S/G Nozzle to Safe-End	B-F	B5.70	VOL	75%	Weld/component configuration.	Manual
107B/04DM	Hot Leg Loop "C" Safe-End to Hot Leg Nozzle	B-F	B5.70	VOL	75%	Weld/component configuration.	Manual
107B/05DM	Crossover Leg Loop "C" S/G Nozzle to Safe-End	B-F	B5.70	VOL	75%	Weld/component configuration.	Manual
117/01DM	Pressurizer Relief Nozzle to Safe-End	B-F	B5.40	VOL	75%	Nozzle configuration.	Manual
118/01DM	Pressurizer Safety Nozzle to Safe-End	B-F	B5.40	VOL	88%	Nozzle configuration.	Manual

Drawing/ Component	Description	Category	Item	NDE	Exam Coverage	Limitation/Comment	Examination Type (Manual or Automatated)
144/C-07	Reactor Coolant Pump "C", Stud #7	B-G-1	B6.180	VOL	74%	Access restricted at bottom 8 inches for the stud probe. Future exams (Fourth Ten-Year Interval) are expected to achieve full volumetric examination of this stud utilizing the PDI technique.	Manual
107/04	Hot Leg Loop "A" Elbow to Safe-End	B-J	B9.11	VOL	75%	Weld/component configuration.	Manual
107/05	Crossover Leg Loop "A" Safe-End to Elbow	B-J	B9.11	VOL	75%	Weld/component configuration.	Manual
107A/04	Hot Leg Loop "B" Elbow to Safe-End	B-J	B9.11	VOL	75%	Weld/component configuration.	Manual
107A/05	Crossover Leg Loop "B" Safe-End to Elbow	B-J	B9.11	VOL	75%	Weld/component configuration.	Manual
107A/07	Crossover Leg Loop "B" Pipe to Elbow	B-J	B9.11	VOL	84%	Weld/component configuration.	Manual
107B/04	Hot Leg Loop "C" Elbow to Safe-End	B-J	B9.11	VOL	75%	Weld/component configuration.	Manual
107B/05	Crossover Leg Loop "C" Safe-End to Elbow	B-J	B9.11	VOL	75%	Weld/component configuration.	Manual
107B/11	Cold Leg Loop "C" RC Pump to Pipe	B-J	B9.11	VOL	50%	Weld/component configuration.	Manual
108/01BC	Loop Pipe to 12" Branch Connection	B-J	B9.31	VOL	58%	Nozzle configuration.	Manual
112/01BC	Loop Pipe to 10" Branch Connection	B-J	B9.31	VOL	50%	Nozzle configuration.	Manual

Drawing/ Component	Description	Category	Item	NDE	Exam Coverage	Limitation/Comment	Examination Type (Manual or Automatated)
112/19	Safety Injection Accumulator Discharge Elbow to Tee	B-J	B9.11	VOL	50%	Elbow to Tee configuration.	Manual
113/01	RHR Return Line 10" X 8" Reducer to Valve SI-876A	B-J	B9.11	VOL	50%	Reducer to valve configuration.	Manual
114/03	RHR Return Line Pipe to Valve SI-876B	B-J	B9.11	VOL	50%	Pipe to valve configuration.	Manual
115/04	RHR Return Line Pipe to Valve SI-876C	B-J	B9.11	VOL	50%	Pipe to valve configuration.	Manual
116B/18	Pressurizer Spray Line Elbow to Pipe	B-J	B9.11	VOL	50%	Elbow to Pipe configuration.	Manual
116B/19	Pressurizer Spray Line Pipe to Safe-End	B-J	B9.11	VOL	85%	Pipe to safe-end configuration.	Manual
118A/01	Pressurizer Safety Line Safe-End to Pipe	B-J	B9.11	VOL	50%	Safe-end to pipe configuration.	Manual
118B/08	Pressurizer Spray Line Elbow to Flange	B-J	B9.11	VOL	50%	Elbow to flange configuration.	Manual
133/10	Seal Injection Pipe to Elbow	B-J	B9.40	SUR	90%	Limited at 0° due to proximity of the elbow to the ceiling.	Manual
202/01	Boron Injection Tank Shell to Lower Head Weld	C-A	C1.20	VOL	83%	Vessel weld/component configuration.	Manual
202/01	Boron Injection Tank Shell to Upper Head Weld	C-A	C1.20	VOL	89%	Vessel weld/component configuration.	Manual

Drawing/ Component	Description	Category	Item	NDE	Exam Coverage	Limitation/Comment	Examination Type (Manual or Automatated)
204/A02	Residual Heat Exchanger "A" Shell to Lower Head Weld	C-A	C1.20	VOL	68%	Inlet & outlet nozzles and welded supports 204/WS1-A and 204/WS2-A.	Manual
202/03	Boron Injection Tank Lower Head to Dome Weld	C-B	C2.21	VOL	74%	Vessel weld/component configuration.	Manual
202/04	Boron Injection Tank Upper Head to Dome Weld	C-B	C2.21	VOL	84%	Vessel weld/component configuration.	Manual
205/08	Steam Generator "A" Upper Shell to Feedwater Nozzle	C-B	C2.21	VOL	49%	Nozzle configuration.	Manual
205A/07	Steam Generator "B" Upper Head to Steam Nozzle	C-B	C2.21	VOL	44%	Nozzle configuration.	Manual
205A/08	Steam Generator "B" Upper Shell to Feedwater Nozzle	C-B	C2.21	VOL	49%	Nozzle configuration.	Manual
202/WS-1 202/WS-2 202/WS-3 202/WS-4	Boron Injection Tank Integral Attachments (Support Legs)	C-C	C3.10	SUR	88%	Boron Injection Tank support leg configuration.	Manual
204/WS1-A	Residual Heat Exchanger Integral Attachments (Support Legs)	C-C	C3.10	SUR	80%	Residual Heat Exchangers exam is limited by physical access/component configuration.	Manual
212/A-WS	Main Steam System Integral Attachment	C-C	C3.10	SUR	50%	Support configuration.	Manual
212/R-WS	Main Steam System Integral Attachment	C-C	C3.10	SUR	50%	Support configuration.	Manual

Drawing/ Component	Description	Category	Item	NDE	Exam Coverage	Limitation/Comment	Examination Type (Manual or Automatated)
213/F-WS	Main Steam System Integral Attachment	C-C	C3.10	SUR	84%	Support configuration.	Manual
214/K-WS	Main Steam System Integral Attachment	C-C	C3.10	SUR	50%	Support configuration.	Manual
216/G-WS	Feedwater System Integral Attachment	C-C	C3.10	SUR	85%	Support configuration.	Manual
221A/I-WS	Safety Injection System Integral Attachment	C-C	C3.10	SUR	75%	Support configuration.	Manual
233/D-WS	Safety Injection System Integral Attachment	C-C	C3.10	SUR	50%	Support configuration.	Manual
219A/203	Safety Injection System Reducer to Pipe	C-F-1	C5.11	VOL	50%	Weld crown configuration.	Manual
220/38	RHR System Pipe to Elbow	C-F-1	C5.11	VOL	83%	Weld crown configuration.	Manual
220A/69	RHR System Pipe to Elbow	C-F-1	C5.11	VOL	50%	Weld crown configuration.	Manual
231/30	Safety Injection System Pipe to Elbow	C-F-1	C5.21	VOL	50%	Weld crown configuration.	Manual
239/01	Safety Injection System Pipe to Elbow	C-F-1	C5.21	VOL	90%	Weld crown configuration.	Manual
239/12	Safety Injection System Pipe to Elbow	C-F-1	C5.21	VOL	52%	Weld crown configuration.	Manual
239/13	Safety Injection System Pipe to Elbow	C-F-1	C5.21	VOL	42%	Weld crown configuration.	Manual

Drawing/ Component	Description	Category	Item	NDE	Exam Coverage	Limitation/Comment	Examination Type (Manual or Automatated)
239/14	Safety Injection System Elbow to Pipe	C-F-1	C5.21	VOL	41%	Weld crown configuration.	Manual
240/13	Safety Injection Pump to Elbow	C-F-1	C5.21	VOL	86%	Weld crown/component configuration.	Manual
212/21	Main Steam System Pipe to Valve MS-V1-3A	C-F-2	C5.51	VOL	75%	Pipe to valve configuration.	Manual
213/17	Main Steam System Pipe to Valve MS-V1-3B	C-F-2	C5.51	VOL	85%	Pipe to valve configuration.	Manual
213/22	Main Steam System Branch Connection to Valve SV1-1B	C-F-2	C5.51	VOL	75%	Pipe to valve configuration.	Manual
214/19	Main Steam System Pipe to Valve MS-V1-3C	C-F-2	C5.51	VOL	75%	Pipe to valve configuration.	Manual
216/15	Main Feedwater System Pipe to Valve FW-8B	C-F-2	C5.51	VOL	80%	Pipe to valve configuration.	Manual

United States Nuclear Regulatory Commission
Attachment II to Serial: RNP-RA/03-0012
59 Pages

H. B. ROBINSON STEAM ELECTRIC PLANT, UNIT NO. 2

INFORMATIONAL DRAWINGS FOR RELIEF REQUEST NO. 34

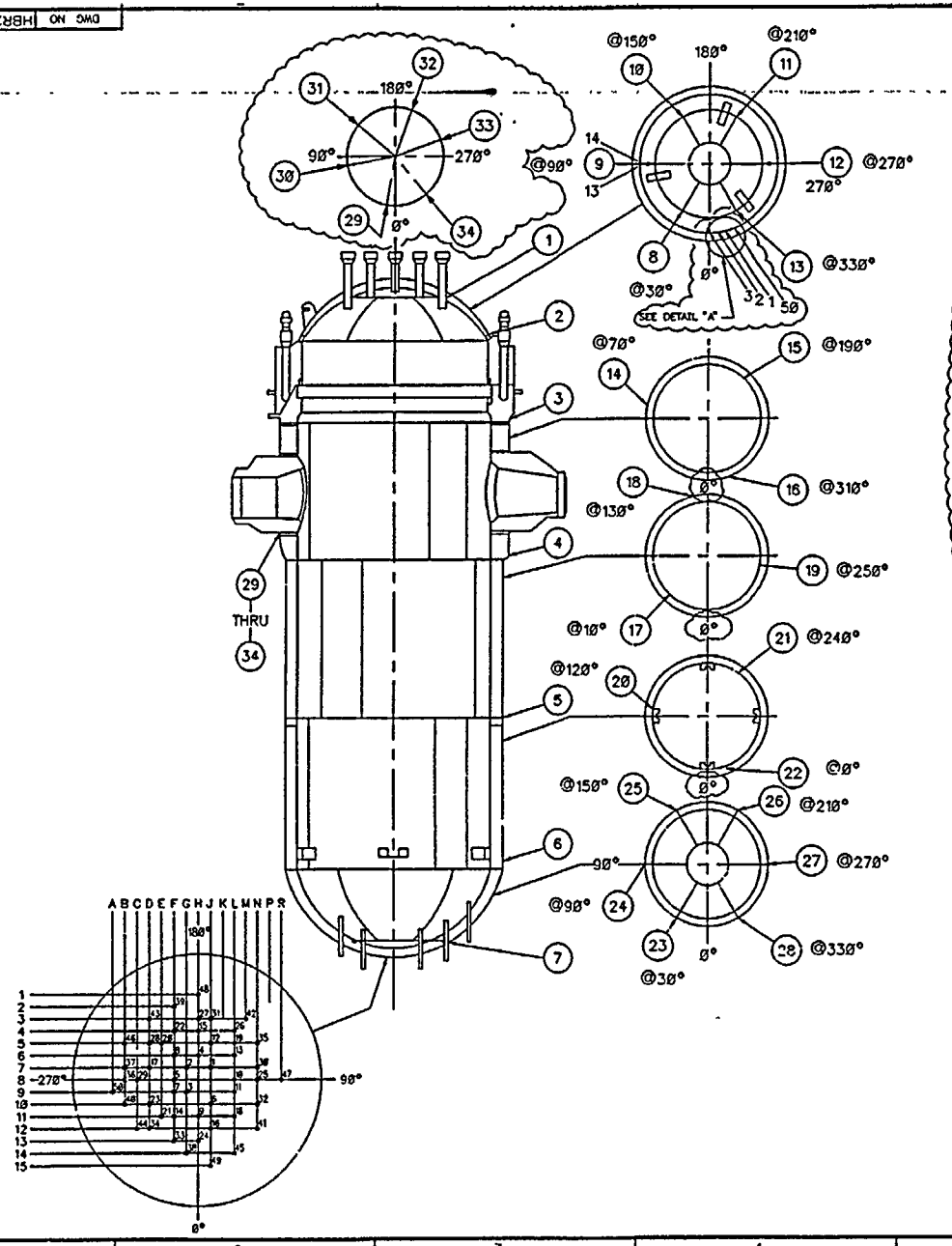

WELD ID	DESCRIPTION	DEGREE LOCATION
29	"B" LOOP HOT LEG OUTLET	10°
30	"A" LOOP COLD LEG INLET	80°
31	"A" LOOP HOT LEG OUTLET	130°
32	"C" LOOP COLD LEG INLET	200°
33	"C" LOOP HOT LEG OUTLET	250°
34	"B" LOOP COLD LEG INTLET	320°

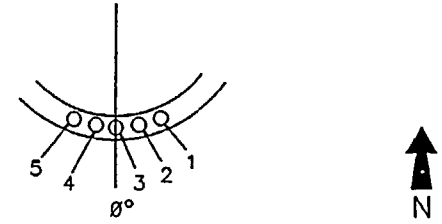

DETAIL "A"

REV	DATE	DESCRIPTION	DWN	DSN	CHK	DV	DPE	DPPE
3	5/20/01	DCR 01-277	ESP	—				CLO
2	6/14/00	DCR 00-216	ESP	—	JLW	CLO		
1	12/15/94	This drawing has been redrawn in CAD and reflects the current as-built condition.				SEE REV 1		

PROFESSIONAL ENGINEER:

QUALITY LEVEL: SAFETY RELATED

CAROLINA POWER & LIGHT COMPANY
NUCLEAR ENGINEERING DEPARTMENT

CP&L

PLANT: ROBINSON PLANT – UNIT 2

SCALE: NONE

TITLE:

REACTOR VESSEL SHELL WELDS

CPL-101

PLANT DWG NO.: HBR2-10618 REV: 3 SHT 1 OF:

MOD SECTION NO: SHT: OF:

DWG NO HBR2-10618 SH 1

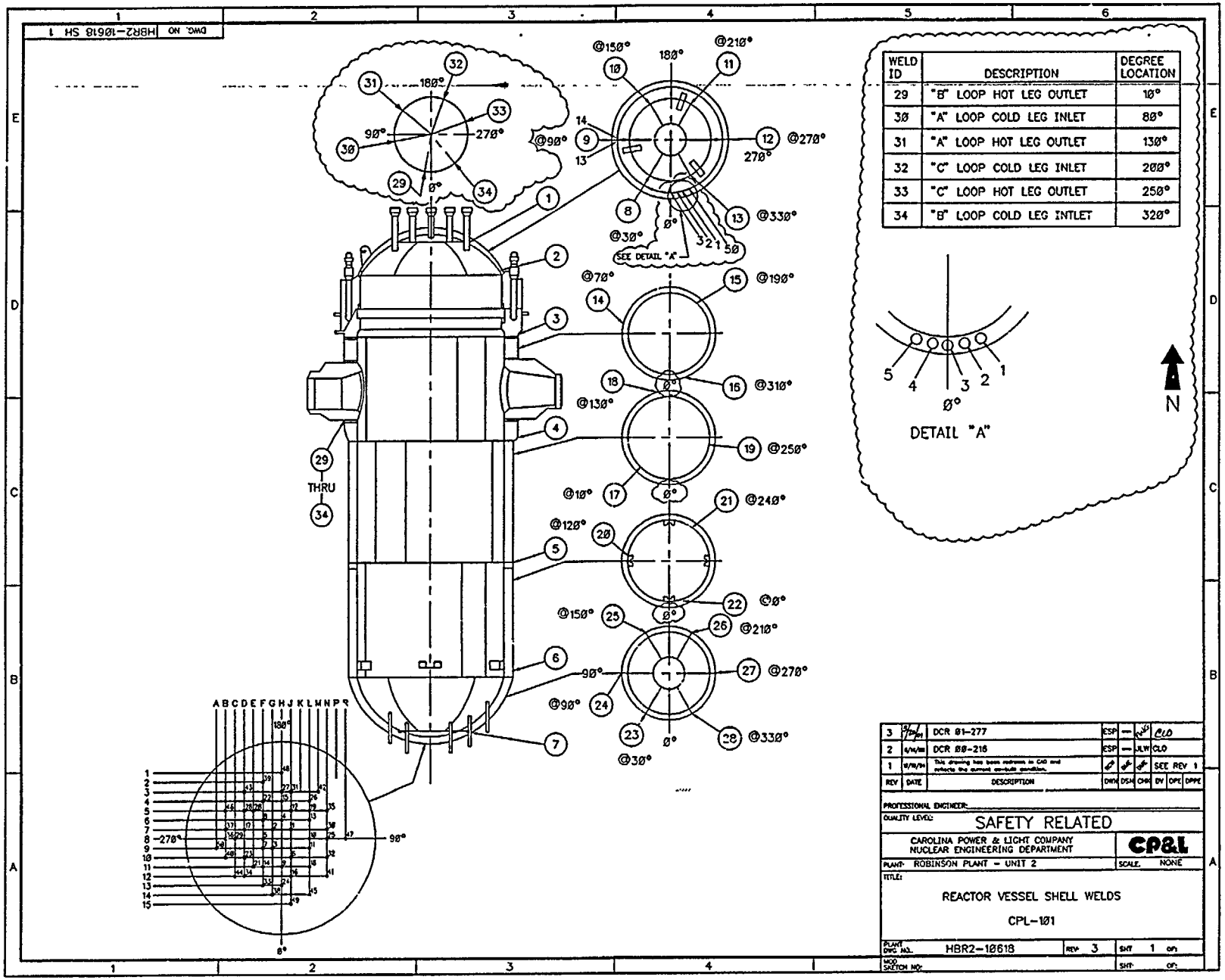
DWG. NO HBR2-10618 SH 1
@15Ø°
18Ø°
@21Ø°
@27Ø°
27Ø°
@33Ø°
@3Ø°
SEE DETAIL "A"
@7Ø°
@19Ø°
@31Ø°
@13Ø°
@25Ø°
@1Ø°
@24Ø°
@12Ø°
@Ø°
@15Ø°
@21Ø°
9Ø°
@27Ø°
@9Ø°
@33Ø°
@3Ø°
29 THRU 34
DETAIL "A"
N
WELD ID | DESCRIPTION | DEGREE LOCATION
29 | "B" LOOP HOT LEG OUTLET | 1Ø°
3Ø | "A" LOOP COLD LEG INLET | 8Ø°
31 | "A" LOOP HOT LEG OUTLET | 13Ø°
32 | "C" LOOP COLD LEG INLET | 2ØØ°
33 | "C" LOOP HOT LEG OUTLET | 25Ø°
34 | "B" LOOP COLD LEG INTLET | 32Ø°
3 | DCR Ø1-277 | ESP | JLW | CLO
2 | DCR ØØ-216 | ESP | JLW | CLO
1 | This drawing has been redrawn in CAD and reflects the current as-built condition. | SEE REV 1
REV | DATE | DESCRIPTION | DWN | DSN | CHK | DV | OPE | DPPE
PROFESSIONAL ENGINEER:
QUALITY LEVEL: SAFETY RELATED
CAROLINA POWER & LIGHT COMPANY
NUCLEAR ENGINEERING DEPARTMENT
CP&L
PLANT: ROBINSON PLANT - UNIT 2
SCALE: NONE
TITLE:
REACTOR VESSEL SHELL WELDS
CPL-1Ø1
PLANT DWG. NO.: HBR2-1Ø618
REV: 3
SHT: 1 OF:
MOD SKETCH NO:
SHT: OF:

DWG. NO HBR2-10618 SHT. 002

R. V. NOZZLE TO VESSEL WELDS

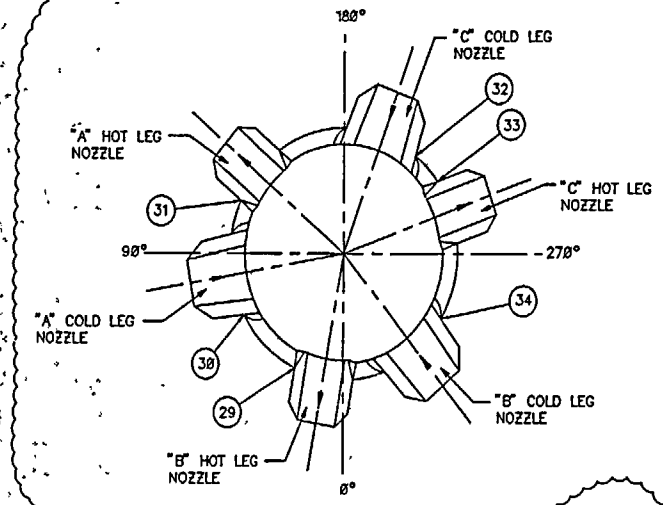

WELD ID	DESCRIPTION	DEGREE LOCATION
29	"B" LOOP HOT LEG OUTLET	10°
30	"A" LOOP COLD LEG INLET	80°
31	"A" LOOP HOT LEG OUTLET	130°
32	"C" LOOP COLD LEG INLET	200°
33	"C" LOOP HOT LEG OUTLET	250°
34	"B" LOOP COLD LEG INLET	320°

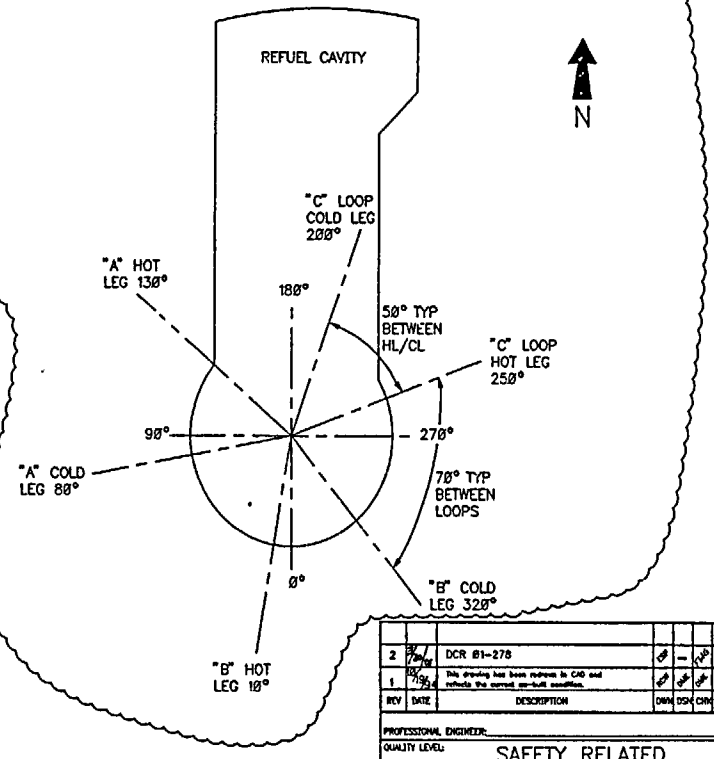

VESSEL FLANGE LIGAMENTS

LIGAMENT SURROUNDING STUD HOLE TO CORRESPOND WITH STUD HOLE NUMBER

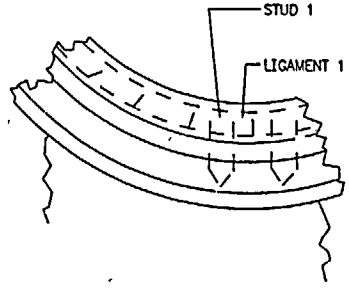

REV	DATE	DESCRIPTION	DWN	DSN	CHK	DV	DPE	DPM
2	8/7/01	DCR 01-278		–		ELD		
1	10/7/94	This drawing has been redrawn in CAD and reflects the correct as-built condition.				SEE REV 1		

PROFESSIONAL ENGINEER:

QUALITY LEVEL: SAFETY RELATED

CAROLINA POWER & LIGHT COMPANY
NUCLEAR ENGINEERING DEPARTMENT

CP&L

PLANT: ROBINSON PLANT – UNIT 2 SCALE: NONE

TITLE:

VESSEL NOZZLE & FLANGE WELDS

CPL-101A

PLANT DWG NO.: HBR2-10618 REV: 2 SHT: 2 OF 1

MOD SKETCH NO.: SHT: OF:

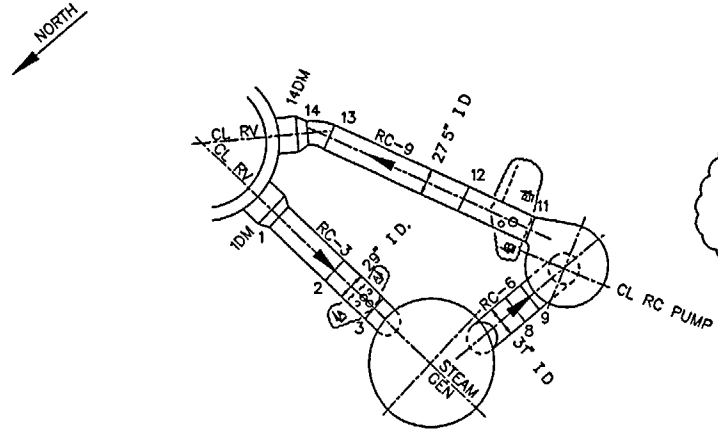

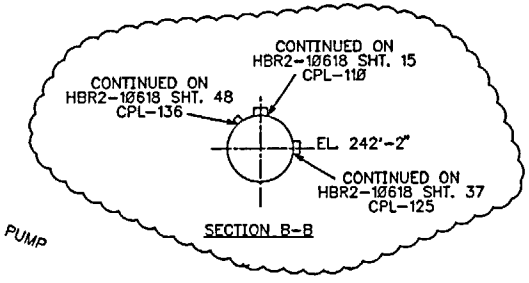

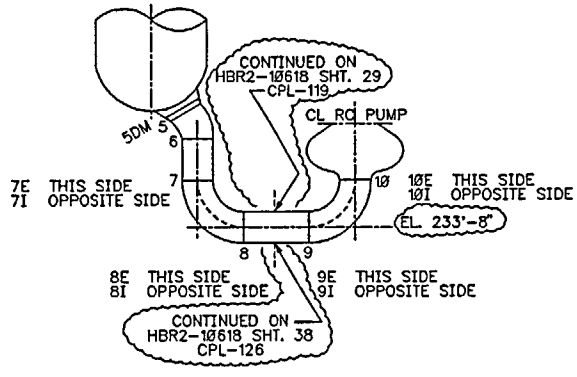

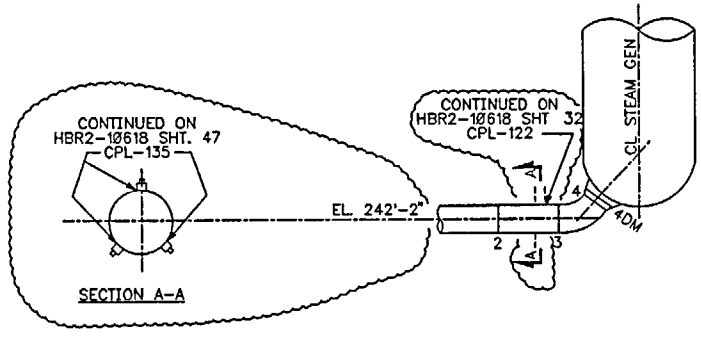

NOTES
1 CL = CENTER LINE
2. ► = FLOW
3 DM = DISSIMILAR METAL

REV	DATE	DESCRIPTION	DWN	DSN	CHK	DV	DPE	DPPE
3	11/17/00	DCR 01-663	ESP	-	RLD	-	CLD	
2	1/31/96	DCR 95-1745	DME	-	CY	-	CLD	
1	6/17/93	This drawing has been redrawn in CAD and reflects the current as-built condition, DCR 93-664	DME	DME	SKB	DLD	MTP	

PROFESSIONAL ENGINEER:

QUALITY LEVEL: SAFETY RELATED

CAROLINA POWER & LIGHT COMPANY
NUCLEAR ENGINEERING DEPARTMENT

CP&L

PLANT: ROBINSON NUCLEAR PROJECT – UNIT 2

SCALE: NONE

TITLE: INSERVICE INSPECTION DRAWING
REACTOR COOLANT SYSTEM LOOP A
RC-3, RC-6, RC-9
CPL-107

PLANT DWG NO.: HBR2-10618 REV: 3 SHT: 10

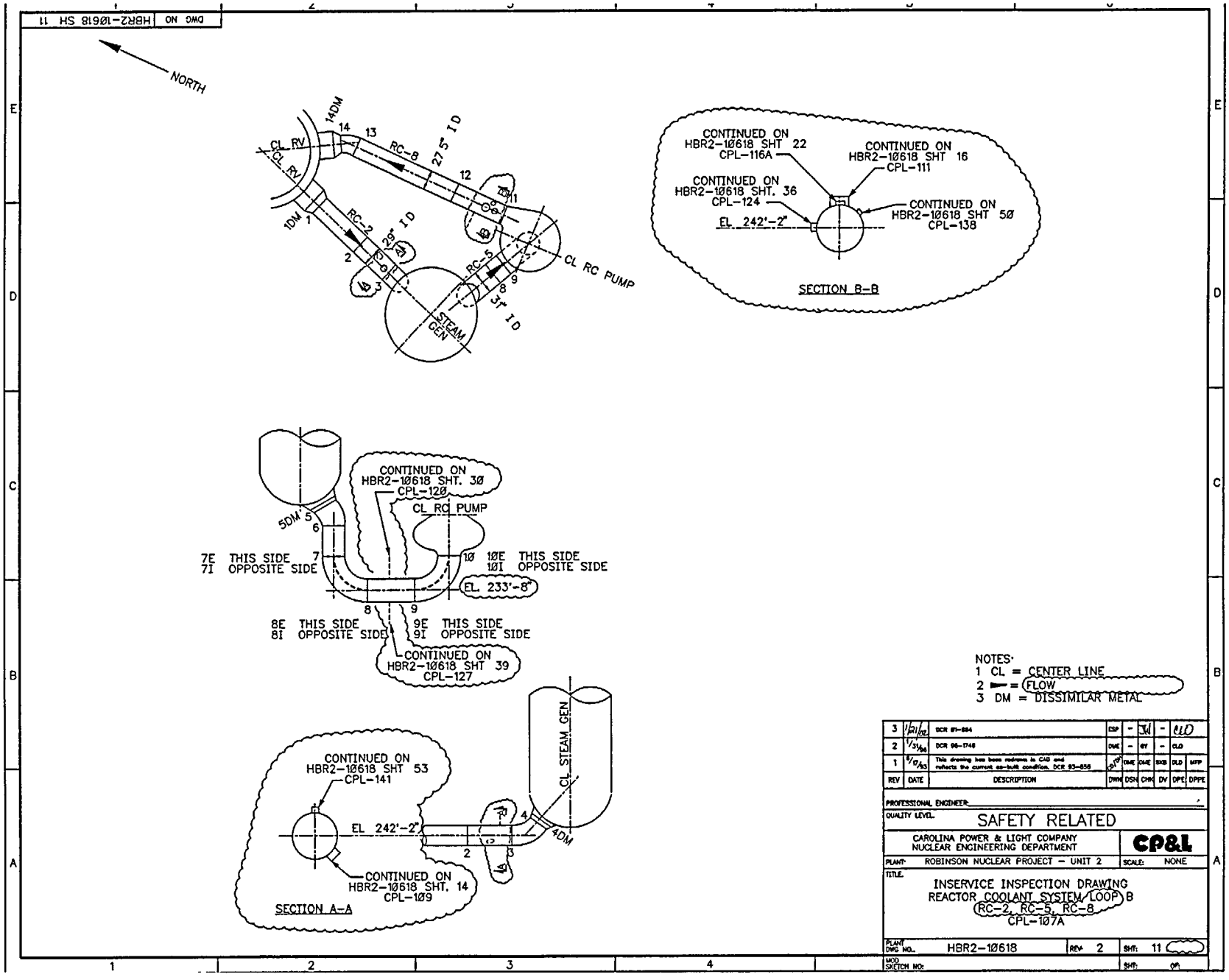
DWG NO HBR2-10618 SH 11
NORTH
CL RV
CL RC
14DM
14
13
RC-8
27.5" I D
12
11
1DM
1
RC-2
29" I D
2
3
RC-5
9
8
31" I D
CL RC PUMP
STEAM GEN
CONTINUED ON HBR2-10618 SHT 22 CPL-116A
CONTINUED ON HBR2-10618 SHT 16 CPL-111
CONTINUED ON HBR2-10618 SHT. 36 CPL-124
CONTINUED ON HBR2-10618 SHT 50 CPL-138
EL 242'-2"
SECTION B-B
CONTINUED ON HBR2-10618 SHT. 30 CPL-120
CL RC PUMP
5DM 5
6
7E THIS SIDE
7I OPPOSITE SIDE
7
10
10E THIS SIDE
10I OPPOSITE SIDE
EL 233'-8"
8
9
8E THIS SIDE
8I OPPOSITE SIDE
9E THIS SIDE
9I OPPOSITE SIDE
CONTINUED ON HBR2-10618 SHT 39 CPL-127
CL STEAM GEN
CONTINUED ON HBR2-10618 SHT 53 CPL-141
EL 242'-2"
4
4DM
2
3
CONTINUED ON HBR2-10618 SHT. 14 CPL-109
SECTION A-A
NOTES:
1 CL = CENTER LINE
2 ► = FLOW
3 DM = DISSIMILAR METAL
3 1/21/02 DCR 97-884 ESP - JM - ELD
2 1/31/96 DCR 96-1748 DME - GY - GLO
1 6/17/93 This drawing has been redrawn in CAD and reflects the current as-built condition. DCR 93-656 DME DME BKB DLD MFP
REV DATE DESCRIPTION DWN DSN CHK DV DPE DPPE
PROFESSIONAL ENGINEER
QUALITY LEVEL SAFETY RELATED
CAROLINA POWER & LIGHT COMPANY
NUCLEAR ENGINEERING DEPARTMENT
CP&L
PLANT: ROBINSON NUCLEAR PROJECT - UNIT 2
SCALE: NONE
TITLE
INSERVICE INSPECTION DRAWING
REACTOR COOLANT SYSTEM LOOP B
RC-2, RC-5, RC-8
CPL-107A
PLANT DWG NO. HBR2-10618
REV 2
SHT: 11
MOD SKETCH NO:
SHT:
OF:

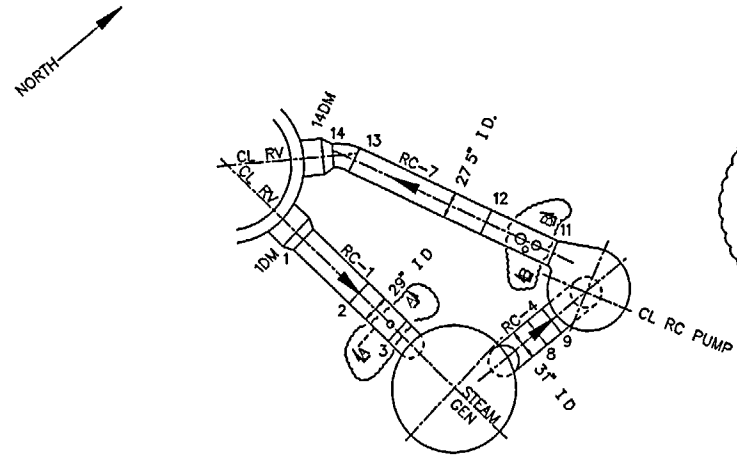

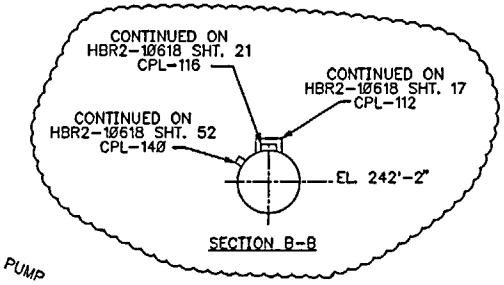

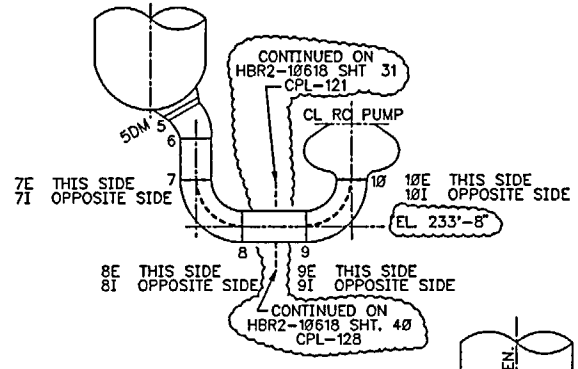

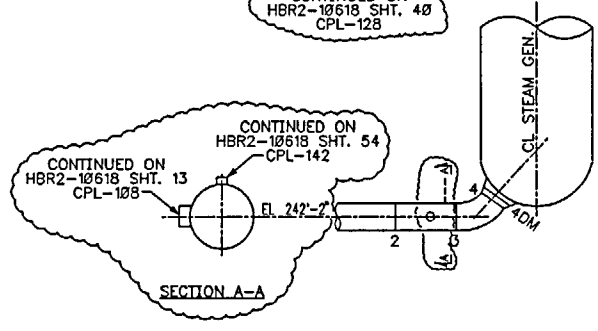

NOTES
1 CL = CENTER LINE
2 ► = FLOW
3. DM = DISSIMILAR METAL

REV	DATE	DESCRIPTION	DWN	DSN	CHK	DV	DPE	DPPE
3	1/21/92	DCR 91-885	ESP	-	JW	-	CLD	
2	1/31/86	DCR 85-1747	DME	-	GY	-	CLD	
1	5/17/83	This drawing has been redrawn in CAD and reflects the current as-built condition, DCR 83-858	GLP/TP	DME	DME	SKB	DLD	MFP

PROFESSIONAL ENGINEER:

QUALITY LEVEL: SAFETY RELATED

CAROLINA POWER & LIGHT COMPANY
NUCLEAR ENGINEERING DEPARTMENT

CP&L

PLANT: ROBINSON NUCLEAR PROJECT — UNIT 2

SCALE: NONE

TITLE:
INSERVICE INSPECTION DRAWING
REACTOR COOLANT SYSTEM LOOP C
RC-1, RC-4, RC-7
CPL-107B

PLANT DWG NO.: HBR2-10618 REV: 3 SHT 12

MOD SKETCH NO.: SHT OF

DWG NO HBR2-10618 SHT 24

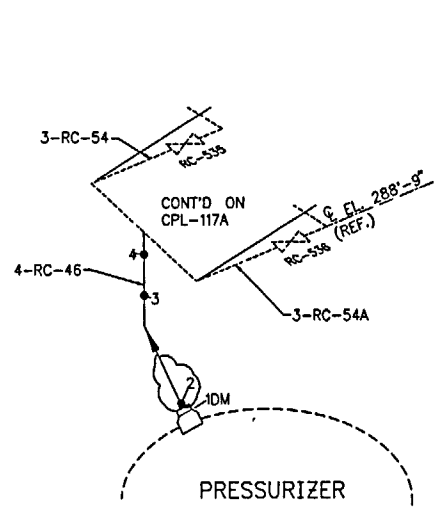

NORTH

PZR CUBICLE

NOTES
1 DM = DISSIMILAR METAL
2 ► = DATUM POINT REFERENCE

REF. DWGS.
G-190270
5379-1971 SHT 2

REV	DATE	DESCRIPTION	DWN	DSN	CHK	DV	DPE	DPPE
2	4/25/91	DCR [illegible]	[illegible]	–	DME	–	–	CLD 4/25/91
1	8/17/83	This drawing has been redrawn in CAD and reflects the current as-built condition.	[illegible] 8/17/83	DME	DME	SKB	DLB	GFP

PROFESSIONAL ENGINEER:

QUALITY LEVEL: SAFETY RELATED

CAROLINA POWER & LIGHT COMPANY
NUCLEAR ENGINEERING DEPARTMENT

CP&L

PLANT: ROBINSON NUCLEAR PROJECT – UNIT 2 | W.A.E.: NONE

TITLE:

4" PRESSURIZER RELIEF LINE
LINE NO 4-RC-46
CPL-117

PLANT DWG NO.: HBR2-10618 | REV: 2 | SHT: 24 OF 164

MOD

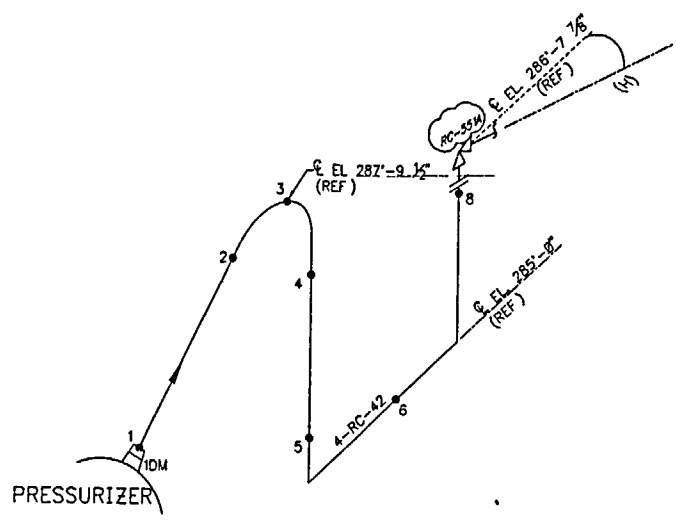

PZR CUBICLE

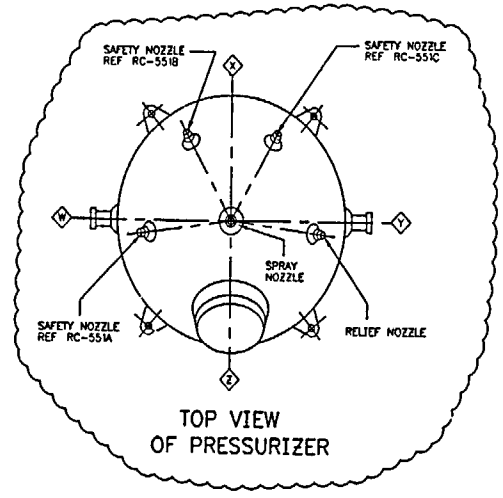

TOP VIEW
OF PRESSURIZER

NOTES
1 DM = DISSIMILAR METAL
2 ⟶ = DATUM POINT REFERENCE

REF DWGS.
C-190270
5379-1971 SHT 2

REV	DATE	DESCRIPTION	DWN	DSN	CHK	DV	DPE	DPPE
3	7/18/95	DCR 95-1755	DMC	-	AT	-	CLO 7/18/95	
2	3/28/94	DCR- 94-244	CY	RDW	JW	-	CLO 3/28/94	
1	5/17/83	This drawing has been redrawn in CAD and reflects the current as-built condition.	CJP	DHE	DHE	DKB	DLB	MFP

PROFESSIONAL ENGINEER:

QUALITY LEVEL: SAFETY RELATED

CAROLINA POWER & LIGHT COMPANY
NUCLEAR ENGINEERING DEPARTMENT

CP&L

PLANT: ROBINSON NUCLEAR PROJECT – UNIT 2

SCALE: NONE

TITLE:

4" PRESSURIZER
SAFETY LINE
LINE NO 4-RC-42
CPL-118

PLANT DWG NO.: HBR2-10618 REV: 3

SHT: 26 OF 164

MOD SKETCH NO:

SHT: OF:

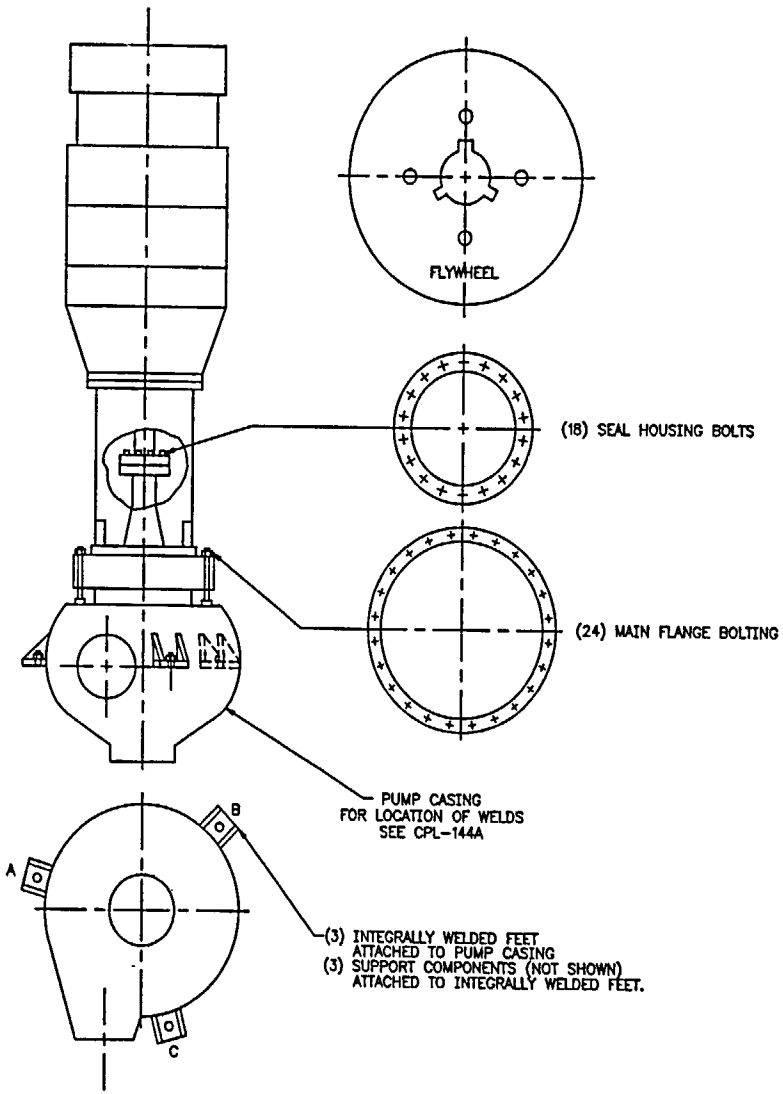

REV	DATE	DESCRIPTION	DRWN	DSGN	CHK	DV	OPE	OPPE
1	12-31-93	This drawing has been redrawn in CAD and reflects the current as-built condition.	RCW	RWE	DHE	SRB	[illegible]	[illegible]

PROFESSIONAL ENGINEER:

QUALITY LEVEL: SAFETY RELATED

CAROLINA POWER & LIGHT COMPANY
NUCLEAR ENGINEERING DEPARTMENT

CP&L

PLANT: ROBINSON NUCLEAR PROJECT – UNIT 2 | SCALE: NONE

TITLE:

REACTOR-COOLANT PUMPS A,B & C

CPL-144

PLANT DWG NO.: HBR2-10618 | REV: 1 | SHT: 056 OF 164

NSA SECTION NO.: | SHT: OF

DWG NO HBR2-10618 SHT. 056

12/31/93

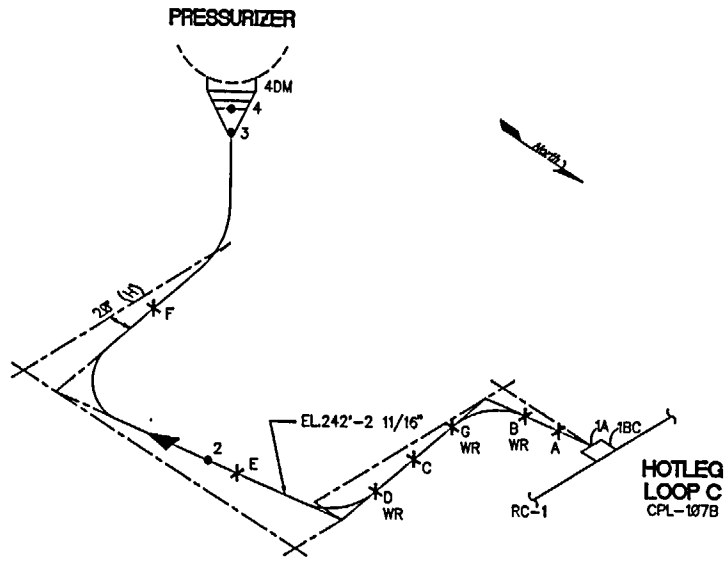

SPRING HANGERS
A,C,E,F

NOTES:
1. BC = BRANCH CONNECTION
2. ⟶ = DATUM POINT REFERENCE
3. WR = WHIP RESTRAINT

REF. DWGS.
G-190269
5379-1971 SHT. 1
SHT. 2

REV	DATE	DESCRIPTION	DWN	DSN	CHK	DV	OPE	OPPE
1	5/31/91	This drawing has been redrawn in CAD and reflects the current as-built condition. TCR 91-857						

PROFESSIONAL ENGINEER:
QUALITY LEVEL: SAFETY RELATED
CAROLINA POWER & LIGHT COMPANY
NUCLEAR ENGINEERING DEPARTMENT
CP&L
PLANT: ROBINSON NUCLEAR PROJECT - UNIT 2
SCALE: NONE
TITLE:
14" & 12" PRESS. SURGE LINE
LINE NO. 12-RC-10
CPL-108
PLANT DWG NO.: HBR2-10618 REV: 1 SHT: 13 OF 164
MOD SKETCH NO: SHT: OF:

DWG NO HBR2-10618 SHT 13

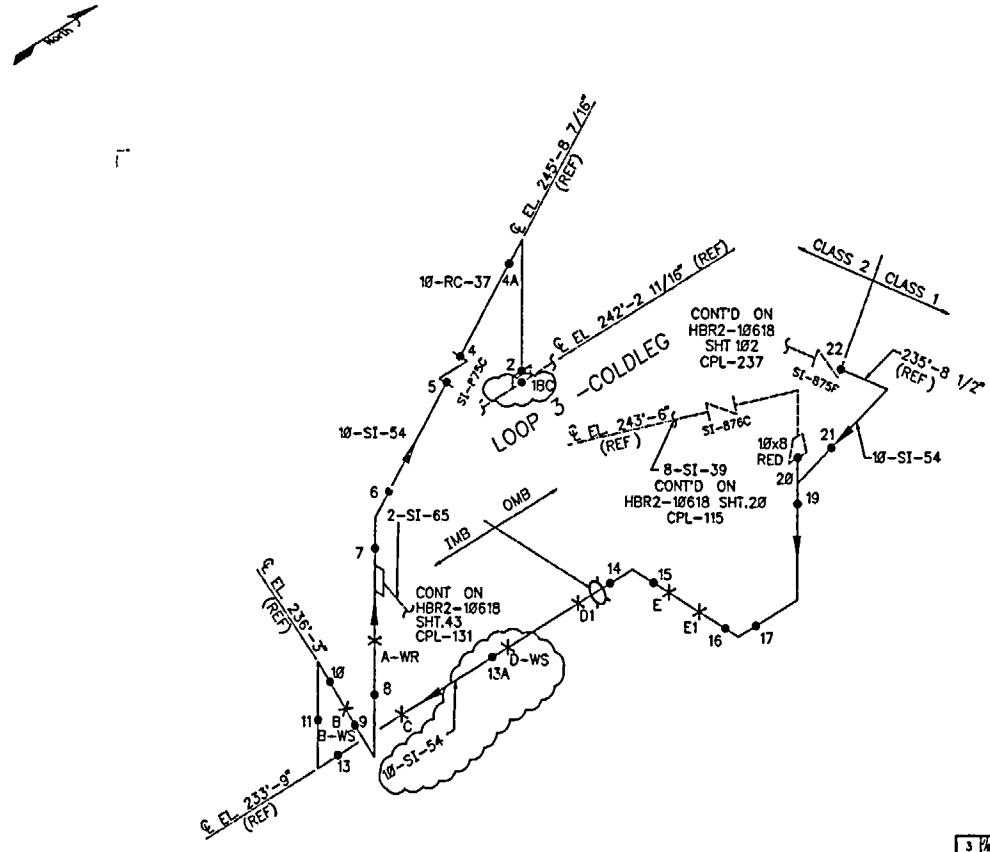

SPRING HANGERS
B,C,D,E

WELDED SUPPORTS
B-WS
D-WS

REF. DWGS.
G-190281
5379-1082 SHT. 4
5379-1971 SHT 1
SK-1164-C-1011

NOTES:
1 ►— DATUM POINT REFERENCE
2 BC = BRANCH CONNECTION
3. WR = WHIP RESTRAINT
4 IMB = INSIDE MISSILE BARRIER
5 OMB = OUTSIDE MISSILE BARRIER

REV	DATE	DESCRIPTION	DWN	DSN	CHK	DV	DPE	DPPE
3	7/21/96	PER DCR 95-1754	BME	-	bY	-	3/29/97	RIC
2	9/26/94	PER DCR 95-1656, PM-1164	JLW	-	RAL	-	JAH	
1	3/8/94	This drawing has been redrawn in CAD and reflects the current as-built condition.	3/8/94	BME	BME	SRB	RJW	MOC

PROFESSIONAL ENGINEER:

QUALITY LEVEL: SAFETY RELATED

CAROLINA POWER & LIGHT COMPANY
NUCLEAR ENGINEERING DEPARTMENT

CP&L

PLANT: ROBINSON NUCLEAR PROJECT – UNIT 2 SCALE: NONE

TITLE:
INSERVICE INSPECTION DRAWING
LOOP 3 10" ACCUM DISCHARGE LINE
LINE NOS. 10-SI-54 AND 10-RC-37
CPL-112

PLANT DWG NO.: HBR2-10618 REV: 3 SHT: 17 OF 164

MOD SKETCH NO.: SHT: OF:

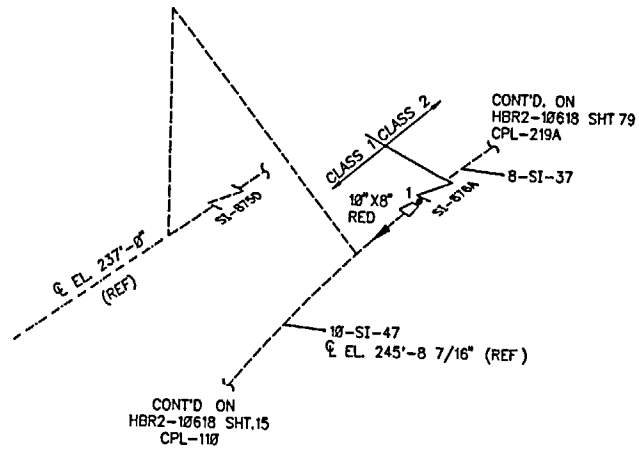

CONTAINMENT BLDG - OUTSIDE
MISSLE BARRIER

REF. DWGS.
G-190282
G-190267
5379-1082 SHT 4
SK-1164-C-1011

NOTES
1 ⟶ DATUM POINT REFERENCE

REV	DATE	DESCRIPTION	DWN	DSN	CHK	DV	OPE	OPPE
2	7/21/95	PER DCR 95-1657, PM-1164	JLW	-	RJJ	TMH	7/20/95	
1	7/10/95	This drawing has been redrawn in CAD and outside the current as-built condition.	JLW	DME	DME	SHB	RJW	MDC

PROFESSIONAL ENGINEER:

QUALITY LEVEL: SAFETY RELATED

CAROLINA POWER & LIGHT COMPANY
NUCLEAR ENGINEERING DEPARTMENT

CP&L

PLANT: ROBINSON NUCLEAR PROJECT - UNIT 2

SCALE: NONE

TITLE:

INSERVICE INSPECTION DRAWING
LOOP 1 - 8" RHR RETURN
LINE NO 8-SI-37
CPL-113

PLANT DWG NO.: HBR2-10618 REV 2 SHT 18 OF 164

NOD SKETCH NO:

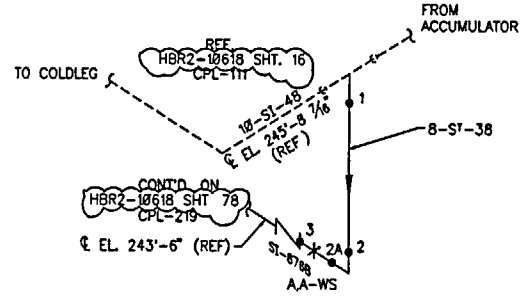

WELDED SUPPORT
A-WS

North

OUTSIDE MISSILE
SHIELD WALL

NOTES:
1 ⟶ DATUM POINT REFERENCE

REF. DWGS.
G-190282
G-190267
5379-1082 SHT. 4
SK-1164-C-1011

REV	DATE	DESCRIPTION	DWN	DSN	CHK	DV	DPC	DPPC
2	11/2/95	PER DCR 95-1658, PM-1164	JLN	-	RGB	TPM	11/2/95	
1	4/17/93	This drawing has been redrawn in CAD and reflects the current as-built condition. DCR 93-859	JLN	DME	DME	DHB	DLB	MPP

PROFESSIONAL ENGINEER:

QUALITY LEVEL: SAFETY RELATED

CAROLINA POWER & LIGHT COMPANY
NUCLEAR ENGINEERING DEPARTMENT

CP&L

PLANT: ROBINSON NUCLEAR PROJECT - UNIT 2

SCALE: NONE

TITLE: INSERVICE INSPECTION DRAWING
LOOP B - 8
RHR RETURN
LINE NO 8-SI-38
CPL-114

PLANT DWG NO.: HBR2-10618 REV: 2 SHT: 19 OF: 164

MOD SKETCH NO: SHT: OF:

DWG NO HBR2-10618 SHT 20

SPRING HANGERS
B

WELDED SUPPORT
B-WS

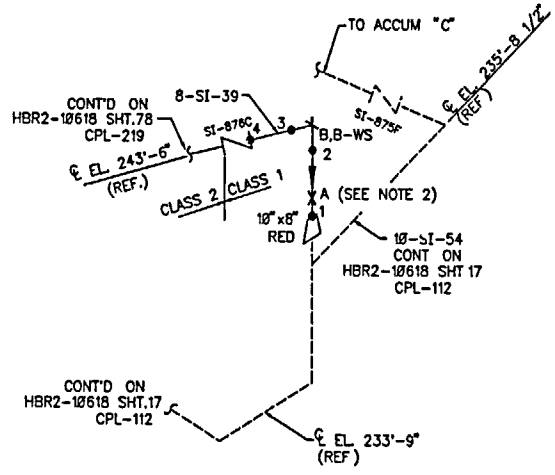

REF. DWGS.
G-190267
5379-1082 SHT. 4
SK-1164-C-1011

NOTES
1 ▶ DATUM POINT REFERENCE
2. "A" IS NO LONGER A SUPPORT RESTRAINT PER M-1164.

REV	DATE	DESCRIPTION	DWN	DSN	CHK	DV	DPC	DPPE
3	11/6/95	PER DCR 95-1659, PM-1164	JLH	–	DM	JMM	11/6/95	
2	9/23/95	DCR 95-1056	CMS	–	JLH	–	CLD 9/23/95	
1	2/10/94	This drawing has been redrawn in CAD and reflects the current as-built condition.	JLH	CMS	CMS	RMB	RJW	MOD

PROFESSIONAL ENGINEER:

QUALITY LEVEL: SAFETY RELATED

CAROLINA POWER & LIGHT COMPANY
NUCLEAR ENGINEERING DEPARTMENT

CP&L

PLANT: ROBINSON NUCLEAR PROJECT – UNIT 2 SCALE: NONE

TITLE:
INSERVICE INSPECTION DRAWING
LOOP 3 – 8" RHR RETURN
LINE NO 8-SI-39
CPL-115

PLANT DWG NO. HBR2-10618 REV. 3 SHT. 20 OF 164

MOD SECTION NO: SHT: (P)

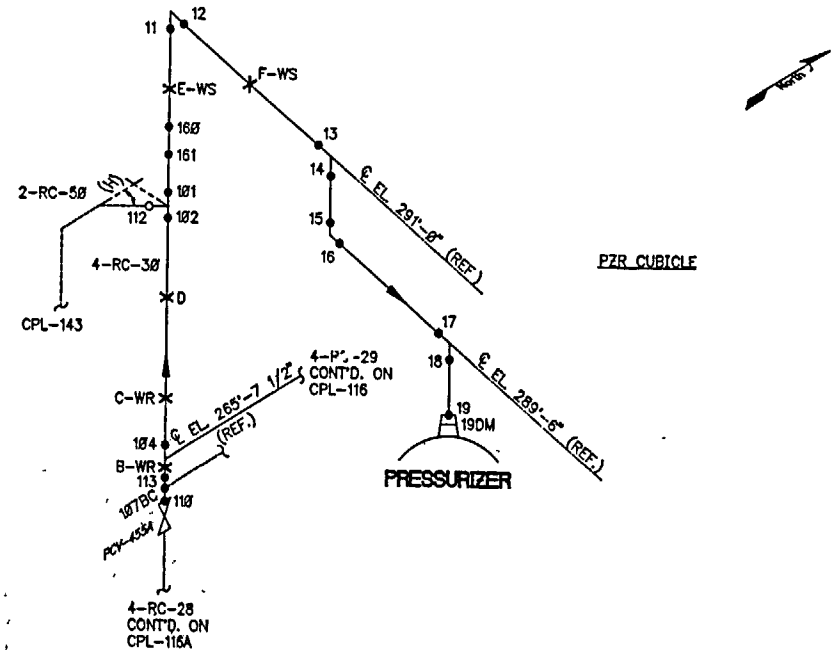

NOTES.
1. DM = DISSIMILAR METAL
2. ⟶ = DATUM POINT REFERENCE
3. WR = WHIP RESTRAINT

REF. DWGS.
G-19Ø27Ø
5379-1971 SHT. 2

REV	DATE	DESCRIPTION	DWN	DSN	CHK	DV	DPE	DPPE
1	5/5/91	This drawing has been redrawn in CAD and reflects the current as-built condition. DCR 91 860						

PROFESSIONAL ENGINEER:
QUALITY LEVEL: SAFETY RELATED
CAROLINA POWER & LIGHT COMPANY
NUCLEAR ENGINEERING DEPARTMENT
CP&L
PLANT: ROBINSON NUCLEAR PROJECT - UNIT 2
SCALE: NONE
TITLE:
LOOPS B&C - 4"
SPRAY LINE
LINE NO. 4-RC-3Ø
CPL-116B
PLANT DWG NO.: HBR2-1Ø618
REV: 1
SHT: 23 OF 164
MOD

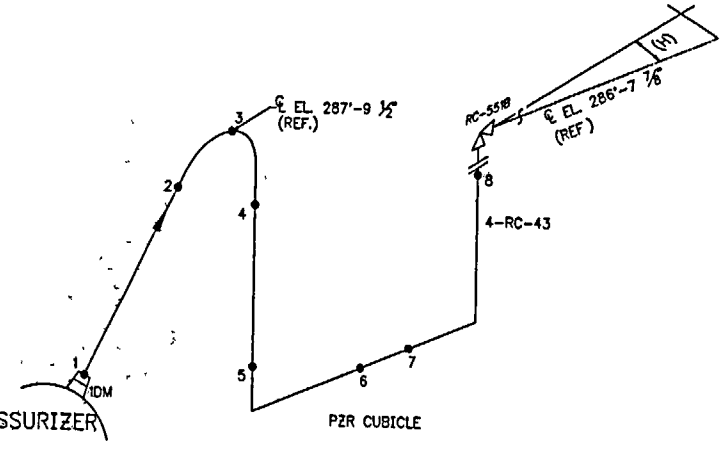

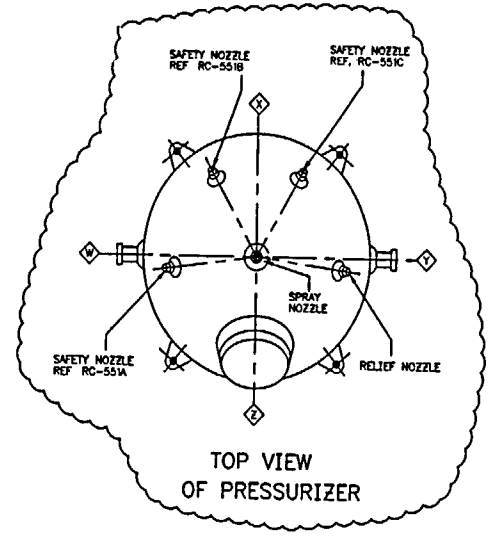

TOP VIEW
OF PRESSURIZER

NOTES
1 DM = DISSIMILAR METAL
2. ▬ = DATUM POINT REFERENCE

REF. DWGS.
G-190270
5379-1971 SHT. 2

REV	DATE	DESCRIPTION	DRN	DSN	CHK	DV	DPE	DPPE
2	7/29/96	SCR 88-1758	DME	–	GY	–	8/16/96	
1	6/10/93	This drawing has been redrawn in CAD and reflects the current as-built condition, PAL 12-29-93	GY	DME	DME	WHB	DLD	MPP

PROFESSIONAL ENGINEER:

QUALITY LEVEL: SAFETY RELATED

CAROLINA POWER & LIGHT COMPANY
NUCLEAR ENGINEERING DEPARTMENT

CP&L

PLANT: ROBINSON NUCLEAR PROJECT – UNIT 2

SCALE: NONE

TITLE:
INSERVICE INSPECTION DRAWING
4" PRESSURIZER SAFETY LINE
LINE NO. 4-RC-43
CPL-118A

PLANT DWG NO.: HBR2-10618 REV: 2 SHT: 27 OF: 164

DWG NO HBR2-10618 SHT 28

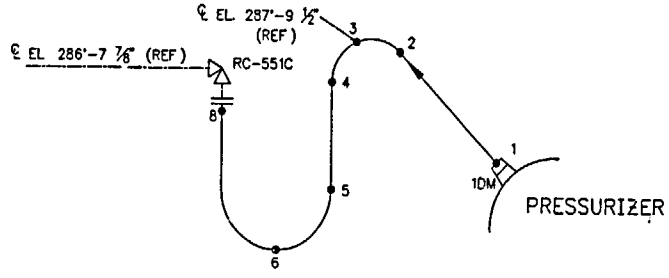

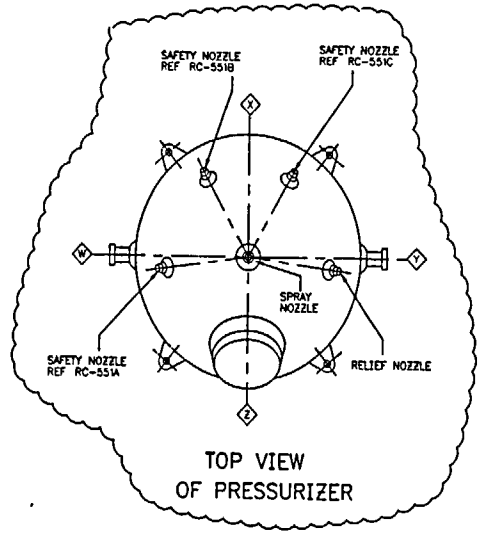

TOP VIEW
OF PRESSURIZER

NOTES
1 DM = DISSIMILAR METAL
2 ►— = DATUM POINT REFERENCE

REF DWGS
G-190270
5379-1971 SHT. 2

REV	DATE	DESCRIPTION	DWN	DSN	CHK	DV	DPE	DPPE
3	7/11/96	DCR 95-1757	DMC	–	6-7	–	OLD 1/8/96	
2	7/29/94	DCR 94-243	CY	REW	JW	–	OLD	
1	6/10/93	This drawing has been redrawn in CAD and reflects the current as-built condition.	CY	DME	DME	SKB	OLB	MPP

PROFESSIONAL ENGINEER:

QUALITY LEVEL: SAFETY RELATED

CAROLINA POWER & LIGHT COMPANY
NUCLEAR ENGINEERING DEPARTMENT

CP&L

PLANT: ROBINSON NUCLEAR PROJECT – UNIT 2

SCALE: NONE

TITLE:
INSERVICE INSPECTION DRAWING
4" PRESSURIZER SAFETY LINE
LINE NO 4-RC-45
CPL-118B

PLANT DWG NO.: HBR2-10618 REV 3 SHT 28 OF 164

MOD SKETCH NO: SHT: OF:

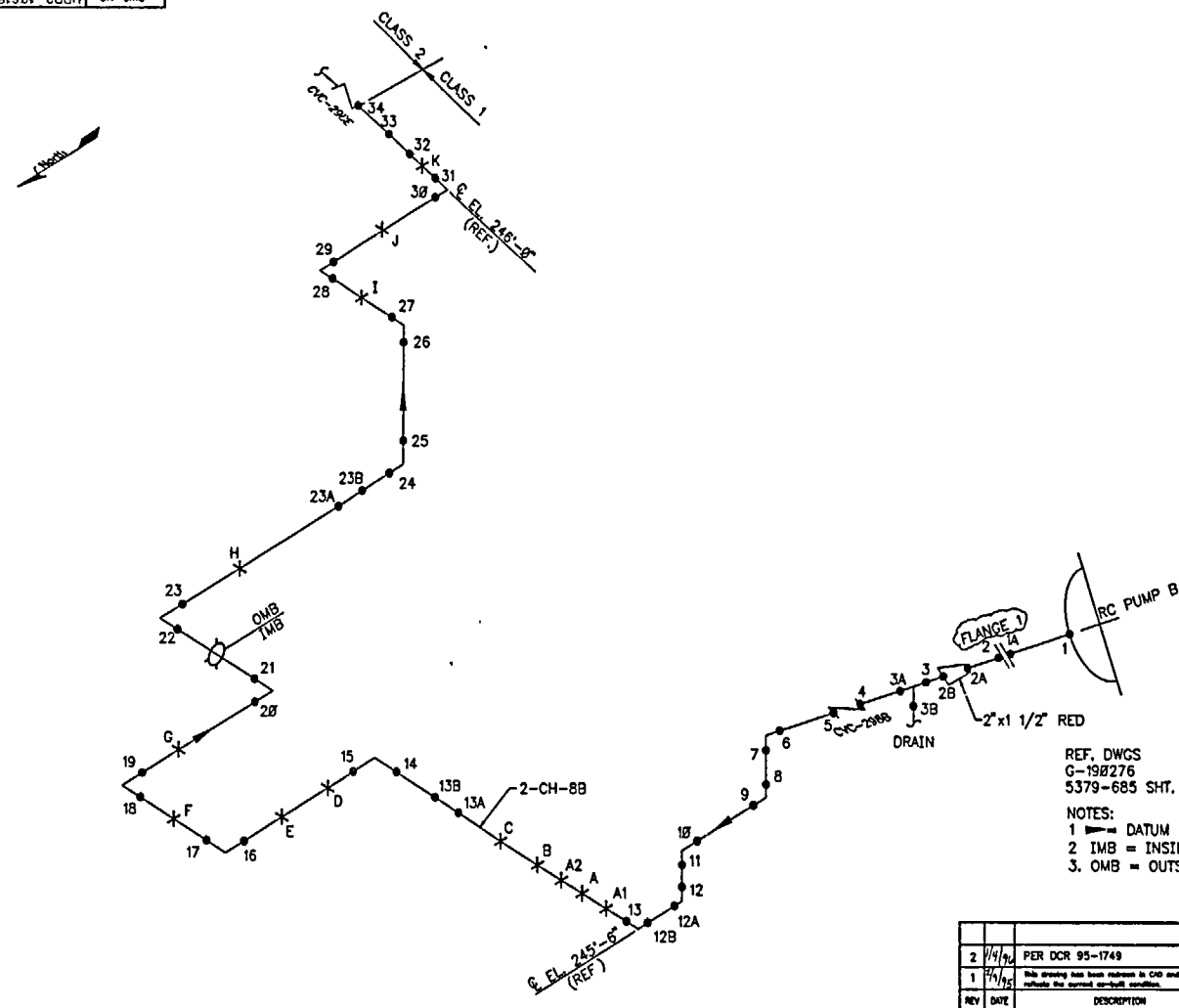

REF. DWGS
G-190276
5379-685 SHT. 1

NOTES:
1 ⟶ DATUM POINT REFERENCE
2 IMB = INSIDE MISSILE BARRIER
3. OMB = OUTSIDE MISSILE BARRIER

REV	DATE	DESCRIPTION	DWN	DSN	CHK	DV	DPE	DPPE
2	7/4/96	PER DCR 95-1749	JLW	–	RM	–	CLO 7/4/96	
1	7/1/95	This drawing has been redrawn in CAD and reflects the current as-built condition.	JLW	DME	DME	SKB	RJW	MOC

PROFESSIONAL ENGINEER

QUALITY LEVEL: SAFETY RELATED

CAROLINA POWER & LIGHT COMPANY
NUCLEAR ENGINEERING DEPARTMENT

CP&L

PLANT: ROBINSON NUCLEAR PROJECT – UNIT 2

SCALE: NONE

TITLE:
INSERVICE INSPECTION DRAWING
LOOP 2 – 2" SEAL INJECT. LINE
LINE NO 2-CH-8B
CPL-133

PLANT DWG NO. HBR2-10618 REV 2 SHT 45 OF 164

DWG NO HBR2-10618 SHT 45

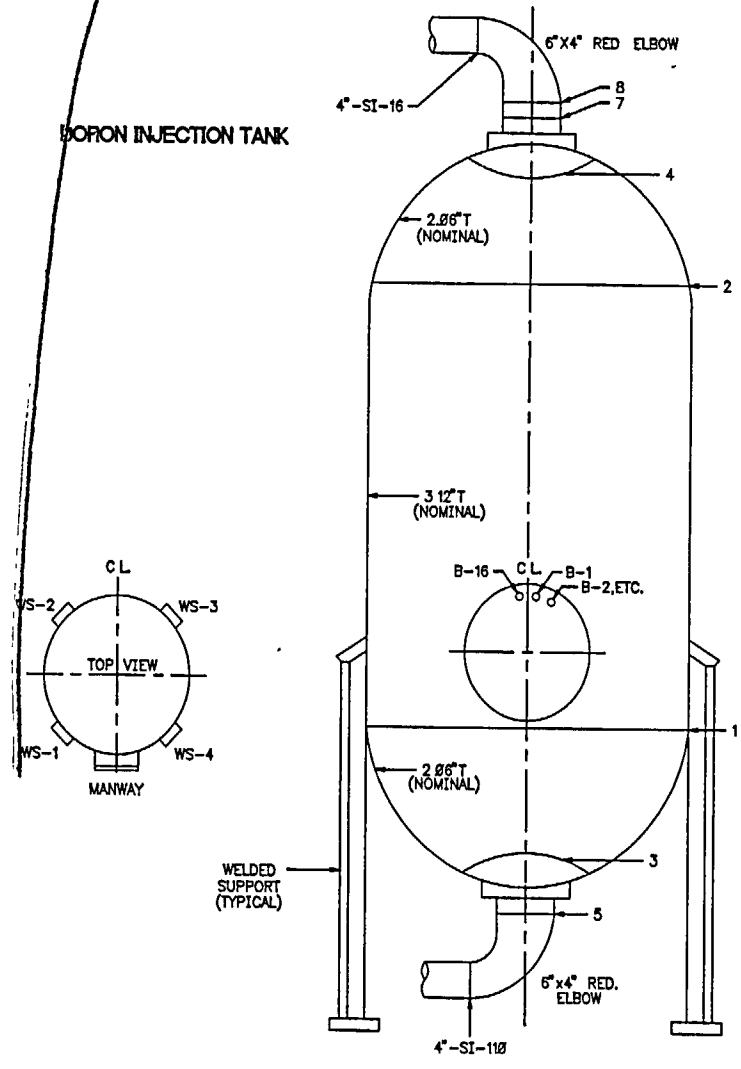

REV	DATE	DESCRIPTION	DRN	DSN	CHK	IV	DPE	DPPE
1	10/18/94	This drawing has been redrawn in CAD and reflects the current as-built condition.						

PROFESSIONAL ENGINEER:

QUALITY LEVEL: SAFETY RELATED

CAROLINA POWER & LIGHT COMPANY
NUCLEAR ENGINEERING DEPARTMENT

CP&L

PLANT: ROBINSON NUCLEAR PROJECT – UNIT 2

SCALE: NONE

TITLE:

BORON INJECTION TANK

CPL-202

PLANT DWG NO.: HBR2-10618 REV: 1

SHT 058 OF 164

NOZ SKETCH NO.:

SHT: OF

DWG. NO HBR2-10618 SHT. 058

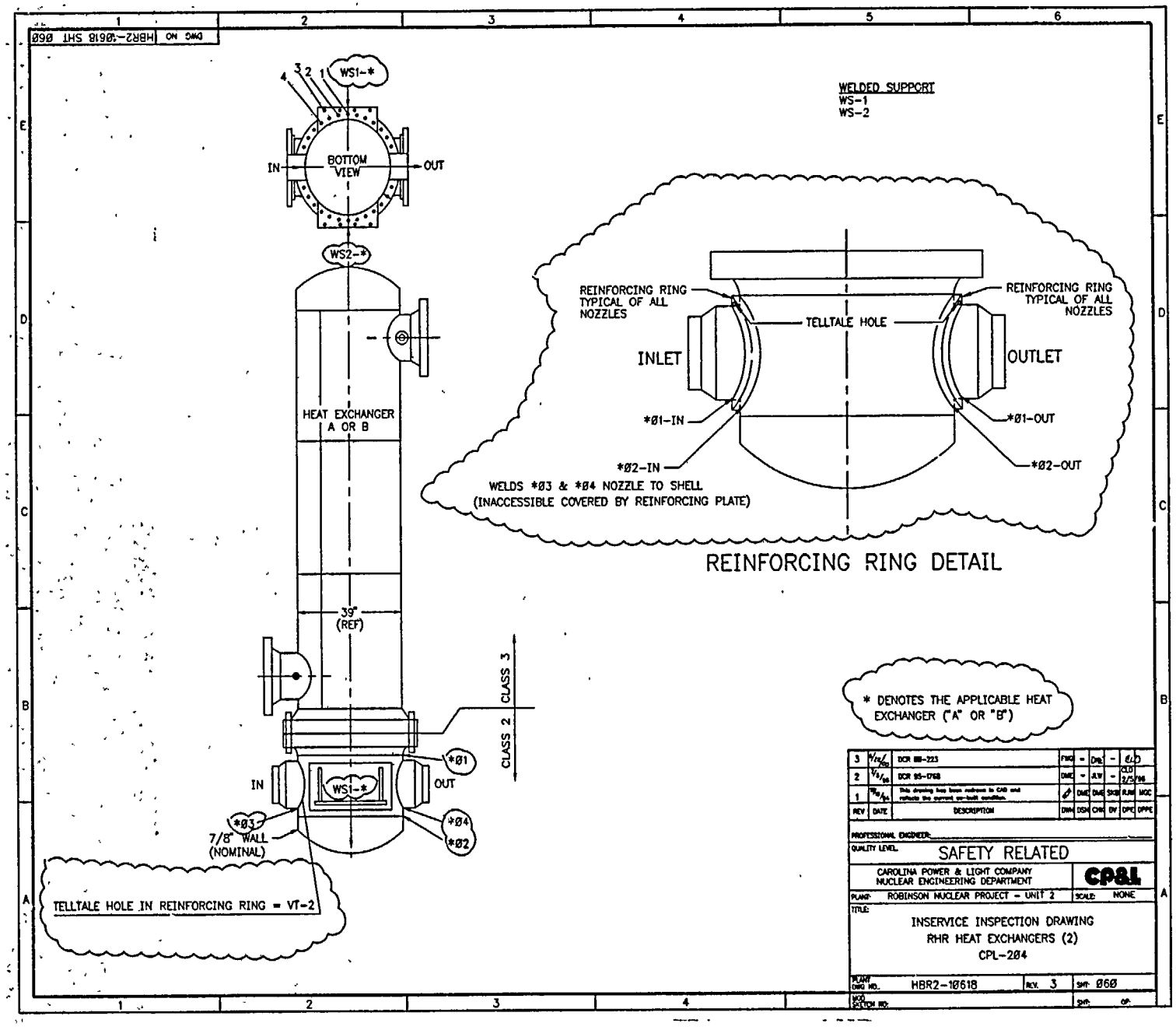
DWG NO HBR2-10618 SHT 060
WS1-*
4 3 2 1
BOTTOM VIEW
IN
OUT
WS2-*
HEAT EXCHANGER A OR B
39" (REF)
CLASS 3
CLASS 2
*Ø1
IN
WS1-*
OUT
*Ø3
*Ø4
*Ø2
7/8" WALL (NOMINAL)
TELLTALE HOLE IN REINFORCING RING = VT-2
WELDED SUPPORT
WS-1
WS-2
REINFORCING RING TYPICAL OF ALL NOZZLES
TELLTALE HOLE
REINFORCING RING TYPICAL OF ALL NOZZLES
INLET
OUTLET
*Ø1-IN
*Ø1-OUT
*Ø2-IN
*Ø2-OUT
WELDS *Ø3 & *Ø4 NOZZLE TO SHELL
(INACCESSIBLE COVERED BY REINFORCING PLATE)
REINFORCING RING DETAIL
* DENOTES THE APPLICABLE HEAT EXCHANGER ("A" OR "B")
3 DCR 88-223
2 DCR 95-1768
1 This drawing has been redrawn in CAD and reflects the current as-built condition.
REV DATE DESCRIPTION
PROFESSIONAL ENGINEER:
QUALITY LEVEL: SAFETY RELATED
CAROLINA POWER & LIGHT COMPANY
NUCLEAR ENGINEERING DEPARTMENT
CP&L
PLANT: ROBINSON NUCLEAR PROJECT - UNIT 2
SCALE: NONE
TITLE:
INSERVICE INSPECTION DRAWING
RHR HEAT EXCHANGERS (2)
CPL-204
PLANT DWG NO. HBR2-10618
REV. 3
SHT. 060
MOD. SKETCH NO.
SHT. OF

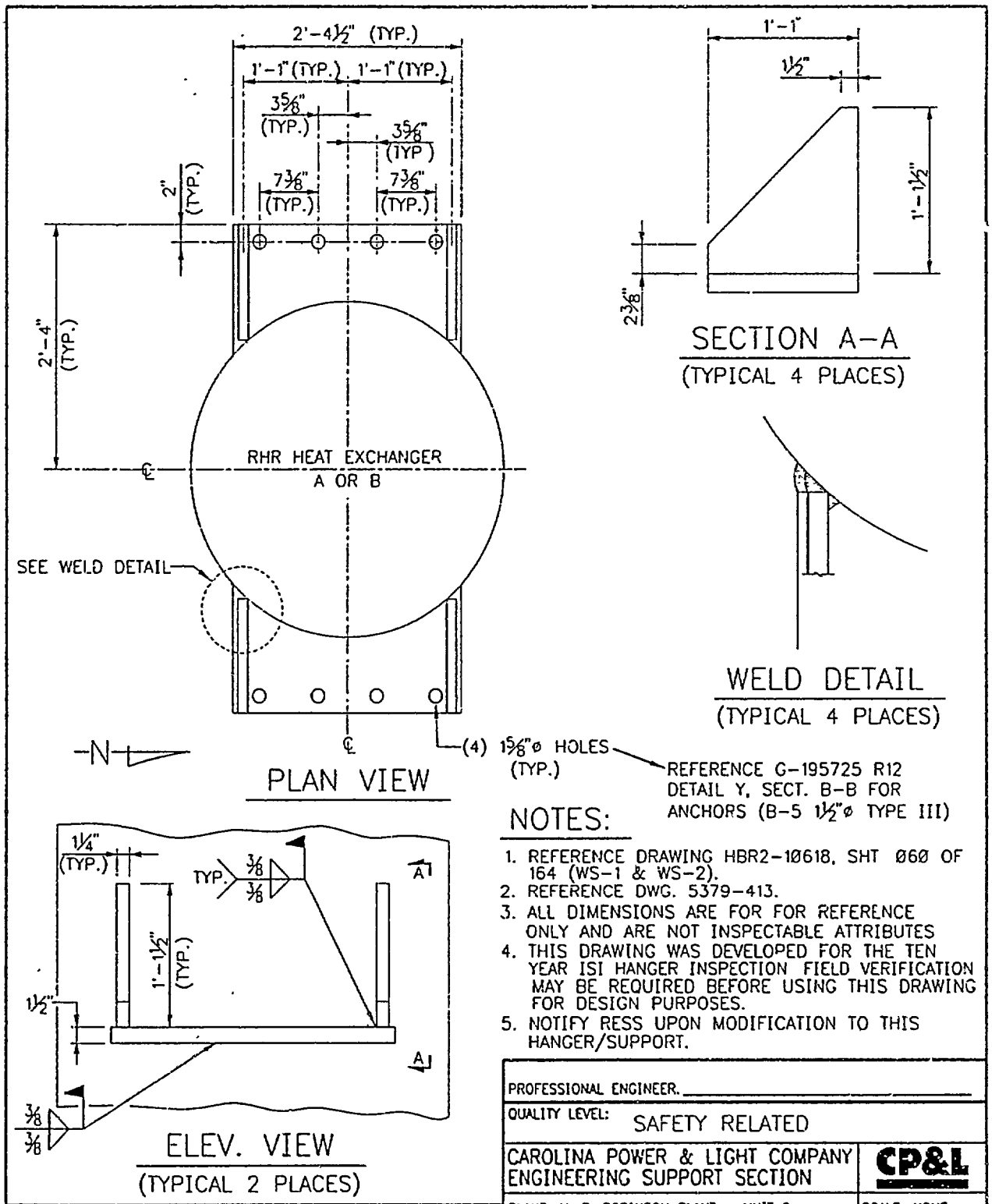

NOTES:

1. REFERENCE DRAWING HBR2-10618, SHT 060 OF 164 (WS-1 & WS-2).
2. REFERENCE DWG. 5379-413.
3. ALL DIMENSIONS ARE FOR FOR REFERENCE ONLY AND ARE NOT INSPECTABLE ATTRIBUTES
4. THIS DRAWING WAS DEVELOPED FOR THE TEN YEAR ISI HANGER INSPECTION FIELD VERIFICATION MAY BE REQUIRED BEFORE USING THIS DRAWING FOR DESIGN PURPOSES.
5. NOTIFY RESS UPON MODIFICATION TO THIS HANGER/SUPPORT.

REV	DATE	DESCRIPTION	DWN	CHK	APPR'D
0	[illegible]	ISSUED FOR ESR 95-01079	TWS	[illegible]	[illegible]

FILE: HBR2-10618 SHT 060A

PROFESSIONAL ENGINEER. _____

QUALITY LEVEL: SAFETY RELATED

CAROLINA POWER & LIGHT COMPANY
ENGINEERING SUPPORT SECTION

CP&L

PLANT: H. B ROBINSON PLANT - UNIT 2 | SCALE: NONE

TITLE: RX AUX BLDG. - FLOOR EL. 226'-0"
RHR HEAT EXCHANGERS A & B
TYPICAL WS-1 & WS-2 SUPPORT DETAIL

PLANT DWG NO HBR2-10618 | REV 0 | SHT 060A

MOD SKETCH NO. (ISI) CPL-204 | SHT 1 OF 1

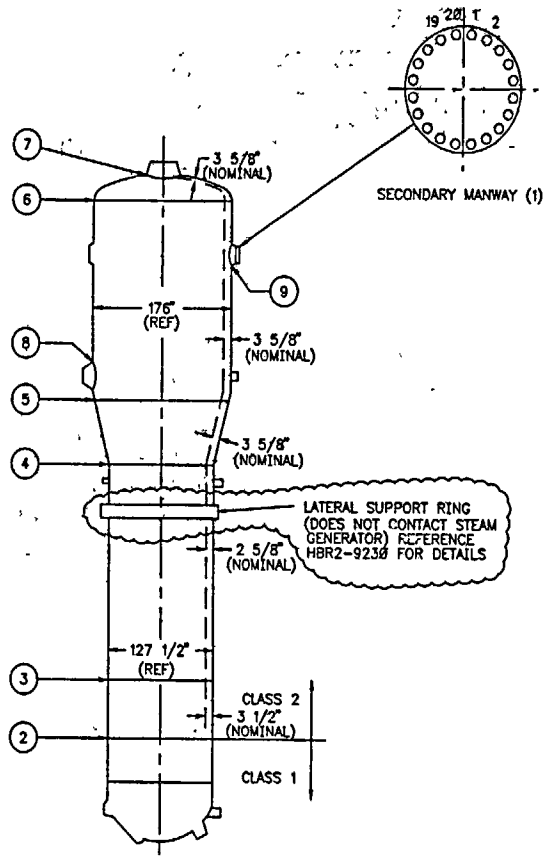

REV	DATE	DESCRIPTION	DWN	DSN	CHK	DV	DPE	DPPE
2	7/26/96	DCR 95-1769	DME	—	JP	—	4/20/96	7/96
1	10/6/94	This drawing has been redrawn in CAD and reflects the current as-built condition.		DME	DME	SKB	RJH	MCC

PROFESSIONAL ENGINEER:

QUALITY LEVEL: SAFETY RELATED

CAROLINA POWER & LIGHT COMPANY
NUCLEAR ENGINEERING DEPARTMENT

CP&L

PLANT: ROBINSON NUCLEAR PROJECT – UNIT 2

SCALE: NONE

TITLE:

INSERVICE INSPECTION DRAWING
STEAM GENERATOR A
CPL-285

PLANT DWG NO.: HBR2-10618 REV: 2 SHT: 061 OF 164

MOD. SECTION NO.: SHT: OF:

DWG NO HBR2-10618 SH. 061

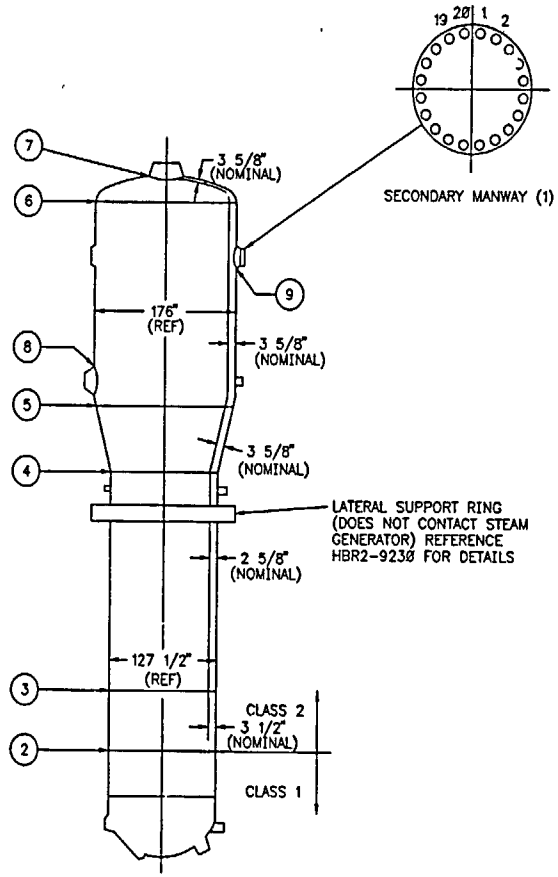

REF DWGS:
HBR2-9230
HBR2-10495
5379-2678
5379-2674
5379-2952

REV	DATE	DESCRIPTION	DRW	DSN	CHK	DV	DPE	DPPE
2	7/16/98	DCN 98-181 CSR 98-0060		-		-	GV	—
1	1/10/95	This drawing has been redrawn in CAD and reflects the current as-built condition.						

PROFESSIONAL ENGINEER:

QUALITY LEVEL: SAFETY RELATED

CAROLINA POWER & LIGHT COMPANY
NUCLEAR ENGINEERING DEPARTMENT

CP&L

PLANT: ROBINSON NUCLEAR PROJECT – UNIT 2 SCALE: NONE

TITLE:

STEAM GENERATOR B

CPL-205A

PLANT DWG NO.: HBR2-10618 REV: 2 SHT: 062 OF: 164

MOD SKETCH NO.: SHT: OF:

DWG NO. HBR2-10618 SHT. 062

AF 16245

CPL-212/A-WS

N/A

BASE PLATE IDENTIFICATION

Y, N, Z, X

$F_x = 46020$ (30228) lbs

$F_y =$ —— lbs (——)

$F_z = 47704$ (18899) lbs

LOAD CASE THRM+D+OBE (THRM+D+DBE)

EBASCO CMPTR RUN

DATE: 8-6-84 TIME: 8:53AM

RESTRAINT LOADS

RESTRAINT LOCATION:
SEE ISO NO. MS-1A
PT NO. 1023 (1023)

REACTOR BLDG
N-E SIDE OF
STEAM GEN A

REST CALC NO MS-1A-1023

MOD NO M492, REV 3

P.M.R. NO 12

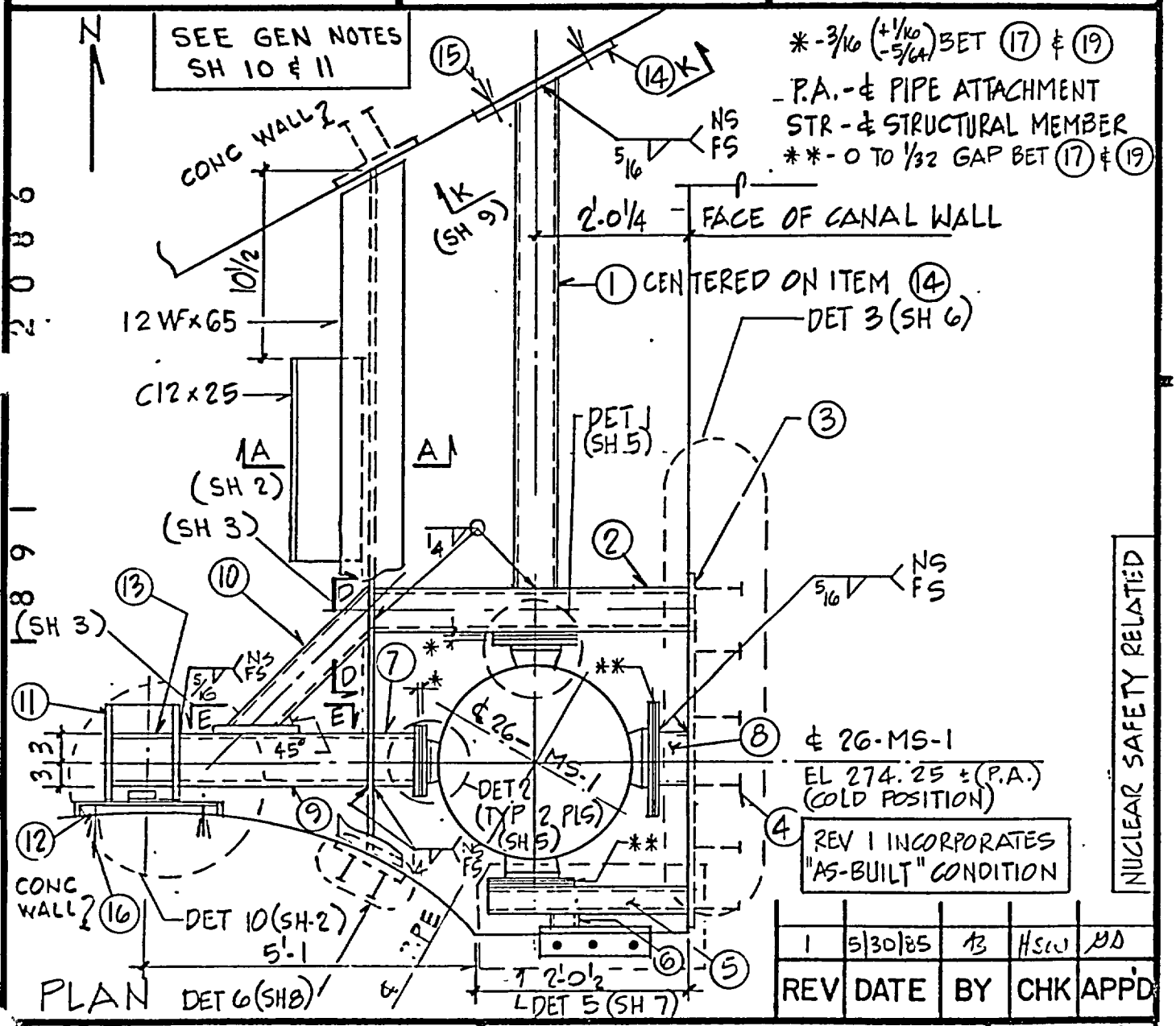

REV	DATE	BY	CHK	APP'D
1	5/30/85	AB	HSW	BD

EBASCO SERVICES INCORPORATED

DIV. CIVIL DR. AB
DATE 7/14/84 CH. RS
SCALE NTS

APPROVED

H.B. ROBINSON – UNIT 2
AS-BUILT RESTRAINT SKETCH
SYSTEM: MAIN STEAM
ISO NO./POINT NO. MS-1A/1023

AB-CAR-MS-1A-1023

SH. 1 OF 1-1

56

AF 16245

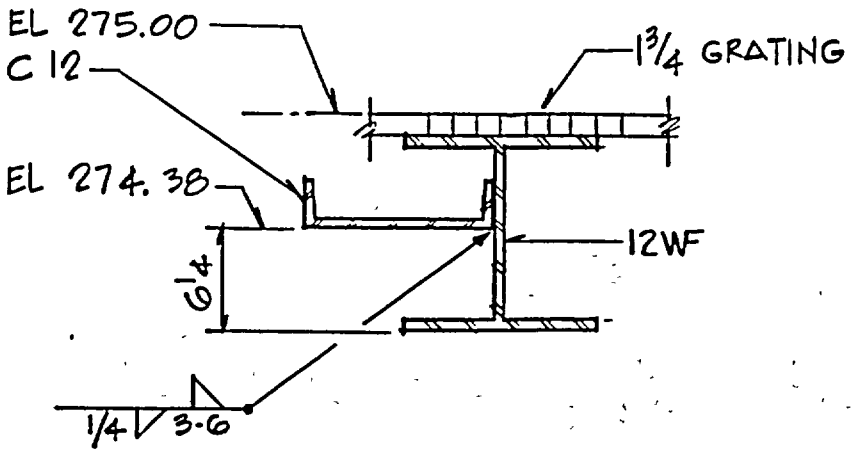

SECT A (SH 1)

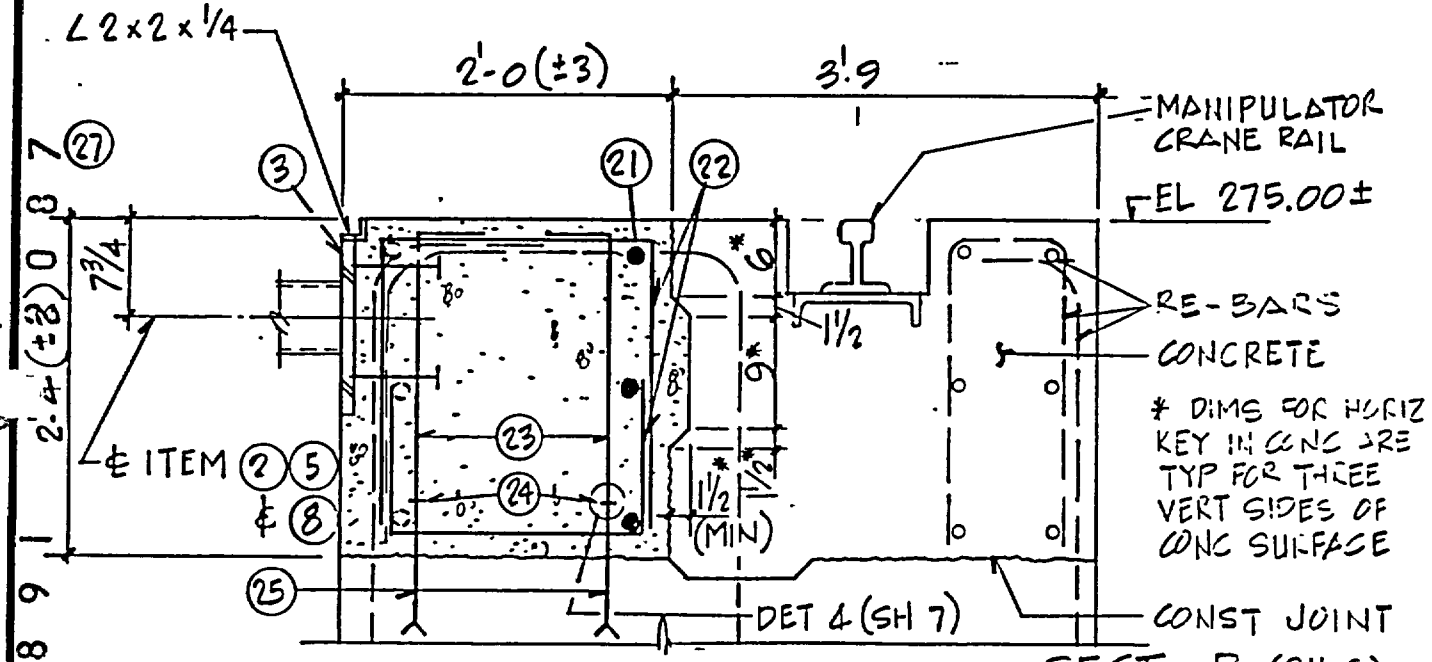

SECT B (SH. 6)

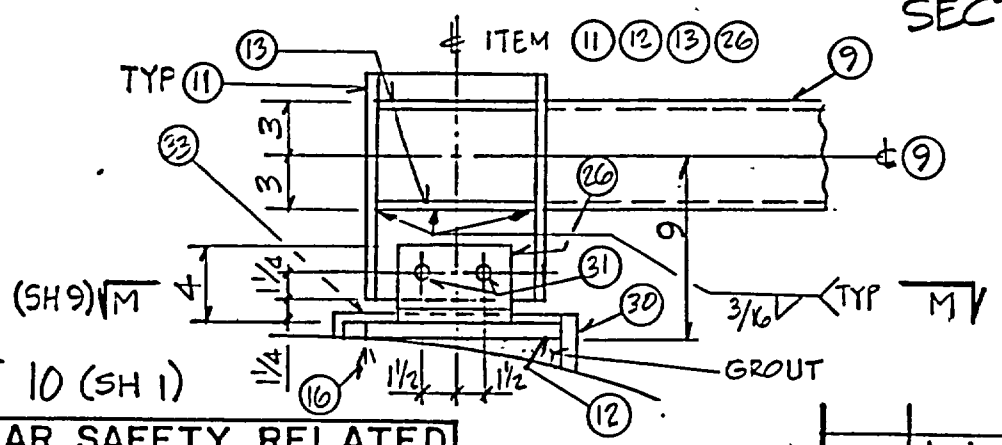

DET 10 (SH 1)

NUCLEAR SAFETY RELATED

REV	DATE	BY	CHK	APP'D
1.	5/30/85		HSW	

EBASCO SERVICES INCORPORATED

DIV. CIVIL DR. DATE 2/14/84 CH. SCALE NTS

APPROVED

H.B. ROBINSON – UNIT 2
AS-BUILT RESTRAINT SKETCH
SYSTEM: MAIN STEAM
ISO NO./POINT NO. MS-1A/1023

AE-CAR MS-1A-1023

SH. 2 OF 14

AF 16245

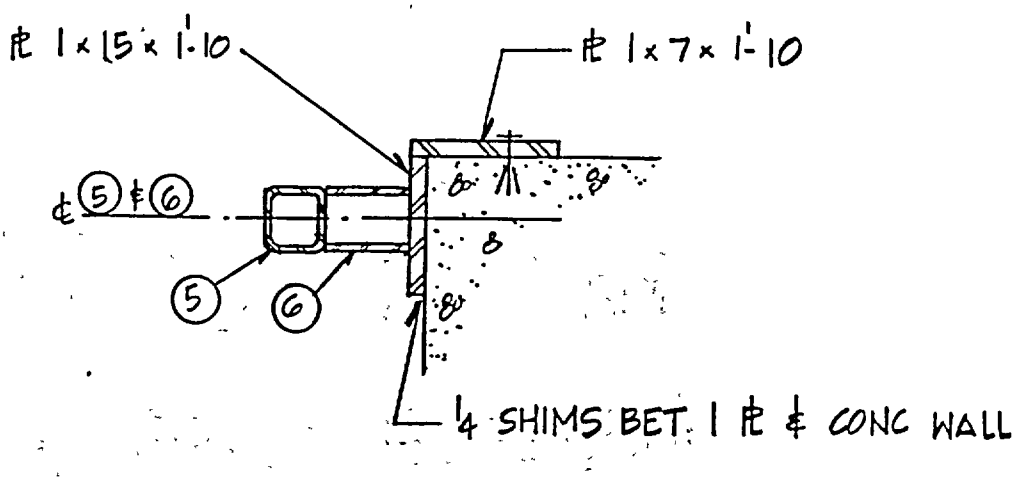

SECT C (SH 7)

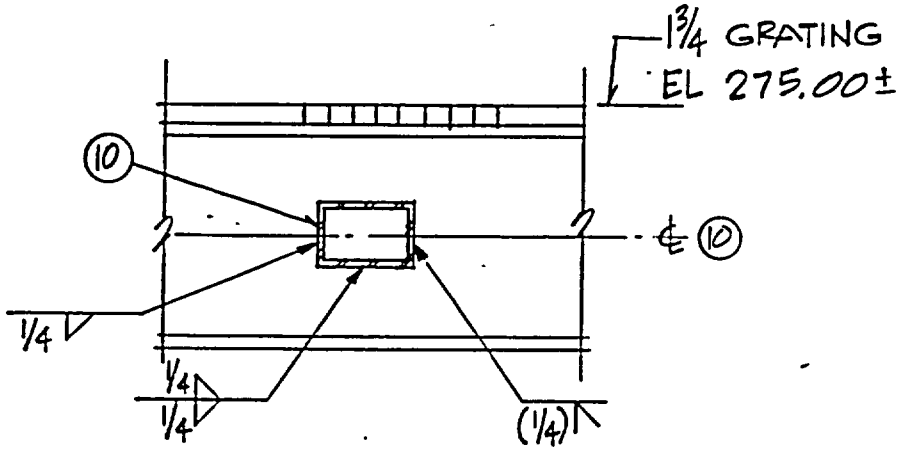

SECT D (SH 1)

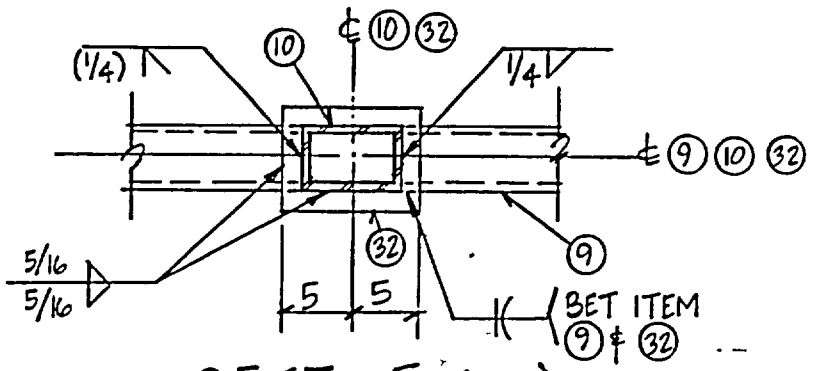

SECT E (SH 1)

NUCLEAR SAFETY RELATED

REV	DATE	BY	CHK	APP'D
1	5/30/85	AB	HSW	MD

EBASCO SERVICES INCORPORATED

DIV. CIVIL DR. AB
DATE 9/14/84 CH. RS
SCALE NTS
APPROVED MD

H.B. ROBINSON - UNIT 2
AS-BUILT RESTRAINT SKETCH
SYSTEM: MAIN STEAM
ISO NO./POINT NO. MS-1A/1023

AB-CAR MS-1A-1023

SH. 3 OF 14

58

1891 2088

AF 16245

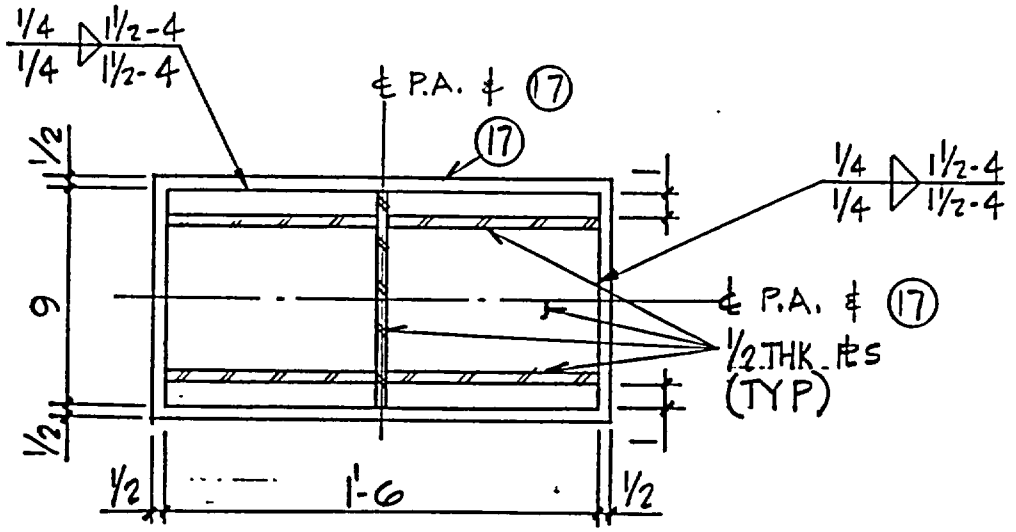

SECT F (SH 5)

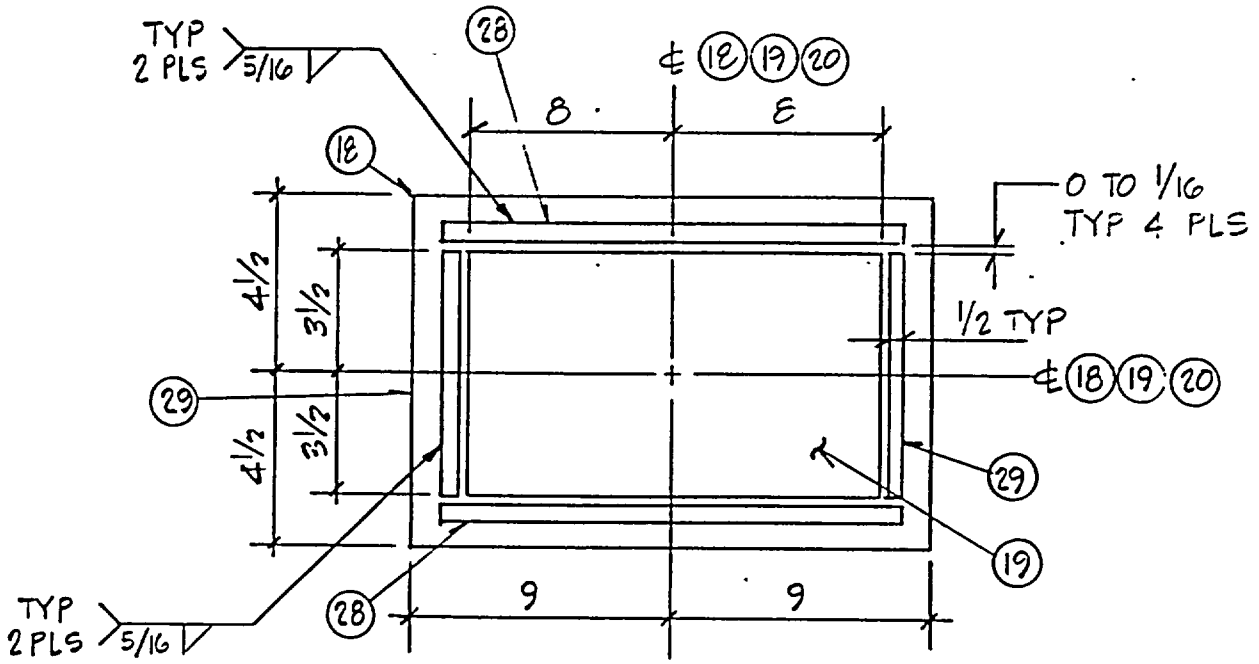

ATTACHED TUBE STL NOT SHOWN FOR CLARITY

SECT G (SH 5)

NUCLEAR SAFETY RELATED

REV	DATE	BY	CHK	APP'D
1	5/30/85	AS	HSW	MD

EBASCO SERVICES INCORPORATED

DIV. CIVIL DR. B
DATE 9/14/84 CH. RS
SCALE NTS
APPROVED
MD

H.B. ROBINSON - UNIT 2
AS BUILT RESTRAINT SKETCH
SYSTEM: MAIN STEAM
ISO NO./POINT NO. MS-1A/1023

AE-CAR MS-1A-1023

SH. 4 OF 14

AF 16245

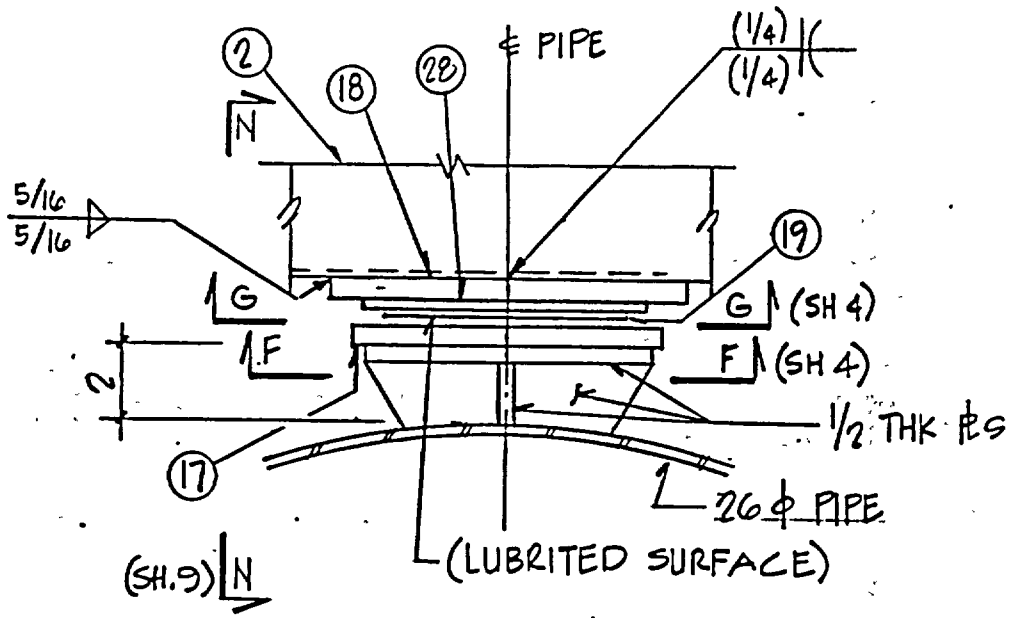

DET 1 (SH 1)

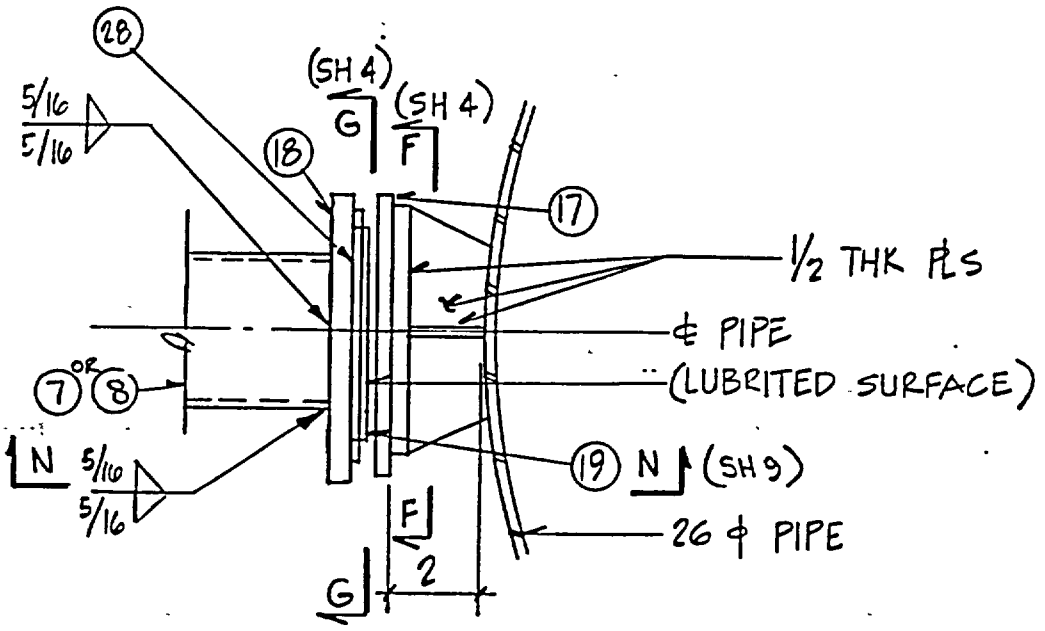

DET 2 (SH 1)

NUCLEAR SAFETY RELATED

REV	DATE	BY	CHK	APPD
1	5/30/85	A.	HSW	MD

EBASCO SERVICES INCORPORATED

DIV. CIVIL DR. TB
DATE 2/14/84 CH. RS
SCALE NTS
APPROVED
MD

H.B. ROBINSON – UNIT 2
AS-BUILT RESTRAINT SKETCH
SYSTEM: MAIN STEAM
ISO NO./POINT NO. MS-1A/1023

AE-CAR
MS-1A-
1023

SH. 5 OF 14

2090

1891

60

AF 16245

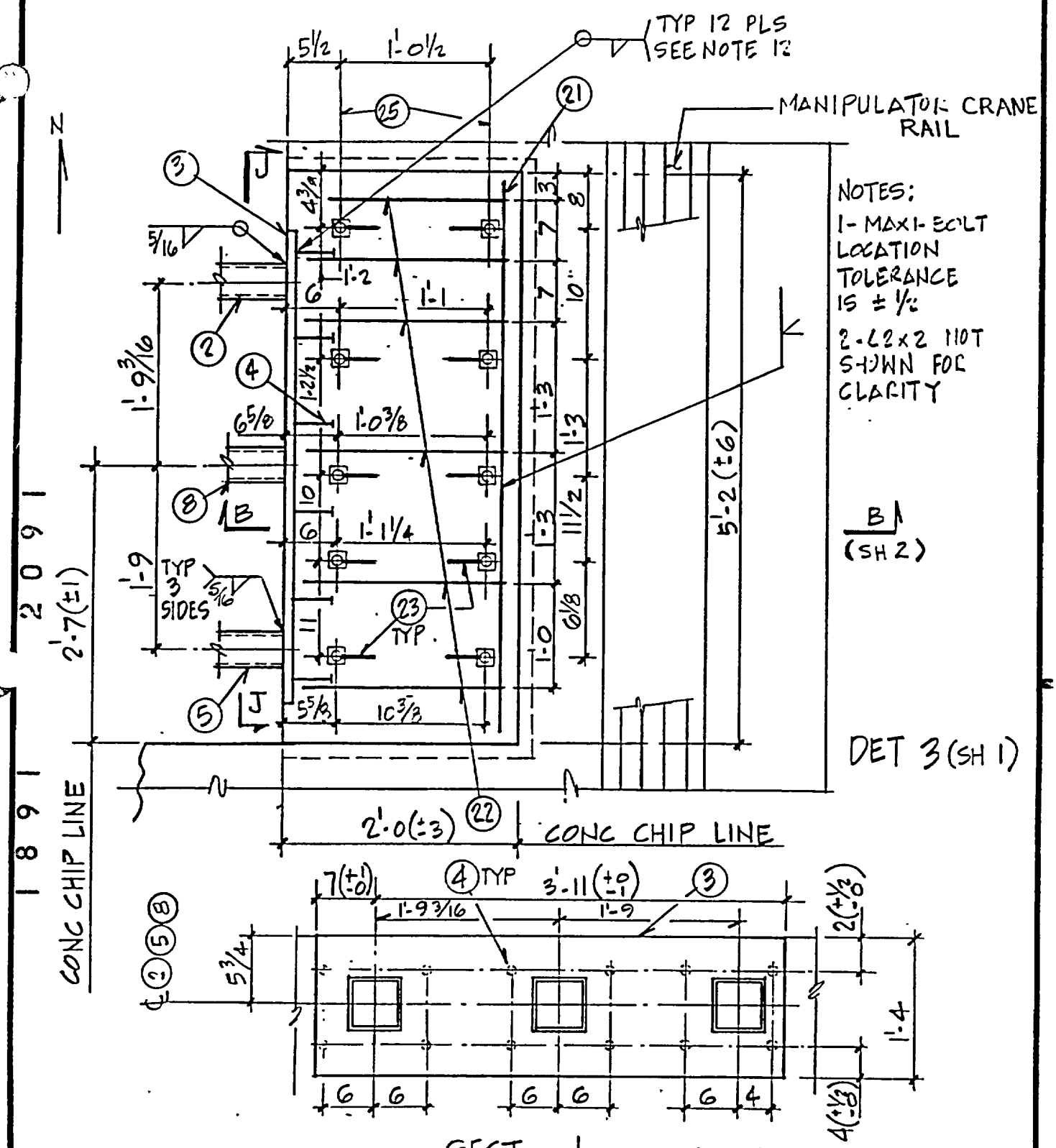

NUCLEAR SAFETY RELATED

REV	DATE	BY	CHK	APP'D
1	5/30/85	AB	HSW	MD

EBASCO SERVICES INCORPORATED

DIV. CIVIL DR. AB
DATE 9/14/84 CH. RS
SCALE NTS

APPROVED
MD

H.B. ROBINSON - UNIT 2
AS-BUILT RESTRAINT SKETCH
SYSTEM: MAIN STEAM
ISO NO./POINT NO. MS-1A/1023

AB-CAR
MS-1A-1023

SH. 6 OF 14

AF 16245

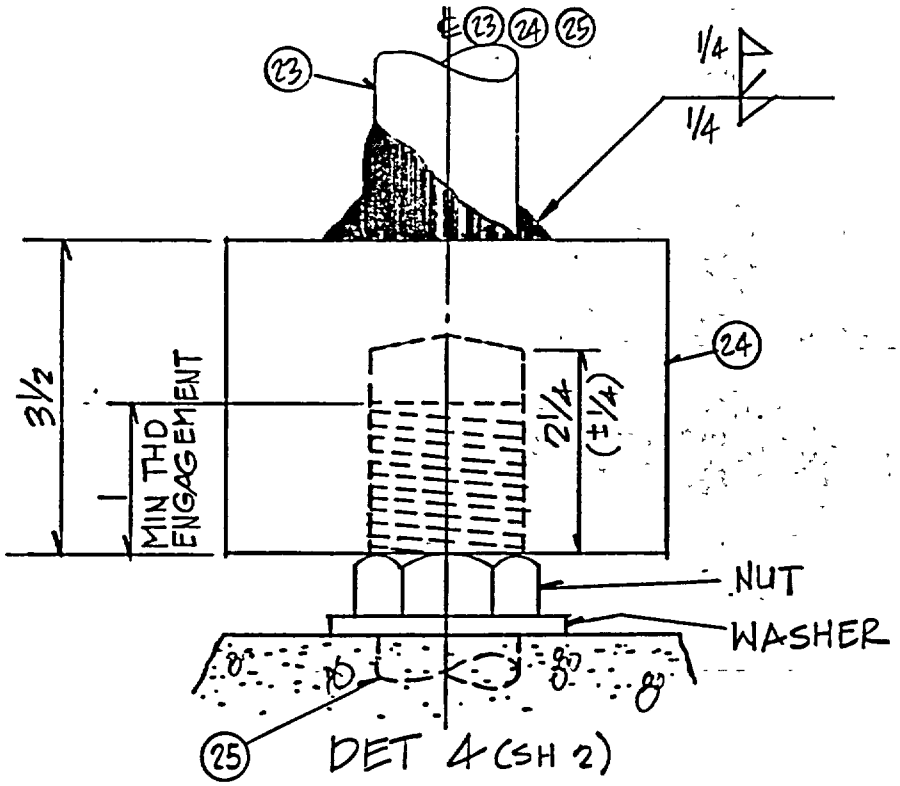

DET 4 (SH 2)

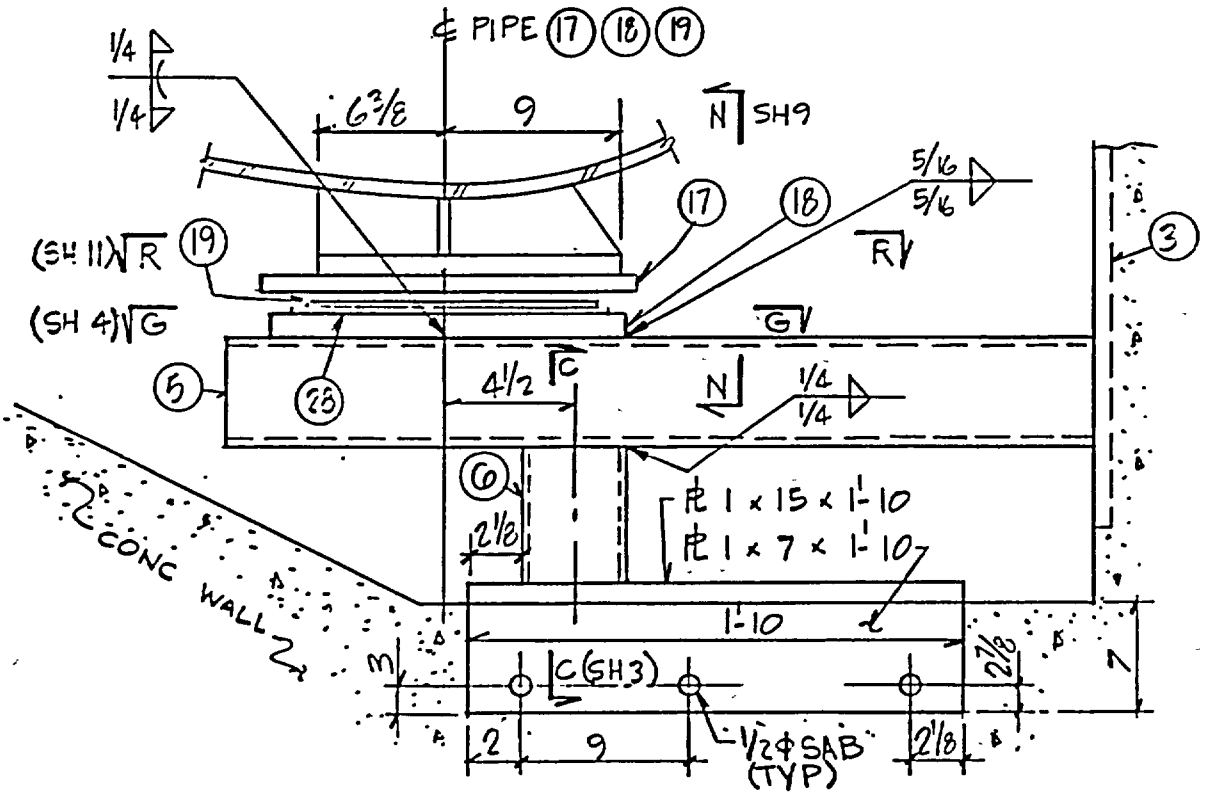

DET 5 (SH 1)

NUCLEAR SAFETY RELATED

REV	DATE	BY	CHK	APPD
1	5/30/85	AB	HEW	DD

EBASCO SERVICES INCORPORATED	H.B. ROBINSON - UNIT 2 AS-BUILT RESTRAINT SKETCH SYSTEM: MAIN STEAM ISO NO./POINT NO. MS-1A/1023	AB-CAR MS-1A-1023
DIV. CIVIL DR. AB DATE 2/14/84 CH. RS SCALE NTS APPROVED DD		SH. 7 OF 14

7 6 0 2 1 6 8 1

AF 16245

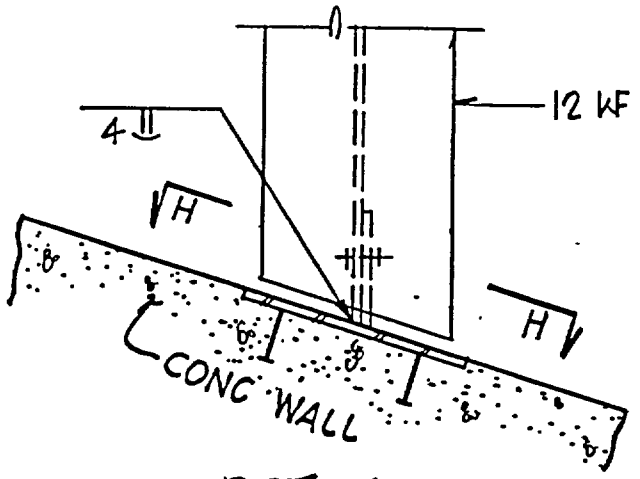

DET 6 (SH 1)

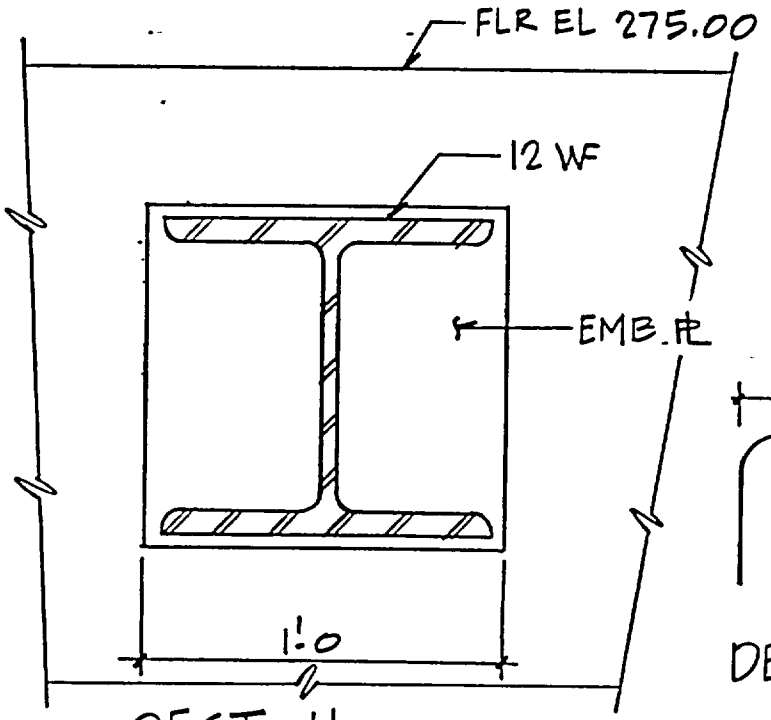

SECT H

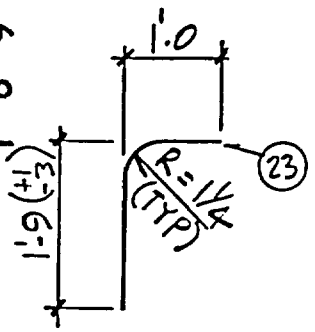

DET 8

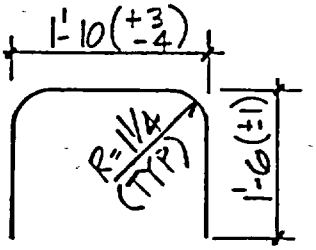

DET 7

NUCLEAR SAFETY RELATED

REV	DATE	BY	CHK	APP'D
1	5/30/85	AB	HSW	MD

EBASCO SERVICES INCORPORATED

DIV. CIVIL DR. AB
DATE 3/14/84 CH. PS
SCALE NTS
APPROVED

H.B. ROBINSON - UNIT 2
AS-BUILT RESTRAINT SKETCH
SYSTEM: MAIN STEAM
ISO NO./POINT NO. MS-1A/1023

AB-CAR MS-1A-1023

SH. 8 OF 14

1.2

AF 16245

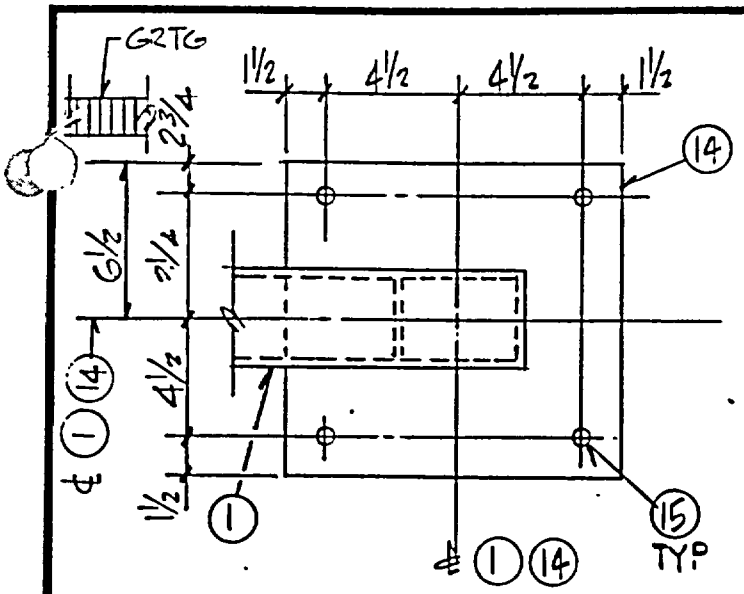

SECT K (SH 1)

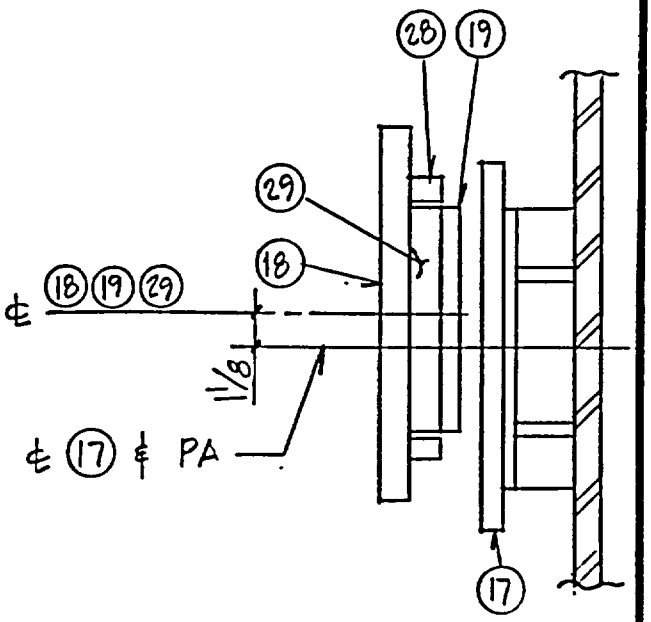

SECT N (SH 5, 7)

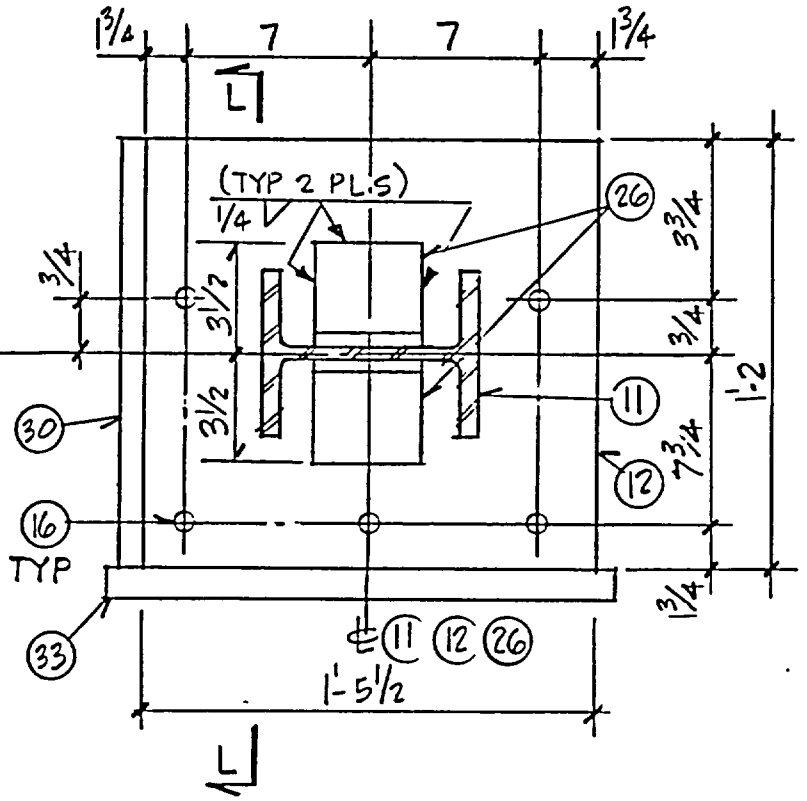

SECT M (SH 2)

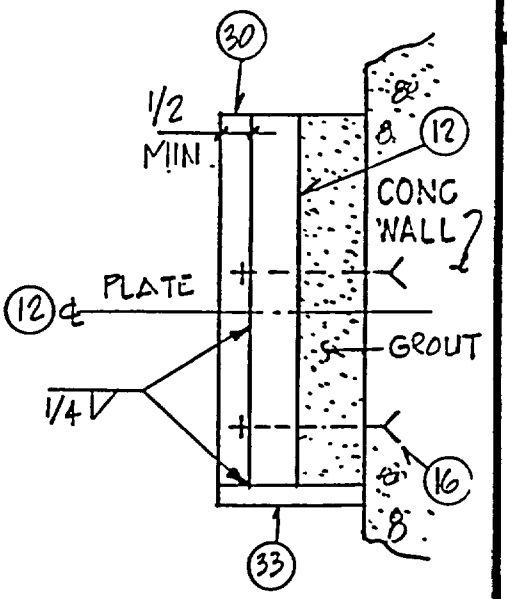

SECT L

2094

1891

NUCLEAR SAFETY RELATED

REV	DATE	BY	CHK	APP'D
1	5/30/85	AB	HSW	DD

EBASCO SERVICES INCORPORATED DIV. CIVIL DR. KF DATE 9/14/84 CH. RS SCALE NTS APPROVED DD	H.B. ROBINSON - UNIT 2 AS-BUILT RESTRAINT SKETCH SYSTEM: MAIN STEAM ISO NO./POINT NO. MS-1A/1023	AS-CAR-MS-1A 1023 SH. 9 OF 14

104

AF 16245

NOTES:

1. FOR GENERAL NOTES SEE SK-MOD-CAR-GN-1, LATEST REVISION.

2. ALL WELDS ARE NEW WELDS UNLESS OTHERWISE NOTED.

3. CONCRETE SHALL BE REMOVED TO THE LIMITS SHOWN TO EXPOSE THE REINFORCING BARS.

4. PRECAUTIONS SHALL BE TAKEN TO AVOID DAMAGE TO BARS DURING ALL CONCRETE REMOVAL OPERATIONS.

5. EXPOSED REINFORCING BARS SHALL BE CLEAN AND FREE OF OLD CONCRETE.

6. EXPOSED CONCRETE SURFACES AGAINST WHICH NEW CONCRETE WILL BE PLACED SHALL BE ROUGHENED TO APPROXIMATELY 1/4 INCH AND CLEANED PRIOR TO THE PLACEMENT OF THE REINFORCING BARS AND NEW CONCRETE.

7. NEW REINFORCING BARS SHALL BE DEFORMED AND SHALL CONFORM TO THE REQUIREMENTS OF EBASCO SPECIFICATION CAR-HBR-C-3; DATED FEBRUARY 3, 1977. ALL BARS SHALL BE BENT COLD.

8. REINFORCING BAR WELDING PROCEDURES, WORKMANSHIP, QUALIFICATIONS, AND INSPECTION SHALL BE PERFORMED IN ACCORDANCE WITH AWS D1.4-79, "STRUCTURAL WELDING CODE - REINFORCING STEEL", SECTIONS 1, 4, 5, 6 AND 7, FOR ASTM A615 GRADE 60 BARS.

   WELDING SHALL BE PERFORMED USING THE MANUAL SHIELDED METAL ARC (SMAW) PROCESS. LOW HYDROGEN ELECTRODES SHALL BE STORED IN OVENS PER AWS D1.4-79, AND SHALL NOT BE EXPOSED TO AMBIENT ATMOSPHERE FOR MORE THAN ONE HOUR PRIOR TO USE.

   MINIMUM PREHEAT AND INTERPASS TEMPERATURES SHALL BE IN ACCORDANCE WITH AWS D1.4-79 TABLE 5.2.

   ALL WELDS SHALL BE VISUALLY EXAMINED FOR NONCONFORMANCE WITH THE ACCEPTANCE STANDARDS OF AWS D1.4-79, SECTION 4.4.

NUCLEAR SAFETY RELATED

REV	DATE	BY	CHK	APPD
1	5/30/85	AB	HSW	MD

EBASCO SERVICES INCORPORATED

DIV. CIVIL DR. AD
DATE 3/14/74 CH. RS
SCALE NTS
APPROVED MD

H.B. ROBINSON - UNIT 2
AS-BUILT RESTRAINT SKETCH
SYSTEM: MAIN STEAM
ISO NO./POINT NO. MS-1A/1023

AB -CAR-MS-1A-1023

SH. 10 OF 14

2095

1681

AF 16245

EXPOSED REINFORCING BARS SHALL BE PROTECTED DURING THE WELDING OPERATION TO PREVENT INADVERTENT ARC STRIKES.

9. CONCRETE SHALL BE PLACED TO ORIGINAL CONFIGURATION. CONCRETE SHALL BE IN ACCORDANCE WITH CP&L SPECIFICATION L2-C-008 AND L2-C-011, LATEST REVISIONS.

10. AFTER CONCRETE HAS CURED, THE ORIGINAL COATING SYSTEM SHALL BE APPLIED TO ALL CONCRETE SURFACES, IN ACCORDANCE WITH WORK PROCEDURE WP-3.

11. NELSON STUDS [ITEM 4] SHALL BE WELDED TO THE PLATE [ITEM 3] AS PER CP & L WELDING PROCEDURE WPS-1A4

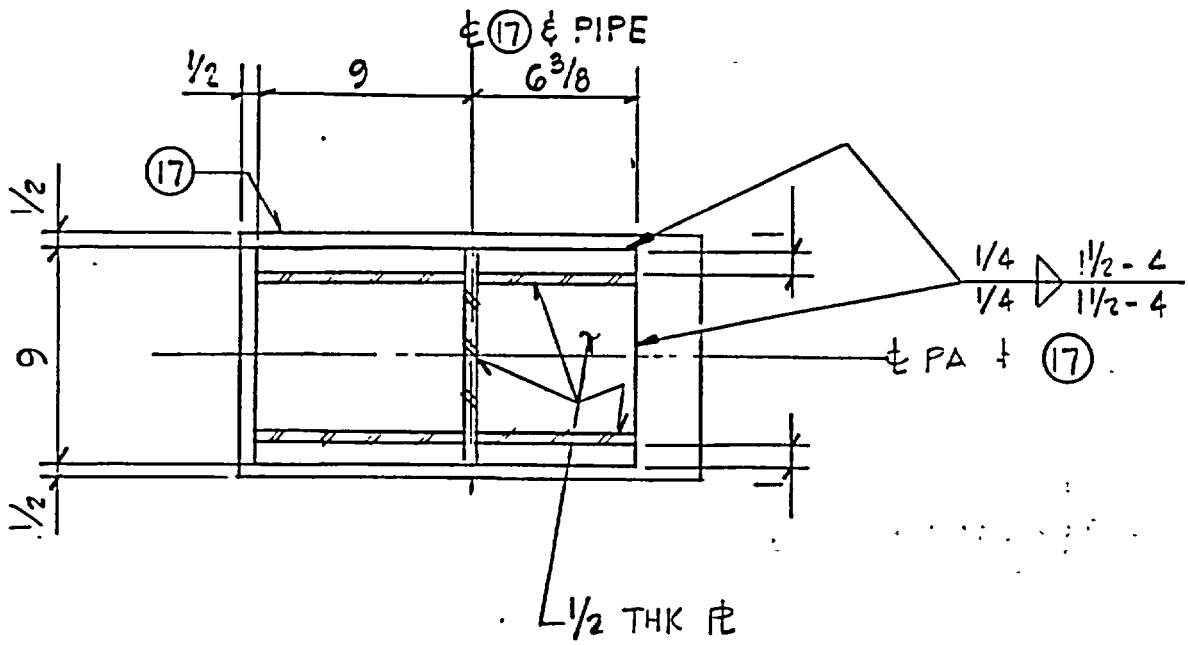

SECT R (SH 7)

NUCLEAR SAFETY RELATED

REV	DATE	BY	CHK	APP'D
1	5/30/85	AS	HCW	MD

EBASCO SERVICES INCORPORATED

DIV. CIVIL DR. AD
DATE 2/14/84 CH. RS
SCALE NTS
APPROVED
MD

H.B. ROBINSON - UNIT 2
AS-BUILT RESTRAINT SKETCH
SYSTEM: MAIN STEAM
ISO NO./POINT NO. MS-1A/1023

AS -CAR-
MS-1A-1023
SH. 11 OF 14

AF 16245

BILL OF MATERIALS

ITEM	QTY	DESCRIPTION	QA CLASS Q	QA CLASS NA
①	1	TS 4×4×1/2×5'-6	YES	
		(ASTM A-500 GR B)		
②	1	TS 6×6×1/2×4'-0 3/8	YES	
		(ASTM A-500 GR B)		
③	1	PL 1×16×4'-6	YES	
④	12	5/8×6 9/16 H4L NELSON CONCRETE ANCHOR	YES	
		STUDS PART NO. 101-053-019 (TRW-NELSON DIV)		
⑤	1	TS 6×6×1/2×3'-0	YES	
		(ASTM A-500 GR B)		
⑥	1	TS 6×6×1/2×0'-5 1/2	YES	
		(ASTM A-500 GR B)		
⑦	1	TS 6×6×1/2×0'-6 7/8	YES	
		(ASTM A-500 GR B)		
⑧	1	TS 6×6×1/2×0'-6 1/2	YES	
		(ASTM A-500 GR B)		
⑨	1	TS 6×6×1/2×2-3 3/8 (CUT TO SUIT)	YES	
		(ASTM A-500 GR B)		

ALL STRUCTURAL STEEL ASTM A 36 UNLESS NOTED

REV	DATE	BY	CHK	APP'D
1	5/30/85	AB	HSW	DD

EBASCO SERVICES INCORPORATED

DIV. CIVIL DR. AB
DATE 2/14/84 CH. RS
SCALE NONE
APPROVED DD

CP&L / H. B. ROBINSON - UNIT 2
AS-BUILT RESTRAINT SKETCH
SYSTEM: MAIN STEAM
ISO NO./POINT NO. MS-1A/1023

AB-CAR
MS-1A-1023

SH. 12 OF 14

67

AF 16245

BILL OF MATERIALS

ITEM	QTY	DESCRIPTION	QA CLASS Q	QA CLASS NA
(10)	1	TS 6×6×1/2 × 2'-9 1/2	YES	
		(ASTM A-500 GR B)		
(11)	1	W 8×28 × 1'-3	YES	
(12)	1	PL 1 × 14 × 1'-5 1/2	YES	
(13)	4	PL 3/8 × 3 3/4 × 0'-7	YES	
(14)	1	PL 3/4 × 12 × 1'-0	YES	
(15)	4	3/4 ϕ WEDGE ANCHOR WS-3470	YES	
		(ITT PHILLIPS)		
(16)	5	1 ϕ WEDGE ANCHOR WS-10090	YES	
		(ITT PHILLIPS)		
(17)	4	PL 1/2 × 10 × 1'-7 (ASTM A-240 TP 304)	YES	
		(FINISH SURFACE TO 63 RMS)		
(18)	4	PL 1 × 9 × 1'-6	YES	
(19)	4	LUBRITE PL 1/2 × 7 × 1'-4 (ASTM B22-C86300)	YES	
		W/AE-7 LUBRICANT		

ALL STRUCTURAL STEEL ASTM A 36 UNLESS NOTED

REV	DATE	BY	CHK	APP'D
1	5/30/85	AB	HSW	MD

EBASCO SERVICES INCORPORATED

DIV. CIVIL DR. [illegible]
DATE 3/14/84 CH. RS
SCALE NONE

APPROVED [illegible]
MD

CP&L / H. B. ROBINSON - UNIT 2
AS-BUILT RESTRAINT SKETCH
SYSTEM: MAIN STEAM
ISO NO./POINT NO. MS-1A/1023

AS-CAR
MS-1A-1023
SH. 13 OF 14

1.4

AF 16245

BILL OF MATERIALS

ITEM	QTY	DESCRIPTION	QA CLASS Q	QA CLASS NA
(21)	3	#8 BARS x 5'-4 (ASTM A-615 GR 60)	YES	
(22)	12	#5 BARS x 5'-0 (BEND PER DET 7)	YES	
		(ASTM A-615 GR 60)		
(23)	10	#5 BARS x 2'-9 (BEND PER DET 8)	YES	
		(ASTM A-615 GR 60)		
(24)	10	2 SQ x 0'-3 1/2 STL BAR (SEE DET 4, SH 7)	YES	
(25)	10	5/8 ϕ MAXI BOLTS MB-625-12-9	YES	
		(DRILLCO DIV, LTD)		
(26)	2	∠ 4 x 4 x 1/2 x 0'-6 (TRIM ONE LEG AS SHOWN)	YES	
(27)	AS REQ'D	CONCRETE (f'c = 4000 PSI)	YES	
(28)	8	PL 3/8 x 1/2 x 1'-5 LG	YES	
—	AS REQ'D	EMBECO 636 GROUT	YES	
(29)	8	PL 3/8 x 1/2 x 0'-7 LG	YES	
(30)	1	PL 1/2 x 3 x 1'-2 3/16	YES	
(31)	2	7/8 ϕ x 2 7/8 LG ASTM A-325 BOLTS WITH	YES	
		STANDARD WASHER AND HEAVY HEX NUT		
(32)	1	PL 1/2 x 8 x 0'-10	YES	
(33)	1	PL 1/2 x 3 3/4 x 1'-4 1/2	YES	

ALL STRUCTURAL STEEL ASTM A 36 UNLESS NOTED

REV	DATE	BY	CHK	APP'D
1	5/30/85	TN	HSCW	MD

EBASCO SERVICES INCORPORATED

DIV. CIVIL DR. B
DATE 2/14/84 CH. RS
SCALE NONE
APPROVED

CP&L / H. B. ROBINSON - UNIT 2
AS-BUILT RESTRAINT SKETCH
SYSTEM: MAIN STEAM
ISO NO./POINT NO. MS-1A/1023

AB-CAR MS-1A-1023

SH. 14 OF 14

AF 16245

CPL-212/R-WS

N/A

BASE PLATE IDENTIFICATION

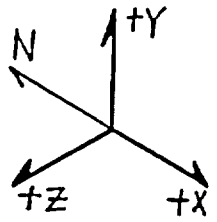

F_X = — lbs (—)

F_Y = — lbs (—)

F_Z = 90466 lbs (84079)

LOAD CASE DW+THRM+OBE (DW+THRM+DBE)

(EBASCO CMPTR RUN)

DATE: 8-7-84 TIME: 12:46 PM

RESTRAINT LOADS

RESTRAINT LOCATION:
SEE ISO NO. MS-1A
PT NO. 1007 (1007)

REACTOR BLDG
OUTSIDE CRANE WALL
AT PIPE RESTRAINT
STRUCTURE

REST. CALC. NO. MS-1A-1007

MOD. NO. N/A

PMR. NO. N/A

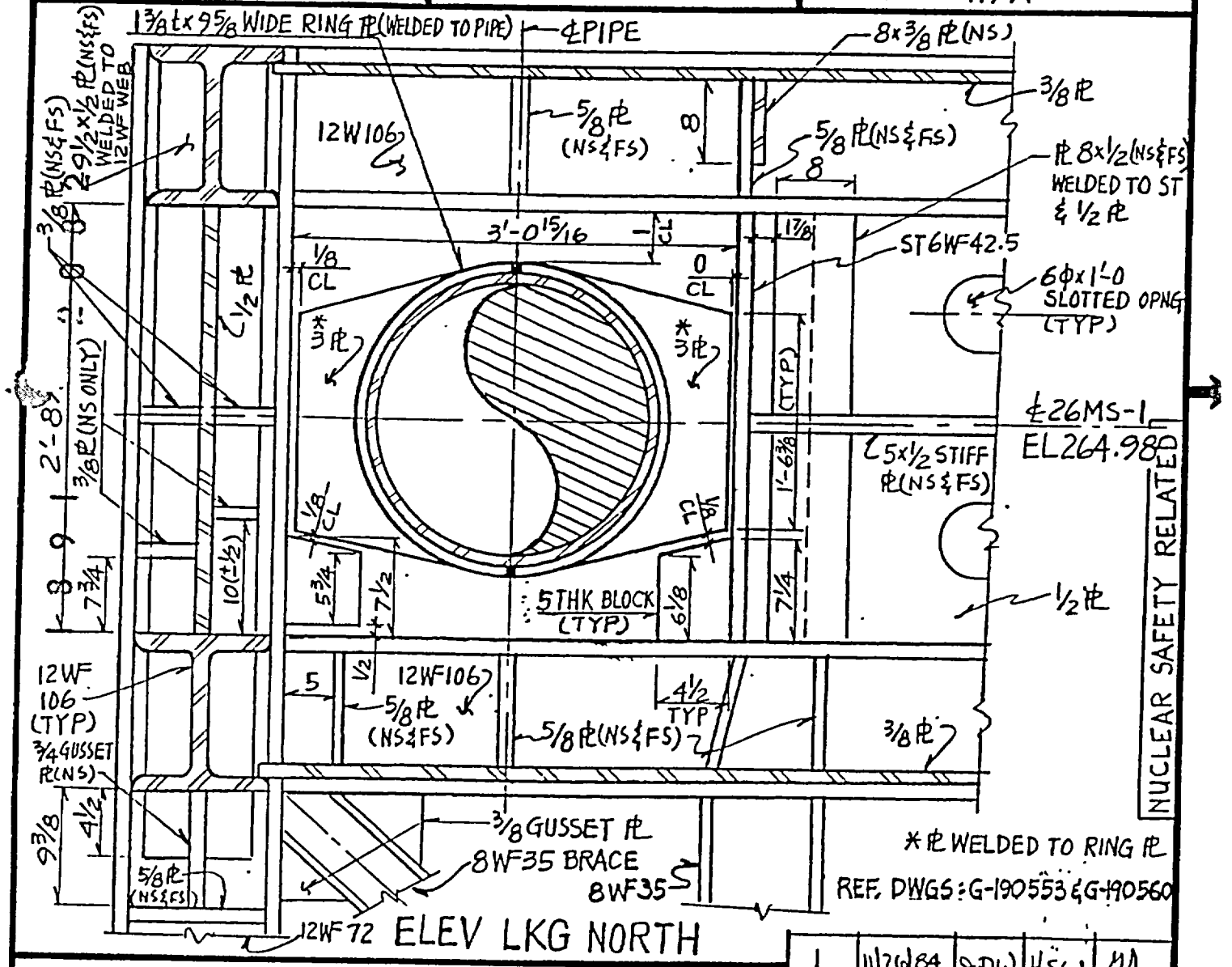

REV	DATE	BY	CHK	APP'D
1	11/26/84	DW	HSW	DD

EBASCO SERVICES INCORPORATED

DIV. CIVIL DR. C.W.
DATE 9/14/84 CH. AH
SCALE NTS

APPROVED
DD
HSW

H. B. ROBINSON - UNIT 2
AS-BUILT RESTRAINT SKETCH
SYSTEM: MAIN STEAM
ISO NO./POINT NO. MS-1A/1007

AB-CAR-MS-1A-1007
SH. 1 OF 1

AF 16245

CPL-213/F-WS

N/A

BASE PLATE IDENTIFICATION

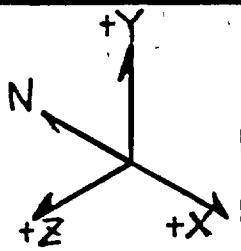

F_x = (——) lbs

F_y = (——) lbs

F_z = 181,966 (195,440) lbs

LOAD CASE DW+THRM+OBE / (DW+THRM+DBE)

EBASCO CMPTR RUN
DATE: 8-29-84 TIME: 11:01 AM

RESTRAINT LOADS

RESTRAINT LOCATION:
SEE ISO NO. MS-1B
PT NO. 1005(1005)

REACTOR BLDG-OUTSIDE CRANE WALL @ PIPE RESTRAINT STRUCTURE

REST. CALC. NO. MS-1B-1005

MOD. NO. N/A

PMR. NO. N/A

NUCLEAR SAFETY RELATED

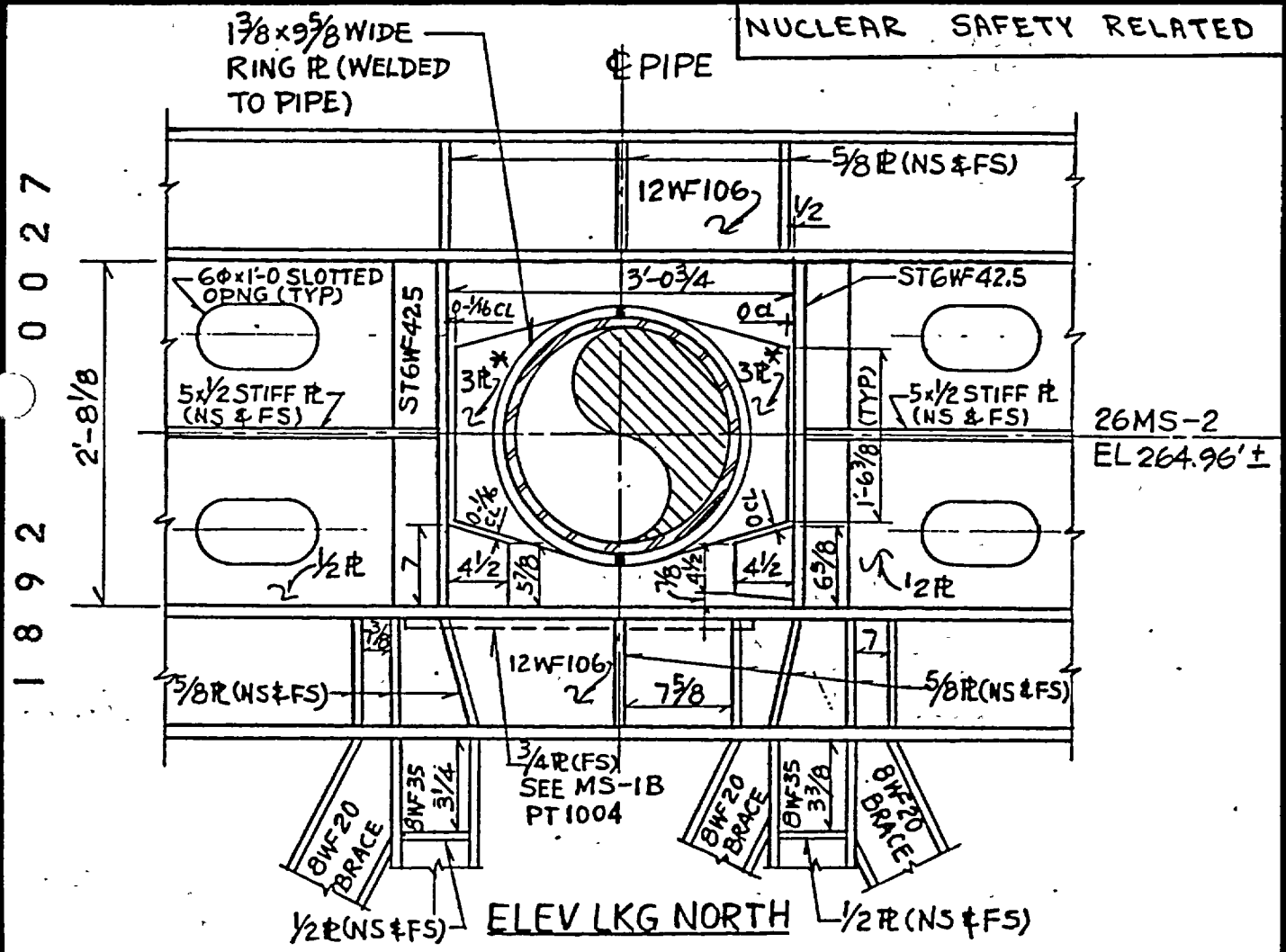

* PL WELDED TO RING PL

REF. DWGS: G-190553 & G-190560

REV	DATE	BY	CHK	APP'D
1	12/5/84	AB	HSW	MD.

EBASCO SERVICES INCORPORATED	H. B. ROBINSON - UNIT 2 AS-BUILT RESTRAINT SKETCH SYSTEM: MAIN STEAM ISO NO. 7 POINT NO. MS-1B/1005	AB-CAR- MS-1B-1005 SH. 1 OF 1
DIV. CIVIL DR. TH DATE 2/4/84 CH. CC SCALE NTS APPROVED MD HSW		

0 0 0 2 7

N/A

BASE PLATE IDENTIFICATION

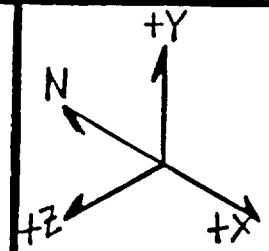

F_X = — lbs
(—)
F_Y = — lbs
(—)
F_Z = 119992 lbs
(132016)

LOAD CASE THRM+OBE
(THRM+DBE)

(EBASCO CMPTR RUN)
DATE: 8-9-84 TIME: 12:40 PM
RESTRAINT LOADS

RESTRAINT LOCATION:
SEE ISO NO. MS-1C
PT NO. 1003(1003)

REACTOR BLDG
OUTSIDE CRANE WALL
AT PIPE RESTRAINT
STRUCTURE

REST. CALC. NO. MS-1C-1003
MOD. NO. N/A
PMR. NO. N/A

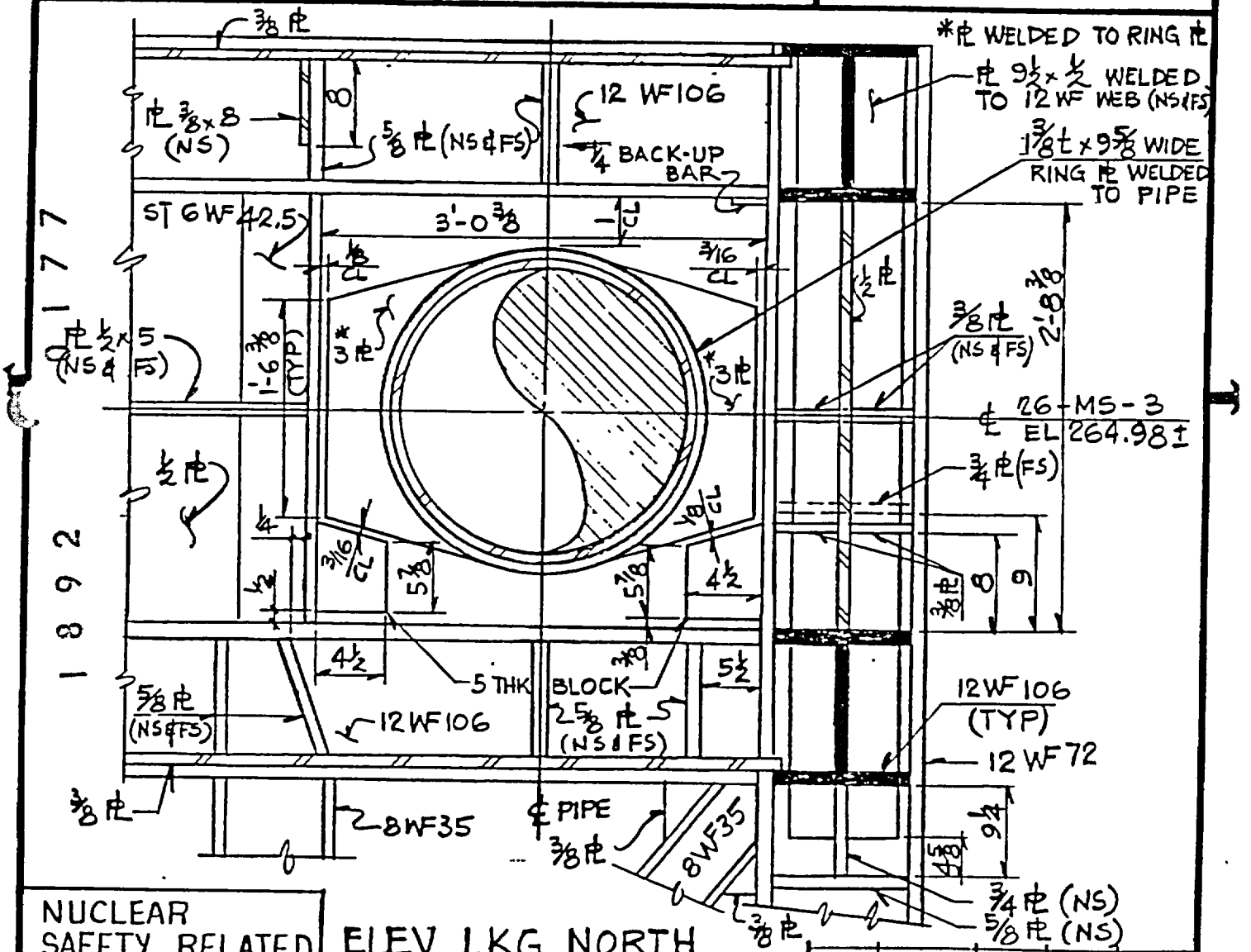

NUCLEAR SAFETY RELATED

ELEV LKG NORTH

REV	DATE	BY	CHK	APP'D
1	11/2/85	CAW	HSW	DD

BASCO SERVICES INCORPORATED

DIV. CIVIL DR. SDC
DATE 2/17/84 CH. CC
SCALE NTS

APPROVED
DD
HSW

H. B. ROBINSON - UNIT 2
AS-BUILT RESTRAINT SKETCH
SYSTEM: MAIN STEAM
ISO NO./POINT NO. MS-1C/1003

AB-CAR-MS-1C-1003
SH. 1 OF 1

AF 16245

CPL-216/G-U

N/A

BASE PLATE IDENTIFICATION

N, +Y, +X, +Z

F_x = 30709 (11795) lbs

F_Y = 21620 (16215) lbs

F_Z = 54216 (54661) lbs

LOAD CASE THRM+OBE (THRM+DBE)

EBASCO CMPTR RUN

DATE: 11-4-85 TIME: 1:02 PM

RESTRAINT LOADS

RESTRAINT LOCATION SEE ISO NO. FW-5B PT NO. 1034(1)

RB-OUTSIDE CRAN WALL - SOUTH

REST. CALC. NO. FW-58-1

MOD. NO. N/A

PMR. NO. N/A

M_x = 374136 IN-LBS (238368) IN-LBS

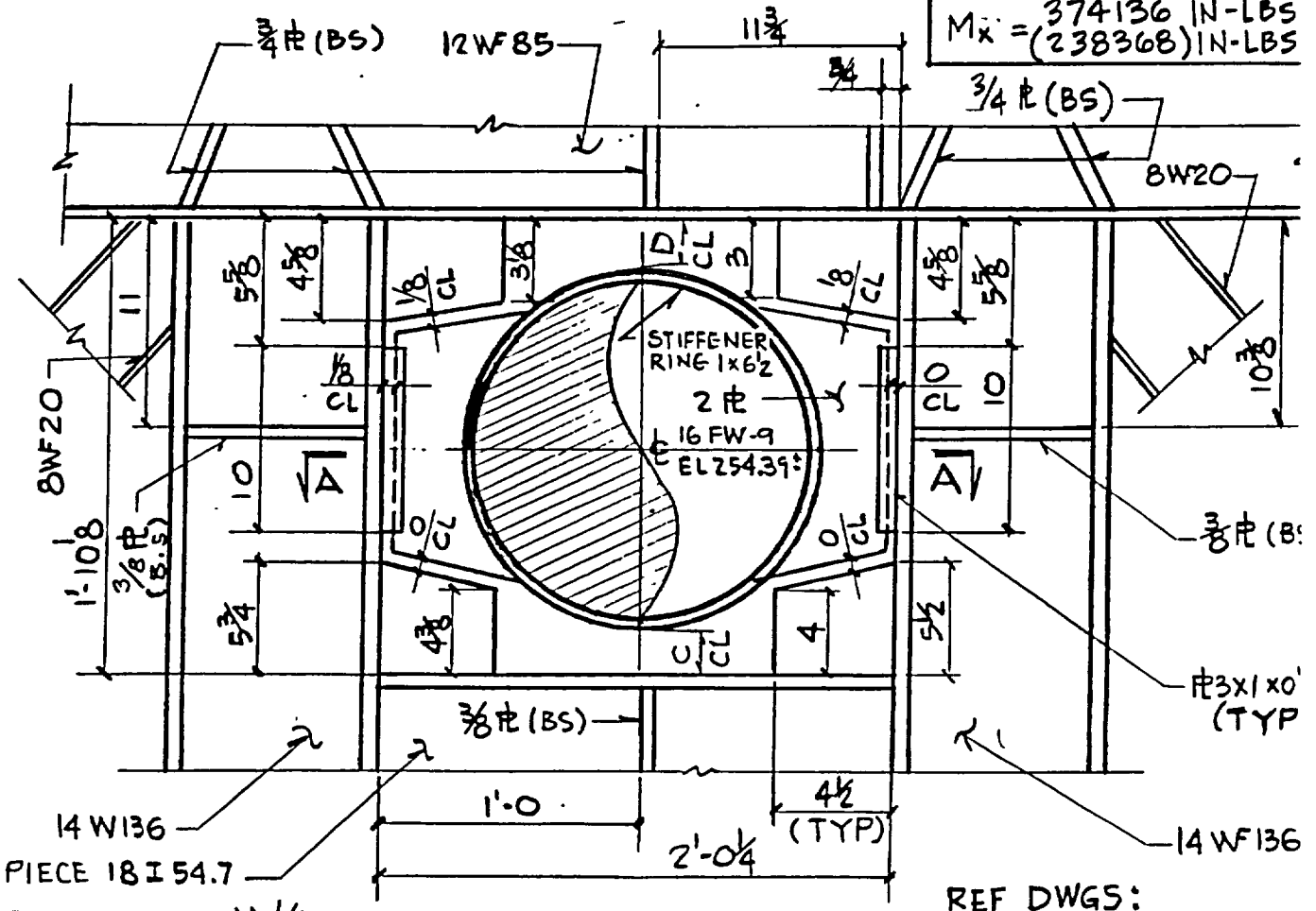

NOTE: C, D >> 1/8

ELEV LKG NORTH

REF DWGS:
G-190 553
G-190 560

NUCLEAR SAFETY RELATED

REV	DATE	BY	CHK	APP
2	11/22/85	HSW	RS	MD
1	12/11/84	AB	HSW	MD

EBASCO SERVICES INCORPORATED

DIV. CIVIL DR. YFT
DATE 8/12/84 CH. MJ
SCALE NTS

APPROVED MD HSW

H.B. ROBINSON - UNIT 2
AS-BUILT RESTRAINT SKETCH
SYSTEM: FEEDWATER
ISO NO./POINT NO. FW-5B/1034

AB-CAR-FW-5B-103
SH. 1 OF 2

1887 2509

AF 16245

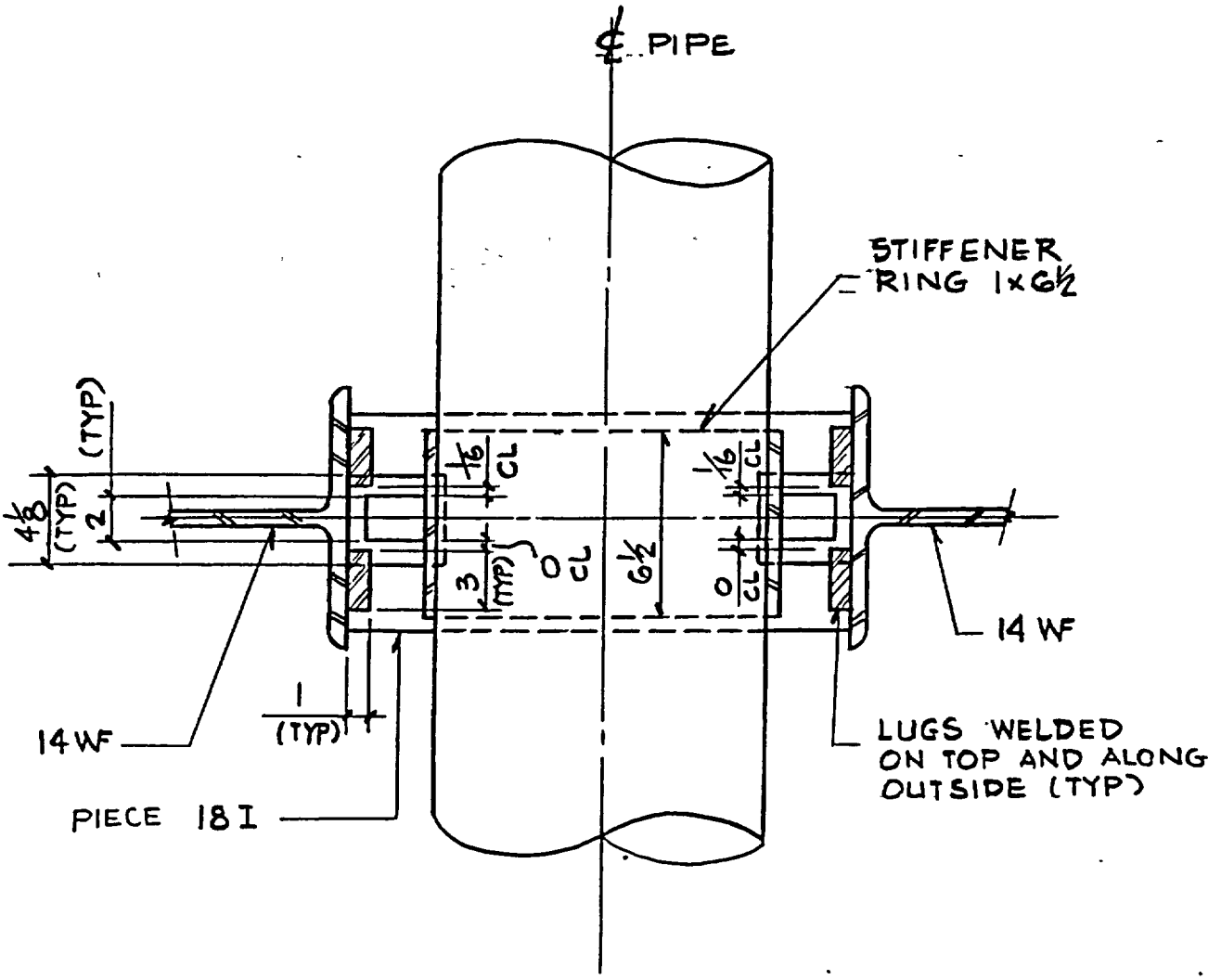

SECT A

REV	DATE	BY	CHK	APP
2	11/22/85	W&W	RS	MD
1	12/11/84	AB	HSW	MD

NUCLEAR SAFETY RELATED

EBASCO SERVICES INCORPORATED

DIV. CIVIL DR. YFT
DATE 9/12/84 CH. MJ
SCALE NTS

APPROVED
MD
HSW

H.B. ROBINSON – UNIT 2
AS-BUILT RESTRAINT SKETCH
SYSTEM: FEEDWATER
ISO NO./POINT NO. FW-5B/1034

AB-CAR-
FW-5B-103
SH. 2 OF 2

2510

1887

10-AC-1-LC-140

BASE PLATE IDENTIFICATION

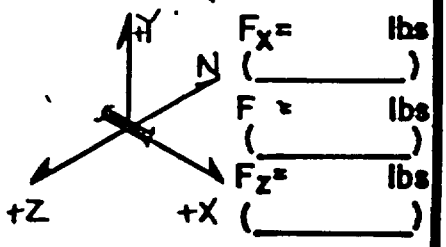

LOAD CASE

LOADS

RESTRAINT LOCATION:
SEE ISO NO. SI-20
PT NO. 1200 (1200)
RAB
PIPE ALLEY - WEST EXTENSION OF NORTH CORRIDOR

REST CALC NO. SI-20-1200

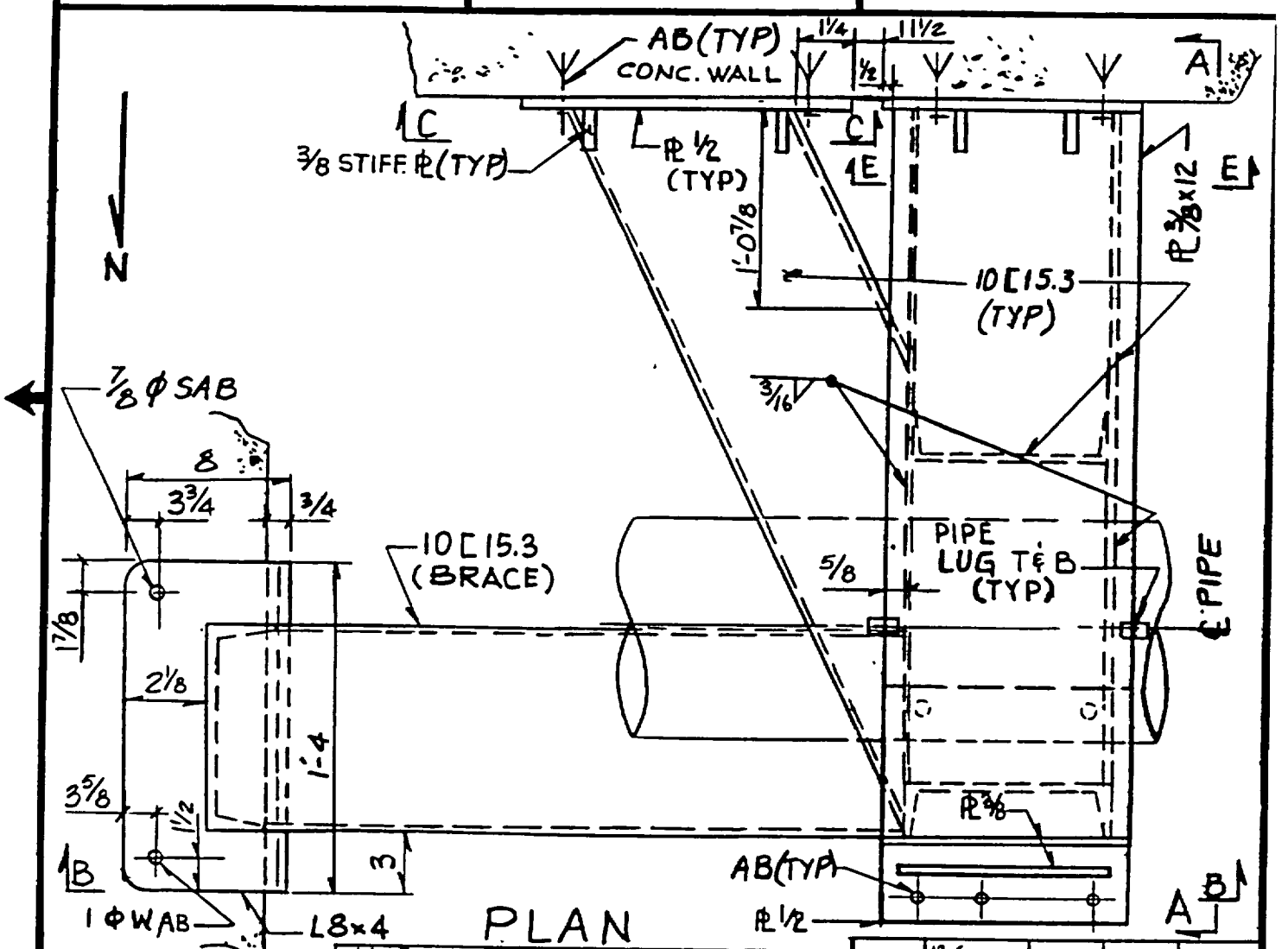

PLAN

NUCLEAR SAFETY RELATED

REV 4 INCORPORATES 'AS-BUILT' CONDITION

REV	DATE	BY	CHK	APPD
3	12/21/93	BTL	KC	LRP
4	5/30/95	BB	RGK	[illegible]

EBASCO SERVICES INCORPORATED	H.B. ROBINSON - UNIT 2 AS-BUILT RESTRAINT SKETCH SYSTEM: SAFETY INJECTION ISO NO./POINT NO. SI-20/1200	AB-CAR-SI-20-1200 SH. 1 OF 5
DIV. CIVIL DR. TG DATE 9/15/89 CH. JG SCALE NTS JM	APPROVED M.A. Mancini MNC	

CPL-221A-I

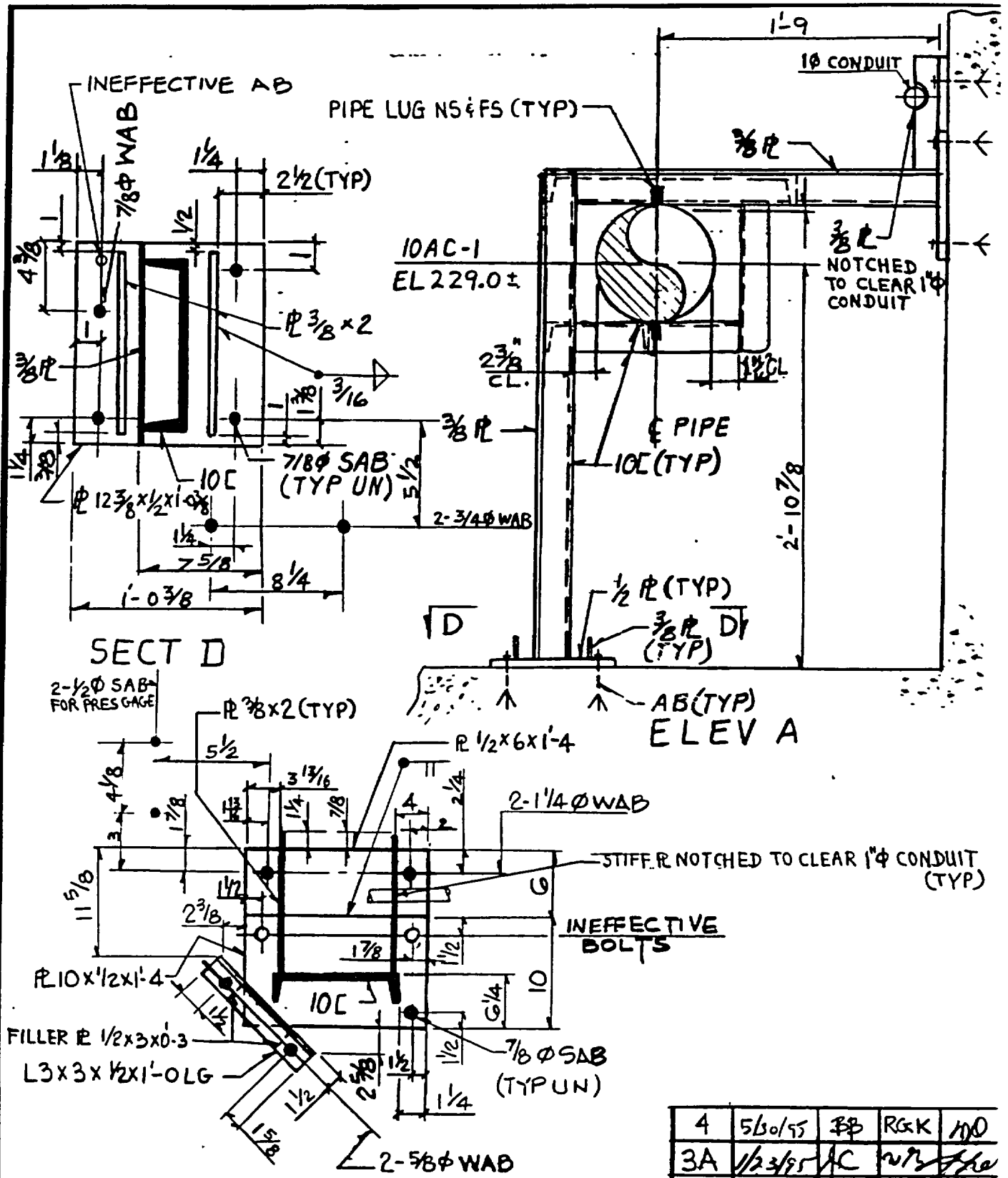

REV	DATE	BY	CHK	APPD
4	5/30/95	BB	RGK	MO
3A	1/23/95	AC	[illegible]	[illegible]
3	12/21/93	BTL	KC	[illegible]

NUCLEAR SAFETY RELATED

EBASCO SERVICES INCORPORATED	H.B. ROBINSON - UNIT 2 AS-BUILT RESTRAINT SKETCH SYSTEM: SAFETY INJECTION ISO NO./POINT NO. SI-20/1200	AB-CAR-SI-20-1200
DIV. CIVIL DR. TGT DATE 9/15/84 CH. JG SCALE NTS JM	APPROVED MR Mancini MNC	SH. 2 OF 5

CPL-2214-J

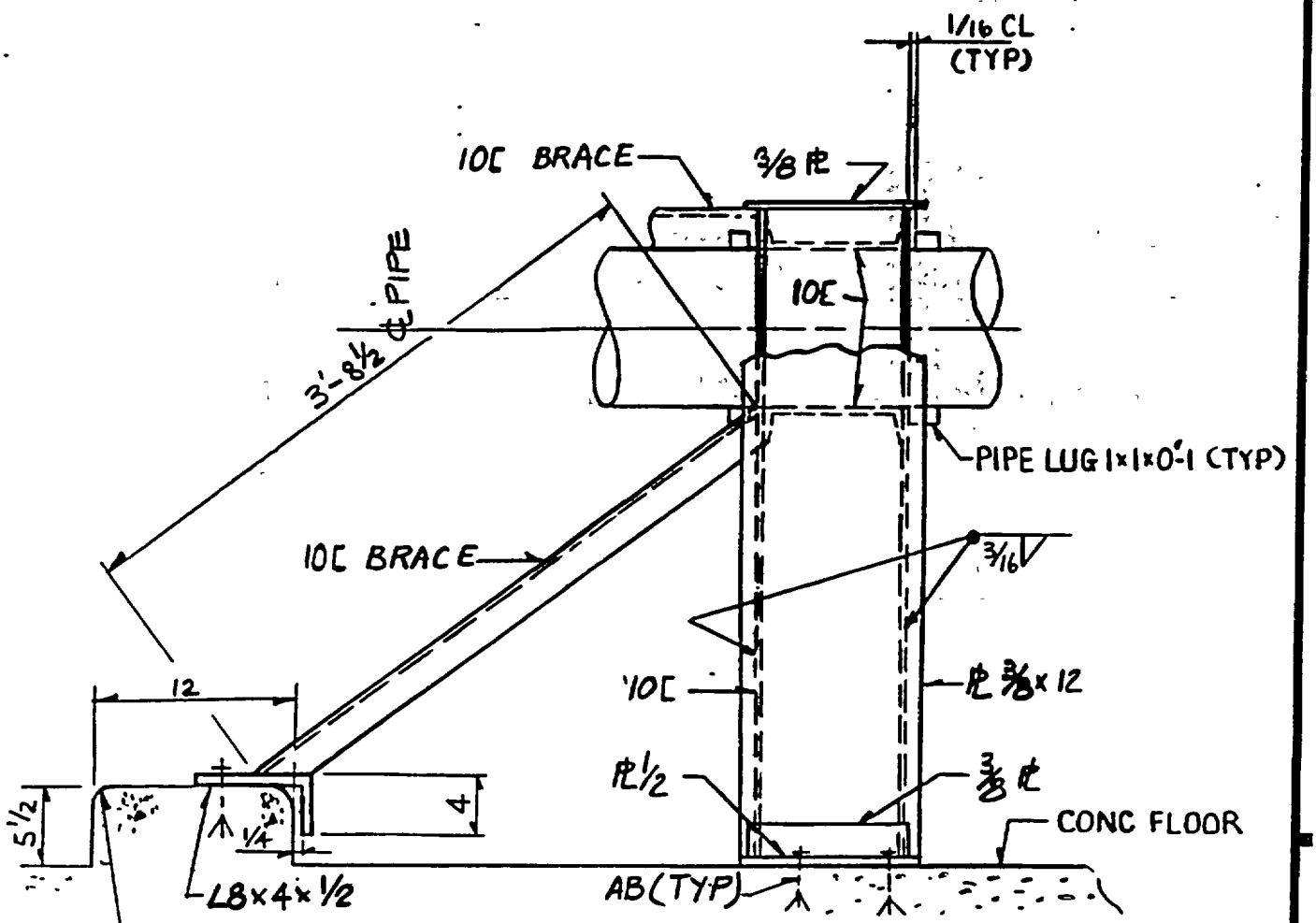

ELEV B

REV	DATE	BY	CHK	APP'D
2	4/8/86	JB	RS	MD
1	6/25/85	TN	HSW	MD

NUCLEAR SAFETY RELATED

EBASCO SERVICES INCORPORATED

DIV. CIVIL DR TG
DATE 9/15/84 CH. JG
SCALE NTS JM

APPROVED
MNC

H.B. ROBINSON – UNIT 2
AS-BUILT RESTRAINT SKETCH
SYSTEM: SAFETY INJECTION
ISO NO./POINT NO. SI-20/1200

AB-CAR-SI-20-1200
SH. 3 OF 5

CPL-2211A-J

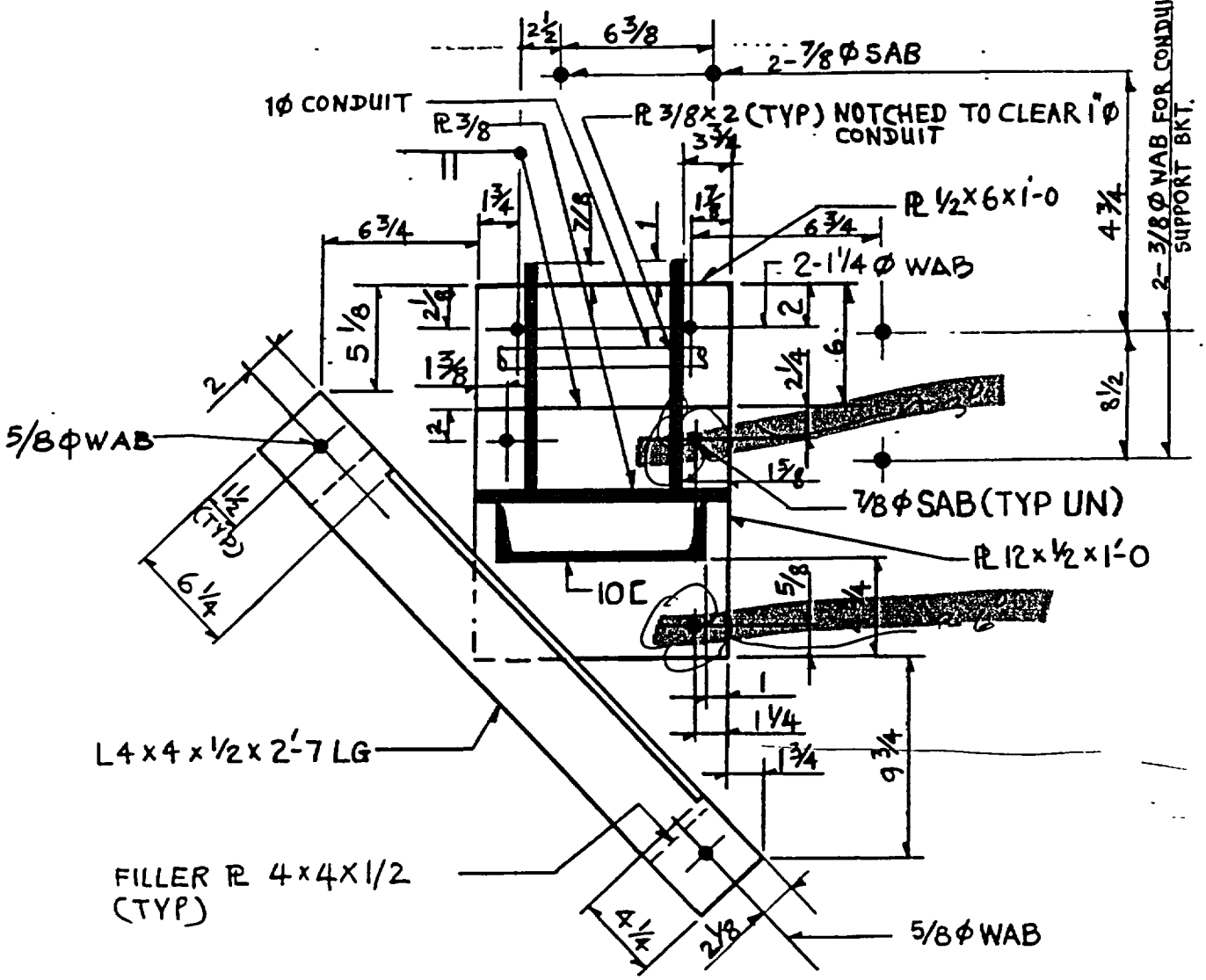

SECT E

REV	DATE	BY	CHK	APP'D
2	4/8/86	JB	RS	MD
1	6/25/85	TN	HBW	MD

NUCLEAR SAFETY RELATED

EBASCO SERVICES INCORPORATED	H.B. ROBINSON - UNIT 2 AS-BUILT RESTRAINT SKETCH SYSTEM: SAFETY INJECTION ISO NO./POINT NO. SI-20/1200	AB-CAR-SI-20-1200
DIV. CIVIL DR. TG DATE 9/15/84 CH. JG SCALE NTS JM APPROVED MNC		SH. 4 OF 5

CPL-2214-I

BILL OF MATERIALS

ITEM	QTY	DESCRIPTION	QA CLASS Q	QA CLASS NA

ALL STRUCTURAL STEEL ASTM A 36 UNLESS NOTED

REV	DATE	BY	CHK	APP'D
2A	8/20/93	BTL	[illegible]	[illegible]
2	4/8/86	JB	RS	MD
3	12/21/93	BTL	KC	ARP

EBASCO SERVICES INCORPORATED

DIV. CIVIL DR. TG
DATE 9/15/84 CH. JG
SCALE NONE JM

APPROVED
MR Mancuso
MNC

CP&L / H. B. ROBINSON - UNIT 2
AS-BUILT RESTRAINT SKETCH
SYSTEM: SAFETY INJECTION
ISO NO./POINT NO. SI-20/1200

AB -CAR-
SI-20-1200
SH. 5 OF 5

CPL-22A-I

AF 16245

CPL-233/D-WS

G-SI-88-CF-40

BASE PLATE IDENTIFICATION

+Y
N
+Z
+X

F_X = lbs ( )
F_Y = — lbs (—)
F_Z = — lbs (—)

LOAD CASE

LOADS

RESTRAINT LOCATION:
SEE ISO NO. SI-20
PT NO. 944(944)

REACTOR AUX BLDG.
PIPE ALLEY

REST CALC NO SI-20-944
MOD NO M492-REV3
PMR NO 3

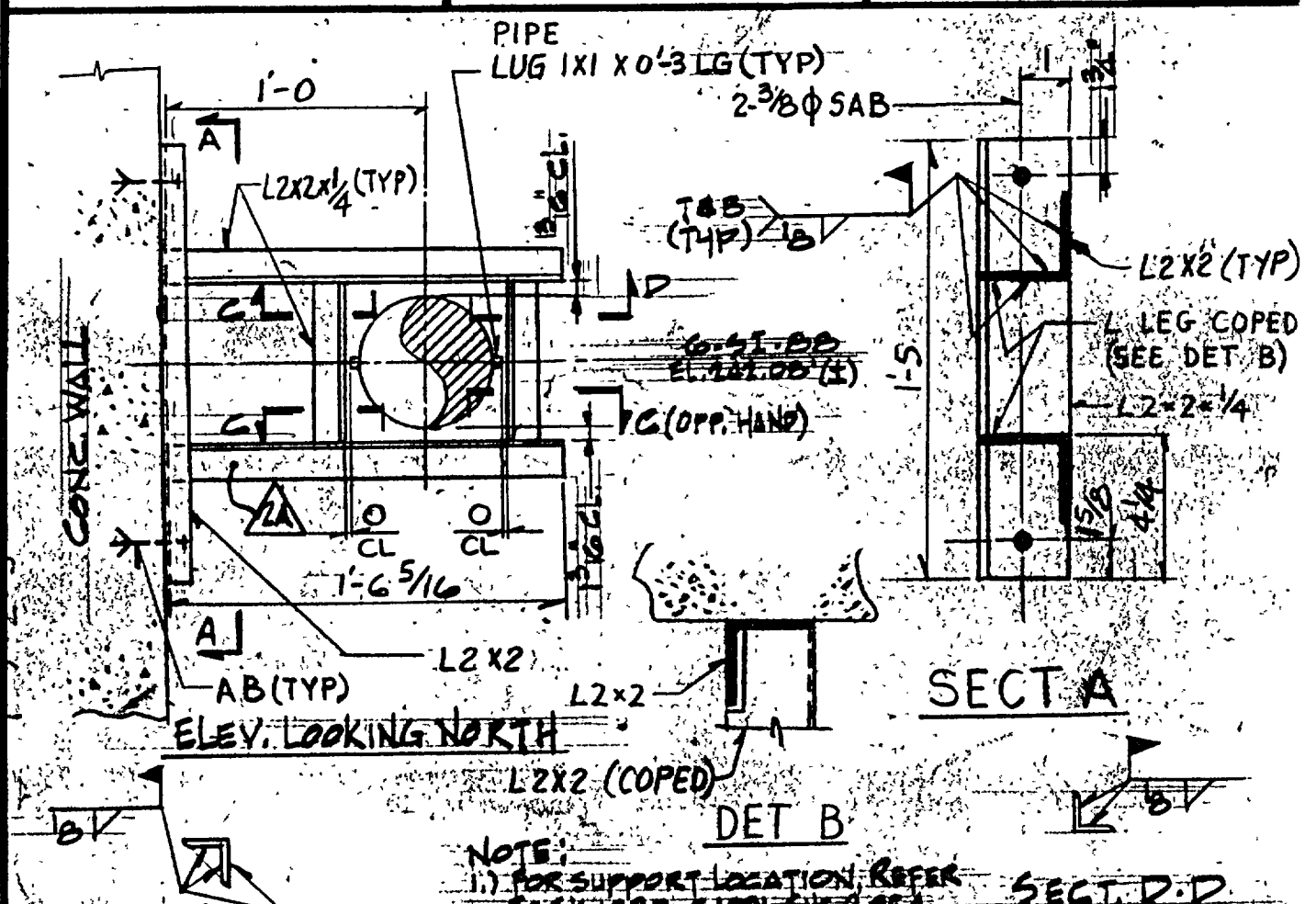

NOTE:
1.) FOR SUPPORT LOCATION REFER TO SK-1087-C-1001, SHT. 2 OF 4.
2.) REV. 3 ADDS AS BUILT WELDS.

(FOR ORIENTATION, SEE ELEVATION ABOVE.)

NUCLEAR SAFETY RELATED

REV. 1 INCORPORATES "AS-BUILT" CONDITION

REV	DATE	BY	CHK	APPR
3	12/27/94	JA	RS	[illegible]
2	4/9/86	JB	RS	[illegible]
1	6/25/85	RB	HSW	[illegible]

EBASCO SERVICES INCORPORATED

DIV. CIVIL DR. To
DATE 9-6-84 CH. JG
SCALE NTS JM

APPROVED
JC RS

H.B. ROBINSON - UNIT 2
AS-BUILT RESTRAINT SKETCH
SYSTEM: SAFETY INJECTION
ISO NO./POINT NO. SI-20/944

AB-CAR-SI-20-944
SH. 1 OF 1

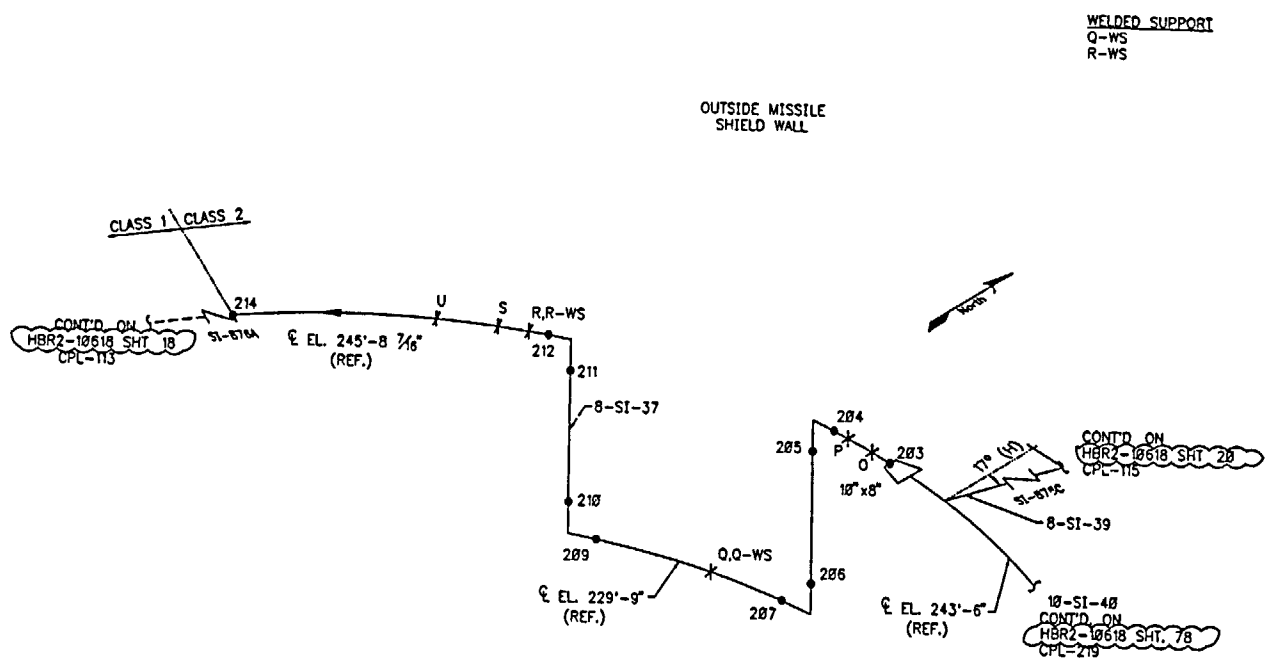

NOTES:

1 ⟶ DATUM POINT REFERENCE

REF. DWGS.
C-190267
5379-1082 SHT. 4
SK-1164-C-1011

REV	DATE	DESCRIPTION	DWN	DSN	CHK	DV	DPC	DPE
2	1/26/95	PER DCR 95-1661, PM-1164	AJP	A	R/C	JWV	R/J	JP
1	4/10/93	This drawing has been redrawn in CAD and reflects the current as-built condition. DCR 93-888	JP	BHE	BHE	BHB	BLD	BPP

PROFESSIONAL ENGINEER

QUALITY LEVEL: SAFETY RELATED

CAROLINA POWER & LIGHT COMPANY
NUCLEAR ENGINEERING DEPARTMENT

CP&L

PLANT: ROBINSON NUCLEAR PROJECT - UNIT 2

SCALE: NONE

TITLE: INSERVICE INSPECTION DRAWING
SIS & RHR RETURN
LINE NO 8-SI-37
CPL-219A

PLANT DWG NO.: HBR2-10618 REV 2 SHT. 79 OF. 164

MOD. SKETCH NO.:

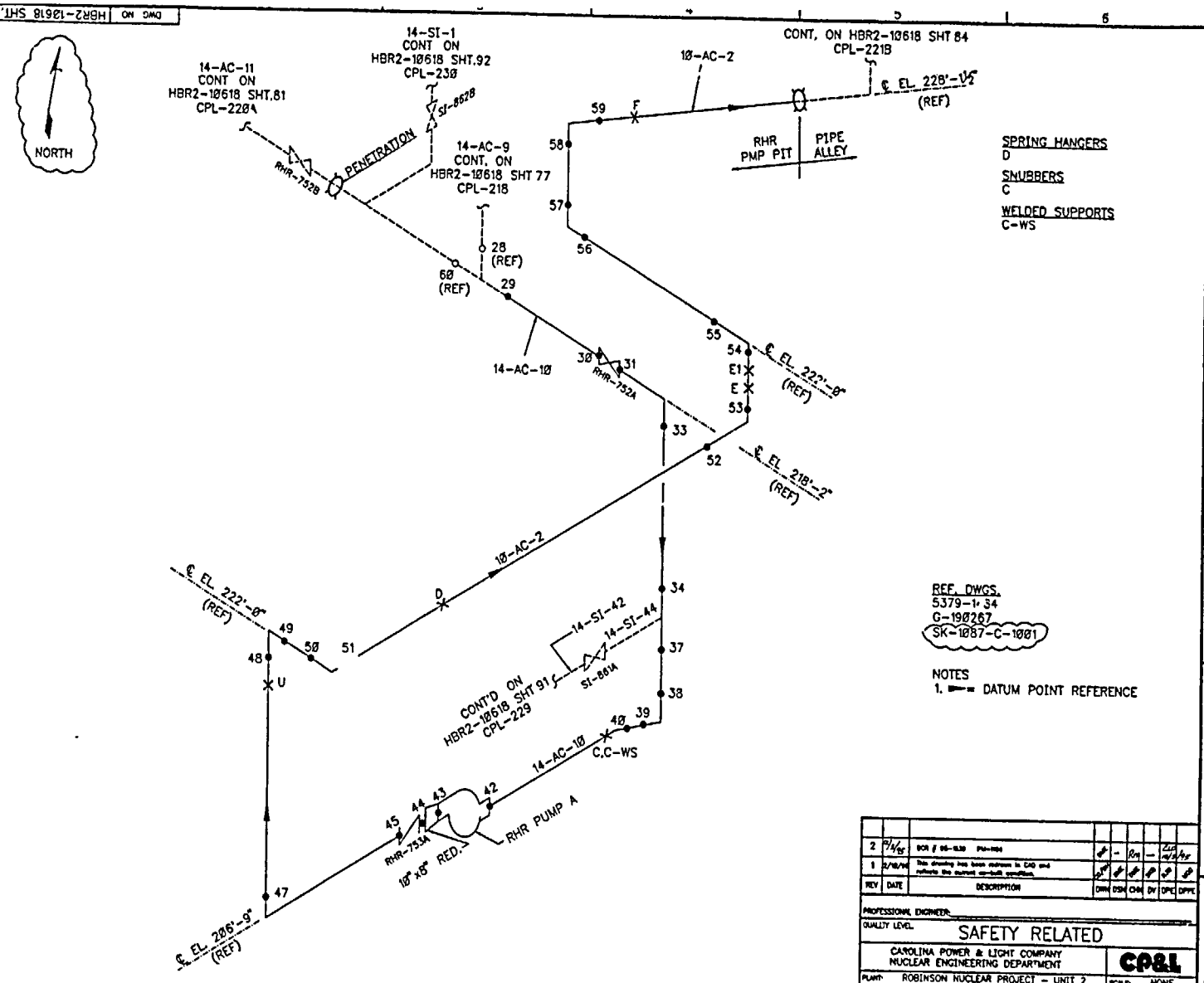
DWG NO HBR2-10618 SHT. 80
NORTH
14-AC-11
CONT ON
HBR2-10618 SHT.81
CPL-228
14-SI-1
CONT ON
HBR2-10618 SHT.92
CPL-230
SI-862B
RHR-732B
PENETRATION
14-AC-9
CONT. ON
HBR2-10618 SHT 77
CPL-218
28
(REF)
60
(REF)
29
14-AC-10
30
31
RHR-752A
10-AC-2
CONT, ON HBR2-10618 SHT 84
CPL-221B
℄ EL. 228'-1½"
(REF)
59
F
58
57
56
RHR
PMP PIT
PIPE
ALLEY
55
54
E1
E
53
℄ EL. 222'-0"
(REF)
33
52
℄ EL. 218'-2"
(REF)
10-AC-2
D
34
14-SI-42
14-SI-44
37
SI-861A
38
CONT'D ON
HBR2-10618 SHT 91
CPL-229
40
39
14-AC-10
C,C-WS
42
43
44
45
RHR PUMP A
RHR-753A
10" x 8" RED.
℄ EL. 222'-0"
(REF)
49
50
51
48
U
47
℄ EL. 206'-9"
(REF)
SPRING HANGERS
D
SNUBBERS
C
WELDED SUPPORTS
C-WS
REF. DWGS.
5379-1, 34
G-190267
SK-1087-C-1001
NOTES
1. DATUM POINT REFERENCE
REV
DATE
DESCRIPTION
DWN
DSN
CKD
DV
OPC
DPC
PROFESSIONAL ENGINEER
QUALITY LEVEL
SAFETY RELATED
CAROLINA POWER & LIGHT COMPANY
NUCLEAR ENGINEERING DEPARTMENT
CP&L
PLANT
ROBINSON NUCLEAR PROJECT - UNIT 2
SCALE: NONE
TITLE:
INSERVICE INSPECTION DRAWING
LOOP 1 - 14" RESIDUAL HEAT REMOVAL
LINE NOS 10-AC-2, 14-AC-10
CPL-220
PLANT DWG NO.: HBR2-10618
REV: 2
SHT: 80 OF 164
MOD SKETCH NO.:
SHT: OF:

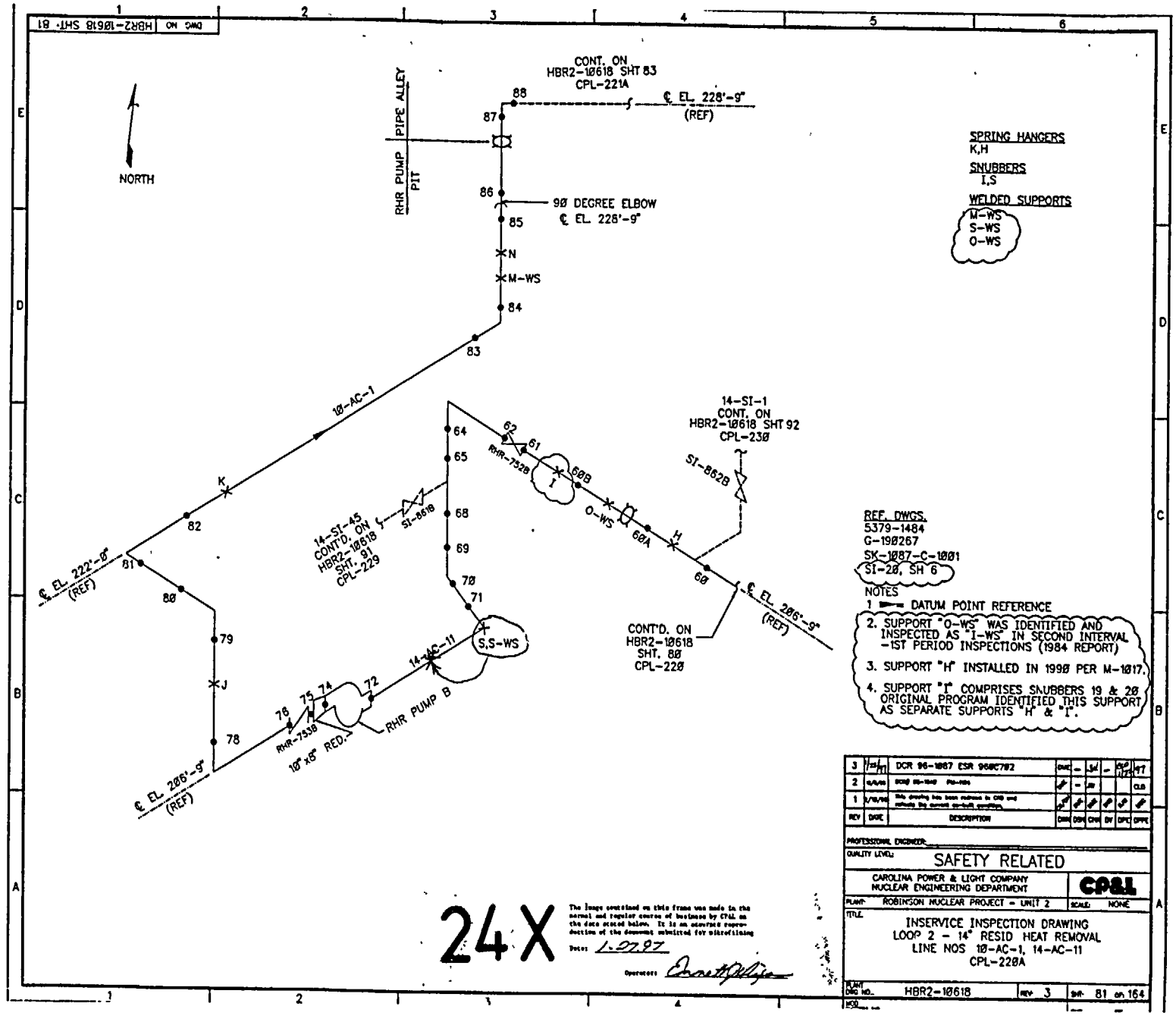
DWG NO HBR2-10618 SHT. 81
NORTH
CONT. ON
HBR2-10618 SHT 83
CPL-221A
PIPE ALLEY
RHR PUMP PIT
℄ EL. 228'-9"
(REF)
90 DEGREE ELBOW
℄ EL. 228'-9"
88
87
86
85
N
M-WS
84
83
10-AC-1
K
82
81
℄ EL. 222'-0"
(REF)
80
79
J
78
℄ EL. 206'-9"
(REF)
14-SI-45
CONT'D. ON
HBR2-10618
SHT. 91
CPL-229
SI-861B
64
65
68
69
70
71
RHR-752B
62
61
I
60B
O-WS
60A
H
60
14-SI-1
CONT. ON
HBR2-10618 SHT 92
CPL-230
SI-862B
℄ EL. 206'-9"
(REF)
CONT'D. ON
HBR2-10618
SHT. 80
CPL-220
S,S-WS
14-AC-11
72
74
75
76
RHR-753B
10"x8" RED.
RHR PUMP B
SPRING HANGERS
K,H
SNUBBERS
I,S
WELDED SUPPORTS
M-WS
S-WS
O-WS
REF. DWGS.
5379-1484
G-190267
SK-1087-C-1001
SI-20, SH 6
NOTES
1 DATUM POINT REFERENCE
2. SUPPORT "O-WS" WAS IDENTIFIED AND INSPECTED AS "I-WS" IN SECOND INTERVAL -1ST PERIOD INSPECTIONS (1984 REPORT)
3. SUPPORT "H" INSTALLED IN 1990 PER M-1017.
4. SUPPORT "I" COMPRISES SNUBBERS 19 & 20 ORIGINAL PROGRAM IDENTIFIED THIS SUPPORT AS SEPARATE SUPPORTS "H" & "I".
3 DCR 96-1087 ESR 96BC782
2
1
REV DATE DESCRIPTION
PROFESSIONAL ENGINEER
QUALITY LEVEL: SAFETY RELATED
CAROLINA POWER & LIGHT COMPANY
NUCLEAR ENGINEERING DEPARTMENT
CP&L
PLANT: ROBINSON NUCLEAR PROJECT - UNIT 2
SCALE: NONE
TITLE
INSERVICE INSPECTION DRAWING
LOOP 2 - 14" RESID HEAT REMOVAL
LINE NOS 10-AC-1, 14-AC-11
CPL-220A
PLANT DWG NO. HBR2-10618
REV 3
SHT. 81 OF 164
24X
The image contained on this frame was made in the normal and regular course of business by CP&L on the date stated below. It is an accurate reproduction of the document submitted for microfilming
Date: 1.27.97
Operator:

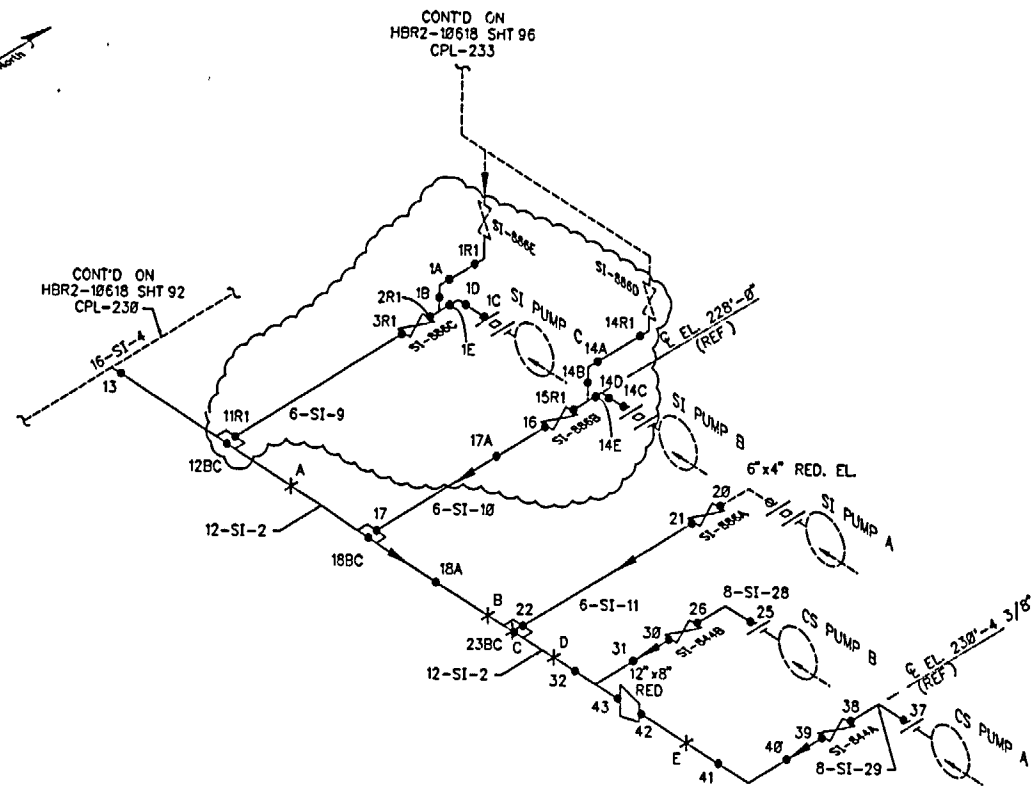

REF. DWGS.
G-190281
G-190282
5379-1082 SHTS 2 & 3
SK-1087-C-1001

NOTES:
1 ▶ = DATUM POINT REFERENCE
2 BC = BRANCH CONNECTION

REV	DATE	DESCRIPTION	DRN	DSN	CHK	DV	DPE	DPPE
4	7/21/97	DCR 96-190 ESR 97006300	DME	–	ETP	–	CAD 31	1/98
3	12/5/95	DCR 95-1040 PM-1164	DME	–	RM	–	CLG	
2	2/16/94	This drawing has been redrawn in CAD and reflects the current as-built condition.	DME	BHC	DME	SHB	RJM	MRC

PROFESSIONAL ENGINEER:

QUALITY LEVEL: SAFETY RELATED

CAROLINA POWER & LIGHT COMPANY
NUCLEAR ENGINEERING DEPARTMENT

CP&L

PLANT: ROBINSON NUCLEAR PROJECT - UNIT 2

SCALE: NONE

TITLE: INSERVICE INSPECTION DRAWING
SI & CS PUMP SUCTION
LINE NOS. 12-SI-2, 8-SI-28,
8-SI-29, 6-SI-9, 6-SI-10, 6-SI-11
CPL-231

PLANT DWG NO.: HBR2-10618 REV: 4 SHT: 93 OF 164

DWG NO. HBR2-10618 SHT 93

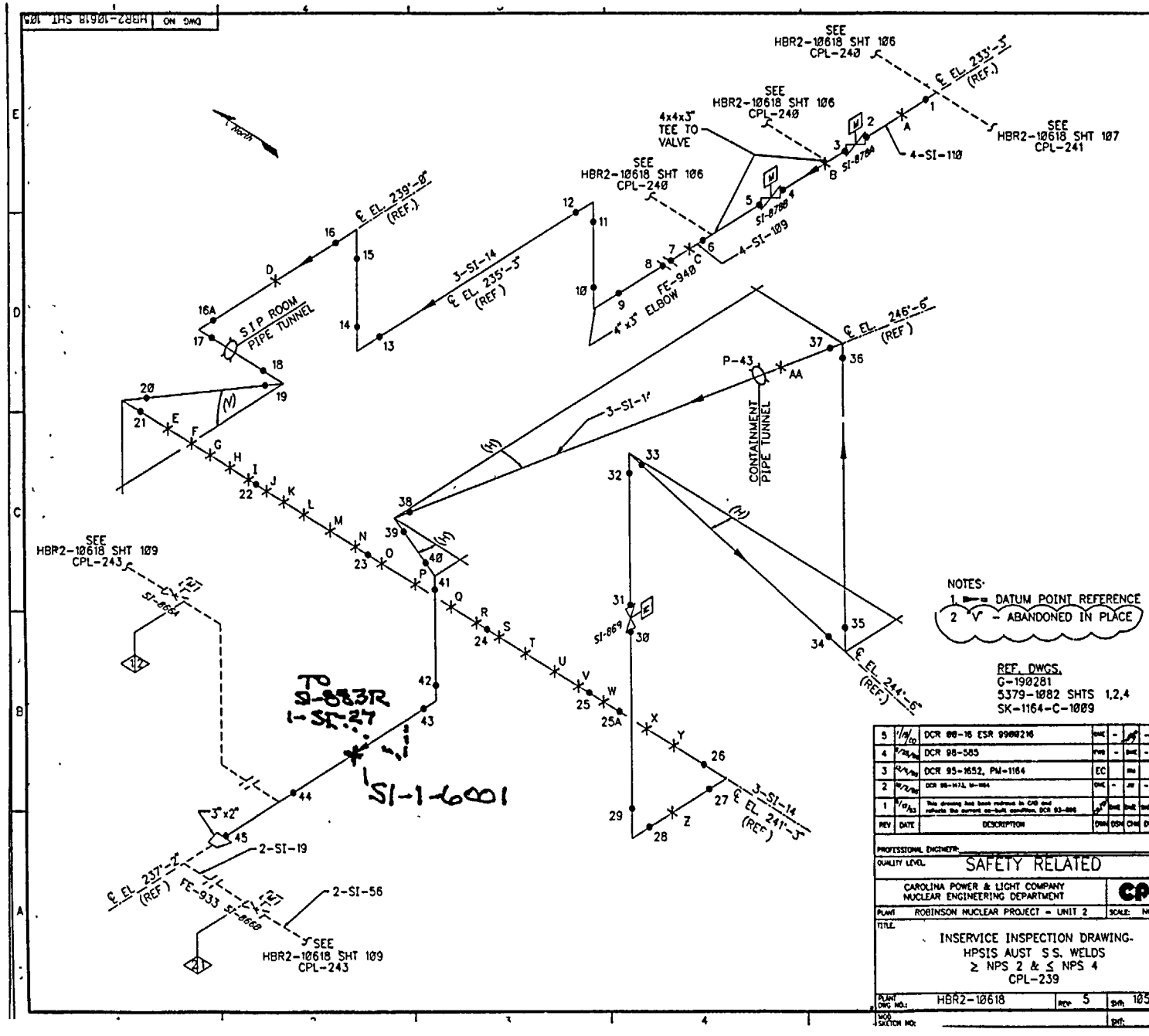
DWG NO HBR2-10618 SHT 105
SEE HBR2-10618 SHT 106 CPL-240
℄ EL. 233'-3" (REF.)
SEE HBR2-10618 SHT 107 CPL-241
4x4x3" TEE TO VALVE
4-SI-110
SI-8784
4-SI-109
SI-8785
℄ EL. 239'-8" (REF.)
3-SI-14
℄ EL. 235'-3" (REF)
FE-940
4"x3" ELBOW
S.I.P. ROOM PIPE TUNNEL
℄ EL. 246'-6" (REF)
P-43
CONTAINMENT PIPE TUNNEL
3-SI-1'
SEE HBR2-10618 SHT 109 CPL-243
SI-8664
TO SI-883R 1-SI-27
SI-1-6001
SI-869
℄ EL. 244'-6" (REF)
℄ EL. 241'-3" (REF)
3"x2"
2-SI-19
℄ EL. 237'-2" (REF)
FE-933
SI-8660
2-SI-56
NOTES:
1. ⟶ = DATUM POINT REFERENCE
2. 'V' - ABANDONED IN PLACE
REF. DWGS.
G-190281
5379-1082 SHTS 1,2,4
SK-1164-C-1009
REV DATE DESCRIPTION
5 DCR 88-16 ESR 99000216
4 DCR 98-585
3 DCR 95-1652, PM-1164
2 DCR 88-1472, M-1164
1 This drawing has been redrawn in CAD and reflects the current as-built condition. DCR 93-896
PROFESSIONAL ENGINEER
QUALITY LEVEL SAFETY RELATED
CAROLINA POWER & LIGHT COMPANY
NUCLEAR ENGINEERING DEPARTMENT
CP&L
PLANT ROBINSON NUCLEAR PROJECT - UNIT 2
SCALE: NONE
TITLE
INSERVICE INSPECTION DRAWING-
HPSIS AUST S.S. WELDS
≥ NPS 2 & ≤ NPS 4
CPL-239
PLANT DWG NO.: HBR2-10618
REV. 5
SHT. 105 OF 164
WOO SKETCH NO:

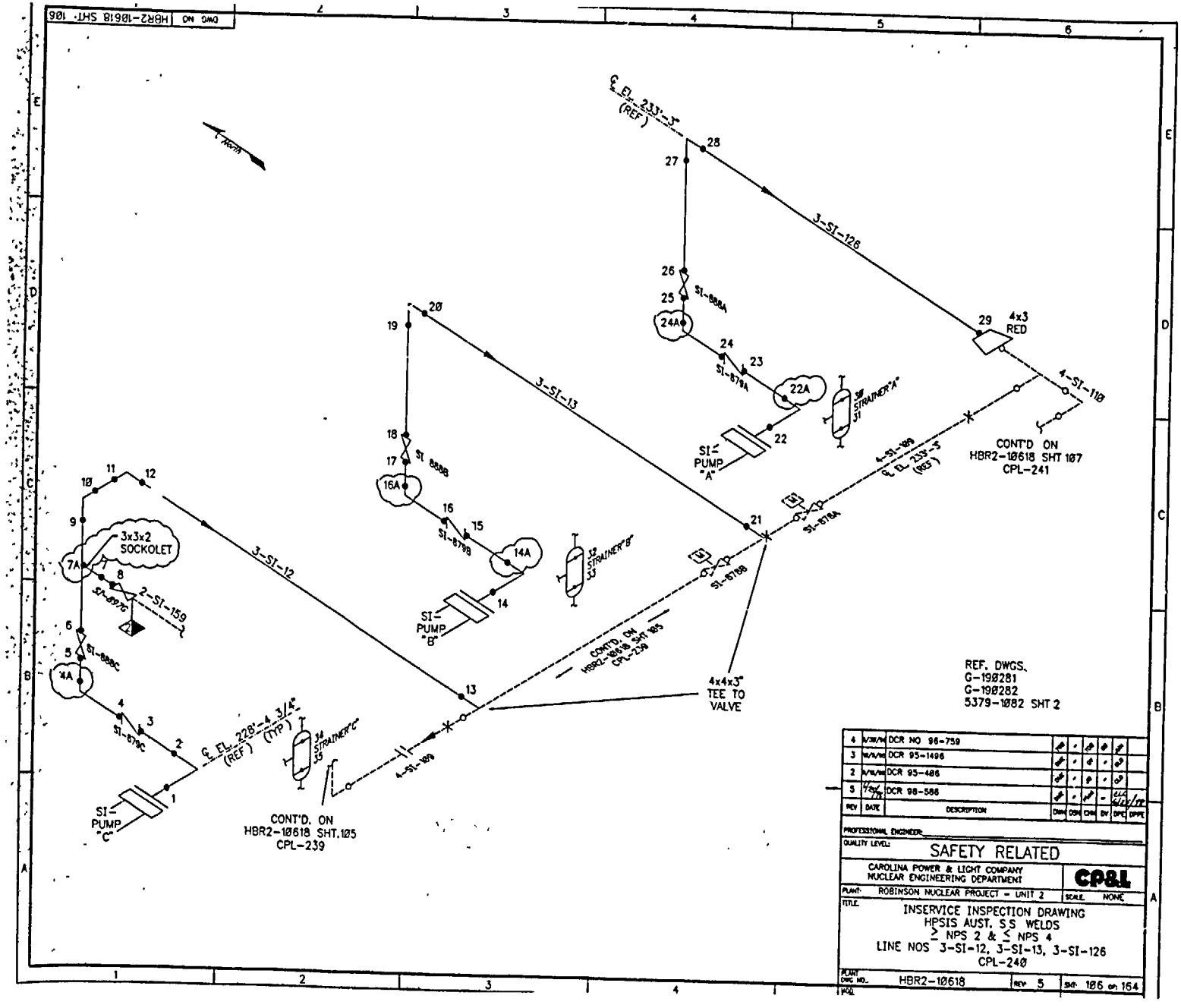
DWG NO HBR2-10618 SHT. 106
NORTH
℄ EL. 233'-3" (REF)
3-SI-126
3-SI-13
3-SI-12
4-SI-110
4-SI-109
2-SI-159
4-SI-109
3x3x2 SOCKOLET
4x3 RED
4x4x3" TEE TO VALVE
SI-PUMP "A"
SI-PUMP "B"
SI-PUMP "C"
SI STRAINER "A"
SI STRAINER "B"
SI STRAINER "C"
SI-8888
SI-8798
SI-8708
SI-8888A
SI-8798A
SI-8708A
SI-8888C
SI-8708C
SI-8708B
SI-8708A
℄ EL. 228'-4 3/4" (REF) (TYP)
CONT'D ON HBR2-10618 SHT 107 CPL-241
CONT'D ON HBR2-10618 SHT.105 CPL-239
CONT'D. ON HBR2-10618 SHT.105 CPL-239
REF. DWGS.
G-190281
G-190282
5379-1082 SHT 2
4 DCR NO 96-759
3 DCR 95-1496
2 DCR 95-486
1 DCR 98-586
REV DATE DESCRIPTION DWN DSN CHK DV DFC DPE
PROFESSIONAL ENGINEER
QUALITY LEVEL: SAFETY RELATED
CAROLINA POWER & LIGHT COMPANY
NUCLEAR ENGINEERING DEPARTMENT
CP&L
PLANT: ROBINSON NUCLEAR PROJECT - UNIT 2
SCALE: NONE
TITLE: INSERVICE INSPECTION DRAWING
HPSIS AUST. SS WELDS
≥ NPS 2 & ≤ NPS 4
LINE NOS 3-SI-12, 3-SI-13, 3-SI-126
CPL-240
PLANT DWG NO. HBR2-10618
REV 5
SHT 106 OF 164

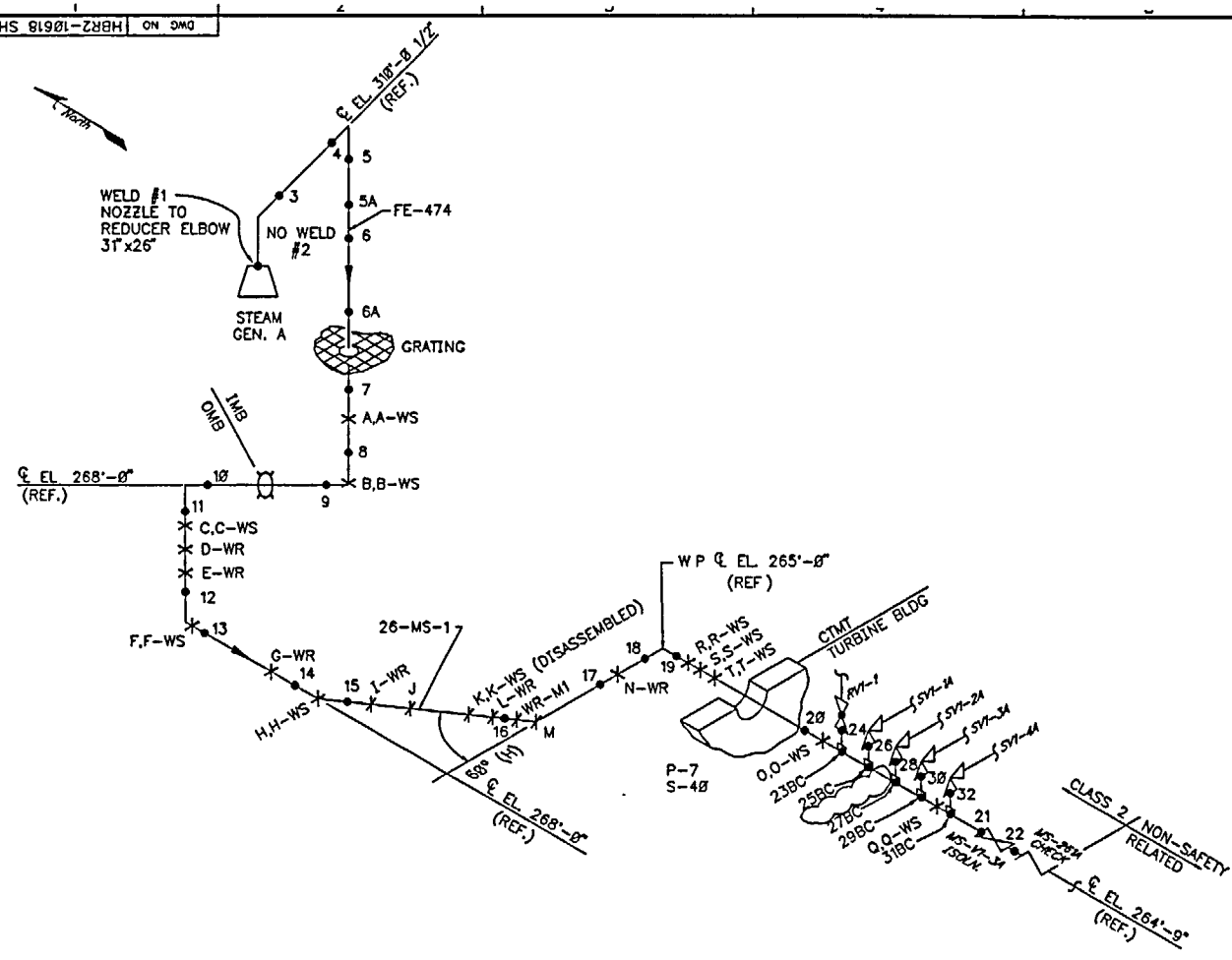

SPRING HANGERS
B,C,H,J,M

WELDED SUPPORT
A-WS Q-WS
B-WS R-WS
F-WS S-WS
O-WS T-WS
P-WS
C-WS
H-WS
K-WS

REF. DWGS.
G-190206
G-190207
G-190196 SHT. 1

NOTES.
1. ▶— DATUM POINT REFERENCE
2. BC = BRANCH CONNECTION
3. WR = WHIP RESTRAINT
4. IMB = INSIDE MISSILE BARRIER
5 OMB = OUTSIDE MISSILE BARRIER

REV	DATE	DESCRIPTION	DRN	DSN	CHK	DV	DPE	DPPE
3	9/8/01	DCR 01-034, ESR 98-00416	JLW	-	ESV	-	CLA 9/8/01	
2	3/13/98	DCR 95-1772	SMC	-	SY	-	CJO 3/13/98	
1	2/9/95	This drawing has been redrawn in CAD and reflects the current as-built condition.	[illegible]	DMC	CMC	SKB	RJW	MKC

PROFESSIONAL ENGINEER:

QUALITY LEVEL: SAFETY RELATED

CAROLINA POWER & LIGHT COMPANY
NUCLEAR ENGINEERING DEPARTMENT

CP&L

PLANT: ROBINSON NUCLEAR PROJECT - UNIT 2

SCALE: NONE

TITLE:
INSERVICE INSPECTION DRAWING
LOOP 1 - 26" MAIN STEAM
LINE NO 26"-MS-1
CPL-212

PLANT DWG NO.: HBR2-10618 REV: 3 SHT: 71

MOD SKETCH NO: SHT: OF:

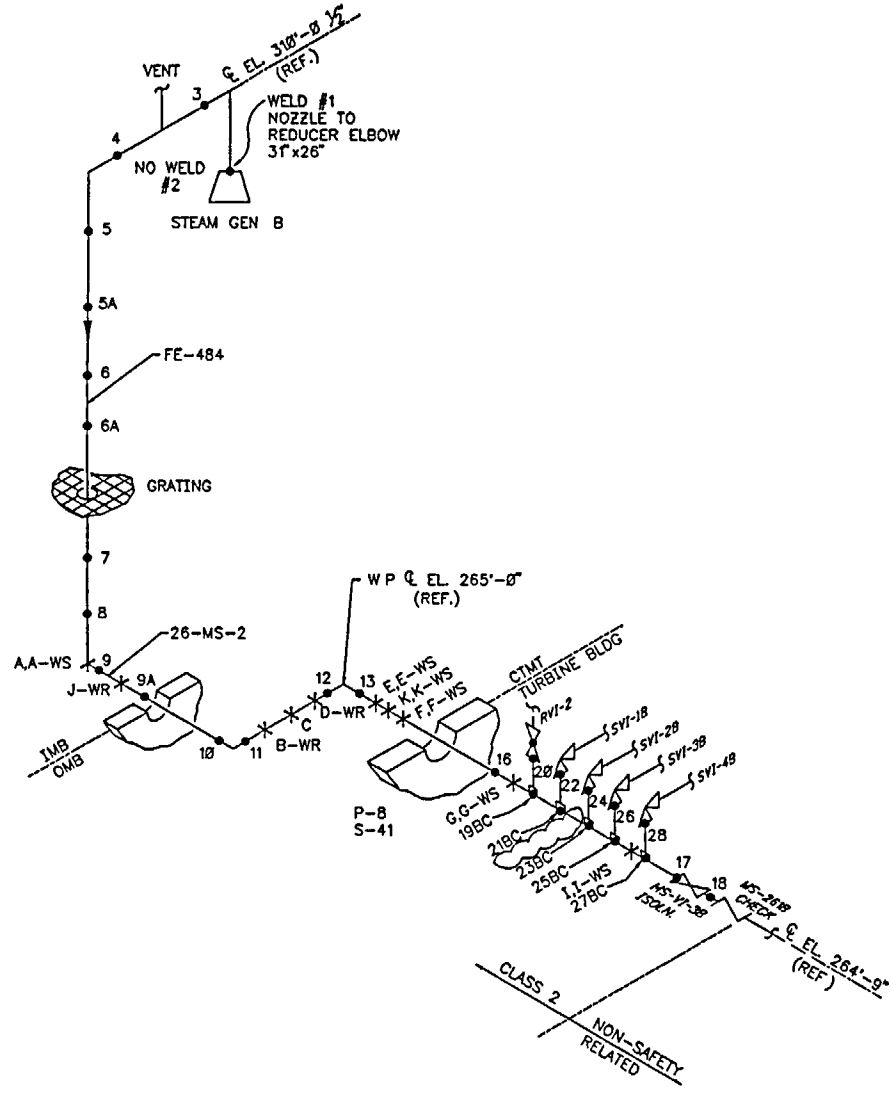

SPRING HANGERS
A,C

WELDED SUPPORT
A-WS H-WS
E-WS I-WS
F-WS K-WS
G-WS

NOTES:
1. ▬► DATUM POINT REFERENCE
2. WR = WHIP RESTRAINT
3. BC = BRANCH CONNECTION

REF. DWGS
G-190206, 207
G-190196 SHT. 1

REV	DATE	DESCRIPTION	DRN	DSN	CHK	DV	DPE	DPPE
3	8/8/01	DCR 01-025, CSR 98-00416	ALH	-	[illegible]	-	CJA 8/8/01	CI
2	3/18/98	DCR 96-1773	DME	-	BY	-	CLG 3/18/98	
1	4/18/93	This drawing has been redrawn in CAD and reflects the current as-built condition, DCR 93-000	[illegible]	DME	DME	SWG	BLB	WFP

PROFESSIONAL ENGINEER: _____

QUALITY LEVEL: SAFETY RELATED

CAROLINA POWER & LIGHT COMPANY
NUCLEAR ENGINEERING DEPARTMENT

CP&L

PLANT: ROBINSON NUCLEAR PROJECT - UNIT 2

SCALE: NONE

TITLE:

INSERVICE INSPECTION DRAWING
LOOP B 26" MAIN STEAM
LINE NO. 26-MS-2
CPL-213

PLANT DWG NO. HBR2-10618 REV. 3 SHT. 72

DWG NO HBR2-10618 SHT 73

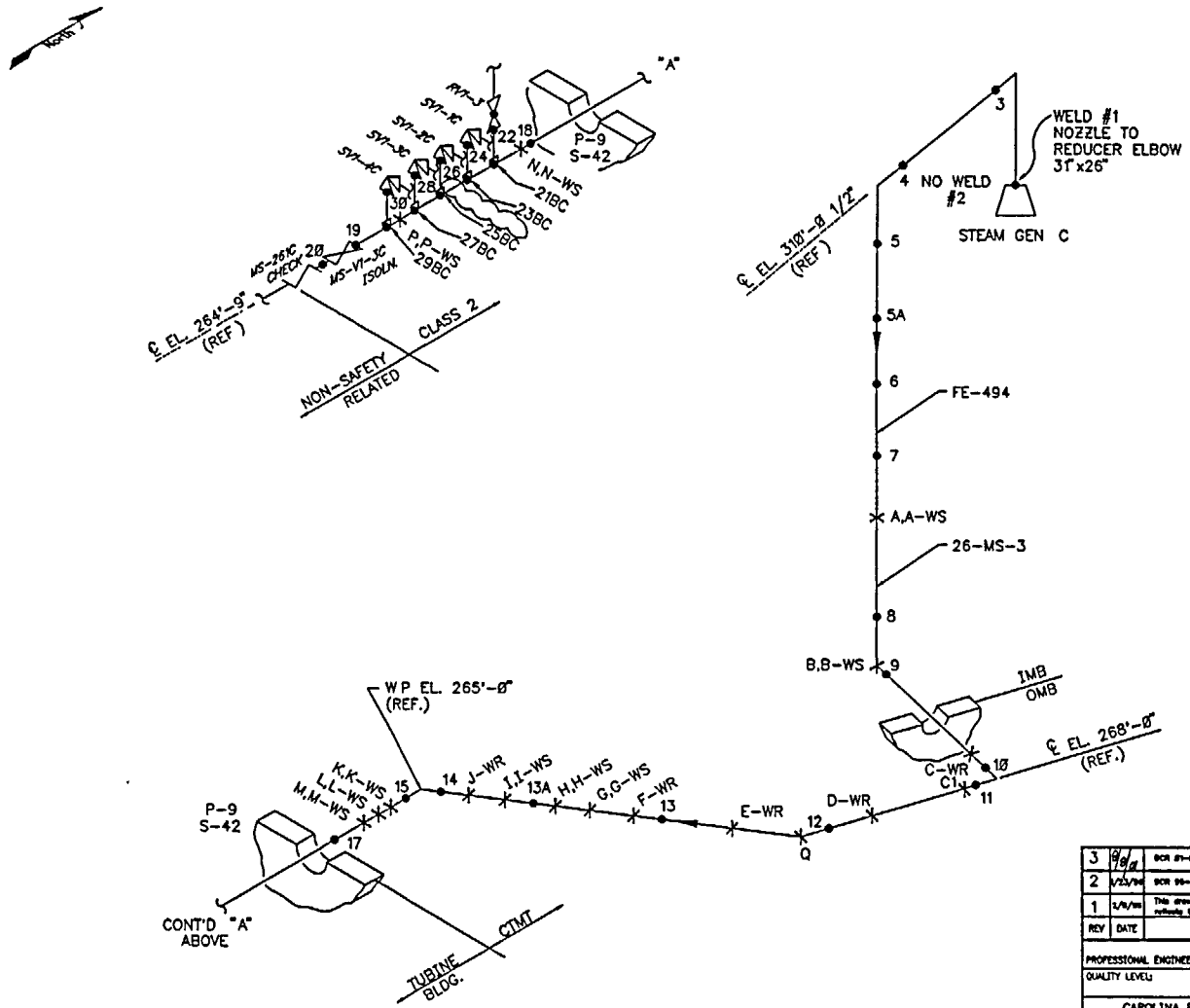

SPRING HANGERS
B,G,I,Q,C1

WELDED SUPPORT
A-WS M-WS
B-WS N-WS
H-WS O-WS
K-WS P-WS
L-WS G-WS
I-WS

REF. DWGS.
G-190206, 207
G-190196 SHT. 1

NOTES:
1 ▬ = DATUM POINT REFERENCE
2. BC = BRANCH CONNECTION
3. WR = WHIP RESTRAINT
4. IMB = INSIDE MISSILE BARRIER
5. OMB = OUTSIDE MISSILE BARRIER

REV	DATE	DESCRIPTION	DWN	DSN	CHK	DV	DPE	DPPE
3	8/8/01	SCR 01-006, ESR 98-00416	JLF	-	[illegible]	-	CLD 8/8/01	
2	1/23/96	SCR 96-0774	SMC	-	SV	-	CLD 1/23/96	
1	1/9/96	This drawing has been redrawn in CAD and reflects the current as-built condition.	[illegible]	DMC	DMC	SMB	JLW	SMB

PROFESSIONAL ENGINEER:

QUALITY LEVEL: SAFETY RELATED

CAROLINA POWER & LIGHT COMPANY
NUCLEAR ENGINEERING DEPARTMENT

CP&L

PLANT: ROBINSON NUCLEAR PROJECT - UNIT 2

SCALE: NONE

TITLE:
INSERVICE INSPECTION DRAWING
LOOP 3 - 26" MAIN STEAM
LINE NO. 26"-MS-3
CPL-214

PLANT DWG NO.: HBR2-10618 REV 3 SHT 73

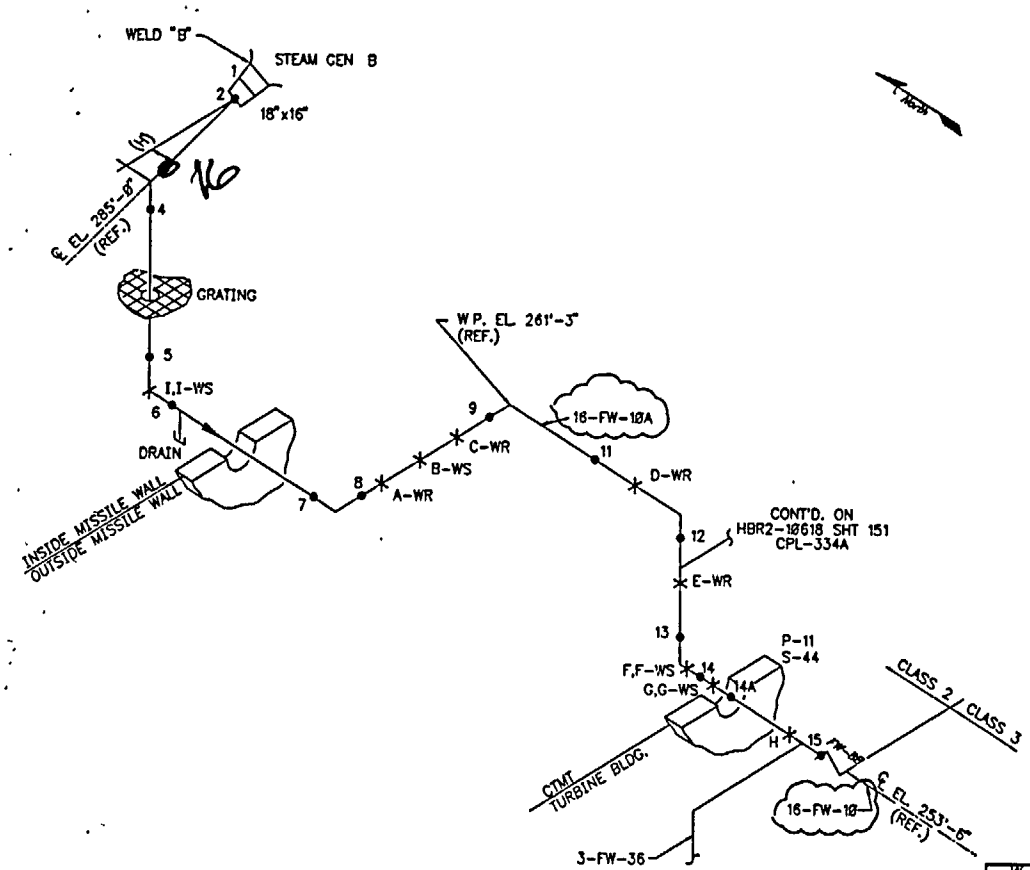

SPRING SUPPORT
B,I

WELDED SUPPORT
I-WS
F-WS
G-WS
B-WS

NOTES.
1. ► = DATUM POINT REFERENCE
2 WR = WHIP RESTRAINT

REF. DWGS.
G-190206
G-190207
G-190197 SHT. 4

REV	DATE	DESCRIPTION	DRN	DSN	CHK	DV	DPE	DPPE
4	11/20/00	DCR: 00-368 ESR 00-00141	PWD	–	EVF	–	CMD	
3	3/3/98	DCR: 98-162 ESR 95-01006	PWD	–	JPI	–	DHF	
2	10/5/95	DCR 95-1493	DMC	–	GY	–	CLG	
1	5/17/93	This drawing has been redrawn in CAD and reflects the current as-built condition.	DMC	DMC	DHG	GLG	WFF	

PROFESSIONAL ENGINEER:

QUALITY LEVEL: SAFETY RELATED

CAROLINA POWER & LIGHT COMPANY
NUCLEAR ENGINEERING DEPARTMENT

CP&L

PLANT: ROBINSON NUCLEAR PROJECT – UNIT 2 | SCALE: NONE

TITLE:
INSERVICE INSPECTION DRAWING
LOOP B 16"
FEEDWATER
LINE NO. 16-FW-10
CPL-216

PLANT DWG NO.: HBR2-10618 | REV: 4 | SHT: 75 of 164

NOZ. SECTION NO.: | SHT: OF

DWG. NO. HBR2-10618 SHT 75