SOUTHERN CALIFORNIA
EDISON
An EDISON INTERNATIONAL℠ Company

Dwight E. Nunn
Vice President

February 7, 2003

U. S. Nuclear Regulatory Commission
Document Control Desk
Washington, DC 20555

Subject: **Docket No. 50-362**
Special Report: Inservice Inspection of Steam Generator Tubes, Cycle 12
San Onofre Nuclear Generating Station, Unit 3

Reference: Steam Generator Program Guidelines, Nuclear Energy Institute Document Number NEI 97-06, Revision 1

Gentlemen:

On January 26, 2003, Southern California Edison (SCE) completed the inservice inspection of steam generator tubes at San Onofre Nuclear Generating Station Unit 3. The attached report is submitted in accordance with Technical Specification (TS) 5.7.2.c reporting requirements:

- Report the number of tubes plugged in each steam generator within 15 days of completing the inspection.
- Report the complete results of steam generator tube inspections within 12 months of inspection completion.

The attachment to this letter, "Special Report – Inservice Inspection of Steam Generator Tubes," which was prepared in accordance with the referenced industry guidance, satisfies these reporting requirements. The report contains no new commitments.

If you require any additional information, please advise.

Sincerely,

Attachments:

cc: E. W. Merschoff, Regional Administrator, NRC Region IV
B. M. Pham, NRC Project Manager, San Onofre Units 2 & 3
C. C. Osterholtz, NRC Senior Resident Inspector, San Onofre Units 2 & 3
Institute of Nuclear Power Operations (INPO)

A047

P O Box 128
San Clemente, CA 92674-0128
949-368-1480
Fax 949-368-1490

SPECIAL REPORT - INSERVICE INSPECTION OF STEAM GENERATOR TUBES

Regulatory Reporting Requirements

Reporting Requirement 5.7.2.c of Appendix A, Technical Specification to Facility Operating License NPF-15, requires the number of tubes plugged and tubes sleeved in each steam generator to be reported to the Nuclear Regulatory Commission within 15 days following completion of the inspection.

Reporting Requirement 5.7.2.c of Appendix A, Technical Specification to Facility Operating License NPF-15, requires the complete results of steam generator tube inspections to be reported to the Nuclear Regulatory Commission within 12 months following completion of the inspection.

Planned Inspection Scope

Table 1 summarizes the planned inspection program. Also, when indications by the bobbin probe were non-quantifiable or distorted, the inspection program included inspection with the Plus-Point Probe. Table 3 provides the list of Nondestructive Examination (NDE) techniques utilized for each degradation mechanism.

Inspection Scope Expansion

Table 2 summarizes the only significant inspection program scope expansion in response to inspection results. The expanded scope inspected the U-bend region of all Row 4 tubes in both steam generators. All tubes were inspected with both mid-range and high-range frequency Plus-Point Probes.

Results

This report satisfies the listed regulatory reporting requirements.

The contents of this report were prepared using the guidance contained in NEI 97-06, Rev. 1, "Steam Generator Program Guidelines." The NEI guidance is an initiative to unify the industry approach towards steam generator issues and strengthen, where necessary, the steam generator program.

Table 4 summarizes the number of tubes repaired, and active degradation mechanisms found. Each tube is only counted once in this listing, although it may also have an eddy current indication of a type below the point in the listing where it appears. The Appendices provide the complete results of the steam generator tubing inservice inspection.

Table 5 summarizes in-situ pressure and leak testing results. This particular testing demonstrated the structural and leakage (i.e., there was no leakage) integrity of the tested tubes consistent with EPRI guidelines and recent industry guidance.[1] Eddy current testing results and in-situ pressure and leak testing results (Condition Monitoring) provide assurance that performance criteria in the NEI guidance (structural integrity and accident-induced leakage) were met during operation prior to this inspection.

---

[1] Letter from Lawrence F. Womack (Pacific Gas and Electric Company) to Steam Generator Management Program Utility Steering Committees, et. al , "Steam Generator Management Program (SGMP) Interim Guidelines on In Situ Pressure Testing of Steam Generator Tubes," dated October 13, 2000.

Repair of Tubes

Table 4 lists the number of tubes repaired by plugging for each steam generator. The sleeving repair method has never been used at Unit 3.

Table 6 provides an itemized listing of the tubes plugged in steam generator E-088 along with the corresponding Table 4 category specifying the indication orientation/location.

Table 7 provides an itemized listing of tubes plugged in steam generator E-089 along with the corresponding Table 4 category specifying the indication orientation/location.

Repair Methods, Number of Tubes Repaired and Effective Plugging Percentage

All tube plugging was performed using the design, materials, and installation methods of FRAMATOME-ANP (FANP). A "roll" method was used for all tube plugs. Nine tubes in Steam Generator E-088 and five tubes in Steam Generator E-089 were "stabilized" in the vicinity of the top of the tubesheet using the design, materials, and installation methods of FANP.

Seventy-two tubes were plugged in Steam Generator E-088 during the Cycle 12 refueling outage. A total of 658 tubes have been plugged. The design number of tubes is 9350 and no tubes have ever been sleeved in this steam generator. The effective plugging percentage for E-088 is 7.1%.

Sixty-seven tubes were plugged in Steam Generator E-089 during the Cycle 12 refueling outage. A total of 589 tubes have been plugged. The design number of tubes is 9350 and no tubes have ever been sleeved in this steam generator. The effective plugging percentage for E-089 is 6.3%.

Description of Tables and Appendices

Table 1 -	Summary of the Planned Inspection Program for the Unit 3 Cycle 12 (U3C12) Refueling Outage
Table 2 -	Summary of Significant Scope Expansions for the Unit 3 Cycle 12 (U3C12) Refueling Outage
Table 3 -	List of Nondestructive Examination (NDE) Techniques Utilized for Each Degradation Mechanism for the U3C12 Refueling Outage
Table 4 -	Number of Tubes Repaired and Active Degradation Mechanisms Found During the U3C12 Refueling Outage
Table 5 -	Summary of Results of In-Situ Pressure and Leak Testing for the U3C12 Refueling Outage
Table 6 -	U3C12 Refueling Outage Tubes Plugged, Steam Generator E-088
Table 7 -	U3C12 Refueling Outage Tubes Plugged, Steam Generator E-089
Appendix 1 -	Steam Generator Reference Information
Appendix 2 -	Legend for Appendices 3 and 4
Appendix 3 -	Inspection Summary, Steam Generator E-088
Appendix 4 -	Inspection Summary, Steam Generator E-089

TABLE 1 - Summary of the Planned Inspection Program for the Unit 3 Cycle 12 (U3C12) Refueling Outage

	Number of Tubes/Percentage of Tubes Steam Generator	
	E-088	E-089
Full length of tube with the Bobbin Probe (excluding U-bends for Rows 1-3)	8764 / 100%	8828 / 100%
Hot leg expansion transition at the top-of-tubesheet with the Plus-Point Probe	8764 / 100%	8828 / 100%
Cold leg expansion transition at the top-of-tubesheet with the Plus-Point Probe	2697 / 30%	2638 / 29%
U-bend regions of Rows 1, 2, and 3 with mid-range frequency Plus-Point Probes	187 / 100%	174 / 100%
U-bend regions of Rows 1, 2, and 3 with high-range frequency Plus-Point Probes	187 / 100%	174 / 100%
Plus-Point Probe examinations of tube support intersections with dents greater than, or equal to, 2 volts	315 / 100%	353 / 100%
Plus-Point Probe dings greater than, or equal to, 4 volts	376 / 100%	493 / 100%
Plus-Point Probe examination of all tube support intersections with quantified wear indications by the bobbin probe	948 / 100%	795 / 100%

TABLE 2 - Summary of Significant Scope Expansions for the Unit 3 Cycle 12 (U3C12) Refueling Outage

	Number of Tubes/Percentage of Tubes Steam Generator	
	E-088	E-089
U-bend regions of Row 4 with mid-range frequency Plus-Point Probes	64 / 100%	64 / 100%
U-bend regions of Row 4 with high-range frequency Plus-Point Probes	64 / 100%	64 / 100%

TABLE 3 – List of Nondestructive Examination (NDE) Techniques Utilized for Each Degradation Mechanism for the U3C12 Refueling Outage

Indication Orientation/Location	Probe Type for Detection	Probe Type for Characterization
Axially oriented ID (initiated on the inside-diameter of the tubing wall) indications at U-bends	Plus Point	Plus Point
Axially oriented OD (initiated on the outside-diameter of the tubing wall) indications not associated with a tube support (freespan)	Bobbin	Plus Point
Circumferentially oriented ID indications near or below the expansion transition at the top of the hot leg tubesheet	Plus Point	Plus Point
Circumferentially oriented OD indications near the expansion transition at the top of the hot leg tubesheet	Plus Point	Plus Point
Axially oriented ID indications near or below the expansion transition at the top of the hot leg tubesheet	Plus Point	Plus Point
Axially oriented ID indications below the hot leg top-of-tubesheet	Bobbin	Plus Point
Axially oriented OD indications in the sludge pile region near the top of the hot leg tubesheet	Plus Point	Plus Point
Indications of wear at tube support locations	Bobbin	Plus Point
Volumetric indications	Bobbin or Plus Point	Plus Point
Miscellaneous preventative plugging	Bobbin or Plus Point	Plus Point

TABLE 4 – Number of Tubes Repaired and Active Degradation Mechanisms Found During the U3C12 Refueling Outage

	Indication Orientation/Location	Steam Generator E-088	Steam Generator E-089
1	Tubes with axially oriented ID (initiated on the inside-diameter of the tubing wall) indications at U-bends (ID Axial @ U-bends)	1	0
2	Tubes with axially oriented OD indications not associated with a tube support (freespan) (OD Axial @ Freespan)	4	1
3	Tubes with circumferentially oriented ID indications near the expansion transition at the top of the hot leg tubesheet (ID Circ @ TSH)	6	2
4	Tubes with circumferentially oriented OD indications near the expansion transition at the top of the hot leg tubesheet (OD Circ @ TSH)	1	2
5	Tubes with axially oriented OD indications in the sludge pile region near the top of the hot leg tubesheet (OD Axial @ Sludge Pile TSH)	0	1
6	Tubes with axially oriented ID indications below the inlet top-of-tubesheet (ID Axial below TSH)	7	2
7	Tubes with circumferentially oriented ID indications below the inlet top-of-tubesheet (ID Circ below TSH)	2	1
8	Tubes with indications of wear at tube support locations (Wear @ Support)	45	58
9	Tubes with volumetric indications (OD Vol @ Miscellaneous)	2	0
10	Miscellaneous preventative plugging (not an active degradation mechanism) (Prevent @ Miscellaneous)	4	0
	Total	72	67

TABLE 5 – Summary of Results of In-situ Pressure and Leak Testing for the U3C12 Refueling Outage

Steam Generator E-088

TUBE AND EDDY CURRENT INFORMATION										IN-SITU TEST RESULTS			
REGION	TUBE INFORMATION			PLUS POINT DATA					COMMENTS	GPM @ NODP	GPM @ MSLB	GPM @ NODP POST MSLB	PRESSURE 3xNODP
	ROW	COL	LOCATION	LENGTH	VOLTS	Max Depth	PDA or Avg Depth	ORIENTATION					
U-BEND	3	1	DBH + 8 69	0 89	1.12	75	58 5 (AD)	ID AXIAL		0	0	0	4800

Steam Generator E-089

TUBE AND EDDY CURRENT INFORMATION										IN-SITU TEST RESULTS			
REGION	TUBE INFORMATION			PLUS POINT DATA					COMMENTS	GPM @ NODP	GPM @ MSLB	GPM @ NODP POST MSLB	PRESSURE 3xNODP
	ROW	COL	LOCATION	LENGTH	VOLTS	Max. Depth	PDA or Avg Depth	ORIENTATION					
TUBESHEET	31	123	TSH - 7 37	0 65	2 08	90%	58 7% (AD)	ID CIRC		0	0	0	4800
SUPPORT	54	90	DBC+1.89	4 07	3 03	68%	43.1% (AD)	OD VOL		0	0	0	4800

NOTES:

GPM = Gallons per Minute
NODP = Normal Operation Differential Pressure
MSLB = Main Steam Line Break Pressure Differential
OD = Degradation initiated on the outside diameter of the tubing
ID = Degradation initiated on the inside diameter of the tubing
PDA = Percent degraded area

TABLE 6 – SONGS U3C12 Refueling Outage Tubes Plugged
STEAM GENERATOR E-088

Row	Column	Reason for Plugging Tube (per Table 4)
3	1	ID Axial @ U-bend
31	5	Prevent @ Miscellaneous
1	9	Prevent @ Miscellaneous
68	18	ID Circ @ TSH
71	31	OD Axial @ Freespan
81	43	Wear @ Support
113	49	OD Vol @ Miscellaneous
34	54	OD Axial @ Freespan
118	54	Wear @ Support
103	55	OD Circ @ TSH
1	63	Prevent @ Miscellaneous
141	65	Wear @ Support
36	66	ID Axial below TSH
142	66	Wear @ Support
24	68	Wear @ Support
36	70	ID Axial below TSH
98	70	Wear @ Support
34	72	Wear @ Support
44	72	Wear @ Support
33	73	Wear @ Support
40	74	Wear @ Support
96	74	OD Axial @ Freespan
145	75	Wear @ Support
144	78	Wear @ Support
46	80	Wear @ Support
50	80	Wear @ Support
62	80	ID Circ @ TSH
102	80	Prevent @ Miscellaneous
49	81	Wear @ Support
59	83	Wear @ Support
59	85	Wear @ Support

TABLE 6 (CONT.) – SONGS U3C12 Refueling Outage Tubes Plugged
STEAM GENERATOR E-088

Row	Column	Reason for Plugging Tube (per Table 4)
50	88	Wear @ Support
84	88	Wear @ Support
61	89	Wear @ Support
65	89	Wear @ Support
54	90	Wear @ Support
62	90	Wear @ Support
146	90	Wear @ Support
51	91	Wear @ Support
59	91	Wear @ Support
61	91	Wear @ Support
54	92	Wear @ Support
56	92	Wear @ Support
55	93	Wear @ Support
61	93	Wear @ Support
54	94	Wear @ Support
147	95	Wear @ Support
53	97	ID Axial below TSH
146	98	Wear @ Support
48	100	Wear @ Support
41	101	Wear @ Support
33	103	Wear @ Support
37	103	Wear @ Support
39	103	Wear @ Support
103	103	OD Axial @ Freespan
144	104	Wear @ Support
22	108	Wear @ Support
37	109	ID Axial below TSH
49	109	ID Axial below TSH
32	110	ID Axial below TSH
126	110	Wear @ Support
37	111	ID Axial below TSH
49	113	ID Circ @ TSH

TABLE 6 (CONT.) – SONGS U3C12 Refueling Outage Tubes Plugged
STEAM GENERATOR E-088

Row	Column	Reason for Plugging Tube (per Table 4)
8	122	ID Circ below TSH
68	128	OD Vol @ Miscellaneous
11	129	ID Circ @ TSH
10	132	ID Circ @ TSH
10	136	ID Circ @ TSH
94	138	ID Circ below TSH
73	143	Wear @ Support
36	146	Wear @ Support
47	151	Wear @ Support

TABLE 7 – SONGS U3C12 Refueling Outage Tubes Plugged
STEAM GENERATOR E-089

Row	Column	Reason for Plugging Tube (per Table 4)
50	22	Wear @ Support
41	31	Wear @ Support
31	41	ID Circ @ TSH
119	57	OD Axial @ Freespan
126	64	Wear @ Support
142	66	Wear @ Support
42	68	Wear @ Support
31	71	Wear @ Support
37	71	Wear @ Support
32	72	Wear @ Support
34	72	Wear @ Support
38	72	Wear @ Support
144	72	Wear @ Support
43	73	Wear @ Support
45	73	Wear @ Support
144	74	Wear @ Support
47	75	Wear @ Support
49	75	Wear @ Support
101	75	ID Circ @ TSH
53	77	Wear @ Support
46	78	Wear @ Support
126	78	Wear @ Support
146	78	Wear @ Support
79	81	Wear @ Support
52	82	Wear @ Support
146	82	Wear @ Support
53	83	Wear @ Support
59	85	Wear @ Support
54	88	Wear @ Support
54	90	Wear @ Support
56	90	Wear @ Support
97	91	Wear @ Support
54	92	Wear @ Support
79	93	Wear @ Support

TABLE 7 (CONT.) – SONGS U3C12 Refueling Outage Tubes Plugged
STEAM GENERATOR E-089

Row	Column	Reason for Plugging Tube (per Table 4)
58	94	Wear @ Support
59	95	Wear @ Support
54	96	Wear @ Support
144	96	Wear @ Support
146	96	Wear @ Support
67	97	OD Axial @ Sludge Pile TSH
49	99	Wear @ Support
46	100	Wear @ Support
54	100	Wear @ Support
43	101	Wear @ Support
45	101	Wear @ Support
38	102	Wear @ Support
37	103	Wear @ Support
43	103	Wear @ Support
34	104	Wear @ Support
130	110	Wear @ Support
31	111	ID Axial below TSH
126	112	Wear @ Support
27	113	ID Axial below TSH
82	116	Wear @ Support
43	117	Wear @ Support
41	119	Wear @ Support
121	119	Wear @ Support
31	123	ID Circ below TSH
52	124	Wear @ Support
70	124	Wear @ Support
47	125	Wear @ Support
30	126	OD Circ @ TSH
34	128	OD Circ @ TSH
45	135	Wear @ Support
114	140	Wear @ Support
47	147	Wear @ Support
40	156	Wear @ Support

Appendix 1

Steam Generator Reference Information

Steam Generator
CE Model 3410 Tube Support Drawing

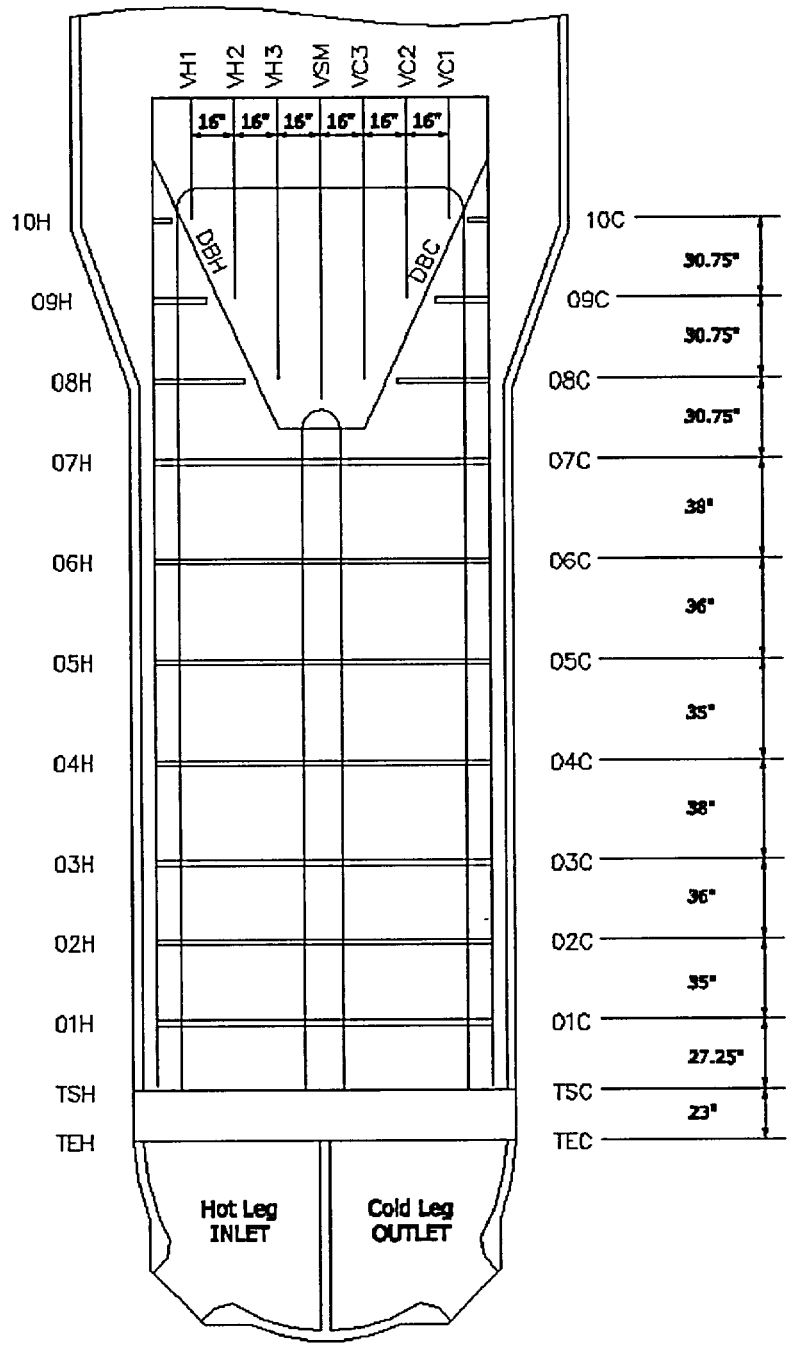

STEAM GENERATOR TUBE SUPPORT INTERSECTIONS ABOVE THE 7TH (FULL) EGGCRATE SUPPORT

SUPPORT INTERSECTIONS															
ROW	STRUCTURES														
122-147	08H	09H	10H	DBH	VH1	VH2	VH3	VSM	VC3	VC2	VC1	DBC	10C	09C	08C
120-121*	08H	09H	10H	DBH	VH1	VH2	VH3	VSM	VC3	VC2	VC1	DBC	10C	09C	08C
115-119	08H	09H		DBH	VH1	VH2	VH3	VSM	VC3	VC2	VC1	DBC		09C	08C
86-114	08H	09H		DBH		VH2	VH3	VSM	VC3	VC2		DBC		09C	08C
84-85*	08H	09H		DBH		VH2	VH3	VSM	VC3	VC2		DBC		09C	08C
83	08H			DBH		VH2	VH3	VSM	VC3	VC2		DBC			08C
51-82	08H			DBH			VH3	VSM	VC3			DBC			08C
49-50*	08H			DBH				VSM				DBC			08C
19-48				DBH				VSM				DBC			
1-18				DBH								DBC			

* Indicates those rows adjacent to scallop bars

SOUTHERN CALIFORNIA EDISON, SAN ONOFRE

CE MODEL 3410 STEAM GENERATOR

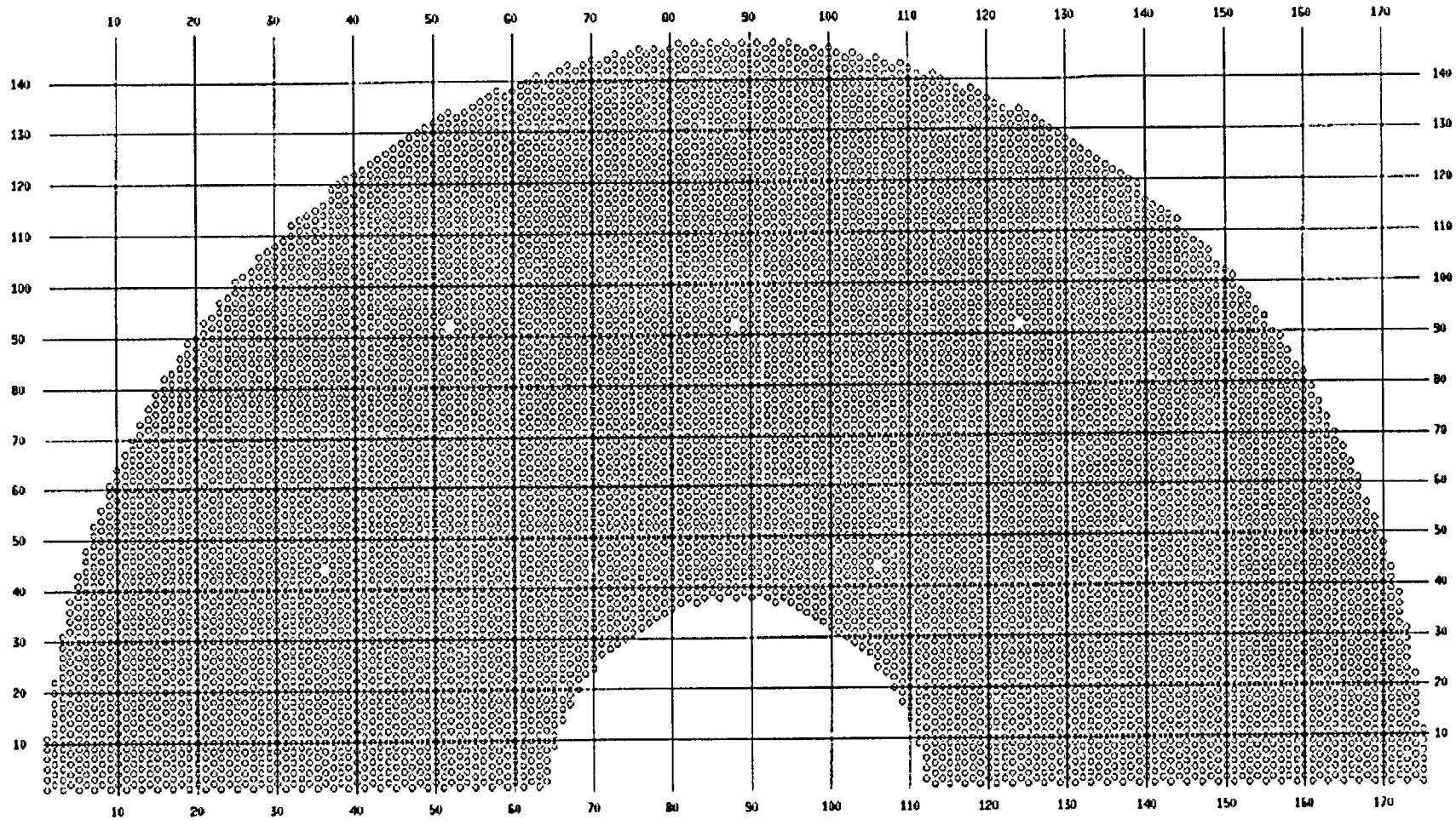

Appendix 2

Legend for Appendices 3 and 4

List of Abbreviations and Format Used to Describe Indications from Rotating Probe Testing

"I-Code" Abbreviations	Explanation of the Abbreviations
SCI	Single Circumferential Indication
MCI	Multiple Circumferential Indications
SAI	Single Axial Indication
MAI	Multiple Axial Indications
MMI	Mixed Mode Indications
SVI	Single Volumetric Indication (i.e. no special axial or circumferential aspect)
MVI	Multiple Volumetric Indications (i e. no special axial or circumferential aspect)

Format

In Appendices 3 and 4, a single line of data is associated with each individual rotating probe indication. Below is a descriptive example of the format.

ROW	LINE	VOLTS	DEG	CHN	IND	%TW	LOCATION	EXT	EXT	UTIL 1	UTIL 2
4	12	+P VOLTS	+P DEG	CH#	CODE	%	LOCATION	EXT	EXT	PAN VOLTS	INCHES

1. All "I-Code" indications require a single line entry. The example above displays the form of a Resolution Report line The VOLTS field contains the Plus-Point P-to-P voltage of the largest, most representative response. The DEG field contains the corresponding phase angle The CHN field contains the reporting channel (i e. the appropriate 300kHz Plus-Point channel) The IND field contains the appropriate 3-letter code (see list above). The %TW field indicates the percent wall loss for wear indications The LOCATION field contains the abbreviation for the referenced landmark and the (FROM-TO) distance for the indication The EXT fields contain the landmarks of the beginning and end of the test extent. The UTIL 1 field contains the 300kHz pancake P-to-P voltage of the largest, most representative response. The UTIL 2 field was used to document the actual inspection distance below the hot leg top-of-tubesheet for applicable inspections. Exceptions to this general guidance are provided in paragraphs 2 through 4 below.

2. For axial indications of extended length, the location should be ranged (FROM-TO) in the LOCATION field If the range of such an indication includes any part of a support structure, it should be references from that landmark

3. For "I-Code" indications which have both axial and circumferential extent (i e. SVI, MVI, and MMI), the location should be ranged in the LOCATION field (as above) and the UTIL 2 field should contain the circumferential length.

4. Some data lines contain a note abbreviation in the Util 1 column. These are the definitions of these abbreviations
   NEW. Result of re-analysis of the data
   LAR: Lead Analyst Reviewed
   LOCOK: Location Verification

Appendix 3

Inspection Summary

Steam Generator E-088

MAI, MCI, MMI, MVI, SAI, SCI, SVI, 0-100%TWD

QUERY: rpc_icodes_and_0-100%twd

ROW	LINE	VOLTS	DEG	CHN	IND	%TW	LOCATION		EXT	EXT	UTIL	1 UTIL	2 CAL #	LEG	PROBE
1	113	0.40	132	P 2	TWD	18	04H	+0.75	DBH	TEH	LAR		4	HOT	600UL
3	1	1.12	21	5	SAI		DBH	+8.69	07H	07C	LAR		89	COLD	5002P
4	146	0.26	79	P 2	TWD	10	02H	-0.90	TEH	TEC			30	COLD	600UL
5	147	0.33	54	P 2	TWD	13	07H	+0.93	TEH	TEC			40	COLD	600UL
		0.33	54	P 2	TWD	13	07H	+0.93	TEH	TEC			40	COLD	600UL
7	1	0.30	52	P 2	TWD	13	DBC	+0.62	TEH	TEC			56	COLD	600UL
		0.29	51	P 2	TWD	13	DBC	+0.62	TEH	TEC			56	COLD	600UL
7	175	0.33	143	P 2	TWD	19	01C	-0.84	TEH	TEC			41	COLD	600UL
8	122	0.31	19	P 1	SCI		TSH	-8.95	TSH	TSH	.51	10.48	56	HOT	580PP
		0.23	20	P 1	SCI		TSH	-0.82	TSH	TSH	.52		56	HOT	580PP
		0.51	22	P 1	MCI		TSH	-5.57	TSH	TSH	.57		56	HOT	580PP
10	132	0.38	33	P 1	SCI		TSH	-0.12	TSH	TSH	0.0	9.10	18	HOT	580PP
		0.30	16	P 1	SCI		TSH	-2.99	TSH	TSH	0.0		18	HOT	580PP
		0.32	20	P 1	SCI		TSH	-6.98	TSH	TSH	0.0		18	HOT	580PP
		0.44	23	P 1	SCI		TSH	-7.32	TSH	TSH	.74		18	HOT	580PP
10	136	0.53	25	P 1	MCI		TSH	-0.01	TSH	TSH	1.76	9.06	23	HOT	580PP
11	129	0.50	23	P 1	SCI		TSH	-0.10	TSH	TSH	0.22	8.74	46	HOT	580PP
14	128	0.36	67	P 2	TWD	15	02H	-1.18	TEH	TEC			60	COLD	600UL
14	174	1.11	135	P 2	TWD	29	01C	-0.51	TEH	TEC			38	COLD	600UL
15	121	0.46	63	P 2	TWD	17	07H	-1.03	TEH	TEC			46	COLD	600UL
		0.46	63	P 2	TWD	17	07H	-1.03	TEH	TEC			46	COLD	600UL
17	67	0.31	49	P 2	TWD	13	DBH	+1.97	TEH	TEC	NEW		25	COLD	600UL
17	109	0.24	63	P 2	TWD	11	DBC	-1.81	TEH	TEC	NEW		49	COLD	600UL
17	173	0.60	132	P 2	TWD	17	01C	-0.84	TEH	TEC			39	COLD	600UL
22	18	0.25	82	P 2	TWD	12	VSM	-1.21	TEC	TEH			85	HOT	600UL
		0.25	88	P 2	TWD	12	VSM	-1.21	TEC	TEH			85	HOT	600UL
22	108	1.44	120	P 2	TWD	34	DBC	-1.57	TEH	TEC			48	COLD	600UL
		1.44	120	P 2	TWD	34	DBC	-1.57	TEH	TEC			48	COLD	600UL
23	123	0.41	119	P 2	TWD	15	07H	+0.30	TEH	TEC			61	COLD	600UL
		0.41	119	P 2	TWD	15	07H	+0.30	TEH	TEC			61	COLD	600UL
23	127	0.32	146	P 2	TWD	14	06H	+0.40	TEH	TEC			60	COLD	600UL
23	145	0.38	102	P 2	TWD	15	VSM	-0.91	TEH	TEC			33	COLD	600UL
		0.38	102	P 2	TWD	15	VSM	-0.91	TEH	TEC			33	COLD	600UL
23	153	0.40	72	P 2	TWD	18	VSM	-0.83	TEH	TEC			32	COLD	600UL
		0.41	64	P 2	TWD	18	VSM	-0.83	TEH	TEC			32	COLD	600UL
24	68	0.34	72	P 2	TWD	13	DBH	-1.55	TEH	TEC	NEW		24	COLD	600UL
		0.55	108	P 6	TWD	26	DBH	-1.55	DBH	DBH	LAR		131	COLD	580FH
24	108	0.58	124	P 2	TWD	22	VSM	-0.89	TEH	TEC			49	COLD	600UL
		0.14	130	P 2	TWD	7	DBC	+1.57	TEH	TEC			49	COLD	600UL
		0.58	124	P 2	TWD	22	VSM	-0.89	TEH	TEC			49	COLD	600UL
		0.16	102	P 2	TWD	7	DBC	+1.57	TEH	TEC			49	COLD	600UL
24	118	0.49	87	P 2	TWD	18	01H	+0.88	TEH	TEC			46	COLD	600UL
24	126	0.47	125	P 2	TWD	15	07H	+0.78	TEH	TEC			44	COLD	600UL
		0.47	130	P 2	TWD	15	07H	+0.78	TEH	TEC			44	COLD	600UL
25	39	0.24	125	P 2	TWD	12	VSM	+0.72	TEC	TEH			94	HOT	600UL
		0.24	124	P 2	TWD	12	VSM	+0.72	TEC	TEH			94	HOT	600UL
28	10	0.22	55	P 2	TWD	11	DBC	+2.25	TEC	TEH			81	HOT	600UL
		0.22	55	P 2	TWD	11	DBC	+2.25	TEC	TEH			81	HOT	600UL

MAI, MCI, MMI, MVI, SAI, SCI, SVI, 0-100%TWD

QUERY: rpc_icodes_and_0-100%twd.qry

ROW	LINE	VOLTS	DEG	CHN	IND	%TW	LOCATION		EXT	EXT	UTIL	1 UTIL	2 CAL #	LEG	PROBE
28	54	0.32	115	P 2	TWD	12	06H	+0.10	TEH	TEC			26	COLD	600UL
28	122	0.42	92	P 2	TWD	16	01H	+0.90	TEH	TEC			62	COLD	600UL
28	172	0.61	101	P 2	TWD	18	01C	+0.10	TEH	TEC			39	COLD	600UL
29	13	0.35	135	P 2	TWD	16	DBH	+0.75	TEC	TEH	NEW		80	HOT	600UL
29	107	0.43	148	P 2	TWD	16	DBH	-1.60	TEH	TEC			48	COLD	600UL
		0.43	148	P 2	TWD	16	DBH	-1.60	TEH	TEC			48	COLD	600UL
30	126	0.39	41	P 2	TWD	17	02H	-1.24	TEH	TEC			60	COLD	600UL
30	166	0.26	19	P 2	TWD	10	DBH	+1.83	TEH	TEC			36	COLD	600UL
		0.26	19	P 2	TWD	10	DBH	+1.83	TEH	TEC			36	COLD	600UL
30	172	0.44	43	P 2	TWD	16	06H	+0.95	TEH	TEC			38	COLD	600UL
31	39	0.27	125	P 2	TWD	12	07H	+0.60	TEC	TEH			93	HOT	600UL
		0.27	125	P 2	TWD	10	07H	+0.60	TEC	TEH			93	HOT	600UL
31	161	0.30	162	P 2	TWD	11	DBH	+1.75	TEH	TEC			36	COLD	600UL
		0.29	163	P 2	TWD	11	DBH	+1.75	TEH	TEC			36	COLD	600UL
31	167	0.48	148	P 2	TWD	14	DBH	+0.90	TEH	TEC	NEW		39	COLD	600UL
32	42	0.27	74	P 2	TWD	11	07H	+0.72	TEC	TEH			95	HOT	600UL
		0.31	102	P 2	TWD	12	07H	+0.72	TEC	TEH			95	HOT	600UL
32	106	0.35	142	P 2	TWD	13	04C	+0.90	TEH	TEC			48	COLD	600UL
32	110	0.38	18	2	SAI		TSH	-0.61	TSH	TSH	.71		56	HOT	580PP
		0.69	18	2	MAI		TSH	-1.53	TSH	TSH	.57	8.89	56	HOT	580PP
32	124	0.56	136	P 2	TWD	18	VSM	-0.88	TEH	TEC			44	COLD	600UL
		0.56	137	P 2	TWD	18	VSM	-0 88	TEH	TEC			44	COLD	600UL
33	43	0.20	107	P 2	TWD	8	07H	+0.72	TEC	TEH			95	HOT	600UL
		0.20	107	P 2	TWD	8	07H	+0.72	TEC	TEH			95	HOT	600UL
33	73	1.12	105	P 2	TWD	31	DBC	-2.06	TEH	TEC			22	COLD	600UL
		1.40	99	P 6	TWD	50	DBC	-2.08	DBC	DBC	LAR		130	COLD	580FH
		1.17	107	P 2	TWD	32	DBC	-2.06	TEH	TEC			22	COLD	600UL
33	103	1.09	107	P 2	TWD	30	DBH	+1.84	TEH	TEC			48	COLD	600UL
		0.45	129	P 2	TWD	16	DBC	+1.47	TEH	TEC			48	COLD	600UL
		0.47	138	P 2	TWD	17	DBC	+1.47	TEH	TEC			48	COLD	600UL
		1.09	107	P 2	TWD	30	DBH	+1.84	TEH	TEC			48	COLD	600UL
33	125	0.39	64	P 2	TWD	17	02H	-1.14	TEH	TEC			60	COLD	600UL
34	54	0.11	101	2	SAI		02H	-2.31	02H	02H	0.35		129	HOT	580PP
34	72	0.79	87	P 2	TWD	25	DBH	-1.96	TEH	TEC			22	COLD	600UL
		0.78	86	P 2	TWD	26	DBH	-1.96	TEH	TEC			22	COLD	600UL
34	108	0.27	121	P 2	TWD	11	07H	-0.12	TEH	TEC			48	COLD	600UL
		0.32	77	P 2	TWD	12	07H	-0.12	TEH	TEC			48	COLD	600UL
34	112	0.32	47	P 2	TWD	14	VSM	+0.81	TEH	TEC			49	COLD	600UL
		0.31	47	P 2	TWD	14	VSM	+0.81	TEH	TEC			49	COLD	600UL
34	128	0.28	130	P 2	TWD	12	VSM	+0.79	TEH	TEC	NEW		60	COLD	600UL
34	172	0.72	89	P 2	TWD	23	VSM	+0.76	TEH	TEC			38	COLD	600UL
		0.72	90	P 2	TWD	22	VSM	+0.76	TEH	TEC			38	COLD	600UL
35	7	0.28	61	P 2	TWD	13	VSM	-1.11	TEC	TEH			81	HOT	600UL
		0.28	51	P 2	TWD	13	VSM	-1.11	TEC	TEH			81	HOT	600UL
35	53	0.33	87	P 2	TWD	15	VSM	-0.70	TEH	TEC	NEW		27	COLD	600UL
35	107	0.28	152	P 2	TWD	13	VSM	+0.00	TEH	TEC			49	COLD	600UL
		0.35	143	P 2	TWD	15	VSM	-0.66	TEH	TEC			49	COLD	600UL

MAI, MCI, MMI, MVI, SAI, SCI, SVI, 0-100%TWD

QUERY: rpc_icodes_and_0-100%twd.qry

ROW	LINE	VOLTS	DEG	CHN	IND	%TW	LOCATION			EXT	EXT	UTIL 1	UTIL 2	CAL #	LEG	PROBE
		0.35	143	P 2	TWD	15	VSM	-0.66		TEH	TEC			49	COLD	600UL
		0.28	152	P 2	TWD	13	VSM	+0.00		TEH	TEC			49	COLD	600UL
35	121	0.35	133	P 2	TWD	13	05H	+0.79		TEH	TEC			46	COLD	600UL
35	125	0.31	158	P 2	TWD	11	VSM	-0.80		TEH	TEC			44	COLD	600UL
		0.51	128	P 2	TWD	17	VSM	+0.87		TEH	TEC			44	COLD	600UL
		0.34	161	P 2	TWD	12	VSM	-0.80		TEH	TEC			44	COLD	600UL
		0.51	130	P 2	TWD	17	VSM	+0.87		TEH	TEC			44	COLD	600UL
36	30	0.39	156	P 2	TWD	17	VSM	-0.70		TEC	TEH			88	HOT	600UL
		0.38	155	P 2	TWD	17	VSM	-0.70		TEC	TEH			88	HOT	600UL
36	46	0.35	121	P 2	TWD	14	VSM	+0.63		TEC	TEH			95	HOT	600UL
		0.25	34	P 2	TWD	11	VSM	-0.58		TEC	TEH			95	HOT	600UL
		0.30	127	P 2	TWD	12	07H	-0.38		TEC	TEH			95	HOT	600UL
		0.36	122	P 2	TWD	14	VSM	+0.63		TEC	TEH			95	HOT	600UL
		0.26	36	P 2	TWD	10	VSM	-0.58		TEC	TEH			95	HOT	600UL
		0.30	127	P 2	TWD	12	07H	-0.38		TEC	TEH			95	HOT	600UL
36	50	0.25	157	P 2	TWD	9	07H	+0.96		TEH	TEC			26	COLD	600UL
		0.43	42	P 2	TWD	15	07H	+0.43		TEH	TEC			26	COLD	600UL
		0.43	42	P 2	TWD	15	07H	+0.43		TEH	TEC			26	COLD	600UL
		0.24	159	P 2	TWD	9	07H	+0.96		TEH	TEC			26	COLD	600UL
36	52	0.30	44	P 2	TWD	13	06H	+0.43		TEH	TEC			27	COLD	600UL
36	66	0.62	16	2	MAI		TSH	-5.08	TO-1.34	TSH	TSH	0.74	8.24	102	HOT	580PP
		0.79	113	P 2	TWD	24	VSM	-0.94		TEH	TEC			24	COLD	600UL
		0.79	116	P 2	TWD	25	VSM	-0.94		TEH	TEC			24	COLD	600UL
36	70	0.37	16	2	SAI		TSH	-2.91		TSH	TSH	0.54	9.31	101	HOT	580PP
		0.41	21	2	SAI		TSH	-2.55		TSH	TSH	0.46		101	HOT	580PP
36	108	0.46	123	P 2	TWD	19	VSM	-0.14		TEH	TEC			49	COLD	600UL
		0.52	107	P 2	TWD	21	VSM	-0.72		TEH	TEC			49	COLD	600UL
		0.52	107	P 2	TWD	20	VSM	-0.72		TEH	TEC			49	COLD	600UL
		0.42	113	P 2	TWD	17	VSM	-0.14		TEH	TEC			49	COLD	600UL
36	112	0.76	143	P 2	TWD	24	VSM	+0.66		TEH	TEC			48	COLD	600UL
		0.28	135	P 2	TWD	11	VSM	-0.70		TEH	TEC			48	COLD	600UL
		0.28	126	P 2	TWD	11	VSM	-0.70		TEH	TEC			48	COLD	600UL
		0.76	143	P 2	TWD	24	VSM	+0.66		TEH	TEC			48	COLD	600UL
36	146	1.28	123	P 2	TWD	35	VSM	+0.81		TEH	TEC			32	COLD	600UL
		1.26	130	P 2	TWD	34	VSM	+0.81		TEH	TEC			32	COLD	600UL
37	43	0.55	67	P 2	TWD	20	VSM	+0.67		TEC	TEH			95	HOT	600UL
		0.55	72	P 2	TWD	19	VSM	+0.67		TEC	TEH			95	HOT	600UL
37	51	0.44	58	P 2	TWD	19	07H	+0.43		TEH	TEC			27	COLD	600UL
		0.44	58	P 2	TWD	19	07H	+0.43		TEH	TEC			27	COLD	600UL
37	57	0.37	143	P 2	TWD	16	VSM	-0.02		TEH	TEC			27	COLD	600UL
		0.37	143	P 2	TWD	16	VSM	-0.02		TEH	TEC			27	COLD	600UL
37	103	0.54	140	P 2	TWD	21	VSM	-0.84		TEH	TEC			49	COLD	600UL
		0.54	140	P 2	TWD	21	VSM	-0.84		TEH	TEC			49	COLD	600UL
		1.41	27	P 2	TWD	36	DBH	+1.72		TEH	TEC	NEW		49	COLD	600UL
37	105	0.31	71	P 2	TWD	12	DBH	+1.63		TEH	TEC	NEW		48	COLD	600UL
37	109	0.39	17	2	SAI		TSH	-2.21		TSH	TSH	.21		56	HOT	580PP
		0.57	20	2	SAI		TSH	-2.81		TSH	TSH	.79	8.74	56	HOT	580PP
37	111	0.85	24	2	MAI		TSH	-5.04	TO-1.19	TSH	TSH	1.32	8.87	57	HOT	580PP
37	127	0.52	102	P 2	TWD	17	VSM	-0.93		TEH	TEC	NEW		44	COLD	600UL
37	143	0.56	96	P 2	TWD	19	01H	+0.82		TEH	TEC			33	COLD	600UL
37	147	0.32	116	P 2	TWD	16	VSM	+0.81		TEH	TEC			32	COLD	600UL
		0.32	116	P 2	TWD	16	VSM	+0.81		TEH	TEC			32	COLD	600UL
38	104	0.25	52	P 2	TWD	12	DBH	-1.73		TEH	TEC	NEW		49	COLD	600UL

MAI, MCI, MMI, MVI, SAI, SCI, SVI, 0-100%TWD

QUERY: rpc_icodes_and_0-100%twd.qry

ROW	LINE	VOLTS	DEG	CHN	IND	%TW	LOCATION		EXT	EXT	UTIL	1 UTIL	2 CAL #	LEG	PROBE
38	106	0.17	54	P 2	TWD 8	VSM		-0.07	TEH	TEC			49	COLD	600UL
		0.17	54	P 2	TWD 8	VSM		-0.07	TEH	TEC			49	COLD	600UL
		0.34	100	P 2	TWD 15	VSM		+0.94	TEH	TEC			49	COLD	600UL
		0.36	98	P 2	TWD 15	VSM		+0.94	TEH	TEC			49	COLD	600UL
38	170	0.27	89	P 2	TWD 11	01H		-0.09	TEH	TEC			38	COLD	600UL
39	53	0.34	143	P 2	TWD 15	VSM		+0 67	TEH	TEC	NEW		27	COLD	600UL
39	65	0.35	128	P 2	TWD 14	VSM		+0.89	TEH	TEC			25	COLD	600UL
		0.35	133	P 2	TWD 14	VSM		+0.89	TEH	TEC			25	COLD	600UL
39	67	0.46	102	P 2	TWD 17	VSM		-0.64	TEH	TEC			25	COLD	600UL
		0.43	107	P 2	TWD 16	VSM		+0.80	TEH	TEC			25	COLD	600UL
		0.46	102	P 2	TWD 17	VSM		-0.64	TEH	TEC			25	COLD	600UL
		0.44	108	P 2	TWD 17	VSM		+0.80	TEH	TEC			25	COLD	600UL
39	103	0.80	88	P 2	TWD 25	DBH		+1.87	TEH	TEC	NEW		48	COLD	600UL
39	131	0.38	106	P 2	TWD 15	VSM		+0.27	TEH	TEC			34	COLD	600UL
39	153	0.40	146	P 2	TWD 13	VSM		+1.08	TEH	TEC			37	COLD	600UL
		0.38	144	P 2	TWD 14	VSM		+1.08	TEH	TEC			37	COLD	600UL
40	38	0.42	112	P 2	TWD 17	VSM		+0.73	TEC	TEH			93	HOT	600UL
		0.29	138	P 2	TWD 13	VSM		-0.82	TEC	TEH			93	HOT	600UL
		0.42	112	P 2	TWD 17	VSM		+0.73	TEC	TEH			93	HOT	600UL
		0.24	124	P 2	TWD 11	VSM		-0.82	TEC	TEH			93	HOT	600UL
40	62	0.54	119	P 2	TWD 20	VSM		+0.71	TEH	TEC			25	COLD	600UL
		0.54	119	P 2	TWD 20	VSM		+0.71	TEH	TEC			25	COLD	600UL
40	68	0.97	63	P 2	TWD 28	VSM		+0.75	TEH	TEC			24	COLD	600UL
		0.42	146	P 2	TWD 16	VSM		-0.81	TEH	TEC			24	COLD	600UL
		1.00	69	P 2	TWD 28	VSM		+0.75	TEH	TEC			24	COLD	600UL
		0.42	143	P 2	TWD 16	VSM		-0.81	TEH	TEC			24	COLD	600UL
40	74	0.86	96	P 2	TWD 28	DBC		+1.43	TEH	TEC			23	COLD	600UL
		0.36	121	P 2	TWD 16	VSM		+0.80	TEH	TEC			23	COLD	600UL
		0.36	124	P 2	TWD 16	VSM		+0.80	TEH	TEC			23	COLD	600UL
		0.86	96	P 2	TWD 28	DBC		+1.43	TEH	TEC			23	COLD	600UL
40	104	0.56	156	P 2	TWD 19	VSM		+0.88	TEH	TEC			48	COLD	600UL
		0.56	158	P 2	TWD 19	VSM		+0.88	TEH	TEC			48	COLD	600UL
40	122	0.31	105	P 2	TWD 12	07H		-0.42	TEH	TEC			62	COLD	600UL
		0.31	105	P 2	TWD 12	07H		-0.42	TEH	TEC			62	COLD	600UL
41	73	0.39	115	P 2	TWD 16	DBH		-1.54	TEH	TEC			23	COLD	600UL
		0.39	124	P 2	TWD 16	DBH		-1.54	TEH	TEC			23	COLD	600UL
41	101	0.68	77	P 2	TWD 24	DBH		-2.19	TEC	TEH			90	HOT	600UL
		0.71	77	P 2	TWD 25	DBH		-2.19	TEC	TEH			90	HOT	600UL
41	129	0.59	21	P 2	TWD 22	DBH		+1.66	TEH	TEC			60	COLD	600UL
		0.59	21	P 2	TWD 22	DBH		+1.66	TEH	TEC			60	COLD	600UL
42	74	0.64	97	P 2	TWD 22	DBH		-1.76	TEH	TEC			22	COLD	600UL
		0.63	96	P 2	TWD 22	DBH		-1.76	TEH	TEC			22	COLD	600UL
42	124	0.31	93	P 2	TWD 12	01H		+0.78	TEH	TEC			61	COLD	600UL
42	128	0.36	103	P 2	TWD 16	01H		+0.72	TEH	TEC			60	COLD	600UL
43	5	0.59	109	P 2	TWD 23	04C		-0.13	TEC	TEH			80	HOT	600UL
43	9	0.21	56	P 2	TWD 11	VSM		-0.88	TEC	TEH			81	HOT	600UL
		0.21	56	P 2	TWD 11	VSM		-0.88	TEC	TEH			81	HOT	600UL
43	13	0.34	136	P 2	TWD 15	VSM		-0.83	TEC	TEH			81	HOT	600UL
		0.34	136	P 2	TWD 15	VSM		-0.83	TEC	TEH			81	HOT	600UL
43	21	0.28	126	P 2	TWD 13	VSM		+0.80	TEC	TEH			85	HOT	600UL
		0.28	126	P 2	TWD 13	VSM		+0.80	TEC	TEH			85	HOT	600UL

MAI, MCI, MMI, MVI, SAI, SCI, SVI, 0-100%TWD

QUERY: rpc_icodes_and_0-100%twd.qry

ROW	LINE	VOLTS	DEG	CHN	IND	%TW	LOCATION		EXT	EXT	UTIL 1	UTIL 2	CAL #	LEG	PROBE
43	53	0.24	149	P 2	TWD 11	VSM	+0.02		TEH	TEC			27	COLD	600UL
		0.54	138	P 2	TWD 21	VSM	+0.83		TEH	TEC			27	COLD	600UL
		0.54	138	P 2	TWD 21	VSM	+0.83		TEH	TEC			27	COLD	600UL
		0.24	149	P 2	TWD 12	VSM	+0.02		TEH	TEC			27	COLD	600UL
43	133	0.29	46	P 2	TWD 15	02H	-1.18		TEH	TEC			32	COLD	600UL
43	149	0.61	70	P 2	TWD 24	VSM	+0.85		TEH	TEC			32	COLD	600UL
		0.61	70	P 2	TWD 24	VSM	+0.85		TEH	TEC			32	COLD	600UL
44	72	1.03	101	P 2	TWD 30	VSM	-0 77		TEH	TEC			22	COLD	600UL
		1.03	101	P 2	TWD 30	VSM	-0.77		TEH	TEC			22	COLD	600UL
44	74	0.30	44	P 2	TWD 13	DBH	-1.39		TEH	TEC			23	COLD	600UL
		0.20	128	P 2	TWD 10	DBC	+2.13		TEH	TEC	NEW		23	COLD	600UL
		0.33	65	P 2	TWD 14	DBH	-1.39		TEH	TEC			23	COLD	600UL
44	100	0.39	146	P 2	TWD 16	DBH	+1.62		TEC	TEH			90	HOT	600UL
		0.62	68	P 2	TWD 23	DBH	-1.71		TEC	TEH			90	HOT	600UL
		0.38	147	P 2	TWD 16	DBH	+1.62		TEC	TEH			90	HOT	600UL
		0.62	64	P 2	TWD 23	DBH	-1.71		TEC	TEH			90	HOT	600UL
44	108	0.51	119	P 2	TWD 20	VSM	-0.21		TEH	TEC			49	COLD	600UL
		0.59	121	P 2	TWD 22	VSM	-0.83		TEH	TEC			49	COLD	600UL
		0.59	123	P 2	TWD 22	VSM	-0.83		TEH	TEC			49	COLD	600UL
		0.52	115	P 2	TWD 20	VSM	-0.21		TEH	TEC			49	COLD	600UL
44	110	0.40	148	P 2	TWD 15	VSM	+0.82		TEH	TEC			48	COLD	600UL
		0.42	139	P 2	TWD 15	VSM	+0.82		TEH	TEC			48	COLD	600UL
44	130	0.46	67	P 2	TWD 16	02H	-1.16		TEH	TEC			35	COLD	600UL
44	154	0.39	51	P 2	TWD 14	VSM	+0.70		TEH	TEC			37	COLD	600UL
		0.39	51	P 2	TWD 14	VSM	+0.70		TEH	TEC			37	COLD	600UL
45	65	0.37	147	P 2	TWD 14	02H	-1.18		TEH	TEC			24	COLD	600UL
45	75	0.31	145	P 2	TWD 13	DBC	-2.11		TEH	TEC			22	COLD	600UL
		0.31	145	P 2	TWD 13	DBC	-2.11		TEH	TEC			22	COLD	600UL
45	101	0.38	117	P 6	TWD 22	DBC	-1.75		DBC	DBC	LAR		130	COLD	580FH
		0.37	175	P 2	TWD 16	DBH	+1.49		TEC	TEH	NEW		90	HOT	600UL
		0.40	83	P 2	TWD 17	DBC	-1.75		TEC	TEH	NEW		90	HOT	600UL
46	78	0.22	100	P 2	TWD 10	DBH	-1.87		TEH	TEC	NEW		23	COLD	600UL
46	80	0.39	117	P 2	TWD 17	DBH	-1.84		TEH	TEC	NEW		23	COLD	600UL
		0.60	105	P 6	TWD 28	DBH	-1.72	TO+1.73	DBH	DBH	LAR		131	COLD	580FH
46	100	0.62	27	P 2	TWD 23	DBH	+1.70		TEC	TEH	NEW		90	HOT	600UL
46	118	0.21	109	P 2	TWD 9	07H	+0.28		TEH	TEC			62	COLD	600UL
		0.21	109	P 2	TWD 9	07H	+0.28		TEH	TEC			62	COLD	600UL
47	73	0.48	111	P 2	TWD 18	DBC	-2.03		TEH	TEC			22	COLD	600UL
		0.47	109	P 2	TWD 18	DBC	-2.03		TEH	TEC			22	COLD	600UL
47	77	0.33	126	P 2	TWD 14	DBC	-1.48		TEH	TEC			23	COLD	600UL
		0.36	123	P 2	TWD 16	DBC	-1.48		TEH	TEC			23	COLD	600UL
47	101	0.46	108	P 6	TWD 23	DBH	-2.20		DBH	DBH	LAR		131	COLD	580FH
		0.41	78	P 2	TWD 17	DBC	-1.59		TEC	TEH			90	HOT	600UL
		0.36	99	P 2	TWD 15	DBH	-2.20		TEC	TEH	NEW		90	HOT	600UL
		0.41	78	P 2	TWD 17	DBC	-1.59		TEC	TEH			90	HOT	600UL
47	109	0.35	49	P 2	TWD 13	VSM	-0.14		TEH	TEC			48	COLD	600UL
		0.33	44	P 2	TWD 13	VSM	-0.14		TEH	TEC			48	COLD	600UL
47	113	0.40	91	P 2	TWD 17	VSM	-0.84		TEH	TEC			49	COLD	600UL
		0.52	120	P 2	TWD 20	VSM	-0.04		TEH	TEC			49	COLD	600UL
		0.71	122	P 2	TWD 25	VSM	+0.78		TEH	TEC			49	COLD	600UL
		0.17	48	P 2	TWD 8	DBC	-1.69		TEH	TEC	NEW		49	COLD	600UL
		0.39	73	P 2	TWD 16	VSM	-0.84		TEH	TEC			49	COLD	600UL
		0.68	122	P 2	TWD 24	VSM	+0.78		TEH	TEC			49	COLD	600UL

MAI, MCI, MMI, MVI, SAI, SCI, SVI, 0-100%TWD

QUERY: rpc_icodes_and_0-100%twd.qry

ROW	LINE	VOLTS	DEG	CHN	IND	%TW	LOCATION		EXT	EXT	UTIL 1	UTIL 2	CAL #	LEG	PROBE
		0.52	120	P 2	TWD	20	VSM	-0.04	TEH	TEC			49	COLD	600UL
47	151	1.39	129	P 2	TWD	34	VSM	-0.69	TEH	TEC			33	COLD	600UL
		1.79	84	P 2	TWD	38	VSM	-0.04	TEH	TEC			33	COLD	600UL
		1.29	101	P 2	TWD	32	VSM	+0.81	TEH	TEC			33	COLD	600UL
		1.39	129	P 2	TWD	34	VSM	-0.69	TEH	TEC			33	COLD	600UL
		1.79	84	P 2	TWD	38	VSM	-0.04	TEH	TEC			33	COLD	600UL
		1.29	101	P 2	TWD	32	VSM	+0.81	TEH	TEC			33	COLD	600UL
48	42	0.22	127	P 2	TWD	8	07H	-0.75	TEC	TEH			95	HOT	600UL
		0.22	127	P 2	TWD	9	07H	-0.75	TEC	TEH			95	HOT	600UL
48	68	0.26	72	P 2	TWD	10	VSM	+0.90	TEH	TEC			24	COLD	600UL
		0.26	72	P 2	TWD	10	VSM	+0.90	TEH	TEC			24	COLD	600UL
48	80	0.50	85	P 2	TWD	19	DBH	-1.51	TEH	TEC			22	COLD	600UL
		0.49	76	P 2	TWD	18	DBH	-1.51	TEH	TEC			22	COLD	600UL
		0.20	47	P 2	TWD	8	DBC	-2.25	TEH	TEC	NEW		22	COLD	600UL
48	100	1.35	117	P 2	TWD	35	VSM	+0.77	TEC	TEH			90	HOT	600UL
		1.52	85	P 2	TWD	37	VSM	-0.04	TEC	TEH			90	HOT	600UL
		1.48	124	P 2	TWD	37	VSM	-0.69	TEC	TEH			90	HOT	600UL
		0.51	175	P 2	TWD	20	DBH	+1.47	TEC	TEH			90	HOT	600UL
		1.35	117	P 2	TWD	35	VSM	+0.77	TEC	TEH			90	HOT	600UL
		1.52	85	P 2	TWD	37	VSM	-0.04	TEC	TEH			90	HOT	600UL
		1.48	124	P 2	TWD	37	VSM	-0.69	TEC	TEH			90	HOT	600UL
		0.51	175	P 2	TWD	20	DBH	+1.47	TEC	TEH			90	HOT	600UL
48	104	0 53	121	P 2	TWD	15	VSM	+0.86	TEH	TEC			53	COLD	600UL
		0.54	118	P 2	TWD	16	VSM	+0.86	TEH	TEC			53	COLD	600UL
48	106	0.58	90	P 2	TWD	16	VSM	+0.00	TEH	TEC			53	COLD	600UL
		0.57	121	P 2	TWD	16	VSM	+0.84	TEH	TEC			53	COLD	600UL
		0.41	119	P 2	TWD	12	VSM	-0.78	TEH	TEC			53	COLD	600UL
		0.41	119	P 2	TWD	12	VSM	-0.78	TEH	TEC			53	COLD	600UL
		0.43	97	P 2	TWD	13	VSM	+0.00	TEH	TEC			53	COLD	600UL
		0.58	119	P 2	TWD	16	VSM	+0.84	TEH	TEC			53	COLD	600UL
48	112	1.06	102	P 2	TWD	29	VSM	+0.82	TEH	TEC			48	COLD	600UL
		0.49	107	P 2	TWD	18	VSM	-0.02	TEH	TEC			48	COLD	600UL
		1.06	97	P 2	TWD	29	VSM	+0.82	TEH	TEC			48	COLD	600UL
		0.49	107	P 2	TWD	18	VSM	-0.02	TEH	TEC			48	COLD	600UL
48	126	0.69	141	P 2	TWD	21	VSM	+1.00	TEH	TEC			44	COLD	600UL
		0.69	141	P 2	TWD	21	VSM	+1.00	TEH	TEC			44	COLD	600UL
48	128	0.63	138	P 2	TWD	19	VSM	-0.72	TEH	TEC			44	COLD	600UL
		0.72	107	P 2	TWD	21	VSM	+0.20	TEH	TEC			44	COLD	600UL
		0.63	138	P 2	TWD	19	VSM	-0.72	TEH	TEC			44	COLD	600UL
		0.65	100	P 2	TWD	20	VSM	+0.20	TEH	TEC			44	COLD	600UL
48	152	0.68	105	P 2	TWD	25	VSM	-0.60	TEH	TEC			32	COLD	600UL
		0.70	104	P 2	TWD	26	VSM	-0.60	TEH	TEC			32	COLD	600UL
48	154	0.42	117	P 2	TWD	15	VSM	+0.78	TEH	TEC			37	COLD	600UL
		0.42	117	P 2	TWD	15	VSM	+0.78	TEH	TEC			37	COLD	600UL
49	7	0.26	133	P 2	TWD	12	06H	-1.11	TEC	TEH			80	HOT	600UL
49	41	0.65	119	P 2	TWD	23	08H	+1.45	TEC	TEH	LOCOK		93	HOT	600UL
		0.65	119	P 2	TWD	23	08H	+1.45	TEC	TEH	LOCOK		93	HOT	600UL
49	43	0.32	84	P 2	TWD	13	08H	+1.45	TEC	TEH	LOCOK		95	HOT	600UL
		0.47	116	P 2	TWD	17	08H	-1.39	TEC	TEH	LOCOK		95	HOT	600UL
		0.32	84	P 2	TWD	12	08H	+1.45	TEC	TEH	LOCOK		95	HOT	600UL
		0.47	115	P 2	TWD	17	08H	-1.39	TEC	TEH	LOCOK		95	HOT	600UL
49	49	0.27	133	P 2	TWD	10	08H	-1.43	TEH	TEC			29	COLD	600UL
		0.43	122	P 2	TWD	16	08H	+1.67	TEH	TEC			29	COLD	600UL
		0.38	97	P 2	TWD	14	08C	-1.67	TEH	TEC			29	COLD	600UL
		0.43	123	P 2	TWD	16	08H	+1.67	TEH	TEC	LOCOK		29	COLD	600UL
		0.27	135	P 2	TWD	10	08H	-1.43	TEH	TEC	LOCOK		29	COLD	600UL
		0.33	103	P 2	TWD	12	08C	-1.67	TEH	TEC	LOCOK		29	COLD	600UL
49	77	0.36	86	P 2	TWD	14	06H	-0.89	TEH	TEC			22	COLD	600UL

MAI, MCI, MMI, MVI, SAI, SCI, SVI, 0-100%TWD

QUERY: rpc_icodes_and_0-100%twd.qry

ROW	LINE	VOLTS	DEG	CHN	IND	%TW	LOCATION		EXT	EXT	UTIL 1	UTIL 2	CAL #	LEG	PROBE
49	81	0.92	91	P 2	TWD	28	DBC	+1.98	TEH	TEC			22	COLD	600UL
		0.92	91	P 2	TWD	28	DBC	+1.98	TEH	TEC			22	COLD	600UL
49	101	0.36	127	P 2	TWD	15	DBH	-2.03	TEC	TEH			90	HOT	600UL
		0.36	128	P 2	TWD	15	DBH	-2.03	TEC	TEH			90	HOT	600UL
49	109	0.56	18	2	SAI		TSH	-0.33	TSH	TSH	.71	9.45	56	HOT	580PP
49	113	0.43	15	2	SAI		TSH	-1.50	TSH	TSH	.44		56	HOT	580PP
		0.49	15	2	SAI		TSH	-2.30	TSH	TSH	.66		56	HOT	580PP
		0.41	15	2	SAI		TSH	-3.34	TSH	TSH	.35	8.93	56	HOT	580PP
		0.36	15	P 1	SCI		TSH	-0.07	TSH	TSH	.00		56	HOT	580PP
49	119	0.46	113	P 2	TWD	17	08H	+0.04	TEH	TEC			46	COLD	600UL
		0.51	65	P 2	TWD	18	02H	-1.17	TEH	TEC			46	COLD	600UL
		0.46	113	P 2	TWD	17	08H	+0.04	TEH	TEC			46	COLD	600UL
49	125	0.51	44	P 2	TWD	20	08H	+1.64	TEH	TEC	LOCOK		60	COLD	600UL
		0.44	141	P 2	TWD	18	08H	-1.23	TEH	TEC			60	COLD	600UL
		0.45	141	P 2	TWD	18	08H	-1.23	TEH	TEC			60	COLD	600UL
		0.51	44	P 2	TWD	20	08H	+1.64	TEH	TEC			60	COLD	600UL
49	127	0.63	100	P 2	TWD	19	08H	-1.12	TEH	TEC	NEW		44	COLD	600UL
49	131	0.28	36	P 2	TWD	11	DBH	-0.69	TEH	TEC			35	COLD	600UL
		0.28	36	P 2	TWD	11	DBH	-0.69	TEH	TEC			35	COLD	600UL
49	169	0.47	115	P 2	TWD	17	01C	-0.81	TEH	TEC			38	COLD	600UL
50	80	0.34	69	P 2	TWD	14	DBC	-1.55	TEH	TEC			23	COLD	600UL
		1.31	98	P 2	TWD	35	DBH	-1.83	TEH	TEC			23	COLD	600UL
		0.34	70	P 2	TWD	15	DBC	-1.55	TEH	TEC			23	COLD	600UL
		1.31	98	P 2	TWD	35	DBH	-1.83	TEH	TEC			23	COLD	600UL
50	88	0.33	59	P 2	TWD	14	DBH	-1.68	TEH	TEC			23	COLD	600UL
		0.41	141	P 2	TWD	17	08H	+1.43	TEH	TEC			23	COLD	600UL
		0.78	88	P 2	TWD	27	DBC	-1.45	TEH	TEC			23	COLD	600UL
		0.33	59	P 2	TWD	14	DBH	-1.68	TEH	TEC			23	COLD	600UL
		0.79	82	P 2	TWD	27	DBC	-1.45	TEH	TEC			23	COLD	600UL
		0.41	143	P 2	TWD	17	08H	+1.43	TEH	TEC	LOCOK		23	COLD	600UL
50	100	0.56	75	P 2	TWD	21	DBH	-1.91	TEC	TEH			90	HOT	600UL
		0.56	75	P 2	TWD	21	DBH	-1.91	TEC	TEH			90	HOT	600UL
51	83	0.43	78	P 2	TWD	18	DBC	-1.45	TEH	TEC			23	COLD	600UL
		0.44	78	P 2	TWD	18	DBC	-1.45	TEH	TEC			23	COLD	600UL
51	91	1.09	33	P 2	TWD	32	DBH	+1.15	TEC	TEH			87	HOT	600UL
		0.62	52	P 2	TWD	22	DBC	+1.92	TEC	TEH			87	HOT	600UL
		1.10	33	P 2	TWD	32	DBH	+1.15	TEC	TEH			87	HOT	600UL
		2.11	94	P 2	TWD	42	DBH	-1.21	TEC	TEH			87	HOT	600UL
		0.62	52	P 2	TWD	22	DBC	+1.92	TEC	TEH			87	HOT	600UL
		2.11	94	P 2	TWD	42	DBH	-1.21	TEC	TEH			87	HOT	600UL
51	99	0.26	129	P 4	TWD	18	DBH	+1.95	DBH	DBH	LAR		127	COLD	560FH
		0.37	63	P 2	TWD	16	DBH	-1.80	TEC	TEH			90	HOT	600UL
		0.37	63	P 2	TWD	16	DBH	-1.80	TEC	TEH			90	HOT	600UL
51	127	0.35	83	P 2	TWD	16	01H	+0.90	TEH	TEC			60	COLD	600UL
51	151	0.42	66	P 2	TWD	16	03H	-1 18	TEH	TEC			33	COLD	600UL
51	153	0.76	118	P 2	TWD	23	08H	+0.38	TEH	TEC	NEW		37	COLD	600UL
51	167	0.39	125	P 2	TWD	12	VH3	+0.88	TEH	TEC			39	COLD	600UL
		0.38	119	P 2	TWD	11	VH3	+0.88	TEH	TEC			39	COLD	600UL
52	82	0.43	126	P 2	TWD	17	DBH	-1.55	TEH	TEC	NEW		22	COLD	600UL
52	98	0.51	62	P 2	TWD	20	DBH	+1.84	TEC	TEH			90	HOT	600UL
		0.42	123	P 2	TWD	17	DBH	-1.70	TEC	TEH			90	HOT	600UL
		0.53	53	P 2	TWD	21	DBH	+1.84	TEC	TEH			90	HOT	600UL
		0.42	123	P 2	TWD	17	DBH	-1.70	TEC	TEH			90	HOT	600UL

MAI, MCI, MMI, MVI, SAI, SCI, SVI, 0-100%TWD

QUERY: rpc_icodes_and_0-100%twd.qry

ROW	LINE	VOLTS	DEG	CHN	IND	%TW	LOCATION		EXT	EXT	UTIL 1	UTIL 2	CAL #	LEG	PROBE
52	168	0.41	90	P 2	TWD	15	VH3	-1.08	TEH	TEC			38	COLD	600UL
		0.38	111	P 2	TWD	14	01H	+0.06	TEH	TEC			38	COLD	600UL
		0.46	93	P 2	TWD	16	VH3	-1.08	TEH	TEC			38	COLD	600UL
		0.51	132	P 2	TWD	18	01C	-0.11	TEH	TEC			38	COLD	600UL
53	67	0.51	150	P 2	TWD	18	08H	-1.13	TEH	TEC			24	COLD	600UL
		0.51	150	P 2	TWD	18	08H	-1.13	TEH	TEC			24	COLD	600UL
53	83	0.71	75	P 2	TWD	24	DBC	-1.85	TEH	TEC			22	COLD	600UL
		0.71	75	P 2	TWD	24	DBC	-1.85	TEH	TEC			22	COLD	600UL
53	85	0.49	130	P 2	TWD	19	DBH	-1.49	TEH	TEC			23	COLD	600UL
		0.63	51	P 2	TWD	23	DBH	+1.98	TEH	TEC			23	COLD	600UL
		0.37	95	P 2	TWD	16	DBC	-1.57	TEH	TEC			23	COLD	600UL
		0.49	129	P 2	TWD	20	DBH	-1.49	TEH	TEC			23	COLD	600UL
		0.65	55	P 2	TWD	24	DBH	+1.98	TEH	TEC			23	COLD	600UL
		0.37	95	P 2	TWD	16	DBC	-1.57	TEH	TEC			23	COLD	600UL
53	87	0.26	120	P 2	TWD	12	DBH	-1.29	TEH	TEC	NEW		23	COLD	600UL
53	91	0.36	139	P 2	TWD	13	DBH	-1.83	TEH	TEC			57	COLD	600UL
		0.18	32	P 2	TWD	7	DBH	+1.93	TEH	TEC			57	COLD	600UL
		0.34	152	P 2	TWD	13	DBH	-1.83	TEH	TEC			57	COLD	600UL
		0.18	32	P 2	TWD	7	DBH	+1.93	TEH	TEC			57	COLD	600UL
53	95	0.40	45	P 2	TWD	16	DBC	-1.46	TEC	TEH			87	HOT	600UL
		0.40	44	P 2	TWD	16	DBC	-1.46	TEC	TEH			87	HOT	600UL
53	97	0.35	17	2	SAI		TSH	-2.21	TSH	TSH	0.00	8.36	10	HOT	580PP
53	125	0.28	81	P 2	TWD	12	08H	-1.00	TEH	TEC			60	COLD	600UL
		0.30	107	P 2	TWD	13	08H	-1.00	TEH	TEC			60	COLD	600UL
54	88	0.39	72	P 2	TWD	16	DBH	-1.43	TEH	TEC			23	COLD	600UL
		0.40	71	P 2	TWD	17	DBH	-1.43	TEH	TEC			23	COLD	600UL
54	90	1.02	90	P 2	TWD	31	DBH	-1.28	TEC	TEH			87	HOT	600UL
		1.03	92	P 2	TWD	31	DBH	-1.28	TEC	TEH			87	HOT	600UL
54	92	1.23	116	P 2	TWD	31	DBH	-1.93	TEH	TEC			57	COLD	600UL
		1.23	116	P 2	TWD	31	DBH	-1.93	TEH	TEC			57	COLD	600UL
54	94	1.27	129	P 2	TWD	31	DBH	-1.77	TEH	TEC			57	COLD	600UL
		0.50	146	P 2	TWD	17	DBC	+1.75	TEH	TEC			57	COLD	600UL
		1.27	129	P 2	TWD	31	DBH	-1.77	TEH	TEC			57	COLD	600UL
		0.50	146	P 2	TWD	17	DBC	+1.75	TEH	TEC			57	COLD	600UL
54	98	0.60	101	P 2	TWD	22	DBH	-1.82	TEC	TEH			90	HOT	600UL
		0.60	101	P 2	TWD	22	DBH	-1.82	TEC	TEH			90	HOT	600UL
54	118	0.57	36	P 2	TWD	20	08H	-1.16	TEH	TEC			62	COLD	600UL
		0.63	133	P 2	TWD	21	08H	-1.16	TEH	TEC			62	COLD	600UL
54	156	0.53	93	P 2	TWD	18	VH3	+0.78	TEH	TEC			36	COLD	600UL
		0.53	93	P 2	TWD	18	VH3	+0.78	TEH	TEC			36	COLD	600UL
55	87	0.58	37	P 2	TWD	21	DBH	-1.67	TEH	TEC			22	COLD	600UL
		0.57	37	P 2	TWD	21	DBH	-1.67	TEH	TEC			22	COLD	600UL
55	91	0.51	70	P 2	TWD	19	DBH	-1.33	TEC	TEH			87	HOT	600UL
		0.36	62	P 2	TWD	15	DBH	-1.33	TEC	TEH			87	HOT	600UL
55	93	0.33	48	P 2	TWD	12	DBH	-1.43	TEH	TEC			57	COLD	600UL
		1.55	121	P 2	TWD	34	DBH	-1.99	TEH	TEC			57	COLD	600UL
		0.33	46	P 2	TWD	12	DBH	-1.43	TEH	TEC			57	COLD	600UL
		1.64	104	P 2	TWD	35	DBH	-1.99	TEH	TEC			57	COLD	600UL
55	97	0.54	122	P 2	TWD	20	DBH	-1.90	TEC	TEH			87	HOT	600UL
		0.54	122	P 2	TWD	20	DBH	-1.90	TEC	TEH			87	HOT	600UL
55	99	0.34	122	P 2	TWD	15	DBH	-1.83	TEC	TEH			90	HOT	600UL
		0.37	95	P 2	TWD	15	DBH	-1.83	TEC	TEH			90	HOT	600UL
55	127	0.27	79	P 2	TWD	12	02H	-1.16	TEH	TEC			60	COLD	600UL

MAI, MCI, MMI, MVI, SAI, SCI, SVI, 0-100%TWD

QUERY: rpc_icodes_and_0-100%twd.qry

ROW	LINE	VOLTS	DEG	CHN	IND	%TW	LOCATION		EXT	EXT	UTIL 1	UTIL 2	CAL #	LEG	PROBE
56	30	0.34	74	P 2	TWD	15	03H	-1.25	TEC	TEH			88	HOT	600UL
56	38	0.40	74	P 2	TWD	16	VH3	-0.98	TEC	TEH			93	HOT	600UL
		0.41	73	P 2	TWD	16	VH3	-0.98	TEC	TEH			93	HOT	600UL
56	44	0.40	36	P 2	TWD	15	08H	+0.87	TEC	TEH			95	HOT	600UL
		0.39	35	P 2	TWD	15	08H	+0.87	TEC	TEH			95	HOT	600UL
56	46	0.63	99	P 2	TWD	22	08H	+0.62	TEC	TEH			95	HOT	600UL
		0.63	99	P 2	TWD	21	08H	+0.62	TEC	TEH			95	HOT	600UL
56	68	0.35	132	P 2	TWD	13	08H	-0.94	TEH	TEC			24	COLD	600UL
		0.32	139	P 2	TWD	12	08H	-0.94	TEH	TEC			24	COLD	600UL
56	82	0.38	139	P 2	TWD	15	DBH	-1.83	TEH	TEC			22	COLD	600UL
		0.56	116	P 2	TWD	20	DBH	-1.83	TEH	TEC			22	COLD	600UL
56	92	1.77	104	P 2	TWD	37	DBH	-1.89	TEH	TEC			57	COLD	600UL
		1.77	104	P 2	TWD	37	DBH	-1.89	TEH	TEC			57	COLD	600UL
56	98	0.21	160	P 2	TWD	10	DBH	-2.12	TEC	TEH	NEW		90	HOT	600UL
56	100	0.27	135	P 2	TWD	12	VSM	-0.71	TEC	TEH			90	HOT	600UL
		0.27	135	P 2	TWD	12	VSM	-0.71	TEC	TEH			90	HOT	600UL
56	122	0.25	99	P 2	TWD	10	07H	+0.54	TEH	TEC	NEW		62	COLD	600UL
56	146	0.34	124	P 2	TWD	13	VH3	-0.94	TEH	TEC			30	COLD	600UL
		0.35	122	P 2	TWD	13	VH3	-0.94	TEH	TEC			30	COLD	600UL
56	164	0.31	91	P 2	TWD	12	VH3	-0.70	TEH	TEC			37	COLD	600UL
		0.31	79	P 2	TWD	10	VH3	-0.70	TEH	TEC			37	COLD	600UL
56	166	0.63	117	P 2	TWD	18	01C	-0.94	TEH	TEC			39	COLD	600UL
57	67	0.49	59	P 2	TWD	18	02H	-1.23	TEH	TEC			24	COLD	600UL
57	79	0.33	32	P 2	TWD	14	DBC	-2.00	TEH	TEC			22	COLD	600UL
		0.33	32	P 2	TWD	14	DBC	-2.00	TEH	TEC			22	COLD	600UL
57	83	0.18	42	P 2	TWD	8	DBC	+1.32	TEH	TEC			23	COLD	600UL
		0.22	57	P 2	TWD	10	DBC	-1.75	TEH	TEC			23	COLD	600UL
		0.41	13	P 2	TWD	17	DBC	+1.05	TEH	TEC			23	COLD	600UL
		0.23	62	P 2	TWD	11	DBC	-1.75	TEH	TEC			23	COLD	600UL
		0.23	50	P 2	TWD	10	DBC	+1.05	TEH	TEC			23	COLD	600UL
		0.19	34	P 2	TWD	10	DBC	+1.32	TEH	TEC			23	COLD	600UL
57	85	0.27	43	P 2	TWD	13	DBH	+1.72	TEH	TEC	NEW		23	COLD	600UL
57	91	0.22	159	P 2	TWD	9	DBC	-1.92	TEC	TEH			87	HOT	600UL
		0.57	40	P 2	TWD	21	DBC	+2.21	TEC	TEH			87	HOT	600UL
		0.30	92	P 2	TWD	12	DBC	-1.92	TEC	TEH			87	HOT	600UL
		0.56	37	P 2	TWD	21	DBC	+2.21	TEC	TEH			87	HOT	600UL
57	121	0.41	59	P 2	TWD	15	02H	-1.21	TEH	TEC			46	COLD	600UL
57	143	0.51	73	P 2	TWD	18	05H	-0.23	TEH	TEC			33	COLD	600UL
57	147	0.38	124	P 2	TWD	18	VH3	-0.69	TEH	TEC			32	COLD	600UL
		0.43	114	P 2	TWD	19	VH3	-0.69	TEH	TEC			32	COLD	600UL
57	167	0.34	76	P 2	TWD	13	01H	+0.11	TEH	TEC			38	COLD	600UL
58	44	0.29	133	P 2	TWD	13	08H	-0.48	TEC	TEH			96	HOT	600UL
		0.29	133	P 2	TWD	13	08H	-0.48	TEC	TEH			96	HOT	600UL
58	84	0.52	92	P 2	TWD	20	DBH	+1.53	TEH	TEC			23	COLD	600UL
		0.51	97	P 2	TWD	20	DBH	+1.53	TEH	TEC			23	COLD	600UL
58	88	0.35	67	P 2	TWD	15	DBH	-0.87	TEH	TEC			23	COLD	600UL
		0.35	72	P 2	TWD	15	DBH	-0.87	TEH	TEC			23	COLD	600UL
58	90	0.41	71	P 2	TWD	16	DBH	-1.40	TEC	TEH			87	HOT	600UL
		0.41	71	P 2	TWD	16	DBH	-1.40	TEC	TEH			87	HOT	600UL

MAI, MCI, MMI, MVI, SAI, SCI, SVI, 0-100%TWD

QUERY: rpc_icodes_and_0-100%twd.qry

ROW	LINE	VOLTS	DEG	CHN	IND	%TW	LOCATION			EXT	EXT	UTIL 1	UTIL 2	CAL #	LEG	PROBE
58	92	0.22	113	P 2	TWD	9	DBH	-1.73		TEC	TEH	NEW		87	HOT	600UL
58	98	0.26	46	P 2	TWD	12	DBH	-2.01		TEC	TEH			90	HOT	600UL
		0.27	52	P 2	TWD	12	DBH	-2.01		TEC	TEH			90	HOT	600UL
58	122	0.44	41	P 2	TWD	16	02H	-1.24		TEH	TEC			46	COLD	600UL
59	11	0.29	132	P 2	TWD	14	VH3	-0.88		TEC	TEH			81	HOT	600UL
		0.29	132	P 2	TWD	14	VH3	-0.88		TEC	TEH			81	HOT	600UL
59	19	0.27	143	P 2	TWD	13	VH3	-0.90		TEC	TEH			85	HOT	600UL
		0.26	144	P 2	TWD	13	VH3	-0.90		TEC	TEH			85	HOT	600UL
59	25	0.37	143	P 2	TWD	16	VH3	-0.85		TEC	TEH			88	HOT	600UL
		0.36	140	P 2	TWD	16	VH3	-0.85		TEC	TEH			88	HOT	600UL
59	83	1.14	74	P 2	TWD	32	DBH	+1.76		TEH	TEC			22	COLD	600UL
		1.14	74	P 2	TWD	32	DBH	+1.76		TEH	TEC			22	COLD	600UL
59	85	0.86	38	P 2	TWD	27	DBH	+2.00		TEH	TEC			22	COLD	600UL
		0.85	37	P 2	TWD	27	DBH	+2.00		TEH	TEC			22	COLD	600UL
59	91	0.32	103	P 2	TWD	13	DBC	-1.57		TEC	TEH			87	HOT	600UL
		0.17	113	P 2	TWD	7	DBC	+1.80		TEC	TEH	NEW		87	HOT	600UL
		0.32	103	P 2	TWD	13	DBC	-1.57		TEC	TEH			87	HOT	600UL
		0.81	106	P 6	TWD	34	DBC	-1.74	TO+1.82	DBC	DBC	LAR		131	COLD	580FH
59	93	0.39	73	P 2	TWD	16	DBH	-1.38		TEC	TEH			87	HOT	600UL
		0.39	73	P 2	TWD	16	DBH	-1.38		TEC	TEH			87	HOT	600UL
59	99	0.20	127	P 2	TWD	9	DBH	-1.96		TEC	TEH	NEW		90	HOT	600UL
59	117	0.35	44	P 2	TWD	14	08H	-1.04		TEH	TEC			62	COLD	600UL
		0.43	63	P 2	TWD	16	01H	+0.85		TEH	TEC			62	COLD	600UL
		0.35	44	P 2	TWD	14	08H	-1.04		TEH	TEC			62	COLD	600UL
60	22	0.49	68	P 2	TWD	18	VH3	-0.12		TEC	TEH			84	HOT	600UL
		0.40	80	P 2	TWD	15	VH3	-0.12		TEC	TEH			84	HOT	600UL
60	26	0.45	148	P 2	TWD	18	VH3	-0.89		TEC	TEH			88	HOT	600UL
		0.44	148	P 2	TWD	19	VH3	-0.89		TEC	TEH			88	HOT	600UL
60	30	0.48	129	P 2	TWD	19	VH3	-0.97		TEC	TEH			88	HOT	600UL
		0.46	125	P 2	TWD	19	VH3	-0.97		TEC	TEH			88	HOT	600UL
60	32	0.32	71	P 2	TWD	14	VC3	+0.73		TEC	TEH			88	HOT	600UL
		0.29	65	P 2	TWD	13	VSM	-0.81		TEC	TEH	NEW		88	HOT	600UL
		0.32	71	P 2	TWD	14	VC3	+0.73		TEC	TEH			88	HOT	600UL
60	84	0.44	155	P 2	TWD	17	DBH	+1.41		TEH	TEC			22	COLD	600UL
		0.47	143	P 2	TWD	18	DBH	+1.41		TEH	TEC			22	COLD	600UL
60	86	0.69	82	P 2	TWD	23	DBH	-1.80		TEH	TEC			22	COLD	600UL
		0.68	80	P 2	TWD	23	DBH	-1.80		TEH	TEC			22	COLD	600UL
60	90	0.60	47	P 2	TWD	22	DBH	+1.97		TEC	TEH			87	HOT	600UL
		0.60	47	P 2	TWD	22	DBH	+1.97		TEC	TEH			87	HOT	600UL
60	92	0.34	15	P 2	TWD	14	DBH	+2.02		TEC	TEH			87	HOT	600UL
		0.34	15	P 2	TWD	14	DBH	+2.02		TEC	TEH			87	HOT	600UL
60	98	0.31	10	P 2	TWD	14	DBH	+1.74		TEC	TEH	NEW		90	HOT	600UL
60	128	0.39	51	P 2	TWD	13	08H	+0.32		TEH	TEC			44	COLD	600UL
		0.40	46	P 2	TWD	14	08H	+0.32		TEH	TEC			44	COLD	600UL
60	166	0.47	149	P 2	TWD	14	VH3	-0.82		TEH	TEC			39	COLD	600UL
		0.44	146	P 2	TWD	13	VH3	-0.82		TEH	TEC			39	COLD	600UL
61	29	0.40	44	P 2	TWD	17	VH3	-0.89		TEC	TEH			88	HOT	600UL
		0.41	46	P 2	TWD	17	VH3	-0.89		TEC	TEH			88	HOT	600UL
61	47	0.23	126	P 2	TWD	14	08H	+0.59		TEH	TEC			28	COLD	600UL
		0.23	126	P 2	TWD	14	08H	+0.59		TEH	TEC			28	COLD	600UL

MAI, MCI, MMI, MVI, SAI, SCI, SVI, 0-100%TWD

QUERY: rpc_icodes_and_0-100%twd.qry

ROW	LINE	VOLTS	DEG	CHN	IND	%TW	LOCATION		EXT	EXT	UTIL 1	UTIL 2	CAL #	LEG	PROBE
61	79	0.59	80	P 2	TWD	21	VSM	+0.81	TEH	TEC			22	COLD	600UL
		0.58	75	P 2	TWD	21	VSM	+0.81	TEH	TEC			22	COLD	600UL
61	81	0.38	12	P 2	TWD	16	DBH	+1.64	TEH	TEC	NEW		23	COLD	600UL
61	83	0.58	127	P 2	TWD	22	DBC	+1.35	TEH	TEC			23	COLD	600UL
		0.60	137	P 2	TWD	22	DBC	+1.35	TEH	TEC			23	COLD	600UL
61	85	0.52	18	P 2	TWD	19	DBH	+1.92	TEH	TEC			22	COLD	600UL
		0.51	18	P 2	TWD	19	DBH	+1.92	TEH	TEC			22	COLD	600UL
61	89	0.81	47	P 2	TWD	27	DBH	+1.38	TEH	TEC			23	COLD	600UL
		0.77	37	P 2	TWD	26	DBH	+1.38	TEH	TEC			23	COLD	600UL
61	91	0.87	104	P 2	TWD	28	DBC	-1.55	TEC	TEH			87	HOT	600UL
		0.87	104	P 2	TWD	28	DBC	-1.55	TEC	TEH			87	HOT	600UL
61	93	1.23	79	P 2	TWD	34	DBH	+1.87	TEC	TEH			87	HOT	600UL
		1.23	79	P 2	TWD	34	DBH	+1.87	TEC	TEH			87	HOT	600UL
61	111	0.45	101	P 2	TWD	16	02H	-1.25	TEH	TEC			48	COLD	600UL
61	119	0.45	75	P 2	TWD	16	02H	-1.25	TEH	TEC			46	COLD	600UL
61	129	0.49	119	P 2	TWD	20	08H	+0.46	TEH	TEC			60	COLD	600UL
		0.49	119	P 2	TWD	20	08H	+0.46	TEH	TEC			60	COLD	600UL
62	80	0.35	23	2	SAI		TSH	-0.83	TSH	TSH	0.0	8.95	14	HOT	580PP
		0.15	23	P 1	SCI		TSH	-0.18	TSH	TSH	0.0	8.95	14	HOT	580PP
		0.19	23	2	SAI		TSH	-1.44	TSH	TSH	0.0	8.95	14	HOT	580PP
		0.28	17	2	MAI		TSH	-1.16	TSH	TSH	0.0	8.95	14	HOT	580PP
62	82	0.29	134	P 2	TWD	13	DBH	-1.70	TEH	TEC	NEW		23	COLD	600UL
62	88	0.28	115	P 2	TWD	12	DBH	-1.38	TEH	TEC	NEW		23	COLD	600UL
62	90	1.01	88	P 2	TWD	30	DBH	+1.93	TEC	TEH			87	HOT	600UL
		1.01	88	P 2	TWD	30	DBH	+1.93	TEC	TEH			87	HOT	600UL
62	96	0.62	115	P 2	TWD	22	DBC	+1.90	TEC	TEH			87	HOT	600UL
		0.62	115	P 2	TWD	22	DBC	+1.90	TEC	TEH			87	HOT	600UL
62	158	0.28	138	P 2	TWD	10	VH3	-1.00	TEH	TEC			37	COLD	600UL
		0.29	145	P 2	TWD	10	VH3	-1.00	TEH	TEC			37	COLD	600UL
62	166	0.31	62	P 2	TWD	12	01H	+0.07	TEH	TEC			38	COLD	600UL
63	35	0.22	31	P 2	TWD	11	DBH	-2.25	TEC	TEH	NEW		94	HOT	600UL
63	83	0.28	86	P 2	TWD	12	DBC	+2.18	TEH	TEC	NEW		22	COLD	600UL
63	89	0.22	54	P 2	TWD	9	DBC	+2.23	TEH	TEC	NEW		22	COLD	600UL
63	91	0.41	148	P 2	TWD	16	DBC	-1.82	TEC	TEH			87	HOT	600UL
		0.41	148	P 2	TWD	16	DBC	-1.82	TEC	TEH			87	HOT	600UL
64	54	0.40	63	P 2	TWD	14	08H	-0.35	TEH	TEC			26	COLD	600UL
		0.36	56	P 2	TWD	13	08H	-0.35	TEH	TEC			26	COLD	600UL
64	104	0.42	129	P 2	TWD	12	02H	-1.21	TEH	TEC			53	COLD	600UL
64	118	0.39	51	P 2	TWD	14	08H	-1.12	TEH	TEC			46	COLD	600UL
		0.45	46	P 2	TWD	16	08H	-1.12	TEH	TEC			46	COLD	600UL
64	128	0.40	129	P 2	TWD	13	08H	+0.40	TEH	TEC			44	COLD	600UL
		0.40	129	P 2	TWD	14	08H	+0.40	TEH	TEC			44	COLD	600UL
64	166	0.40	126	P 2	TWD	15	VH3	-0.59	TEH	TEC			38	COLD	600UL
		0.40	126	P 2	TWD	15	VH3	-0.59	TEH	TEC			38	COLD	600UL
65	11	0.29	134	P 2	TWD	13	VH3	-0.77	TEC	TEH			80	HOT	600UL
		0.29	134	P 2	TWD	13	VH3	-0.77	TEC	TEH			80	HOT	600UL
65	19	0.31	145	P 2	TWD	13	VH3	-0.83	TEC	TEH			84	HOT	600UL
		0.32	132	P 2	TWD	13	VH3	-0.83	TEC	TEH			84	HOT	600UL

MAI, MCI, MMI, MVI, SAI, SCI, SVI, 0-100%TWD

QUERY: rpc_icodes_and_0-100%twd.qry

ROW	LINE	VOLTS	DEG	CHN	IND	%TW	LOCATION		EXT	EXT	UTIL 1	UTIL 2	CAL #	LEG	PROBE
65	29	0.30	146	P 2	TWD	14	VH3 +0.79		TEC	TEH			88	HOT	600UL
		0.34	160	P 2	TWD	15	VH3 -0.77		TEC	TEH			88	HOT	600UL
		0.34	158	P 2	TWD	15	VH3 -0.77		TEC	TEH			88	HOT	600UL
		0.31	147	P 2	TWD	14	VH3 +0.79		TEC	TEH			88	HOT	600UL
65	69	0.32	153	P 2	TWD	12	08H -0.94		TEH	TEC			24	COLD	600UL
		0.36	145	P 2	TWD	13	08H -0.94		TEH	TEC			24	COLD	600UL
65	85	0.37	15	P 2	TWD	16	DBH +2.02		TEH	TEC	NEW		23	COLD	600UL
65	89	0.26	118	P 2	TWD	12	DBC -1.23		TEH	TEC			23	COLD	600UL
		0.30	129	P 2	TWD	14	DBC +1.47		TEH	TEC	NEW		23	COLD	600UL
		0.58	103	P 6	TWD	27	DBC -1.69	TO+1.84	DBC	DBC	LAR		131	COLD	580FH
		0.42	51	P 2	TWD	17	DBC -1.23		TEH	TEC			23	COLD	600UL
65	91	0.23	31	P 2	TWD	10	DBC -1.59		TEC	TEH	NEW		87	HOT	600UL
65	155	0.29	142	P 2	TWD	11	VH3 -0.88		TEH	TEC			36	COLD	600UL
		0.29	142	P 2	TWD	11	VH3 -0.88		TEH	TEC			36	COLD	600UL
65	161	0.52	87	P 2	TWD	18	VH3 -0.80		TEH	TEC			37	COLD	600UL
		0.52	87	P 2	TWD	18	VH3 -0.80		TEH	TEC			37	COLD	600UL
65	163	0.36	121	P 2	TWD	13	VH3 -0.74		TEH	TEC			37	COLD	600UL
		0.34	64	P 2	TWD	13	VH3 +0.90		TEH	TEC			37	COLD	600UL
		0.34	61	P 2	TWD	11	VH3 +0.90		TEH	TEC			37	COLD	600UL
		0.32	114	P 2	TWD	11	VH3 -0.74		TEH	TEC			37	COLD	600UL
65	165	0.34	94	P 2	TWD	11	01C -0.96		TEH	TEC			37	COLD	600UL
66	14	0.24	140	P 2	TWD	12	04C -0.17		TEC	TEH			81	HOT	600UL
66	40	0.23	83	P 2	TWD	11	DBC +1.72		TEC	TEH	NEW		94	HOT	600UL
66	74	0.35	158	P 2	TWD	14	DBH +1.42		TEH	TEC	NEW		22	COLD	600UL
66	78	0.30	117	P 2	TWD	13	02H -0.27		TEH	TEC			23	COLD	600UL
67	45	0.16	80	P 2	TWD	8	08H +0.29		TEC	TEH			96	HOT	600UL
		0.16	81	P 2	TWD	7	08H +0.29		TEC	TEH			96	HOT	600UL
67	89	0.44	64	P 2	TWD	17	DBC -1.94		TEH	TEC			22	COLD	600UL
		0.45	90	P 2	TWD	17	DBC -1.94		TEH	TEC			22	COLD	600UL
67	143	0.44	101	P 2	TWD	16	VH3 +0.90		TEH	TEC			34	COLD	600UL
		0.44	101	P 2	TWD	16	VH3 +0.90		TEH	TEC			34	COLD	600UL
68	14	0.44	111	P 2	TWD	19	VH3 -0.79		TEC	TEH			80	HOT	600UL
		0.44	111	P 2	TWD	19	VH3 -0.79		TEC	TEH			80	HOT	600UL
68	18	0.16	40	P 1	SCI		TSH -0.11		TSH	TSH	0.48	10.10	33	HOT	580PP
68	24	0.36	148	P 2	TWD	14	VH3 -0.85		TEC	TEH			84	HOT	600UL
		0.38	146	P 2	TWD	15	VH3 -0.85		TEC	TEH			84	HOT	600UL
68	68	0.35	63	P 2	TWD	14	08H -0.98		TEH	TEC			24	COLD	600UL
		0.35	52	P 2	TWD	13	08H -0.98		TEH	TEC			24	COLD	600UL
68	76	0.33	104	P 2	TWD	13	04H +0.80		TEH	TEC			22	COLD	600UL
68	88	0.32	94	P 2	TWD	13	DBH -1.31		TEH	TEC	NEW		22	COLD	600UL
68	94	0.55	126	P 2	TWD	20	DBH -2.05		TEC	TEH			87	HOT	600UL
		0.58	117	P 2	TWD	21	DBH -2.05		TEC	TEH			87	HOT	600UL
68	128	0.46	122	2	SVI		DBH +2.45	TO+2.97	DBH	DBH	1.28	0.45	154	HOT	580FH
68	154	0.44	110	P 2	TWD	16	VH3 -0.88		TEH	TEC			37	COLD	600UL
		0.41	102	P 2	TWD	13	VH3 -0.88		TEH	TEC			37	COLD	600UL
68	156	0.35	110	P 2	TWD	13	VH3 -0.86		TEH	TEC			37	COLD	600UL
		0.33	103	P 2	TWD	11	VH3 -0.86		TEH	TEC			37	COLD	600UL
		0.37	140	P 2	TWD	12	05C +1.09		TEH	TEC			37	COLD	600UL

MAI, MCI, MMI, MVI, SAI, SCI, SVI, 0-100%TWD

QUERY: rpc_icodes_and_0-100%twd.qry

ROW	LINE	VOLTS	DEG	CHN	IND	%TW	LOCATION		EXT	EXT	UTIL 1	UTIL 2	CAL #	LEG	PROBE
69	15	0.39	132	P 2	TWD	15	VH3	-0.83	TEC	TEH			84	HOT	600UL
		0.39	132	P 2	TWD	15	VH3	-0.83	TEC	TEH			84	HOT	600UL
69	21	0.41	119	P 2	TWD	16	VH3	-0.71	TEC	TEH			84	HOT	600UL
		0.41	119	P 2	TWD	16	VH3	-0.71	TEC	TEH			84	HOT	600UL
69	27	0.39	134	P 2	TWD	17	VH3	-0.77	TEC	TEH			88	HOT	600UL
		0.38	131	P 2	TWD	17	VH3	-0.77	TEC	TEH			88	HOT	600UL
69	59	0.29	112	P 2	TWD	12	DBC	+2.00	TEH	TEC	NEW		24	COLD	600UL
69	89	0.51	82	P 2	TWD	20	DBC	-1.45	TEH	TEC			23	COLD	600UL
		0.54	83	P 2	TWD	21	DBC	-1.45	TEH	TEC			23	COLD	600UL
69	91	0.67	60	P 2	TWD	24	DBH	+1.74	TEC	TEH			87	HOT	600UL
		0.68	61	P 2	TWD	24	DBH	+1.74	TEC	TEH			87	HOT	600UL
69	163	0.29	117	P 2	TWD	11	VH3	-0.78	TEH	TEC			37	COLD	600UL
		0.25	106	P 2	TWD	9	VH3	-0.78	TEH	TEC			37	COLD	600UL
70	50	0.24	115	P 2	TWD	11	08H	-0.98	TEH	TEC			27	COLD	600UL
		0.24	115	P 2	TWD	11	08H	-0.98	TEH	TEC			27	COLD	600UL
70	114	0.32	120	P 2	TWD	14	07H	-0.79	TEH	TEC			49	COLD	600UL
		0.32	120	P 2	TWD	14	07H	-0.79	TEH	TEC			49	COLD	600UL
70	138	0.42	61	P 2	TWD	15	VC3	-0.86	TEH	TEC			35	COLD	600UL
		0.42	61	P 2	TWD	15	VC3	-0.86	TEH	TEC			35	COLD	600UL
70	146	0.29	45	P 2	TWD	11	01H	+0.83	TEH	TEC			35	COLD	600UL
70	158	0.27	150	P 2	TWD	10	VH3	-0.98	TEH	TEC			37	COLD	600UL
		0.26	150	P 2	TWD	9	VH3	-0.98	TEH	TEC			37	COLD	600UL
70	162	0.38	142	P 2	TWD	14	08H	+0.86	TEH	TEC			36	COLD	600UL
		0.38	139	P 2	TWD	14	08H	+0.86	TEH	TEC			36	COLD	600UL
70	164	0.51	49	P 2	TWD	17	08H	+1.03	TEH	TEC			36	COLD	600UL
		0.55	41	P 2	TWD	18	08H	+1.03	TEH	TEC			36	COLD	600UL
71	15	0.13	81	P 2	TWD	6	VH3	-1.04	TEC	TEH			85	HOT	600UL
		0.14	61	P 2	TWD	7	VH3	-1.04	TEC	TEH			85	HOT	600UL
71	31	0.17	114	2	SAI		02H	+3.96	02H	02H	0.38		127	HOT	580PP
72	14	0.42	144	P 2	TWD	18	DBC	-1.79	TEC	TEH			80	HOT	600UL
		0.42	143	P 2	TWD	18	DBC	-1.79	TEC	TEH			80	HOT	600UL
72	34	0.56	106	P 2	TWD	22	VSM	-0.85	TEC	TEH			88	HOT	600UL
		0.56	110	P 2	TWD	22	VSM	-0.85	TEC	TEH			88	HOT	600UL
72	42	0.42	124	P 2	TWD	16	VH3	+0.69	TEC	TEH			95	HOT	600UL
		0.49	139	P 2	TWD	18	VH3	+0.12	TEC	TEH			95	HOT	600UL
		0.42	136	P 2	TWD	15	VH3	-0.40	TEC	TEH			95	HOT	600UL
		0.42	126	P 2	TWD	16	VH3	+0.69	TEC	TEH			95	HOT	600UL
		0.49	139	P 2	TWD	18	VH3	+0.12	TEC	TEH			95	HOT	600UL
		0.42	136	P 2	TWD	16	VH3	-0.40	TEC	TEH			95	HOT	600UL
72	44	0.49	126	P 2	TWD	18	DBC	+2.20	TEC	TEH			95	HOT	600UL
		0.49	126	P 2	TWD	18	DBC	+2.20	TEC	TEH			95	HOT	600UL
72	58	0.44	68	P 2	TWD	15	08H	+0.71	TEH	TEC			26	COLD	600UL
		0.44	68	P 2	TWD	15	08H	+0.71	TEH	TEC			26	COLD	600UL
72	148	0.19	123	P 2	TWD	6	VC3	+0.94	TEH	TEC			34	COLD	600UL
		0.20	123	P 2	TWD	8	VC3	+0.94	TEH	TEC			34	COLD	600UL
73	31	0.36	97	P 2	TWD	16	VH3	+0.91	TEC	TEH			88	HOT	600UL
		0.35	93	P 2	TWD	16	VH3	+0.91	TEC	TEH			88	HOT	600UL
73	33	0.32	151	P 2	TWD	14	VH3	+0.73	TEC	TEH			88	HOT	600UL
		0.31	150	P 2	TWD	14	VH3	+0.73	TEC	TEH			88	HOT	600UL
		0.53	99	P 2	TWD	21	DBH	+1.76	TEC	TEH			88	HOT	600UL
		0.53	99	P 2	TWD	21	DBH	+1.76	TEC	TEH			88	HOT	600UL

MAI, MCI, MMI, MVI, SAI, SCI, SVI, 0-100%TWD

QUERY: rpc_icodes_and_0-100%twd.qry

ROW	LINE	VOLTS	DEG	CHN	IND	%TW	LOCATION		EXT	EXT	UTIL 1	UTIL 2	CAL #	LEG	PROBE
73	45	0.44	75	P 2	TWD	17	VC3	+0.19	TEC	TEH			95	HOT	600UL
		0.48	110	P 2	TWD	17	VC3	+0.19	TEC	TEH			95	HOT	600UL
73	51	0.53	127	P 2	TWD	18	VH3	+0.18	TEH	TEC			26	COLD	600UL
		0.50	147	P 2	TWD	17	VC3	+0.12	TEH	TEC			26	COLD	600UL
		0.31	73	P 2	TWD	11	VH3	+0.67	TEH	TEC			26	COLD	600UL
		0.32	97	P 2	TWD	11	VSM	+0.32	TEH	TEC			26	COLD	600UL
		0.39	85	P 2	TWD	14	VH3	+0.18	TEH	TEC			26	COLD	600UL
		0.31	74	P 2	TWD	11	VH3	+0.67	TEH	TEC			26	COLD	600UL
		0.28	122	P 2	TWD	10	VSM	+0.32	TEH	TEC			26	COLD	600UL
		0.50	147	P 2	TWD	17	VC3	+0.12	TEH	TEC			26	COLD	600UL
73	53	0.61	161	P 2	TWD	20	VC3	+0.16	TEH	TEC			26	COLD	600UL
		0.70	19	P 2	TWD	22	VC3	+0.77	TEH	TEC			26	COLD	600UL
		0.70	19	P 2	TWD	22	VC3	+0.77	TEH	TEC			26	COLD	600UL
		0.61	161	P 2	TWD	20	VC3	+0.16	TEH	TEC			26	COLD	600UL
73	61	0.55	134	P 2	TWD	19	VSM	+0.88	TEH	TEC			24	COLD	600UL
		0.55	135	P 2	TWD	19	VSM	+0.88	TEH	TEC			24	COLD	600UL
73	65	0.38	72	P 2	TWD	15	VH3	-0.86	TEH	TEC			24	COLD	600UL
		0.38	72	P 2	TWD	15	VH3	-0.86	TEH	TEC			24	COLD	600UL
73	85	0.19	112	P 2	TWD	8	DBC	+1.59	TEH	TEC	NEW		23	COLD	600UL
73	89	0.35	135	P 2	TWD	16	DBH	+1.72	TEH	TEC	NEW		23	COLD	600UL
73	107	0.42	145	P 2	TWD	12	VH3	-0.80	TEH	TEC			53	COLD	600UL
		0.28	155	P 2	TWD	8	VH3	+0.00	TEH	TEC			53	COLD	600UL
		0.64	146	P 2	TWD	18	VH3	+0.70	TEH	TEC			53	COLD	600UL
		0.64	146	P 2	TWD	18	VH3	+0.70	TEH	TEC			53	COLD	600UL
		0.43	143	P 2	TWD	13	VH3	-0.80	TEH	TEC			53	COLD	600UL
		0.30	152	P 2	TWD	8	VH3	+0.00	TEH	TEC			53	COLD	600UL
73	111	0.23	117	P 2	TWD	9	VSM	-0.61	TEH	TEC			48	COLD	600UL
		0.42	154	P 2	TWD	15	VSM	+0.83	TEH	TEC			48	COLD	600UL
		0.42	154	P 2	TWD	15	VSM	+0.83	TEH	TEC			48	COLD	600UL
		0.18	146	P 2	TWD	8	VSM	-0.61	TEH	TEC			48	COLD	600UL
73	113	0.54	75	P 2	TWD	19	02H	-1.25	TEH	TEC			48	COLD	600UL
73	137	0.36	51	P 2	TWD	13	02H	-1.23	TEH	TEC			35	COLD	600UL
73	143	1.13	80	P 2	TWD	30	VH3	+0.90	TEH	TEC			35	COLD	600UL
		1.13	80	P 2	TWD	30	VH3	+0.90	TEH	TEC			35	COLD	600UL
73	159	0.50	107	P 2	TWD	18	VH3	-0.82	TEH	TEC			37	COLD	600UL
		0.50	107	P 2	TWD	18	VH3	-0.82	TEH	TEC			37	COLD	600UL
74	20	0.18	59	P 2	TWD	9	DBH	+2.00	TEC	TEH			85	HOT	600UL
		0.18	59	P 2	TWD	9	DBH	+2.00	TEC	TEH			85	HOT	600UL
74	34	0.26	163	P 2	TWD	12	DBH	+2.25	TEC	TEH	NEW		89	HOT	600UL
74	38	0.27	150	P 2	TWD	13	DBH	+2.25	TEC	TEH			94	HOT	600UL
		0.26	150	P 2	TWD	13	DBH	+2.25	TEC	TEH			94	HOT	600UL
74	62	0.32	105	P 2	TWD	13	DBH	+1.77	TEH	TEC	NEW		24	COLD	600UL
74	84	0.35	78	P 2	TWD	15	DBC	-1.25	TEH	TEC			23	COLD	600UL
		0.35	78	P 2	TWD	15	DBC	-1.25	TEH	TEC			23	COLD	600UL
74	94	0.26	111	P 2	TWD	11	DBH	-1.99	TEC	TEH			87	HOT	600UL
		0.27	110	P 2	TWD	11	DBH	-1.99	TEC	TEH			87	HOT	600UL
74	118	0.56	92	P 2	TWD	20	08H	+0.94	TEH	TEC			62	COLD	600UL
		0.56	92	P 2	TWD	20	08H	+0.94	TEH	TEC			62	COLD	600UL
74	160	0.51	71	P 2	TWD	17	08C	-0.25	TEH	TEC			36	COLD	600UL
		0.51	71	P 2	TWD	17	08C	-0.25	TEH	TEC			36	COLD	600UL
75	15	0.07	25	P 2	TWD	3	DBC	-1.82	TEC	TEH			85	HOT	600UL
		0.15	133	P 4	TWD	14	DBC	+2.05	DBC	DBC	LAR		116	COLD	560FH
		0.07	25	P 2	TWD	3	DBC	-1.82	TEC	TEH			85	HOT	600UL

MAI, MCI, MMI, MVI, SAI, SCI, SVI, 0-100%TWD

QUERY: rpc_icodes_and_0-100%twd.qry

ROW	LINE	VOLTS	DEG	CHN	IND	%TW	LOCATION		EXT	EXT	UTIL 1	UTIL 2	CAL #	LEG	PROBE
75	31	0.18	92	P 2	TWD	9	VH3	+0.84	TEC	TEH			89	HOT	600UL
		0.16	67	P 2	TWD	8	DBC	+1.56	TEC	TEH	NEW		89	HOT	600UL
		0.18	92	P 2	TWD	9	VH3	+0.84	TEC	TEH			89	HOT	600UL
75	33	0.25	105	P 2	TWD	12	VC3	+0.72	TEC	TEH			89	HOT	600UL
		0.36	33	P 2	TWD	16	DBC	-1.53	TEC	TEH	NEW		89	HOT	600UL
		0.25	105	P 2	TWD	12	VC3	+0.72	TEC	TEH			89	HOT	600UL
75	37	0.16	143	P 2	TWD	8	DBC	+2.20	TEC	TEH	NEW		93	HOT	600UL
75	45	0.39	143	P 2	TWD	16	VSM	+0.82	TEC	TEH			96	HOT	600UL
		0.28	158	P 2	TWD	13	VH3	+0.74	TEC	TEH			96	HOT	600UL
		0.29	82	P 2	TWD	13	VH3	-0.06	TEC	TEH			96	HOT	600UL
		0.33	137	P 2	TWD	14	VSM	+0.82	TEC	TEH			96	HOT	600UL
		0.28	157	P 2	TWD	13	VH3	+0.74	TEC	TEH			96	HOT	600UL
		0.28	96	P 2	TWD	12	VH3	-0.06	TEC	TEH			96	HOT	600UL
75	47	0.30	98	P 2	TWD	11	VH3	+0.12	TEH	TEC			29	COLD	600UL
		0.28	67	P 2	TWD	10	VC3	+0.22	TEH	TEC			29	COLD	600UL
		0.23	136	P 2	TWD	9	DBC	+1.73	TEH	TEC			29	COLD	600UL
		0.30	98	P 2	TWD	11	VH3	+0.12	TEH	TEC			29	COLD	600UL
		0.23	136	P 2	TWD	9	DBC	+1.73	TEH	TEC			29	COLD	600UL
		0.27	68	P 2	TWD	10	VC3	+0.22	TEH	TEC			29	COLD	600UL
75	57	0.14	154	P 2	TWD	6	VH3	+0.20	TEH	TEC			27	COLD	600UL
		0.33	143	P 2	TWD	15	VH3	+0.80	TEH	TEC			27	COLD	600UL
		0.37	139	P 2	TWD	17	VSM	+0.82	TEH	TEC			27	COLD	600UL
		0.37	139	P 2	TWD	16	VSM	+0.82	TEH	TEC			27	COLD	600UL
		0.33	143	P 2	TWD	15	VH3	+0.80	TEH	TEC			27	COLD	600UL
		0.15	155	P 2	TWD	8	VH3	+0.20	TEH	TEC			27	COLD	600UL
75	75	0.43	115	P 2	TWD	17	VSM	-0.78	TEH	TEC			23	COLD	600UL
		0.37	136	P 2	TWD	16	VSM	+0.83	TEH	TEC			23	COLD	600UL
		0.43	117	P 2	TWD	18	VSM	-0.78	TEH	TEC			23	COLD	600UL
		0.38	137	P 2	TWD	16	VSM	+0.83	TEH	TEC			23	COLD	600UL
75	99	0.23	27	P 2	TWD	10	DBH	-1.40	TEC	TEH	NEW		90	HOT	600UL
76	22	0.23	0	P 2	TWD	10	DBC	+1.94	TEC	TEH			84	HOT	600UL
		0.23	50	P 2	TWD	10	DBC	+1.94	TEC	TEH			84	HOT	600UL
76	28	0.13	152	P 2	TWD	6	DBC	+1.47	TEC	TEH			88	HOT	600UL
		0.19	133	P 2	TWD	9	DBC	+1.47	TEC	TEH			88	HOT	600UL
76	32	0.60	54	P 2	TWD	23	DBH	+2.01	TEC	TEH	NEW		88	HOT	600UL
76	34	0.58	82	P 2	TWD	22	VH3	+0.89	TEC	TEH			88	HOT	600UL
		0.43	156	P 2	TWD	18	DBC	+1.95	TEC	TEH			88	HOT	600UL
		0.23	156	P 2	TWD	11	DBC	+1.95	TEC	TEH			88	HOT	600UL
		0.58	85	P 2	TWD	22	VH3	+0.89	TEC	TEH			88	HOT	600UL
		0.47	154	P 2	TWD	19	DBH	+2.14	TEC	TEH	NEW		88	HOT	600UL
76	36	0.43	129	P 2	TWD	17	VH3	-0.19	TEC	TEH			93	HOT	600UL
		0.58	107	P 2	TWD	21	VH3	-0.71	TEC	TEH			93	HOT	600UL
		0.32	122	P 2	TWD	14	DBC	+1.99	TEC	TEH			93	HOT	600UL
		0.32	126	P 2	TWD	12	DBC	+1.99	TEC	TEH			93	HOT	600UL
		0.43	129	P 2	TWD	16	VH3	-0.19	TEC	TEH			93	HOT	600UL
		0.58	107	P 2	TWD	21	VH3	-0.71	TEC	TEH			93	HOT	600UL
76	40	0.38	78	P 2	TWD	16	VH3	+0.69	TEC	TEH			93	HOT	600UL
		0.18	101	P 2	TWD	8	DBC	+1.88	TEC	TEH	NEW		93	HOT	600UL
		0.38	78	P 2	TWD	16	VH3	+0.69	TEC	TEH			93	HOT	600UL
76	48	0.54	113	P 2	TWD	25	VH3	-0.70	TEH	TEC			28	COLD	600UL
		0.42	141	P 2	TWD	21	VSM	-0.94	TEH	TEC			28	COLD	600UL
		0.42	143	P 2	TWD	21	VSM	+0.88	TEH	TEC			28	COLD	600UL
		0.37	62	P 2	TWD	19	VC3	+0.90	TEH	TEC			28	COLD	600UL
		0.17	133	P 2	TWD	11	VH3	+0.92	TEH	TEC			28	COLD	600UL
		0.52	110	P 2	TWD	24	VH3	-0.70	TEH	TEC			28	COLD	600UL
		0.17	133	P 2	TWD	11	VH3	+0.92	TEH	TEC			28	COLD	600UL
		0.42	141	P 2	TWD	21	VSM	-0.94	TEH	TEC			28	COLD	600UL
		0.42	143	P 2	TWD	21	VSM	+0.88	TEH	TEC			28	COLD	600UL
		0.37	62	P 2	TWD	19	VC3	+0.90	TEH	TEC			28	COLD	600UL
76	62	0.31	123	P 2	TWD	13	04C	+0.91	TEH	TEC			25	COLD	600UL

MAI, MCI, MMI, MVI, SAI, SCI, SVI, 0-100%TWD

QUERY: rpc_icodes_and_0-100%twd.qry

ROW	LINE	VOLTS	DEG	CHN	IND	%TW	LOCATION		EXT	EXT	UTIL 1	UTIL 2	CAL #	LEG	PROBE
76	68	0.58	63	P 2	TWD	20	07H	+0.94	TEH	TEC			24	COLD	600UL
		0.58	63	P 2	TWD	20	07H	+0.94	TEH	TEC			24	COLD	600UL
76	72	0.40	58	P 2	TWD	16	VH3	-0.90	TEH	TEC			22	COLD	600UL
		0.40	51	P 2	TWD	16	VH3	-0.90	TEH	TEC			22	COLD	600UL
76	90	0.38	62	P 2	TWD	15	08C	-0.17	TEC	TEH			87	HOT	600UL
		0.38	62	P 2	TWD	15	08C	-0.17	TEC	TEH			87	HOT	600UL
76	114	0.62	106	P 2	TWD	21	VH3	+0.53	TEH	TEC			48	COLD	600UL
		0.62	106	P 2	TWD	21	VH3	+0.53	TEH	TEC			48	COLD	600UL
76	132	0.39	145	P 2	TWD	14	VH3	+0.78	TEH	TEC			35	COLD	600UL
		0.39	145	P 2	TWD	14	VH3	+0.78	TEH	TEC			35	COLD	600UL
76	136	0.51	120	P 2	TWD	19	VH3	+1.03	TEH	TEC			34	COLD	600UL
		0.52	134	P 2	TWD	19	VSM	-0.80	TEH	TEC			34	COLD	600UL
		0.51	120	P 2	TWD	19	VH3	+1.03	TEH	TEC			34	COLD	600UL
		0.52	134	P 2	TWD	19	VSM	-0.80	TEH	TEC			34	COLD	600UL
77	15	0.33	116	P 2	TWD	13	DBC	-1.25	TEC	TEH			84	HOT	600UL
		0.33	116	P 2	TWD	13	DBC	-1.25	TEC	TEH			84	HOT	600UL
77	17	0.19	64	P 2	TWD	8	DBC	+1.29	TEC	TEH			84	HOT	600UL
		0.17	3	P 2	TWD	8	DBC	+1.29	TEC	TEH			84	HOT	600UL
77	19	0.17	56	P 2	TWD	7	DBC	+2.03	TEC	TEH			84	HOT	600UL
		0.15	48	P 2	TWD	7	DBC	+2.03	TEC	TEH			84	HOT	600UL
77	27	0.28	19	P 2	TWD	13	DBC	+1.53	TEC	TEH			88	HOT	600UL
		0.28	19	P 2	TWD	13	DBC	+1.53	TEC	TEH			88	HOT	600UL
77	29	0.33	137	P 2	TWD	15	VC3	-0.75	TEC	TEH			88	HOT	600UL
		0.16	97	P 2	TWD	8	DBC	-1.60	TEC	TEH			88	HOT	600UL
		0.33	139	P 2	TWD	15	VC3	-0.75	TEC	TEH			88	HOT	600UL
		0.17	96	P 2	TWD	8	DBC	-1.60	TEC	TEH			88	HOT	600UL
77	31	0.32	72	P 2	TWD	14	VC3	+0.81	TEC	TEH			88	HOT	600UL
		0.67	132	P 2	TWD	24	VSM	+0.85	TEC	TEH			88	HOT	600UL
		0.42	121	P 2	TWD	18	DBH	+2.25	TEC	TEH			88	HOT	600UL
		0.32	67	P 2	TWD	15	VC3	+0.81	TEC	TEH			88	HOT	600UL
		0.65	130	P 2	TWD	24	VSM	+0.85	TEC	TEH			88	HOT	600UL
		0.46	145	P 2	TWD	19	DBH	+2.25	TEC	TEH			88	HOT	600UL
77	57	0.40	26	P 2	TWD	14	VC3	+0.20	TEH	TEC			26	COLD	600UL
		0.67	82	P 2	TWD	21	VC3	+0.79	TEH	TEC			26	COLD	600UL
		0.40	26	P 2	TWD	14	VC3	+0.20	TEH	TEC			26	COLD	600UL
		0.67	82	P 2	TWD	21	VC3	+0.79	TEH	TEC			26	COLD	600UL
77	113	0.32	113	P 2	TWD	12	VH3	+0.94	TEH	TEC			48	COLD	600UL
		0.35	134	P 2	TWD	13	VH3	+0.94	TEH	TEC			48	COLD	600UL
77	131	0.39	132	P 2	TWD	14	VH3	-0.84	TEH	TEC			35	COLD	600UL
		0.39	125	P 2	TWD	14	VH3	-0.84	TEH	TEC			35	COLD	600UL
77	161	0.36	45	P 2	TWD	13	07C	-1.00	TEH	TEC			37	COLD	600UL
		0.28	146	P 2	TWD	11	08C	-1.04	TEH	TEC			37	COLD	600UL
		0.27	147	P 2	TWD	10	DBH	+1.82	TEH	TEC	NEW		37	COLD	600UL
		0.31	145	P 2	TWD	10	08C	-1.04	TEH	TEC			37	COLD	600UL
		0.37	65	P 2	TWD	12	07C	-1.00	TEH	TEC			37	COLD	600UL
78	20	0.32	100	P 2	TWD	15	DBH	+1.95	TEC	TEH			85	HOT	600UL
		0.32	100	P 2	TWD	15	DBH	+1.95	TEC	TEH			85	HOT	600UL
78	26	0.84	66	P 2	TWD	28	VC3	+0.96	TEC	TEH			89	HOT	600UL
		0.35	88	P 2	TWD	16	VC3	-0.70	TEC	TEH			89	HOT	600UL
		0.84	65	P 2	TWD	28	VC3	+0.96	TEC	TEH			89	HOT	600UL
		0.36	89	P 2	TWD	15	VC3	-0.70	TEC	TEH			89	HOT	600UL
78	30	0.68	114	P 2	TWD	25	VSM	+0.74	TEC	TEH			89	HOT	600UL
		0.24	30	P 2	TWD	11	VSM	+0.04	TEC	TEH			89	HOT	600UL
		0.64	117	P 2	TWD	24	VSM	+0.74	TEC	TEH			89	HOT	600UL
		0.24	30	P 2	TWD	11	VSM	+0.04	TEC	TEH			89	HOT	600UL

MAI, MCI, MMI, MVI, SAI, SCI, SVI, 0-100%TWD

QUERY: rpc_icodes_and_0-100%twd.qry

ROW	LINE	VOLTS	DEG	CHN	IND	%TW	LOCATION		EXT	EXT	UTIL 1	UTIL 2	CAL #	LEG	PROBE
78	38	0.25	41	P 2	TWD	12	DBH	+1.84	TEC	TEH	NEW		94	HOT	600UL
78	124	0.65	116	P 2	TWD	24	VC3	+0.90	TEH	TEC			60	COLD	600UL
		0.46	88	P 2	TWD	19	VC3	-0.78	TEH	TEC			60	COLD	600UL
		0.76	87	P 2	TWD	26	VH3	+0.88	TEH	TEC			60	COLD	600UL
		0.41	95	P 2	TWD	17	VH3	+0.00	TEH	TEC			60	COLD	600UL
		0.41	95	P 2	TWD	17	VH3	+0.00	TEH	TEC			60	COLD	600UL
		0.76	84	P 2	TWD	26	VH3	+0.88	TEH	TEC			60	COLD	600UL
		0.46	88	P 2	TWD	19	VC3	-0.78	TEH	TEC			60	COLD	600UL
		0.68	109	P 2	TWD	25	VC3	+0.90	TEH	TEC			60	COLD	600UL
79	17	0.34	129	P 2	TWD	14	VH3	-0.89	TEC	TEH			84	HOT	600UL
		0.34	129	P 2	TWD	14	VH3	-0.89	TEC	TEH			84	HOT	600UL
79	21	0.22	121	P 2	TWD	11	DBC	+1.50	TEC	TEH			85	HOT	600UL
		0.48	135	P 2	TWD	21	DBH	+1.88	TEC	TEH			85	HOT	600UL
		0.22	121	P 2	TWD	11	DBC	+1.50	TEC	TEH			85	HOT	600UL
		0.48	135	P 2	TWD	21	DBH	+1.88	TEC	TEH			85	HOT	600UL
79	29	0.28	123	P 2	TWD	13	VC3	-0.98	TEC	TEH			89	HOT	600UL
		0.28	116	P 2	TWD	12	VC3	-0.98	TEC	TEH			89	HOT	600UL
79	47	0.28	101	P 2	TWD	11	VC3	-0.89	TEH	TEC			29	COLD	600UL
		0.28	101	P 2	TWD	11	VC3	-0.89	TEH	TEC			29	COLD	600UL
79	55	0.17	166	P 2	TWD	8	DBH	+1.74	TEH	TEC			27	COLD	600UL
		0.17	166	P 2	TWD	8	DBH	+1.74	TEH	TEC			27	COLD	600UL
79	59	0.40	140	P 2	TWD	16	DBH	+2.10	TEH	TEC	NEW		25	COLD	600UL
79	89	0.34	124	P 2	TWD	14	VH3	+0.97	TEH	TEC			22	COLD	600UL
		0.34	139	P 2	TWD	14	VH3	+0.97	TEH	TEC			22	COLD	600UL
		0.27	73	P 2	TWD	11	DBH	+1.93	TEH	TEC	NEW		22	COLD	600UL
79	115	0.42	81	P 2	TWD	17	VC3	-0.84	TEH	TEC			49	COLD	600UL
		0.25	165	P 2	TWD	12	VH3	+0 78	TEH	TEC			49	COLD	600UL
		0.42	81	P 2	TWD	17	VC3	-0.84	TEH	TEC			49	COLD	600UL
		0.24	163	P 2	TWD	11	VH3	+0.78	TEH	TEC			49	COLD	600UL
79	117	0.70	143	P 2	TWD	23	VC3	+0.86	TEH	TEC			62	COLD	600UL
		0.75	119	P 2	TWD	24	VC3	-0.94	TEH	TEC			62	COLD	600UL
		0.34	142	P 2	TWD	13	07H	-0.79	TEH	TEC			62	COLD	600UL
		0.45	48	P 2	TWD	17	02H	-1.23	TEH	TEC			62	COLD	600UL
		0.34	142	P 2	TWD	13	07H	-0.79	TEH	TEC			62	COLD	600UL
		0.75	119	P 2	TWD	24	VC3	-0.94	TEH	TEC			62	COLD	600UL
		0.70	143	P 2	TWD	23	VC3	+0.86	TEH	TEC			62	COLD	600UL
79	125	0.29	132	P 2	TWD	10	VC3	-0.87	TEH	TEC			44	COLD	600UL
		0.43	101	P 2	TWD	14	VC3	+0.91	TEH	TEC			44	COLD	600UL
		0.30	134	P 2	TWD	10	VC3	-0.87	TEH	TEC			44	COLD	600UL
		0.43	106	P 2	TWD	14	VC3	+0.91	TEH	TEC			44	COLD	600UL
79	131	0.34	86	P 2	TWD	13	VSM	-0.50	TEH	TEC			34	COLD	600UL
		0.35	121	P 2	TWD	13	VSM	-0.50	TEH	TEC			34	COLD	600UL
79	161	0.53	72	P 2	TWD	18	DBH	+1.78	TEH	TEC			36	COLD	600UL
		0.55	90	P 2	TWD	18	DBH	+1.78	TEH	TEC			36	COLD	600UL
80	22	0.25	0	P 2	TWD	10	DBH	+1.95	TEC	TEH			84	HOT	600UL
		0.29	126	P 2	TWD	12	DBH	+1.95	TEC	TEH			84	HOT	600UL
80	38	0.32	102	P 2	TWD	14	VC3	-0.87	TEC	TEH			93	HOT	600UL
		0.19	123	P 2	TWD	9	VC3	+0.66	TEC	TEH			93	HOT	600UL
		0.70	111	P 2	TWD	24	VSM	+0.71	TEC	TEH			93	HOT	600UL
		0.79	141	P 2	TWD	26	VH3	-0.83	TEC	TEH			93	HOT	600UL
		0.60	97	P 2	TWD	22	DBH	+1.76	TEC	TEH			93	HOT	600UL
		0.32	101	P 2	TWD	12	VC3	-0.87	TEC	TEH			93	HOT	600UL
		0.70	110	P 2	TWD	24	VSM	+0.71	TEC	TEH			93	HOT	600UL
		0.60	97	P 2	TWD	22	DBH	+1.76	TEC	TEH			93	HOT	600UL
		0.79	141	P 2	TWD	26	VH3	-0.83	TEC	TEH			93	HOT	600UL
		0.18	96	P 2	TWD	8	VC3	+0.66	TEC	TEH			93	HOT	600UL
80	40	0.19	51	P 2	TWD	9	VC3	+0.67	TEC	TEH			93	HOT	600UL
		0.31	62	P 2	TWD	13	VC3	-0.04	TEC	TEH			93	HOT	600UL
		0.25	153	P 2	TWD	11	VH3	+0.44	TEC	TEH			93	HOT	600UL

MAI, MCI, MMI, MVI, SAI, SCI, SVI, 0-100%TWD

QUERY: rpc_icodes_and_0-100%twd.qry

ROW	LINE	VOLTS	DEG	CHN	IND	%TW	LOCATION		EXT	EXT	UTIL 1	UTIL 2	CAL #	LEG	PROBE
		0.29	80	P 2	TWD	13	VH3	+0.15	TEC	TEH			93	HOT	600UL
		0.26	152	P 2	TWD	10	VH3	+0.44	TEC	TEH			93	HOT	600UL
		0.33	62	P 2	TWD	13	VC3	-0.04	TEC	TEH			93	HOT	600UL
		0.19	51	P 2	TWD	9	VC3	+0.67	TEC	TEH			93	HOT	600UL
		0.29	80	P 2	TWD	13	VH3	+0.15	TEC	TEH			93	HOT	600UL
80	80	0.51	114	P 2	TWD	19	VSM	+0.90	TEH	TEC			22	COLD	600UL
		0.51	108	P 2	TWD	19	VSM	+0.90	TEH	TEC			22	COLD	600UL
80	102	0.72	95	P 2	TWD	19	VC3	-0.90	TEH	TEC			53	COLD	600UL
		0.72	95	P 2	TWD	19	VC3	-0.90	TEH	TEC			53	COLD	600UL
80	140	0.50	115	P 2	TWD	17	VH3	-0.90	TEH	TEC			35	COLD	600UL
		0.43	145	P 2	TWD	16	VH3	+0.78	TEH	TEC			35	COLD	600UL
		1.03	114	P 2	TWD	28	VC3	-0.92	TEH	TEC			35	COLD	600UL
		0.54	131	P 2	TWD	18	VC3	+0.80	TEH	TEC			35	COLD	600UL
		0.50	115	P 2	TWD	17	VH3	-0.90	TEH	TEC			35	COLD	600UL
		0.43	145	P 2	TWD	16	VH3	+0.78	TEH	TEC			35	COLD	600UL
		1.03	114	P 2	TWD	28	VC3	-0.92	TEH	TEC			35	COLD	600UL
		0.54	131	P 2	TWD	18	VC3	+0.80	TEH	TEC			35	COLD	600UL
80	142	0.66	137	P 2	TWD	21	VH3	-0.84	TEH	TEC			35	COLD	600UL
		0.54	149	P 2	TWD	18	VSM	-0.76	TEH	TEC			35	COLD	600UL
		0.57	143	P 2	TWD	19	VC3	-0.86	TEH	TEC			35	COLD	600UL
		0.84	122	P 2	TWD	25	VC3	+0.80	TEH	TEC			35	COLD	600UL
		0.60	133	P 2	TWD	20	VH3	+0.73	TEH	TEC			35	COLD	600UL
		0.28	79	P 2	TWD	11	VSM	+0.92	TEH	TEC			35	COLD	600UL
		0.66	137	P 2	TWD	21	VH3	-0.84	TEH	TEC			35	COLD	600UL
		0.60	133	P 2	TWD	20	VH3	+0.73	TEH	TEC			35	COLD	600UL
		0.54	149	P 2	TWD	18	VSM	-0.76	TEH	TEC			35	COLD	600UL
		0.29	85	P 2	TWD	11	VSM	+0.92	TEH	TEC			35	COLD	600UL
		0.57	143	P 2	TWD	19	VC3	-0.86	TEH	TEC			35	COLD	600UL
		0.84	122	P 2	TWD	25	VC3	+0.80	TEH	TEC			35	COLD	600UL
81	33	0.43	134	P 2	TWD	18	VSM	-0.87	TEC	TEH			88	HOT	600UL
		0.77	130	P 2	TWD	27	VH3	+0.83	TEC	TEH			88	HOT	600UL
		0.54	84	P 2	TWD	21	VH3	+0.06	TEC	TEH			88	HOT	600UL
		0.43	136	P 2	TWD	18	VSM	-0.87	TEC	TEH			88	HOT	600UL
		0.54	85	P 2	TWD	21	VH3	+0.06	TEC	TEH			88	HOT	600UL
		0.77	131	P 2	TWD	27	VH3	+0.83	TEC	TEH			88	HOT	600UL
81	35	0.19	77	P 2	TWD	9	DBC	-1.95	TEC	TEH	NEW		93	HOT	600UL
81	39	0.34	98	P 2	TWD	16	VC3	+0.86	TEC	TEH			94	HOT	600UL
		0.35	92	P 2	TWD	16	VC3	+0.86	TEC	TEH			94	HOT	600UL
81	41	0.50	77	P 2	TWD	19	VH3	+0.06	TEC	TEH			93	HOT	600UL
		0.29	69	P 2	TWD	13	VH3	+0.46	TEC	TEH			93	HOT	600UL
		0.25	142	P 2	TWD	11	VH3	-1.21	TEC	TEH			93	HOT	600UL
		0.29	68	P 2	TWD	11	VH3	+0.46	TEC	TEH			93	HOT	600UL
		0.27	142	P 2	TWD	11	VH3	-1.21	TEC	TEH			93	HOT	600UL
		0.50	77	P 2	TWD	19	VH3	+0.06	TEC	TEH			93	HOT	600UL
81	43	0.31	74	P 2	TWD	13	DBC	+2.02	TEC	TEH			95	HOT	600UL
		0.35	123	P 2	TWD	14	VH3	+0.75	TEC	TEH			95	HOT	600UL
		0.83	121	P 2	TWD	26	VH3	-0.06	TEC	TEH			95	HOT	600UL
		1.07	114	P 2	TWD	30	VH3	-0.92	TEC	TEH			95	HOT	600UL
		0.32	74	P 2	TWD	12	DBC	+2.02	TEC	TEH			95	HOT	600UL
		0.35	125	P 2	TWD	14	VH3	+0.75	TEC	TEH			95	HOT	600UL
		0.84	120	P 2	TWD	26	VH3	-0.06	TEC	TEH			95	HOT	600UL
		1.07	114	P 2	TWD	30	VH3	-0.92	TEC	TEH			95	HOT	600UL
81	57	0.40	47	P 2	TWD	14	07H	+0.93	TEH	TEC			26	COLD	600UL
		0.40	47	P 2	TWD	14	07H	+0.93	TEH	TEC			26	COLD	600UL
81	59	0.88	138	P 2	TWD	26	VC3	-0.77	TEH	TEC			24	COLD	600UL
		0.64	102	P 2	TWD	22	VC3	-0.17	TEH	TEC			24	COLD	600UL
		0.45	77	P 2	TWD	16	DBH	+1.62	TEH	TEC	NEW		24	COLD	600UL
		0.87	136	P 2	TWD	26	VC3	-0.77	TEH	TEC			24	COLD	600UL
		0.67	99	P 2	TWD	22	VC3	-0.17	TEH	TEC			24	COLD	600UL
81	63	0.31	72	P 2	TWD	12	VSM	-0.86	TEH	TEC			24	COLD	600UL
		0.31	72	P 2	TWD	12	VSM	-0.86	TEH	TEC			24	COLD	600UL
81	65	0.73	140	P 2	TWD	23	VSM	+0.86	TEH	TEC			24	COLD	600UL

MAI, MCI, MMI, MVI, SAI, SCI, SVI, 0-100%TWD

QUERY: rpc_icodes_and_0-100%twd.qry

ROW	LINE	VOLTS	DEG	CHN	IND	%TW	LOCATION		EXT	EXT	UTIL 1	UTIL 2	CAL #	LEG	PROBE
		0.73	140	P 2	TWD	23	VSM	+0.86	TEH	TEC			24	COLD	600UL
81	69	0.24	117	P 2	TWD	9	DBH	+1.80	TEH	TEC			24	COLD	600UL
		0.31	40	P 2	TWD	12	VSM	-0.64	TEH	TEC			24	COLD	600UL
		0.23	136	P 2	TWD	9	VC3	-1.03	TEH	TEC			24	COLD	600UL
		0.55	67	P 2	TWD	19	VC3	+0.88	TEH	TEC			24	COLD	600UL
		0.29	57	P 2	TWD	11	VSM	-0.64	TEH	TEC			24	COLD	600UL
		0.55	67	P 2	TWD	19	VC3	+0.88	TEH	TEC			24	COLD	600UL
		0.24	111	P 2	TWD	10	DBH	+1.80	TEH	TEC			24	COLD	600UL
		0.23	136	P 2	TWD	10	VC3	-1.03	TEH	TEC			24	COLD	600UL
81	81	0.31	158	P 2	TWD	13	VH3	-0.75	TEH	TEC			23	COLD	600UL
		0.47	148	P 2	TWD	19	VH3	+0.72	TEH	TEC			23	COLD	600UL
		0.35	126	P 2	TWD	15	VSM	+0.85	TEH	TEC			23	COLD	600UL
		0.54	126	P 2	TWD	21	VC3	-0.87	TEH	TEC			23	COLD	600UL
		0.51	69	P 2	TWD	20	VC3	+0.83	TEH	TEC			23	COLD	600UL
		0.61	71	P 2	TWD	23	VC3	-0.04	TEH	TEC			23	COLD	600UL
		0.47	148	P 2	TWD	19	VH3	+0.72	TEH	TEC			23	COLD	600UL
		0.51	71	P 2	TWD	20	VC3	+0.83	TEH	TEC			23	COLD	600UL
		0.34	129	P 2	TWD	15	VSM	+0.85	TEH	TEC			23	COLD	600UL
		0.54	128	P 2	TWD	21	VC3	-0.87	TEH	TEC			23	COLD	600UL
		0.31	158	P 2	TWD	13	VH3	-0.75	TEH	TEC			23	COLD	600UL
		0.34	65	P 2	TWD	15	VC3	-0.04	TEH	TEC			23	COLD	600UL
81	111	0.92	140	P 2	TWD	27	VC3	-0.87	TEH	TEC			48	COLD	600UL
		0.57	126	P 2	TWD	20	VC3	+0.72	TEH	TEC			48	COLD	600UL
		0.34	157	P 2	TWD	13	VH3	+0.81	TEH	TEC			48	COLD	600UL
		0.34	157	P 2	TWD	13	VH3	+0.81	TEH	TEC			48	COLD	600UL
		0.92	140	P 2	TWD	27	VC3	-0.87	TEH	TEC			48	COLD	600UL
		0.57	126	P 2	TWD	20	VC3	+0.72	TEH	TEC			48	COLD	600UL
81	113	0.64	96	P 2	TWD	21	08H	-0.38	TEH	TEC			48	COLD	600UL
		0.81	107	P 2	TWD	25	VSM	-0.56	TEH	TEC			48	COLD	600UL
		0.28	139	P 2	TWD	11	VC3	+0.64	TEH	TEC			48	COLD	600UL
		0.64	96	P 2	TWD	21	08H	-0.38	TEH	TEC			48	COLD	600UL
		0.81	107	P 2	TWD	25	VSM	-0.56	TEH	TEC			48	COLD	600UL
		0.28	139	P 2	TWD	11	VC3	+0.64	TEH	TEC			48	COLD	600UL
81	121	0.77	119	P 2	TWD	24	VH3	-0.85	TEH	TEC			46	COLD	600UL
		0.53	161	P 2	TWD	19	VH3	+0.78	TEH	TEC			46	COLD	600UL
		0.77	119	P 2	TWD	24	VH3	-0.85	TEH	TEC			46	COLD	600UL
		0.53	161	P 2	TWD	19	VH3	+0.78	TEH	TEC			46	COLD	600UL
81	129	0.87	124	P 2	TWD	24	VC3	+0.83	TEH	TEC			44	COLD	600UL
		0.39	81	P 2	TWD	13	VH3	+0.99	TEH	TEC			44	COLD	600UL
		0.88	124	P 2	TWD	25	VC3	+0.83	TEH	TEC			44	COLD	600UL
		0.39	84	P 2	TWD	13	VH3	+0.99	TEH	TEC			44	COLD	600UL
81	141	0.45	162	P 2	TWD	16	VH3	-0.69	TEH	TEC			35	COLD	600UL
		0.44	145	P 2	TWD	16	VH3	+0.94	TEH	TEC			35	COLD	600UL
		0.43	141	P 2	TWD	16	VH3	+0.94	TEH	TEC			35	COLD	600UL
		0.45	162	P 2	TWD	16	VH3	-0.69	TEH	TEC			35	COLD	600UL
82	20	0.20	120	P 2	TWD	10	DBC	+2.04	TEC	TEH	NEW		85	HOT	600UL
82	22	0.23	122	P 2	TWD	11	DBC	+1.55	TEC	TEH			85	HOT	600UL
		0.23	124	P 2	TWD	11	DBC	+1.55	TEC	TEH			85	HOT	600UL
82	28	0.27	36	P 2	TWD	13	DBH	-2.01	TEC	TEH	NEW		89	HOT	600UL
82	62	0.42	35	P 2	TWD	16	VH3	+0.79	TEH	TEC			24	COLD	600UL
		0.43	34	P 2	TWD	16	VH3	+0.79	TEH	TEC			24	COLD	600UL
82	68	0.33	138	P 2	TWD	13	VSM	-0.39	TEH	TEC			25	COLD	600UL
		0.41	145	P 2	TWD	16	VH3	-0.71	TEH	TEC			25	COLD	600UL
		0.40	145	P 2	TWD	16	VH3	-0.71	TEH	TEC			25	COLD	600UL
		0.33	138	P 2	TWD	13	VSM	-0.39	TEH	TEC			25	COLD	600UL
82	74	0.58	31	P 2	TWD	21	DBH	+2.01	TEH	TEC	NEW		22	COLD	600UL
82	100	0.41	35	P 2	TWD	17	VH3	+0.73	TEC	TEH			90	HOT	600UL
		0.43	97	P 2	TWD	18	VH3	-0.69	TEC	TEH			90	HOT	600UL
		0.41	35	P 2	TWD	17	VH3	+0.73	TEC	TEH			90	HOT	600UL
		0.43	97	P 2	TWD	17	VH3	-0.69	TEC	TEH			90	HOT	600UL

MAI, MCI, MMI, MVI, SAI, SCI, SVI, 0-100%TWD

QUERY: rpc_icodes_and_0-100%twd.qry

ROW	LINE	VOLTS	DEG	CHN	IND	%TW	LOCATION		EXT	EXT	UTIL 1	UTIL 2	CAL #	LEG	PROBE
82	110	0.37	59	P 2	TWD	16	VH3	+0.88	TEH	TEC	NEW		49	COLD	600UL
82	130	0.87	137	P 2	TWD	25	VH3	-0.86	TEH	TEC			35	COLD	600UL
		0.38	131	P 2	TWD	14	VC3	-0.82	TEH	TEC			35	COLD	600UL
		0.87	137	P 2	TWD	25	VH3	-0.86	TEH	TEC			35	COLD	600UL
		0.38	131	P 2	TWD	14	VC3	-0.82	TEH	TEC			35	COLD	600UL
82	132	0.32	140	P 2	TWD	13	VH3	-0.80	TEH	TEC			34	COLD	600UL
		0.48	123	P 2	TWD	18	VH3	+0.82	TEH	TEC			34	COLD	600UL
		0.32	140	P 2	TWD	13	VH3	-0.80	TEH	TEC			34	COLD	600UL
		0.48	123	P 2	TWD	18	VH3	+0.82	TEH	TEC			34	COLD	600UL
82	152	0.41	149	P 2	TWD	15	08C	-0.21	TEH	TEC			35	COLD	600UL
		0.09	23	P 2	TWD	4	08C	+0.08	TEH	TEC			35	COLD	600UL
		0.41	148	P 2	TWD	15	08C	-0.21	TEH	TEC			35	COLD	600UL
		0.10	22	P 2	TWD	4	08C	+0.08	TEH	TEC			35	COLD	600UL
83	101	0.23	111	P 2	TWD	10	07H	-0.61	TEC	TEH			90	HOT	600UL
		0.23	111	P 2	TWD	10	07H	-0.61	TEC	TEH			90	HOT	600UL
83	117	0.37	131	P 2	TWD	14	05C	+0.48	TEH	TEC			62	COLD	600UL
		0.48	49	P 2	TWD	17	01H	+0.93	TEH	TEC			62	COLD	600UL
83	121	0.35	108	P 2	TWD	14	01H	+0.86	TEH	TEC			62	COLD	600UL
83	139	0.26	157	P 2	TWD	11	VH2	+0.92	TEH	TEC			34	COLD	600UL
		0.26	157	P 2	TWD	11	VH2	+0.92	TEH	TEC			34	COLD	600UL
83	153	0.36	104	P 2	TWD	13	VH2	+0.90	TEH	TEC			34	COLD	600UL
		0.36	104	P 2	TWD	13	VH2	+0.90	TEH	TEC			34	COLD	600UL
84	38	0.38	142	P 2	TWD	16	VH2	+0.72	TEC	TEH			93	HOT	600UL
		0.38	142	P 2	TWD	15	VH2	+0.72	TEC	TEH			93	HOT	600UL
84	58	0.32	151	P 2	TWD	11	09H	-1.24	TEH	TEC			26	COLD	600UL
		0.73	44	P 2	TWD	22	09H	+1.75	TEH	TEC	LOCOK		26	COLD	600UL
		0.32	151	P 2	TWD	11	09H	-1.24	TEH	TEC			26	COLD	600UL
		0.73	44	P 2	TWD	22	09H	+1.75	TEH	TEC			26	COLD	600UL
84	68	0.49	161	P 2	TWD	18	09H	-1.50	TEH	TEC			24	COLD	600UL
		0.48	159	P 2	TWD	18	09H	-1.50	TEH	TEC	LOCOK		24	COLD	600UL
84	70	0.28	109	P 2	TWD	11	09H	-1.35	TEH	TEC			24	COLD	600UL
		0.28	123	P 2	TWD	11	09H	-1.35	TEH	TEC	LOCOK		24	COLD	600UL
84	88	0.84	144	P 2	TWD	27	DBH	+1.90	TEH	TEC			22	COLD	600UL
		0.65	113	P 2	TWD	23	DBH	-1.75	TEH	TEC			22	COLD	600UL
		0.83	134	P 2	TWD	27	DBH	+1.90	TEH	TEC			22	COLD	600UL
		0.68	113	P 2	TWD	23	DBH	-1.75	TEH	TEC			22	COLD	600UL
84	94	0.28	130	P 2	TWD	11	VH2	+0.88	TEC	TEH	NEW		87	HOT	600UL
84	98	0.26	122	P 2	TWD	12	09H	-1.14	TEC	TEH			90	HOT	600UL
		0.26	122	P 2	TWD	11	09H	-1.14	TEC	TEH			90	HOT	600UL
84	100	0.66	129	P 2	TWD	24	09H	-1.41	TEC	TEH			90	HOT	600UL
		0.38	44	P 2	TWD	16	09H	+1.45	TEC	TEH			90	HOT	600UL
		0.36	59	P 2	TWD	16	09H	+1.45	TEC	TEH	LOCOK		90	HOT	600UL
		0.66	132	P 2	TWD	24	09H	-1.41	TEC	TEH	LOCOK		90	HOT	600UL
84	102	0.54	131	P 2	TWD	15	07H	-0.87	TEH	TEC			53	COLD	600UL
		0.35	48	P 2	TWD	10	09H	-1.44	TEH	TEC			53	COLD	600UL
		0.39	146	P 2	TWD	11	09H	+1.42	TEH	TEC			53	COLD	600UL
		0.54	131	P 2	TWD	15	07H	-0.87	TEH	TEC			53	COLD	600UL
		0.35	41	P 2	TWD	11	09H	-1.44	TEH	TEC	LOCOK		53	COLD	600UL
		0.39	146	P 2	TWD	11	09H	+1.42	TEH	TEC	LOCOK		53	COLD	600UL
84	106	0.56	137	P 2	TWD	16	09H	-1.42	TEH	TEC			53	COLD	600UL
		0.80	134	P 2	TWD	21	09H	+1.54	TEH	TEC			53	COLD	600UL
		0.56	138	P 2	TWD	16	09H	-1.42	TEH	TEC	LOCOK		53	COLD	600UL
		0.81	133	P 2	TWD	21	09H	+1.54	TEH	TEC	LOCOK		53	COLD	600UL
84	108	0.51	152	P 2	TWD	14	09H	-1.68	TEH	TEC			53	COLD	600UL
		0.45	132	P 2	TWD	13	09H	+1.50	TEH	TEC			53	COLD	600UL
		0.47	134	P 2	TWD	14	09H	+1.50	TEH	TEC	LOCOK		53	COLD	600UL

MAI, MCI, MMI, MVI, SAI, SCI, SVI, 0-100%TWD

QUERY: rpc_icodes_and_0-100%twd.qry

ROW	LINE	VOLTS	DEG	CHN	IND	%TW	LOCATION		EXT	EXT	UTIL 1	UTIL 2	CAL #	LEG	PROBE
		0.51	150	P 2	TWD	15	09H	-1.68	TEH	TEC	LOCOK		53	COLD	600UL
84	110	0.46	49	P 2	TWD	17	08H	+0.02	TEH	TEC			48	COLD	600UL
		0.77	144	P 2	TWD	24	09H	-1.35	TEH	TEC	LOCOK		48	COLD	600UL
		0.85	102	P 2	TWD	26	09H	+1.49	TEH	TEC	LOCOK		48	COLD	600UL
		0.41	69	P 2	TWD	15	08H	+0.02	TEH	TEC			48	COLD	600UL
		0.77	145	P 2	TWD	24	09H	-1.35	TEH	TEC	LOCOK		48	COLD	600UL
		0.85	102	P 2	TWD	26	09H	+1.49	TEH	TEC	LOCOK		48	COLD	600UL
84	114	0.54	146	P 2	TWD	19	09H	-1.29	TEH	TEC	LOCOK		48	COLD	600UL
		0.47	125	P 2	TWD	17	09H	+1.84	TEH	TEC	LOCOK		48	COLD	600UL
		0.47	125	P 2	TWD	17	09H	+1.84	TEH	TEC	LOCOK		48	COLD	600UL
		0.54	146	P 2	TWD	19	09H	-1.29	TEH	TEC	LOCOK		48	COLD	600UL
84	116	0.49	122	P 2	TWD	18	09H	-1.36	TEH	TEC	LOCOK		48	COLD	600UL
		0.37	113	P 2	TWD	14	09H	+1.66	TEH	TEC	LOCOK		48	COLD	600UL
		0.49	122	P 2	TWD	18	09H	-1.36	TEH	TEC	LOCOK		48	COLD	600UL
		0.37	125	P 2	TWD	14	09H	+1.66	TEH	TEC	LOCOK		48	COLD	600UL
84	118	0.45	139	P 2	TWD	16	09H	-1.20	TEH	TEC			46	COLD	600UL
		0.45	139	P 2	TWD	16	09H	-1.20	TEH	TEC			46	COLD	600UL
84	122	0.44	132	P 2	TWD	16	09H	-1.55	TEH	TEC	NEW	LOCOK	62	COLD	600UL
84	130	0.38	88	P 2	TWD	15	VH2	+0.89	TEH	TEC			34	COLD	600UL
		0.38	88	P 2	TWD	15	VH2	+0.89	TEH	TEC			34	COLD	600UL
85	57	1.03	120	P 2	TWD	28	08H	-0.79	TEH	TEC			26	COLD	600UL
		1.03	120	P 2	TWD	28	08H	-0.79	TEH	TEC			26	COLD	600UL
85	61	0.58	121	P 2	TWD	20	08H	+0.52	TEH	TEC			24	COLD	600UL
		0.58	121	P 2	TWD	20	08H	+0.52	TEH	TEC			24	COLD	600UL
85	83	0.25	141	P 2	TWD	11	06H	+0.85	TEH	TEC			23	COLD	600UL
85	97	0.27	71	P 2	TWD	12	09H	+1.24	TEC	TEH			87	HOT	600UL
		0.44	102	P 2	TWD	17	09H	-0.95	TEC	TEH			87	HOT	600UL
		0.24	68	P 2	TWD	10	09H	+1.24	TEC	TEH			87	HOT	600UL
		0.44	102	P 2	TWD	17	09H	-0.95	TEC	TEH			87	HOT	600UL
85	117	0.61	115	P 2	TWD	21	09H	-1.48	TEH	TEC			46	COLD	600UL
		0.61	115	P 2	TWD	21	09H	-1.48	TEH	TEC	LOCOK		46	COLD	600UL
85	157	0.32	30	P 2	TWD	12	DBH	+1.73	TEH	TEC			36	COLD	600UL
		0.36	28	P 2	TWD	13	DBH	+1.73	TEH	TEC			36	COLD	600UL
86	48	0.26	84	P 2	TWD	10	VH2	-0.88	TEH	TEC			29	COLD	600UL
		0.26	88	P 2	TWD	10	VH2	-0.88	TEH	TEC			29	COLD	600UL
86	58	0.45	57	P 2	TWD	19	VH2	+0.62	TEH	TEC			27	COLD	600UL
		0.45	57	P 2	TWD	19	VH2	+0.62	TEH	TEC			27	COLD	600UL
86	60	0.32	142	P 2	TWD	12	08H	-0.88	TEH	TEC			24	COLD	600UL
		0.41	159	P 2	TWD	15	09H	-0.85	TEH	TEC			24	COLD	600UL
		0.29	149	P 2	TWD	11	08H	-0.88	TEH	TEC			24	COLD	600UL
		0.40	159	P 2	TWD	15	09H	-0.85	TEH	TEC			24	COLD	600UL
86	98	0.26	35	P 2	TWD	12	06H	+0.78	TEC	TEH			90	HOT	600UL
86	102	0.30	164	P 2	TWD	14	09H	+0.58	TEH	TEC			54	COLD	600UL
		0.30	164	P 2	TWD	14	09H	+0.58	TEH	TEC			54	COLD	600UL
86	108	0.49	47	P 2	TWD	20	VH2	-0.72	TEH	TEC			54	COLD	600UL
		0.49	47	P 2	TWD	20	VH2	-0.72	TEH	TEC			54	COLD	600UL
86	112	0.36	47	P 2	TWD	16	08H	-0.14	TEH	TEC	NEW		49	COLD	600UL
86	114	0.34	70	P 2	TWD	15	VH2	-0.66	TEH	TEC	NEW		49	COLD	600UL
86	116	0.39	112	P 2	TWD	17	VH2	-0.62	TEH	TEC	NEW		49	COLD	600UL
86	118	0.44	130	P 2	TWD	16	VH2	-0.58	TEH	TEC			62	COLD	600UL
		0.44	130	P 2	TWD	16	VH2	-0.58	TEH	TEC			62	COLD	600UL
87	61	0.55	39	P 2	TWD	20	08H	+0.75	TEH	TEC			25	COLD	600UL

MAI, MCI, MMI, MVI, SAI, SCI, SVI, 0-100%TWD

QUERY: rpc_icodes_and_0-100%twd.qry

ROW	LINE	VOLTS	DEG	CHN	IND	%TW	LOCATION		EXT	EXT	UTIL 1	UTIL 2	CAL #	LEG	PROBE
		0.55	39	P 2	TWD	20	08H	+0.75	TEH	TEC			25	COLD	600UL
87	99	0.30	42	P 2	TWD	13	09H	+0.97	TEC	TEH			90	HOT	600UL
		0.24	80	P 2	TWD	11	08H	-0.45	TEC	TEH			90	HOT	600UL
		0.34	151	P 2	TWD	15	07H	+0.91	TEC	TEH			90	HOT	600UL
		0.36	156	P 2	TWD	15	07H	+0.91	TEC	TEH			90	HOT	600UL
		0.34	122	P 2	TWD	15	08H	-0.45	TEC	TEH			90	HOT	600UL
		0.28	55	P 2	TWD	13	09H	+0.97	TEC	TEH			90	HOT	600UL
87	101	0.35	132	P 2	TWD	15	07H	+0.23	TEC	TEH			90	HOT	600UL
		0.35	133	P 2	TWD	15	07H	+0.23	TEC	TEH			90	HOT	600UL
87	111	0.21	84	P 2	TWD	10	08H	-0.52	TEH	TEC			49	COLD	600UL
		0.22	108	P 2	TWD	10	08H	-0.52	TEH	TEC			49	COLD	600UL
87	117	0.40	117	P 2	TWD	15	09H	+0.32	TEH	TEC			62	COLD	600UL
		0.40	117	P 2	TWD	15	09H	+0.32	TEH	TEC			62	COLD	600UL
88	36	0.39	150	P 2	TWD	16	VH2	-1.14	TEC	TEH			93	HOT	600UL
		0.38	148	P 2	TWD	16	VH2	-1.14	TEC	TEH			93	HOT	600UL
88	48	0.37	40	P 2	TWD	14	VH2	-0.68	TEH	TEC			29	COLD	600UL
		0.36	43	P 2	TWD	14	VH2	-0.68	TEH	TEC			29	COLD	600UL
88	68	0.43	90	P 2	TWD	16	08H	-1.01	TEH	TEC			24	COLD	600UL
		0.43	90	P 2	TWD	16	08H	-1.01	TEH	TEC			24	COLD	600UL
88	124	0.50	107	P 2	TWD	16	VH2	-0.80	TEH	TEC			44	COLD	600UL
		0.50	107	P 2	TWD	16	VH2	-0.80	TEH	TEC			44	COLD	600UL
88	126	0.46	105	P 2	TWD	15	VH2	-0.84	TEH	TEC			44	COLD	600UL
		0.51	81	P 2	TWD	16	VH2	-0.84	TEH	TEC			44	COLD	600UL
89	29	0.37	142	P 2	TWD	16	VH2	+0.93	TEC	TEH			88	HOT	600UL
		0.57	122	P 2	TWD	22	VH2	-0.02	TEC	TEH			88	HOT	600UL
		0.37	129	P 2	TWD	16	VH2	-1.02	TEC	TEH			88	HOT	600UL
		0.38	143	P 2	TWD	16	VH2	+0.93	TEC	TEH			88	HOT	600UL
		0.57	120	P 2	TWD	22	VH2	-0.02	TEC	TEH			88	HOT	600UL
		0.38	132	P 2	TWD	16	VH2	-1.02	TEC	TEH			88	HOT	600UL
89	57	0.45	39	P 2	TWD	15	09H	+0.51	TEH	TEC			26	COLD	600UL
		0.45	39	P 2	TWD	15	09H	+0.51	TEH	TEC			26	COLD	600UL
89	59	0.43	43	P 2	TWD	16	09H	+0.81	TEH	TEC			24	COLD	600UL
		0.29	23	P 2	TWD	11	01H	+0.78	TEH	TEC			24	COLD	600UL
		0.43	43	P 2	TWD	16	09H	+0.81	TEH	TEC			24	COLD	600UL
89	61	0.64	113	P 2	TWD	22	09H	+0.69	TEH	TEC			24	COLD	600UL
		0.64	113	P 2	TWD	22	09H	+0.69	TEH	TEC			24	COLD	600UL
89	79	0.57	125	P 2	TWD	21	09H	-0.15	TEH	TEC			22	COLD	600UL
		0.59	136	P 2	TWD	21	09H	-0.15	TEH	TEC			22	COLD	600UL
89	101	0.44	144	P 2	TWD	18	07H	+1.03	TEC	TEH			90	HOT	600UL
		0.49	147	P 2	TWD	19	07H	+1.03	TEC	TEH			90	HOT	600UL
89	113	0.47	129	P 2	TWD	17	09H	+0.52	TEH	TEC			48	COLD	600UL
		0.47	129	P 2	TWD	17	09H	+0.52	TEH	TEC			48	COLD	600UL
89	151	0.40	123	P 2	TWD	15	VC3	-0.78	TEH	TEC			35	COLD	600UL
		0.40	123	P 2	TWD	15	VC3	-0.78	TEH	TEC			35	COLD	600UL
90	52	0.30	149	P 2	TWD	14	VH2	-0.58	TEH	TEC			4	COLD	600UL
		0.30	149	P 2	TWD	14	VH2	-0.58	TEH	TEC			4	COLD	600UL
90	62	0.47	72	P 2	TWD	17	VH2	-0.70	TEH	TEC			5	COLD	600UL
		0.47	72	P 2	TWD	17	VH2	-0.70	TEH	TEC			5	COLD	600UL
90	72	0.32	95	P 2	TWD	15	08H	-0.30	TEH	TEC			6	COLD	600UL
		0.32	95	P 2	TWD	15	08H	-0.30	TEH	TEC			6	COLD	600UL
90	78	0.33	76	P 2	TWD	14	09H	-0.09	TEH	TEC			8	COLD	600UL
		0.24	53	P 2	TWD	11	09H	+0.67	TEH	TEC			8	COLD	600UL
		0.33	76	P 2	TWD	14	09H	-0.09	TEH	TEC			8	COLD	600UL
		0.24	53	P 2	TWD	12	09H	+0.67	TEH	TEC			8	COLD	600UL

MAI, MCI, MMI, MVI, SAI, SCI, SVI, 0-100%TWD

QUERY: rpc_icodes_and_0-100%twd.qry

ROW	LINE	VOLTS	DEG	CHN	IND	%TW	LOCATION	EXT	EXT	UTIL 1	UTIL 2	CAL #	LEG	PROBE
90	102	0.23	148	P 2	TWD 10	09H	+0.86	TEH	TEC			15	COLD	600UL
		0.58	127	P 2	TWD 19	08H	+0.86	TEH	TEC			15	COLD	600UL
		0.58	127	P 2	TWD 19	08H	+0.86	TEH	TEC			15	COLD	600UL
		0.22	145	P 2	TWD 8	09H	+0.86	TEH	TEC			15	COLD	600UL
91	21	0.44	83	P 2	TWD 18	VH2	-1.08	TEC	TEH			73	HOT	600UL
		0.44	83	P 2	TWD 18	VH2	-1.08	TEC	TEH			73	HOT	600UL
91	25	0.25	137	P 2	TWD 11	VH2	+0.80	TEC	TEH			73	HOT	600UL
		0.26	137	P 2	TWD 12	VH2	+0.80	TEC	TEH			73	HOT	600UL
91	37	0.32	102	P 2	TWD 14	VH2	+0.84	TSH	TEC	NEW		2	COLD	600UL
91	49	0.30	148	P 2	TWD 12	VH2	-0.60	TEH	TEC			3	COLD	600UL
		0.30	148	P 2	TWD 12	VH2	-0.60	TEH	TEC			3	COLD	600UL
91	69	0.45	107	P 2	TWD 19	08H	+0.92	TEH	TEC			6	COLD	600UL
		0.45	132	P 2	TWD 19	09H	-0.06	TEH	TEC			6	COLD	600UL
		0.42	106	P 2	TWD 19	08H	+0.92	TEH	TEC			6	COLD	600UL
		0.45	132	P 2	TWD 19	09H	-0.06	TEH	TEC			6	COLD	600UL
91	73	0.75	140	P 2	TWD 26	09H	-0.32	TEH	TEC			8	COLD	600UL
		0.32	126	P 2	TWD 14	08H	+0.82	TEH	TEC			8	COLD	600UL
		0.32	126	P 2	TWD 14	08H	+0.82	TEH	TEC			8	COLD	600UL
		0.75	140	P 2	TWD 26	09H	-0.32	TEH	TEC			8	COLD	600UL
91	79	0.37	128	P 2	TWD 16	09H	+0.48	TEH	TEC			8	COLD	600UL
		0.27	92	P 2	TWD 12	07H	+0.32	TEH	TEC			8	COLD	600UL
		0.40	75	P 2	TWD 17	09H	+0.48	TEH	TEC			8	COLD	600UL
		0.27	92	P 2	TWD 12	07H	+0.32	TEH	TEC	LAR		8	COLD	600UL
91	81	0.27	94	P 2	TWD 12	09H	-0.04	TEH	TEC			8	COLD	600UL
		0.27	93	P 2	TWD 12	09H	-0.04	TEH	TEC			8	COLD	600UL
91	99	0.33	56	P 2	TWD 13	08H	+0.96	TEH	TEC			13	COLD	600UL
		0.31	24	P 2	TWD 12	08H	-0.92	TEH	TEC			13	COLD	600UL
		0.22	146	P 2	TWD 9	09H	+0.00	TEH	TEC			13	COLD	600UL
		0.32	30	P 2	TWD 13	08H	-0.92	TEH	TEC			13	COLD	600UL
		0.35	63	P 2	TWD 15	08H	+0.96	TEH	TEC			13	COLD	600UL
		0.19	150	P 2	TWD 8	09H	+0.00	TEH	TEC			13	COLD	600UL
91	103	0.43	109	P 2	TWD 14	08H	+0.82	TEH	TEC			15	COLD	600UL
		0.43	109	P 2	TWD 14	08H	+0.82	TEH	TEC			15	COLD	600UL
91	105	0.43	76	P 2	TWD 14	09H	-0.15	TEH	TEC			15	COLD	600UL
		0.43	75	P 2	TWD 16	09H	-0.15	TEH	TEC			15	COLD	600UL
91	111	0.57	81	P 2	TWD 18	09H	-0.21	TEH	TEC			15	COLD	600UL
		0.57	75	P 2	TWD 18	09H	-0.21	TEH	TEC			15	COLD	600UL
91	113	0.30	116	P 2	TWD 11	09H	-0.34	TEH	TEC			15	COLD	600UL
		0.62	76	P 2	TWD 19	09H	+0.43	TEH	TEC			15	COLD	600UL
		0.30	116	P 2	TWD 11	09H	-0.34	TEH	TEC			15	COLD	600UL
		0.62	76	P 2	TWD 19	09H	+0.43	TEH	TEC			15	COLD	600UL
91	115	0.36	128	P 2	TWD 12	09H	+0.30	TEH	TEC			15	COLD	600UL
		0.35	126	P 2	TWD 14	09H	+0.30	TEH	TEC			15	COLD	600UL
92	66	0.35	142	P 2	TWD 13	09H	-0.13	TEH	TEC			5	COLD	600UL
		0.33	22	P 2	TWD 13	09H	+1.03	TEH	TEC			5	COLD	600UL
		0.33	22	P 2	TWD 13	09H	+1.03	TEH	TEC			5	COLD	600UL
		0.35	141	P 2	TWD 13	09H	-0.13	TEH	TEC			5	COLD	600UL
92	68	0.88	125	P 2	TWD 27	09H	-0.19	TEH	TEC			5	COLD	600UL
		0.88	126	P 2	TWD 27	09H	-0.19	TEH	TEC			5	COLD	600UL
92	72	0.26	36	P 2	TWD 10	09H	+0.62	TEH	TEC			5	COLD	600UL
		0.52	134	P 2	TWD 19	09H	-0.06	TEH	TEC			5	COLD	600UL
		0.36	117	P 2	TWD 14	05H	+0.81	TEH	TEC			5	COLD	600UL
		0.26	36	P 2	TWD 10	09H	+0.62	TEH	TEC			5	COLD	600UL
		0.52	134	P 2	TWD 19	09H	-0.06	TEH	TEC			5	COLD	600UL
92	74	0.55	113	P 2	TWD 20	07H	+0.86	TEH	TEC			7	COLD	600UL
		0.32	30	P 2	TWD 13	09H	+0 99	TEH	TEC			7	COLD	600UL

MAI, MCI, MMI, MVI, SAI, SCI, SVI, 0-100%TWD

QUERY: rpc_icodes_and_0-100%twd.qry

ROW	LINE	VOLTS	DEG	CHN	IND	%TW	LOCATION	EXT	EXT	UTIL 1	UTIL 2	CAL #	LEG	PROBE
		0.56	114	P 2	TWD	20	07H +0.86	TEH	TEC			7	COLD	600UL
		0.39	28	P 2	TWD	16	09H +0.99	TEH	TEC			7	COLD	600UL
92	76	0.35	73	P 2	TWD	14	09H -0.24	TEH	TEC			7	COLD	600UL
		0.39	80	P 2	TWD	16	09H -0.24	TEH	TEC			7	COLD	600UL
92	98	0.30	64	P 2	TWD	12	08H -0.56	TEH	TEC			13	COLD	600UL
		0.30	61	P 2	TWD	13	08H -0.56	TEH	TEC			13	COLD	600UL
92	102	0.81	105	P 2	TWD	25	09H +0.88	TEH	TEC			15	COLD	600UL
		0.80	107	P 2	TWD	23	09H +0.88	TEH	TEC			15	COLD	600UL
92	104	0.28	113	P 2	TWD	13	09H -0.94	TEH	TEC			16	COLD	600UL
		0.36	129	P 2	TWD	16	09H +0.06	TEH	TEC			16	COLD	600UL
		0.29	102	P 2	TWD	14	09H -0.94	TEH	TEC			16	COLD	600UL
		0.37	126	P 2	TWD	17	09H +0.06	TEH	TEC			16	COLD	600UL
92	112	0.77	107	P 2	TWD	23	09H +0.30	TEH	TEC			15	COLD	600UL
		0.34	89	P 2	TWD	12	09H +0.83	TEH	TEC			15	COLD	600UL
		0.77	106	P 2	TWD	24	09H +0.30	TEH	TEC			15	COLD	600UL
		0.34	77	P 2	TWD	12	09H +0.83	TEH	TEC			15	COLD	600UL
93	35	0.25	24	P 2	TWD	11	VH2 +0.72	TEC	TEH			76	HOT	600UL
		0.25	24	P 2	TWD	11	VH2 +0.72	TEC	TEH			76	HOT	600UL
93	61	0.82	118	P 2	TWD	26	09H +0.77	TEH	TEC			5	COLD	600UL
		0.83	117	P 2	TWD	26	09H +0.77	TEH	TEC			5	COLD	600UL
93	63	0.30	57	P 2	TWD	12	09H +1.03	TEH	TEC			5	COLD	600UL
		0.31	56	P 2	TWD	12	09H +1.03	TEH	TEC			5	COLD	600UL
93	69	0.37	145	P 2	TWD	14	09H +0.77	TEH	TEC			5	COLD	600UL
		0.37	145	P 2	TWD	14	09H +0.77	TEH	TEC			5	COLD	600UL
93	73	0.33	162	P 2	TWD	13	09H +0.84	TEH	TEC			7	COLD	600UL
		0.33	162	P 2	TWD	13	09H +0.84	TEH	TEC			7	COLD	600UL
93	75	0.85	74	P 2	TWD	27	09H -0.19	TEH	TEC			7	COLD	600UL
		0.85	73	P 2	TWD	27	09H -0.19	TEH	TEC			7	COLD	600UL
93	77	0.37	30	P 2	TWD	15	09H -0.17	TEH	TEC	NEW		7	COLD	600UL
93	79	0.31	61	P 2	TWD	12	09H -0.15	TEH	TEC			7	COLD	600UL
		0.31	61	P 2	TWD	13	09H -0.15	TEH	TEC			7	COLD	600UL
93	97	0.53	125	P 2	TWD	21	09H -0.19	TEH	TEC			14	COLD	600UL
		0.20	127	P 2	TWD	10	09H +0.86	TEH	TEC			14	COLD	600UL
		0.53	125	P 2	TWD	21	09H -0.19	TEH	TEC			14	COLD	600UL
		0.20	127	P 2	TWD	10	09H +0.86	TEH	TEC			14	COLD	600UL
93	105	0.33	103	P 2	TWD	15	08H -0.47	TEH	TEC			16	COLD	600UL
		0.33	102	P 2	TWD	16	08H -0.47	TEH	TEC			16	COLD	600UL
93	111	0.43	120	P 2	TWD	19	08H +0.28	TEH	TEC			16	COLD	600UL
		0.43	116	P 2	TWD	19	08H +0.28	TEH	TEC			16	COLD	600UL
93	113	0.28	62	P 2	TWD	14	09H +0.69	TEH	TEC			16	COLD	600UL
		0.30	49	P 2	TWD	15	09H +0.69	TEH	TEC			16	COLD	600UL
93	149	0.26	50	P 2	TWD	13	DBC -1.70	TEH	TEC	NEW		21	COLD	600UL
94	28	0.49	92	P 2	TWD	19	VSM -0.80	TEC	TEH			73	HOT	600UL
		0.38	60	P 2	TWD	16	VH3 +0.62	TEC	TEH			73	HOT	600UL
		0.49	92	P 2	TWD	19	VSM -0.80	TEC	TEH			73	HOT	600UL
		0.39	66	P 2	TWD	16	VH3 +0.62	TEC	TEH			73	HOT	600UL
94	38	0.24	151	P 2	TWD	11	VH2 +0.78	TEH	TEC			2	COLD	600UL
		0.23	148	P 2	TWD	11	VH2 +0.78	TEH	TEC			2	COLD	600UL
94	40	0.85	129	P 2	TWD	25	VSM +0.87	TEH	TEC			1	COLD	600UL
		0.85	129	P 2	TWD	25	VSM +0.87	TEH	TEC			1	COLD	600UL
94	50	0.34	102	P 2	TWD	14	08H +0.47	TEH	TEC	NEW		3	COLD	600UL
94	62	0.30	124	P 2	TWD	14	09H +0 00	TEH	TEC			6	COLD	600UL

MAI, MCI, MMI, MVI, SAI, SCI, SVI, 0-100%TWD

QUERY: rpc_icodes_and_0-100%twd.qry

ROW	LINE	VOLTS	DEG	CHN	IND	%TW	LOCATION		EXT	EXT	UTIL 1	UTIL 2	CAL #	LEG	PROBE
		0.30	125	P 2	TWD	14	09H	+0.00	TEH	TEC			6	COLD	600UL
94	64	0.21	146	P 2	TWD	10	08H	-0.47	TEH	TEC			6	COLD	600UL
		0.32	69	P 2	TWD	15	09H	+0.28	TEH	TEC			6	COLD	600UL
		0.32	69	P 2	TWD	15	09H	+0.28	TEH	TEC			6	COLD	600UL
		0.22	150	P 2	TWD	11	08H	-0.47	TEH	TEC			6	COLD	600UL
94	66	0.21	129	P 2	TWD	10	09H	+0.69	TEH	TEC			6	COLD	600UL
		0.21	129	P 2	TWD	10	09H	+0.69	TEH	TEC			6	COLD	600UL
94	68	0.33	151	P 2	TWD	15	VH2	+0.80	TEH	TEC			6	COLD	600UL
		0.31	141	P 2	TWD	14	VH2	+0.80	TEH	TEC			6	COLD	600UL
94	72	0.26	144	P 2	TWD	12	07H	+0.39	TEH	TEC			6	COLD	600UL
		0.26	144	P 2	TWD	12	07H	+0.39	TEH	TEC			6	COLD	600UL
94	74	0.33	61	P 2	TWD	14	09H	-0.37	TEH	TEC			8	COLD	600UL
		0.33	62	P 2	TWD	14	09H	-0.37	TEH	TEC			8	COLD	600UL
94	78	0.37	136	P 2	TWD	16	09H	-0.11	TEH	TEC			8	COLD	600UL
		0.40	104	P 2	TWD	17	09H	+0.39	TEH	TEC			8	COLD	600UL
		0.40	104	P 2	TWD	17	09H	+0.39	TEH	TEC			8	COLD	600UL
		0.37	136	P 2	TWD	16	09H	-0.11	TEH	TEC			8	COLD	600UL
94	82	0.52	125	P 2	TWD	21	09H	-0.19	TEH	TEC			8	COLD	600UL
		0.52	125	P 2	TWD	21	09H	-0.19	TEH	TEC			8	COLD	600UL
94	84	0.41	80	P 2	TWD	17	08H	-0.37	TEH	TEC			8	COLD	600UL
		0.41	80	P 2	TWD	17	08H	-0.37	TEH	TEC			8	COLD	600UL
94	88	0.30	78	P 2	TWD	13	09H	-0.81	TEH	TEC			13	COLD	600UL
		0.27	68	P 2	TWD	11	09H	-0.81	TEH	TEC			13	COLD	600UL
94	90	0.14	38	P 2	TWD	7	09H	+0.38	TEH	TEC			14	COLD	600UL
		0.14	38	P 2	TWD	7	09H	+0.38	TEH	TEC			14	COLD	600UL
94	94	0.25	130	P 2	TWD	12	07H	+0.98	TEH	TEC			14	COLD	600UL
		0.25	137	P 2	TWD	12	VH2	+0.92	TEH	TEC			14	COLD	600UL
		0.25	130	P 2	TWD	12	07H	+0.98	TEH	TEC			14	COLD	600UL
		0.25	146	P 2	TWD	12	VH2	+0.92	TEH	TEC			14	COLD	600UL
94	96	0.25	105	P 2	TWD	12	08H	-0.49	TEH	TEC			14	COLD	600UL
		0.23	155	P 2	TWD	11	09H	+0.83	TEH	TEC			14	COLD	600UL
		0.23	155	P 2	TWD	11	09H	+0.83	TEH	TEC			14	COLD	600UL
		0.25	105	P 2	TWD	12	08H	-0.49	TEH	TEC			14	COLD	600UL
94	102	0.35	112	P 2	TWD	16	09H	-0.43	TEH	TEC			16	COLD	600UL
		0.35	112	P 2	TWD	17	09H	-0.43	TEH	TEC			16	COLD	600UL
94	104	0.31	100	P 2	TWD	11	DBH	+1.19	TEH	TEC	NEW		15	COLD	600UL
94	138	0.17	17	P 1	SCI		TSH	-4.97	TSH	TSH	.27	8.82	64	HOT	580PP
94	146	0.27	157	P 2	TWD	13	VH2	-0.90	TEH	TEC			21	COLD	600UL
		0.38	106	P 2	TWD	17	VH2	+0.92	TEH	TEC			21	COLD	600UL
		0.71	112	P 2	TWD	26	VH3	-0.90	TEH	TEC			21	COLD	600UL
		0.27	157	P 2	TWD	13	VH2	-0.90	TEH	TEC			21	COLD	600UL
		0.38	106	P 2	TWD	17	VH2	+0.92	TEH	TEC			21	COLD	600UL
		0.71	112	P 2	TWD	26	VH3	-0.90	TEH	TEC			21	COLD	600UL
94	148	0.40	73	P 2	TWD	18	VC3	+0.85	TEH	TEC			21	COLD	600UL
		0.41	71	P 2	TWD	19	VC3	+0.85	TEH	TEC			21	COLD	600UL
95	25	0.28	73	P 2	TWD	13	VH2	-0.70	TEC	TEH			73	HOT	600UL
		0.27	73	P 2	TWD	12	VH2	-0.70	TEC	TEH			73	HOT	600UL
95	63	0.39	123	P 2	TWD	17	09H	+0.24	TEH	TEC			6	COLD	600UL
		0.39	111	P 2	TWD	17	09H	+0.24	TEH	TEC			6	COLD	600UL
95	65	0.32	96	P 2	TWD	15	08H	+0.33	TEH	TEC			6	COLD	600UL
		0.82	98	P 2	TWD	28	09H	-0.22	TEH	TEC			6	COLD	600UL
		0.18	150	P 2	TWD	9	09H	+0.87	TEH	TEC			6	COLD	600UL
		0.32	96	P 2	TWD	15	08H	+0.33	TEH	TEC			6	COLD	600UL
		0.81	98	P 2	TWD	28	09H	-0.22	TEH	TEC			6	COLD	600UL
		0.18	146	P 2	TWD	9	09H	+0.87	TEH	TEC			6	COLD	600UL

MAI, MCI, MMI, MVI, SAI, SCI, SVI, 0-100%TWD

QUERY: rpc_icodes_and_0-100%twd.qry

ROW	LINE	VOLTS	DEG	CHN	IND	%TW	LOCATION	EXT	EXT	UTIL 1	UTIL 2	CAL #	LEG	PROBE
95	67	0.53	65	P 2	TWD 19	09H	+0.75	TEH	TEC			5	COLD	600UL
		0.41	118	P 2	TWD 15	09H	+0.75	TEH	TEC			5	COLD	600UL
95	69	0.25	87	P 2	TWD 12	08H	+0.34	TEH	TEC			6	COLD	600UL
		0.25	87	P 2	TWD 12	08H	+0.34	TEH	TEC			6	COLD	600UL
95	71	0.26	136	P 2	TWD 10	07H	-0.87	TEH	TEC			5	COLD	600UL
		0.26	136	P 2	TWD 10	07H	-0.87	TEH	TEC			5	COLD	600UL
95	73	0.27	101	P 2	TWD 12	VH3	+0.80	TEH	TEC			8	COLD	600UL
		0.68	82	P 2	TWD 25	09H	+0.60	TEH	TEC			8	COLD	600UL
		0.34	46	P 2	TWD 15	07H	+0.69	TEH	TEC			8	COLD	600UL
		0.22	135	P 2	TWD 10	VSM	+0.91	TEH	TEC			8	COLD	600UL
		0.10	16	P 2	TWD 5	07H	-0.93	TEH	TEC			8	COLD	600UL
		0.10	16	P 2	TWD 5	07H	-0.93	TEH	TEC			8	COLD	600UL
		0.34	46	P 2	TWD 15	07H	+0.69	TEH	TEC			8	COLD	600UL
		0.68	82	P 2	TWD 25	09H	+0.60	TEH	TEC			8	COLD	600UL
		0.25	108	P 2	TWD 11	VH3	+0.80	TEH	TEC			8	COLD	600UL
		0.26	166	P 2	TWD 11	VSM	+0.91	TEH	TEC			8	COLD	600UL
95	77	0.25	129	P 2	TWD 11	08H	+0.50	TEH	TEC			8	COLD	600UL
		0.25	129	P 2	TWD 11	08H	+0.50	TEH	TEC			8	COLD	600UL
95	85	0.37	138	P 2	TWD 15	08H	+0.86	TEH	TEC			7	COLD	600UL
		0.35	60	P 2	TWD 14	09H	+0.90	TEH	TEC			7	COLD	600UL
		0.37	138	P 2	TWD 15	08H	+0.86	TEH	TEC			7	COLD	600UL
		0.35	60	P 2	TWD 14	09H	+0.90	TEH	TEC			7	COLD	600UL
95	89	0.34	111	P 2	TWD 13	09H	+0.60	TEH	TEC			13	COLD	600UL
		0.33	108	P 2	TWD 14	09H	+0.60	TEH	TEC			13	COLD	600UL
95	97	0.28	84	P 2	TWD 12	09H	-0.21	TEH	TEC			13	COLD	600UL
		0.28	84	P 2	TWD 12	09H	-0.21	TEH	TEC			13	COLD	600UL
95	101	0.68	89	P 2	TWD 25	09H	-0.26	TEH	TEC			14	COLD	600UL
		0.20	80	P 2	TWD 9	09H	+0.71	TEH	TEC			14	COLD	600UL
		0.68	89	P 2	TWD 25	09H	-0.26	TEH	TEC			14	COLD	600UL
		0.20	80	P 2	TWD 9	09H	+0.71	TEH	TEC			14	COLD	600UL
95	103	0.48	106	P 2	TWD 16	09H	+0.99	TEH	TEC			15	COLD	600UL
		0.48	106	P 2	TWD 16	09H	+0.99	TEH	TEC			15	COLD	600UL
95	105	0.77	140	P 2	TWD 23	09H	+0.88	TEH	TEC			15	COLD	600UL
		0.29	47	P 2	TWD 10	DBH	+0.68	TEH	TEC	NEW		15	COLD	600UL
		0.77	140	P 2	TWD 23	09H	+0.88	TEH	TEC			15	COLD	600UL
95	109	0.35	97	P 2	TWD 12	09H	+0.94	TEH	TEC			15	COLD	600UL
		0.35	97	P 2	TWD 12	09H	+0 94	TEH	TEC			15	COLD	600UL
95	111	0.46	89	P 2	TWD 15	09H	+1.03	TEH	TEC			15	COLD	600UL
		0.46	89	P 2	TWD 15	09H	+1.03	TEH	TEC			15	COLD	600UL
96	50	0.22	123	P 2	TWD 10	VH2	-0.56	TEH	TEC			4	COLD	600UL
		0.21	125	P 2	TWD 10	VH2	-0.56	TEH	TEC			4	COLD	600UL
96	60	0.34	58	P 2	TWD 15	09H	-0.23	TEH	TEC	NEW		6	COLD	600UL
96	66	0.39	50	P 2	TWD 15	07H	+0.79	TEH	TEC	NEW		5	COLD	600UL
		0.33	44	P 2	TWD 13	08H	-0.13	TEH	TEC	NEW		5	COLD	600UL
96	68	0.33	103	P 2	TWD 13	09H	+0.77	TEH	TEC			5	COLD	600UL
		0.17	15	P 2	TWD 7	09H	-0.75	TEH	TEC			5	COLD	600UL
		0.33	101	P 2	TWD 13	09H	+0.77	TEH	TEC			5	COLD	600UL
		0.19	15	P 2	TWD 7	09H	-0.75	TEH	TEC			5	COLD	600UL
		0.25	11	P 2	TWD 10	DBH	+2.25	TEH	TEC	NEW		5	COLD	600UL
96	70	0.83	130	P 2	TWD 26	07H	+0.84	TEH	TEC			5	COLD	600UL
		0.84	129	P 2	TWD 26	07H	+0.84	TEH	TEC			5	COLD	600UL
		0.19	147	P 2	TWD 7	09H	-0.13	TEH	TEC	NEW		5	COLD	600UL
96	72	0.33	56	P 2	TWD 13	09H	+0.21	TEH	TEC			5	COLD	600UL
		0.21	94	P 2	TWD 8	09H	-0.96	TEH	TEC			5	COLD	600UL
		0.33	56	P 2	TWD 13	09H	+0.21	TEH	TEC			5	COLD	600UL
		0.21	94	P 2	TWD 8	09H	-0.96	TEH	TEC			5	COLD	600UL

MAI, MCI, MMI, MVI, SAI, SCI, SVI, 0-100%TWD

QUERY: rpc_icodes_and_0-100%twd.qry

ROW	LINE	VOLTS	DEG	CHN	IND	%TW	LOCATION	EXT	EXT	UTIL 1	UTIL 2	CAL #	LEG	PROBE
96	74	0.17	125	2	SAI		02H +1.24	02H	02H	0.26		125	HOT	580PP
96	88	0.29	65	P 2	TWD	11	07H +0.26	TEH	TEC			13	COLD	600UL
		0.30	43	P 2	TWD	13	07H +0.26	TEH	TEC			13	COLD	600UL
96	98	0.55	111	P 2	TWD	21	09H +0.60	TEH	TEC			13	COLD	600UL
		0.56	115	P 2	TWD	21	09H +0.60	TEH	TEC			13	COLD	600UL
96	110	0.31	108	P 2	TWD	11	09H +0.19	TEH	TEC			15	COLD	600UL
		0.31	108	P 2	TWD	11	09H +0.19	TEH	TEC			15	COLD	600UL
96	132	0.36	58	P 2	TWD	15	VH2 -0.71	TEH	TEC	NEW		20	COLD	600UL
96	152	0.31	117	P 2	TWD	15	02C +0 78	TEH	TEC			21	COLD	600UL
97	23	0.31	101	P 2	TWD	14	VH2 -0.76	TEC	TEH			73	HOT	600UL
		0.31	88	P 2	TWD	13	VH2 -0.76	TEC	TEH			73	HOT	600UL
97	43	0.35	56	P 2	TWD	16	VH2 -0.57	TEH	TEC			4	COLD	600UL
		0.31	78	P 2	TWD	14	VH2 +0.54	TEH	TEC			4	COLD	600UL
		0.31	78	P 2	TWD	14	VH2 +0.54	TEH	TEC			4	COLD	600UL
		0.32	53	P 2	TWD	14	VH2 -0.57	TEH	TEC			4	COLD	600UL
97	61	0.20	139	P 2	TWD	10	04C -0.88	TEH	TEC			6	COLD	600UL
97	65	0.35	125	P 2	TWD	13	09H -0.69	TEH	TEC	NEW		5	COLD	600UL
97	69	0.22	37	P 2	TWD	9	07H +0.90	TEH	TEC			5	COLD	600UL
		0.22	32	P 2	TWD	9	07H +0.90	TEH	TEC			5	COLD	600UL
97	73	0.43	113	P 2	TWD	17	08H +0.73	TEH	TEC			7	COLD	600UL
		0.48	127	P 2	TWD	18	09H +0.77	TEH	TEC			7	COLD	600UL
		0.21	120	P 2	TWD	9	08H -0.58	TEH	TEC			7	COLD	600UL
		0.45	111	P 2	TWD	17	08H +0.73	TEH	TEC			7	COLD	600UL
		0.21	134	P 2	TWD	9	08H -0.58	TEH	TEC			7	COLD	600UL
		0.50	129	P 2	TWD	19	09H +0.77	TEH	TEC			7	COLD	600UL
97	85	0.26	131	P 2	TWD	11	09H -0.17	TEH	TEC			8	COLD	600UL
		0.26	131	P 2	TWD	11	09H -0.17	TEH	TEC			8	COLD	600UL
97	103	0.66	124	P 2	TWD	25	09H +0.34	TEH	TEC			16	COLD	600UL
		0.66	124	P 2	TWD	25	09H +0.34	TEH	TEC			16	COLD	600UL
97	107	0.82	100	P 2	TWD	24	09H -0.67	TEH	TEC			15	COLD	600UL
		0.58	57	P 2	TWD	18	09H +0.06	TEH	TEC			15	COLD	600UL
		0.82	100	P 2	TWD	25	09H -0.67	TEH	TEC			15	COLD	600UL
		0.57	62	P 2	TWD	20	09H +0.06	TEH	TEC			15	COLD	600UL
98	24	0.36	141	P 2	TWD	15	06C +0.86	TEC	TEH			73	HOT	600UL
		0.22	68	P 2	TWD	11	06C +0.06	TEC	TEH			73	HOT	600UL
98	26	0.21	106	P 2	TWD	10	VC3 +0.78	TEC	TEH			73	HOT	600UL
		0.22	92	P 2	TWD	10	VC3 +0.78	TEC	TEH			73	HOT	600UL
98	38	0.27	149	P 2	TWD	13	VH2 -0.83	TEH	TEC			2	COLD	600UL
		0.28	141	P 2	TWD	13	VH2 -0.83	TEH	TEC			2	COLD	600UL
98	42	0.33	71	P 2	TWD	13	VH2 -0.82	TEH	TEC	NEW		3	COLD	600UL
98	48	0.28	137	P 2	TWD	13	VH2 -0.74	TEH	TEC			4	COLD	600UL
		0.28	137	P 2	TWD	13	VH2 -0.74	TEH	TEC			4	COLD	600UL
98	66	0.27	70	P 2	TWD	13	09H +0.91	TEH	TEC			6	COLD	600UL
		0.28	69	P 2	TWD	13	09H +0.91	TEH	TEC			6	COLD	600UL
98	70	0.39	78	P 2	TWD	15	VH3 +0.99	TEH	TEC			5	COLD	600UL
		1.24	122	P 2	TWD	33	VSM -0.84	TEH	TEC			5	COLD	600UL
		0.22	119	P 2	TWD	9	VC3 -0.96	TEH	TEC			5	COLD	600UL
		0.35	116	P 2	TWD	13	VC3 +1.01	TEH	TEC			5	COLD	600UL
		0.76	136	P 2	TWD	24	VH3 +0.99	TEH	TEC			5	COLD	600UL
		1.24	122	P 2	TWD	33	VSM -0.84	TEH	TEC			5	COLD	600UL
		0.22	119	P 2	TWD	9	VC3 -0.96	TEH	TEC			5	COLD	600UL
		0.30	120	P 2	TWD	12	VC3 +1.01	TEH	TEC			5	COLD	600UL

MAI, MCI, MMI, MVI, SAI, SCI, SVI, 0-100%TWD

QUERY: rpc_icodes_and_0-100%twd.qry

ROW	LINE	VOLTS	DEG	CHN	IND	%TW	LOCATION		EXT	EXT	UTIL 1	UTIL 2	CAL #	LEG	PROBE
98	72	0.70	83	P 2	TWD	26	07H	+0.93	TEH	TEC			6	COLD	600UL
		0.70	83	P 2	TWD	27	07H	+0.93	TEH	TEC			6	COLD	600UL
98	106	0.39	75	P 2	TWD	17	09H	-0.23	TEH	TEC			16	COLD	600UL
		0.43	142	P 2	TWD	19	09H	+0.88	TEH	TEC			16	COLD	600UL
		0.40	74	P 2	TWD	18	09H	-0.23	TEH	TEC			16	COLD	600UL
		0.44	142	P 2	TWD	19	09H	+0.88	TEH	TEC			16	COLD	600UL
98	142	0.44	152	P 2	TWD	19	VH2	-0.83	TEH	TEC			21	COLD	600UL
		0.44	152	P 2	TWD	19	VH2	-0.83	TEH	TEC			21	COLD	600UL
99	27	0.27	118	P 2	TWD	12	VH2	-0.70	TEC	TEH			73	HOT	600UL
		0.27	118	P 2	TWD	12	VH2	-0.70	TEC	TEH			73	HOT	600UL
99	29	0.29	104	P 2	TWD	12	DBH	+2.08	TEC	TEH			73	HOT	600UL
		0.29	104	P 2	TWD	13	DBH	+2.08	TEC	TEH			73	HOT	600UL
99	65	0.37	107	P 2	TWD	17	08H	+0.61	TEH	TEC			6	COLD	600UL
		0.37	112	P 2	TWD	17	08H	+0.61	TEH	TEC			6	COLD	600UL
99	79	0.28	83	P 2	TWD	12	07H	+0.91	TEH	TEC			8	COLD	600UL
		0.27	78	P 2	TWD	12	07H	+0.91	TEH	TEC			8	COLD	600UL
99	81	0.52	150	P 2	TWD	21	09H	+0.67	TEH	TEC			8	COLD	600UL
		0.52	150	P 2	TWD	21	09H	+0.67	TEH	TEC			8	COLD	600UL
99	89	0.76	92	P 2	TWD	25	09H	+0.70	TEH	TEC			13	COLD	600UL
		0.75	91	P 2	TWD	25	09H	+0.70	TEH	TEC			13	COLD	600UL
99	93	0.41	129	P 2	TWD	17	09H	+0.51	TEH	TEC			14	COLD	600UL
		0.41	129	P 2	TWD	17	09H	+0.51	TEH	TEC			14	COLD	600UL
99	99	0.55	74	P 2	TWD	21	09H	-0.15	TEH	TEC			13	COLD	600UL
		0.55	74	P 2	TWD	21	09H	-0.15	TEH	TEC			13	COLD	600UL
99	101	0.27	91	P 2	TWD	13	08H	-0.24	TEH	TEC			14	COLD	600UL
		0.44	117	P 2	TWD	18	09H	+0.71	TEH	TEC			14	COLD	600UL
		0.25	48	P 2	TWD	12	DBH	+1.09	TEH	TEC	NEW		14	COLD	600UL
		0.29	90	P 2	TWD	13	08H	-0.24	TEH	TEC			14	COLD	600UL
		0.44	117	P 2	TWD	18	09H	+0.71	TEH	TEC			14	COLD	600UL
99	103	0.72	114	P 2	TWD	23	09H	+0.97	TEH	TEC			15	COLD	600UL
		0.12	130	P 2	TWD	6	09H	+0.22	TEC	TEH			15	COLD	600UL
		0.81	86	P 2	TWD	23	09H	+0.97	TEH	TEC			15	COLD	600UL
		0.18	144	P 2	TWD	6	09H	+0.22	TEH	TEC			15	COLD	600UL
99	109	0.23	148	P 2	TWD	8	09H	+0.73	TEH	TEC			15	COLD	600UL
		0.24	147	P 2	TWD	10	09H	+0.73	TEH	TEC			15	COLD	600UL
100	38	0.29	145	P 2	TWD	13	VH2	-0.70	TEH	TEC			2	COLD	600UL
		0.29	145	P 2	TWD	13	VH2	-0.70	TEH	TEC			2	COLD	600UL
100	46	0.29	47	P 2	TWD	13	VH2	-0.56	TEH	TEC			4	COLD	600UL
		0.29	46	P 2	TWD	13	VH2	-0.56	TEH	TEC			4	COLD	600UL
100	60	0.63	97	P 2	TWD	24	VH2	-0.67	TEH	TEC			6	COLD	600UL
		0.56	89	P 2	TWD	22	VH2	-0.67	TEH	TEC			6	COLD	600UL
100	74	0.34	82	P 2	TWD	13	09H	-0.06	TEH	TEC			7	COLD	600UL
		0.13	48	P 2	TWD	5	09H	+1.01	TEH	TEC			7	COLD	600UL
		0.34	81	P 2	TWD	14	09H	-0.06	TEH	TEC			7	COLD	600UL
		0.24	160	P 2	TWD	10	09H	+1.01	TEH	TEC			7	COLD	600UL
100	100	0.51	120	P 2	TWD	21	09H	+0.90	TEH	TEC			14	COLD	600UL
		0.51	120	P 2	TWD	21	09H	+0.90	TEH	TEC			14	COLD	600UL
100	102	0.47	122	P 2	TWD	18	09H	-0.24	TEH	TEC			15	COLD	600UL
		0.49	120	P 2	TWD	16	09H	-0.24	TEH	TEC			15	COLD	600UL
100	120	0.34	156	P 2	TWD	15	VH2	-0.86	TEH	TEC			18	COLD	600UL
		0.35	155	P 2	TWD	15	VH2	-0.86	TEH	TEC			18	COLD	600UL
100	134	0.18	146	P 2	TWD	8	DBC	+1.59	TEH	TEC	NEW		20	COLD	600UL
100	148	0.44	100	P 2	TWD	16	VH2	-0.85	TEH	TEC			19	COLD	600UL

MAI, MCI, MMI, MVI, SAI, SCI, SVI, 0-100%TWD

QUERY: rpc_icodes_and_0-100%twd.qry

ROW	LINE	VOLTS	DEG	CHN	IND	%TW	LOCATION		EXT	EXT	UTIL 1	UTIL 2	CAL #	LEG	PROBE
		0.46	122	P 2	TWD	17	VH2	-0.85	TEH	TEC			19	COLD	600UL
101	27	0.37	141	P 2	TWD	15	VH2	-0.74	TEC	TEH			73	HOT	600UL
		0.37	141	P 2	TWD	16	VH2	-0.74	TEC	TEH			73	HOT	600UL
101	67	0.48	61	P 2	TWD	20	09H	+0.97	TEH	TEC			6	COLD	600UL
		0.38	44	P 2	TWD	17	09H	+0.97	TEH	TEC			6	COLD	600UL
101	71	0.23	91	P 2	TWD	11	DBH	-1.69	TEH	TEC			6	COLD	600UL
		0.23	91	P 2	TWD	11	DBH	-1.69	TEH	TEC			6	COLD	600UL
101	77	0.26	133	P 2	TWD	11	09H	-0.69	TEH	TEC			7	COLD	600UL
		0.75	87	P 2	TWD	25	09H	+0.66	TEH	TEC			7	COLD	600UL
		0.74	87	P 2	TWD	25	09H	+0.66	TEH	TEC			7	COLD	600UL
		0.26	133	P 2	TWD	11	09H	-0.69	TEH	TEC			7	COLD	600UL
101	79	0.30	75	P 2	TWD	12	09H	-1.05	TEH	TEC			7	COLD	600UL
		0.67	67	P 2	TWD	23	09H	+0.96	TEH	TEC			7	COLD	600UL
		0.30	59	P 2	TWD	12	09H	-1.05	TEH	TEC			7	COLD	600UL
		0.68	67	P 2	TWD	23	09H	+0.96	TEH	TEC			7	COLD	600UL
101	81	0.66	138	P 2	TWD	23	09H	-0.77	TEH	TEC			7	COLD	600UL
		0.66	138	P 2	TWD	23	09H	-0.77	TEH	TEC			7	COLD	600UL
101	83	0.69	136	P 2	TWD	23	09H	-0.47	TEH	TEC			7	COLD	600UL
		0.69	135	P 2	TWD	23	09H	-0.47	TEH	TEC			7	COLD	600UL
101	85	0.43	102	P 2	TWD	18	09H	-0.47	TEH	TEC			8	COLD	600UL
		0.43	102	P 2	TWD	18	09H	-0.47	TEH	TEC			8	COLD	600UL
101	95	0.34	37	P 2	TWD	15	09H	-0.19	TEH	TEC			14	COLD	600UL
		0.33	37	P 2	TWD	15	09H	+0.84	TEH	TEC			14	COLD	600UL
		0.33	34	P 2	TWD	15	09H	-0.19	TEH	TEC			14	COLD	600UL
		0.33	37	P 2	TWD	15	09H	+0.84	TEH	TEC			14	COLD	600UL
101	97	0.70	114	P 2	TWD	25	09H	-0.99	TEH	TEC			14	COLD	600UL
		0.70	114	P 2	TWD	25	09H	-0.99	TEH	TEC			14	COLD	600UL
101	101	0.27	22	P 2	TWD	10	09H	-0.24	TEH	TEC			13	COLD	600UL
		0.28	23	P 2	TWD	12	09H	-0.24	TEH	TEC			13	COLD	600UL
101	111	0.45	76	P 2	TWD	19	VH2	+0.98	TEH	TEC			16	COLD	600UL
		0.46	73	P 2	TWD	20	VH2	+0.98	TEH	TEC			16	COLD	600UL
102	28	0.26	75	P 2	TWD	11	VH2	+0.74	TEC	TEH			73	HOT	600UL
		0.45	43	P 2	TWD	18	VH2	-0.78	TEC	TEH			73	HOT	600UL
		0.26	75	P 2	TWD	12	VH2	+0.74	TEC	TEH			73	HOT	600UL
		0.45	43	P 2	TWD	18	VH2	-0.78	TEC	TEH			73	HOT	600UL
102	30	0.46	92	P 2	TWD	18	08C	-0.99	TEC	TEH			73	HOT	600UL
		0.21	73	P 2	TWD	10	08C	+0.08	TEC	TEH			73	HOT	600UL
		0.46	92	P 2	TWD	18	08C	-0.99	TEC	TEH			73	HOT	600UL
		0.21	73	P 2	TWD	10	08C	+0.08	TEC	TEH			73	HOT	600UL
102	34	0.26	97	P 2	TWD	11	VH2	+0.68	TEC	TEH			76	HOT	600UL
		0.29	87	P 2	TWD	13	VH2	+0.68	TEC	TEH			76	HOT	600UL
102	38	0.24	140	P 2	TWD	11	VH2	-0.73	TEH	TEC			2	COLD	600UL
		0.24	140	P 2	TWD	11	VH2	-0.73	TEH	TEC			2	COLD	600UL
102	48	0.38	79	P 2	TWD	16	VH2	-0.57	TEH	TEC			4	COLD	600UL
		0.41	68	P 2	TWD	17	VH2	-0.57	TEH	TEC			4	COLD	600UL
102	66	0.26	124	P 2	TWD	13	09H	+0.89	TEH	TEC			6	COLD	600UL
		0.29	102	P 2	TWD	14	VH2	-0.82	TEH	TEC			6	COLD	600UL
		0.26	124	P 2	TWD	13	09H	+0.89	TEH	TEC			6	COLD	600UL
		0.29	102	P 2	TWD	14	VH2	-0.82	TEH	TEC			6	COLD	600UL
102	74	0.26	152	P 2	TWD	12	09H	+0.56	TEH	TEC			8	COLD	600UL
		0.23	155	P 2	TWD	10	09H	+0.56	TEH	TEC			8	COLD	600UL
102	78	0.53	125	P 2	TWD	21	09H	+0.97	TEH	TEC			8	COLD	600UL
		0.53	125	P 2	TWD	21	09H	+0.97	TEH	TEC			8	COLD	600UL
102	80	0.47	101	P 2	TWD	19	09H	-0.13	TEH	TEC			8	COLD	600UL

MAI, MCI, MMI, MVI, SAI, SCI, SVI, 0-100%TWD

QUERY: rpc_icodes_and_0-100%twd.qry

ROW	LINE	VOLTS	DEG	CHN	IND	%TW	LOCATION		EXT	EXT	UTIL 1	UTIL 2	CAL #	LEG	PROBE
		0.25	137	P 2	TWD	11	09H	+0.82	TEH	TEC			8	COLD	600UL
		0.21	73	P 2	TWD	9	DBH	+2.08	TEH	TEC	NEW		8	COLD	600UL
		0.46	108	P 2	TWD	19	09H	-0.13	TEH	TEC			8	COLD	600UL
		0.28	133	P 2	TWD	12	09H	+0.82	TEH	TEC			8	COLD	600UL
		0.30	98	P 2	TWD	12	DBH	+1.70	TEH	TEC	NEW		22	COLD	600UL
102	82	0.26	109	P 2	TWD	11	09H	+0.69	TEH	TEC			8	COLD	600UL
		0.31	119	P 2	TWD	14	DBH	+2.16	TEH	TEC			8	COLD	600UL
		0.26	109	P 2	TWD	11	09H	+0.69	TEH	TEC			8	COLD	600UL
		0.31	119	P 2	TWD	14	DBH	+2.16	TEH	TEC			8	COLD	600UL
102	84	0.27	61	P 2	TWD	12	DBH	+1.46	TEH	TEC			8	COLD	600UL
		0.29	99	P 2	TWD	13	DBH	+1.46	TEH	TEC			8	COLD	600UL
102	92	0.20	61	P 2	TWD	9	DBH	+1.84	TEH	TEC			13	COLD	600UL
		0.20	61	P 2	TWD	9	DBH	+1.84	TEH	TEC			13	COLD	600UL
102	108	0.45	118	P 2	TWD	20	VH2	-0.77	TEH	TEC	NEW		16	COLD	600UL
103	33	0.40	112	P 2	TWD	17	VH2	+0.89	TEC	TEH			76	HOT	600UL
		0.41	107	P 2	TWD	17	VH2	+0.89	TEC	TEH			76	HOT	600UL
103	41	0.18	151	P 2	TWD	7	VC2	-1.01	TEH	TEC			1	COLD	600UL
		0.18	151	P 2	TWD	7	VC2	-1.01	TEH	TEC			1	COLD	600UL
103	55	0.26	133	P 1	SCI		TSH	+0.11	TSH	TSH	0.00	9.26	11	HOT	580PP
103	71	0.42	122	P 2	TWD	16	09H	+0.96	TEH	TEC			5	COLD	600UL
		0.42	122	P 2	TWD	16	09H	+0.96	TEH	TEC			5	COLD	600UL
103	75	0.41	126	P 2	TWD	17	09H	-0 86	TEH	TEC			8	COLD	600UL
		0.26	108	P 2	TWD	11	09H	+0.47	TEH	TEC			8	COLD	600UL
		0.34	80	P 2	TWD	15	09H	+0.71	TEH	TEC			8	COLD	600UL
		0.34	82	P 2	TWD	15	09H	+1.01	TEH	TEC			8	COLD	600UL
		0.45	61	P 2	TWD	18	VH2	+0.71	TEH	TEC			8	COLD	600UL
		0.45	61	P 2	TWD	18	VH2	+0.71	TEH	TEC			8	COLD	600UL
		0.41	126	P 2	TWD	17	09H	-0.86	TEH	TEC			8	COLD	600UL
		0.26	107	P 2	TWD	11	09H	+0.47	TEH	TEC			8	COLD	600UL
		0.34	82	P 2	TWD	15	09H	+0.71	TEH	TEC			8	COLD	600UL
		0.36	105	P 2	TWD	15	09H	+1.01	TEH	TEC			8	COLD	600UL
103	79	0.25	155	P 2	TWD	11	09H	-0.93	TEH	TEC			8	COLD	600UL
		0.34	94	P 2	TWD	15	09H	+0.20	TEH	TEC			8	COLD	600UL
		0.38	132	P 2	TWD	16	09H	+0.67	TEH	TEC			8	COLD	600UL
		0.34	94	P 2	TWD	15	09H	+0.20	TEH	TEC			8	COLD	600UL
		0.25	155	P 2	TWD	11	09H	-0.93	TEH	TEC			8	COLD	600UL
		0.39	131	P 2	TWD	16	09H	+0.67	TEH	TEC			8	COLD	600UL
103	81	0.55	100	P 2	TWD	21	09H	+0.86	TEH	TEC			8	COLD	600UL
		0.55	100	P 2	TWD	21	09H	+0.86	TEH	TEC			8	COLD	600UL
103	85	0.36	96	P 2	TWD	14	09H	+0.21	TEH	TEC			7	COLD	600UL
		0.36	95	P 2	TWD	15	09H	+0.21	TEH	TEC			7	COLD	600UL
103	87	0.40	129	P 2	TWD	17	09H	+0.00	TEH	TEC			8	COLD	600UL
		0.44	118	P 2	TWD	18	09H	+0.00	TEH	TEC			8	COLD	600UL
103	97	0.27	39	P 2	TWD	11	09H	+0.90	TEH	TEC			13	COLD	600UL
		0.31	113	P 2	TWD	13	09H	-0.92	TEH	TEC			13	COLD	600UL
		0.42	57	P 2	TWD	17	09H	+0.90	TEH	TEC			13	COLD	600UL
		0.28	27	P 2	TWD	12	09H	-0.92	TEH	TEC			13	COLD	600UL
103	103	0.17	111	2	SAI		TSH	+3.16	TSH	TSH	.29	10.16	65	HOT	580PP
104	32	0.26	79	P 2	TWD	11	VH2	-0.82	TEC	TEH			73	HOT	600UL
		0.26	79	P 2	TWD	11	VH2	-0.82	TEC	TEH			73	HOT	600UL
104	46	0.25	161	P 2	TWD	12	VH2	-0.93	TEH	TEC			4	COLD	600UL
		0.25	161	P 2	TWD	12	VH2	-0.93	TEH	TEC			4	COLD	600UL
104	78	0.16	141	P 2	TWD	6	09H	+0.41	TEH	TEC			7	COLD	600UL
		0.16	141	P 2	TWD	7	09H	+0.41	TEH	TEC			7	COLD	600UL
104	88	0.44	91	P 2	TWD	17	08H	+0.51	TEH	TEC			13	COLD	600UL
		0.43	89	P 2	TWD	17	08H	+0.51	TEH	TEC			13	COLD	600UL

MAI, MCI, MMI, MVI, SAI, SCI, SVI, 0-100%TWD

QUERY: rpc_icodes_and_0-100%twd.qry

ROW	LINE	VOLTS	DEG	CHN	IND	%TW	LOCATION		EXT	EXT	UTIL 1	UTIL 2	CAL #	LEG	PROBE
104	120	0.33	99	P 2	TWD 15	VH2		-0.81	TEH	TEC			18	COLD	600UL
		0.31	106	P 2	TWD 14	VH2		-0.81	TEH	TEC			18	COLD	600UL
104	138	0.33	98	P 2	TWD 14	VH2		-0.87	TEH	TEC	NEW		20	COLD	600UL
105	49	0.25	85	P 2	TWD 12	VH2		-0.82	TEH	TEC			4	COLD	600UL
		0.25	85	P 2	TWD 12	VH2		-0.82	TEH	TEC			4	COLD	600UL
105	79	0.51	74	P 2	TWD 19	09H		-1.12	TEH	TEC			7	COLD	600UL
		0.54	70	P 2	TWD 20	09H		-1.12	TEH	TEC			7	COLD	600UL
105	101	0.26	33	P 2	TWD 11	VH2		+0.34	TEH	TEC			13	COLD	600UL
		0.26	33	P 2	TWD 11	VH2		+0.34	TEH	TEC			13	COLD	600UL
105	105	0.37	132	P 2	TWD 16	VH2		-0.75	TEH	TEC			16	COLD	600UL
		0.39	129	P 2	TWD 18	VH2		-0.75	TEH	TEC			16	COLD	600UL
105	113	0.40	99	P 2	TWD 18	VH2		-1.03	TEH	TEC			16	COLD	600UL
		0.30	149	P 2	TWD 14	09H		-1.11	TEH	TEC			16	COLD	600UL
		0.31	152	P 2	TWD 15	09H		-1.11	TEH	TEC			16	COLD	600UL
		0.41	89	P 2	TWD 19	VH2		-1.03	TEH	TEC			16	COLD	600UL
106	34	0.42	28	P 2	TWD 17	VH2		+0.66	TEC	TEH			76	HOT	600UL
		0.28	141	P 2	TWD 12	VH2		-0.93	TEC	TEH			76	HOT	600UL
		0.35	43	P 2	TWD 15	VH2		+0.66	TEC	TEH			76	HOT	600UL
		0.27	144	P 2	TWD 12	VH2		-0.93	TEC	TEH			76	HOT	600UL
106	48	0.34	17	P 2	TWD 15	DBH		+1.98	TEH	TEC	NEW		4	COLD	600UL
106	50	0.38	151	P 2	TWD 15	VH2		-0.71	TEH	TEC			3	COLD	600UL
		0.57	113	P 2	TWD 20	VH2		+0.83	TEH	TEC			3	COLD	600UL
		0.23	152	P 2	TWD 10	VH3		+0.90	TEH	TEC			3	COLD	600UL
		0.38	151	P 2	TWD 15	VH2		-0.71	TEH	TEC			3	COLD	600UL
		0.23	152	P 2	TWD 10	VH3		+0.90	TEH	TEC			3	COLD	600UL
		0.57	104	P 2	TWD 20	VH2		+0.83	TEH	TEC			3	COLD	600UL
106	52	0.22	33	P 2	TWD 9	DBC		-1.89	TEH	TEC	NEW		3	COLD	600UL
106	72	0.45	146	P 2	TWD 19	VC2		-0.82	TEH	TEC			6	COLD	600UL
		0.45	146	P 2	TWD 19	VC2		-0.82	TEH	TEC			6	COLD	600UL
106	74	0.42	55	P 2	TWD 18	VH2		-0.73	TEH	TEC			8	COLD	600UL
		0.41	69	P 2	TWD 17	VH2		-0.73	TEH	TEC			8	COLD	600UL
106	86	0.55	106	P 2	TWD 21	VH3		-0.84	TEH	TEC			8	COLD	600UL
		0.55	106	P 2	TWD 21	VH3		-0.84	TEH	TEC			8	COLD	600UL
106	100	0.43	130	P 2	TWD 16	09H		-0.88	TEH	TEC			13	COLD	600UL
		0.45	134	P 2	TWD 18	09H		-0.88	TEH	TEC			13	COLD	600UL
106	120	0.19	58	P 2	TWD 7	DBC		+1.41	TEH	TEC	NEW		17	COLD	600UL
106	134	0.79	100	P 2	TWD 24	VH2		-0.90	TEH	TEC			19	COLD	600UL
		0.79	100	P 2	TWD 24	VH2		-0.90	TEH	TEC			19	COLD	600UL
106	140	0.53	105	P 2	TWD 18	VH2		-0.90	TEH	TEC			19	COLD	600UL
		0.55	125	P 2	TWD 19	VH2		-0.90	TEH	TEC			19	COLD	600UL
107	29	0.26	148	P 2	TWD 11	VH2		-0.60	TEC	TEH			73	HOT	600UL
		0.28	158	P 2	TWD 12	VH2		-0.60	TEC	TEH			73	HOT	600UL
107	31	0.35	65	P 2	TWD 14	VH2		-0.99	TEC	TEH			73	HOT	600UL
		0.36	49	P 2	TWD 15	VH2		-0.99	TEC	TEH			73	HOT	600UL
107	107	0.35	137	P 2	TWD 16	VH3		+0.88	TEH	TEC			16	COLD	600UL
		0.35	134	P 2	TWD 17	VH3		+0.88	TEH	TEC			16	COLD	600UL
107	143	0.49	95	P 2	TWD 17	VH2		-0.96	TEH	TEC			19	COLD	600UL
		0.49	95	P 2	TWD 17	VH2		-0.96	TEH	TEC			19	COLD	600UL
108	30	0.31	107	P 2	TWD 14	VH2		-0.82	TEC	TEH			73	HOT	600UL
		0.31	107	P 2	TWD 14	VH2		-0.82	TEC	TEH			73	HOT	600UL
108	46	0.25	141	P 2	TWD 12	VH2		-0.89	TEH	TEC			4	COLD	600UL

MAI, MCI, MMI, MVI, SAI, SCI, SVI, 0-100%TWD

QUERY: rpc_icodes_and_0-100%twd.qry

ROW	LINE	VOLTS	DEG	CHN	IND	%TW	LOCATION		EXT	EXT	UTIL 1	UTIL 2	CAL #	LEG	PROBE
		0.23	129	P 2	TWD	11	VH2	+0.93	TEH	TEC			4	COLD	600UL
		0.24	141	P 2	TWD	11	VH2	-0.89	TEH	TEC			4	COLD	600UL
		0.23	129	P 2	TWD	11	VH2	+0.93	TEH	TEC			4	COLD	600UL
108	50	0.25	105	P 2	TWD	12	VH2	+0.84	TEH	TEC			4	COLD	600UL
		0.25	105	P 2	TWD	12	VH2	+0.84	TEH	TEC			4	COLD	600UL
108	64	0.24	11	P 2	TWD	9	DBH	+2.21	TEH	TEC	NEW		5	COLD	600UL
108	138	0.29	140	P 2	TWD	12	VH2	-0.80	TEH	TEC			20	COLD	600UL
		0.34	77	P 2	TWD	14	VH2	-0.80	TEH	TEC			20	COLD	600UL
108	142	0.51	55	P 2	TWD	18	VH2	-0.86	TEH	TEC			19	COLD	600UL
		0.55	61	P 2	TWD	19	VH2	-0.86	TEH	TEC			19	COLD	600UL
109	31	0.24	40	P 2	TWD	10	DBC	-2.10	TEC	TEH	NEW		73	HOT	600UL
109	37	0.17	166	P 2	TWD	8	DBC	+1.75	TEH	TEC	NEW		2	COLD	600UL
109	47	0.24	138	P 2	TWD	11	09C	-0.92	TEH	TEC			4	COLD	600UL
		0.24	138	P 2	TWD	11	09C	-0.92	TEH	TEC			4	COLD	600UL
110	32	0.37	132	P 2	TWD	16	02H	-0.87	TEC	TEH			73	HOT	600UL
110	38	0.13	134	P 2	TWD	6	DBH	+2.07	TEH	TEC			2	COLD	600UL
		0.13	134	P 2	TWD	6	DBH	+2.07	TEH	TEC			2	COLD	600UL
110	40	0.29	12	P 2	TWD	11	DBH	+1.82	TEH	TEC			1	COLD	600UL
		0.33	8	P 2	TWD	12	DBH	+1.82	TEH	TEC			1	COLD	600UL
110	42	0.18	40	P 2	TWD	8	VH2	-0.60	TEH	TEC			3	COLD	600UL
		0.12	150	P 2	TWD	5	VH2	+0.84	TEH	TEC			3	COLD	600UL
		0.19	46	P 2	TWD	8	VH2	-0.60	TEH	TEC			3	COLD	600UL
		0.12	158	P 2	TWD	5	VH2	+0.84	TEH	TEC			3	COLD	600UL
110	66	0.29	117	P 2	TWD	13	VH2	-1.02	TEH	TEC			6	COLD	600UL
		0.26	134	P 2	TWD	13	VH2	-1.02	TEH	TEC			6	COLD	600UL
110	68	0.29	160	P 2	TWD	14	VH2	-0.97	TEH	TEC			6	COLD	600UL
		0.28	159	P 2	TWD	13	VH2	-0.97	TEH	TEC			6	COLD	600UL
110	72	0.38	74	P 2	TWD	17	VH2	-1.03	TEH	TEC			6	COLD	600UL
		0.38	74	P 2	TWD	17	VH2	-1.03	TEH	TEC			6	COLD	600UL
110	136	0.42	63	P 2	TWD	17	VH2	-0.73	TEH	TEC	NEW		20	COLD	600UL
110	140	0.41	114	P 2	TWD	15	VH2	+0.60	TEH	TEC			19	COLD	600UL
		0.44	124	P 2	TWD	16	VH2	+0.60	TEH	TEC			19	COLD	600UL
110	142	0.38	91	P 2	TWD	17	VC2	-0.90	TEH	TEC			21	COLD	600UL
		0.38	91	P 2	TWD	17	VC2	-0.90	TEH	TEC			21	COLD	600UL
111	33	0.32	76	P 2	TWD	14	VH2	-0.89	TEC	TEH			76	HOT	600UL
		0.32	76	P 2	TWD	14	VH2	-0.89	TEC	TEH			76	HOT	600UL
111	35	0.79	106	P 2	TWD	26	VH2	-1.02	TEC	TEH			76	HOT	600UL
		0.80	104	P 2	TWD	26	VH2	-1.02	TEC	TEH			76	HOT	600UL
111	37	0.49	115	P 2	TWD	17	VH2	-0.97	TEH	TEC			1	COLD	600UL
		0.49	115	P 2	TWD	17	VH2	-0.97	TEH	TEC			1	COLD	600UL
111	39	0.37	85	P 2	TWD	16	VH2	-0.97	TEH	TEC			2	COLD	600UL
		0.37	85	P 2	TWD	16	VH2	-0.97	TEH	TEC			2	COLD	600UL
111	43	0.59	97	P 2	TWD	21	VH2	-0.95	TEH	TEC			3	COLD	600UL
		0.59	97	P 2	TWD	21	VH2	-0.95	TEH	TEC			3	COLD	600UL
111	107	0.62	110	P 2	TWD	24	VH2	-0.72	TEH	TEC			16	COLD	600UL
		0.63	100	P 2	TWD	25	VH2	-0.72	TEH	TEC			16	COLD	600UL
112	34	0.28	109	P 2	TWD	12	VH2	-0.97	TEC	TEH			76	HOT	600UL
		0.30	119	P 2	TWD	13	VH2	-0.97	TEC	TEH			76	HOT	600UL
112	72	0.49	93	P 2	TWD	18	VH2	-0.75	TEH	TEC			5	COLD	600UL
		0.49	93	P 2	TWD	18	VH2	-0.75	TEH	TEC			5	COLD	600UL

MAI, MCI, MMI, MVI, SAI, SCI, SVI, 0-100%TWD

QUERY: rpc_icodes_and_0-100%twd.qry

ROW	LINE	VOLTS	DEG	CHN	IND	%TW	LOCATION		EXT	EXT	UTIL 1	UTIL 2	CAL #	LEG	PROBE
112	76	0.24	131	P 2	TWD 11	VH2	-0.91		TEH	TEC			8	COLD	600UL
		0.30	130	P 2	TWD 13	VH2	-0.91		TEH	TEC			8	COLD	600UL
112	80	0.26	123	P 2	TWD 11	09H	-1.12		TEH	TEC			7	COLD	600UL
		0.48	113	P 2	TWD 18	09H	-1.12		TEH	TEC			7	COLD	600UL
112	86	0.24	61	P 2	TWD 10	08H	+1.03		TEH	TEC			7	COLD	600UL
		0.23	57	P 2	TWD 10	08H	+1.03		TEH	TEC			7	COLD	600UL
112	122	0.66	64	P 2	TWD 22	04C	-0.90		TEH	TEC			17	COLD	600UL
112	132	0.37	29	P 2	TWD 15	VC3	+0.67		TEH	TEC			20	COLD	600UL
		0.33	61	P 2	TWD 14	VC2	-0.90		TEH	TEC			20	COLD	600UL
		0.35	30	P 2	TWD 15	VC3	+0.67		TEH	TEC			20	COLD	600UL
		0.33	55	P 2	TWD 14	VC2	-0.90		TEH	TEC			20	COLD	600UL
112	138	0.33	151	P 2	TWD 14	VH2	-0.81		TEH	TEC			20	COLD	600UL
		0.38	112	P 2	TWD 16	VH2	-0.81		TEH	TEC			20	COLD	600UL
113	37	0.32	140	P 2	TWD 14	VH2	-0.91		TEC	TEH			76	HOT	600UL
		0.32	140	P 2	TWD 14	VH2	-0.91		TEC	TEH			76	HOT	600UL
113	39	0.43	101	P 2	TWD 15	VH2	-0.96		TEH	TEC			1	COLD	600UL
		0.43	101	P 2	TWD 15	VH2	-0.96		TEH	TEC			1	COLD	600UL
113	41	0.27	50	P 2	TWD 10	DBH	+2.09		TEH	TEC	NEW		1	COLD	600UL
113	49	0.26	147	2	SVI	DBH	+1.06	TO+1.40	DBH	DBH	0.33	0.38	153	HOT	580FH
113	69	0.41	30	P 2	TWD 15	VH2	-0.73		TEH	TEC	NEW		5	COLD	600UL
113	81	0.32	109	P 2	TWD 13	DBH	+1.71		TEH	TEC			7	COLD	600UL
		0.31	108	P 2	TWD 13	DBH	+1.71		TEH	TEC			7	COLD	600UL
113	109	0.11	32	P 2	TWD 6	DBH	+2.22		TEH	TEC	NEW		16	COLD	600UL
113	117	0.20	26	P 2	TWD 10	DBH	+1.91		TEH	TEC	NEW		18	COLD	600UL
113	133	0.34	42	P 2	TWD 14	VH2	-0.70		TEH	TEC	NEW		20	COLD	600UL
114	34	0.36	61	P 2	TWD 15	DBC	+1.86		TEC	TEH			76	HOT	600UL
		0.36	60	P 2	TWD 15	DBC	+1.86		TEC	TEH			76	HOT	600UL
114	42	0.19	156	P 2	TWD 8	DBH	+2.02		TEH	TEC			3	COLD	600UL
		0.19	156	P 2	TWD 8	DBH	+2.02		TEH	TEC			3	COLD	600UL
114	84	0.33	91	P 2	TWD 13	DBH	+2.23		TEH	TEC			7	COLD	600UL
		0.30	109	P 2	TWD 13	DBH	+2.23		TEH	TEC			7	COLD	600UL
114	90	0.23	95	P 2	TWD 11	VH3	-0.85		TEH	TEC			14	COLD	600UL
		0.23	95	P 2	TWD 11	VH3	-0.85		TEH	TEC			14	COLD	600UL
114	92	0.45	104	P 2	TWD 18	DBH	+1.49		TEH	TEC			13	COLD	600UL
		0.45	104	P 2	TWD 18	DBH	+1.49		TEH	TEC			13	COLD	600UL
114	94	0.31	22	P 2	TWD 14	DBH	-0.66		TEH	TEC			14	COLD	600UL
		0.31	22	P 2	TWD 14	DBH	-0.66		TEH	TEC			14	COLD	600UL
114	96	0.26	150	P 2	TWD 12	DBH	+1.71		TEH	TEC			14	COLD	600UL
		0.26	150	P 2	TWD 12	DBH	+1.71		TEH	TEC			14	COLD	600UL
114	104	0.27	126	P 2	TWD 10	03H	+0.86		TEH	TEC			15	COLD	600UL
114	126	0.35	141	P 2	TWD 15	VC2	-0.85		TEH	TEC			18	COLD	600UL
		0.33	140	P 2	TWD 14	VC2	-0.85		TEH	TEC			18	COLD	600UL
114	138	0.60	82	P 2	TWD 20	VH2	-0.77		TEH	TEC			19	COLD	600UL
		0.60	82	P 2	TWD 20	VH2	-0.77		TEH	TEC			19	COLD	600UL
115	39	0.26	101	P 2	TWD 12	VH2	-1.00		TEH	TEC			2	COLD	600UL
		0.25	100	P 2	TWD 12	VH2	-1.00		TEH	TEC			2	COLD	600UL
115	107	0.17	77	P 2	TWD 9	DBH	+1.99		TEH	TEC	NEW		16	COLD	600UL

MAI, MCI, MMI, MVI, SAI, SCI, SVI, 0-100%TWD

QUERY: rpc_icodes_and_0-100%twd.qry

ROW	LINE	VOLTS	DEG	CHN	IND	%TW	LOCATION		EXT	EXT	UTIL 1	UTIL 2	CAL #	LEG	PROBE
115	133	0.52	51	P 2	TWD	18	VH1	+0.96	TEH	TEC			19	COLD	600UL
		0.54	57	P 2	TWD	19	VH1	+0.96	TEH	TEC			19	COLD	600UL
116	54	0.25	170	P 2	TWD	12	DBH	+2.19	TEH	TEC	NEW		4	COLD	600UL
116	64	0.21	16	P 2	TWD	8	DBH	+2.25	TEH	TEC	NEW		5	COLD	600UL
116	90	0.21	128	P 2	TWD	9	DBH	+1.80	TEH	TEC			13	COLD	600UL
		0.21	128	P 2	TWD	9	DBH	+1.80	TEH	TEC			13	COLD	600UL
116	132	0.63	151	P 2	TWD	23	VH1	-0.64	TEH	TEC	NEW		20	COLD	600UL
117	43	0.25	73	P 2	TWD	11	VH2	-1.01	TEH	TEC			4	COLD	600UL
		0.25	73	P 2	TWD	11	VH2	-1.01	TEH	TEC			4	COLD	600UL
117	83	0.47	64	P 2	TWD	18	VH2	-0.69	TEH	TEC			7	COLD	600UL
		0.47	71	P 2	TWD	18	VH2	-0.69	TEH	TEC			7	COLD	600UL
117	109	0.44	136	P 2	TWD	20	VH2	-0.73	TEH	TEC	NEW		16	COLD	600UL
118	40	0.29	126	P 2	TWD	11	DBH	-1.79	TEH	TEC			1	COLD	600UL
		0.28	123	P 2	TWD	11	DBH	-1.79	TEH	TEC			1	COLD	600UL
118	48	0.39	129	P 2	TWD	15	VH1	-0.77	TEH	TEC			3	COLD	600UL
		0.34	142	P 2	TWD	14	VH1	-0.77	TEH	TEC			3	COLD	600UL
118	52	0.25	125	P 2	TWD	10	VH2	+0.87	TEH	TEC			3	COLD	600UL
		0.25	125	P 2	TWD	10	VH2	+0.87	TEH	TEC			3	COLD	600UL
118	54	0.79	27	P 2	TWD	25	DBH	+2.23	TEH	TEC			3	COLD	600UL
		0.79	27	P 2	TWD	25	DBH	+2.23	TEH	TEC			3	COLD	600UL
118	74	0.30	134	P 2	TWD	13	VH1	-0.73	TEH	TEC			8	COLD	600UL
		0.25	128	P 2	TWD	11	VH1	-0.73	TEH	TEC			8	COLD	600UL
118	78	0.31	149	P 2	TWD	13	VH1	-0.69	TEH	TEC			8	COLD	600UL
		0.30	147	P 2	TWD	13	VH1	-0.69	TEH	TEC			8	COLD	600UL
118	80	0.33	81	P 2	TWD	14	VH2	+0.89	TEH	TEC			8	COLD	600UL
		0.38	103	P 2	TWD	16	VH2	+0.89	TEH	TEC			8	COLD	600UL
118	86	0.30	150	P 2	TWD	13	VH1	-0.71	TEH	TEC			8	COLD	600UL
		0.35	154	P 2	TWD	15	VH1	-0.71	TEH	TEC			8	COLD	600UL
118	92	0.55	38	P 2	TWD	21	DBH	+1.73	TEH	TEC			13	COLD	600UL
		0.55	38	P 2	TWD	21	DBH	+1.73	TEH	TEC			13	COLD	600UL
118	106	0.19	80	P 2	TWD	10	VC1	+0.82	TEH	TEC			16	COLD	600UL
		0.24	84	P 2	TWD	12	VC1	+0.82	TEH	TEC			16	COLD	600UL
119	37	0.16	116	P 2	TWD	7	DBC	-1.42	TEC	TEH			76	HOT	600UL
		0.18	115	P 2	TWD	8	DBC	-1.42	TEC	TEH			76	HOT	600UL
119	45	0.48	129	P 2	TWD	20	VH1	+0.75	TEH	TEC			4	COLD	600UL
		0.48	129	P 2	TWD	20	VH1	+0.75	TEH	TEC			4	COLD	600UL
119	79	0.12	28	P 2	TWD	5	DBH	+0.15	TEH	TEC	NEW		8	COLD	600UL
119	87	0.28	115	P 2	TWD	12	DBH	+0.55	TEH	TEC			8	COLD	600UL
		0.22	53	P 2	TWD	10	DBH	+0.55	TEH	TEC			8	COLD	600UL
119	91	0.41	57	P 2	TWD	16	DBH	+1.78	TEH	TEC			13	COLD	600UL
		0.43	48	P 2	TWD	17	DBH	+1.78	TEH	TEC			13	COLD	600UL
120	42	0.19	74	P 2	TWD	9	DBC	+1.66	TEH	TEC			4	COLD	600UL
		0.19	74	P 2	TWD	9	DBC	+1.66	TEH	TEC			4	COLD	600UL
120	44	0.19	161	P 2	TWD	9	VH1	-0.70	TEH	TEC			4	COLD	600UL
		0.19	161	P 2	TWD	9	VH1	-0.70	TEH	TEC			4	COLD	600UL
120	46	0.20	145	P 2	TWD	10	VH2	-0.82	TEH	TEC			4	COLD	600UL
		0.21	157	P 2	TWD	10	VH2	-0.82	TEH	TEC			4	COLD	600UL
120	50	0.25	147	P 2	TWD	12	VH1	-0.56	TEH	TEC			4	COLD	600UL
		0.24	148	P 2	TWD	11	VH1	-0.56	TEH	TEC			4	COLD	600UL

MAI, MCI, MMI, MVI, SAI, SCI, SVI, 0-100%TWD

QUERY: rpc_icodes_and_0-100%twd.qry

ROW	LINE	VOLTS	DEG	CHN	IND	%TW	LOCATION		EXT	EXT	UTIL 1	UTIL 2	CAL #	LEG	PROBE
120	54	0.22	145	P 2	TWD	10	VH2	-0.77	TEH	TEC			4	COLD	600UL
		0.22	145	P 2	TWD	10	VH2	-0.77	TEH	TEC			4	COLD	600UL
120	56	0.49	131	P 2	TWD	18	10H	+1.25	TEH	TEC			5	COLD	600UL
		0.49	130	P 2	TWD	18	10H	+1.25	TEH	TEC			5	COLD	600UL
120	64	0.29	48	P 2	TWD	11	10C	-0.13	TEH	TEC	NEW		5	COLD	600UL
120	76	0.31	158	P 2	TWD	14	VH1	-0.69	TEH	TEC			8	COLD	600UL
		0.30	161	P 2	TWD	13	VH2	-0.73	TEH	TEC			8	COLD	600UL
		0.26	111	P 2	TWD	12	VH2	+0.84	TEH	TEC			8	COLD	600UL
		0.34	154	P 2	TWD	15	VH1	-0.69	TEH	TEC			8	COLD	600UL
		0.33	159	P 2	TWD	14	VH2	-0.73	TEH	TEC			8	COLD	600UL
		0.30	92	P 2	TWD	13	VH2	+0.84	TEH	TEC			8	COLD	600UL
120	80	0.39	84	P 2	TWD	15	VH1	-0.69	TEH	TEC	NEW		7	COLD	600UL
120	82	0.24	76	P 2	TWD	10	VH1	-0.71	TEH	TEC			7	COLD	600UL
		0.26	82	P 2	TWD	11	VH1	-0.71	TEH	TEC			7	COLD	600UL
120	84	0.43	85	P 2	TWD	16	VH1	-0.60	TEH	TEC			7	COLD	600UL
		0.34	148	P 2	TWD	13	VH2	-0.86	TEH	TEC			7	COLD	600UL
		0.46	89	P 2	TWD	18	VH1	-0.60	TEH	TEC			7	COLD	600UL
		0.30	154	P 2	TWD	13	VH2	-0.86	TEH	TEC			7	COLD	600UL
120	114	0.31	104	P 2	TWD	11	DBH	+0.49	TEH	TEC			15	COLD	600UL
		0.31	107	P 2	TWD	13	DBH	+0.49	TEH	TEC			15	COLD	600UL
120	120	0.39	138	P 2	TWD	16	10H	-1.60	TEH	TEC	LOCOK		18	COLD	600UL
		0.39	138	P 2	TWD	16	10H	-1.60	TEH	TEC			18	COLD	600UL
120	124	0.42	89	P 2	TWD	15	10H	+1.50	TEH	TEC	LOCOK		17	COLD	600UL
		0.42	89	P 2	TWD	15	10H	+1.50	TEH	TEC			17	COLD	600UL
121	59	0.17	9	P 2	TWD	7	DBC	-1.16	TEH	TEC	NEW		5	COLD	600UL
121	65	0.41	58	P 2	TWD	15	VH1	+0.82	TEH	TEC			5	COLD	600UL
		0.35	33	P 2	TWD	13	VH1	+0.82	TEH	TEC			5	COLD	600UL
121	77	0.18	130	P 2	TWD	8	DBC	-1.05	TEH	TEC	NEW		7	COLD	600UL
121	81	0.46	72	P 2	TWD	17	VH1	+0.69	TEH	TEC			7	COLD	600UL
		0.45	84	P 2	TWD	17	VH1	+0.69	TEH	TEC			7	COLD	600UL
121	89	0.20	83	P 2	TWD	9	DBH	-1.12	TEH	TEC			14	COLD	600UL
		0.11	158	P 2	TWD	5	DBH	+0.24	TEH	TEC			14	COLD	600UL
		0.09	17	P 2	TWD	4	DBH	+0.32	TEH	TEC			14	COLD	600UL
		0.18	79	P 2	TWD	9	DBH	-1.12	TEH	TEC			14	COLD	600UL
		0.11	14	P 2	TWD	5	DBH	+0.32	TEH	TEC			14	COLD	600UL
		0.11	158	P 2	TWD	5	DBH	+0.24	TEH	TEC			14	COLD	600UL
121	91	0.13	80	P 2	TWD	6	DBH	+2.06	TEH	TEC	NEW		14	COLD	600UL
122	48	0.28	63	P 2	TWD	11	VH1	+0.57	TEH	TEC			3	COLD	600UL
		0.28	63	P 2	TWD	12	VH1	+0.57	TEH	TEC			3	COLD	600UL
122	52	0.35	98	P 2	TWD	14	VH1	+0.75	TEH	TEC			3	COLD	600UL
		0.35	98	P 2	TWD	14	VH1	+0.75	TEH	TEC			3	COLD	600UL
122	70	0.31	147	P 2	TWD	14	VH2	-0.75	TEH	TEC			6	COLD	600UL
		0.28	66	P 2	TWD	13	VH2	+0.75	TEH	TEC			6	COLD	600UL
		0.31	147	P 2	TWD	14	VH2	-0.75	TEH	TEC			6	COLD	600UL
		0.28	66	P 2	TWD	13	VH2	+0.75	TEH	TEC			6	COLD	600UL
122	80	0.29	161	P 2	TWD	13	VH1	-0.84	TEH	TEC			8	COLD	600UL
		0.30	152	P 2	TWD	13	VH2	-0.93	TEH	TEC			8	COLD	600UL
		0.35	98	P 2	TWD	15	VH2	-0.93	TEH	TEC			8	COLD	600UL
		0.29	152	P 2	TWD	13	VH1	-0.84	TEH	TEC			8	COLD	600UL
122	86	0.43	90	P 2	TWD	18	DBH	+2.00	TEH	TEC			8	COLD	600UL
		0.43	90	P 2	TWD	18	DBH	+2.00	TEH	TEC			8	COLD	600UL
122	110	0.26	140	P 2	TWD	13	VH1	-0.62	TEH	TEC			16	COLD	600UL
		0.35	146	P 2	TWD	16	VH1	-0.62	TEH	TEC			16	COLD	600UL

MAI, MCI, MMI, MVI, SAI, SCI, SVI, 0-100%TWD

QUERY: rpc_icodes_and_0-100%twd.qry

ROW	LINE	VOLTS	DEG	CHN	IND	%TW	LOCATION		EXT	EXT	UTIL 1	UTIL 2	CAL #	LEG	PROBE
122	114	0.30	118	P 2	TWD	14	VH1	+0.47	TEH	TEC			16	COLD	600UL
		0.30	118	P 2	TWD	14	VH1	+0.47	TEH	TEC			16	COLD	600UL
122	118	0.40	102	P 2	TWD	17	VH2	-0.88	TEH	TEC	NEW		18	COLD	600UL
123	41	0.25	103	P 2	TWD	12	06H	-1.14	TEH	TEC			2	COLD	600UL
123	43	0.29	143	P 2	TWD	12	08C	+0.82	TEH	TEC			3	COLD	600UL
		0.28	127	P 2	TWD	12	08C	+0.82	TEH	TEC			3	COLD	600UL
123	49	0.28	91	P 2	TWD	11	VH1	-0.84	TEH	TEC			3	COLD	600UL
		0.23	147	P 2	TWD	10	VH1	-0.84	TEH	TEC			3	COLD	600UL
123	59	0.26	124	P 2	TWD	12	VH1	+0.67	TEH	TEC			6	COLD	600UL
		0.26	124	P 2	TWD	12	VH1	+0.67	TEH	TEC			6	COLD	600UL
123	95	0.63	93	P 2	TWD	23	VH1	+0.90	TEH	TEC			13	COLD	600UL
		0.60	71	P 2	TWD	22	VH1	+0.90	TEH	TEC			13	COLD	600UL
123	97	0.31	10	P 2	TWD	13	DBH	+1.36	TEH	TEC			13	COLD	600UL
		0.31	10	P 2	TWD	13	DBH	+1.36	TEH	TEC			13	COLD	600UL
124	42	0.19	104	P 2	TWD	9	04C	+0.85	TEH	TEC			4	COLD	600UL
124	54	0.23	135	P 2	TWD	10	VH1	-0.86	TEH	TEC			3	COLD	600UL
		0.27	113	P 2	TWD	11	10H	+0.69	TEH	TEC	NEW		3	COLD	600UL
		0.23	136	P 2	TWD	10	VH1	-0.86	TEH	TEC			3	COLD	600UL
124	56	0.17	117	P 2	TWD	6	DBH	+1.69	TEH	TEC	NEW		5	COLD	600UL
124	64	0.32	51	P 2	TWD	12	VH1	+0.92	TSH	TEC	NEW		5	COLD	600UL
124	76	0.38	147	P 2	TWD	16	VH2	-0.73	TEH	TEC			8	COLD	600UL
		0.28	121	P 2	TWD	12	DBH	+1.72	TEH	TEC	NEW		8	COLD	600UL
		0.44	146	P 2	TWD	18	VH2	-0.73	TEH	TEC			8	COLD	600UL
124	84	0.29	125	P 2	TWD	13	VH1	-0.78	TEH	TEC			8	COLD	600UL
		0.30	55	P 2	TWD	13	VH2	-0.93	TEH	TEC			8	COLD	600UL
		0.36	86	P 2	TWD	16	VH2	-0.93	TEH	TEC			8	COLD	600UL
		0.38	89	P 2	TWD	16	VH1	-0.78	TEH	TEC			8	COLD	600UL
124	86	0.19	101	P 2	TWD	8	DBH	+1.39	TEH	TEC	NEW		7	COLD	600UL
		0.37	14	P 2	TWD	15	DBH	-0.11	TEH	TEC	NEW		7	COLD	600UL
124	96	0.55	45	P 2	TWD	20	DBH	+1.77	TEH	TEC			13	COLD	600UL
		0.19	21	P 2	TWD	8	DBH	+0.47	TEH	TEC			13	COLD	600UL
		0.24	30	P 2	TWD	10	DBH	+0.53	TEH	TEC			13	COLD	600UL
		0.57	43	P 2	TWD	21	DBH	+1.77	TEH	TEC			13	COLD	600UL
		0.19	21	P 2	TWD	8	DBH	+0.47	TEH	TEC			13	COLD	600UL
		0.19	71	P 2	TWD	10	DBH	+0.53	TEH	TEC			13	COLD	600UL
124	110	0.77	116	P 2	TWD	23	VH1	-0.11	TEH	TEC			15	COLD	600UL
		0.76	124	P 2	TWD	24	VH1	-0.11	TEH	TEC			15	COLD	600UL
124	112	0.97	119	P 2	TWD	26	VH1	+0.60	TEH	TEC			15	COLD	600UL
		0.81	106	P 2	TWD	25	VH1	+0.60	TEH	TEC			15	COLD	600UL
124	116	0.88	149	P 2	TWD	25	VH1	-0.60	TEH	TEC			15	COLD	600UL
		0.89	150	P 2	TWD	27	VH1	-0.60	TEH	TEC			15	COLD	600UL
124	134	0.16	71	P 2	TWD	8	DBH	+1.93	TEH	TEC	NEW		20	COLD	600UL
125	49	0.30	114	P 2	TWD	14	08C	+0.79	TEH	TEC			4	COLD	600UL
		0.31	107	P 2	TWD	14	08C	+0.79	TEH	TEC			4	COLD	600UL
125	67	0.36	56	P 2	TWD	14	VH1	+0.96	TEH	TEC			5	COLD	600UL
		0.37	55	P 2	TWD	14	VH1	+0.96	TEH	TEC			5	COLD	600UL
125	93	0.58	43	P 2	TWD	21	DBH	+1.80	TEH	TEC			13	COLD	600UL
		0.58	43	P 2	TWD	21	DBH	+1.80	TEH	TEC			13	COLD	600UL
125	97	0.30	49	P 2	TWD	14	DBH	+1.72	TEH	TEC	NEW		14	COLD	600UL
125	99	0.36	31	P 2	TWD	15	DBH	+0.72	TEH	TEC			13	COLD	600UL

MAI, MCI, MMI, MVI, SAI, SCI, SVI, 0-100%TWD

QUERY: rpc_icodes_and_0-100%twd.qry

ROW	LINE	VOLTS	DEG	CHN	IND	%TW	LOCATION		EXT	EXT	UTIL 1	UTIL 2	CAL #	LEG	PROBE
		0.39	40	P 2	TWD	16	DBH	+1.71	TEH	TEC			13	COLD	600UL
		0.36	31	P 2	TWD	15	DBH	+0.72	TEH	TEC			13	COLD	600UL
		0.40	42	P 2	TWD	16	DBH	+1.71	TEH	TEC			13	COLD	600UL
125	115	0.39	134	P 2	TWD	17	VH1	+0.58	TEH	TEC			16	COLD	600UL
		0.40	131	P 2	TWD	18	VH1	+0.58	TEH	TEC			16	COLD	600UL
125	131	0.17	158	P 2	TWD	8	DBH	+1.98	TEH	TEC	NEW		20	COLD	600UL
126	52	0.38	149	P 2	TWD	15	VH1	+0.84	TEH	TEC			3	COLD	600UL
		0.38	149	P 2	TWD	15	VH1	+0.84	TEH	TEC			3	COLD	600UL
126	56	0.23	44	P 2	TWD	9	VH1	-0.81	TEH	TEC			5	COLD	600UL
		0.24	44	P 2	TWD	9	VH1	-0.81	TEH	TEC			5	COLD	600UL
126	60	0.66	126	P 2	TWD	22	VH1	-0.96	TEH	TEC			5	COLD	600UL
		0.66	126	P 2	TWD	22	VH1	-0.96	TEH	TEC			5	COLD	600UL
126	62	0.21	137	P 2	TWD	10	VH1	+0.02	TEH	TEC			6	COLD	600UL
		0.28	124	P 2	TWD	13	VH1	-0.80	TEH	TEC			6	COLD	600UL
		0.28	126	P 2	TWD	13	VH1	-0.80	TEH	TEC			6	COLD	600UL
		0.21	137	P 2	TWD	10	VH1	+0.02	TEH	TEC			6	COLD	600UL
126	66	0.49	132	P 2	TWD	20	VH1	-0.41	TEH	TEC			6	COLD	600UL
		0.25	141	P 2	TWD	12	VH1	+0.66	TEH	TEC			6	COLD	600UL
		0.44	108	P 2	TWD	19	VH1	-0.41	TEH	TEC			6	COLD	600UL
		0.25	141	P 2	TWD	12	VH1	+0.66	TEH	TEC			6	COLD	600UL
126	80	0.35	119	P 2	TWD	15	VH1	-0.74	TEH	TEC			8	COLD	600UL
		0.35	119	P 2	TWD	15	VH1	-0.74	TEH	TEC			8	COLD	600UL
126	96	0.30	102	P 2	TWD	14	VH1	-0.67	TEH	TEC			14	COLD	600UL
		0.30	102	P 2	TWD	14	VH1	-0.67	TEH	TEC			14	COLD	600UL
126	100	0.34	100	P 2	TWD	15	VH1	-0.71	TEH	TEC			14	COLD	600UL
		0.34	100	P 2	TWD	15	VH1	-0.71	TEH	TEC			14	COLD	600UL
126	104	0.37	150	P 2	TWD	17	VH1	-0.56	TEH	TEC			16	COLD	600UL
		0.37	150	P 2	TWD	17	VH1	-0.56	TEH	TEC			16	COLD	600UL
126	106	0.53	131	P 2	TWD	21	VH1	-0.36	TEH	TEC			16	COLD	600UL
		0.53	131	P 2	TWD	22	VH1	-0.36	TEH	TEC			16	COLD	600UL
126	108	0.46	141	P 2	TWD	20	VH1	-0.75	TEH	TEC			16	COLD	600UL
		0.25	125	P 2	TWD	12	VH1	+0.17	TEH	TEC			16	COLD	600UL
		0.46	141	P 2	TWD	20	VH1	-0.75	TEH	TEC			16	COLD	600UL
		0.25	124	P 2	TWD	12	VH1	+0.17	TEH	TEC			16	COLD	600UL
126	110	0.95	133	P 2	TWD	31	VH1	+0.58	TEH	TEC			16	COLD	600UL
		0.96	132	P 2	TWD	31	VH1	+0.58	TEH	TEC			16	COLD	600UL
126	114	0.39	119	P 2	TWD	17	VH1	+0.71	TEH	TEC			16	COLD	600UL
		0.40	116	P 2	TWD	18	VH1	+0.71	TEH	TEC			16	COLD	600UL
126	118	0.29	121	P 2	TWD	13	VH1	+0.75	TEH	TEC			18	COLD	600UL
		0.33	148	P 2	TWD	14	VH1	+0.75	TEH	TEC			18	COLD	600UL
127	55	0.26	60	P 2	TWD	12	VH1	+0.71	TEH	TEC			4	COLD	600UL
		0.26	60	P 2	TWD	12	VH1	+0.71	TEH	TEC			4	COLD	600UL
127	103	0.42	118	P 2	TWD	18	VH1	-0.54	TEH	TEC			16	COLD	600UL
		0.74	98	P 2	TWD	27	VH1	+0.64	TEH	TEC			16	COLD	600UL
		0.43	116	P 2	TWD	19	VH1	-0.54	TEH	TEC			16	COLD	600UL
		0.75	97	P 2	TWD	27	VH1	+0.64	TEH	TEC			16	COLD	600UL
127	111	0.44	146	P 2	TWD	15	VH1	-0.64	TEH	TEC			15	COLD	600UL
		0.44	144	P 2	TWD	17	VH1	-0.64	TEH	TEC			15	COLD	600UL
127	115	0.44	100	P 2	TWD	15	VH1	+0.68	TEH	TEC			15	COLD	600UL
		0.43	94	P 2	TWD	17	VH1	+0.68	TEH	TEC			15	COLD	600UL
127	123	0.30	148	P 2	TWD	11	VH2	-0.84	TEH	TEC			17	COLD	600UL
		0.30	148	P 2	TWD	12	VH2	-0.84	TEH	TEC			17	COLD	600UL
128	46	0.23	125	P 2	TWD	11	02C	+0.77	TEH	TEC			4	COLD	600UL

MAI, MCI, MMI, MVI, SAI, SCI, SVI, 0-100%TWD

QUERY: rpc_icodes_and_0-100%twd.qry

ROW	LINE	VOLTS	DEG	CHN	IND	%TW	LOCATION		EXT	EXT	UTIL 1	UTIL 2	CAL #	LEG	PROBE
128	58	0.39	111	P 2	TWD 17	VH3		+0.90	TEH	TEC			6	COLD	600UL
		0.23	36	P 2	TWD 11	VH3		+0.26	TEH	TEC			6	COLD	600UL
		0.23	143	P 2	TWD 11	VH3		+0.90	TEH	TEC			6	COLD	600UL
		0.23	36	P 2	TWD 11	VH3		+0.26	TEH	TEC			6	COLD	600UL
128	70	0.35	71	P 2	TWD 13	VH1		-0.62	TEH	TEC	NEW		5	COLD	600UL
128	76	0.30	122	P 2	TWD 13	10H		+0.88	TEH	TEC			8	COLD	600UL
		0.30	125	P 2	TWD 13	10H		+0.88	TEH	TEC			8	COLD	600UL
128	78	0.47	122	P 2	TWD 18	VH1		-0.73	TEH	TEC			7	COLD	600UL
		0.51	134	P 2	TWD 19	VH1		-0.73	TEH	TEC			7	COLD	600UL
128	80	0.30	125	P 2	TWD 12	VH1		-0.79	TEH	TEC			7	COLD	600UL
		0.33	141	P 2	TWD 14	VH1		-0.79	TEH	TEC			7	COLD	600UL
128	82	0.32	111	P 2	TWD 13	VH1		-1.00	TEH	TEC			7	COLD	600UL
		0.33	113	P 2	TWD 14	VH1		-1.00	TEH	TEC			7	COLD	600UL
128	84	0.41	56	P 2	TWD 17	VH1		-0.86	TEH	TEC			8	COLD	600UL
		0.29	136	P 2	TWD 13	VH1		+0.82	TEH	TEC			8	COLD	600UL
		0.39	47	P 2	TWD 16	VH1		-0.86	TEH	TEC			8	COLD	600UL
		0.30	141	P 2	TWD 13	VH1		+0.82	TEH	TEC			8	COLD	600UL
128	86	0.41	110	P 2	TWD 16	VH1		-0.88	TEH	TEC			7	COLD	600UL
		0.42	113	P 2	TWD 16	VH1		-0.88	TEH	TEC			7	COLD	600UL
128	100	0.46	122	P 2	TWD 18	VH1		-0.83	TEH	TEC			13	COLD	600UL
		0.46	133	P 2	TWD 18	VH1		-0.83	TEH	TEC			13	COLD	600UL
128	106	0.47	153	P 2	TWD 16	VH1		-0.66	TEH	TEC			15	COLD	600UL
		0.49	152	P 2	TWD 18	VH1		-0.66	TEH	TEC			15	COLD	600UL
128	130	0.22	95	P 2	TWD 8	08C		-0.95	TEH	TEC			30	COLD	600UL
		0.22	95	P 2	TWD 8	08C		-0.95	TEH	TEC			30	COLD	600UL
129	75	0.31	116	P 2	TWD 12	VH1		+0.68	TEH	TEC			7	COLD	600UL
		0.36	107	P 2	TWD 14	VH1		+0.68	TEH	TEC			7	COLD	600UL
129	99	0.62	62	P 2	TWD 22	10H		-0.26	TEH	TEC			13	COLD	600UL
		0.62	62	P 2	TWD 22	10H		-0.26	TEH	TEC			13	COLD	600UL
129	129	0.38	137	P 2	TWD 16	DBH		+2.02	TEH	TEC	NEW		18	COLD	600UL
130	54	0.30	117	P 2	TWD 12	DBH		-1.89	TEH	TEC	NEW		3	COLD	600UL
130	56	0.14	54	P 2	TWD 5	DBH		-2.25	TEH	TEC	NEW		5	COLD	600UL
130	72	0.27	136	P 2	TWD 10	VH1		-0.84	TEH	TEC			5	COLD	600UL
		0.27	136	P 2	TWD 10	VH1		-0.84	TEH	TEC			5	COLD	600UL
130	74	0.46	105	P 2	TWD 17	VH1		-0.75	TEH	TEC			7	COLD	600UL
		0.48	106	P 2	TWD 18	VH1		-0.75	TEH	TEC			7	COLD	600UL
130	76	0.43	102	P 2	TWD 16	VH1		+0.60	TEH	TEC			7	COLD	600UL
		0.43	102	P 2	TWD 17	VH1		+0.60	TEH	TEC			7	COLD	600UL
130	78	0.29	86	P 2	TWD 12	VH1		-0.81	TEH	TEC			7	COLD	600UL
		0.32	118	P 2	TWD 13	VH1		-0.81	TEH	TEC			7	COLD	600UL
130	84	0.49	63	P 2	TWD 18	VH1		-0.79	TEH	TEC			7	COLD	600UL
		0.49	63	P 2	TWD 18	VH1		-0.79	TEH	TEC			7	COLD	600UL
130	88	0.31	96	P 2	TWD 14	VH1		+0.09	TEH	TEC			14	COLD	600UL
		0.15	160	P 2	TWD 7	VH1		+0.47	TEH	TEC			14	COLD	600UL
		0.15	160	P 2	TWD 7	VH1		+0.47	TEH	TEC			14	COLD	600UL
		0.31	96	P 2	TWD 14	VH1		+0.09	TEH	TEC			14	COLD	600UL
130	106	0.44	140	P 2	TWD 19	VH1		-0.69	TEH	TEC			16	COLD	600UL
		0.31	108	P 2	TWD 14	VH1		-0.09	TEH	TEC			16	COLD	600UL
		0.45	139	P 2	TWD 20	VH1		-0.69	TEH	TEC			16	COLD	600UL
		0.31	107	P 2	TWD 15	VH1		-0.09	TEH	TEC			16	COLD	600UL
131	51	0.11	48	P 2	TWD 3	VH2		+0.32	TEH	TEC			9	COLD	600UL

MAI, MCI, MMI, MVI, SAI, SCI, SVI, 0-100%TWD

QUERY: rpc_icodes_and_0-100%twd qry

ROW	LINE	VOLTS	DEG	CHN	IND	%TW	LOCATION		EXT	EXT	UTIL 1	UTIL 2	CAL #	LEG	PROBE
		0.55	127	P 2	TWD	19	VH2	+0.81	TEH	TEC			9	COLD	600UL
		0.66	96	P 2	TWD	22	DBC	+2.00	TEH	TEC			9	COLD	600UL
		0.55	127	P 2	TWD	19	VH2	+0.81	TEH	TEC			9	COLD	600UL
		0.64	101	P 2	TWD	21	DBC	+2.00	TEH	TEC			9	COLD	600UL
		0.11	48	P 2	TWD	3	VH2	+0.32	TEH	TEC			9	COLD	600UL
131	57	0.25	120	P 2	TWD	9	DBH	+1.69	TEH	TEC	NEW		9	COLD	600UL
131	83	0.36	74	P 2	TWD	14	VH1	-0.77	TEH	TEC			10	COLD	600UL
		0.36	82	P 2	TWD	15	VH1	-0.77	TEH	TEC			10	COLD	600UL
131	89	0.19	111	P 2	TWD	9	VH1	-1.00	TEH	TEC			11	COLD	600UL
		0.19	111	P 2	TWD	9	VH1	-1.00	TEH	TEC			11	COLD	600UL
131	97	0.30	93	P 2	TWD	13	VH1	+0.96	TEH	TEC			11	COLD	600UL
		0.39	142	P 2	TWD	16	10H	-1.09	TEH	TEC			11	COLD	600UL
		0.08	15	P 2	TWD	4	VH1	-0.98	TEH	TEC			11	COLD	600UL
		0.30	93	P 2	TWD	13	VH1	+0.96	TEH	TEC			11	COLD	600UL
		0.39	142	P 2	TWD	16	10H	-1.09	TEH	TEC			11	COLD	600UL
		0.08	9	P 2	TWD	4	VH1	-0.98	TEH	TEC			11	COLD	600UL
131	99	0.30	47	P 2	TWD	12	10H	-1.09	TEH	TEC			11	COLD	600UL
		0.35	129	P 2	TWD	15	10H	-1.09	TEH	TEC			11	COLD	600UL
131	103	0.93	54	P 2	TWD	29	VC3	-0.69	TEH	TEC			11	COLD	600UL
		0.93	54	P 2	TWD	29	VC3	-0.69	TEH	TEC			11	COLD	600UL
132	68	0.29	78	P 2	TWD	11	VH2	-0 77	TEH	TEC			9	COLD	600UL
		0.28	62	P 2	TWD	11	VH2	-0.77	TEH	TEC			9	COLD	600UL
132	70	0.27	85	P 2	TWD	10	VH1	+0.19	TEH	TEC			9	COLD	600UL
		0.70	85	P 2	TWD	23	VH1	+0.66	TEH	TEC			9	COLD	600UL
		0.71	87	P 2	TWD	23	VH1	+0.66	TEH	TEC			9	COLD	600UL
		0.25	87	P 2	TWD	10	VH1	+0.19	TEH	TEC			9	COLD	600UL
132	76	0.30	104	P 2	TWD	13	VH2	-0.90	TEH	TEC			10	COLD	600UL
		0.26	97	P 2	TWD	11	VH2	-0.90	TEH	TEC			10	COLD	600UL
132	78	0.33	78	P 2	TWD	13	VH1	-0.73	TEH	TEC			10	COLD	600UL
		0.28	121	P 2	TWD	12	VH1	-0.73	TEH	TEC			10	COLD	600UL
132	82	0.33	67	P 2	TWD	14	VH1	-0.69	TEH	TEC			10	COLD	600UL
		0.29	138	P 2	TWD	12	VH2	-0.82	TEH	TEC			10	COLD	600UL
		0.30	55	P 2	TWD	12	VH1	-0.69	TEH	TEC			10	COLD	600UL
		0.28	137	P 2	TWD	12	VH2	-0.82	TEH	TEC			10	COLD	600UL
132	84	0.28	141	P 2	TWD	12	VH1	-0.70	TEH	TEC			10	COLD	600UL
		0.28	141	P 2	TWD	12	VH1	-0.70	TEH	TEC			10	COLD	600UL
132	92	0.24	61	P 2	TWD	11	VH2	-0.83	TEH	TEC			11	COLD	600UL
		0.35	64	P 2	TWD	15	VH1	-0.88	TEH	TEC			11	COLD	600UL
		0.35	64	P 2	TWD	15	VH1	-0.88	TEH	TEC			11	COLD	600UL
		0.25	74	P 2	TWD	11	VH2	-0.83	TEH	TEC			11	COLD	600UL
132	96	0.40	67	P 2	TWD	16	VH1	-0.75	TEH	TEC			11	COLD	600UL
		0.15	88	P 2	TWD	7	VH1	+0.49	TEH	TEC			11	COLD	600UL
		0.41	72	P 2	TWD	17	VH1	-0.75	TEH	TEC			11	COLD	600UL
		0.16	126	P 2	TWD	8	VH1	+0.49	TEH	TEC			11	COLD	600UL
132	100	0.51	119	P 2	TWD	20	VH1	-0.86	TEH	TEC			11	COLD	600UL
		0.51	119	P 2	TWD	20	VH1	-0.86	TEH	TEC			11	COLD	600UL
132	118	0.15	76	P 2	TWD	7	DBH	+1.94	TEH	TEC	NEW		11	COLD	600UL
133	51	0.21	71	P 2	TWD	9	08C	+0.83	TEH	TEC			10	COLD	600UL
		0.21	71	P 2	TWD	9	08C	+0.83	TEH	TEC			10	COLD	600UL
133	75	0.47	46	P 2	TWD	17	10H	+0.79	TEH	TEC			9	COLD	600UL
		0.47	46	P 2	TWD	17	10H	+0.79	TEH	TEC			9	COLD	600UL
133	87	0.93	118	P 2	TWD	28	VH1	-0.62	TEH	TEC			10	COLD	600UL
		0.93	118	P 2	TWD	28	VH1	-0.62	TEH	TEC			10	COLD	600UL
133	91	0.23	94	P 2	TWD	11	VH1	-0.81	TEH	TEC			12	COLD	600UL
		0.22	52	P 2	TWD	10	VH1	-0.81	TEH	TEC			12	COLD	600UL

MAI, MCI, MMI, MVI, SAI, SCI, SVI, 0-100%TWD

QUERY: rpc_icodes_and_0-100%twd.qry

ROW	LINE	VOLTS	DEG	CHN	IND	%TW	LOCATION		EXT	EXT	UTIL 1	UTIL 2	CAL #	LEG	PROBE
133	101	0.39	149	P 2	TWD 17	VH1		-0.92	TEH	TEC			12	COLD	600UL
		0.40	148	P 2	TWD 17	VH1		-0.92	TEH	TEC			12	COLD	600UL
134	58	0.31	152	P 2	TWD 13	VC2		-0.81	TEH	TEC			10	COLD	600UL
		0.35	108	P 2	TWD 14	VC1		-0.81	TEH	TEC			10	COLD	600UL
		0.35	106	P 2	TWD 14	VC1		-0.81	TEH	TEC			10	COLD	600UL
		0.31	152	P 2	TWD 13	VC2		-0.81	TEH	TEC			10	COLD	600UL
134	60	0.43	105	P 2	TWD 16	DBH		+1.78	TEH	TEC			10	COLD	600UL
		0.43	106	P 2	TWD 17	DBH		+1.78	TEH	TEC			10	COLD	600UL
134	64	0.33	158	P 2	TWD 14	VH2		-0.75	TEH	TEC			10	COLD	600UL
		0.33	158	P 2	TWD 13	VH2		-0.75	TEH	TEC			10	COLD	600UL
134	66	0.28	153	P 2	TWD 12	VH1		-0.83	TEH	TEC			10	COLD	600UL
		0.33	154	P 2	TWD 14	VH2		-0.92	TEH	TEC			10	COLD	600UL
		0.28	153	P 2	TWD 12	VH1		-0.83	TEH	TEC			10	COLD	600UL
		0.33	154	P 2	TWD 14	VH2		-0.92	TEH	TEC			10	COLD	600UL
134	68	0.34	139	P 2	TWD 14	VH2		-0.79	TEH	TEC			10	COLD	600UL
		0.34	139	P 2	TWD 14	VH2		-0.79	TEH	TEC			10	COLD	600UL
134	74	0.42	107	P 2	TWD 17	VH1		-0.75	TEH	TEC			10	COLD	600UL
		0.39	92	P 2	TWD 15	VH1		-0.75	TEH	TEC			10	COLD	600UL
134	84	0.68	142	P 2	TWD 22	VH1		-0.71	TEH	TEC			9	COLD	600UL
		0.68	142	P 2	TWD 22	VH1		-0.71	TEH	TEC			9	COLD	600UL
134	88	0.65	122	P 2	TWD 23	VH1		-0.77	TEH	TEC			11	COLD	600UL
		0.65	122	P 2	TWD 23	VH1		-0.77	TEH	TEC			11	COLD	600UL
134	90	0.19	141	P 2	TWD 9	VH1		+0.81	TEH	TEC			11	COLD	600UL
		0.19	141	P 2	TWD 9	VH1		+0.81	TEH	TEC			11	COLD	600UL
134	94	0.35	134	P 2	TWD 15	VH1		-0.94	TEH	TEC			12	COLD	600UL
		0.26	76	P 2	TWD 12	VH1		+0.83	TEH	TEC			12	COLD	600UL
		0.35	122	P 2	TWD 16	VH1		-0.94	TEH	TEC			12	COLD	600UL
		0.25	67	P 2	TWD 12	VH1		+0.83	TEH	TEC			12	COLD	600UL
134	96	0.41	137	P 2	TWD 17	VH1		-0.88	TEH	TEC			12	COLD	600UL
		0.38	137	P 2	TWD 17	VH1		-0.88	TEH	TEC			12	COLD	600UL
134	100	0.29	145	P 2	TWD 13	VH1		-0.86	TEH	TEC			12	COLD	600UL
		0.29	145	P 2	TWD 13	VH1		-0.86	TEH	TEC			12	COLD	600UL
134	102	0.38	144	P 2	TWD 16	VH2		+0.86	TEH	TEC			11	COLD	600UL
		0.38	144	P 2	TWD 16	VH2		+0.86	TEH	TEC			11	COLD	600UL
134	110	0.60	146	P 2	TWD 22	VH1		-0.73	TEH	TEC			12	COLD	600UL
		0.60	145	P 2	TWD 23	VH1		-0.73	TEH	TEC			12	COLD	600UL
135	57	0.28	8	P 2	TWD 12	DBH		+1.75	TEH	TEC	NEW		10	COLD	600UL
135	97	0.50	91	P 2	TWD 19	VH1		-0.98	TEH	TEC			11	COLD	600UL
		0.50	91	P 2	TWD 19	VH1		-0.98	TEH	TEC			11	COLD	600UL
136	60	0.41	124	P 2	TWD 15	VC3		-0.71	TEH	TEC			9	COLD	600UL
		0.44	113	P 2	TWD 16	DBH		+1.77	TEH	TEC	NEW		9	COLD	600UL
		0.31	62	P 2	TWD 12	VC3		-0.71	TEH	TEC			9	COLD	600UL
136	70	0.67	32	P 2	TWD 22	VH1		+1.07	TEH	TEC			9	COLD	600UL
		0.66	33	P 2	TWD 22	VH1		+1.07	TEH	TEC			9	COLD	600UL
136	76	0.46	137	P 2	TWD 18	VH1		+0.64	TEH	TEC			10	COLD	600UL
		0.47	135	P 2	TWD 18	VH1		+0.64	TEH	TEC			10	COLD	600UL
136	78	0.43	128	P 2	TWD 16	VH1		-0.75	TEH	TEC			10	COLD	600UL
		0.43	128	P 2	TWD 16	VH1		-0.75	TEH	TEC			10	COLD	600UL
136	82	0.32	160	P 2	TWD 13	VH1		-0.62	TEH	TEC			10	COLD	600UL
		0.31	160	P 2	TWD 13	VH1		-0.62	TEH	TEC			10	COLD	600UL
136	84	0.47	41	P 2	TWD 18	VH1		-0.47	TEH	TEC			10	COLD	600UL
		0.50	99	P 2	TWD 19	VH1		+0.80	TEH	TEC			10	COLD	600UL

MAI, MCI, MMI, MVI, SAI, SCI, SVI, 0-100%TWD

QUERY: rpc_icodes_and_0-100%twd.qry

ROW	LINE	VOLTS	DEG	CHN	IND	%TW	LOCATION		EXT	EXT	UTIL 1	UTIL 2	CAL #	LEG	PROBE
		0.47	41	P 2	TWD	18	VH1	-0.47	TEH	TEC			10	COLD	600UL
		0.50	99	P 2	TWD	18	VH1	+0.80	TEH	TEC			10	COLD	600UL
136	92	0.35	128	P 2	TWD	15	VH1	-0.77	TEH	TEC			11	COLD	600UL
		0.38	140	P 2	TWD	16	VH1	-0.77	TEH	TEC			11	COLD	600UL
136	100	0.37	128	P 2	TWD	15	VH2	-0.92	TEH	TEC			11	COLD	600UL
		0.37	128	P 2	TWD	15	VH2	-0.92	TEH	TEC			11	COLD	600UL
136	106	0.53	71	P 2	TWD	20	VH2	-1.20	TEH	TEC			11	COLD	600UL
		0.55	23	P 2	TWD	21	VH2	-1.20	TEH	TEC			11	COLD	600UL
136	108	0.50	104	P 2	TWD	19	VH1	-0.94	TEH	TEC			11	COLD	600UL
		0.27	69	P 2	TWD	12	VH1	+0.77	TEH	TEC			11	COLD	600UL
		0.50	104	P 2	TWD	19	VH1	-0.94	TEH	TEC			11	COLD	600UL
		0.27	69	P 2	TWD	12	VH1	+0.77	TEH	TEC			11	COLD	600UL
136	118	0.31	19	P 2	TWD	14	DBH	+1.96	TEH	TEC	NEW		12	COLD	600UL
137	59	0.48	134	P 2	TWD	18	DBC	+1.71	TEH	TEC			10	COLD	600UL
		0.47	129	P 2	TWD	18	DBC	+1.71	TEH	TEC			10	COLD	600UL
137	69	0.47	129	P 2	TWD	18	VH1	-0.94	TEH	TEC			10	COLD	600UL
		0.23	129	P 2	TWD	10	VH1	+1.00	TEH	TEC			10	COLD	600UL
		0.36	124	P 2	TWD	14	VH1	-0.94	TEH	TEC			10	COLD	600UL
		0.23	116	P 2	TWD	10	VH1	+1.00	TEH	TEC			10	COLD	600UL
137	85	0.29	102	P 2	TWD	11	09H	+0.88	TEH	TEC			9	COLD	600UL
		0.11	151	P 2	TWD	3	09H	-1.05	TEH	TEC			9	COLD	600UL
		0.30	107	P 2	TWD	12	09H	+0.88	TEH	TEC			9	COLD	600UL
		0.11	151	P 2	TWD	3	09H	-1.05	TEH	TEC			9	COLD	600UL
137	89	0.38	125	P 2	TWD	16	VH1	+0.79	TEH	TEC			12	COLD	600UL
		0.20	128	P 2	TWD	9	VH1	-0.88	TEH	TEC			12	COLD	600UL
		0.23	110	P 2	TWD	10	VH1	-0.88	TEH	TEC			12	COLD	600UL
		0.38	125	P 2	TWD	16	VH1	+0.79	TEH	TEC			12	COLD	600UL
137	93	0.34	84	P 2	TWD	14	VH1	-0.92	TEH	TEC			12	COLD	600UL
		0.34	84	P 2	TWD	14	VH1	-0.92	TEH	TEC			12	COLD	600UL
137	103	0.58	39	P 2	TWD	21	VH1	-0.81	TEH	TEC			11	COLD	600UL
		0.58	40	P 2	TWD	21	VH1	-0.81	TEH	TEC			11	COLD	600UL
138	64	0.25	141	P 2	TWD	11	VH2	-0.75	TEH	TEC			10	COLD	600UL
		0.25	138	P 2	TWD	10	VH2	-0.75	TEH	TEC			10	COLD	600UL
138	68	0.12	50	P 2	TWD	5	DBH	+1.82	TEH	TEC	NEW		10	COLD	600UL
138	70	0.16	35	P 2	TWD	7	DBH	+1.86	TEH	TEC	NEW		10	COLD	600UL
138	72	0.29	126	P 2	TWD	11	VH2	-0.83	TEH	TEC			9	COLD	600UL
		0.29	126	P 2	TWD	11	VH2	-0.83	TEH	TEC			9	COLD	600UL
138	74	0.84	120	P 2	TWD	26	VH1	-0.88	TEH	TEC			10	COLD	600UL
		0.34	152	P 2	TWD	14	VH2	-0.86	TEH	TEC			10	COLD	600UL
		0.84	120	P 2	TWD	26	VH1	-0.88	TEH	TEC			10	COLD	600UL
		0.34	152	P 2	TWD	14	VH2	-0.86	TEH	TEC			10	COLD	600UL
138	76	0.44	83	P 2	TWD	16	VH1	-0.26	TEH	TEC			9	COLD	600UL
		0.46	76	P 2	TWD	17	VH2	-0.83	TEH	TEC			9	COLD	600UL
		0.44	83	P 2	TWD	16	VH1	-0.26	TEH	TEC			9	COLD	600UL
		0.46	76	P 2	TWD	17	VH2	-0.83	TEH	TEC			9	COLD	600UL
138	86	0.44	92	P 2	TWD	16	VH2	-0.84	TEH	TEC			9	COLD	600UL
		0.44	92	P 2	TWD	16	VH2	-0.84	TEH	TEC			9	COLD	600UL
138	88	0.33	60	P 2	TWD	14	VH1	+0.70	TEH	TEC			11	COLD	600UL
		0.88	82	P 2	TWD	28	VH1	-0.73	TEH	TEC			11	COLD	600UL
		0.88	82	P 2	TWD	28	VH1	-0.73	TEH	TEC			11	COLD	600UL
		0.33	60	P 2	TWD	14	VH1	+0.70	TEH	TEC			11	COLD	600UL
138	92	0.32	123	P 2	TWD	14	VH2	-0.84	TEH	TEC			12	COLD	600UL
		0.26	135	P 2	TWD	12	VH1	-0.66	TEH	TEC			12	COLD	600UL
		0.31	128	P 2	TWD	14	VH2	-0.84	TEH	TEC			12	COLD	600UL
		0.26	135	P 2	TWD	12	VH1	-0.66	TEH	TEC			12	COLD	600UL

MAI, MCI, MMI, MVI, SAI, SCI, SVI, 0-100%TWD

QUERY: rpc_icodes_and_0-100%twd.qry

ROW	LINE	VOLTS	DEG	CHN	IND	%TW	LOCATION		EXT	EXT	UTIL 1	UTIL 2	CAL #	LEG	PROBE
138	94	0.30	31	P 2	TWD	13	VH1	+0.85	TEH	TEC			11	COLD	600UL
		0.20	67	P 2	TWD	9	VH2	+0.83	TEH	TEC			11	COLD	600UL
		0.30	31	P 2	TWD	13	VH1	+0.85	TEH	TEC			11	COLD	600UL
		0.20	67	P 2	TWD	9	VH2	+0.83	TEH	TEC			11	COLD	600UL
139	69	0.24	130	P 2	TWD	9	VH1	+0.81	TEH	TEC			9	COLD	600UL
		0.98	73	P 2	TWD	28	VC1	-0.75	TEH	TEC			9	COLD	600UL
		0.24	130	P 2	TWD	9	VH1	+0.81	TEH	TEC			9	COLD	600UL
		0.98	73	P 2	TWD	28	VC1	-0.75	TEH	TEC			9	COLD	600UL
139	93	0.37	120	P 2	TWD	15	VC1	+0.90	TEH	TEC			11	COLD	600UL
		0.37	120	P 2	TWD	15	VC1	+0.90	TEH	TEC			11	COLD	600UL
139	111	0.36	138	P 2	TWD	15	DBH	+2.09	TEH	TEC	NEW		11	COLD	600UL
140	72	0.36	20	P 2	TWD	15	DBH	+1.91	TEH	TEC	NEW		10	COLD	600UL
140	76	0.47	109	P 2	TWD	17	VH1	-0.86	TEH	TEC			9	COLD	600UL
		0.47	109	P 2	TWD	17	VH1	-0.86	TEH	TEC			9	COLD	600UL
140	78	0.24	146	P 2	TWD	10	VH1	-0.96	TEH	TEC			10	COLD	600UL
		0.25	151	P 2	TWD	10	VH1	-0.96	TEH	TEC			10	COLD	600UL
		0.29	149	P 2	TWD	12	VH2	-0.80	TEH	TEC	NEW		10	COLD	600UL
140	80	0.31	49	P 2	TWD	12	DBH	-1.72	TEH	TEC			9	COLD	600UL
		0.77	77	P 2	TWD	24	VH1	-0.79	TEH	TEC			9	COLD	600UL
		0.31	49	P 2	TWD	12	DBH	-1.72	TEH	TEC			9	COLD	600UL
		0.77	81	P 2	TWD	25	VH1	-0.79	TEH	TEC			9	COLD	600UL
140	82	0.22	127	P 2	TWD	10	VH2	-0.83	TEH	TEC			10	COLD	600UL
		0.21	138	P 2	TWD	9	VH1	-0.68	TEH	TEC			10	COLD	600UL
		0.24	136	P 2	TWD	10	VH1	-0.68	TEH	TEC			10	COLD	600UL
		0.25	134	P 2	TWD	10	VH2	-0.83	TEH	TEC			10	COLD	600UL
140	84	0.36	150	P 2	TWD	15	VH2	-0.92	TEH	TEC			10	COLD	600UL
		0.36	150	P 2	TWD	15	VH2	-0.92	TEH	TEC			10	COLD	600UL
140	88	0.36	125	P 2	TWD	15	VH2	-0.83	TEH	TEC			12	COLD	600UL
		0.35	125	P 2	TWD	15	VH2	-0.83	TEH	TEC			12	COLD	600UL
140	92	0.22	59	P 2	TWD	10	VH2	-0.81	TEH	TEC			11	COLD	600UL
		0.28	145	P 2	TWD	12	VH1	-0.71	TEH	TEC			11	COLD	600UL
		0.28	115	P 2	TWD	12	VH1	-0.71	TEH	TEC			11	COLD	600UL
		0.24	83	P 2	TWD	11	VH2	-0.81	TEH	TEC			11	COLD	600UL
140	106	0.31	64	P 2	TWD	14	DBH	+1.90	TEH	TEC	NEW		12	COLD	600UL
141	63	0.36	86	P 2	TWD	15	DBH	-1.35	TEH	TEC			10	COLD	600UL
		0.27	127	P 2	TWD	11	08H	+0.71	TEH	TEC			10	COLD	600UL
		0.36	85	P 2	TWD	14	DBH	-1.35	TEH	TEC			10	COLD	600UL
		0.27	129	P 2	TWD	11	08H	+0.71	TEH	TEC			10	COLD	600UL
141	65	0.52	118	P 2	TWD	19	09H	+0.66	TEH	TEC			10	COLD	600UL
		0.34	147	P 2	TWD	14	VH1	+1.18	TEH	TEC			10	COLD	600UL
		1.01	99	P 2	TWD	29	DBC	+1.59	TEH	TEC			10	COLD	600UL
		0.35	112	P 2	TWD	14	07H	-0.64	TEH	TEC			10	COLD	600UL
		0.35	116	P 2	TWD	14	07H	-0.64	TEH	TEC			10	COLD	600UL
		1.00	91	P 2	TWD	29	DBC	+1.59	TEH	TEC			10	COLD	600UL
		0.51	138	P 2	TWD	19	09H	+0.66	TEH	TEC			10	COLD	600UL
		0.34	147	P 2	TWD	14	VH1	+1.18	TEH	TEC			10	COLD	600UL
141	67	0.22	57	P 2	TWD	10	DBH	+1.87	TEH	TEC			10	COLD	600UL
		0.21	53	P 2	TWD	10	DBH	+1.87	TEH	TEC			10	COLD	600UL
141	69	0.20	63	P 2	TWD	9	DBH	+1.95	TEH	TEC	NEW		10	COLD	600UL
		0.21	47	P 2	TWD	9	DBC	+1.75	TEH	TEC	NEW		10	COLD	600UL
141	71	0.24	22	P 2	TWD	9	DBH	+2.25	TEH	TEC	NEW		9	COLD	600UL
141	83	0.65	85	P 2	TWD	22	VC1	+1.01	TEH	TEC			9	COLD	600UL
		0.65	85	P 2	TWD	22	VC1	+1.01	TEH	TEC			9	COLD	600UL
141	93	0.31	143	P 2	TWD	13	VC1	+0.86	TEH	TEC			12	COLD	600UL
		0.31	143	P 2	TWD	13	VC1	+0.86	TEH	TEC			12	COLD	600UL

MAI, MCI, MMI, MVI, SAI, SCI, SVI, 0-100%TWD

QUERY: rpc_icodes_and_0-100%twd.qry

ROW	LINE	VOLTS	DEG	CHN	IND	%TW	LOCATION		EXT	EXT	UTIL 1	UTIL 2	CAL #	LEG	PROBE
141	97	0.30	100	P 2	TWD	14	VH2	+0.96	TEH	TEC			12	COLD	600UL
		0.33	115	P 2	TWD	14	VH2	+0.96	TEH	TEC			12	COLD	600UL
141	109	0.31	79	P 2	TWD	14	VH2	-0.77	TEH	TEC			12	COLD	600UL
		0.34	78	P 2	TWD	15	VH2	-0.77	TEH	TEC			12	COLD	600UL
141	113	0.36	155	P 2	TWD	15	09C	+0.74	TEH	TEC			12	COLD	600UL
		0.36	155	P 2	TWD	15	09C	+0.74	TEH	TEC			12	COLD	600UL
142	66	0.84	118	P 2	TWD	26	DBH	+2.00	TEH	TEC			10	COLD	600UL
		0.33	110	P 2	TWD	13	VC3	-0.84	TEH	TEC			10	COLD	600UL
		0.33	136	P 2	TWD	14	01H	+0.44	TEH	TEC			10	COLD	600UL
		0.43	99	P 2	TWD	17	VH1	+0.80	TEH	TEC			10	COLD	600UL
		0.83	109	P 2	TWD	26	DBC	+1.61	TEH	TEC			10	COLD	600UL
		0.42	64	P 2	TWD	16	VH1	+0.80	TEH	TEC			10	COLD	600UL
		0.33	110	P 2	TWD	13	VC3	-0.84	TEH	TEC			10	COLD	600UL
		0.83	108	P 2	TWD	26	DBC	+1.61	TEH	TEC			10	COLD	600UL
		0.87	96	P 2	TWD	27	DBH	+2.00	TEH	TEC			10	COLD	600UL
142	72	0.32	92	P 2	TWD	12	VH1	+1.01	TEH	TEC			9	COLD	600UL
		0.35	54	P 2	TWD	13	DBH	+1.69	TEH	TEC	NEW		9	COLD	600UL
		0.31	103	P 2	TWD	12	VH1	+1.01	TEH	TEC			9	COLD	600UL
142	74	0.32	52	P 2	TWD	12	DBH	+2.01	TEH	TEC	NEW		9	COLD	600UL
142	78	0.80	101	P 2	TWD	25	VH1	-0.90	TEH	TEC			9	COLD	600UL
		0.80	101	P 2	TWD	25	VH1	-0.90	TEH	TEC			9	COLD	600UL
142	80	0.38	157	P 2	TWD	15	VH2	-0.88	TEH	TEC			10	COLD	600UL
		0.38	154	P 2	TWD	15	VH2	-0.88	TEH	TEC			10	COLD	600UL
142	82	0.71	84	P 2	TWD	23	VH2	-0.90	TEH	TEC			9	COLD	600UL
		0.71	84	P 2	TWD	23	VH2	-0.90	TEH	TEC			9	COLD	600UL
142	90	0.31	145	P 2	TWD	14	VH2	-0.83	TEH	TEC			12	COLD	600UL
		0.31	145	P 2	TWD	14	VH2	-0.83	TEH	TEC			12	COLD	600UL
142	92	0.37	153	P 2	TWD	16	VH1	-0.85	TEH	TEC			12	COLD	600UL
		0.28	50	P 2	TWD	12	VH2	-0.77	TEH	TEC			12	COLD	600UL
		0.37	153	P 2	TWD	16	VH1	-0.85	TEH	TEC			12	COLD	600UL
		0.28	50	P 2	TWD	12	VH2	-0.77	TEH	TEC			12	COLD	600UL
142	94	0.26	146	P 2	TWD	12	VH2	-0.86	TEH	TEC			12	COLD	600UL
		0.20	109	P 2	TWD	10	VH1	-0.79	TEH	TEC			12	COLD	600UL
		0.17	34	P 2	TWD	9	VH1	+0.81	TEH	TEC			12	COLD	600UL
		0.21	101	P 2	TWD	10	VH1	-0.79	TEH	TEC			12	COLD	600UL
		0.18	32	P 2	TWD	9	VH1	+0.81	TEH	TEC			12	COLD	600UL
		0.24	148	P 2	TWD	12	VH2	-0.86	TEH	TEC			12	COLD	600UL
142	98	0.40	115	P 2	TWD	16	VH1	+0.66	TEH	TEC			12	COLD	600UL
		0.38	121	P 2	TWD	16	VH1	+0.66	TEH	TEC			12	COLD	600UL
142	104	0.32	133	P 2	TWD	14	DBH	+2.20	TEH	TEC			11	COLD	600UL
		0.32	133	P 2	TWD	14	DBH	+2.20	TEH	TEC			11	COLD	600UL
142	108	0.29	128	P 2	TWD	13	VH1	-0.82	TEH	TEC			12	COLD	600UL
		0.27	156	P 2	TWD	13	VH2	-0.82	TEH	TEC			12	COLD	600UL
		0.31	127	P 2	TWD	14	VH3	+0.86	TEH	TEC			12	COLD	600UL
		0.31	127	P 2	TWD	14	VH3	+0.86	TEH	TEC			12	COLD	600UL
		0.29	122	P 2	TWD	14	VH1	-0.82	TEH	TEC			12	COLD	600UL
		0.29	154	P 2	TWD	13	VH2	-0.82	TEH	TEC			12	COLD	600UL
142	110	0.22	46	P 2	TWD	10	DBH	+2.13	TEH	TEC	NEW		12	COLD	600UL
143	71	0.37	41	P 2	TWD	15	DBH	-1.68	TEH	TEC			10	COLD	600UL
		0.41	143	P 2	TWD	16	DBH	+2.15	TEH	TEC			10	COLD	600UL
		0.36	39	P 2	TWD	14	DBH	-1.68	TEH	TEC			10	COLD	600UL
		0.38	150	P 2	TWD	15	DBH	+2.15	TEH	TEC			10	COLD	600UL
143	75	0.35	86	P 2	TWD	14	DBH	+2.10	TEH	TEC			10	COLD	600UL
		0.35	86	P 2	TWD	14	DBH	+2.10	TEH	TEC			10	COLD	600UL
143	79	0.58	94	P 2	TWD	20	DBH	+2.05	TEH	TEC			9	COLD	600UL
		0.58	94	P 2	TWD	20	DBH	+2.05	TEH	TEC			9	COLD	600UL

MAI, MCI, MMI, MVI, SAI, SCI, SVI, 0-100%TWD

QUERY: rpc_icodes_and_0-100%twd.qry

ROW	LINE	VOLTS	DEG	CHN	IND	%TW	LOCATION		EXT	EXT	UTIL 1	UTIL 2	CAL #	LEG	PROBE
143	83	0.17	25	P 2	TWD	8	DBC	+1.78	TEH	TEC	NEW		10	COLD	600UL
143	89	0.26	49	P 2	TWD	12	08C	+0.80	TEH	TEC			11	COLD	600UL
		0.26	49	P 2	TWD	12	08C	+0.80	TEH	TEC			11	COLD	600UL
143	91	0.44	27	P 2	TWD	18	VC1	-0.84	TEH	TEC			11	COLD	600UL
		0.44	27	P 2	TWD	18	VC1	-0.84	TEH	TEC			11	COLD	600UL
143	99	0.17	45	P 2	TWD	8	DBC	+1.75	TEH	TEC	NEW		11	COLD	600UL
143	101	0.27	55	P 2	TWD	12	VC1	-0.84	TEH	TEC			11	COLD	600UL
		0.27	55	P 2	TWD	12	VC1	-0.84	TEH	TEC			11	COLD	600UL
143	105	0.35	56	P 2	TWD	15	DBH	-1.87	TEH	TEC			12	COLD	600UL
		0.29	17	P 2	TWD	13	DBH	+1.96	TEH	TEC			12	COLD	600UL
		0.48	122	P 2	TWD	19	DBC	+1.72	TEH	TEC			12	COLD	600UL
		0.35	56	P 2	TWD	15	DBH	-1.87	TEH	TEC			12	COLD	600UL
		0.48	122	P 2	TWD	19	DBC	+1.72	TEH	TEC			12	COLD	600UL
		0.29	17	P 2	TWD	13	DBH	+1.96	TEH	TEC			12	COLD	600UL
144	78	1.26	45	P 2	TWD	33	DBH	+2.06	TEH	TEC			9	COLD	600UL
		1.26	45	P 2	TWD	33	DBH	+2.06	TEH	TEC			9	COLD	600UL
144	80	0.39	136	P 2	TWD	14	DBC	+2.24	TEH	TEC			9	COLD	600UL
		0.39	136	P 2	TWD	14	DBC	+2.24	TEH	TEC			9	COLD	600UL
144	82	0.24	95	P 2	TWD	9	DBH	+2.25	TEH	TEC			9	COLD	600UL
		0.29	138	P 2	TWD	11	DBC	+1.90	TEH	TEC	NEW		9	COLD	600UL
		0.25	96	P 2	TWD	10	DBH	+2.25	TEH	TEC			9	COLD	600UL
144	84	0.39	132	P 2	TWD	16	VH2	-0.95	TEH	TEC			10	COLD	600UL
		0.33	146	P 2	TWD	14	VH2	-0.95	TEH	TEC			10	COLD	600UL
144	92	0.34	78	P 2	TWD	15	10C	-1.02	TEH	TEC			11	COLD	600UL
		0.37	67	P 2	TWD	15	10C	-1.02	TEH	TEC			11	COLD	600UL
144	96	0.39	79	P 2	TWD	16	DBH	+1.83	TEH	TEC			11	COLD	600UL
		0.82	65	P 2	TWD	27	VH1	+0.97	TEH	TEC			11	COLD	600UL
		0.29	24	P 2	TWD	13	VH1	+0.21	TEH	TEC			11	COLD	600UL
		0.39	79	P 2	TWD	16	DBH	+1.83	TEH	TEC			11	COLD	600UL
		0.29	24	P 2	TWD	13	VH1	+0.21	TEH	TEC			11	COLD	600UL
		0.83	69	P 2	TWD	27	VH1	+0.97	TEH	TEC			11	COLD	600UL
144	102	0.26	51	P 2	TWD	12	DBH	+1.65	TEH	TEC			12	COLD	600UL
		0.45	77	P 2	TWD	18	VC3	+0.92	TEH	TEC			12	COLD	600UL
		0.26	51	P 2	TWD	12	DBH	+1.65	TEH	TEC			12	COLD	600UL
		0.40	83	P 2	TWD	17	VC3	+0.92	TEH	TEC			12	COLD	600UL
144	104	0.81	118	P 2	TWD	27	DBC	+1.69	TEH	TEC			12	COLD	600UL
		0.41	17	P 2	TWD	17	DBH	+1.79	TEH	TEC			12	COLD	600UL
		0.43	23	P 2	TWD	17	DBH	+1.79	TEH	TEC			12	COLD	600UL
		0.81	118	P 2	TWD	27	DBC	+1.69	TEH	TEC			12	COLD	600UL
145	75	0.83	94	P 2	TWD	26	DBH	+1.91	TEH	TEC			9	COLD	600UL
		0.86	96	P 2	TWD	26	DBH	+1.91	TEH	TEC			9	COLD	600UL
145	91	0.49	85	P 2	TWD	19	VC1	-0.84	TEH	TEC			12	COLD	600UL
		0.49	85	P 2	TWD	19	VC1	-0.84	TEH	TEC			12	COLD	600UL
145	93	0.26	53	P 2	TWD	11	VC1	-0.73	TEH	TEC			12	COLD	600UL
		0.49	139	P 2	TWD	19	DBC	+1.36	TEH	TEC			12	COLD	600UL
		0.49	139	P 2	TWD	19	DBC	+1.36	TEH	TEC			12	COLD	600UL
		0.24	48	P 2	TWD	12	VC1	-0.73	TEH	TEC			12	COLD	600UL
145	95	0.16	37	P 2	TWD	8	DBC	-1.41	TEH	TEC	NEW		12	COLD	600UL
145	99	0.31	143	P 2	TWD	14	08H	+0.77	TEH	TEC			12	COLD	600UL
		0.50	136	P 2	TWD	20	VH2	+0.83	TEH	TEC			12	COLD	600UL
		0.28	67	P 2	TWD	13	VH3	+0.28	TEH	TEC			12	COLD	600UL
		0.82	138	P 2	TWD	27	VH3	+0.86	TEH	TEC			12	COLD	600UL
		0.50	136	P 2	TWD	20	VH2	+0.83	TEH	TEC			12	COLD	600UL
		0.82	138	P 2	TWD	27	VH3	+0.86	TEH	TEC			12	COLD	600UL
		0.30	142	P 2	TWD	14	08H	+0.77	TEH	TEC			12	COLD	600UL
		0.28	67	P 2	TWD	12	VH3	+0.28	TEH	TEC			12	COLD	600UL

MAI, MCI, MMI, MVI, SAI, SCI, SVI, 0-100%TWD

QUERY: rpc_icodes_and_0-100%twd.qry

ROW	LINE	VOLTS	DEG	CHN	IND	%TW	LOCATION		EXT	EXT	UTIL 1	UTIL 2	CAL #	LEG	PROBE
146	84	0.45	113	P 2	TWD	16	VH2	-1.07	TEH	TEC			9	COLD	600UL
		0.45	113	P 2	TWD	16	VH2	-1.07	TEH	TEC			9	COLD	600UL
146	90	0.32	120	P 2	TWD	14	VH2	-1.09	TEH	TEC			12	COLD	600UL
		0.74	84	P 2	TWD	26	DBC	+1.41	TEH	TEC			12	COLD	600UL
		0.74	84	P 2	TWD	26	DBC	+1.41	TEH	TEC			12	COLD	600UL
		0.28	133	P 2	TWD	13	VH2	-1.09	TEH	TEC			12	COLD	600UL
146	92	0.41	122	P 2	TWD	17	10C	+0.71	TEH	TEC			12	COLD	600UL
		0.28	48	P 2	TWD	13	VC1	+0.90	TEH	TEC			12	COLD	600UL
		0.33	49	P 2	TWD	15	DBC	+1.26	TEH	TEC			12	COLD	600UL
		0.33	77	P 2	TWD	14	VC1	+0.90	TEH	TEC			12	COLD	600UL
		0.41	122	P 2	TWD	17	10C	+0.71	TEH	TEC			12	COLD	600UL
		0.34	50	P 2	TWD	15	DBC	+1.26	TEH	TEC			12	COLD	600UL
146	96	0.36	107	P 6	TWD	20	DBC	+1.79	DBC	DBC	LAR		131	COLD	580FH
146	98	1 42	137	P 2	TWD	36	DBC	+1.44	TEH	TEC			12	COLD	600UL
		1.42	137	P 2	TWD	36	DBC	+1.44	TEH	TEC			12	COLD	600UL
146	100	0.26	101	P 2	TWD	12	VC2	-0.83	TEH	TEC			12	COLD	600UL
		0.50	109	P 2	TWD	20	10C	+0.68	TEH	TEC			12	COLD	600UL
		0.30	81	P 2	TWD	13	08C	-0.28	TEH	TEC			12	COLD	600UL
		0.32	73	P 2	TWD	14	10C	+0.00	TEH	TEC			12	COLD	600UL
		0.28	85	P 2	TWD	12	08C	-0.28	TEH	TEC			12	COLD	600UL
		0.19	83	P 2	TWD	10	VC2	-0.83	TEH	TEC			12	COLD	600UL
		0.50	111	P 2	TWD	20	10C	+0.68	TEH	TEC			12	COLD	600UL
		0.32	73	P 2	TWD	14	10C	+0.00	TEH	TEC			12	COLD	600UL
147	91	0.38	105	P 2	TWD	16	VC1	-0.90	TEH	TEC			12	COLD	600UL
		0.62	117	P 2	TWD	23	VC1	+0.69	TEH	TEC			12	COLD	600UL
		0.38	105	P 2	TWD	16	VC1	-0.90	TEH	TEC			12	COLD	600UL
		0.62	117	P 2	TWD	23	VC1	+0.69	TEH	TEC			12	COLD	600UL
147	93	0.66	135	P 2	TWD	24	VH2	-0.65	TEH	TEC			12	COLD	600UL
		0.66	135	P 2	TWD	24	VH2	-0.65	TEH	TEC			12	COLD	600UL
147	95	0.78	99	P 6	TWD	33	DBC	+1.45	DBC	DBC	LAR		131	COLD	580FH

Total Tubes : 970
Total Records: 2370

Appendix 4

Inspection Summary

Steam Generator E-089

MAI, MCI, MMI, MVI, SAI, SCI, SVI, 0-100% twd

QUERY: QueryM3

ROW	LINE	VOLTS	DEG	CHN	IND	%TW	LOCATION		EXT	EXT	UTIL 1	UTIL 2	CAL #	LEG	PROBE
3	117	0.44	122	P 2	TWD	17	02H	+0.84	07H	TEH	LAR		30	HOT	600UL
3	131	0.29	107	P 2	TWD	12	03H	+0.79	07H	TEH	LAR		30	HOT	600UL
5	25	0.41	89	P 2	TWD	17	03H	+0.79	TEH	TEC			44	COLD	600UL
5	159	0.62	52	P 2	TWD	24	02H	-0.88	TEC	TEH			21	HOT	600UL
6	160	0.47	152	P 2	TWD	19	02H	-0.83	TEC	TEH			21	HOT	600UL
8	154	0.54	122	P 2	TWD	21	02H	-0.88	TEC	TEH			21	HOT	600UL
14	110	0.22	42	P 2	TWD	11	DBH	-1.54	TEH	TEC	NEW		52	COLD	600UL
16	60	0.53	103	P 2	TWD	22	01H	+0.57	TEC	TEH			23	HOT	600UL
16	128	0.19	148	P 2	TWD	9	DBH	-1.09	TEH	TEC			51	COLD	600UL
		0.21	144	P 2	TWD	10	DBH	-1.09	TEH	TEC			51	COLD	600UL
18	8	0.27	73	P 2	TWD	12	02H	-0.83	TEH	TEC			42	COLD	600UL
19	165	0.23	128	P 2	TWD	12	01H	-1.03	TEC	TEH			18	HOT	600UL
19	171	0.36	152	P 2	TWD	17	DBC	+1.50	TEC	TEH	NEW		20	HOT	600UL
20	138	0.32	76	P 2	TWD	13	DBH	+1.61	TEC	TEH	NEW		7	HOT	600UL
20	166	0.30	92	P 2	TWD	13	02H	+0.89	TEC	TEH			17	HOT	600UL
21	67	0.59	73	P 2	TWD	21	VSM	-0.87	TEH	TEC			7	COLD	600UL
		0.59	73	P 2	TWD	21	VSM	-0.87	TEH	TEC			7	COLD	600UL
22	32	0.44	51	P 2	TWD	16	02H	-1.20	TEH	TEC			34	COLD	600UL
22	164	0.36	80	P 2	TWD	17	DBC	+1.62	TEC	TEH			18	HOT	600UL
		0.36	85	P 2	TWD	17	DBC	+1.62	TEC	TEH			18	HOT	600UL
22	170	0.31	37	P 2	TWD	13	01C	+0.87	TEC	TEH			19	HOT	600UL
24	20	0.38	102	P 2	TWD	19	07H	+0.87	TEH	TEC	NEW		39	COLD	600UL
24	22	0.30	103	P 2	TWD	13	VSM	-0.68	TEH	TEC			38	COLD	600UL
		0.30	103	P 2	TWD	13	VSM	-0.68	TEH	TEC			38	COLD	600UL
24	68	0.36	52	P 2	TWD	15	DBH	+1.70	TEH	TEC	NEW		8	COLD	600UL
25	65	0.26	133	P 2	TWD	11	VSM	+0.92	TEH	TEC	NEW		9	COLD	600UL
25	67	0.37	132	P 2	TWD	15	VSM	-0.84	TEH	TEC			7	COLD	600UL
		0.37	135	P 2	TWD	15	VSM	-0.84	TEH	TEC			7	COLD	600UL
25	115	0.48	67	P 2	TWD	21	VSM	+1.00	TEH	TEC			19	COLD	600UL
		0.48	69	P 2	TWD	21	VSM	+1.00	TEH	TEC			19	COLD	600UL
26	38	0.30	101	P 2	TWD	13	03H	-0.18	TEH	TEC			32	COLD	600UL
26	48	0.44	27	P 2	TWD	22	VSM	-0.93	TEC	TEH			24	HOT	600UL
		0.44	27	P 2	TWD	22	VSM	-0.93	TEC	TEH			24	HOT	600UL
26	162	0.34	157	P 2	TWD	16	DBC	+1.51	TEC	TEH			18	HOT	600UL
		0.34	157	P 2	TWD	16	DBC	+1.51	TEC	TEH			18	HOT	600UL
27	113	0.25	16	2	SAI		TSH	-1.28	TSH	TSH	0.0	9.45	108	HOT	580PP
27	167	0.17	170	P 2	TWD	6	DBH	+0.85	TEC	TEH	NEW		20	HOT	600UL
29	35	0.40	82	P 2	TWD	15	02H	-1.18	TEH	TEC			34	COLD	600UL
29	107	0.17	157	P 2	TWD	8	DBC	-1.70	TEH	TEC	NEW		26	COLD	600UL
30	44	0.28	74	P 2	TWD	14	07H	+0.91	TEH	TEC	NEW		31	COLD	600UL
30	122	0.27	68	P 2	TWD	13	05H	+0.51	TEH	TEC			19	COLD	600UL
30	126	0.17	101	P 1	SCI		TSH	+0.05	TSH	TSH	.71	9.14	100	HOT	580PP

MAI, MCI, MMI, MVI, SAI, SCI, SVI, 0-100% twd

QUERY: QueryM3

ROW	LINE	VOLTS	DEG	CHN	IND	%TW	LOCATION		EXT	EXT	UTIL 1	UTIL 2	CAL #	LEG	PROBE
31	41	0.31	17	P 1	SCI		TSH	-0.12	TSH	TSH	0.20	11.92	97	HOT	580PP
31	51	0.38	136	P 2	TWD 17		06H	+0.77	TEC	TEH			23	HOT	600UL
31	71	1.36	107	P 2	TWD 36		DBH	+0.00	TEH	TEC			8	COLD	600UL
		1.35	107	P 2	TWD 36		DBH	+0.00	TEH	TEC			8	COLD	600UL
		0.23	128	P 2	TWD 10		DBC	+2.04	TEH	TEC	NEW		8	COLD	600UL
		1.62	90	P 2	TWD 40		DBH	+0.00	TEH	TEC			51	COLD	600UL
31	107	0.50	59	P 2	TWD 20		DBH	-1.87	TEH	TEC			25	COLD	600UL
		0.49	62	P 2	TWD 20		DBH	-1.87	TEH	TEC			25	COLD	600UL
31	111	0.29	20	2	SAI		TSH	-3.78	TSH	TSH	0.0	10.19	107	HOT	580PP
31	123	2.08	32	P 1	MCI		TSH	-7.37	TSH	TSH	3.02	8.73	100	HOT	580PP
32	72	1.35	93	P 2	TWD 35		DBH	-1.71	TEH	TEC			8	COLD	600UL
		1.34	94	P 2	TWD 35		DBH	-1.71	TEH	TEC			8	COLD	600UL
		1.54	94	P 2	TWD 36		DBH	-1.71	TEH	TEC			47	COLD	600UL
32	118	0.41	124	P 2	TWD 19		VSM	-0.73	TEH	TEC			19	COLD	600UL
		0.42	119	P 2	TWD 19		VSM	-0.73	TEH	TEC			19	COLD	600UL
33	55	0.94	58	P 2	TWD 29		VSM	+0.94	TEH	TEC			9	COLD	600UL
		0.27	147	P 2	TWD 11		VSM	-0.95	TEH	TEC			9	COLD	600UL
		0.31	22	P 2	TWD 12		VSM	-0.95	TEH	TEC			9	COLD	600UL
		0.94	59	P 2	TWD 29		VSM	+0.94	TEH	TEC			9	COLD	600UL
33	71	0.57	117	P 2	TWD 21		DBC	+1.82	TEH	TEC			7	COLD	600UL
		0.57	117	P 2	TWD 21		DBC	+1.82	TEH	TEC			7	COLD	600UL
33	171	0.36	134	P 2	TWD 15		01C	-0.02	TEC	TEH			19	HOT	600UL
34	28	0.40	148	P 2	TWD 14		VSM	+0.46	TEH	TEC			34	COLD	600UL
		0.40	148	P 2	TWD 14		VSM	+0.46	TEH	TEC			34	COLD	600UL
34	72	0.75	143	P 2	TWD 25		DBC	-2.15	TEH	TEC			7	COLD	600UL
		0.75	143	P 2	TWD 25		DBC	-2.15	TEH	TEC			7	COLD	600UL
		0.24	54	P 2	TWD 10		DBH	-1.69	TEH	TEC	NEW		7	COLD	600UL
34	104	0.72	116	P 2	TWD 27		DBC	+2.18	TEH	TEC			26	COLD	600UL
		1.04	133	P 2	TWD 33		DBC	+2.18	TEH	TEC			26	COLD	600UL
34	128	0.11	89	P 1	SCI		TSH	+0.09	TSH	TSH	0	8.96	100	HOT	580PP
34	148	0.38	66	P 2	TWD 18		VSM	-0.72	TEC	TEH			12	HOT	600UL
		0.37	66	P 2	TWD 17		VSM	-0.72	TEC	TEH			12	HOT	600UL
35	45	0.33	87	P 2	TWD 16		VSM	+0.59	TEH	TEC	NEW		31	COLD	600UL
35	71	0.72	102	P 2	TWD 25		VSM	-0.62	TEH	TEC			8	COLD	600UL
		0.27	142	P 2	TWD 11		VSM	+0.13	TEH	TEC			8	COLD	600UL
		0.72	102	P 2	TWD 25		VSM	-0.62	TEH	TEC			8	COLD	600UL
		0.27	142	P 2	TWD 11		VSM	+0.13	TEH	TEC			8	COLD	600UL
35	113	0.46	116	P 2	TWD 14		VSM	-0.56	TEH	TEC			26	COLD	600UL
		0.34	111	P 2	TWD 16		VSM	-0.10	TEH	TEC			26	COLD	600UL
		0.47	122	P 2	TWD 20		VSM	-0.56	TEH	TEC			26	COLD	600UL
		0.36	121	P 2	TWD 17		VSM	-0.10	TEH	TEC			26	COLD	600UL
36	24	0.36	95	P 2	TWD 19		DBC	+1.95	TEH	TEC	NEW		39	COLD	600UL
36	30	0.56	123	P 2	TWD 19		VSM	+1.01	TEH	TEC			34	COLD	600UL
		0.50	89	P 2	TWD 17		VSM	+1.01	TEH	TEC			34	COLD	600UL
36	72	0.27	43	P 2	TWD 12		DBH	-1.75	TEH	TEC			8	COLD	600UL
		0.28	39	P 2	TWD 12		DBH	-1.75	TEH	TEC			8	COLD	600UL
36	104	0.33	159	P 2	TWD 15		DBH	+1.79	TEH	TEC	NEW		25	COLD	600UL
36	144	0.37	122	P 2	TWD 14		VSM	-0.73	TEC	TEH	NEW		7	HOT	600UL
36	146	0.28	53	P 2	TWD 11		VSM	+0.94	TEC	TEH			7	HOT	600UL
		0.28	57	P 2	TWD 11		VSM	+0.94	TEC	TEH			7	HOT	600UL

MAI, MCI, MMI, MVI, SAI, SCI, SVI, 0-100% twd

QUERY: QueryM3

ROW	LINE	VOLTS	DEG	CHN	IND	%TW	LOCATION		EXT	EXT	UTIL 1	UTIL 2	CAL #	LEG	PROBE
37	53	0.62	38	P 2	TWD	21	VSM	-0.02	TEH	TEC	NEW		11	COLD	600UL
37	71	1.05	127	P 2	TWD	31	VSM	-0.66	TEH	TEC			7	COLD	600UL
		0.68	134	P 2	TWD	24	VSM	+0.87	TEH	TEC			7	COLD	600UL
		0.46	70	P 2	TWD	18	VSM	-0.02	TEH	TEC			7	COLD	600UL
		1.05	127	P 2	TWD	31	VSM	-0.66	TEH	TEC			7	COLD	600UL
		0.46	70	P 2	TWD	18	VSM	+0.02	TEH	TEC			7	COLD	600UL
		0.68	134	P 2	TWD	24	VSM	+0.86	TEH	TEC			7	COLD	600UL
		0.66	105	P 2	TWD	22	VSM	+0.87	TEH	TEC			47	COLD	600UL
		0.50	90	P 2	TWD	18	VSM	-0.02	TEH	TEC			47	COLD	600UL
		1.03	107	P 2	TWD	29	VSM	-0.66	TEH	TEC			47	COLD	600UL
37	103	0.98	116	P 2	TWD	32	DBC	+1.84	TEH	TEC			26	COLD	600UL
		0.71	112	P 2	TWD	26	DBH	+1.94	TEH	TEC			26	COLD	600UL
		0.93	85	P 2	TWD	31	DBC	+1.84	TEH	TEC			51	COLD	600UL
		0.63	80	P 2	TWD	25	DBH	+1.94	TEH	TEC			51	COLD	600UL
		0.70	113	P 2	TWD	27	DBH	+1.94	TEH	TEC			26	COLD	600UL
		0.98	116	P 2	TWD	32	DBC	+1.84	TEH	TEC			26	COLD	600UL
37	107	0.58	114	P 2	TWD	24	VSM	-0.89	TEH	TEC			26	COLD	600UL
		0.55	105	P 2	TWD	23	VSM	+0.66	TEH	TEC			26	COLD	600UL
		0.23	43	P 2	TWD	11	VSM	-0.10	TEH	TEC			26	COLD	600UL
		0.58	114	P 2	TWD	24	VSM	-0.89	TEH	TEC			26	COLD	600UL
		0.60	32	P 2	TWD	24	VSM	+0.66	TEH	TEC			26	COLD	600UL
		0.23	43	P 2	TWD	11	VSM	-0.10	TEH	TEC			26	COLD	600UL
37	145	0.61	119	P 2	TWD	21	VSM	+0.82	TEC	TEH			7	HOT	600UL
		0.61	119	P 2	TWD	21	VSM	+0.82	TEC	TEH			7	HOT	600UL
37	157	0.27	53	P 2	TWD	11	VSM	+0.77	TEC	TEH			17	HOT	600UL
		0.27	53	P 2	TWD	12	VSM	+0.77	TEC	TEH			17	HOT	600UL
37	159	0.28	52	P 2	TWD	12	VSM	+0.83	TEC	TEH			17	HOT	600UL
		0.28	51	P 2	TWD	13	VSM	+0.83	TEC	TEH			17	HOT	600UL
37	165	0.29	58	P 2	TWD	12	VSM	+0.80	TEC	TEH			17	HOT	600UL
		0.29	59	P 2	TWD	13	VSM	+0.80	TEC	TEH			17	HOT	600UL
37	171	0.62	72	P 2	TWD	23	VSM	-1.01	TEC	TEH			19	HOT	600UL
		0.71	115	P 2	TWD	25	VSM	-1.01	TEC	TEH			19	HOT	600UL
38	28	0.45	33	P 2	TWD	16	VSM	+0.82	TEH	TEC			34	COLD	600UL
		0.23	41	P 2	TWD	9	VSM	-0.79	TEH	TEC			34	COLD	600UL
		0.25	55	P 2	TWD	9	VSM	-0.79	TEH	TEC			34	COLD	600UL
		0.33	16	P 2	TWD	12	VSM	+0.82	TEH	TEC			34	COLD	600UL
38	38	0.56	132	P 2	TWD	21	VSM	+0.00	TEH	TEC			32	COLD	600UL
		0.56	132	P 2	TWD	21	VSM	+0.00	TEH	TEC			32	COLD	600UL
38	40	0.77	43	P 2	TWD	27	VSM	-0.83	TEH	TEC			32	COLD	600UL
		0.28	161	P 2	TWD	12	VSM	-0.23	TEH	TEC			32	COLD	600UL
		0.77	43	P 2	TWD	27	VSM	-0.83	TEH	TEC			32	COLD	600UL
		0.26	163	P 2	TWD	11	VSM	-0.23	TEH	TEC			32	COLD	600UL
38	56	0.22	137	P 2	TWD	9	06H	+0.50	TEH	TEC			9	COLD	600UL
38	72	0.98	73	P 2	TWD	30	DBH	-1.78	TEH	TEC			7	COLD	600UL
		0.94	90	P 2	TWD	28	DBH	-1.78	TEH	TEC			47	COLD	600UL
		0.98	73	P 2	TWD	30	DBH	-1.78	TEH	TEC			7	COLD	600UL
38	102	1.00	121	P 2	TWD	31	DBH	-2.13	TEH	TEC			25	COLD	600UL
		0.31	99	P 2	TWD	14	DBC	-1.70	TEH	TEC			25	COLD	600UL
		0.93	106	P 2	TWD	31	DBH	-2.13	TEH	TEC			51	COLD	600UL
		0.23	61	P 2	TWD	11	DBC	-1.70	TEH	TEC			51	COLD	600UL
		1.00	121	P 2	TWD	31	DBH	-2.13	TEH	TEC			25	COLD	600UL
		0.29	106	P 2	TWD	13	DBC	-1.70	TEH	TEC			25	COLD	600UL
38	128	0.27	118	P 2	TWD	13	VSM	+1.06	TEH	TEC	NEW		18	COLD	600UL
38	162	0.36	33	P 2	TWD	17	VSM	-0.84	TEC	TEH			18	HOT	600UL
		0.23	92	P 2	TWD	12	VSM	-0.02	TEC	TEH			18	HOT	600UL
		0.36	33	P 2	TWD	17	VSM	-0.84	TEC	TEH			18	HOT	600UL
		0.21	91	P 2	TWD	11	VSM	-0.02	TEC	TEH			18	HOT	600UL

MAI, MCI, MMI, MVI, SAI, SCI, SVI, 0-100% twd

QUERY: QueryM3

ROW	LINE	VOLTS	DEG	CHN	IND	%TW	LOCATION		EXT	EXT	UTIL 1	UTIL 2	CAL #	LEG	PROBE
39	41	0.50	80	P 2	TWD	21	DBH	-1.51	TEH	TEC	NEW		31	COLD	600UL
39	43	0.38	40	P 2	TWD	16	VSM	+0.91	TEH	TEC			32	COLD	600UL
		0.38	40	P 2	TWD	16	VSM	+0.91	TEH	TEC			32	COLD	600UL
39	69	0.30	134	P 2	TWD	13	VSM	+0.69	TEH	TEC	NEW		8	COLD	600UL
39	71	0.26	155	P 2	TWD	12	VSM	+0.64	TEH	TEC	NEW		8	COLD	600UL
39	73	0.53	54	P 2	TWD	20	DBH	+1.99	TEH	TEC			8	COLD	600UL
		0.53	53	P 2	TWD	20	DBH	+1.99	TEH	TEC			8	COLD	600UL
39	101	0.30	16	P 2	TWD	15	DBH	-1.58	TEH	TEC			27	COLD	600UL
		0.30	16	P 2	TWD	13	DBH	-1.58	TEH	TEC			27	COLD	600UL
39	147	0.48	146	P 2	TWD	18	VSM	+0.78	TEC	TEH			7	HOT	600UL
		0.48	146	P 2	TWD	18	VSM	+0.78	TEC	TEH			7	HOT	600UL
40	68	0.46	36	P 2	TWD	18	VSM	-0.86	TEH	TEC	NEW		8	COLD	600UL
40	110	0.84	124	P 2	TWD	28	VSM	-0.68	TEH	TEC			25	COLD	600UL
		0.31	111	P 2	TWD	14	VSM	-0.14	TEH	TEC			25	COLD	600UL
		0.31	111	P 2	TWD	14	VSM	-0.14	TEH	TEC			25	COLD	600UL
		0.84	124	P 2	TWD	28	VSM	-0.68	TEH	TEC			25	COLD	600UL
		0.28	97	P 2	TWD	13	DBC	+1.93	TEH	TEC	NEW		25	COLD	600UL
40	112	0.57	152	P 2	TWD	23	DBH	-2.02	TEH	TEC	NEW		26	COLD	600UL
40	146	0.51	70	P 2	TWD	19	VSM	+0.90	TEC	TEH			7	HOT	600UL
		0.51	70	P 2	TWD	18	VSM	+0.90	TEC	TEH			7	HOT	600UL
40	156	1.16	113	P 2	TWD	32	VSM	+0.87	TEC	TEH			17	HOT	600UL
		0.96	115	P 2	TWD	31	VSM	+0.87	TEC	TEH			17	HOT	600UL
		0.90	122	P 2	TWD	28	VSM	+0.87	TEH	TEC			49	COLD	600UL
40	162	0.43	94	P 2	TWD	15	VSM	-0.80	TEC	TEH			17	HOT	600UL
		0.24	28	P 2	TWD	10	VSM	-0.09	TEC	TEH			17	HOT	600UL
		0.31	63	P 2	TWD	14	VSM	-0.09	TEC	TEH			17	HOT	600UL
		0.39	109	P 2	TWD	17	VSM	-0.80	TEC	TEH			17	HOT	600UL
40	168	0.66	32	P 2	TWD	24	VSM	+0.86	TEC	TEH			19	HOT	600UL
		0.31	25	P 2	TWD	14	VSM	-0.23	TEC	TEH			19	HOT	600UL
		0.17	153	P 2	TWD	8	VSM	-0.65	TEC	TEH			19	HOT	600UL
		0.66	32	P 2	TWD	24	VSM	+0.86	TEC	TEH			19	HOT	600UL
		0.26	145	P 2	TWD	12	VSM	-0.23	TEC	TEH			19	HOT	600UL
		0.20	155	P 2	TWD	10	VSM	-0.65	TEC	TEH			19	HOT	600UL
40	170	0.54	124	P 2	TWD	21	01C	+0.94	TEC	TEH			20	HOT	600UL
41	5	0.24	50	P 2	TWD	11	DBC	+1.98	TEH	TEC	NEW		42	COLD	600UL
41	7	0.43	68	P 2	TWD	18	VSM	+0.69	TEH	TEC			42	COLD	600UL
		0.30	95	P 2	TWD	13	VSM	-0.65	TEH	TEC			42	COLD	600UL
		0.30	95	P 2	TWD	13	VSM	-0.65	TEH	TEC			42	COLD	600UL
		0.43	67	P 2	TWD	18	VSM	+0.69	TEH	TEC			42	COLD	600UL
41	31	1.21	121	P 2	TWD	32	VSM	+0.84	TEH	TEC			34	COLD	600UL
		1.21	121	P 2	TWD	32	VSM	+0.84	TEH	TEC			34	COLD	600UL
		1.13	114	P 2	TWD	31	VSM	+0.84	TEH	TEC			47	COLD	600UL
41	39	0.31	92	P 2	TWD	13	DBC	+1.37	TEH	TEC	NEW		32	COLD	600UL
41	47	0.40	147	P 2	TWD	18	VSM	+0.83	TEC	TEH			23	HOT	600UL
		0.37	142	P 2	TWD	17	VSM	+0.00	TEC	TEH			23	HOT	600UL
		0.37	142	P 2	TWD	17	VSM	+0.00	TEC	TEH			23	HOT	600UL
		0.40	147	P 2	TWD	18	VSM	+0.83	TEC	TEH			23	HOT	600UL
41	59	0.46	119	P 2	TWD	19	VSM	-0.85	TEH	TEC			10	COLD	600UL
		0.41	146	P 2	TWD	17	VSM	+0.00	TEH	TEC			10	COLD	600UL
		0.46	119	P 2	TWD	19	VSM	-0.85	TEH	TEC			10	COLD	600UL
		0.41	146	P 2	TWD	17	VSM	+0.00	TEH	TEC			10	COLD	600UL
41	63	0.45	89	P 2	TWD	17	VSM	-0.85	TEH	TEC			9	COLD	600UL
		0.46	59	P 2	TWD	17	VSM	+0.11	TEH	TEC			9	COLD	600UL
		0.50	63	P 2	TWD	19	VSM	+0.11	TEH	TEC			9	COLD	600UL

MAI, MCI, MMI, MVI, SAI, SCI, SVI, 0-100% twd

QUERY: QueryM3

ROW	LINE	VOLTS	DEG	CHN	IND	%TW	LOCATION		EXT	EXT	UTIL 1	UTIL 2	CAL #	LEG	PROBE
		0.45	88	P 2	TWD	17	VSM	-0.85	TEH	TEC			9	COLD	600UL
41	69	0.59	114	P 2	TWD	21	VSM	+0.87	TEH	TEC			7	COLD	600UL
		0.59	117	P 2	TWD	21	VSM	+0.87	TEH	TEC			7	COLD	600UL
41	103	0.49	124	P 2	TWD	21	DBC	+1.84	TEH	TEC			26	COLD	600UL
		0.49	124	P 2	TWD	21	DBC	+1.84	TEH	TEC			26	COLD	600UL
41	107	0.24	61	P 2	TWD	12	VSM	+0.99	TEH	TEC	NEW		26	COLD	600UL
		0.13	12	P 2	TWD	6	VSM	-0.75	TEH	TEC			26	COLD	600UL
41	113	0.52	135	P 2	TWD	21	VSM	-0.76	TEH	TEC			25	COLD	600UL
		0.21	128	P 2	TWD	10	VSM	-0.14	TEH	TEC			25	COLD	600UL
		0.21	128	P 2	TWD	10	VSM	-0.14	TEH	TEC			25	COLD	600UL
		0.52	133	P 2	TWD	21	VSM	-0.76	TEH	TEC			25	COLD	600UL
41	119	1.27	79	P 2	TWD	37	VSM	-1.08	TEH	TEC			19	COLD	600UL
		0.68	49	P 2	TWD	27	VSM	+0.04	TEH	TEC			19	COLD	600UL
		1.28	78	P 2	TWD	37	VSM	-1.08	TEH	TEC			19	COLD	600UL
		0.72	53	P 2	TWD	28	VSM	+0.04	TEH	TEC			19	COLD	600UL
41	123	0.60	60	P 2	TWD	23	VSM	+0.90	TEH	TEC			17	COLD	600UL
		0.60	60	P 2	TWD	23	VSM	+0.90	TEH	TEC			17	COLD	600UL
41	131	0.59	97	P 2	TWD	23	VSM	-0.77	TEC	TEH			28	HOT	600UL
		0.47	116	P 2	TWD	20	VSM	+0.74	TEC	TEH			28	HOT	600UL
		0.61	82	P 2	TWD	23	VSM	+0.74	TEC	TEH			28	HOT	600UL
		0.59	97	P 2	TWD	23	VSM	-0.77	TEC	TEH			28	HOT	600UL
41	157	0.66	131	P 2	TWD	22	VSM	+0.73	TEC	TEH			17	HOT	600UL
		0.58	133	P 2	TWD	23	VSM	+0.73	TEC	TEH			17	HOT	600UL
42	62	0.43	113	P 2	TWD	17	VSM	+0.20	TEH	TEC	NEW		9	COLD	600UL
42	68	1.59	118	P 2	TWD	37	VSM	-0.61	TEH	TEC			7	COLD	600UL
		1.13	107	P 2	TWD	32	VSM	+0.37	TEH	TEC			7	COLD	600UL
		1.59	118	P 2	TWD	37	VSM	-0.61	TEH	TEC			7	COLD	600UL
		1.13	107	P 2	TWD	32	VSM	+0.37	TEH	TEC			7	COLD	600UL
		0.62	84	P 2	TWD	21	VSM	+0.37	TEH	TEC			47	COLD	600UL
		1.58	125	P 2	TWD	37	VSM	-0.61	TEH	TEC			47	COLD	600UL
42	144	0.47	95	P 2	TWD	20	VSM	+0.74	TEC	TEH			8	HOT	600UL
		0.47	95	P 2	TWD	20	VSM	+0.74	TEC	TEH			8	HOT	600UL
42	148	0.47	132	P 2	TWD	20	VSM	+0.30	TEC	TEH			12	HOT	600UL
		0.33	134	P 2	TWD	15	VSM	+0.82	TEC	TEH			12	HOT	600UL
		0.33	134	P 2	TWD	15	VSM	+0.82	TEC	TEH			12	HOT	600UL
		0.44	84	P 2	TWD	19	VSM	+0.30	TEC	TEH			12	HOT	600UL
42	162	0.30	33	P 2	TWD	14	02H	-0.93	TEC	TEH			18	HOT	600UL
42	166	0.29	50	P 2	TWD	14	02H	-0.86	TEC	TEH			18	HOT	600UL
43	41	0.38	71	P 2	TWD	18	07H	+0.77	TEH	TEC	NEW		31	COLD	600UL
43	45	0.35	24	P 2	TWD	17	DBH	+1.89	TEH	TEC			31	COLD	600UL
		0.35	24	P 2	TWD	17	DBH	+1.89	TEH	TEC			31	COLD	600UL
43	51	0.37	132	P 2	TWD	17	02H	+0.79	TEH	TEC			12	COLD	600UL
43	73	1.03	81	P 2	TWD	31	DBH	+1.72	TEH	TEC			8	COLD	600UL
		0.51	48	P 2	TWD	20	VSM	+0.24	TEH	TEC			8	COLD	600UL
		1.03	88	P 2	TWD	31	DBH	+1.72	TEH	TEC			8	COLD	600UL
		0.51	48	P 2	TWD	20	VSM	+0.24	TEH	TEC			8	COLD	600UL
		0.63	66	P 2	TWD	22	VSM	+0.24	TEH	TEC			47	COLD	600UL
		1.09	100	P 2	TWD	31	DBH	+1.72	TEH	TEC			47	COLD	600UL
		0.32	67	P 2	TWD	13	VSM	+0.86	TEH	TEC	NEW		47	COLD	600UL
43	101	1.31	83	P 2	TWD	37	DBC	+1.85	TEH	TEC			27	COLD	600UL
		1.36	91	P 2	TWD	34	DBC	+1.85	TEH	TEC			47	COLD	600UL
		1.31	84	P 2	TWD	37	DBC	+1.85	TEH	TEC			27	COLD	600UL
		0.20	67	P 2	TWD	9	DBH	+2.48	TEH	TEC	NEW	LAR	27	COLD	600UL
43	103	1.14	173	P 2	TWD	33	DBC	+1.75	TEH	TEC			25	COLD	600UL
		1.36	159	P 2	TWD	38	DBC	+1.75	TEH	TEC			51	COLD	600UL

MAI, MCI, MMI, MVI, SAI, SCI, SVI, 0-100% twd

QUERY: QueryM3

ROW	LINE	VOLTS	DEG	CHN	IND	%TW	LOCATION		EXT	EXT	UTIL 1	UTIL 2	CAL #	LEG	PROBE
		1.11	173	P 2	TWD	33	DBC	+1.75	TEH	TEC			25	COLD	600UL
43	107	0.48	74	P 2	TWD	20	VSM	+0.61	TEH	TEC			25	COLD	600UL
		0.32	44	P 2	TWD	15	VSM	+0.29	TEH	TEC			25	COLD	600UL
		0.46	73	P 2	TWD	19	VSM	+0.61	TEH	TEC			25	COLD	600UL
		0.33	33	P 2	TWD	15	VSM	+0.29	TEH	TEC			25	COLD	600UL
		0.30	77	P 2	TWD	14	DBC	+1.76	TEH	TEC	NEW		25	COLD	600UL
43	117	0.59	62	P 2	TWD	23	VSM	-0.80	TEH	TEC			25	COLD	600UL
		1.17	112	P 2	TWD	34	VSM	+0.85	TEH	TEC			25	COLD	600UL
		0.32	43	P 2	TWD	15	VSM	+0.00	TEH	TEC			25	COLD	600UL
		0.59	62	P 2	TWD	23	VSM	-0.80	TEH	TEC			25	COLD	600UL
		1.17	112	P 2	TWD	34	VSM	+0.85	TEH	TEC			25	COLD	600UL
		0.31	47	P 2	TWD	15	VSM	+0.00	TEH	TEC			25	COLD	600UL
		0.34	57	P 2	TWD	16	VSM	+0.00	TEH	TEC			51	COLD	600UL
		0.56	55	P 2	TWD	23	VSM	-0.80	TEH	TEC			51	COLD	600UL
		1.08	108	P 2	TWD	34	VSM	+0.85	TEH	TEC			51	COLD	600UL
43	131	0.65	102	P 2	TWD	25	VSM	+0.84	TEC	TEH			27	HOT	600UL
		0.65	99	P 2	TWD	25	VSM	+0.84	TEC	TEH			27	HOT	600UL
43	145	0.45	100	P 2	TWD	20	VSM	-0.85	TEC	TEH			8	HOT	600UL
		0.83	112	P 2	TWD	29	VSM	+0.83	TEC	TEH			8	HOT	600UL
		0.45	100	P 2	TWD	20	VSM	-0.85	TEC	TEH			8	HOT	600UL
		0.83	112	P 2	TWD	29	VSM	+0.83	TEC	TEH			8	HOT	600UL
43	153	0.35	142	P 2	TWD	16	DBC	+1.53	TEC	TEH	NEW		12	HOT	600UL
43	159	0.45	18	P 2	TWD	20	02H	-0.68	TEC	TEH			18	HOT	600UL
44	66	0.28	72	P 6	TWD	16	DBC	+2.14	DBC	DBC	LAR		198	HOT	560FH
44	72	0.34	150	P 2	TWD	14	DBC	+1.55	TEH	TEC	NEW		8	COLD	600UL
44	74	0.23	79	P 2	TWD	10	DBH	-1.72	TEH	TEC	NEW		8	COLD	600UL
44	100	0.45	78	P 2	TWD	19	DBH	-1.78	TEH	TEC	NEW		27	COLD	600UL
44	112	0.29	48	P 2	TWD	14	VSM	-0.93	TEH	TEC			26	COLD	600UL
		0.16	105	P 2	TWD	8	VSM	+0.17	TEH	TEC			26	COLD	600UL
		0.29	48	P 2	TWD	14	VSM	-0.93	TEH	TEC			26	COLD	600UL
		0.24	124	P 2	TWD	12	VSM	+0.17	TEH	TEC			26	COLD	600UL
44	114	0.48	97	P 2	TWD	20	VSM	-0.76	TEH	TEC			25	COLD	600UL
		0.50	125	P 2	TWD	20	VSM	+0.98	TEH	TEC			25	COLD	600UL
		0.48	97	P 2	TWD	20	VSM	-0.76	TEH	TEC			25	COLD	600UL
		0.50	125	P 2	TWD	20	VSM	+0.98	TEH	TEC			25	COLD	600UL
44	128	0.42	160	P 2	TWD	17	VSM	-0.89	TEH	TEC			17	COLD	600UL
		0.52	149	P 2	TWD	20	VSM	+0.96	TEH	TEC			17	COLD	600UL
		0.42	160	P 2	TWD	17	VSM	-0.89	TEH	TEC			17	COLD	600UL
		0.52	149	P 2	TWD	20	VSM	+0.96	TEH	TEC			17	COLD	600UL
44	134	0.31	115	P 2	TWD	12	VSM	-0.69	TEC	TEH			7	HOT	600UL
		0.31	115	P 2	TWD	12	VSM	-0.69	TEC	TEH			7	HOT	600UL
44	158	0.53	140	P 2	TWD	19	VSM	+0.85	TEC	TEH			17	HOT	600UL
		0.39	98	P 2	TWD	14	VSM	-0.74	TEC	TEH			17	HOT	600UL
		0.22	136	P 2	TWD	9	VSM	-0.11	TEC	TEH			17	HOT	600UL
		0.41	145	P 2	TWD	17	VSM	+0.85	TEC	TEH			17	HOT	600UL
		0.36	115	P 2	TWD	16	VSM	-0.74	TEC	TEH			17	HOT	600UL
		0.21	137	P 2	TWD	9	VSM	-0.11	TEC	TEH			17	HOT	600UL
45	39	0.38	97	P 2	TWD	16	02H	-1.20	TEH	TEC			32	COLD	600UL
45	73	0.76	91	P 2	TWD	25	DBH	+1.49	TEH	TEC			7	COLD	600UL
		0.76	91	P 2	TWD	25	DBH	+1.49	TEH	TEC			7	COLD	600UL
45	101	0.75	101	P 2	TWD	28	DBC	+1.85	TEH	TEC			27	COLD	600UL
		0.75	113	P 2	TWD	27	DBC	+1.85	TEH	TEC			27	COLD	600UL
45	119	0.43	81	P 2	TWD	19	VSM	-1.02	TEH	TEC			19	COLD	600UL
		0.27	32	P 2	TWD	13	VSM	+0.79	TEH	TEC			19	COLD	600UL
		0.16	168	P 2	TWD	8	VSM	+0.17	TEH	TEC			19	COLD	600UL
		0.43	74	P 2	TWD	20	VSM	-1.02	TEH	TEC			19	COLD	600UL

MAI, MCI, MMI, MVI, SAI, SCI, SVI, 0-100% twd

QUERY: QueryM3

ROW	LINE	VOLTS	DEG	CHN	IND	%TW	LOCATION		EXT	EXT	UTIL 1	UTIL 2	CAL #	LEG	PROBE
		0.17	168	P 2	TWD	8	VSM	+0.17	TEH	TEC			19	COLD	600UL
		0.23	35	P 2	TWD	12	VSM	+0.79	TEH	TEC			19	COLD	600UL
45	131	0.73	94	P 2	TWD	26	VSM	+0.78	TEC	TEH			28	HOT	600UL
		0.42	134	P 2	TWD	18	VSM	-0.87	TEC	TEH			28	HOT	600UL
		0.73	94	P 2	TWD	26	VSM	+0.78	TEC	TEH			28	HOT	600UL
		0.42	134	P 2	TWD	18	VSM	-0.87	TEC	TEH			28	HOT	600UL
45	133	0.18	31	P 2	TWD	9	DBC	-1.30	TEC	TEH	NEW		26	HOT	600UL
45	135	0.50	137	P 2	TWD	18	VSM	+0.76	TEC	TEH			7	HOT	600UL
		1.16	125	P 2	TWD	32	VSM	-0.85	TEC	TEH			7	HOT	600UL
		0.50	137	P 2	TWD	18	VSM	+0.76	TEC	TEH			7	HOT	600UL
		1.16	125	P 2	TWD	32	VSM	-0.85	TEC	TEH			7	HOT	600UL
		0.42	128	P 2	TWD	19	VSM	+0.76	TEH	TEC			51	COLD	600UL
		0.87	108	P 2	TWD	30	VSM	-0.85	TEH	TEC			51	COLD	600UL
45	145	0.40	65	P 2	TWD	15	VSM	-0.83	TEC	TEH	NEW		7	HOT	600UL
45	167	0.27	156	P 2	TWD	12	VSM	+0.93	TEC	TEH			19	HOT	600UL
		0.27	156	P 2	TWD	13	VSM	+0.93	TEC	TEH			19	HOT	600UL
45	169	0.38	91	P 2	TWD	16	01C	+0.95	TEC	TEH			19	HOT	600UL
46	36	0.93	87	P 2	TWD	27	VSM	-0.85	TEH	TEC			34	COLD	600UL
		0.34	40	P 2	TWD	12	VSM	+0.27	TEH	TEC			34	COLD	600UL
		0.58	93	P 2	TWD	19	VSM	+0.93	TEH	TEC			34	COLD	600UL
		0.93	87	P 2	TWD	27	VSM	-0.85	TEH	TEC			34	COLD	600UL
		0.34	40	P 2	TWD	12	VSM	+0.27	TEH	TEC			34	COLD	600UL
		0.60	95	P 2	TWD	20	VSM	+0.93	TEH	TEC			34	COLD	600UL
46	54	0.24	135	P 2	TWD	11	DBH	+1.63	TEH	TEC	NEW		10	COLD	600UL
46	72	0.42	98	P 2	TWD	17	VSM	+0.80	TEH	TEC	NEW		7	COLD	600UL
46	78	1.07	126	P 2	TWD	31	DBH	+1.80	TEH	TEC			14	COLD	600UL
		0.14	38	P 2	TWD	6	DBH	-1.54	TEH	TEC			14	COLD	600UL
		0.29	178	P 2	TWD	13	DBC	+2.25	TEH	TEC			14	COLD	600UL
		0.17	89	P 2	TWD	7	DBH	-1.54	TEH	TEC			47	COLD	600UL
		0.62	9	P 2	TWD	21	DBC	+2.25	TEH	TEC			47	COLD	600UL
		0.85	125	P 2	TWD	26	DBH	+1.80	TEH	TEC			47	COLD	600UL
		0.14	38	P 2	TWD	7	DBH	-1.54	TEH	TEC			14	COLD	600UL
		1.07	126	P 2	TWD	31	DBH	+1.80	TEH	TEC			14	COLD	600UL
		0.29	178	P 2	TWD	13	DBC	+2.25	TEH	TEC			14	COLD	600UL
46	100	0.30	22	P 2	TWD	13	DBH	-1.80	TEH	TEC	NEW		27	COLD	600UL
		0.74	129	P 2	TWD	27	DBH	+1.66	TEH	TEC	NEW		27	COLD	600UL
46	104	0.53	93	P 2	TWD	22	VSM	-0.86	TEH	TEC			26	COLD	600UL
		0.53	93	P 2	TWD	22	VSM	-0.86	TEH	TEC			26	COLD	600UL
46	118	0.21	145	P 2	TWD	10	VSM	-1.03	TEH	TEC			26	COLD	600UL
		0.16	86	P 2	TWD	8	VSM	-1.03	TEH	TEC			26	COLD	600UL
46	138	0.48	125	P 2	TWD	20	04C	-0.14	TEC	TEH			2	HOT	600UL
46	146	0.70	89	P 2	TWD	26	VSM	-0.75	TEC	TEH			8	HOT	600UL
		0.62	116	P 2	TWD	24	VSM	+0.73	TEC	TEH			8	HOT	600UL
		0.62	116	P 2	TWD	24	VSM	+0.73	TEC	TEH			8	HOT	600UL
		0.70	89	P 2	TWD	26	VSM	-0.75	TEC	TEH			8	HOT	600UL
46	158	0.21	140	P 2	TWD	11	02H	-0.85	TEC	TEH			18	HOT	600UL
46	164	0.41	136	P 2	TWD	18	VSM	-0.83	TEC	TEH			18	HOT	600UL
		0.18	20	P 2	TWD	10	VSM	-0.11	TEC	TEH			18	HOT	600UL
		0.41	136	P 2	TWD	18	VSM	-0.83	TEC	TEH			18	HOT	600UL
		0.23	34	P 2	TWD	12	VSM	-0.11	TEC	TEH			18	HOT	600UL
46	170	0.31	52	P 2	TWD	13	05C	+0.93	TEC	TEH			19	HOT	600UL
47	45	0.45	67	P 2	TWD	20	02H	-1.23	TEH	TEC			31	COLD	600UL
47	73	0.67	65	P 2	TWD	24	DBH	+1.65	TEH	TEC			8	COLD	600UL
		0.68	61	P 2	TWD	24	DBH	+1.65	TEH	TEC			8	COLD	600UL

MAI, MCI, MMI, MVI, SAI, SCI, SVI, 0-100% twd

QUERY: QueryM3

ROW	LINE	VOLTS	DEG	CHN	IND	%TW	LOCATION		EXT	EXT	UTIL 1	UTIL 2	CAL #	LEG	PROBE
47	75	0.36	74	P 6	TWD	19	DBC	+1.76	DBC	DBC	LAR		198	HOT	560FH
		0.53	89	P 6	TWD	26	DBC	-2.04	DBC	DBC	LAR		198	HOT	560FH
		0.30	58	P 2	TWD	15	DBC	-2.10	TEH	TEC	NEW		6	COLD	600UL
47	101	0.47	16	P 2	TWD	20	DBC	+1.77	TEH	TEC			27	COLD	600UL
		0.58	16	P 2	TWD	23	DBC	+1.77	TEH	TEC			27	COLD	600UL
47	103	0.34	31	P 2	TWD	15	DBC	+1.75	TEH	TEC			25	COLD	600UL
		0.29	89	P 6	TWD	17	DBH	+1.88	DBH	DBH	LAR		198	HOT	560FH
		0.34	31	P 2	TWD	16	DBC	+1.75	TEH	TEC			25	COLD	600UL
		0.31	23	P 2	TWD	15	DBH	-1.55	TEH	TEC	NEW		25	COLD	600UL
47	111	0.75	85	P 2	TWD	28	VSM	+0.92	TEH	TEC			26	COLD	600UL
		0.39	107	P 2	TWD	18	VSM	+0.27	TEH	TEC			26	COLD	600UL
		0.39	107	P 2	TWD	18	VSM	+0.27	TEH	TEC			26	COLD	600UL
		0.75	85	P 2	TWD	28	VSM	+0.92	TEH	TEC			26	COLD	600UL
47	119	0.39	58	P 2	TWD	15	VSM	-0.67	TEH	TEC	NEW		20	COLD	600UL
47	125	0.43	39	P 2	TWD	18	VSM	-0.62	TEH	TEC			17	COLD	600UL
		1.55	76	P 2	TWD	39	VSM	+0.95	TEH	TEC			17	COLD	600UL
		1.56	79	P 2	TWD	39	VSM	+0.95	TEH	TEC			17	COLD	600UL
		0.48	45	P 2	TWD	20	VSM	-0.62	TEH	TEC			17	COLD	600UL
		0.20	83	P 2	TWD	10	DBC	+1.75	TEH	TEC	NEW		17	COLD	600UL
		0.48	119	P 2	TWD	21	VSM	-0.62	TEH	TEC			51	COLD	600UL
		1.15	117	P 2	TWD	35	VSM	+0.95	TEH	TEC			51	COLD	600UL
47	133	0.56	105	P 2	TWD	20	VSM	+0.78	TEC	TEH			25	HOT	600UL
		0.71	104	P 2	TWD	24	VSM	-0.81	TEC	TEH			25	HOT	600UL
		0.68	147	P 2	TWD	23	VSM	+0.02	TEC	TEH			25	HOT	600UL
		0.49	104	P 2	TWD	18	VSM	+0.78	TEC	TEH			25	HOT	600UL
		0.68	147	P 2	TWD	23	VSM	+0.02	TEC	TEH			25	HOT	600UL
		0.63	91	P 2	TWD	21	VSM	-0.81	TEC	TEH			25	HOT	600UL
47	147	0.85	83	P 2	TWD	26	VSM	+0.80	TEC	TEH			7	HOT	600UL
		1.12	107	P 2	TWD	31	VSM	-0.85	TEC	TEH			7	HOT	600UL
		0.85	84	P 2	TWD	26	VSM	+0.80	TEC	TEH			7	HOT	600UL
		1.12	107	P 2	TWD	31	VSM	-0.85	TEC	TEH			7	HOT	600UL
		0.86	87	P 2	TWD	30	VSM	-0.85	TEH	TEC			51	COLD	600UL
		0.70	79	P 2	TWD	26	VSM	+0.80	TEH	TEC			51	COLD	600UL
48	30	0.54	156	P 2	TWD	19	07H	+0.91	TEH	TEC			36	COLD	600UL
		0.57	158	P 2	TWD	20	07H	+0.91	TEH	TEC			36	COLD	600UL
48	120	0.39	147	P 2	TWD	18	VSM	+0.96	TEH	TEC			19	COLD	600UL
		0.33	56	P 2	TWD	16	VSM	-0.87	TEH	TEC			19	COLD	600UL
		0.41	141	P 2	TWD	19	VSM	+0.96	TEH	TEC			19	COLD	600UL
		0.33	56	P 2	TWD	16	VSM	-0.87	TEH	TEC			19	COLD	600UL
48	162	0.26	59	P 2	TWD	11	VSM	+0.87	TEC	TEH			17	HOT	600UL
		0.26	59	P 2	TWD	12	VSM	+0.87	TEC	TEH			17	HOT	600UL
49	49	0.50	156	P 2	TWD	18	08H	+1.61	TEH	TEC	LOCOK		11	COLD	600UL
		0.51	156	P 2	TWD	18	08H	+1.61	TEH	TEC	LOCOK		11	COLD	600UL
49	75	1.42	105	P 2	TWD	35	VSM	-0.74	TEH	TEC			5	COLD	600UL
		1.47	120	P 2	TWD	36	VSM	+0.02	TEH	TEC			5	COLD	600UL
		1.12	124	P 2	TWD	31	VSM	+0.78	TEH	TEC			5	COLD	600UL
		1.23	100	P 2	TWD	33	VSM	-0.74	TEH	TEC			47	COLD	600UL
		0.97	130	P 2	TWD	29	VSM	+0.78	TEH	TEC			47	COLD	600UL
		1.32	111	P 2	TWD	34	VSM	+0.02	TEH	TEC			47	COLD	600UL
		0.26	129	P 2	TWD	11	DBC	-1.83	TEH	TEC	NEW		47	COLD	600UL
		1.42	105	P 2	TWD	35	VSM	-0.74	TEH	TEC			5	COLD	600UL
		1.47	120	P 2	TWD	36	VSM	+0.02	TEH	TEC			5	COLD	600UL
		1.12	124	P 2	TWD	31	VSM	+0.78	TEH	TEC			5	COLD	600UL
		0.32	156	P 2	TWD	13	DBC	-2.12	TEH	TEC	NEW		5	COLD	600UL
		1.24	112	P 2	TWD	36	VSM	+0.02	TEH	TEC			6	COLD	600UL
		1.14	106	P 2	TWD	35	VSM	-0.74	TEH	TEC			6	COLD	600UL
		0.86	131	P 2	TWD	30	VSM	+0.78	TEH	TEC			6	COLD	600UL
49	77	0.61	150	P 2	TWD	21	DBH	-1.67	TEH	TEC			5	COLD	600UL
		0.22	13	P 2	TWD	10	DBH	+1.76	TEH	TEC			5	COLD	600UL
		0.62	154	P 2	TWD	21	DBH	-1.67	TEH	TEC			5	COLD	600UL
		0.23	19	P 2	TWD	10	DBH	+1.76	TEH	TEC			5	COLD	600UL

MAI, MCI, MMI, MVI, SAI, SCI, SVI, 0-100% twd

QUERY: QueryM3

ROW	LINE	VOLTS	DEG	CHN	IND	%TW	LOCATION		EXT	EXT	UTIL 1	UTIL 2	CAL #	LEG	PROBE
49	97	0.47	58	P 2	TWD	18	DBH	+1.46	TEH	TEC	NEW		13	COLD	600UL
49	99	0.99	61	P 2	TWD	30	DBH	-1.59	TEH	TEC			13	COLD	600UL
		0.99	61	P 2	TWD	30	DBH	-1.59	TEH	TEC			13	COLD	600UL
		0.84	116	P 2	TWD	29	DBH	-1.59	TEH	TEC			27	COLD	600UL
49	101	0.38	94	P 2	TWD	18	DBH	-1.70	TEH	TEC			27	COLD	600UL
		0.37	96	P 2	TWD	16	DBH	-1.70	TEH	TEC			27	COLD	600UL
49	123	0.57	112	P 2	TWD	22	08H	+1.64	TEH	TEC	LOCOK		17	COLD	600UL
		0.50	123	P 2	TWD	20	08H	+1.25	TEH	TEC			17	COLD	600UL
49	129	0.64	91	P 2	TWD	25	08H	-1.50	TEH	TEC	LOCOK		51	COLD	600UL
		0.64	91	P 2	TWD	25	08H	-1.50	TEH	TEC	LAR		51	COLD	600UL
50	18	0.56	70	P 2	TWD	20	VSM	-0.89	TEH	TEC			40	COLD	600UL
		0.26	146	P 2	TWD	10	VSM	+0.77	TEH	TEC			40	COLD	600UL
		0.52	70	P 2	TWD	20	VSM	-0.89	TEH	TEC			40	COLD	600UL
		0.26	146	P 2	TWD	11	VSM	+0.77	TEH	TEC			40	COLD	600UL
50	20	0.63	118	P 2	TWD	22	VSM	+0.21	TEH	TEC			38	COLD	600UL
		0.55	138	P 2	TWD	20	VSM	+0.66	TEH	TEC			38	COLD	600UL
		0.63	118	P 2	TWD	22	VSM	+0.21	TEH	TEC			38	COLD	600UL
		0.55	138	P 2	TWD	20	VSM	+0.66	TEH	TEC			38	COLD	600UL
50	22	0.88	139	P 2	TWD	31	VSM	-0.71	TEH	TEC			39	COLD	600UL
		0.65	124	P 2	TWD	26	VSM	+0.99	TEH	TEC			39	COLD	600UL
		0.65	127	P 2	TWD	27	VSM	+0.99	TEH	TEC			39	COLD	600UL
		0.84	147	P 2	TWD	31	VSM	-0.71	TEH	TEC			39	COLD	600UL
		0.49	108	P 2	TWD	32	VSM	+0.99	TEH	TEC			47	COLD	600UL
		0.61	117	P 2	TWD	21	VSM	-0.71	TEH	TEC			47	COLD	600UL
50	62	0.61	88	P 2	TWD	22	08H	-1.25	TEH	TEC	NEW		9	COLD	600UL
50	66	0.51	56	P 2	TWD	20	08H	+1.25	TEH	TEC	NEW		8	COLD	600UL
50	78	0.37	118	P 2	TWD	15	DBH	-1.32	TEH	TEC			14	COLD	600UL
		0.37	119	P 2	TWD	15	DBH	-1.32	TEH	TEC			14	COLD	600UL
50	98	0.53	127	P 2	TWD	20	DBH	-1.92	TEH	TEC			14	COLD	600UL
		0.54	127	P 2	TWD	20	DBH	-1.92	TEH	TEC			14	COLD	600UL
		0.52	69	P 2	TWD	20	DBC	-1.54	TEH	TEC	NEW		14	COLD	600UL
50	114	0.78	87	P 2	TWD	28	VSM	-0.78	TEH	TEC			26	COLD	600UL
		0.80	119	P 2	TWD	29	VSM	+0.84	TEH	TEC			26	COLD	600UL
		0.80	119	P 2	TWD	29	VSM	+0.84	TEH	TEC			26	COLD	600UL
		0.78	87	P 2	TWD	28	VSM	-0.78	TEH	TEC			26	COLD	600UL
50	118	0.35	137	P 2	TWD	14	08H	+1.00	TEH	TEC			20	COLD	600UL
		0.32	157	P 2	TWD	13	08H	+1.00	TEH	TEC			20	COLD	600UL
50	120	0.54	93	P 2	TWD	20	08H	+1.25	TEH	TEC			20	COLD	600UL
		0.60	114	P 2	TWD	22	08H	+1.25	TEH	TEC			20	COLD	600UL
51	45	0.18	164	P 2	TWD	10	DBH	-1.12	TEH	TEC	NEW		31	COLD	600UL
51	93	0.66	19	P 2	TWD	23	DBH	+1.75	TEH	TEC			14	COLD	600UL
		0.66	19	P 2	TWD	23	DBH	+1.75	TEH	TEC			14	COLD	600UL
51	99	0.41	81	P 2	TWD	17	DBH	-1.98	TEH	TEC			14	COLD	600UL
		0.41	84	P 2	TWD	17	DBH	-1.98	TEH	TEC			14	COLD	600UL
51	101	0.38	143	P 2	TWD	18	DBH	-1.95	TEH	TEC			27	COLD	600UL
		0.54	70	P 2	TWD	22	DBH	-1.95	TEH	TEC			27	COLD	600UL
51	109	0.54	87	P 2	TWD	22	08H	+0.98	TEH	TEC			25	COLD	600UL
		0.54	87	P 2	TWD	22	08H	+0.98	TEH	TEC			25	COLD	600UL
51	117	0.44	155	P 2	TWD	20	DBC	+1.90	TEH	TEC	NEW		26	COLD	600UL
51	129	0.34	100	P 2	TWD	15	08H	+0.75	TEH	TEC			15	COLD	600UL
		0.34	100	P 2	TWD	15	08H	+0.75	TEH	TEC			15	COLD	600UL
52	76	0.28	81	P 2	TWD	14	DBC	-1.72	TEH	TEC			6	COLD	600UL
		0.28	82	P 2	TWD	14	DBC	-1.72	TEH	TEC			6	COLD	600UL

MAI, MCI, MMI, MVI, SAI, SCI, SVI, 0-100% twd

QUERY: QueryM3

ROW	LINE	VOLTS	DEG	CHN	IND	%TW	LOCATION		EXT	EXT	UTIL	1 UTIL	2 CAL #	LEG	PROBE
52	78	0.32	17	P 2	TWD	13	DBH	+1.42	TEH	TEC	NEW		13	COLD	600UL
52	80	0.57	132	P 2	TWD	21	DBH	-1.90	TEH	TEC			14	COLD	600UL
		0.56	132	P 2	TWD	21	DBH	-1.90	TEH	TEC			14	COLD	600UL
		0.24	147	P 2	TWD	11	DBC	-1.63	TEH	TEC	NEW		14	COLD	600UL
52	82	0.96	48	P 2	TWD	29	DBH	-1.69	TEH	TEC			13	COLD	600UL
		0.94	49	P 2	TWD	29	DBH	-1.69	TEH	TEC			13	COLD	600UL
		0.78	16	P 2	TWD	25	DBC	+2.25	TEH	TEC	NEW		13	COLD	600UL
52	94	0.48	19	P 2	TWD	18	DBH	+1.72	TEH	TEC			13	COLD	600UL
		0.48	19	P 2	TWD	18	DBH	+1.72	TEH	TEC			13	COLD	600UL
		0.30	116	P 2	TWD	12	DBC	-1.27	TEH	TEC	NEW		13	COLD	600UL
52	100	0.42	37	P 2	TWD	19	DBC	-1.85	TEH	TEC			27	COLD	600UL
		0.42	37	P 2	TWD	18	DBC	-1.85	TEH	TEC			27	COLD	600UL
52	122	0.37	150	P 2	TWD	15	VC3	-0.87	TEH	TEC	NEW		20	COLD	600UL
52	124	0.46	114	P 2	TWD	19	07H	+0.29	TEH	TEC			17	COLD	600UL
		0.94	112	P 2	TWD	31	08H	+0.83	TEH	TEC			17	COLD	600UL
		0.47	115	P 2	TWD	19	07H	+0.29	TEH	TEC			17	COLD	600UL
		0.94	114	P 2	TWD	30	08H	+0.83	TEH	TEC			17	COLD	600UL
		0.45	102	P 2	TWD	20	07H	+0.29	TEH	TEC			51	COLD	600UL
		0.65	92	P 2	TWD	25	08H	+0.83	TEH	TEC			51	COLD	600UL
53	43	0.29	67	P 2	TWD	14	DBC	+1.75	TEH	TEC	NEW		31	COLD	600UL
53	47	0.24	62	P 2	TWD	10	03C	+0.89	TEH	TEC			11	COLD	600UL
53	73	0.23	130	P 2	TWD	10	DBC	+2.02	TEH	TEC	NEW		7	COLD	600UL
53	77	0.74	121	P 2	TWD	27	DBH	-1.70	TEH	TEC			6	COLD	600UL
		0.80	129	P 2	TWD	29	DBH	-1.70	TEH	TEC			6	COLD	600UL
53	81	0.59	85	P 2	TWD	21	DBC	-1 42	TEH	TEC			13	COLD	600UL
		0.59	85	P 2	TWD	21	DBC	-1.42	TEH	TEC			13	COLD	600UL
53	83	0.92	103	P 2	TWD	28	DBH	-1.46	TEH	TEC			13	COLD	600UL
		0.89	110	P 2	TWD	28	DBH	-1.46	TEH	TEC			13	COLD	600UL
53	91	0.25	168	P 2	TWD	10	DBH	-2.25	TEH	TEC	NEW		13	COLD	600UL
		0.31	107	P 2	TWD	13	DBH	+1.75	TEH	TEC	NEW		13	COLD	600UL
53	93	0.50	58	P 2	TWD	19	DBH	-1.70	TEH	TEC			13	COLD	600UL
		0.50	58	P 2	TWD	19	DBH	-1.70	TEH	TEC			13	COLD	600UL
53	95	0.54	98	P 2	TWD	20	DBC	-1.70	TEH	TEC			13	COLD	600UL
		0.54	98	P 2	TWD	20	DBC	-1.70	TEH	TEC			13	COLD	600UL
		0.23	144	P 2	TWD	9	DBH	+1.82	TEH	TEC	NEW		13	COLD	600UL
53	97	0.45	43	P 2	TWD	17	DBH	-1.76	TEH	TEC			13	COLD	600UL
		0.23	151	P 2	TWD	9	DBH	-1.76	TEH	TEC			13	COLD	600UL
53	101	0.27	146	P 2	TWD	14	DBH	-1.65	TEH	TEC			27	COLD	600UL
		0.27	146	P 2	TWD	14	DBH	-1.65	TEH	TEC			27	COLD	600UL
54	8	0.36	90	P 2	TWD	15	02C	-0.93	TEH	TEC			42	COLD	600UL
54	42	0.48	63	P 2	TWD	19	02H	-1.10	TEH	TEC			32	COLD	600UL
54	78	0.45	40	P 2	TWD	18	DBH	-1.26	TEH	TEC	NEW		14	COLD	600UL
54	88	1.54	83	P 2	TWD	37	DBH	-1.54	TEH	TEC			13	COLD	600UL
		1.08	45	P 2	TWD	31	DBC	-1.86	TEH	TEC			13	COLD	600UL
		0.25	19	P 2	TWD	10	DBH	+1.75	TEH	TEC			13	COLD	600UL
		1.12	44	P 2	TWD	32	DBC	-1.86	TEH	TEC			13	COLD	600UL
		0.25	19	P 2	TWD	10	DBH	+1.75	TEH	TEC			13	COLD	600UL
		1.54	83	P 2	TWD	37	DBH	-1.54	TEH	TEC			13	COLD	600UL
		0.35	25	P 2	TWD	14	DBH	+1.75	TEH	TEC			47	COLD	600UL
		1.04	41	P 2	TWD	30	DBC	-1.86	TEH	TEC			47	COLD	600UL
		1.36	88	P 2	TWD	34	DBH	-1.54	TEH	TEC			47	COLD	600UL
54	90	4.42	55	P 2	TWD	71	DBC	+1.89	TEH	TEC			57	COLD	600UL

MAI, MCI, MMI, MVI, SAI, SCI, SVI, 0-100% twd

QUERY: QueryM3

ROW	LINE	VOLTS	DEG	CHN	IND	%TW	LOCATION		EXT	EXT	UTIL 1	UTIL 2	CAL #	LEG	PROBE
		0.70	84	P 2	TWD	24	DBH	-1.50	TEH	TEC			14	COLD	600UL
		0.25	41	P 2	TWD	11	DBC	-1.91	TEH	TEC			14	COLD	600UL
		0.70	84	P 2	TWD	24	DBH	-1.50	TEH	TEC			14	COLD	600UL
		0.27	38	P 2	TWD	12	DBC	-1.91	TEH	TEC			14	COLD	600UL
		4.20	50	P 2	TWD	52	DBC	+1.89	TEH	TEC			14	COLD	600UL
		4.42	55	P 2	TWD	72	DBC	+1.89	TEH	TEC			57	COLD	600UL
		0.78	85	P 2	TWD	28	DBH	-1.50	TEH	TEC			57	COLD	600UL
		0.34	89	P 2	TWD	14	DBC	-1.91	TEH	TEC			57	COLD	600UL
54	92	1.88	91	P 2	TWD	41	DBH	-1.46	TEH	TEC			13	COLD	600UL
		0.14	31	P 2	TWD	6	DBH	+2.25	TEH	TEC	LAR		13	COLD	600UL
		1.84	87	P 2	TWD	40	DBH	-1.46	TEH	TEC			13	COLD	600UL
		0.19	12	P 2	TWD	8	DBH	+2.25	TEH	TEC			13	COLD	600UL
		1.52	107	P 2	TWD	39	DBH	-1.46	TEH	TEC			27	COLD	600UL
		0.15	35	P 2	TWD	6	DBH	+2.25	TEH	TEC			27	COLD	600UL
54	96	1.18	151	P 2	TWD	33	DBC	+1.86	TEH	TEC			14	COLD	600UL
		1.24	150	P 2	TWD	34	DBC	+1.86	TEH	TEC			14	COLD	600UL
		1.12	170	P 2	TWD	34	DBC	+1.86	TEH	TEC			27	COLD	600UL
54	100	0.73	18	P 2	TWD	27	DBH	+1.99	TEH	TEC	NEW		27	COLD	600UL
54	102	0.45	142	P 2	TWD	20	DBC	+1.86	TEH	TEC			26	COLD	600UL
		0.32	128	P 2	TWD	15	DBC	-1.70	TEH	TEC			26	COLD	600UL
		0.45	142	P 2	TWD	20	DBC	+1.86	TEH	TEC			26	COLD	600UL
		0.29	149	P 2	TWD	14	DBC	-1.70	TEH	TEC			26	COLD	600UL
54	158	0.31	116	P 2	TWD	15	VSM	+0.73	TEC	TEH			18	HOT	600UL
		0.31	116	P 2	TWD	15	VSM	+0.73	TEC	TEH			18	HOT	600UL
55	9	0.31	105	P 2	TWD	14	02C	+0.14	TEH	TEC			42	COLD	600UL
55	85	0.63	32	P 2	TWD	23	DBH	+1.78	TEH	TEC			14	COLD	600UL
		0.69	33	P 2	TWD	24	DBH	+1.78	TEH	TEC			14	COLD	600UL
55	87	0.35	13	P 2	TWD	15	DBH	+1.65	TEH	TEC	NEW		14	COLD	600UL
55	89	0.41	128	P 2	TWD	17	DBH	-1.97	TEH	TEC			14	COLD	600UL
		0.41	128	P 2	TWD	17	DBH	-1.97	TEH	TEC			14	COLD	600UL
55	95	0.34	101	P 2	TWD	14	DBH	-1.86	TEH	TEC			14	COLD	600UL
		0.32	124	P 2	TWD	14	DBH	-1.86	TEH	TEC			14	COLD	600UL
55	99	0.42	69	P 2	TWD	17	DBH	-1.47	TEH	TEC			14	COLD	600UL
		0.42	39	P 2	TWD	17	DBH	-1.47	TEH	TEC			14	COLD	600UL
55	107	0.35	119	P 2	TWD	16	DBH	-1.52	TEH	TEC			26	COLD	600UL
		0.32	120	P 2	TWD	15	DBH	-1.52	TEH	TEC			26	COLD	600UL
55	145	0.38	135	P 2	TWD	15	VH3	-0.90	TEC	TEH	NEW		7	HOT	600UL
56	76	0.60	99	P 2	TWD	24	VSM	+0.62	TEH	TEC			6	COLD	600UL
		0.60	114	P 2	TWD	24	VSM	+0.62	TEH	TEC			6	COLD	600UL
56	80	0.66	135	P 2	TWD	23	DBH	-1.94	TEH	TEC			14	COLD	600UL
		0.66	135	P 2	TWD	23	DBH	-1.94	TEH	TEC			14	COLD	600UL
56	82	0.69	133	P 2	TWD	24	DBH	-1.86	TEH	TEC			14	COLD	600UL
		0.69	133	P 2	TWD	24	DBH	-1.86	TEH	TEC			14	COLD	600UL
56	90	0.94	11	P 2	TWD	25	DBC	+2.14	TEH	TEC	NEW		13	COLD	600UL
56	96	0.27	76	P 2	TWD	11	DBH	-1.80	TEH	TEC	NEW		13	COLD	600UL
		0.48	53	P 2	TWD	18	DBC	+2.25	TEH	TEC	NEW		13	COLD	600UL
56	136	0.49	124	P 2	TWD	19	VSM	-0.79	TEC	TEH			1	HOT	600UL
		0.32	133	P 2	TWD	14	VSM	+0.79	TEC	TEH			1	HOT	600UL
		0.32	131	P 2	TWD	14	VSM	+0.79	TEC	TEH			1	HOT	600UL
		0.49	124	P 2	TWD	20	VSM	-0.79	TEC	TEH			1	HOT	600UL
56	146	0.43	43	P 2	TWD	16	VH3	-0.90	TEC	TEH	NEW		7	HOT	600UL
57	47	0.36	126	P 2	TWD	14	08H	+0.51	TEH	TEC			11	COLD	600UL
		0.36	126	P 2	TWD	14	08H	+0.51	TEH	TEC			11	COLD	600UL

MAI, MCI, MMI, MVI, SAI, SCI, SVI, 0-100% twd

QUERY: QueryM3

ROW	LINE	VOLTS	DEG	CHN	IND	%TW	LOCATION		EXT	EXT	UTIL 1	UTIL 2	CAL #	LEG	PROBE
57	51	0.35	135	P 2	TWD	13	08H	+0.95	TEH	TEC	NEW		11	COLD	600UL
		0.25	129	P 2	TWD	10	08H	+0.32	TEH	TEC	NEW		11	COLD	600UL
57	79	0.39	39	P 2	TWD	15	DBH	+1.57	TEH	TEC	NEW		13	COLD	600UL
57	83	0.55	36	P 2	TWD	20	DBH	-1.70	TEH	TEC			13	COLD	600UL
		0.42	33	P 2	TWD	16	DBH	-1.70	TEH	TEC			13	COLD	600UL
		0.27	19	P 2	TWD	11	DBH	+1.61	TEH	TEC	NEW		13	COLD	600UL
57	87	0.55	90	P 2	TWD	20	DBC	-2.06	TEH	TEC			13	COLD	600UL
		0.53	104	P 2	TWD	20	DBC	-2.06	TEH	TEC			13	COLD	600UL
57	89	0.22	114	P 2	TWD	9	DBH	-2.01	TEH	TEC	NEW		13	COLD	600UL
57	123	0.69	65	P 2	TWD	25	VH3	-0.75	TEH	TEC			17	COLD	600UL
		0.70	69	P 2	TWD	25	VH3	-0.75	TEH	TEC			17	COLD	600UL
57	129	0.28	143	P 2	TWD	13	DBH	+0.00	TEH	TEC			51	COLD	600UL
		0.28	143	P 2	TWD	13	DBH	+0.00	TEH	TEC			51	COLD	600UL
57	143	0.52	78	P 2	TWD	20	VH3	+0.99	TEC	TEH			1	HOT	600UL
		0.52	78	P 2	TWD	21	VH3	+0.99	TEC	TEH			1	HOT	600UL
57	157	0.22	45	P 2	TWD	9	VSM	-0.85	TEC	TEH			17	HOT	600UL
		0.22	45	P 2	TWD	10	VSM	-0.85	TEC	TEH			17	HOT	600UL
58	86	0.54	93	P 2	TWD	20	DBH	-1.89	TEH	TEC			14	COLD	600UL
		0.54	93	P 2	TWD	20	DBH	-1.89	TEH	TEC			14	COLD	600UL
58	90	0.30	144	P 2	TWD	13	DBC	+1.22	TEH	TEC			14	COLD	600UL
		0.32	140	P 2	TWD	14	DBC	+1.22	TEH	TEC			14	COLD	600UL
		0.15	93	P 2	TWD	7	DBH	-1.35	TEH	TEC	NEW		14	COLD	600UL
58	94	0.74	126	P 2	TWD	25	DBC	-1.71	TEH	TEC			14	COLD	600UL
		0.75	126	P 2	TWD	25	DBC	-1.71	TEH	TEC			14	COLD	600UL
58	126	0.30	138	P 2	TWD	13	VSM	-0.78	TEH	TEC	NEW		18	COLD	600UL
58	148	0.53	60	P 2	TWD	22	VSM	+0.77	TEC	TEH			8	HOT	600UL
		0.52	133	P 2	TWD	22	VC3	-0.81	TEC	TEH			8	HOT	600UL
		0.52	133	P 2	TWD	22	VC3	-0.81	TEC	TEH			8	HOT	600UL
		0.53	60	P 2	TWD	22	VSM	+0.77	TEC	TEH			8	HOT	600UL
58	162	0.27	42	P 2	TWD	14	VH3	-0.80	TEC	TEH			18	HOT	600UL
		0.33	22	P 2	TWD	16	VH3	-0 80	TEC	TEH			18	HOT	600UL
58	166	0.37	45	P 2	TWD	17	VH3	-0.68	TEC	TEH			18	HOT	600UL
		0.38	27	P 2	TWD	18	VH3	-0.68	TEC	TEH			18	HOT	600UL
59	33	0.36	150	P 2	TWD	14	VH3	-0.83	TEH	TEC	NEW		36	COLD	600UL
59	81	0.53	35	P 2	TWD	20	DBH	+1.80	TEH	TEC			14	COLD	600UL
		0.53	35	P 2	TWD	20	DBH	+1.80	TEH	TEC			14	COLD	600UL
59	85	0.80	112	P 2	TWD	27	DBC	-1.74	TEH	TEC			14	COLD	600UL
		0.83	99	P 2	TWD	27	DBC	-1.74	TEH	TEC			14	COLD	600UL
59	95	0.59	87	P 6	TWD	28	DBC	+1.71	DBC	DBC	LAR		198	HOT	560FH
59	97	0.16	165	P 2	TWD	8	DBC	-2.01	TEH	TEC	NEW		14	COLD	600UL
60	48	0.50	120	P 2	TWD	21	08H	-0.88	TEH	TEC			12	COLD	600UL
		0.50	119	P 2	TWD	20	08H	-0.88	TEH	TEC			12	COLD	600UL
60	50	0.42	61	P 2	TWD	15	08H	-0.40	TEH	TEC			11	COLD	600UL
		0.40	58	P 2	TWD	15	08H	-0.40	TEH	TEC			11	COLD	600UL
60	54	0.32	120	P 2	TWD	13	08H	+0.93	TEH	TEC	NEW		9	COLD	600UL
60	88	0.57	46	P 2	TWD	21	DBH	-1.28	TEH	TEC			14	COLD	600UL
		0.58	46	P 2	TWD	21	DBH	-1.28	TEH	TEC			14	COLD	600UL
60	92	0.53	142	P 2	TWD	19	DBH	-1.49	TEH	TEC			13	COLD	600UL
		0.56	128	P 2	TWD	20	DBH	-1.49	TEH	TEC			13	COLD	600UL

MAI, MCI, MMI, MVI, SAI, SCI, SVI, 0-100% twd

QUERY: QueryM3

ROW	LINE	VOLTS	DEG	CHN	IND	%TW	LOCATION		EXT	EXT	UTIL 1	UTIL 2	CAL #	LEG	PROBE
60	94	0.47	21	P 2	TWD	18	DBH	+1.76	TEH	TEC	NEW		13	COLD	600UL
60	164	0.23	149	P 2	TWD	12	VH3	-1.09	TEC	TEH			18	HOT	600UL
		0.29	138	P 2	TWD	14	08C	+0.82	TEC	TEH			18	HOT	600UL
		0.26	38	P 2	TWD	13	DBC	+1.56	TEC	TEH			18	HOT	600UL
		0.26	38	P 2	TWD	13	DBC	+1.56	TEC	TEH			18	HOT	600UL
		0.33	131	P 2	TWD	16	VH3	-1.09	TEC	TEH			18	HOT	600UL
		0.29	138	P 2	TWD	14	08C	+0.82	TEC	TEH			18	HOT	600UL
61	25	0.40	105	P 2	TWD	17	VH3	-0.83	TEH	TEC			36	COLD	600UL
		0.36	53	P 2	TWD	14	VH3	-0.83	TEH	TEC			36	COLD	600UL
61	79	0.36	26	P 2	TWD	14	DBH	+1.59	TEH	TEC	NEW		13	COLD	600UL
61	85	0.65	68	P 2	TWD	23	DBC	-1.93	TEH	TEC			13	COLD	600UL
		0.62	52	P 2	TWD	22	DBC	-1.93	TEH	TEC			13	COLD	600UL
61	153	0.38	129	P 2	TWD	14	VC3	-1.15	TEC	TEH			11	HOT	600UL
		0.36	130	P 2	TWD	14	VC3	-1.15	TEC	TEH			11	HOT	600UL
61	155	0.26	111	P 2	TWD	11	VH3	-1.11	TEC	TEH			17	HOT	600UL
		0.26	111	P 2	TWD	12	VH3	-1.11	TEC	TEH			17	HOT	600UL
61	157	0.23	117	P 2	TWD	10	02H	-1.04	TEC	TEH			17	HOT	600UL
62	50	0.64	82	P 2	TWD	24	08H	-0.15	TEH	TEC			12	COLD	600UL
		0.62	81	P 2	TWD	24	08H	-0.15	TEH	TEC			12	COLD	600UL
62	78	0.33	25	P 2	TWD	14	DBH	+1.84	TEH	TEC	NEW		14	COLD	600UL
62	88	0.64	50	P 2	TWD	22	DBH	-1.42	TEH	TEC			13	COLD	600UL
		0.53	105	P 2	TWD	19	DBH	-1.42	TEH	TEC			13	COLD	600UL
62	92	0.30	101	P 2	TWD	13	02H	-1.25	TEH	TEC			14	COLD	600UL
62	96	0.36	150	P 2	TWD	15	DBH	+2.15	TEH	TEC			14	COLD	600UL
		0.36	150	P 2	TWD	15	DBH	+2.15	TEH	TEC			14	COLD	600UL
62	154	0.40	134	P 2	TWD	18	VH3	-0.88	TEC	TEH			12	HOT	600UL
		0.35	139	P 2	TWD	16	VH3	-0.88	TEC	TEH			12	HOT	600UL
62	160	0.21	11	P 2	TWD	9	DBH	-1.85	TEC	TEH			17	HOT	600UL
		0.21	11	P 2	TWD	10	DBH	-1.85	TEC	TEH			17	HOT	600UL
62	162	0.23	80	P 2	TWD	12	VH3	-1.01	TEC	TEH			18	HOT	600UL
		0.28	122	P 2	TWD	14	VH3	-1.01	TEC	TEH			18	HOT	600UL
62	166	0.24	157	P 2	TWD	12	VH3	-1.07	TEC	TEH			18	HOT	600UL
		0.32	132	P 2	TWD	15	02H	-0.31	TEC	TEH			18	HOT	600UL
		0.39	101	P 2	TWD	18	02H	-0.86	TEC	TEH			18	HOT	600UL
		0.25	145	P 2	TWD	13	VH3	-1.07	TEC	TEH			18	HOT	600UL
63	53	0.50	120	P 2	TWD	20	08H	+0.41	TEH	TEC			12	COLD	600UL
		0.52	118	P 2	TWD	21	08H	+0.41	TEH	TEC			12	COLD	600UL
63	81	0.24	21	P 2	TWD	11	DBH	+1.78	TEH	TEC	NEW		14	COLD	600UL
63	83	0.66	66	P 2	TWD	23	DBC	+1.52	TEH	TEC			14	COLD	600UL
		0.69	85	P 2	TWD	24	DBC	+1.52	TEH	TEC			14	COLD	600UL
63	85	0.46	94	P 2	TWD	18	DBH	+1.76	TEH	TEC	NEW		14	COLD	600UL
64	42	0.40	129	P 2	TWD	18	VH3	-0.79	TEH	TEC	NEW		31	COLD	600UL
64	82	0.31	147	P 2	TWD	13	DBH	-1.54	TEH	TEC			14	COLD	600UL
		0.32	144	P 2	TWD	14	DBH	-1.54	TEH	TEC			14	COLD	600UL
64	96	0.42	11	P 2	TWD	16	DBC	+2.00	TEH	TEC	NEW		13	COLD	600UL
64	158	0.27	103	P 2	TWD	11	VH3	-0.93	TEC	TEH			17	HOT	600UL
		0.32	111	P 2	TWD	14	VH3	-0.93	TEC	TEH			17	HOT	600UL
64	166	0.33	25	P 2	TWD	14	07H	+0.63	TEC	TEH			17	HOT	600UL
		0.33	24	P 2	TWD	15	07H	+0.63	TEC	TEH			17	HOT	600UL

MAI, MCI, MMI, MVI, SAI, SCI, SVI, 0-100% twd

QUERY: QueryM3

ROW	LINE	VOLTS	DEG	CHN	IND	%TW	LOCATION		EXT	EXT	UTIL 1	UTIL 2	CAL #	LEG	PROBE
65	27	0.52	44	P 2	TWD	21	VC3	-0.87	TEH	TEC			36	COLD	600UL
		0.86	130	P 2	TWD	26	VSM	-0.85	TEH	TEC			36	COLD	600UL
		0.86	130	P 2	TWD	26	VSM	-0.85	TEH	TEC			36	COLD	600UL
		0.50	38	P 2	TWD	18	VC3	-0.87	TEH	TEC			36	COLD	600UL
65	49	0.45	155	P 2	TWD	16	VH3	-0.76	TEH	TEC			11	COLD	600UL
		0.26	113	P 2	TWD	10	VH3	+0.85	TEH	TEC			11	COLD	600UL
		0.45	155	P 2	TWD	16	VH3	-0.76	TEH	TEC			11	COLD	600UL
		0.26	113	P 2	TWD	10	VH3	+0.85	TEH	TEC			11	COLD	600UL
65	53	0.29	92	P 2	TWD	11	08H	-0.56	TEH	TEC			11	COLD	600UL
		0.29	92	P 2	TWD	11	08H	-0.56	TEH	TEC			11	COLD	600UL
65	59	0.73	128	P 2	TWD	26	VSM	-0.77	TEH	TEC			10	COLD	600UL
		0.39	147	P 2	TWD	17	VSM	+0.84	TEH	TEC			10	COLD	600UL
		0.39	149	P 2	TWD	17	VSM	+0.84	TEH	TEC			10	COLD	600UL
		0.73	128	P 2	TWD	26	VSM	-0.77	TEH	TEC			10	COLD	600UL
65	87	0.40	54	P 2	TWD	15	DBH	+1.72	TEH	TEC			13	COLD	600UL
		0.33	34	P 2	TWD	13	DBH	+1.72	TEH	TEC			13	COLD	600UL
65	91	0.62	23	P 2	TWD	22	DBH	+1.99	TEH	TEC			13	COLD	600UL
		0.71	23	P 2	TWD	24	DBH	+1.99	TEH	TEC			13	COLD	600UL
65	97	0.20	57	P 2	TWD	8	DBC	-1.89	TEH	TEC	NEW		13	COLD	600UL
65	131	0.56	36	P 2	TWD	22	02H	-1.25	TEC	TEH			2	HOT	600UL
65	143	0.38	91	P 2	TWD	16	VH3	-0.81	TEC	TEH	NEW		1	HOT	600UL
65	151	0.51	124	P 2	TWD	18	VSM	+0.86	TEC	TEH			11	HOT	600UL
		0.25	58	P 2	TWD	11	VSM	+0.15	TEC	TEH			11	HOT	600UL
		0.35	15	P 2	TWD	14	VSM	-0.94	TEC	TEH			11	HOT	600UL
		0.51	124	P 2	TWD	18	VSM	+0.86	TEC	TEH			11	HOT	600UL
		0.43	26	P 2	TWD	15	VSM	-0.94	TEC	TEH			11	HOT	600UL
		0.25	55	P 2	TWD	9	VSM	+0.15	TEC	TEH			11	HOT	600UL
66	28	0.42	144	P 2	TWD	18	VH3	-0.95	TEH	TEC			36	COLD	600UL
		0.38	100	P 2	TWD	15	VH3	-0.95	TEH	TEC			36	COLD	600UL
66	60	0.80	143	P 2	TWD	26	VSM	+0.85	TEH	TEC			9	COLD	600UL
		0.44	114	P 2	TWD	17	VSM	-0.68	TEH	TEC			9	COLD	600UL
		0.59	36	P 2	TWD	21	01H	+0.87	TEH	TEC			9	COLD	600UL
		0.44	114	P 2	TWD	17	VSM	-0.68	TEH	TEC			9	COLD	600UL
		0.80	143	P 2	TWD	26	VSM	+0.85	TEH	TEC			9	COLD	600UL
66	82	0.29	79	P 2	TWD	12	DBH	-1.63	TEH	TEC			13	COLD	600UL
		0.36	120	P 2	TWD	14	VH3	+0.87	TEH	TEC			13	COLD	600UL
		0.19	40	P 2	TWD	8	DBH	-1.63	TEH	TEC			13	COLD	600UL
		0.30	145	P 2	TWD	12	VH3	+0.87	TEH	TEC			13	COLD	600UL
66	164	0.47	125	P 2	TWD	20	VH3	-0.85	TEC	TEH			17	HOT	600UL
		0.47	125	P 2	TWD	20	VH3	-0.85	TEC	TEH			17	HOT	600UL
67	33	0.51	151	P 2	TWD	18	VC3	+0.96	TEH	TEC	NEW		36	COLD	600UL
67	39	0.20	24	P 2	TWD	11	DBC	-1.75	TEH	TEC	NEW		31	COLD	600UL
67	55	0.31	132	P 2	TWD	14	08H	+0.78	TEH	TEC			10	COLD	600UL
		0.31	132	P 2	TWD	14	08H	+0.78	TEH	TEC			10	COLD	600UL
67	87	0.24	109	P 2	TWD	11	DBC	-1.91	TEH	TEC			14	COLD	600UL
		0.27	39	P 2	TWD	12	DBC	-1.91	TEH	TEC			14	COLD	600UL
		0.36	95	P 2	TWD	15	DBH	+1.76	TEH	TEC	NEW		14	COLD	600UL
67	97	0.25	122	2	SAI		TSH	+1.17	TSH	TSH	0.0	8.40	71	HOT	580PP
		0.15	24	P 2	TWD	7	DBC	-2.03	TEH	TEC	NEW		14	COLD	600UL
67	145	0.64	135	P 2	TWD	22	VC3	+1.14	TEC	TEH	NEW		7	HOT	600UL
67	155	0.33	117	P 2	TWD	16	VSM	+0.79	TEC	TEH			18	HOT	600UL
		0.33	117	P 2	TWD	16	VSM	+0.79	TEC	TEH			18	HOT	600UL
67	159	0.21	133	P 2	TWD	11	VH3	-0.81	TEC	TEH			18	HOT	600UL
		0.21	133	P 2	TWD	11	VH3	-0.81	TEC	TEH			18	HOT	600UL

MAI, MCI, MMI, MVI, SAI, SCI, SVI, 0-100% twd

QUERY: QueryM3

ROW	LINE	VOLTS	DEG	CHN	IND	%TW	LOCATION		EXT	EXT	UTIL 1	UTIL 2	CAL #	LEG	PROBE
67	165	0.84	111	P 2	TWD	28	01C	-0.14	TEC	TEH			17	HOT	600UL
68	12	0.52	116	P 2	TWD	21	02C	+0.00	TEH	TEC			41	COLD	600UL
68	22	0.41	91	P 2	TWD	16	VH3	-0.81	TEH	TEC	NEW		36	COLD	600UL
68	54	0.38	75	P 2	TWD	14	08H	+0.53	TEH	TEC			11	COLD	600UL
		0.38	65	P 2	TWD	14	08H	+0.53	TEH	TEC			11	COLD	600UL
68	88	0.22	48	P 2	TWD	10	DBH	-1.67	TEH	TEC			14	COLD	600UL
		0.22	47	P 2	TWD	10	DBH	-1.67	TEH	TEC			14	COLD	600UL
68	92	0.24	149	P 2	TWD	10	DBH	-1.57	TEH	TEC	NEW		13	COLD	600UL
68	132	0.57	83	P 2	TWD	21	VC3	+0.75	TEC	TEH			1	HOT	600UL
		0.59	84	P 2	TWD	22	VC3	+0.75	TEC	TEH			1	HOT	600UL
68	150	0.61	121	P 2	TWD	20	VH3	-0.86	TEC	TEH	NEW		11	HOT	600UL
68	158	0.38	124	P 2	TWD	16	VH3	-0.92	TEC	TEH			17	HOT	600UL
		0.38	123	P 2	TWD	16	VH3	-0.92	TEC	TEH			17	HOT	600UL
68	160	0.49	130	P 2	TWD	21	VH3	-0.93	TEC	TEH	NEW		18	HOT	600UL
68	164	0.47	70	P 2	TWD	20	VH3	-0.76	TEC	TEH			18	HOT	600UL
		0.41	110	P 2	TWD	19	01C	+0.88	TEC	TEH			18	HOT	600UL
		0.37	88	P 2	TWD	17	01C	-0.18	TEC	TEH			18	HOT	600UL
		0.47	70	P 2	TWD	20	VH3	-0.76	TEC	TEH			18	HOT	600UL
69	55	0.38	121	P 2	TWD	15	08H	+0.83	TEH	TEC			9	COLD	600UL
		0.38	121	P 2	TWD	15	08H	+0.83	TEH	TEC			9	COLD	600UL
69	65	0.43	137	P 2	TWD	17	VC3	-0.68	TEH	TEC			7	COLD	600UL
		0.31	49	P 2	TWD	13	VC3	+0.19	TEH	TEC			7	COLD	600UL
		0.45	148	P 2	TWD	18	VC3	-0.68	TEH	TEC			7	COLD	600UL
		0.36	60	P 2	TWD	15	VC3	+0.19	TEH	TEC			7	COLD	600UL
69	127	0.39	119	P 2	TWD	17	VC3	-0.72	TEH	TEC			17	COLD	600UL
		0.44	109	P 2	TWD	18	VC3	-0.72	TEH	TEC			17	COLD	600UL
69	155	0.25	119	P 2	TWD	10	VH3	-0.90	TEC	TEH			17	HOT	600UL
		0.25	113	P 2	TWD	12	VH3	-0.90	TEC	TEH			17	HOT	600UL
70	20	0.35	37	P 2	TWD	14	VH3	-0.85	TEH	TEC	NEW		36	COLD	600UL
70	54	0.73	138	P 2	TWD	26	VC3	-0.21	TEH	TEC			12	COLD	600UL
		0.49	159	P 2	TWD	20	VC3	-0.21	TEH	TEC			12	COLD	600UL
70	56	0.28	79	P 2	TWD	11	08H	+0.70	TEH	TEC			9	COLD	600UL
		0.28	79	P 2	TWD	11	08H	+0.70	TEH	TEC			9	COLD	600UL
70	80	0.27	103	P 2	TWD	10	VH3	-0.89	TEH	TEC			13	COLD	600UL
		0.26	120	P 2	TWD	10	VH3	-0.89	TEH	TEC			13	COLD	600UL
70	86	0.18	19	P 2	TWD	8	DBC	+1.71	TEH	TEC	NEW		14	COLD	600UL
70	92	0.21	141	P 2	TWD	10	DBH	-1.26	TEH	TEC	NEW		14	COLD	600UL
70	96	0.49	151	P 2	TWD	19	DBH	+1.96	TEH	TEC			14	COLD	600UL
		0.48	147	P 2	TWD	19	DBH	+1.96	TEH	TEC			14	COLD	600UL
70	124	0.98	129	P 2	TWD	30	VH3	-0.80	TEH	TEC			18	COLD	600UL
		1.01	122	P 2	TWD	31	VH3	+0.87	TEH	TEC			18	COLD	600UL
		0.72	77	P 2	TWD	26	VC3	+0.00	TEH	TEC			18	COLD	600UL
		0.39	75	P 2	TWD	16	VC3	+0.82	TEH	TEC			18	COLD	600UL
		1.01	121	P 2	TWD	31	VH3	+0.87	TEH	TEC			18	COLD	600UL
		0.72	77	P 2	TWD	26	VC3	+0.00	TEH	TEC			18	COLD	600UL
		0.39	75	P 2	TWD	17	VC3	+0.82	TEH	TEC			18	COLD	600UL
		0.98	128	P 2	TWD	31	VH3	-0.80	TEH	TEC			18	COLD	600UL
		1.06	120	P 2	TWD	30	VH3	-0.80	TEH	TEC			49	COLD	600UL
		1.00	111	P 2	TWD	29	VH3	+0.87	TEH	TEC			49	COLD	600UL
		0.80	81	P 2	TWD	25	VC3	+0.00	TEH	TEC			49	COLD	600UL
		0.48	78	P 2	TWD	17	VC3	+0.82	TEH	TEC			49	COLD	600UL

MAI, MCI, MMI, MVI, SAI, SCI, SVI, 0-100% twd

QUERY: QueryM3

ROW	LINE	VOLTS	DEG	CHN	IND	%TW	LOCATION		EXT	EXT	UTIL 1	UTIL 2	CAL #	LEG	PROBE
71	13	0.41	137	P 2	TWD 17	VH3		-0.99	TEH	TEC			41	COLD	600UL
		0.30	63	P 2	TWD 13	VH3		-0.99	TEH	TEC			41	COLD	600UL
71	53	0.35	76	P 2	TWD 16	08H		+0.43	TEH	TEC			12	COLD	600UL
		0.35	76	P 2	TWD 16	08H		+0.43	TEH	TEC			12	COLD	600UL
71	65	0.32	151	P 2	TWD 13	VH3		+0.65	TEH	TEC	NEW		8	COLD	600UL
71	75	0.29	162	P 2	TWD 15	VH3		+0.71	TEH	TEC	NEW		6	COLD	600UL
71	133	0.58	144	P 2	TWD 21	VC3		-0.71	TEC	TEH			1	HOT	600UL
		0.73	144	P 2	TWD 25	VH3		+0.73	TEC	TEH			1	HOT	600UL
		0.70	70	P 2	TWD 25	VH3		-0.82	TEC	TEH			1	HOT	600UL
		0.30	23	P 2	TWD 14	VC3		-0.11	TEC	TEH			1	HOT	600UL
		0.58	144	P 2	TWD 22	VC3		-0.71	TEC	TEH			1	HOT	600UL
		0.32	50	P 2	TWD 14	VC3		-0.11	TEC	TEH			1	HOT	600UL
		0.57	131	P 2	TWD 22	VH3		+0.73	TEC	TEH			1	HOT	600UL
		0.70	70	P 2	TWD 25	VH3		-0.82	TEC	TEH			1	HOT	600UL
71	163	0.32	102	P 2	TWD 15	02C		+0.14	TEC	TEH			18	HOT	600UL
72	14	0.36	101	P 2	TWD 15	VH3		-0.83	TEH	TEC			40	COLD	600UL
		0.39	86	P 2	TWD 15	VH3		-0.83	TEH	TEC			40	COLD	600UL
72	22	0.38	107	P 2	TWD 16	VH3		-0.99	TEH	TEC			36	COLD	600UL
		0.27	115	P 2	TWD 11	VH3		-0.99	TEH	TEC			36	COLD	600UL
72	84	0.59	128	P 2	TWD 21	VSM		-0.81	TEH	TEC			13	COLD	600UL
		0.55	72	P 2	TWD 20	VC3		+0.91	TEH	TEC			13	COLD	600UL
		0.27	19	P 2	TWD 12	VC3		+0.28	TEH	TEC			13	COLD	600UL
		0.59	128	P 2	TWD 21	VSM		-0.81	TEH	TEC			13	COLD	600UL
		0.23	26	P 2	TWD 9	VC3		+0.28	TEH	TEC			13	COLD	600UL
		0.45	85	P 2	TWD 17	VC3		+0.91	TEH	TEC			13	COLD	600UL
72	88	0.31	151	P 2	TWD 13	DBH		+2.19	TEH	TEC			14	COLD	600UL
		0.31	152	P 2	TWD 14	DBH		+2.19	TEH	TEC			14	COLD	600UL
72	148	0.38	132	P 2	TWD 15	VH3		-0.71	TEC	TEH	NEW		7	HOT	600UL
72	156	0.37	117	P 2	TWD 15	VH3		-0.82	TEC	TEH			17	HOT	600UL
		0.37	116	P 2	TWD 16	VH3		-0.82	TEC	TEH			17	HOT	600UL
72	158	0.36	54	P 2	TWD 15	VH3		-0.94	TEC	TEH			17	HOT	600UL
		0.36	54	P 2	TWD 16	VH3		-0.94	TEC	TEH			17	HOT	600UL
72	162	0.30	113	P 2	TWD 13	VH3		-0.89	TEC	TEH			17	HOT	600UL
		0.30	113	P 2	TWD 14	VH3		-0.89	TEC	TEH			17	HOT	600UL
73	21	0.29	23	P 2	TWD 12	DBH		-0.64	TEH	TEC	NEW		36	COLD	600UL
73	91	0.33	49	P 2	TWD 13	DBH		+1.99	TEH	TEC	NEW		13	COLD	600UL
73	161	0.29	93	P 2	TWD 12	VH3		-0.95	TEC	TEH			17	HOT	600UL
		0.28	117	P 2	TWD 12	01H		-0.85	TEC	TEH			17	HOT	600UL
		0.29	93	P 2	TWD 12	VH3		-0.95	TEC	TEH			17	HOT	600UL
74	16	0.45	124	P 2	TWD 19	VH3		-0.95	TEH	TEC			36	COLD	600UL
		0.44	91	P 2	TWD 16	VH3		-0.95	TEH	TEC			36	COLD	600UL
74	20	0.40	159	P 2	TWD 17	VH3		-0.91	TEH	TEC			36	COLD	600UL
		0.36	146	P 2	TWD 14	VH3		-0.91	TEH	TEC			36	COLD	600UL
74	24	0.38	133	P 2	TWD 16	VH3		-0.83	TEH	TEC			36	COLD	600UL
		0.27	116	P 2	TWD 11	VH3		-0.83	TEH	TEC			36	COLD	600UL
74	42	0.45	78	P 2	TWD 18	VH3		+0.77	TEH	TEC			32	COLD	600UL
		0.45	78	P 2	TWD 18	VH3		+0.77	TEH	TEC			32	COLD	600UL
74	104	0.28	33	P 2	TWD 11	DBC		+0.34	TEH	TEC	NEW		23	COLD	600UL
74	110	0.47	18	P 2	TWD 17	03H		-0.16	TEH	TEC			23	COLD	600UL
74	118	0.29	111	P 2	TWD 12	VSM		-0.78	TEH	TEC			20	COLD	600UL
		0.29	111	P 2	TWD 12	VSM		-0.78	TEH	TEC			20	COLD	600UL

MAI, MCI, MMI, MVI, SAI, SCI, SVI, 0-100% twd

QUERY: QueryM3

ROW	LINE	VOLTS	DEG	CHN	IND	%TW	LOCATION		EXT	EXT	UTIL 1	UTIL 2	CAL #	LEG	PROBE
74	140	0.26	142	P 2	TWD	13	VC3	+0.81	TEC	TEH			2	HOT	600UL
		0.26	142	P 2	TWD	13	VC3	+0.81	TEC	TEH			2	HOT	600UL
75	19	0.38	145	P 2	TWD	16	VH3	-0.97	TEH	TEC			36	COLD	600UL
		0.25	88	P 2	TWD	11	VSM	-0.54	TEH	TEC			36	COLD	600UL
		0.84	151	P 2	TWD	28	VC3	+0.85	TEH	TEC			36	COLD	600UL
		0.35	118	P 2	TWD	14	VH3	-0.97	TEH	TEC			36	COLD	600UL
		0.22	106	P 2	TWD	9	VSM	-0.54	TEH	TEC			36	COLD	600UL
		0.82	145	P 2	TWD	26	VC3	+0.85	TEH	TEC			36	COLD	600UL
75	43	0.62	41	P 2	TWD	23	VC3	+0.77	TEH	TEC			32	COLD	600UL
		0.62	41	P 2	TWD	23	VC3	+0.77	TEH	TEC			32	COLD	600UL
75	45	0.41	138	P 2	TWD	19	VH3	-0.80	TEH	TEC	NEW		31	COLD	600UL
75	79	0.76	144	P 2	TWD	26	VSM	+0.94	TEH	TEC			14	COLD	600UL
		0.22	164	P 2	TWD	10	VSM	-0.90	TEH	TEC			14	COLD	600UL
		0.76	144	P 2	TWD	26	VSM	+0.94	TEH	TEC			14	COLD	600UL
		0.22	148	P 2	TWD	10	VSM	-0.90	TEH	TEC			14	COLD	600UL
75	95	0.81	75	P 2	TWD	27	VC3	-0.90	TEH	TEC			14	COLD	600UL
		0.81	75	P 2	TWD	27	VC3	-0.90	TEH	TEC			14	COLD	600UL
75	147	0.74	102	P 2	TWD	24	VC3	+0.65	TEC	TEH			7	HOT	600UL
		0.74	101	P 2	TWD	24	VC3	+0.65	TEC	TEH			7	HOT	600UL
75	159	0.29	63	P 2	TWD	14	VH3	-0.85	TEC	TEH			18	HOT	600UL
		0.29	63	P 2	TWD	14	VH3	-0.85	TEC	TEH			18	HOT	600UL
76	16	0.44	120	P 2	TWD	17	08C	-0.06	TEH	TEC			35	COLD	600UL
		0.44	120	P 2	TWD	18	08C	-0.06	TEH	TEC			35	COLD	600UL
76	54	0.24	95	P 2	TWD	10	DBH	+0.95	TEH	TEC			11	COLD	600UL
		0.24	95	P 2	TWD	10	DBH	+0.95	TEH	TEC			11	COLD	600UL
76	132	0.40	146	P 2	TWD	16	VH3	-0.73	TEC	TEH			1	HOT	600UL
		0.39	145	P 2	TWD	17	VH3	-0.73	TEC	TEH			1	HOT	600UL
76	134	0.33	157	P 2	TWD	14	DBC	-1.99	TEC	TEH	NEW		1	HOT	600UL
76	146	0.53	29	P 2	TWD	19	VH3	+0.67	TEC	TEH			7	HOT	600UL
		0.62	132	P 2	TWD	22	VH3	-0.78	TEC	TEH			7	HOT	600UL
		0.54	31	P 2	TWD	19	VH3	+0.67	TEC	TEH			7	HOT	600UL
		0.63	132	P 2	TWD	21	VH3	-0.78	TEC	TEH			7	HOT	600UL
76	152	0.29	55	P 2	TWD	10	VC3	-0 63	TEC	TEH			11	HOT	600UL
		0.29	55	P 2	TWD	10	VC3	-0.63	TEC	TEH			11	HOT	600UL
76	154	0.50	135	P 2	TWD	17	VH3	-0.78	TEC	TEH			11	HOT	600UL
		0.50	135	P 2	TWD	17	VH3	-0.78	TEC	TEH			11	HOT	600UL
76	156	0.31	146	P 2	TWD	13	VH3	-0.86	TEC	TEH			17	HOT	600UL
		0.31	147	P 2	TWD	14	VH3	-0.86	TEC	TEH			17	HOT	600UL
76	160	0.35	155	P 2	TWD	16	VH3	-0.91	TEC	TEH			18	HOT	600UL
		0.35	155	P 2	TWD	17	VH3	-0.91	TEC	TEH			18	HOT	600UL
76	162	0.41	82	P 2	TWD	15	08H	+0.75	TEC	TEH			17	HOT	600UL
		0.38	76	P 2	TWD	17	08H	+0.75	TEC	TEH			17	HOT	600UL
77	15	0.44	122	P 2	TWD	18	VH3	-0.93	TEH	TEC			36	COLD	600UL
		0.37	45	P 2	TWD	14	VH3	-0.93	TEH	TEC			36	COLD	600UL
77	29	0.51	140	P 2	TWD	19	VC3	+0.71	TEH	TEC			35	COLD	600UL
		0.51	140	P 2	TWD	19	VC3	+0.71	TEH	TEC			35	COLD	600UL
77	39	0.31	67	P 2	TWD	13	VC3	+0.91	TEH	TEC			32	COLD	600UL
		0.30	70	P 2	TWD	13	VC3	+0.91	TEH	TEC			32	COLD	600UL
77	61	0.66	154	P 2	TWD	23	VSM	+0.72	TEH	TEC			9	COLD	600UL
		0.60	119	P 2	TWD	21	VH3	-0.85	TEH	TEC			9	COLD	600UL
		0.60	119	P 2	TWD	21	VH3	-0.85	TEH	TEC			9	COLD	600UL
		0.66	154	P 2	TWD	23	VSM	+0.72	TEH	TEC			9	COLD	600UL
77	75	0.42	58	P 2	TWD	16	VH3	-0.98	TEH	TEC			5	COLD	600UL

MAI, MCI, MMI, MVI, SAI, SCI, SVI, 0-100% twd

QUERY: QueryM3

ROW	LINE	VOLTS	DEG	CHN	IND	%TW	LOCATION		EXT	EXT	UTIL 1	UTIL 2	CAL #	LEG	PROBE
		0.42	58	P 2	TWD	16	VH3	-0.98	TEH	TEC			5	COLD	600UL
		0.21	101	P 2	TWD	9	DBC	+1.85	TEH	TEC	NEW		5	COLD	600UL
77	155	0.82	139	P 2	TWD	29	VH3	+0.80	TEC	TEH			18	HOT	600UL
		0.39	53	P 2	TWD	18	VH3	-0.98	TEC	TEH			18	HOT	600UL
		0.82	139	P 2	TWD	29	VH3	+0.80	TEC	TEH			18	HOT	600UL
		0.44	140	P 2	TWD	19	VH3	-0.98	TEC	TEH			18	HOT	600UL
78	20	0.58	136	P 2	TWD	22	VH3	-0.93	TEH	TEC			36	COLD	600UL
		0.52	100	P 2	TWD	19	VH3	-0.93	TEH	TEC			36	COLD	600UL
78	24	0.52	109	P 2	TWD	21	VC3	-0.85	TEH	TEC			36	COLD	600UL
		0.49	72	P 2	TWD	18	VC3	-0.85	TEH	TEC			36	COLD	600UL
78	40	0.17	122	P 2	TWD	7	DBC	-1.63	TEH	TEC	NEW		32	COLD	600UL
78	62	0.50	134	P 2	TWD	19	VC3	-0.68	TEH	TEC			9	COLD	600UL
		0.49	137	P 2	TWD	18	VC3	-0.68	TEH	TEC			9	COLD	600UL
78	116	0.26	151	P 2	TWD	11	DBH	+2.20	TEH	TEC	NEW		22	COLD	600UL
78	158	0.50	113	P 2	TWD	21	VH3	-0.85	TEC	TEH			18	HOT	600UL
		0.51	116	P 2	TWD	22	VH3	-0.85	TEC	TEH			18	HOT	600UL
78	160	0.86	105	P 2	TWD	27	VH3	-0.81	TEC	TEH			17	HOT	600UL
		0.74	109	P 2	TWD	26	VH3	-0.81	TEC	TEH			17	HOT	600UL
79	19	0.29	8	P 2	TWD	12	DBH	+1.82	TEH	TEC	NEW		36	COLD	600UL
79	25	0.36	51	P 2	TWD	14	08C	-1.00	TEH	TEC			35	COLD	600UL
		0.42	29	P 2	TWD	17	08C	-1.00	TEH	TEC			35	COLD	600UL
79	29	0.44	47	P 2	TWD	17	VC3	+0.93	TEH	TEC			36	COLD	600UL
		0.44	50	P 2	TWD	17	VC3	+0.93	TEH	TEC			36	COLD	600UL
		0.29	34	P 2	TWD	12	VSM	-0.83	TEH	TEC	NEW		36	COLD	600UL
79	39	0.49	98	P 2	TWD	21	DBC	+1.95	TEH	TEC			31	COLD	600UL
		0.51	95	P 2	TWD	22	DBC	+1.95	TEH	TEC			31	COLD	600UL
79	81	1.85	130	P 2	TWD	40	VSM	+0.90	TEH	TEC			14	COLD	600UL
		0.49	145	P 2	TWD	19	VSM	-0.62	TEH	TEC			14	COLD	600UL
		0.46	140	P 2	TWD	19	VSM	-0.62	TEH	TEC			27	COLD	600UL
		1.58	127	P 2	TWD	40	VSM	+0.90	TEH	TEC			27	COLD	600UL
		1.87	130	P 2	TWD	41	VSM	+0.90	TEH	TEC			14	COLD	600UL
		0.49	145	P 2	TWD	19	VSM	-0.62	TEH	TEC			14	COLD	600UL
79	93	0.50	97	P 4	TWD	26	DBC	+2.14	DBC	DBC	LAR		174	HOT	560FH
		0.58	88	P 2	TWD	21	VH3	-0.49	TEH	TEC			14	COLD	600UL
		1.02	120	P 2	TWD	31	VC3	-1.01	TEH	TEC			14	COLD	600UL
		0.84	86	P 2	TWD	27	VC3	+0.88	TEH	TEC			14	COLD	600UL
		0.78	113	P 2	TWD	26	VH3	+0.90	TEH	TEC			14	COLD	600UL
		0.58	87	P 2	TWD	22	VH3	-0.49	TEH	TEC			14	COLD	600UL
		0.88	108	P 2	TWD	28	VH3	+0.90	TEH	TEC			14	COLD	600UL
		0.85	86	P 2	TWD	27	VC3	+0.88	TEH	TEC			14	COLD	600UL
		1.03	119	P 2	TWD	31	VC3	-1.01	TEH	TEC			14	COLD	600UL
		0.87	133	P 2	TWD	30	VC3	-1.01	TEH	TEC			27	COLD	600UL
		0.59	83	P 2	TWD	23	VH3	-0.49	TEH	TEC			27	COLD	600UL
		0.74	132	P 2	TWD	27	VH3	+0.90	TEH	TEC			27	COLD	600UL
		0.82	62	P 2	TWD	29	VC3	+0.88	TEH	TEC			27	COLD	600UL
79	95	0.30	85	P 4	TWD	19	DBC	+1.78	DBC	DBC	LAR		174	HOT	560FH
79	125	0.32	155	P 2	TWD	14	VH3	+0.78	TEH	TEC			18	COLD	600UL
		0.72	129	P 2	TWD	26	VSM	+0.76	TEH	TEC			18	COLD	600UL
		0.32	154	P 2	TWD	14	VH3	+0.78	TEH	TEC			18	COLD	600UL
		0.72	127	P 2	TWD	26	VSM	+0.76	TEH	TEC			18	COLD	600UL
79	129	0.39	120	P 2	TWD	16	VSM	-0.87	TEH	TEC			15	COLD	600UL
		0.48	157	P 2	TWD	19	VSM	+0.83	TEH	TEC			15	COLD	600UL
		0.79	139	P 2	TWD	26	VH3	+0.95	TEH	TEC			15	COLD	600UL
		0.78	142	P 2	TWD	26	VH3	+0.95	TEH	TEC			15	COLD	600UL
		0.39	120	P 2	TWD	16	VSM	-0.87	TEH	TEC			15	COLD	600UL
		0.48	157	P 2	TWD	19	VSM	+0.83	TEH	TEC			15	COLD	600UL
79	161	0.25	20	P 2	TWD	11	VH3	-0.85	TEC	TEH			17	HOT	600UL

MAI, MCI, MMI, MVI, SAI, SCI, SVI, 0-100% twd

QUERY: QueryM3

ROW	LINE	VOLTS	DEG	CHN	IND	%TW	LOCATION		EXT	EXT	UTIL 1	UTIL 2	CAL #	LEG	PROBE
		0.25	20	P 2	TWD	12	VH3	-0.85	TEC	TEH			17	HOT	600UL
80	74	0.17	154	P 2	TWD	7	DBH	+0.43	TEH	TEC	NEW		5	COLD	600UL
80	112	0.41	40	P 2	TWD	16	DBH	+2.07	TEH	TEC	NEW		23	COLD	600UL
80	152	0.31	43	P 2	TWD	13	DBC	+2.00	TEC	TEH	NEW		11	HOT	600UL
80	156	0.30	51	P 2	TWD	13	VH3	-0.94	TEC	TEH			17	HOT	600UL
		0.31	78	P 2	TWD	14	VH3	-0.94	TEC	TEH			17	HOT	600UL
81	27	0.24	33	P 2	TWD	10	DBH	-1.97	TEH	TEC	NEW		36	COLD	600UL
81	29	0.33	130	P 2	TWD	13	VH3	+0.79	TEH	TEC			35	COLD	600UL
		0.33	130	P 2	TWD	13	VH3	+0.79	TEH	TEC			35	COLD	600UL
81	153	0.51	117	P 2	TWD	22	VH3	+0.91	TEC	TEH			12	HOT	600UL
		0.25	73	P 2	TWD	13	VH3	-0.89	TEC	TEH			12	HOT	600UL
		0.50	119	P 2	TWD	21	VH3	+0.91	TEC	TEH			12	HOT	600UL
		0.25	72	P 2	TWD	12	VH3	-0.89	TEC	TEH			12	HOT	600UL
		0.31	46	P 2	TWD	14	DBC	+2.00	TEC	TEH	NEW		12	HOT	600UL
82	18	0.37	114	P 2	TWD	14	08C	+0.77	TEH	TEC			35	COLD	600UL
		0.40	114	P 2	TWD	15	08C	+0.77	TEH	TEC			35	COLD	600UL
82	52	0.19	36	P 2	TWD	9	DBC	+1.82	TEH	TEC	NEW		12	COLD	600UL
82	64	0.57	77	P 2	TWD	21	VH3	+0.97	TEH	TEC			9	COLD	600UL
		0.57	77	P 2	TWD	21	VH3	+0.97	TEH	TEC			9	COLD	600UL
82	94	0.57	139	P 2	TWD	21	VH3	-0.19	TEH	TEC			14	COLD	600UL
		0.57	140	P 2	TWD	21	VH3	-0.19	TEH	TEC			14	COLD	600UL
82	116	0.46	116	P 2	TWD	18	DBH	+1.23	TEH	TEC			22	COLD	600UL
		0.26	106	P 2	TWD	11	DBH	+0.02	TEH	TEC			22	COLD	600UL
		0.24	92	P 2	TWD	11	DBH	+0.02	TEH	TEC			22	COLD	600UL
		0.48	116	P 2	TWD	18	DBH	+1 23	TEH	TEC			22	COLD	600UL
		0.51	82	P 6	TWD	25	DBH	+2.04	DBH	DBH	LAR		198	HOT	560FH
83	17	0.22	27	P 2	TWD	8	02C	+0.89	TEH	TEC			35	COLD	600UL
		0.34	80	P 2	TWD	13	08H	+0.91	TEH	TEC			35	COLD	600UL
		0.22	141	P 2	TWD	10	08H	+0.39	TEH	TEC			35	COLD	600UL
		0.33	83	P 2	TWD	13	08H	+0.91	TEH	TEC			35	COLD	600UL
		0.22	141	P 2	TWD	10	08H	+0.39	TEH	TEC			35	COLD	600UL
83	59	0.44	27	P 2	TWD	18	DBH	+1.09	TEH	TEC	NEW		10	COLD	600UL
83	73	0.19	175	P 2	TWD	10	DBH	+1.39	TEH	TEC	NEW		6	COLD	600UL
83	101	0.29	82	P 2	TWD	14	VSM	+1.16	TEH	TEC			27	COLD	600UL
		0.28	84	P 2	TWD	12	VSM	+1.16	TEH	TEC			27	COLD	600UL
83	103	0.91	131	P 2	TWD	28	09H	+1.98	TEH	TEC	LOCOK		24	COLD	600UL
		0 91	131	P 2	TWD	28	09H	+1.98	TEH	TEC	LAR		24	COLD	600UL
83	107	0.42	54	P 2	TWD	16	09H	-1.04	TEH	TEC	LOCOK		23	COLD	600UL
		0.31	79	P 2	TWD	12	09H	-1.04	TEH	TEC			23	COLD	600UL
83	115	0.55	119	P 2	TWD	21	VSM	+1.22	TEH	TEC			24	COLD	600UL
		0.90	139	P 2	TWD	28	09H	+1.66	TEH	TEC	LOCOK		24	COLD	600UL
		0.55	119	P 2	TWD	21	VSM	+1.22	TEH	TEC			24	COLD	600UL
		0.90	139	P 2	TWD	28	09H	+1.66	TEH	TEC	LAR		24	COLD	600UL
84	40	0.35	40	P 2	TWD	17	09C	+1.19	TEH	TEC	NEW		31	COLD	600UL
84	50	0.25	127	P 2	TWD	9	VH2	-1.10	TEH	TEC	NEW		11	COLD	600UL
84	90	0.47	57	P 2	TWD	18	DBH	-2.00	TEH	TEC	NEW		13	COLD	600UL
84	92	0.47	42	P 2	TWD	18	09H	+0.97	TEH	TEC	NEW		13	COLD	600UL
		0.34	37	P 2	TWD	14	09H	-1.25	TEH	TEC	NEW		13	COLD	600UL
84	100	0.52	60	P 2	TWD	22	09H	+1.18	TEH	TEC			27	COLD	600UL
		0.45	136	P 2	TWD	20	09H	-1.56	TEH	TEC	LOCOK		27	COLD	600UL
		0.52	62	P 2	TWD	21	09H	+1.18	TEH	TEC			27	COLD	600UL

MAI, MCI, MMI, MVI, SAI, SCI, SVI, 0-100% twd

QUERY: QueryM3

ROW	LINE	VOLTS	DEG	CHN	IND	%TW	LOCATION		EXT	EXT	UTIL 1	UTIL 2	CAL #	LEG	PROBE
		0.44	137	P 2	TWD	19	09H	-1.56	TEH	TEC	LAR		27	COLD	600UL
84	112	0.41	103	P 2	TWD	15	VH2	-1.07	TEH	TEC			23	COLD	600UL
		0.41	104	P 2	TWD	16	VH2	-1.07	TEH	TEC			23	COLD	600UL
84	114	0.64	163	P 2	TWD	22	VH2	-1.06	TEH	TEC	NEW		23	COLD	600UL
84	116	0.64	80	P 2	TWD	23	VH2	-0.97	TEH	TEC	NEW		21	COLD	600UL
84	118	0.42	151	P 2	TWD	19	VH2	-1.04	TEH	TEC			19	COLD	600UL
		0.42	152	P 2	TWD	19	VH2	-1.04	TEH	TEC			19	COLD	600UL
84	122	0.36	148	P 2	TWD	17	VH2	-1.16	TEH	TEC	NEW		19	COLD	600UL
84	134	0.36	70	P 2	TWD	15	VH2	+0.60	TEC	TEH	NEW		1	HOT	600UL
84	140	0.44	46	P 2	TWD	18	VH2	-1.10	TEC	TEH			1	HOT	600UL
		0.44	46	P 2	TWD	18	VH2	-1.10	TEC	TEH			1	HOT	600UL
84	142	0.43	156	P 2	TWD	18	VH2	-0.97	TEC	TEH	NEW		1	HOT	600UL
84	144	0.39	98	P 2	TWD	15	VH2	+0.66	TEC	TEH			1	HOT	600UL
		0.39	98	P 2	TWD	17	VH2	+0.66	TEC	TEH			1	HOT	600UL
85	31	0.23	86	P 2	TWD	9	DBH	-1.53	TEH	TEC	NEW		36	COLD	600UL
85	93	0.58	109	P 2	TWD	21	09H	+1.14	TEH	TEC			13	COLD	600UL
		0.78	43	P 2	TWD	26	09H	+1.14	TEH	TEC			13	COLD	600UL
85	97	0.52	116	P 2	TWD	19	09H	+1.02	TEH	TEC	NEW		13	COLD	600UL
85	105	0.55	143	P 2	TWD	20	09H	-1.21	TEH	TEC			24	COLD	600UL
		0.55	143	P 2	TWD	20	09H	-1.21	TEH	TEC			24	COLD	600UL
85	129	0.49	34	P 2	TWD	18	VH2	+0.85	TEH	TEC			49	COLD	600UL
		0.49	34	P 2	TWD	18	VH2	+0.85	TEH	TEC			49	COLD	600UL
85	131	0.59	154	P 2	TWD	22	VH2	+0.02	TEC	TEH	NEW		1	HOT	600UL
86	66	0.46	124	P 2	TWD	18	09H	+0.21	TEH	TEC			8	COLD	600UL
		0.46	124	P 2	TWD	18	09H	+0.21	TEH	TEC			8	COLD	600UL
86	76	0.35	143	P 2	TWD	14	07H	+0.21	TEH	TEC			5	COLD	600UL
		0.29	135	P 2	TWD	12	07H	+0.21	TEH	TEC			5	COLD	600UL
86	80	0.38	25	P 2	TWD	14	09H	+0.42	TEH	TEC			13	COLD	600UL
		0.40	25	P 2	TWD	15	09H	+0.42	TEH	TEC			13	COLD	600UL
86	98	0.45	106	P 2	TWD	18	VH2	-0.66	TEH	TEC	NEW		14	COLD	600UL
86	110	0.44	155	P 2	TWD	16	09H	+1.02	TEH	TEC	NEW		23	COLD	600UL
		0.48	30	P 2	TWD	18	VH2	-1.08	TEH	TEC	NEW		23	COLD	600UL
86	112	0.32	142	P 2	TWD	13	VH2	-0.70	TEH	TEC			24	COLD	600UL
		0.32	142	P 2	TWD	13	VH2	-0.70	TEH	TEC			24	COLD	600UL
86	122	0.31	136	P 2	TWD	13	VH2	-0.67	TEH	TEC	NEW		20	COLD	600UL
86	124	0.34	146	P 2	TWD	15	VH2	-0.54	TEH	TEC	NEW		18	COLD	600UL
86	130	0.55	49	P 2	TWD	22	VH2	-0.88	TEC	TEH	NEW		2	HOT	600UL
86	134	0.42	154	P 2	TWD	18	VH2	-1.13	TEC	TEH	NEW		2	HOT	600UL
86	144	0.53	52	P 2	TWD	22	VH2	+1.13	TEC	TEH	NEW		2	HOT	600UL
86	156	0.47	38	P 2	TWD	20	VH2	-0.71	TEC	TEH			18	HOT	600UL
		0.47	38	P 2	TWD	20	VH2	-0.71	TEC	TEH			18	HOT	600UL
87	45	0.32	97	P 2	TWD	16	VH2	+0.86	TEH	TEC			31	COLD	600UL
		0.31	133	P 2	TWD	15	VH2	-0.82	TEH	TEC			31	COLD	600UL
		0.32	97	P 2	TWD	16	VH2	+0.86	TEH	TEC			31	COLD	600UL
		0.29	118	P 2	TWD	14	VH2	-0.82	TEH	TEC			31	COLD	600UL
		0.27	116	P 2	TWD	13	VH3	-0.80	TEH	TEC	NEW		31	COLD	600UL

MAI, MCI, MMI, MVI, SAI, SCI, SVI, 0-100% twd

QUERY: QueryM3

ROW	LINE	VOLTS	DEG	CHN	IND	%TW	LOCATION		EXT	EXT	UTIL 1	UTIL 2	CAL #	LEG	PROBE
87	103	0.40	111	P 2	TWD	16	08H	+0.73	TEH	TEC			24	COLD	600UL
		0.34	131	P 2	TWD	14	09H	+0.77	TEH	TEC			24	COLD	600UL
		0.34	131	P 2	TWD	14	09H	+0.77	TEH	TEC			24	COLD	600UL
		0.40	111	P 2	TWD	16	08H	+0.73	TEH	TEC			24	COLD	600UL
87	135	0.39	50	P 2	TWD	17	VH2	-0.88	TEC	TEH	NEW		1	HOT	600UL
87	157	0.47	155	P 2	TWD	20	03H	-1.20	TEC	TEH			18	HOT	600UL
88	44	0.31	120	P 2	TWD	15	VH2	+0.86	TEH	TEC	NEW		31	COLD	600UL
88	46	0.34	119	P 2	TWD	16	DBC	-1.89	TEH	TEC			31	COLD	600UL
		0.34	119	P 2	TWD	16	DBC	-1.89	TEH	TEC			31	COLD	600UL
		0.30	107	P 2	TWD	15	VH2	+0.97	TEH	TEC	NEW		31	COLD	600UL
88	48	0.48	85	P 2	TWD	17	VH2	-0.87	TEH	TEC	NEW		11	COLD	600UL
88	62	0.45	47	P 2	TWD	17	VH2	-0.80	TEH	TEC	NEW		9	COLD	600UL
88	64	0.42	66	P 2	TWD	16	VH2	-0.78	TEH	TEC	NEW		9	COLD	600UL
88	66	0.32	88	P 2	TWD	13	09H	+0.91	TEH	TEC			7	COLD	600UL
		0.32	99	P 2	TWD	13	09H	+0.91	TEH	TEC			7	COLD	600UL
88	104	0.27	76	P 2	TWD	12	08H	-0.18	TEH	TEC			24	COLD	600UL
		0.19	152	P 2	TWD	9	08H	-0.83	TEH	TEC			24	COLD	600UL
		0.27	76	P 2	TWD	12	08H	-0.18	TEH	TEC			24	COLD	600UL
		0.20	144	P 2	TWD	9	08H	-0.83	TEH	TEC			24	COLD	600UL
88	108	0.34	130	P 2	TWD	14	VH2	-0.75	TEH	TEC	NEW		24	COLD	600UL
88	112	0.60	50	P 2	TWD	21	VH2	-0.82	TEH	TEC	NEW		23	COLD	600UL
88	114	0.63	90	P 2	TWD	21	VH2	-0.74	TEH	TEC			23	COLD	600UL
		0.63	90	P 2	TWD	21	VH2	-0.74	TEH	TEC			23	COLD	600UL
88	116	0.78	74	P 2	TWD	26	VH2	-0.60	TEH	TEC			21	COLD	600UL
		0.77	83	P 2	TWD	26	VH2	-0.60	TEH	TEC			21	COLD	600UL
		0.34	146	P 2	TWD	17	VC3	+0.64	TEH	TEC	NEW		21	COLD	600UL
88	118	0.65	138	P 2	TWD	26	VH2	-0.64	TEH	TEC			19	COLD	600UL
		0.68	133	P 2	TWD	27	VH2	-0.64	TEH	TEC			19	COLD	600UL
88	120	0.66	40	P 2	TWD	26	VH2	-0.54	TEH	TEC	NEW		19	COLD	600UL
88	124	0.41	27	P 2	TWD	18	VH2	-0.66	TEH	TEC	NEW		17	COLD	600UL
88	126	0.57	97	P 2	TWD	22	VH2	-0.70	TEH	TEC			17	COLD	600UL
		0.59	108	P 2	TWD	23	VH2	-0.70	TEH	TEC			17	COLD	600UL
88	130	0.43	158	P 2	TWD	17	VH2	-0.98	TEC	TEH			1	HOT	600UL
		0.44	159	P 2	TWD	18	VH2	-0.98	TEC	TEH			1	HOT	600UL
88	132	0.38	102	P 2	TWD	15	VH2	-0.93	TEC	TEH			1	HOT	600UL
		0.39	118	P 2	TWD	16	VH2	-0.93	TEC	TEH			1	HOT	600UL
88	142	0.36	82	P 2	TWD	15	VH2	-0.95	TEC	TEH	NEW		1	HOT	600UL
88	144	0.40	40	P 2	TWD	17	VH2	-0.07	TEC	TEH	NEW		1	HOT	600UL
88	146	0.45	69	P 2	TWD	17	VH2	+0.80	TEC	TEH	NEW		7	HOT	600UL
89	45	0.28	101	P 2	TWD	14	VH2	+0.88	TEH	TEC	NEW		31	COLD	600UL
89	59	0.44	54	P 2	TWD	17	VH2	-0.72	TEH	TEC	NEW		9	COLD	600UL
89	71	0.30	152	P 2	TWD	13	09H	+0.47	TEH	TEC			7	COLD	600UL
		0.30	152	P 2	TWD	13	09H	+0.47	TEH	TEC			7	COLD	600UL
89	73	0.19	155	P 2	TWD	8	DBH	-1.25	TEH	TEC	NEW		5	COLD	600UL
89	125	0.31	26	P 2	TWD	14	VH2	-0.83	TEH	TEC			17	COLD	600UL
		0.28	129	P 2	TWD	13	VH2	+0.83	TEH	TEC			17	COLD	600UL
		0.31	26	P 2	TWD	14	VH2	-0.83	TEH	TEC			17	COLD	600UL
		0.35	139	P 2	TWD	16	VH2	+0.83	TEH	TEC			17	COLD	600UL

MAI, MCI, MMI, MVI, SAI, SCI, SVI, 0-100% twd

QUERY: QueryM3

ROW	LINE	VOLTS	DEG	CHN	IND	%TW	LOCATION		EXT	EXT	UTIL 1	UTIL 2	CAL #	LEG	PROBE
89	137	0.45	86	P 2	TWD	18	VH2	-0.97	TEC	TEH			1	HOT	600UL
		0.33	133	P 2	TWD	15	VH2	+0.93	TEC	TEH			1	HOT	600UL
		0.35	139	P 2	TWD	15	VH2	+0.93	TEC	TEH			1	HOT	600UL
		0.45	86	P 2	TWD	19	VH2	-0.97	TEC	TEH			1	HOT	600UL
		0.47	111	P 2	TWD	19	DBH	+1.72	TEC	TEH	NEW		1	HOT	600UL
90	64	0.47	104	P 2	TWD	19	VH2	-0.86	TEH	TEC			1	COLD	600UL
		0.45	120	P 2	TWD	19	VH2	-0.86	TEH	TEC			1	COLD	600UL
90	74	0.29	121	P 2	TWD	13	VH2	-0.84	TEH	TEC			1	COLD	600UL
		0.30	122	P 2	TWD	13	VH2	-0.84	TEH	TEC			1	COLD	600UL
91	67	0.41	116	P 2	TWD	17	VH3	-0.71	TEH	TEC			1	COLD	600UL
		0.41	116	P 2	TWD	17	VH3	-0.71	TEH	TEC			1	COLD	600UL
91	137	0.23	40	P 2	TWD	10	DBH	+1.75	TEC	TEH			34	HOT	600UL
		0.24	61	P 2	TWD	10	DBH	+1.75	TEC	TEH			34	HOT	600UL
92	44	0.47	122	P 2	TWD	20	VH2	-0.76	TEH	TEC	NEW		30	COLD	600UL
92	48	0.45	40	P 2	TWD	20	VH2	-0.80	TEH	TEC	NEW		6	COLD	600UL
93	87	0.30	151	P 2	TWD	16	08H	+0.66	TEC	TEH			4	HOT	600UL
		0.29	67	P 2	TWD	17	07H	+0.82	TEC	TEH			4	HOT	600UL
		0.30	151	P 2	TWD	16	08H	+0.66	TEC	TEH			4	HOT	600UL
		0.30	68	P 2	TWD	16	07H	+0.82	TEC	TEH			4	HOT	600UL
94	98	0.16	51	P 2	TWD	11	DBH	+2.22	TEC	TEH	NEW		6	HOT	600UL
96	24	0.64	87	P 2	TWD	24	09C	+0.75	TEH	TEC			30	COLD	600UL
		0.64	87	P 2	TWD	24	09C	+0.75	TEH	TEC			30	COLD	600UL
96	58	0.39	115	P 2	TWD	16	VH2	-0.73	TEH	TEC	NEW		3	COLD	600UL
96	64	0.34	75	P 2	TWD	15	VH2	-0.91	TEH	TEC	NEW		2	COLD	600UL
96	136	0.42	85	P 2	TWD	17	VH2	+0.91	TEC	TEH	NEW		34	HOT	600UL
		0.41	83	P 2	TWD	17	VH2	-1.09	TEC	TEH	NEW		34	HOT	600UL
97	27	0.15	129	P 2	TWD	7	DBC	-2.00	TEH	TEC			29	COLD	600UL
		0.15	129	P 2	TWD	7	DBC	-2.00	TEH	TEC			29	COLD	600UL
97	31	0.33	94	P 2	TWD	15	VH2	-0.80	TEH	TEC			29	COLD	600UL
		0.33	94	P 2	TWD	14	VH2	-0.80	TEH	TEC			29	COLD	600UL
97	67	0.25	135	P 2	TWD	12	VH3	+0.91	TEH	TEC			2	COLD	600UL
		0.25	135	P 2	TWD	12	VH3	+0.91	TEH	TEC			2	COLD	600UL
97	89	0.23	16	P 2	TWD	14	DBH	+0.06	TEC	TEH			4	HOT	600UL
		0.23	22	P 2	TWD	13	DBH	+0.06	TEC	TEH			4	HOT	600UL
97	91	0.52	21	P 2	TWD	26	DBH	+2.00	TEC	TEH			6	HOT	600UL
		0.47	22	P 2	TWD	24	DBH	+2.00	TEC	TEH			6	HOT	600UL
97	99	0.11	167	P 2	TWD	8	DBH	+0.67	TEC	TEH	NEW		6	HOT	600UL
98	24	0.42	154	P 2	TWD	18	04H	-0.92	TEH	TEC			29	COLD	600UL
98	118	0.33	146	P 2	TWD	19	VH2	-0.95	TEC	TEH	NEW		16	HOT	600UL
98	144	0.30	64	P 2	TWD	13	09H	-0.72	TEC	TEH			34	HOT	600UL
		0.31	57	P 2	TWD	13	09H	-0.72	TEC	TEH			34	HOT	600UL
99	25	0.28	77	P 2	TWD	13	VH2	-0.96	TEH	TEC			30	COLD	600UL
		0.25	142	P 2	TWD	12	VH2	-0.96	TEH	TEC			30	COLD	600UL
99	29	0.33	67	P 2	TWD	15	VH2	-0.81	TEH	TEC			30	COLD	600UL
		0.33	67	P 2	TWD	15	VH2	-0.81	TEH	TEC			30	COLD	600UL
99	131	0.39	56	P 2	TWD	15	VH2	-0.83	TEH	TEC			49	COLD	600UL
		0.30	105	P 2	TWD	12	VH2	+0.86	TEH	TEC			49	COLD	600UL
		0.39	56	P 2	TWD	15	VH2	-0.83	TEH	TEC			49	COLD	600UL
		0.32	73	P 2	TWD	12	VH2	+0.86	TEH	TEC			49	COLD	600UL

MAI, MCI, MMI, MVI, SAI, SCI, SVI, 0-100% twd

QUERY: QueryM3

ROW	LINE	VOLTS	DEG	CHN	IND	%TW	LOCATION		EXT	EXT	UTIL 1	UTIL 2	CAL #	LEG	PROBE
99	135	0.36	110	P 2	TWD	15	VH2	-0.67	TEC	TEH	NEW		34	HOT	600UL
		0.43	32	P 2	TWD	17	VH2	+0.59	TEC	TEH	NEW		34	HOT	600UL
99	151	0.33	45	P 2	TWD	15	08H	-0.81	TEC	TEH			35	HOT	600UL
		0.33	45	P 2	TWD	15	08H	-0.81	TEC	TEH			35	HOT	600UL
100	90	0.25	97	P 2	TWD	10	DBH	-2.25	TEC	TEH	NEW		5	HOT	600UL
100	100	0.24	50	P 2	TWD	10	DBH	+1.12	TEC	TEH	NEW		5	HOT	600UL
100	130	0.38	149	P 2	TWD	16	VH2	-0.84	TEC	TEH			35	HOT	600UL
		0.39	148	P 2	TWD	16	VH2	-0.84	TEC	TEH			35	HOT	600UL
101	75	0.42	20	P 1	SCI		TSH	-0.05	TSH	TSH	0.42	9.10	54	HOT	580PP
102	36	0.37	53	P 2	TWD	16	VH2	-0.81	TEH	TEC	NEW		30	COLD	600UL
102	42	0.33	127	P 2	TWD	15	VH2	-0.85	TEH	TEC	NEW		30	COLD	600UL
102	50	0.48	126	P 2	TWD	18	VH2	-0.85	TEH	TEC	NEW		5	COLD	600UL
102	52	0.14	14	P 2	TWD	6	DBC	+1.81	TEH	TEC	NEW		5	COLD	600UL
102	56	0.37	113	P 2	TWD	15	VH2	-0.85	TEH	TEC	NEW		5	COLD	600UL
102	134	0.43	75	P 2	TWD	17	VH2	-0.69	TEC	TEH	NEW		34	HOT	600UL
102	150	0.19	15	P 2	TWD	9	DBC	+1.88	TEC	TEH	NEW		35	HOT	600UL
103	29	0.45	89	P 2	TWD	19	VH2	+0.83	TEH	TEC			30	COLD	600UL
		0.45	89	P 2	TWD	19	VH2	+0.83	TEH	TEC			30	COLD	600UL
103	47	0.26	106	P 2	TWD	14	VH2	-0.89	TEC	TEH			24	HOT	600UL
		0.26	106	P 2	TWD	14	VH2	-0.89	TEC	TEH			24	HOT	600UL
103	95	0.51	23	P 2	TWD	19	09H	-1.16	TEC	TEH	NEW		5	HOT	600UL
103	131	0.42	134	P 2	TWD	16	VH2	-0 75	TEH	TEC			49	COLD	600UL
		0.42	134	P 2	TWD	16	VH2	-0.75	TEH	TEC			49	COLD	600UL
103	147	0.50	21	P 2	TWD	19	VH2	+0.56	TEC	TEH	NEW		34	HOT	600UL
		0.42	151	P 2	TWD	17	VH2	-0.87	TEC	TEH	NEW		34	HOT	600UL
103	149	0.51	110	P 2	TWD	21	08H	+0.00	TEC	TEH			35	HOT	600UL
		0.51	110	P 2	TWD	20	08H	+0.00	TEC	TEH			35	HOT	600UL
104	46	0.34	102	P 2	TWD	15	VH2	-0.89	TEH	TEC			30	COLD	600UL
		0.34	102	P 2	TWD	15	VH2	-0.89	TEH	TEC			30	COLD	600UL
104	60	0.38	112	P 2	TWD	15	VH2	-0.66	TEH	TEC			3	COLD	600UL
		0.34	83	P 2	TWD	14	VH2	-0.66	TEH	TEC			3	COLD	600UL
104	148	0.39	129	P 2	TWD	16	VH2	-1.05	TEC	TEH	NEW		34	HOT	600UL
105	31	0.30	157	P 2	TWD	14	VH2	-0.73	TEH	TEC			29	COLD	600UL
		0.30	157	P 2	TWD	13	VH2	-0.73	TEH	TEC			29	COLD	600UL
105	107	0.10	107	P 2	TWD	8	DBH	+1.31	TEC	TEH	NEW		10	HOT	600UL
105	117	0.23	134	P 2	TWD	15	DBH	+0.89	TEC	TEH	NEW		16	HOT	600UL
105	127	0.40	119	P 2	TWD	22	VH2	-0.80	TEC	TEH			16	HOT	600UL
		0.39	121	P 2	TWD	21	VH2	-0.80	TEC	TEH			16	HOT	600UL
106	28	0.27	136	P 2	TWD	12	DBH	+1.96	TEH	TEC	NEW		29	COLD	600UL
106	30	0.35	110	P 2	TWD	15	09H	+0.81	TEH	TEC			30	COLD	600UL
		0.35	110	P 2	TWD	15	09H	+0.81	TEH	TEC			30	COLD	600UL
106	46	0.26	77	P 2	TWD	12	VH3	-0.87	TEH	TEC			29	COLD	600UL
		0.26	77	P 2	TWD	11	VH3	-0.87	TEH	TEC			29	COLD	600UL
106	54	0.36	103	P 2	TWD	14	VH2	-0.79	TEH	TEC			5	COLD	600UL
		0.36	103	P 2	TWD	14	VH2	-0.79	TEH	TEC			5	COLD	600UL

MAI, MCI, MMI, MVI, SAI, SCI, SVI, 0-100% twd

QUERY: QueryM3

ROW	LINE	VOLTS	DEG	CHN	IND	%TW	LOCATION		EXT	EXT	UTIL 1	UTIL 2	CAL #	LEG	PROBE
106	112	0.26	160	P 2	TWD	18	VH2	+0.93	TEC	TEH			10	HOT	600UL
		0.19	150	P 2	TWD	12	VH2	-0.93	TEC	TEH			10	HOT	600UL
		0.17	157	P 2	TWD	13	VH2	-0.93	TEC	TEH			10	HOT	600UL
		0.26	160	P 2	TWD	16	VH2	+0.93	TEC	TEH			10	HOT	600UL
106	142	0.92	105	P 2	TWD	29	VH2	-0.66	TEC	TEH			34	HOT	600UL
		0.92	104	P 2	TWD	29	VH2	-0.66	TEC	TEH			34	HOT	600UL
107	31	0.36	82	P 2	TWD	16	DBH	-1.53	TEH	TEC			29	COLD	600UL
		0.36	93	P 2	TWD	16	DBH	-1.53	TEH	TEC			29	COLD	600UL
107	45	0.56	69	P 2	TWD	22	VH2	-0.85	TEH	TEC			30	COLD	600UL
		0.78	41	P 2	TWD	27	VH2	+0.93	TEH	TEC			30	COLD	600UL
		0.80	39	P 2	TWD	28	VH2	+0.93	TEH	TEC			30	COLD	600UL
		0.57	59	P 2	TWD	22	VH2	-0.85	TEH	TEC			30	COLD	600UL
107	49	0.38	149	P 2	TWD	17	VH2	-0.89	TEC	TEH	NEW		23	HOT	600UL
107	123	0.20	96	P 2	TWD	13	DBH	-0.56	TEC	TEH	NEW		16	HOT	600UL
107	133	0.34	121	P 2	TWD	14	VH2	-0.77	TEC	TEH	NEW		34	HOT	600UL
107	139	0.46	112	P 2	TWD	18	09H	+0.46	TEC	TEH			34	HOT	600UL
		0.50	110	P 2	TWD	19	09H	+0.46	TEC	TEH			34	HOT	600UL
107	141	0.39	82	P 2	TWD	16	VH2	-0.72	TEC	TEH	NEW		34	HOT	600UL
108	50	0.41	138	P 2	TWD	18	VH2	+0.99	TEH	TEC			6	COLD	600UL
		0.40	139	P 2	TWD	18	VH2	+0.99	TEH	TEC			6	COLD	600UL
108	58	0.54	79	P 2	TWD	20	VC3	+0.77	TEH	TEC			3	COLD	600UL
		0.57	54	P 2	TWD	21	VC3	+0.77	TEH	TEC			3	COLD	600UL
108	66	0.50	131	P 2	TWD	20	VH3	+0.80	TEH	TEC	NEW		2	COLD	600UL
108	70	0.35	91	P 2	TWD	16	VH2	-0.86	TEH	TEC	NEW		2	COLD	600UL
108	82	0.34	149	P 2	TWD	15	03C	-1.09	TEC	TEH			3	HOT	600UL
108	138	0.30	115	P 2	TWD	13	08H	-0.98	TEC	TEH			34	HOT	600UL
		0.30	114	P 2	TWD	13	08H	-0.98	TEC	TEH			34	HOT	600UL
109	39	0.21	91	P 2	TWD	10	DBC	-1.53	TEH	TEC	NEW		29	COLD	600UL
109	115	0.25	146	P 2	TWD	15	VH3	+0.78	TEC	TEH	NEW		16	HOT	600UL
109	127	0.14	117	P 2	TWD	10	DBC	-1.62	TEC	TEH			16	HOT	600UL
		0.14	116	P 2	TWD	10	DBC	-1.62	TEC	TEH			16	HOT	600UL
109	137	0.25	117	P 2	TWD	12	08H	+0.92	TEC	TEH			35	HOT	600UL
		0.62	118	P 2	TWD	24	08H	-0.83	TEC	TEH			35	HOT	600UL
		0.25	117	P 2	TWD	11	08H	+0.92	TEC	TEH			35	HOT	600UL
		0.62	118	P 2	TWD	24	08H	-0.83	TEC	TEH			35	HOT	600UL
110	34	0.34	64	P 2	TWD	15	07H	+0.28	TEH	TEC			29	COLD	600UL
		0.34	64	P 2	TWD	14	07H	+0.28	TEH	TEC			29	COLD	600UL
110	54	0.39	136	P 2	TWD	15	VH2	-0.85	TEH	TEC	NEW		5	COLD	600UL
110	66	0.33	107	P 2	TWD	14	VH2	-0.83	TEH	TEC	NEW		1	COLD	600UL
110	70	0.35	113	P 2	TWD	15	VH2	-0.90	TEH	TEC			1	COLD	600UL
		0.35	115	P 2	TWD	15	VH2	-0.90	TEH	TEC			1	COLD	600UL
110	104	0.30	151	P 2	TWD	20	VH2	-0.84	TEC	TEH			10	HOT	600UL
		0.30	151	P 2	TWD	20	VH2	-0.84	TEC	TEH			10	HOT	600UL
110	108	0.44	125	P 2	TWD	16	VH2	-0.83	TEH	TEC			49	COLD	600UL
		0.44	125	P 2	TWD	16	VH2	-0.83	TEH	TEC			49	COLD	600UL
110	124	0.44	126	P 2	TWD	23	VC2	+0.93	TEC	TEH			16	HOT	600UL
		0.64	101	P 2	TWD	29	VC2	-0.95	TEC	TEH			16	HOT	600UL
		0.44	126	P 2	TWD	23	VC2	+0.93	TEC	TEH			16	HOT	600UL
		0.64	100	P 2	TWD	29	VC2	-0.95	TEC	TEH			16	HOT	600UL

MAI, MCI, MMI, MVI, SAI, SCI, SVI, 0-100% twd

QUERY: QueryM3

ROW	LINE	VOLTS	DEG	CHN	IND	%TW	LOCATION		EXT	EXT	UTIL 1	UTIL 2	CAL #	LEG	PROBE
110	130	0.42	104	P 2	TWD	17	VH2	-0.75	TEC	TEH			34	HOT	600UL
		0.42	104	P 2	TWD	17	VH2	-0.75	TEC	TEH			34	HOT	600UL
110	136	0.40	132	P 2	TWD	17	08H	+0.97	TEC	TEH			35	HOT	600UL
		0.43	55	P 2	TWD	19	08H	-0.83	TEC	TEH			35	HOT	600UL
		0.40	132	P 2	TWD	17	08H	+0.97	TEC	TEH			35	HOT	600UL
		0.43	55	P 2	TWD	19	08H	-0.83	TEC	TEH			35	HOT	600UL
110	138	0.31	83	P 2	TWD	14	08H	+0.02	TEC	TEH			35	HOT	600UL
		0.31	83	P 2	TWD	14	08H	+0.02	TEC	TEH			35	HOT	600UL
111	37	0.26	105	P 2	TWD	12	08H	-0.21	TEH	TEC	NEW		30	COLD	600UL
111	43	0.31	118	P 2	TWD	14	VH2	-0.74	TEH	TEC	NEW		30	COLD	600UL
111	113	0.49	152	P 2	TWD	19	VH2	-0.96	TEC	TEH			9	HOT	600UL
		0.34	151	P 2	TWD	14	VH2	+0.87	TEC	TEH			9	HOT	600UL
		0.41	156	P 2	TWD	17	VH2	+0.87	TEC	TEH			9	HOT	600UL
		0.49	154	P 2	TWD	20	VH2	-0.96	TEC	TEH			9	HOT	600UL
111	131	0.36	98	P 2	TWD	14	VH2	-0.77	TEH	TEC	NEW		49	COLD	600UL
111	133	0.37	130	P 2	TWD	15	08H	+0.80	TEC	TEH			34	HOT	600UL
		0.37	130	P 2	TWD	15	08H	+0.80	TEC	TEH			34	HOT	600UL
111	135	0.30	115	P 2	TWD	12	VH2	-0.69	TEC	TEH	NEW		34	HOT	600UL
111	137	0.55	120	P 2	TWD	21	VH2	+0.69	TEC	TEH			34	HOT	600UL
		0.55	120	P 2	TWD	21	VH2	+0.69	TEC	TEH			34	HOT	600UL
111	141	0.32	78	P 2	TWD	13	DBH	-1.51	TEC	TEH			34	HOT	600UL
		0.32	78	P 2	TWD	13	DBH	-1.51	TEC	TEH			34	HOT	600UL
111	143	0.30	109	P 2	TWD	14	VC3	+0.90	TEC	TEH			35	HOT	600UL
		0.30	116	P 2	TWD	13	VC3	+0.90	TEC	TEH			35	HOT	600UL
112	120	0.30	96	P 2	TWD	12	VH2	-0.87	TEC	TEH			15	HOT	600UL
		0.31	130	P 2	TWD	12	VH2	-0.87	TEC	TEH			15	HOT	600UL
112	124	0.57	92	P 2	TWD	20	VH2	-0.98	TEC	TEH			15	HOT	600UL
		0.57	94	P 2	TWD	20	VH2	-0.98	TEC	TEH			15	HOT	600UL
112	132	0.53	138	P 2	TWD	20	08H	+0.90	TEC	TEH			34	HOT	600UL
		0.67	94	P 2	TWD	24	07H	+0.88	TEC	TEH			34	HOT	600UL
		0.53	138	P 2	TWD	20	08H	+0.90	TEC	TEH			34	HOT	600UL
		0.67	94	P 2	TWD	24	07H	+0.88	TEC	TEH			34	HOT	600UL
		0.43	99	P 2	TWD	17	VH2	+0.74	TEC	TEH	NEW		34	HOT	600UL
112	142	0.36	161	P 2	TWD	16	VC2	-0.90	TEC	TEH			35	HOT	600UL
		0.53	12	P 2	TWD	21	DBC	+2.24	TEC	TEH	NEW		35	HOT	600UL
		0.36	161	P 2	TWD	15	VC2	-0.90	TEC	TEH			35	HOT	600UL
113	67	0.51	113	P 2	TWD	21	04C	+0.24	TEH	TEC			2	COLD	600UL
113	129	0.44	73	P 2	TWD	23	09H	+0.86	TEC	TEH			16	HOT	600UL
		0.37	151	P 2	TWD	21	VH2	+0.88	TEC	TEH			16	HOT	600UL
		0.37	152	P 2	TWD	20	VH2	+0.88	TEC	TEH			16	HOT	600UL
		0.42	68	P 2	TWD	22	09H	+0.86	TEC	TEH			16	HOT	600UL
114	40	0.44	147	P 2	TWD	18	VH2	-0.79	TEH	TEC			29	COLD	600UL
		0.44	146	P 2	TWD	19	VH2	-0.79	TEH	TEC			29	COLD	600UL
114	90	0.25	105	P 2	TWD	14	DBH	+2.17	TEC	TEH			4	HOT	600UL
		0.25	105	P 2	TWD	14	DBH	+2.17	TEC	TEH			4	HOT	600UL
114	104	0.49	136	P 2	TWD	27	VH2	-0.86	TEC	TEH			10	HOT	600UL
		0.49	136	P 2	TWD	27	VH2	-0.86	TEC	TEH			10	HOT	600UL
114	106	0.34	18	P 2	TWD	22	DBH	+2.00	TEC	TEH	NEW		10	HOT	600UL
114	114	0.27	138	P 2	TWD	15	VH2	+0.93	TEC	TEH			10	HOT	600UL
		0.54	67	P 2	TWD	26	VH2	-0.89	TEC	TEH			10	HOT	600UL
		0.27	54	P 2	TWD	16	VH2	+0.93	TEC	TEH			10	HOT	600UL
		0.52	78	P 2	TWD	26	VH2	-0.89	TEC	TEH			10	HOT	600UL

MAI, MCI, MMI, MVI, SAI, SCI, SVI, 0-100% twd

QUERY: QueryM3

ROW	LINE	VOLTS	DEG	CHN	IND	%TW	LOCATION		EXT	EXT	UTIL 1	UTIL 2	CAL #	LEG	PROBE
114	120	0.25	148	P 2	TWD	15	VH2	-0.91	TEC	TEH			16	HOT	600UL
		0.24	156	P 2	TWD	15	VH2	-0.91	TEC	TEH			16	HOT	600UL
114	130	0.40	101	P 2	TWD	16	09H	-0.89	TEC	TEH			34	HOT	600UL
		0.40	101	P 2	TWD	16	09H	-0.89	TEC	TEH			34	HOT	600UL
114	132	0.84	143	P 2	TWD	29	07H	+0.74	TEC	TEH			35	HOT	600UL
		0.84	142	P 2	TWD	29	07H	+0.74	TEC	TEH			35	HOT	600UL
114	140	0.93	112	P 2	TWD	30	VH2	-0.85	TEC	TEH			34	HOT	600UL
		0.93	112	P 2	TWD	30	VH2	-0.85	TEC	TEH			34	HOT	600UL
		0.87	112	P 2	TWD	27	VH2	-0.85	TEH	TEC			49	COLD	600UL
115	45	0.66	130	P 2	TWD	24	VH1	-0.99	TEH	TEC			30	COLD	600UL
		0.66	130	P 2	TWD	24	VH1	-0.99	TEH	TEC			30	COLD	600UL
115	127	0.39	141	P 2	TWD	15	09H	+0.64	TEC	TEH			15	HOT	600UL
		0.37	144	P 2	TWD	15	09H	+0.64	TEC	TEH			15	HOT	600UL
115	129	0.30	140	P 2	TWD	12	09H	-0.89	TEC	TEH			15	HOT	600UL
		0.30	145	P 2	TWD	12	09H	-0.89	TEC	TEH			15	HOT	600UL
115	133	0.43	51	P 2	TWD	17	VH2	+0.69	TEC	TEH	NEW		34	HOT	600UL
116	88	0.46	168	P 2	TWD	18	VH1	-1.23	TEC	TEH	NEW		3	HOT	600UL
116	110	0.59	105	P 2	TWD	22	VH1	-1.25	TEC	TEH	NEW		9	HOT	600UL
116	124	0.39	115	P 2	TWD	14	09H	+0.68	TEC	TEH			15	HOT	600UL
		0.42	79	P 2	TWD	16	08H	+0.83	TEC	TEH			15	HOT	600UL
		0.29	159	P 2	TWD	12	08H	+0.38	TEC	TEH			15	HOT	600UL
		0.42	79	P 2	TWD	16	08H	+0.83	TEC	TEH			15	HOT	600UL
		0.21	152	P 2	TWD	8	08H	+0.38	TEC	TEH			15	HOT	600UL
		0.39	115	P 2	TWD	14	09H	+0.68	TEC	TEH			15	HOT	600UL
116	126	0.29	29	P 2	TWD	17	VH2	-1.10	TEC	TEH			16	HOT	600UL
		0.23	151	P 2	TWD	15	08H	+0.93	TEC	TEH			16	HOT	600UL
		0.30	36	P 2	TWD	18	VH2	-1.10	TEC	TEH			16	HOT	600UL
		0.23	152	P 2	TWD	14	08H	+0.93	TEC	TEH			16	HOT	600UL
116	128	0.38	121	P 2	TWD	21	09H	+0.76	TEC	TEH			16	HOT	600UL
		0.31	112	P 2	TWD	18	08H	+0.92	TEC	TEH			16	HOT	600UL
		0.22	39	P 2	TWD	14	09H	-1.18	TEC	TEH			16	HOT	600UL
		0.39	113	P 2	TWD	21	09H	+0.76	TEC	TEH			16	HOT	600UL
		0.21	26	P 2	TWD	13	09H	-1.18	TEC	TEH			16	HOT	600UL
		0.31	114	P 2	TWD	18	08H	+0.92	TEC	TEH			16	HOT	600UL
117	55	0.42	70	P 2	TWD	16	VC1	+0.74	TEH	TEC	NEW		5	COLD	600UL
117	123	0.67	104	P 2	TWD	22	08H	+0.85	TEC	TEH			15	HOT	600UL
		0.66	108	P 2	TWD	22	08H	+0.85	TEC	TEH			15	HOT	600UL
117	129	0.26	113	P 2	TWD	16	08H	+0.97	TEC	TEH			16	HOT	600UL
		0.26	113	P 2	TWD	16	08H	+0.97	TEC	TEH			16	HOT	600UL
118	46	0.41	97	P 2	TWD	17	VH1	-0.89	TEH	TEC			29	COLD	600UL
		0.20	142	P 2	TWD	10	VH1	+0.85	TEH	TEC			29	COLD	600UL
		0.40	95	P 2	TWD	17	VH1	-0.89	TEH	TEC			29	COLD	600UL
		0.21	132	P 2	TWD	10	VH1	+0.85	TEH	TEC			29	COLD	600UL
118	54	0.29	137	P 2	TWD	13	VH2	-0.91	TEC	TEH			23	HOT	600UL
		0.27	141	P 2	TWD	13	VH2	-0.91	TEC	TEH			23	HOT	600UL
		0.62	29	P 2	TWD	24	VH1	-0.83	TEC	TEH	NEW		23	HOT	600UL
118	58	0.45	30	P 2	TWD	18	VH2	+0.89	TEH	TEC	NEW		3	COLD	600UL
118	60	0.45	46	P 2	TWD	18	VH1	-0.90	TEH	TEC			3	COLD	600UL
		0.34	68	P 2	TWD	14	VH2	-0.83	TEH	TEC			3	COLD	600UL
		0.40	59	P 2	TWD	16	VH1	-0.90	TEH	TEC			3	COLD	600UL
		0.29	67	P 2	TWD	12	VH2	-0.83	TEH	TEC			3	COLD	600UL
118	100	0.58	92	P 2	TWD	28	VH1	-0.72	TEC	TEH			6	HOT	600UL
		0.58	92	P 2	TWD	28	VH1	-0.72	TEC	TEH			6	HOT	600UL
119	57	0.30	87	2	SAI		TSH	+6.16	TSH	TSH	0.0	8.59	57	HOT	580PP

MAI, MCI, MMI, MVI, SAI, SCI, SVI, 0-100% twd

QUERY: QueryM3

ROW	LINE	VOLTS	DEG	CHN	IND	%TW	LOCATION		EXT	EXT	UTIL 1	UTIL 2	CAL #	LEG	PROBE
119	123	0.57	99	P 2	TWD	27	09H	+0.76	TEC	TEH			16	HOT	600UL
		0.57	99	P 2	TWD	27	09H	+0.76	TEC	TEH			16	HOT	600UL
119	125	0.26	127	P 2	TWD	10	09H	+0.06	TEC	TEH			15	HOT	600UL
		0.35	157	P 2	TWD	14	09H	-0.98	TEC	TEH			15	HOT	600UL
		0.39	150	P 2	TWD	15	09H	-0.98	TEC	TEH			15	HOT	600UL
		0.25	112	P 2	TWD	11	09H	+0.06	TEC	TEH			15	HOT	600UL
119	139	0.62	134	P 2	TWD	24	10C	-1.25	TEC	TEH			35	HOT	600UL
		0.62	134	P 2	TWD	24	10C	-1.25	TEC	TEH	LOCOK		35	HOT	600UL
120	76	0.38	142	P 2	TWD	18	VH1	-0.79	TEH	TEC	NEW		6	COLD	600UL
		0.35	122	P 2	TWD	17	VH2	-0.84	TEH	TEC	NEW		6	COLD	600UL
120	80	0.26	42	P 2	TWD	11	DBH	+1.37	TEC	TEH			3	HOT	600UL
		0.26	42	P 2	TWD	11	DBH	+1.37	TEC	TEH			3	HOT	600UL
120	92	0.71	153	P 2	TWD	23	VH1	-0.86	TEC	TEH			5	HOT	600UL
		0.42	116	P 2	TWD	14	VH1	+0.80	TEC	TEH			5	HOT	600UL
		0.90	134	P 2	TWD	28	VH1	-0.86	TEC	TEH			5	HOT	600UL
		0.42	117	P 2	TWD	16	VH1	+0.80	TEC	TEH			5	HOT	600UL
120	112	0.28	143	P 2	TWD	13	10H	+1.27	TEC	TEH	LOCOK		9	HOT	600UL
		0.28	143	P 2	TWD	13	10H	+1.24	TEC	TEH			9	HOT	600UL
120	134	0.33	127	P 2	TWD	14	VH1	-1.00	TEC	TEH	NEW		34	HOT	600UL
121	113	0.33	121	P 2	TWD	21	VH1	-1.02	TEC	TEH			10	HOT	600UL
		0.33	121	P 2	TWD	21	VH1	-1.02	TEC	TEH			10	HOT	600UL
121	119	0.44	96	P 2	TWD	23	10H	+0.02	TEC	TEH			16	HOT	600UL
		0.31	158	P 2	TWD	18	09H	-0.69	TEC	TEH			16	HOT	600UL
		0.39	138	P 2	TWD	21	08H	+0.80	TEC	TEH			16	HOT	600UL
		0.77	115	P 2	TWD	32	08H	+0.30	TEC	TEH			16	HOT	600UL
		0.87	101	P 2	TWD	27	08H	+0.30	TEH	TEC			49	COLD	600UL
		0.55	108	P 2	TWD	19	08H	+0.80	TEH	TEC			49	COLD	600UL
		0.34	99	P 2	TWD	13	09H	-0.69	TEH	TEC			49	COLD	600UL
		0.58	85	P 2	TWD	20	10H	+0.02	TEH	TEC			49	COLD	600UL
		0.57	64	P 2	TWD	27	10H	+0.02	TEC	TEH			16	HOT	600UL
		0.31	156	P 2	TWD	18	09H	-0.69	TEC	TEH			16	HOT	600UL
		0.39	138	P 2	TWD	21	08H	+0.80	TEC	TEH			16	HOT	600UL
		0.77	115	P 2	TWD	32	08H	+0.30	TEC	TEH			16	HOT	600UL
121	121	0.40	51	P 2	TWD	22	09H	+0.43	TEC	TEH			16	HOT	600UL
		0.42	130	P 2	TWD	22	10H	-0 19	TEC	TEH			16	HOT	600UL
		0.43	125	P 2	TWD	23	10H	-0.19	TEC	TEH			16	HOT	600UL
		0.41	50	P 2	TWD	22	09H	+0.43	TEC	TEH			16	HOT	600UL
122	50	0.27	104	P 2	TWD	13	08C	+0.93	TEC	TEH	NEW		23	HOT	600UL
122	72	0.36	149	P 2	TWD	16	VH1	-1.03	TEH	TEC			1	COLD	600UL
		0.37	149	P 2	TWD	16	VH1	-1.03	TEH	TEC			1	COLD	600UL
122	78	0.33	143	P 2	TWD	18	VH1	-0.83	TEC	TEH			4	HOT	600UL
		0.33	143	P 2	TWD	18	VH1	-0.83	TEC	TEH			4	HOT	600UL
122	86	0.18	121	P 2	TWD	11	DBH	+0.17	TEC	TEH			4	HOT	600UL
		0.18	122	P 2	TWD	10	DBH	+0.17	TEC	TEH			4	HOT	600UL
122	112	0.44	103	P 2	TWD	25	10H	+0.50	TEC	TEH			10	HOT	600UL
		0.44	103	P 2	TWD	23	10H	+0.50	TEC	TEH			10	HOT	600UL
122	120	0.36	140	P 2	TWD	14	08H	-0.84	TEC	TEH			15	HOT	600UL
		0.34	49	P 2	TWD	14	08H	+0.45	TEC	TEH			15	HOT	600UL
		0.36	145	P 2	TWD	14	08H	-0.84	TEC	TEH			15	HOT	600UL
		0.35	48	P 2	TWD	14	08H	+0.45	TEC	TEH			15	HOT	600UL
122	122	0.48	124	P 2	TWD	17	10C	+0.85	TEC	TEH			15	HOT	600UL
		0.48	124	P 2	TWD	18	10C	+0.85	TEC	TEH			15	HOT	600UL
122	124	0.29	159	P 2	TWD	17	VH2	-0.76	TEC	TEH			16	HOT	600UL
		0.28	160	P 2	TWD	17	VH2	-0.76	TEC	TEH			16	HOT	600UL
123	115	0.29	58	P 2	TWD	11	09H	+0.42	TEC	TEH			15	HOT	600UL

MAI, MCI, MMI, MVI, SAI, SCI, SVI, 0-100% twd

QUERY: QueryM3

ROW	LINE	VOLTS	DEG	CHN	IND	%TW	LOCATION		EXT	EXT	UTIL 1	UTIL 2	CAL #	LEG	PROBE
		0.29	58	P 2	TWD	12	09H	+0.42	TEC	TEH			15	HOT	600UL
123	117	0.53	125	P 2	TWD	19	09H	-0.62	TEC	TEH			15	HOT	600UL
		0.55	123	P 2	TWD	19	09H	-0.62	TEC	TEH			15	HOT	600UL
123	119	0.53	88	P 2	TWD	19	09H	+0.49	TEC	TEH			15	HOT	600UL
		0.18	37	P 2	TWD	6	09H	-0.13	TEC	TEH			15	HOT	600UL
		0.53	88	P 2	TWD	19	09H	+0.49	TEC	TEH			15	HOT	600UL
		0.21	42	P 2	TWD	8	09H	-0.13	TEC	TEH			15	HOT	600UL
123	131	0.34	131	P 2	TWD	14	VH2	-1.13	TEC	TEH	NEW		34	HOT	600UL
124	58	0.42	117	P 2	TWD	16	VH1	-0.85	TEH	TEC			3	COLD	600UL
		0.38	95	P 2	TWD	15	VH1	+0.79	TEH	TEC			3	COLD	600UL
		0.40	91	P 2	TWD	16	VH1	-0.85	TEH	TEC			3	COLD	600UL
		0.38	49	P 2	TWD	16	VH1	+0.79	TEH	TEC			3	COLD	600UL
		0.38	62	P 2	TWD	16	VH2	-0.81	TEH	TEC	NEW		3	COLD	600UL
124	78	0.34	153	P 2	TWD	15	VH1	-1.08	TEC	TEH			3	HOT	600UL
		0.34	154	P 2	TWD	14	VH1	-1.08	TEC	TEH			3	HOT	600UL
124	114	0.25	161	P 2	TWD	11	05H	+0.76	TEC	TEH			9	HOT	600UL
124	116	0.35	98	P 2	TWD	14	09H	+0.11	TEC	TEH			15	HOT	600UL
		0.35	94	P 2	TWD	14	09H	+0.11	TEC	TEH			15	HOT	600UL
		0.30	31	P 2	TWD	11	10H	-1.23	TEC	TEH			15	HOT	600UL
		0.53	97	P 2	TWD	19	08H	+0.85	TEC	TEH			15	HOT	600UL
		0.53	97	P 2	TWD	19	08H	+0.85	TEC	TEH			15	HOT	600UL
		0.30	31	P 2	TWD	11	10H	-1.23	TEC	TEH			15	HOT	600UL
124	126	0.27	98	P 2	TWD	11	VH2	-0.98	TEC	TEH			15	HOT	600UL
		0.33	115	P 2	TWD	13	VH1	-1.04	TEC	TEH			15	HOT	600UL
		0.45	130	P 2	TWD	17	VH1	-1.04	TEC	TEH			15	HOT	600UL
		0.44	96	P 2	TWD	16	VH2	-0.98	TEC	TEH			15	HOT	600UL
125	57	0.46	126	P 2	TWD	20	VH1	+0.72	TEC	TEH			23	HOT	600UL
		0.69	118	P 2	TWD	26	VH1	-0.91	TEC	TEH			23	HOT	600UL
		0.69	118	P 2	TWD	26	VH1	-0.91	TEC	TEH			23	HOT	600UL
		0.45	129	P 2	TWD	20	VH1	+0.72	TEC	TEH			23	HOT	600UL
125	65	0.37	155	P 2	TWD	16	VH1	+0.73	TEH	TEC	NEW		2	COLD	600UL
125	117	0.29	153	P 2	TWD	17	08H	+0.76	TEC	TEH			16	HOT	600UL
		0.31	154	P 2	TWD	18	08H	+0.76	TEC	TEH			16	HOT	600UL
126	56	0.30	135	P 2	TWD	14	VH1	+1.08	TEC	TEH			23	HOT	600UL
		0.30	135	P 2	TWD	14	VH1	+1.08	TEC	TEH			23	HOT	600UL
126	62	0.41	39	P 2	TWD	18	VH1	-0.75	TEH	TEC			1	COLD	600UL
		0.40	45	P 2	TWD	17	VH1	-0.75	TEH	TEC			1	COLD	600UL
126	64	0.93	117	P 2	TWD	31	VH1	-1.04	TEH	TEC			1	COLD	600UL
		0.96	115	P 2	TWD	31	VH1	-1.04	TEC	TEH			23	HOT	600UL
		0.93	119	P 2	TWD	31	VH1	-1.04	TEH	TEC			1	COLD	600UL
126	78	0.37	139	P 2	TWD	19	VH1	-0.82	TEC	TEH			4	HOT	600UL
		0.89	57	P 2	TWD	34	VH1	+0.99	TEC	TEH			4	HOT	600UL
		0.43	122	P 2	TWD	16	VH1	-0.82	TEH	TEC			47	COLD	600UL
		1.00	41	P 2	TWD	29	VH1	+0.99	TEH	TEC			47	COLD	600UL
126	84	0.29	70	P 2	TWD	17	VH2	-0.96	TEC	TEH			4	HOT	600UL
		0.28	153	P 2	TWD	16	VH1	+0.86	TEC	TEH			4	HOT	600UL
		0.28	152	P 2	TWD	16	VH1	+0.86	TEC	TEH			4	HOT	600UL
		0.29	70	P 2	TWD	16	VH2	-0.96	TEC	TEH			4	HOT	600UL
126	86	0.33	143	P 2	TWD	18	VH1	-1.00	TEC	TEH			4	HOT	600UL
		0.30	120	P 2	TWD	17	VH1	+0.98	TEC	TEH			4	HOT	600UL
		0.30	122	P 2	TWD	17	VH1	+0.98	TEC	TEH			4	HOT	600UL
		0.33	143	P 2	TWD	18	VH1	-1.00	TEC	TEH			4	HOT	600UL
126	96	0.35	80	P 2	TWD	20	VH2	-1.05	TEC	TEH			6	HOT	600UL
		0.27	26	P 2	TWD	17	VH2	-1.05	TEC	TEH			6	HOT	600UL
126	98	0.55	128	P 2	TWD	27	VH1	-1.19	TEC	TEH			6	HOT	600UL
		0.45	125	P 2	TWD	24	VH2	-1.13	TEC	TEH			6	HOT	600UL

MAI, MCI, MMI, MVI, SAI, SCI, SVI, 0-100% twd

QUERY: QueryM3

ROW	LINE	VOLTS	DEG	CHN	IND	%TW	LOCATION		EXT	EXT	UTIL 1	UTIL 2	CAL #	LEG	PROBE
		0.47	123	P 2	TWD 25	VH2		-1.13	TEC	TEH			6	HOT	600UL
		0.55	129	P 2	TWD 27	VH1		-1.19	TEC	TEH			6	HOT	600UL
126	104	0.38	65	P 2	TWD 23	VH2		-0.96	TEC	TEH			10	HOT	600UL
		0.51	62	P 2	TWD 28	VH2		-0.96	TEC	TEH			10	HOT	600UL
126	108	0.33	145	P 2	TWD 21	VH2		-1.00	TEC	TEH			10	HOT	600UL
		0.53	92	P 2	TWD 28	10H		+0.02	TEC	TEH			10	HOT	600UL
		0.42	138	P 2	TWD 25	VH1		-1.24	TEC	TEH			10	HOT	600UL
		0.27	47	P 2	TWD 18	VH2		-1.00	TEC	TEH			10	HOT	600UL
		0.53	92	P 2	TWD 28	10H		+0.02	TEC	TEH			10	HOT	600UL
		0.46	146	P 2	TWD 24	VH1		-1.24	TEC	TEH			10	HOT	600UL
126	112	0.65	138	P 2	TWD 32	10H		+0.98	TEC	TEH			10	HOT	600UL
		0.27	144	P 2	TWD 18	09H		-0.39	TEC	TEH			10	HOT	600UL
		0.32	42	P 2	TWD 21	08H		-0.59	TEC	TEH			10	HOT	600UL
		0.27	144	P 2	TWD 18	09H		-0.39	TEC	TEH			10	HOT	600UL
		0.32	42	P 2	TWD 21	08H		-0.59	TEC	TEH			10	HOT	600UL
		0.78	136	P 2	TWD 32	10H		+0.98	TEC	TEH			10	HOT	600UL
		0.32	33	P 2	TWD 12	08H		-0.59	TEH	TEC			49	COLD	600UL
		0.30	124	P 2	TWD 11	09H		-0.39	TEH	TEC			49	COLD	600UL
		0.84	105	P 2	TWD 26	10H		+0.98	TEH	TEC			49	COLD	600UL
126	114	0.34	125	P 2	TWD 19	08H		+0.89	TEC	TEH			10	HOT	600UL
		0.34	141	P 2	TWD 19	08H		+0.89	TEC	TEH			10	HOT	600UL
126	122	0.24	81	P 2	TWD 15	VH2		-1.02	TEC	TEH			16	HOT	600UL
		0.41	112	P 2	TWD 22	VH1		-0.93	TEC	TEH			16	HOT	600UL
		0.30	33	P 2	TWD 18	VH2		-1.02	TEC	TEH			16	HOT	600UL
		0.40	112	P 2	TWD 22	VH1		-0.93	TEC	TEH			16	HOT	600UL
126	124	0.16	78	P 2	TWD 11	VH2		-1.17	TEC	TEH			16	HOT	600UL
		0.25	61	P 2	TWD 15	VH1		-1.22	TEC	TEH			16	HOT	600UL
		0.16	61	P 2	TWD 11	VH2		-1.17	TEC	TEH			16	HOT	600UL
		0.23	45	P 2	TWD 15	VH1		-1.22	TEC	TEH			16	HOT	600UL
126	132	0.35	45	P 2	TWD 16	VH2		-0.92	TEC	TEH			35	HOT	600UL
		0.35	45	P 2	TWD 15	VH2		-0.92	TEC	TEH			35	HOT	600UL
127	51	0.35	28	P 2	TWD 16	DBH		-1.40	TEC	TEH	NEW		23	HOT	600UL
127	61	0.38	110	P 2	TWD 17	10H		+0.43	TEH	TEC			1	COLD	600UL
		0.47	114	P 2	TWD 19	10H		+0.43	TEH	TEC			1	COLD	600UL
127	63	0.40	115	P 2	TWD 17	VH1		+1.02	TEH	TEC			1	COLD	600UL
		0 28	101	P 2	TWD 13	VH1		-0.68	TEH	TEC			1	COLD	600UL
		0.28	106	P 2	TWD 12	VH1		-0.68	TEH	TEC			1	COLD	600UL
		0.41	118	P 2	TWD 17	VH1		+1.02	TEH	TEC			1	COLD	600UL
127	65	0.52	143	P 2	TWD 21	VH1		+0.77	TEH	TEC	NEW		1	COLD	600UL
127	67	0.33	118	P 2	TWD 15	VH1		+0.11	TEH	TEC			1	COLD	600UL
		0.38	113	P 2	TWD 16	VH1		+0.11	TEH	TEC			1	COLD	600UL
127	69	0.40	105	P 2	TWD 17	VH1		-0.92	TEH	TEC			1	COLD	600UL
		0.35	126	P 2	TWD 15	VH1		-0.92	TEH	TEC			1	COLD	600UL
127	79	0.76	129	P 2	TWD 26	VH1		+0.88	TEC	TEH			3	HOT	600UL
		0.76	132	P 2	TWD 26	VH1		+0.88	TEC	TEH			3	HOT	600UL
127	85	0.69	151	P 2	TWD 24	VH1		-0.85	TEC	TEH			3	HOT	600UL
		0.69	151	P 2	TWD 24	VH1		-0.85	TEC	TEH			3	HOT	600UL
127	101	0.29	161	P 2	TWD 12	VH1		-0.76	TEC	TEH			5	HOT	600UL
		0.37	157	P 2	TWD 15	VH1		-0.76	TEC	TEH			5	HOT	600UL
127	111	0.52	101	P 2	TWD 21	10H		+0.21	TEC	TEH			9	HOT	600UL
		0.53	103	P 2	TWD 21	09H		-0.23	TEC	TEH			9	HOT	600UL
		0.52	101	P 2	TWD 21	10H		+0.21	TEC	TEH			9	HOT	600UL
		0.53	103	P 2	TWD 21	09H		-0.23	TEC	TEH			9	HOT	600UL
127	113	0.37	91	P 2	TWD 15	08H		+0.83	TEC	TEH			9	HOT	600UL
		0.31	147	P 2	TWD 13	09H		-0.87	TEC	TEH			9	HOT	600UL
		0.44	118	P 2	TWD 18	09H		-0.87	TEC	TEH			9	HOT	600UL
		0.36	79	P 2	TWD 15	08H		+0.83	TEC	TEH			9	HOT	600UL

MAI, MCI, MMI, MVI, SAI, SCI, SVI, 0-100% twd

QUERY: QueryM3

ROW	LINE	VOLTS	DEG	CHN	IND	%TW	LOCATION		EXT	EXT	UTIL 1	UTIL 2	CAL #	LEG	PROBE
127	115	0.36	154	P 2	TWD	14	08H	+0.70	TEC	TEH			15	HOT	600UL
		0.37	80	P 2	TWD	15	08H	-0.56	TEC	TEH			15	HOT	600UL
		0.37	80	P 2	TWD	14	08H	-0.56	TEC	TEH			15	HOT	600UL
		0.35	158	P 2	TWD	13	08H	+0.70	TEC	TEH			15	HOT	600UL
128	62	0.41	133	P 2	TWD	18	VH2	-0.86	TEH	TEC			2	COLD	600UL
		0.41	133	P 2	TWD	18	VH2	-0.86	TEH	TEC			2	COLD	600UL
128	72	0.55	71	P 2	TWD	22	VH2	-0.86	TEH	TEC			2	COLD	600UL
		0.55	66	P 2	TWD	22	VH2	-0.86	TEH	TEC			2	COLD	600UL
		0.52	78	P 2	TWD	21	VH1	-0.82	TEH	TEC	NEW		2	COLD	600UL
128	76	0.44	143	P 2	TWD	19	VH1	+0.81	TEH	TEC			6	COLD	600UL
		0.44	146	P 2	TWD	20	VH1	+0.81	TEH	TEC			6	COLD	600UL
128	80	0.93	136	P 2	TWD	29	VH1	-0.83	TEC	TEH			3	HOT	600UL
		0.58	94	P 2	TWD	21	VH1	+0.87	TEC	TEH			3	HOT	600UL
		0.58	94	P 2	TWD	21	VH1	+0.87	TEC	TEH			3	HOT	600UL
		0.95	135	P 2	TWD	29	VH1	-0.83	TEC	TEH			3	HOT	600UL
128	88	0.61	150	P 2	TWD	22	VH1	-0.90	TEC	TEH	NEW		3	HOT	600UL
128	90	0.68	129	P 2	TWD	24	VH1	-0.96	TEC	TEH			3	HOT	600UL
		0.69	134	P 2	TWD	24	VH1	-0.96	TEC	TEH			3	HOT	600UL
128	110	0.33	124	P 2	TWD	14	10H	+0.64	TEC	TEH			9	HOT	600UL
		0.36	106	P 2	TWD	16	VH2	-0.89	TEC	TEH			9	HOT	600UL
		0.26	152	P 2	TWD	12	10H	-0.73	TEC	TEH			9	HOT	600UL
		0.39	117	P 2	TWD	17	VH2	-0.89	TEC	TEH			9	HOT	600UL
		0.33	120	P 2	TWD	14	10H	+0.64	TEC	TEH			9	HOT	600UL
		0.26	152	P 2	TWD	12	10H	-0.73	TEC	TEH			9	HOT	600UL
128	116	0.37	134	P 2	TWD	14	09C	+0.95	TEC	TEH			15	HOT	600UL
		0.38	130	P 2	TWD	15	VH1	+0.74	TEC	TEH			15	HOT	600UL
		0.36	144	P 2	TWD	14	09C	+0.95	TEC	TEH			15	HOT	600UL
		0.38	139	P 2	TWD	15	VH1	+0.74	TEC	TEH			15	HOT	600UL
129	61	0.25	66	P 2	TWD	12	VH1	-0.65	TEH	TEC			2	COLD	600UL
		0.25	66	P 2	TWD	12	VH1	-0.65	TEH	TEC			2	COLD	600UL
129	63	0.50	81	P 2	TWD	20	VH1	+0.92	TEH	TEC			2	COLD	600UL
		0.37	125	P 2	TWD	16	10H	+0.43	TEH	TEC			2	COLD	600UL
		0.50	81	P 2	TWD	20	VH1	+0.92	TEH	TEC			2	COLD	600UL
		0.37	125	P 2	TWD	16	10H	+0.43	TEH	TEC			2	COLD	600UL
129	79	0.27	160	P 2	TWD	15	VH1	+0.73	TEC	TEH			4	HOT	600UL
		0.27	160	P 2	TWD	15	VH1	+0.73	TEC	TEH			4	HOT	600UL
129	105	0.50	150	P 2	TWD	27	VH1	+0.74	TEC	TEH			10	HOT	600UL
		0.50	150	P 2	TWD	25	VH1	+0.74	TEC	TEH			10	HOT	600UL
129	111	0.35	145	P 2	TWD	19	09H	-0.80	TEC	TEH			10	HOT	600UL
		0.28	136	P 2	TWD	16	09H	+0.48	TEC	TEH			10	HOT	600UL
		0.27	129	P 2	TWD	18	09H	+0.48	TEC	TEH			10	HOT	600UL
		0.31	156	P 2	TWD	20	09H	-0.80	TEC	TEH			10	HOT	600UL
130	54	0.18	16	P 2	TWD	9	DBH	+1.11	TEC	TEH	NEW		23	HOT	600UL
130	56	0.33	147	P 2	TWD	15	VH1	-0.74	TEC	TEH	NEW		23	HOT	600UL
130	60	0.41	126	P 2	TWD	18	VH2	+0.63	TEC	TEH	NEW		23	HOT	600UL
130	62	0.70	110	P 2	TWD	26	VH1	+0.89	TEH	TEC			1	COLD	600UL
		0.69	118	P 2	TWD	25	VH1	+0.89	TEH	TEC			1	COLD	600UL
130	66	0.32	77	P 2	TWD	14	08C	+0.87	TEH	TEC	NEW		1	COLD	600UL
		0.48	86	P 2	TWD	19	VH1	+0.75	TEH	TEC	NEW		1	COLD	600UL
130	68	0.54	112	P 2	TWD	22	VH1	+0.75	TEH	TEC			1	COLD	600UL
		0.55	113	P 2	TWD	22	VH1	+0.75	TEH	TEC			1	COLD	600UL
		0.22	134	P 2	TWD	9	DBH	-0.04	TEH	TEC	NEW		1	COLD	600UL
130	72	0.49	98	P 2	TWD	20	VH1	+0.90	TEH	TEC			1	COLD	600UL
		0.48	98	P 2	TWD	20	VH1	+0.90	TEH	TEC			1	COLD	600UL

MAI, MCI, MMI, MVI, SAI, SCI, SVI, 0-100% twd

QUERY: QueryM3

ROW	LINE	VOLTS	DEG	CHN	IND	%TW	LOCATION		EXT	EXT	UTIL 1	UTIL 2	CAL #	LEG	PROBE
130	74	0.36	139	P 2	TWD	16	VH1	-1.00	TEH	TEC			1	COLD	600UL
		0.38	135	P 2	TWD	17	VH2	-0.81	TEH	TEC			1	COLD	600UL
		0.36	140	P 2	TWD	15	VH1	-1.00	TEH	TEC			1	COLD	600UL
		0.38	132	P 2	TWD	16	VH2	-0.81	TEH	TEC			1	COLD	600UL
130	78	0.62	129	P 2	TWD	23	VH1	+0.77	TEC	TEH			3	HOT	600UL
		0.59	136	P 2	TWD	22	VH1	+0.77	TEC	TEH			3	HOT	600UL
130	92	0.61	101	P 2	TWD	28	VH1	-0.86	TEC	TEH			6	HOT	600UL
		0.61	101	P 2	TWD	28	VH1	-0.86	TEC	TEH			6	HOT	600UL
130	94	0.27	162	P 2	TWD	17	VH1	-0.86	TEC	TEH			6	HOT	600UL
		0.51	115	P 2	TWD	26	VH1	+0.72	TEC	TEH			6	HOT	600UL
		0.56	107	P 2	TWD	27	VH1	+0.72	TEC	TEH			6	HOT	600UL
		0.27	162	P 2	TWD	17	VH1	-0.86	TEC	TEH			6	HOT	600UL
130	108	0.35	146	P 2	TWD	22	VH1	-0.88	TEC	TEH	NEW		10	HOT	600UL
130	110	0.62	133	P 2	TWD	31	10H	+0.89	TEC	TEH			10	HOT	600UL
		0.62	133	P 2	TWD	31	10H	+0.89	TEC	TEH			10	HOT	600UL
		0.57	90	P 2	TWD	20	10H	+0.89	TEH	TEC			49	COLD	600UL
131	49	0.26	27	P 2	TWD	14	DBH	+1.39	TEC	TEH	NEW		37	HOT	600UL
131	79	0.36	127	P 2	TWD	14	VH1	+0.67	TEC	TEH			32	HOT	600UL
		0.35	90	P 2	TWD	14	VH1	+0.67	TEC	TEH			32	HOT	600UL
131	101	0.33	116	P 2	TWD	13	VH1	-0.80	TEC	TEH			32	HOT	600UL
		0.31	69	P 2	TWD	12	VH1	-0.80	TEC	TEH			32	HOT	600UL
131	121	0.37	130	P 2	TWD	14	VH2	-0.71	TEH	TEC	NEW		49	COLD	600UL
132	54	0.21	121	P 2	TWD	10	DBH	+1.57	TEC	TEH	NEW		36	HOT	600UL
132	60	0.53	35	P 2	TWD	21	VH1	-0.80	TEC	TEH			36	HOT	600UL
		0.54	36	P 2	TWD	21	VH1	-0.80	TEC	TEH			36	HOT	600UL
132	68	0.34	96	P 2	TWD	15	VH1	-0.78	TEC	TEH			36	HOT	600UL
		0.34	96	P 2	TWD	15	VH1	-0.78	TEC	TEH			36	HOT	600UL
132	72	0.66	138	P 2	TWD	24	VH1	+0.90	TEC	TEH			36	HOT	600UL
		0.66	138	P 2	TWD	24	VH1	+0.90	TEC	TEH			36	HOT	600UL
		0.49	33	P 2	TWD	20	10H	+0.86	TEC	TEH	NEW		36	HOT	600UL
132	74	0.34	100	P 2	TWD	15	VH2	-0.94	TEC	TEH			36	HOT	600UL
		0.30	87	P 2	TWD	14	VH1	-0.86	TEC	TEH			36	HOT	600UL
		0.34	100	P 2	TWD	15	VH2	-0.94	TEC	TEH			36	HOT	600UL
		0.30	87	P 2	TWD	14	VH1	-0.86	TEC	TEH			36	HOT	600UL
132	80	0.37	157	P 2	TWD	15	VH1	-0.82	TEC	TEH			32	HOT	600UL
		0.37	149	P 2	TWD	14	VH1	-0.82	TEC	TEH			32	HOT	600UL
132	82	0.67	122	P 2	TWD	23	VH1	+0.00	TEC	TEH			32	HOT	600UL
		0.67	116	P 2	TWD	23	VH1	+0.00	TEC	TEH			32	HOT	600UL
132	86	0.95	39	P 2	TWD	28	VH2	-0.82	TEC	TEH			32	HOT	600UL
		0.92	34	P 2	TWD	28	VH2	-0.82	TEC	TEH			32	HOT	600UL
132	88	0.67	73	P 2	TWD	23	VH1	+0.86	TEC	TEH			32	HOT	600UL
		0.67	46	P 2	TWD	22	VH1	+0.86	TEC	TEH			32	HOT	600UL
132	90	0.55	133	P 2	TWD	20	VH1	-0.80	TEC	TEH			32	HOT	600UL
		0.54	117	P 2	TWD	19	VH1	-0.80	TEC	TEH			32	HOT	600UL
132	96	0.36	140	P 2	TWD	15	VH1	-0.88	TEC	TEH			32	HOT	600UL
		0.35	115	P 2	TWD	14	VH1	-0.88	TEC	TEH			32	HOT	600UL
132	98	0.62	112	P 2	TWD	22	VH1	-0.84	TEC	TEH			32	HOT	600UL
		0.61	86	P 2	TWD	21	VH1	-0.84	TEC	TEH			32	HOT	600UL
132	100	0.47	131	P 2	TWD	18	VH1	-0.98	TEC	TEH			32	HOT	600UL
		0.71	114	P 2	TWD	24	VH1	-0.98	TEC	TEH			32	HOT	600UL
132	102	0.35	117	P 2	TWD	15	VH2	-0.86	TEH	TEC	NEW		48	COLD	600UL

MAI, MCI, MMI, MVI, SAI, SCI, SVI, 0-100% twd

QUERY: QueryM3

ROW	LINE	VOLTS	DEG	CHN	IND	%TW	LOCATION		EXT	EXT	UTIL 1	UTIL 2	CAL #	LEG	PROBE
132	104	0.46	94	P 2	TWD	17	VH1	-0.91	TEH	TEC			49	COLD	600UL
		0.47	83	P 2	TWD	17	VH1	-0.91	TEH	TEC			49	COLD	600UL
132	106	0.56	132	P 2	TWD	20	VH2	-0.64	TEH	TEC			49	COLD	600UL
		0.56	132	P 2	TWD	20	VH2	-0.64	TEH	TEC			49	COLD	600UL
132	108	0.57	110	P 2	TWD	20	VH1	-0.79	TEH	TEC	NEW		49	COLD	600UL
132	110	0.46	128	P 2	TWD	17	VH2	-0.80	TEH	TEC			49	COLD	600UL
		0 34	67	P 2	TWD	13	08H	+0.82	TEH	TEC			49	COLD	600UL
		0.46	108	P 2	TWD	17	VH1	-0.77	TEH	TEC			49	COLD	600UL
		0.34	67	P 2	TWD	13	08H	+0.82	TEH	TEC			49	COLD	600UL
		0.46	108	P 2	TWD	17	VH1	-0.77	TEH	TEC			49	COLD	600UL
		0.46	128	P 2	TWD	17	VH2	-0.80	TEH	TEC			49	COLD	600UL
132	112	0.31	150	P 2	TWD	12	VH1	-0.79	TEH	TEC	NEW		49	COLD	600UL
		0.49	88	P 2	TWD	18	VH2	+0.00	TEH	TEC	NEW		49	COLD	600UL
132	116	0.50	143	P 2	TWD	18	DBC	+2.08	TEH	TEC			49	COLD	600UL
		0.50	143	P 2	TWD	18	DBC	+2.08	TEH	TEC			49	COLD	600UL
133	53	0.49	118	P 2	TWD	23	DBH	+1.77	TEC	TEH			37	HOT	600UL
		0.48	134	P 2	TWD	23	DBH	+1.77	TEC	TEH			37	HOT	600UL
133	65	0.21	52	P 2	TWD	11	DBH	+1.20	TEC	TEH	NEW		37	HOT	600UL
133	89	0.33	150	P 2	TWD	17	VH2	-0.86	TEC	TEH			33	HOT	600UL
		0.28	161	P 2	TWD	15	VH2	-0.86	TEC	TEH			33	HOT	600UL
133	93	0.18	89	P 2	TWD	8	VH1	-0.98	TEC	TEH			32	HOT	600UL
		0.22	122	P 2	TWD	9	VH1	-0.98	TEC	TEH			32	HOT	600UL
133	95	0.37	157	P 2	TWD	15	VH1	+0.82	TEC	TEH			32	HOT	600UL
		0.37	148	P 2	TWD	14	VH1	+0.82	TEC	TEH			32	HOT	600UL
133	101	0.28	165	P 2	TWD	16	VH1	+0.76	TEC	TEH			33	HOT	600UL
		0.18	170	P 2	TWD	10	VH1	+0.76	TEC	TEH			33	HOT	600UL
133	103	0.53	117	P 2	TWD	19	08H	+0.86	TEH	TEC			49	COLD	600UL
		0.36	132	P 2	TWD	14	VH1	-0.80	TEH	TEC			49	COLD	600UL
		0.53	117	P 2	TWD	19	08H	+0.86	TEH	TEC			49	COLD	600UL
		0.36	132	P 2	TWD	14	VH1	-0.80	TEH	TEC			49	COLD	600UL
133	107	0.32	123	P 2	TWD	15	09H	+0.85	TEH	TEC			50	COLD	600UL
		0.18	151	P 2	TWD	9	09H	-0.83	TEH	TEC			50	COLD	600UL
		0.18	151	P 2	TWD	9	09H	-0.83	TEH	TEC			50	COLD	600UL
		0.32	123	P 2	TWD	15	09H	+0.85	TEH	TEC			50	COLD	600UL
134	56	0.35	155	P 2	TWD	18	DBC	+0.93	TEC	TEH	NEW		37	HOT	600UL
134	68	0.34	153	P 2	TWD	17	VH1	-0.82	TEC	TEH			37	HOT	600UL
		0.45	132	P 2	TWD	22	10H	-0.84	TEC	TEH			37	HOT	600UL
		0.45	132	P 2	TWD	22	10H	-0.84	TEC	TEH			37	HOT	600UL
		0.36	122	P 2	TWD	19	VH1	-0.82	TEC	TEH			37	HOT	600UL
134	74	0.44	107	P 2	TWD	21	VH2	-0.90	TEC	TEH			37	HOT	600UL
		0.59	40	P 2	TWD	26	VH1	-0.82	TEC	TEH			37	HOT	600UL
		0.41	101	P 2	TWD	20	VH2	-0.90	TEC	TEH			37	HOT	600UL
		0.31	35	P 2	TWD	17	VH1	-0.82	TEC	TEH			37	HOT	600UL
134	80	0.20	156	P 2	TWD	12	VH1	+0.72	TEC	TEH			33	HOT	600UL
		0.40	154	P 2	TWD	20	VH1	-0.78	TEC	TEH			33	HOT	600UL
		0.17	153	P 2	TWD	10	VH1	+0.72	TEC	TEH			33	HOT	600UL
		0.32	162	P 2	TWD	17	VH1	-0.78	TEC	TEH			33	HOT	600UL
134	84	0.34	149	P 2	TWD	18	VH1	-0.95	TEC	TEH			33	HOT	600UL
		0.34	149	P 2	TWD	18	VH1	-0.95	TEC	TEH			33	HOT	600UL
134	88	0.33	85	P 2	TWD	17	10H	+0.02	TEC	TEH			33	HOT	600UL
		0.33	84	P 2	TWD	17	10H	+0.02	TEC	TEH			33	HOT	600UL
134	90	0.34	154	P 2	TWD	18	VH1	-1.01	TEC	TEH			33	HOT	600UL
		0.32	151	P 2	TWD	17	VH2	-0.90	TEC	TEH			33	HOT	600UL
		0.26	160	P 2	TWD	14	VH2	-0.90	TEC	TEH			33	HOT	600UL

MAI, MCI, MMI, MVI, SAI, SCI, SVI, 0-100% twd

QUERY: QueryM3

ROW	LINE	VOLTS	DEG	CHN	IND	%TW	LOCATION		EXT	EXT	UTIL 1	UTIL 2	CAL #	LEG	PROBE
		0.29	109	P 2	TWD	16	VH1	-1.01	TEC	TEH			33	HOT	600UL
134	96	0.60	142	P 2	TWD	26	VH1	-0.90	TEC	TEH			33	HOT	600UL
		0.48	151	P 2	TWD	22	VH1	-0.90	TEC	TEH			33	HOT	600UL
134	102	0.47	111	P 2	TWD	19	VH1	-0.78	TEH	TEC	NEW		48	COLD	600UL
		0.42	122	P 2	TWD	17	VH2	-0.84	TEH	TEC	NEW		48	COLD	600UL
134	104	0.32	147	P 2	TWD	15	VH1	-0.67	TEH	TEC	NEW		50	COLD	600UL
		0.26	131	P 2	TWD	12	VH2	-0.84	TEH	TEC	NEW		50	COLD	600UL
134	108	0.28	41	P 2	TWD	14	10H	+0.96	TEH	TEC			50	COLD	600UL
		0.28	41	P 2	TWD	14	10H	+0.96	TEH	TEC			50	COLD	600UL
134	110	0.30	128	P 2	TWD	14	VH2	-0.79	TEH	TEC			50	COLD	600UL
		0.30	128	P 2	TWD	14	VH2	-0.79	TEH	TEC			50	COLD	600UL
134	112	0.41	145	P 2	TWD	18	VH1	-0 67	TEH	TEC			50	COLD	600UL
		0.41	145	P 2	TWD	18	VH1	-0.67	TEH	TEC			50	COLD	600UL
135	57	0.31	142	P 2	TWD	16	10H	+1.24	TEC	TEH	NEW		37	HOT	600UL
135	77	0.38	79	P 2	TWD	19	VH1	+0.82	TEC	TEH			37	HOT	600UL
		0.38	79	P 2	TWD	19	VH1	+0.82	TEC	TEH			37	HOT	600UL
135	89	0.51	102	P 2	TWD	19	VH3	-0.92	TEC	TEH			32	HOT	600UL
		0.49	84	P 2	TWD	18	VH3	-0.92	TEC	TEH			32	HOT	600UL
135	95	0.45	143	P 2	TWD	17	VH1	-1.02	TEC	TEH			32	HOT	600UL
		0.46	141	P 2	TWD	17	VH1	-1.02	TEC	TEH			32	HOT	600UL
135	117	0.35	29	P 2	TWD	16	08H	+0.34	TEH	TEC			50	COLD	600UL
		0.35	29	P 2	TWD	16	08H	+0.34	TEH	TEC			50	COLD	600UL
		0.33	159	P 2	TWD	15	DBC	+0.23	TEH	TEC			50	COLD	600UL
		0.33	159	P 2	TWD	15	DBC	+0.23	TEH	TEC			50	COLD	600UL
136	58	0.19	161	P 2	TWD	9	DBH	+1.89	TEC	TEH	NEW		36	HOT	600UL
		0.27	23	P 2	TWD	12	DBH	-1.86	TEC	TEH	NEW		36	HOT	600UL
136	68	0.35	110	P 2	TWD	15	VH1	-0.95	TEC	TEH			36	HOT	600UL
		0.35	110	P 2	TWD	15	VH1	-0.95	TEC	TEH			36	HOT	600UL
136	74	0.43	78	P 2	TWD	18	VH1	+0.94	TEC	TEH			36	HOT	600UL
		0.43	78	P 2	TWD	18	VH1	+0.94	TEC	TEH			36	HOT	600UL
136	86	0.49	45	P 2	TWD	18	VH2	-1.04	TEC	TEH			32	HOT	600UL
		0.47	44	P 2	TWD	17	VH2	-1.04	TEC	TEH			32	HOT	600UL
136	90	0.63	65	P 2	TWD	22	VH1	+0.70	TEC	TEH			32	HOT	600UL
		0.45	74	P 2	TWD	17	VH2	+0.82	TEC	TEH			32	HOT	600UL
		0.43	53	P 2	TWD	16	VH2	+0.82	TEC	TEH			32	HOT	600UL
		0.61	46	P 2	TWD	21	VH1	+0.70	TEC	TEH			32	HOT	600UL
136	92	0.50	141	P 2	TWD	18	VH1	-1.13	TEC	TEH			32	HOT	600UL
		0.50	141	P 2	TWD	18	VH1	-1.13	TEC	TEH			32	HOT	600UL
136	94	0.36	73	P 2	TWD	19	VH1	-0.98	TEC	TEH			33	HOT	600UL
		0.34	55	P 2	TWD	18	VH1	-0.98	TEC	TEH			33	HOT	600UL
136	114	0.49	45	P 2	TWD	18	DBC	+1.18	TEH	TEC			49	COLD	600UL
		0.49	45	P 2	TWD	18	DBC	+1.18	TEH	TEC			49	COLD	600UL
137	59	0.10	11	P 2	TWD	5	DBC	+1.65	TEC	TEH			37	HOT	600UL
		0.40	149	P 2	TWD	20	DBC	+1.65	TEC	TEH			37	HOT	600UL
137	79	0.32	125	P 2	TWD	17	09H	-0.91	TEC	TEH			33	HOT	600UL
		0.32	126	P 2	TWD	17	09H	-0.91	TEC	TEH			33	HOT	600UL
137	81	0.35	42	P 2	TWD	18	08H	+0.89	TEC	TEH			33	HOT	600UL
		0.35	42	P 2	TWD	18	08H	+0.89	TEC	TEH			33	HOT	600UL
137	83	0.41	52	P 2	TWD	20	09H	+0.76	TEC	TEH			33	HOT	600UL
		0.55	60	P 2	TWD	25	09H	+0.76	TEC	TEH			33	HOT	600UL
137	91	0.32	164	P 2	TWD	17	VH1	+0.80	TEC	TEH			33	HOT	600UL

MAI, MCI, MMI, MVI, SAI, SCI, SVI, 0-100% twd

QUERY: QueryM3

ROW	LINE	VOLTS	DEG	CHN	IND	%TW	LOCATION		EXT	EXT	UTIL 1	UTIL 2	CAL #	LEG	PROBE
		0.55	108	P 2	TWD	25	09H	+0.80	TEC	TEH			33	HOT	600UL
		0.32	164	P 2	TWD	17	VH1	+0.80	TEC	TEH			33	HOT	600UL
		0.52	114	P 2	TWD	24	09H	+0.80	TEC	TEH			33	HOT	600UL
137	115	0.35	52	P 2	TWD	16	VH2	-0.86	TEH	TEC			50	COLD	600UL
		0.35	52	P 2	TWD	16	VH2	-0.86	TEH	TEC			50	COLD	600UL
138	76	0.33	139	P 2	TWD	17	10H	+0.65	TEC	TEH			37	HOT	600UL
		0.33	139	P 2	TWD	17	10H	+0.65	TEC	TEH			37	HOT	600UL
138	84	0.21	115	P 2	TWD	12	VH2	-0.93	TEC	TEH			33	HOT	600UL
		0.23	150	P 2	TWD	13	VH1	-0.91	TEC	TEH			33	HOT	600UL
		0.20	152	P 2	TWD	11	VH2	-0.93	TEC	TEH			33	HOT	600UL
		0.19	142	P 2	TWD	11	VH1	-0.91	TEC	TEH			33	HOT	600UL
138	88	0.37	135	P 2	TWD	19	VH1	-0.86	TEC	TEH			33	HOT	600UL
		0.27	152	P 2	TWD	15	VH1	-0.86	TEC	TEH			33	HOT	600UL
138	100	0.34	133	P 2	TWD	18	VH1	-0.90	TEC	TEH			33	HOT	600UL
		0.28	82	P 2	TWD	15	VH1	-0.90	TEC	TEH			33	HOT	600UL
138	102	0.41	85	P 2	TWD	17	VH1	-0.84	TEH	TEC	NEW		48	COLD	600UL
		0.37	146	P 2	TWD	16	VH2	-0.88	TEH	TEC	NEW		48	COLD	600UL
138	104	0.37	153	P 2	TWD	17	VH2	-0.80	TEH	TEC			50	COLD	600UL
		0.45	119	P 2	TWD	19	VH1	-0.73	TEH	TEC			50	COLD	600UL
		0.22	102	P 2	TWD	11	VH1	-0.19	TEH	TEC			50	COLD	600UL
		0.45	119	P 2	TWD	19	VH1	-0.73	TEH	TEC			50	COLD	600UL
		0.22	102	P 2	TWD	11	VH1	-0.19	TEH	TEC			50	COLD	600UL
		0.37	153	P 2	TWD	17	VH2	-0.80	TEH	TEC			50	COLD	600UL
138	108	0.24	151	P 2	TWD	12	VH2	-0.84	TEH	TEC			50	COLD	600UL
		0.24	150	P 2	TWD	12	VH2	-0.84	TEH	TEC			50	COLD	600UL
138	110	0.35	88	P 2	TWD	16	VH2	-0.82	TEH	TEC	NEW		50	COLD	600UL
139	85	0.36	126	P 2	TWD	15	VH3	+0.94	TEC	TEH			32	HOT	600UL
		0.34	82	P 2	TWD	13	VH3	+0.94	TEC	TEH			32	HOT	600UL
139	89	0.32	141	P 2	TWD	13	09H	+0.74	TEC	TEH			32	HOT	600UL
		0.19	51	P 2	TWD	8	09H	-0.90	TEC	TEH			32	HOT	600UL
		0.32	134	P 2	TWD	12	09H	+0.74	TEC	TEH			32	HOT	600UL
		0.19	51	P 2	TWD	8	09H	-0.90	TEC	TEH			32	HOT	600UL
139	95	0.28	54	P 2	TWD	12	VH1	-1.03	TEC	TEH			32	HOT	600UL
		0.28	65	P 2	TWD	11	VH1	-1.03	TEC	TEH			32	HOT	600UL
139	99	0.37	145	P 2	TWD	15	VH2	-0.84	TEC	TEH			32	HOT	600UL
		0.36	116	P 2	TWD	14	VH2	-0.84	TEC	TEH			32	HOT	600UL
140	64	0.44	70	P 2	TWD	21	DBH	-1.95	TEC	TEH			37	HOT	600UL
		0.44	70	P 2	TWD	21	DBH	-1.95	TEC	TEH			37	HOT	600UL
140	86	0.48	141	P 2	TWD	18	VH2	-0.88	TEC	TEH			32	HOT	600UL
		0.48	123	P 2	TWD	18	VH2	-0.88	TEC	TEH			32	HOT	600UL
140	88	0.44	157	P 2	TWD	17	VH1	-0.90	TEC	TEH			32	HOT	600UL
		0.48	139	P 2	TWD	18	VH1	-0.90	TEC	TEH			32	HOT	600UL
140	90	0.40	152	P 2	TWD	16	VH2	-0.82	TEC	TEH			32	HOT	600UL
		0.49	158	P 2	TWD	18	VH1	-0.86	TEC	TEH			32	HOT	600UL
		0.39	140	P 2	TWD	15	VH2	-0.82	TEC	TEH			32	HOT	600UL
		0.61	132	P 2	TWD	21	VH1	-0 86	TEC	TEH			32	HOT	600UL
140	94	0.46	130	P 2	TWD	22	VH1	-0.88	TEC	TEH			33	HOT	600UL
		0.40	145	P 2	TWD	20	VH1	-0.88	TEC	TEH			33	HOT	600UL
140	102	0.38	94	P 2	TWD	16	VH2	-0.88	TEH	TEC	NEW		48	COLD	600UL
140	112	0.48	60	P 2	TWD	20	DBC	-1.84	TEH	TEC			50	COLD	600UL
		0.39	95	P 2	TWD	17	VH1	-0.80	TEH	TEC			50	COLD	600UL
		0.31	120	P 2	TWD	15	04H	+0.82	TEH	TEC			50	COLD	600UL
		0.34	33	P 2	TWD	16	DBC	+1.97	TEH	TEC			50	COLD	600UL
		0.39	95	P 2	TWD	17	VH1	-0.80	TEH	TEC			50	COLD	600UL
		0.42	26	P 2	TWD	18	DBC	+1.97	TEH	TEC			50	COLD	600UL

MAI, MCI, MMI, MVI, SAI, SCI, SVI, 0-100% twd

QUERY: QueryM3

ROW	LINE	VOLTS	DEG	CHN	IND	%TW	LOCATION		EXT	EXT	UTIL 1	UTIL 2	CAL #	LEG	PROBE
		0.48	60	P 2	TWD	20	DBC	-1.84	TEH	TEC			50	COLD	600UL
		0.34	113	P 2	TWD	16	VH2	-0.75	TEH	TEC	NEW		50	COLD	600UL
141	67	0.27	152	P 2	TWD	14	VH1	-0.85	TEC	TEH			37	HOT	600UL
		0.18	44	P 2	TWD	10	DBC	-1.85	TEC	TEH	NEW		37	HOT	600UL
		0.30	65	P 2	TWD	16	VH1	-0.85	TEC	TEH			37	HOT	600UL
141	99	0.27	45	P 2	TWD	15	DBH	+1.39	TEC	TEH			33	HOT	600UL
		0.24	100	P 2	TWD	13	VH1	+0.80	TEC	TEH			33	HOT	600UL
		0.24	119	P 2	TWD	13	VH1	+0.80	TEC	TEH			33	HOT	600UL
		0.27	48	P 2	TWD	15	DBH	+1.39	TEC	TEH			33	HOT	600UL
142	66	1.30	63	P 2	TWD	39	DBH	+1.96	TEC	TEH			37	HOT	600UL
		0.73	62	P 2	TWD	29	DBH	-1 66	TEC	TEH			37	HOT	600UL
		0.39	115	P 2	TWD	20	DBC	+1.76	TEC	TEH	NEW		37	HOT	600UL
		1.54	56	P 2	TWD	36	DBH	+1.96	TEH	TEC			47	COLD	600UL
		0.72	71	P 2	TWD	24	DBH	-1.66	TEH	TEC			47	COLD	600UL
		0.27	62	P 2	TWD	11	DBC	+1.47	TEH	TEC	NEW		47	COLD	600UL
		0.72	53	P 2	TWD	29	DBH	-1.66	TEC	TEH			37	HOT	600UL
		1.29	54	P 2	TWD	39	DBH	+1.96	TEC	TEH			37	HOT	600UL
142	78	0.42	150	P 2	TWD	21	VH2	-0.93	TEC	TEH			33	HOT	600UL
		0.37	105	P 2	TWD	19	VH1	-0.81	TEC	TEH			33	HOT	600UL
		0.40	150	P 2	TWD	20	VH2	-0.93	TEC	TEH			33	HOT	600UL
		0.30	151	P 2	TWD	16	VH1	-0.81	TEC	TEH			33	HOT	600UL
142	84	0.29	111	P 2	TWD	15	VH2	-0.87	TEC	TEH			33	HOT	600UL
		0.22	154	P 2	TWD	13	VH2	-0.87	TEC	TEH			33	HOT	600UL
142	88	0.38	144	P 2	TWD	19	VH2	-0.84	TEC	TEH			33	HOT	600UL
		0.38	145	P 2	TWD	19	VH2	-0.84	TEC	TEH			33	HOT	600UL
142	100	0.55	123	P 2	TWD	25	VH2	-0.82	TEC	TEH			33	HOT	600UL
		0.53	128	P 2	TWD	24	VH2	-0.82	TEC	TEH			33	HOT	600UL
142	102	0.64	131	P 2	TWD	23	VH2	-0.82	TEH	TEC			48	COLD	600UL
		0.41	106	P 2	TWD	17	VH1	-0.86	TEH	TEC			48	COLD	600UL
		0.47	113	P 2	TWD	19	VH1	-0.86	TEH	TEC			48	COLD	600UL
		0.64	131	P 2	TWD	23	VH2	-0.82	TEH	TEC			48	COLD	600UL
143	95	0.32	26	P 2	TWD	13	DBH	-1.32	TEC	TEH	NEW		32	HOT	600UL
143	103	0.52	78	P 2	TWD	19	VH1	-0.74	TEH	TEC			49	COLD	600UL
		0.52	78	P 2	TWD	19	VH1	-0.74	TEH	TEC			49	COLD	600UL
144	70	0.46	87	P 2	TWD	22	VC1	+0.44	TEC	TEH			37	HOT	600UL
		0.46	58	P 2	TWD	22	VC1	+0.44	TEC	TEH			37	HOT	600UL
144	72	0.37	57	P 2	TWD	19	DBH	+2.06	TEC	TEH	NEW		37	HOT	600UL
		0.58	51	P 2	TWD	26	DBC	-1.75	TEC	TEH			37	HOT	600UL
		0.55	56	P 2	TWD	25	DBC	-1.75	TEC	TEH			37	HOT	600UL
144	74	0.48	84	P 2	TWD	23	VH1	-0.93	TEC	TEH			37	HOT	600UL
		0.53	56	P 2	TWD	24	DBH	+0.67	TEC	TEH			37	HOT	600UL
		0.43	148	P 2	TWD	21	VH1	-0.93	TEC	TEH			37	HOT	600UL
		0.49	60	P 2	TWD	23	DBH	+0.67	TEC	TEH			37	HOT	600UL
144	76	0.19	110	P 2	TWD	9	DBH	-1.98	TEC	TEH	NEW		36	HOT	600UL
144	78	0.51	119	P 2	TWD	19	DBH	-2.15	TEC	TEH			32	HOT	600UL
		0.52	117	P 2	TWD	19	DBH	-2.15	TEC	TEH			32	HOT	600UL
144	80	0.35	134	P 2	TWD	14	VH1	-0.84	TEC	TEH			32	HOT	600UL
		0.34	106	P 2	TWD	13	VH1	-0.84	TEC	TEH			32	HOT	600UL
		0.18	175	P 2	TWD	7	DBH	+1.52	TEC	TEH	NEW		32	HOT	600UL
144	82	0.40	112	P 2	TWD	15	VH2	-0.88	TEC	TEH			32	HOT	600UL
		0.40	112	P 2	TWD	15	VH2	-0.88	TEC	TEH			32	HOT	600UL
144	84	0.51	66	P 2	TWD	24	VH3	+0.73	TEC	TEH			33	HOT	600UL
		0.44	106	P 2	TWD	21	VH3	+0.73	TEC	TEH			33	HOT	600UL
144	90	0.52	153	P 2	TWD	19	VH2	-0.86	TEC	TEH			32	HOT	600UL
		0.52	145	P 2	TWD	19	VH2	-0.86	TEC	TEH			32	HOT	600UL

MAI, MCI, MMI, MVI, SAI, SCI, SVI, 0-100% twd

QUERY: QueryM3

ROW	LINE	VOLTS	DEG	CHN	IND	%TW	LOCATION		EXT	EXT	UTIL 1	UTIL 2	CAL #	LEG	PROBE
144	94	0.40	136	P 2	TWD	20	VH2	-0.90	TEC	TEH			33	HOT	600UL
		0.33	156	P 2	TWD	17	VH2	-0.90	TEC	TEH			33	HOT	600UL
		0.18	51	P 2	TWD	10	DBH	+1.43	TEC	TEH	NEW		33	HOT	600UL
144	96	0.68	139	P 2	TWD	28	VH2	-0.83	TEC	TEH			33	HOT	600UL
		0.66	104	P 2	TWD	28	DBC	+1.58	TEC	TEH			33	HOT	600UL
		0.28	90	P 2	TWD	15	VH2	+0.91	TEC	TEH			33	HOT	600UL
		0.67	104	P 2	TWD	28	DBC	+1.58	TEC	TEH			33	HOT	600UL
		0.28	90	P 2	TWD	15	VH2	+0.91	TEC	TEH			33	HOT	600UL
		0.66	134	P 2	TWD	28	VH2	-0.83	TEC	TEH			33	HOT	600UL
144	102	0.36	51	P 2	TWD	16	VH2	-0.91	TEH	TEC			48	COLD	600UL
		0.39	56	P 2	TWD	17	VH2	-0.91	TEH	TEC			48	COLD	600UL
144	106	0.53	84	P 2	TWD	22	DBH	-1.83	TEH	TEC			50	COLD	600UL
		0.22	103	P 2	TWD	11	DBC	-1.51	TEH	TEC			50	COLD	600UL
		0.53	84	P 2	TWD	22	DBH	-1.83	TEH	TEC			50	COLD	600UL
		0.22	103	P 2	TWD	11	DBC	-1.51	TEH	TEC			50	COLD	600UL
145	73	0.26	58	P 2	TWD	14	DBH	+1.49	TEC	TEH	NEW		37	HOT	600UL
145	79	0.18	95	P 2	TWD	10	DBH	-1.49	TEC	TEH	NEW		33	HOT	600UL
145	91	0.22	145	P 2	TWD	13	DBH	-1.40	TEC	TEH	NEW		33	HOT	600UL
145	101	0.29	20	P 2	TWD	16	DBC	+2.03	TEC	TEH	NEW		33	HOT	600UL
146	78	0.29	149	P 2	TWD	16	08H	+0.70	TEC	TEH			33	HOT	600UL
		0.52	89	P 6	TWD	25	DBH	+1.55	DBH	DBH	LAR		198	HOT	560FH
		0.19	132	P 2	TWD	11	DBH	-1.71	TEC	TEH	NEW		33	HOT	600UL
		0.29	149	P 2	TWD	16	08H	+0.70	TEC	TEH			33	HOT	600UL
		0.25	62	P 2	TWD	14	DBH	+1.53	TEC	TEH	NEW		33	HOT	600UL
146	82	0.68	100	P 2	TWD	28	DBH	+1.65	TEC	TEH	LOCOK		33	HOT	600UL
		0.68	100	P 2	TWD	28	DBH	+1.65	TEC	TEH			33	HOT	600UL
146	90	0.37	115	P 2	TWD	19	DBC	+1.44	TEC	TEH			33	HOT	600UL
		0.41	116	P 2	TWD	20	DBC	+1.44	TEC	TEH			33	HOT	600UL
146	92	0.27	73	P 2	TWD	15	DBH	+1.91	TEC	TEH			33	HOT	600UL
		0.39	126	P 2	TWD	20	VH2	-1.17	TEC	TEH			33	HOT	600UL
		0.39	128	P 2	TWD	20	VH2	-1.17	TEC	TEH			33	HOT	600UL
		0.30	66	P 2	TWD	16	DBH	+1.91	TEC	TEH			33	HOT	600UL
146	94	0.48	30	P 2	TWD	23	DBC	+1.99	TEC	TEH	NEW		33	HOT	600UL
146	96	1.07	57	P 2	TWD	36	DBC	+1.19	TEC	TEH			33	HOT	600UL
		0.80	24	P 2	TWD	28	DBC	+1.19	TEH	TEC			52	COLD	600UL
		1.01	71	P 2	TWD	35	DBC	+1.19	TEC	TEH			33	HOT	600UL

Total Tubes : 806
Total Records: 1869