Entergy

Entergy Operations, Inc.
1448 S R 333
Russellville, AR 72802
Tel 501 858 5000

0CAN020302

February 3, 2003

U. S. Nuclear Regulatory Commission
Attn; Document Control Desk
Washington, DC 20555-0001

Subject: Arkansas Nuclear One - Units 1 and 2
Docket No. 50-313; 50-368
License No. DPR-51; NPF-6
Inspection Report 50-313; 368/01-06
Significance Determination Process Technical Information

Dear Sir or Madam:

Inspection Report 50-313; 368/01-06, *Triennial Fire Inspection,* dated August 20, 2001, and subsequent Nuclear Regulatory Commission (NRC) correspondence dated April 15, 2002, determined that Arkansas Nuclear One (ANO) is in non-compliance with 10CFR50, Appendix R III.G.2. The non-compliance concerns the use of manual actions on ANO-1 to achieve safe-shutdown conditions should a fire occur in an area outside the control room. In the April 15, 2002, letter this item was reclassified as an Apparent Violation pending the NRC's assessment of the risk significance associated with the finding.

In a telephone conference between representatives of Entergy and NRC Region IV staff on January 15, 2003, Entergy determined that additional technical information should be provided to the NRC for consideration in the Significance Determination Process (SDP). Attachment 1 contains this technical information and we request it be considered prior to any final decision being made concerning the risk significance of the manual action issue.

This may not be the only additional technical information necessary to get a realistic characterization of the risk significance of this finding. Over the last year Entergy has attempted to engage the staff in discussions concerning the assumptions and models used to perform the assessment of risk. Additional information was provided where it was identified that the model assumptions did not accurately reflect conditions in the plant. To more effectively utilize both NRC and Entergy resources we encourage the NRC to provide Entergy the opportunity to review the Staff's risk evaluation and allow the inclusion of updated information as necessary.

A006
IE01

There are no new commitments identified in this submittal. Should you require additional information please contact Mr. Glenn Ashley at 479-858-4617.

Sincerely,

Sherrie R. Cotton

Sherrie R. Cotton
Director, Nuclear Safety Assurance

SRC/RMC
attachments

cc:

Mr. Ellis W. Merschoff
Regional Administrator
U. S. Nuclear Regulatory Commission
Region IV
611 Ryan Plaza Drive, Suite 400
Arlington, TX 76011-8064

NRC Senior Resident Inspector
Arkansas Nuclear One
P.O. Box 310
London, AR 72847

U.S. Nuclear Regulatory Commission
Attn: Mr. Tom Alexion
Washington, DC 20555-0001

U.S. Nuclear Regulatory Commission
Attn: Mr. William D. Reckley
Washington, DC 20555-0001

ATTACHMENT 1
FIRE SDP TECHNICAL INFORMATION

The following information is provided for input into the SDP associated with Inspection Report 50-313; 368/01-06.

1) Cable Data – the following table contains a list of cables with the applicable insulation type. The listed cables (with one exception) were determined to have thermoset insulation which has a failure temperature of 700 degrees F. The one exception is cable RCB5721D1 (component P64A) that was installed in the 1990's. The work package that recorded the cable reel number has not been located; however, the other listed instances of this cable type (i.e. R74) are thermoset cables; therefore, we believe that this cable also has thermoset insulation.

Equipment	Cable	Cable Type	Type
A308	RCA308G	R34	Thermoset
A3	RCD1104A	R12	Thermoset
	RCD1104B	R12	Thermoset
P36A	RCA306D	R34	Thermoset
B5	RCB512C	R54	Thermoset
P64A	RCB5721D1	R74	
	RCB5721D	R74	Thermoset
P64B	B801B1	714	Thermoset
	B801B	714	Thermoset
K4A	RCA11C	R34	Thermoset
	RCA11D	R34	Thermoset
	RCE11C	R54	Thermoset
CV2680	RCB5124F	R74	Thermoset
	RCB5124G	R54	Thermoset
CV2620	RCD1514D	R74	Thermoset
	RCD1514E	R54	Thermoset
CV2627	RCD1522D	R74	Thermoset
	RCD1522E	R54	Thermoset
CV2646	RJI423A1	R2S	Thermoset
CV2648	RJI423B1	R2S	Thermoset
CV2800	RCB5173E	R74	Thermoset
D15	RPD0121A1	R25	Thermoset
	RPD0121A2	R25	Thermoset
P7A (RS2)	GCY2200A	G12	Thermoset
	GCY2200B	G12	Thermoset
	GCD0242AA	G120	Thermoset
	GCD0242AB	G120	Thermoset

2) Cable Routing – For the cables listed in the above table, the associated raceways in Zone 99-M are listed below.

Equipment	Cable	Raceways in 99M		
A308	RCA308G	EC1175	EC1237	EC1236
A3	RCD1104A	EC1175	EC1190	EC1176
	RCD1104B	EC1175	EC1190	EC1176
P36A	RCA306D	EC1258	EC1190	EC1275
B5	RCB512C	EC1258	EC1237	EC1257
P64A	RCB5721D1	EC1088	EC1093	
	RCB5721D	EC1175	EC1163	
P64B	B801B1	EC1088	EC1093	
	B801B	EC1175	EC1165	EC1164
K4A	RCA11C	EC1175	EC1236	EC1237
	RCA11D	EC1175	EC1236	EC1237
	RCE11C	EC1258	EC1236	EC1237
CV2680	RCB5124F	EC1504		
	RCB5124G	EC1504		
CV2620	RCD1514D	EC1504		
	RCD1514E	EC1504		
CV2627	RCD1522D	EC1504		
	RCD1522E	EC1504		
CV2646	RJI423A1	EJ1004		
CV2648	RJI423B1	EJ1004		
CV2800	RCB5173E	EC1530		
D15	RPD0121A1	EC1589		
	RPD0121A2	EC1589		
P7A (RS2)	GCY2200A	EC2184		
	GCY2200B	EC2184		
	GCD0242AA	EC2212	EC2213	
	GCD0242AB	EC2212	EC2213	

3) Raceway Layout – This following sketch identifies the location of the raceways of interest in Zone 99-M.

Raceways Located in Zone 99-M

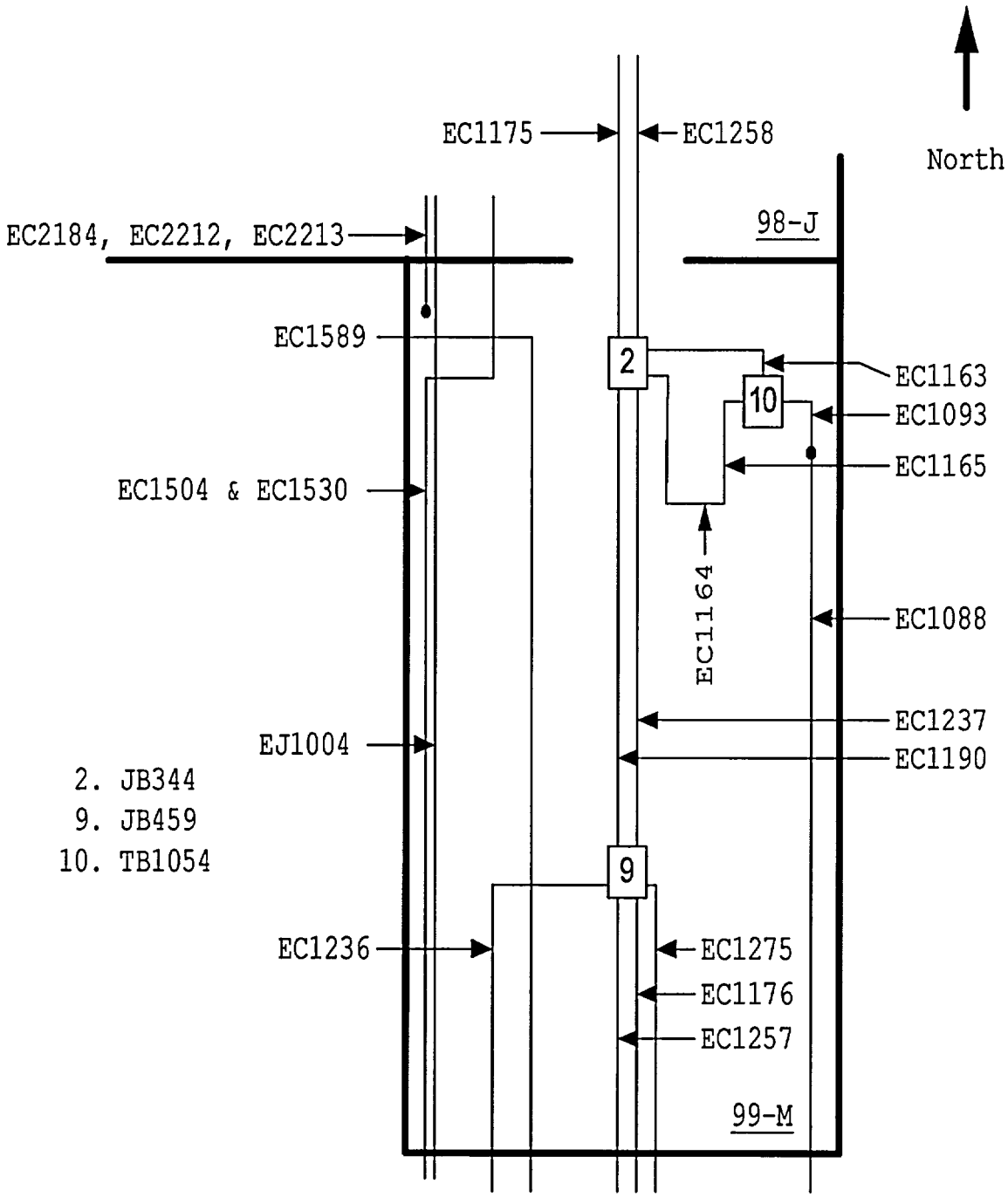

4) Ignition Sources – This sketch identifies the relative locations of the electrical cabinets located in Zone 99-M.

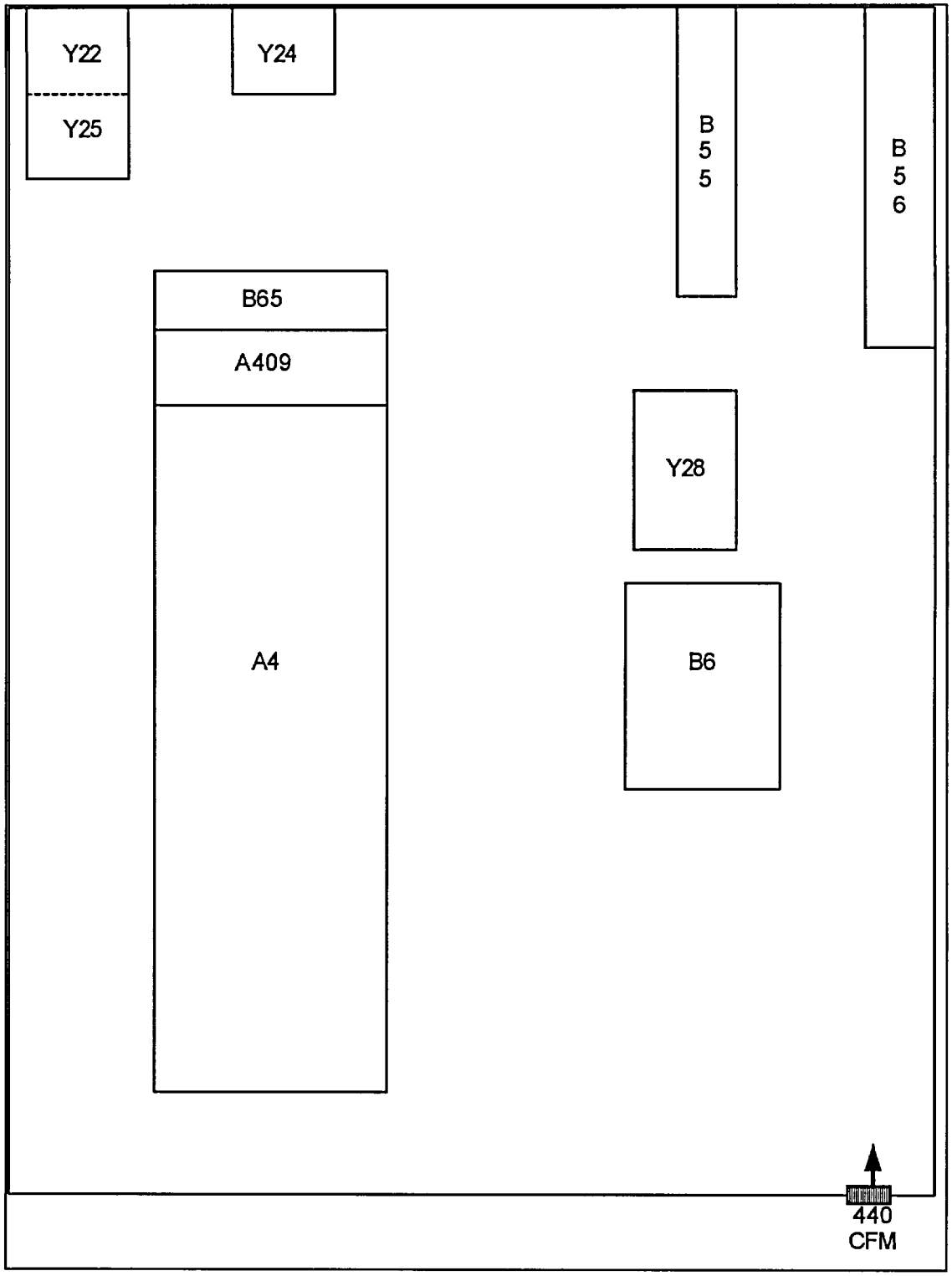

Items to Consider

Note: Focus has been placed on Zone 99-M (vs. 98-J) since there is no suppression system installed. Most of the listed cables are also routed through Zone 98-J. Similar consideration should be given to Zone 98-J.

1) During the teleconference on January 15, 2003, we determined that the current SDP fire models do not predict a hot gas layer reaching 700 degrees F in any of the modeled scenarios. Accordingly, all components will not 'fail' due to development of a hot gas layer. Instead, dependent on which ignition source is modeled, a certain set of components may incur damage (due to plume or ceiling jet effects) whereas others will not experience damage temperature due to the location of the circuits within the room. Without having run specific fire models, we would theorize the potential damage of circuits routed in raceways along the west wall of Zone 99-M (i.e. those associated with Emergency Feedwater [EFW]), whereas those routed in the eastern half of the room (i.e. associated with High Pressure Injection [HPI]) would not incur damage. Conversely, if the ignition sources are on the eastern half of the room, we would theorize damage to HPI related cabling, whereas EFW cabling in the western half of the room would not incur damage. With one success path undamaged by fire, the Human Reliability Analysis (HRA) values for performing any manual actions will be positively impacted.

2) For those components that do incur damage, there is a finite amount of time available prior to failure. Those closest to the ignition source would fail first, whereas those further away would fail sequentially as the fire progresses to the least severe exposure. Availability of the systems during this interval could have a significant impact on the amount of time available to perform manual actions. For example, assume the EFW valves do not fail closed for approximately 15 minutes. A considerable amount of decay heat can be removed by the EFW system during this 15 minute time span. This will positively impact the amount of time available to manually reestablish EFW and potentially impact the HRA values.

3) When preparing the IPEEE submittal, ANO assumed that the Main Feedwater System (MFW) would be unavailable in all fire scenarios. As a result, the PSA model built to support the IPEEE (and utilized for this SDP) assumed that a fire caused a loss of all MFW. In the process of evaluating this SDP, we have determined that one flow path of MFW will be available. Thus, the associated MFW pump will continue to operate until failures occur in the support systems (e.g. loss of cooling water for the lubrication system). Similar to Item 2 above, the availability of MFW to remove decay heat will impact the time available to perform recovery actions to restore EFW.

4) One of the conclusions of NUREG/CR-6776 *Cable Insulation Resistance Measurements Made During Fire Test* was that in the observed test cases, when a cable failure occurred, the failure ultimately resulted in the conductors shorting to ground. There are two flow paths from the motor driven EFW pump (i.e. P7B) to the steam generators. In order to lose a flow path (i.e. fail a valve closed), the controller for the solenoid valve (i.e. CV2646 or CV2648) must receive a spurious close signal. To fully close the valve, the close signal must be approximately 20mA (vs. a 4mA [or less] signal that results in a fully open valve). The valve position signal is provided by the Emergency Feedwater Initiation Control (EFIC) system and is normally a 4 mA signal (i.e. valve is normally open). With all

related related conductors ultimately failing to ground in a fire scenario, the prospect of maintaining a 20mA signal for an indefinite period of time is unlikely. The NUREG/CR notes that the duration of hot shorts (for thermoset cable) is limited to a matter of minutes after the onset of cable damage. Thus, while one (or both) flow path(s) from the EFW pump may be temporarily impacted by fire damage, ultimately the flow control valve will reopen and allow EFW flow to the steam generators.

These factors increase the availability of a method for removing decay heat, without requiring the performance of recovery manual actions during the initial stages of the fire event.