SCIENTIFIC ECOLOGY GROUP, INC.

P.O. BOX 2530
1560 BEAR CREEK ROAD
OAK RIDGE, TN 37831-2530

NUMBER

STD-R-02-014

TITLE

SAFETY ANALYSIS REPORT FOR THE 3-82B RADWASTE SHIPPING CASK

REV	DATE	PREPARED BY	CHECKED BY	QUALITY ASSURANCE	MANAGER	DCN
7	12/20/90	D.B. Ramey	Bry-Ry	F.L. Moody	Bry-Ry	90-107

9101040292 901227
PDR ADOCK 07106574
B PDR

TABLE OF CONTENTS

	Page
1.0 GENERAL INFORMATION	1-1
1.1 Introduction	1-1
1.2 Package Description	1-3
1.2.1 Packaging	1-3
1.2.2 Operational Features	1-11
1.2.3 Contents of Packaging	1-11
2.0 STRUCTURAL EVALUATION	2-1
2.1 Structural Design	2-1
2.1.1 Discussion	2-1
2.1.2 Design Criteria	2-1
2.2 Weights and Centers of Gravity	2-3
2.3 Mechanical Properties of Materials	2-3
2.4 General Standards for All Packages	2-4
2.4.1 Chemical and Galvanic Reactions	2-4
2.4.2 Positive Closures	2-4
2.4.3 Lifting Devices	2-5
2.4.4 Tiedown Devices	2-6
2.5 Standards for Type B and Large Quantity Packaging	2-7
2.5.1 Load Resistance	2-7
2.5.2 External Pressure	2-7
2.6 Normal Conditions of Transport	2-8
2.6.1 Heat	2-8
2.6.2 Cold	2-9
2.6.3 Pressure	2-9
2.6.4 Vibration	2-9
2.6.5 Water Spray	2-9
2.6.6 Free Drop	2-10
2.6.7 Corner Drop	2-10
2.6.8 Penetration	2-10
2.6.9 Compression	2-10
2.7 Hypothetical Accident Conditions	2-10
2.7.1 Free Drop	2-11
2.7.2 Puncture	2-11
2.7.3 Thermal	2-12
2.7.4 Water Immersion	2-12
2.8 Special Form	2-13
2.9 Fuel Rods	2-13
2.10 Structural Analysis	2-13

TABLE OF CONTENTS

		Page
3.0	THERMAL EVALUATION	3-1
3-1	Discussion	3-1
3.2	Summary of Thermal Properties of Materials	3-2
3.3	Technical Specifications of Components	3-2
3.4	Thermal Evaluation of Normal Conditions of Transport	3-2
3.4.1	Thermal Model	3-2
3.4.2	Maximum Temperatures	3-3
3.4.3	Minimum Temperatures	3-8
3.4.4	Maximum Internal Pressures	3-10
3.4.5	Maximum Thermal Stresses	3-10
3.4.6	Evaluation of Package Performance for Normal Conditions of Transport	3-10
3.5	Hypothetical Accident Thermal Evaluation	3-10
3.5.1	Thermal Model	3-10
3.5.2	Package Conditions and Environment	3-15
3.5.3	Package Temperatures	3-16
3.5.4	Maximum Internal Pressures	3-16
3.5.5	Maximum Thermal Stresses	3-16
3.5.6	Evaluation of Package Performance for the Hypothetical Accident Thermal Conditions	3-16
4.0	CONTAINMENT	4-1
4.1	Containment Boundary	4-1
4.1.1	Containment Vessel	4-1
4.1.2	Containment Penetrations	4-3
4.1.3	Seals and Welds	4-3
4.1.4	Closure	4-4
4.2	Requirements for Normal Conditions of Transport	4-11
4.2.1	Release of Radioactive Material	4-11
4.2.2	Pressurization of Containment Vessel	4-15
4.2.3	Coolant Contamination	4-16
4.2.4	Coolant Loss	4-16
4.3	Containment Requirements for the Hypothetical Accident Conditions	4-16
4.3.1	Fission Gas Products	4-16
4.3.2	Releases of Contents	4-16

TABLE OF CONTENTS

	Page
5.0 SHIELDING EVALUATION	5-1
5.1 Discussion and Results	5-1
5.2 Source Specification	5-1
5.2.1 Gamma Source	5-1
5.2.2 Neutron Source	5-5
5.3 Model Specification	5-6
5.3.1 Description of the Radial and Axial Shielding Configuration	5-6
5.3.2 Shield Regional Densities	5-6
5.4 Shielding Evaluation	5-6
5.5 Appendix	5-10
6.0 CRITICALITY EVALUATION	6-1
7.0 OPERATING PROCEDURES	7-1
7.1 Procedures for Loading the Package	7-1
7.2 Procedures for Unloading the Package	7-3
7.3 Preparation of an Empty Package for Transport	7-3
8.0 ACCEPTANCE TESTS AND MAINTENANCE PROGRAM	8-1
8.1 Acceptance Tests	8-1
8.2 Maintenance Program	8-1
8.2.1 Structural and Pressure Tests	8-1
8.2.2 Leak Tests	8-1
8.2.3 Subsystems Maintenance	8-2
8.2.4 Valves, Rupture Discs, and Gaskets on Containment Vessel	8-2
8.2.5 Shielding	8-2
8.2.6 Thermal	8-3

1.0 GENERAL INFORMATION

1.1 Introduction

This report documents the 3-82B radioactive material shipping packaging. The shielding, thermal and structural analyses of package performance for both normal operation and accident conditions are presented. The results of these analyses indicate compliance with the applicable requirements of 10CFR71.

The 3-82B packaging is for Type B material transport. It has been previously certified and has yielded safe and functionally satisfactory service on a virtually continuous basis since 1971.

The package consists of a steel-lead-steel annular cask with the form of a right circular cylinder and a lid closure at one end which can be manually opened and closed. The cask cavity is cylindrical, 54 inches in diameter and 64.4 inches in length. It can accommodate a sundry of contents and configurations provided the decay heat rate and maximum loaded weight limits are observed. In the case of process waste, an inner container will be used. For other waste, such as plant component parts and building materials, inner containers will not be used.

The total weight of the package is 50,000 pounds, and the unloaded weight is 41,805 pounds, giving an allowable weight of 8,195 pounds for the contents.

The 3-82B shipping cask, and the trailer upon which it is transported between waste pick-up and delivery sites is owned, operated and maintained by Scientific Ecology Group, Incorporated. The cask is used in providing transportation services for Type B quantities of radioactive material and activated components which SEG customers require.

Section 1.2.1 describes the design and functional aspects of the transportation packaging. It serves to define the physical nature of the packaging in terms of its various components and specifies the design parameters, such as materials and dimensions. Section 1.2.3 describes various considerations in regard to the package contents and the radionuclides which may be present.

Section 2.0 provides a summary of important performance criteria and presents the analytically predicted responses of the 3-82B transportation package design to specific events and conditions. This section provides an overview of the 3-82B package with respect to the 10CFR71 requirements for normal operating and accident conditions. A summary of the 10CFR71 requirements is presented at the beginning of this section. The stress calculations then follow in Section 2.10.

Section 3.0 provides a description of the thermal aspects of package performance for normal operating and accident conditions. Solar, nuclear decay reaction and fire accident heat loads are considered and the response in terms of temperature is determined in both space and time domains.

Section 4.0 describes the packaging containment for the normal conditions of transport and the hypothetical accident conditions.

Section 5.0 contains the shielding analysis of the 3-82B package which demonstrates the package safety conformance to the requirements set forth in 10CFR71.

Section 7.0 describes the essential elements of the operating or handling procedures for the 3-82B package. These elements are part of the actual operating procedures found in the SEG Rad Services Manual provided to cask users.

Section 8.0 contains a description of the maintenance program applicable to the 3-82B packaging. Listed in this section are the required tests and inspections that the packaging must undergo along with the test acceptance criteria.

1.2 Package Description

1.2.1 Packaging

The large capacity radioactive materials transport system is described in this section. The system is composed of the 3-82B shipping cask, its contents, and appurtenances, such as the devices used to secure the cask to the tiedown system. The system is intended to be used in roadway transport of Type B quantities of radioactive material.

1.2.1.1 Cask Weight and Example Load Configurations

Table 1.1 presents the weight of the 3-82B shipping cask in terms of its major components. The total cask weight is 41,805 pounds. This table also presents the weight of the contents for three example process waste configurations with disposable containers for the 3-82B system and the total weight of the packages which must not exceed 50,000 pounds. The table also gives the aggregate weight of the cask contents including wastes and internal structures for non-process waste, such as irradiated plant components and contaminated materials.

1.2.1.2 3-82B Shipping Cask

The shipping cask is a vessel which encapsulates the radioactive material and provides primary containment and isolation of the radioactive material from

Table 1.1 Sample Cask Contents
Weights by Configuration

3-82B Cask Unloaded	Weight (pounds)
Cask body	28,335
Cask lid	5,690
Shield plug	410
Closure bolts	50
Impact skirts	7,320
Total unloaded weight	41,805
Sample Load Configurations	
I. Process Waste	
A. Single Cylindrical Disposal Container*	
1. Cask	41,805
2. Canister	1,200
3. Waste	6,200
4. Battens, Pallets other Internals	0
TOTAL	49,205
B. Thirty Gallon Drum Disposable Containers	
1. Cask	41,805
2. Eight 30 gallon drums including waste	4,000
3. Battens, Pallets and other Internals	1,050
TOTAL	46,855
C. Fifty-Five Gallon Drum Disposable Containers	
1. Cask	41,805
2. Three fifty-five gallon drums including waste	3,000
3. Battens, Pallets and other Internals	750
TOTAL	45,555
II. Non Process Type B Waste	
1. Cask	41,805
2. Waste plus Battens, Pallets and other Internals in the Aggregate	8,195
TOTAL	50,000

*The maximum load per shipment using single disposal containers is 8,195 pounds. This consists of the canister, waste, solidification agent, battens, pallets, and other internals.

the atmosphere while being transported. The configuration of the cask is as described in the design drawings of Appendix A.

1.2.1.2.1 Cask Body

The cask is normally an upright circular cylinder composed of layers of structural steel with lead for radiation shielding intermediate of the steel sheets. The lamina are of 3/8 inch inner steel, 3-3/4 inch of lead shield and a 1 inch outer steel shell. The inner and outer steel shells are connected at the top by a steel flange. The cask is closed on the bottom end and the top has a large circular bolted access way or lid. The heavy steel flange connecting the annular steel shells at the top accepts the studs which attach the lid and provides a seat for a silicone gasket seal. This seal is used to provide positive atmospheric isolation when the lid is closed by torquing the 24 one inch studs which are equally spaced at 15° intervals on the 61.25 inch diameter circle.

The outer steel shell is surrounded by a one inch thick layer of Johns-Manville insulation which in turn, is covered by an 11 gauge steel sheet which has a thickness of .125 inch.

The cask bottom consists of steel plates welded to the inner and outer cask shells. The inner shell bottom is 2.0 inches thick and the outer shell bottom is 1.0 inch thick. The intermediate lead shielding thickness is 2.38 inches.

The inner steel shell is designed to act as a pressure vessel when the cask lid is bolted to the cask body. This shell has been designed to withstand an internal pressure of 400 psi. The weld configurations which form the shell wall and bottom have been designed to withstand a bend on impact of 135° (as per Reference 1-1, pages 23 - 25). The stepped flanged surface, at the end of the cask body, has been constructed entirely of steel. The stepping of the flange

has been designed to minimize effects of radiation streaming and problems associated with gasket damage during impact. Three steel lifting devices equally spaced at 120° on a 64 1/4 inch circle have been welded to the upper portion of the cask body. These lifting devices have been designed to be capable of lifting three times the total gross weight of the loaded cask.

1.2.1.2.2 Cask Lid

The main segment of the cask lid is fabricated in the form of a steel-lead-steel disc mounted within and welded to two solid steel stiffening rings at the outer and inner edges. The outer steel disc of 1.0 inch thickness has 36 radially directed steel reinforcing bars of 1.0 inch by 3.5 inch cross section welded to it and to the steel stiffening rings. The steel outer ring is stepped and the surfaces machined to form mating surfaces which include a silicone gasket seal between the lid and the cask body. The steel reinforcing bars and the outer plate region between the steel bars is filled with a layer of Johns-Manville insulation. The insulation is capped by a 304 stainless steel sheet of 11 gauge except for three lid lifting eyes which are welded to the reinforcing bars and protrude through the insulation cap sheet. These eyes are equally spaced circumferentially and are on a 47.8 inch diameter circle.

1.2.1.2.3 Shield Plug

The shield plug is located in the center of the cask lid, and is composed of an inner steel shell of 1.5 inch thickness and an outer steel shell of 1.0 inch thickness with an intermediate shielding layer of lead 2.5 inches in thickness. The shield plug is bolted to the outer portion of the cask lid with 16 equally

spaced 1/2 inch studs on a 20.5 inch diameter circle. The shield plug is sealed to the main outer portion of the cask lid with a silicone gasket seal which is retained by the tensile loading on the studs. The mating flange is stepped in a manner similar to that described in the previous section for the cask lid. The shield plug has a lifting eye at the center and it is capable of lifting three times the weight of the shield plug. The purpose of the shield plug is to allow access to containers within the cask with the cask lid in place for shielding.

1.2.1.2.4 Cask Closure

Sealing of the cask is accomplished at both the:

a) bolted joint between the cask body and the cask lid and

b) the bolted joint between the cask lid and the shield plug.

These joints are sealed by circumferential silicone gasket seals loaded in compression by the bolt tension.

1.2.1.2.5 Impact Skirt

Impact protection for the cask is provided by two removable annular impact skirts which protect the cask ends and sides. Both the upper and lower impact skirts are secured to the cask body at three equally spaced circumferential locations using turnbuckles. Radially the impact skirts extend 15.0 inches beyond the cask wall. At the top and bottom end impact protection is provided by an annulus of foam approximately 27.00 inches wide and nominally 18 inches thick. Side impact protection is provided at the top and bottom by an annulus of foam approximately 20.5 inches in axial extent and nominally 71.0 inches in radial

extent. The foam is a high density rigid polyurethane foam designated as LAST-A-FOAM FR-3718.25, manufactured by General Plastics Manufacturing Company, that will possess a density of approximately 18.25 lb/ft^3. It is canned with 12 gauge and 3/16" ASTM A304 stainless steel.

1.2.1.2.6 Fabrication Materials

The shipping cask has been fabricated from materials that conform to the following specifications:

Material	Specification of Class
Steel plate	A516, grade 55
Lead	ASTM B-29 Chemical grade
Steel forgings	A350-LF 1
Insulation	Cerafelt-600, Johns-Manville
Shock absorber	General Plastics, Last-A-Foam FR-3718.25 with a density of approximately 18.25 lb/ft^3
Bolts	ASTM A320 Grade L7, L10, L43 ASTM A354 Grade BD
Gaskets	Silicone Gasket

1.2.1.2.7 Tiedown Devices

The cask sits with its axis of symmetry in the vertical direction when being transported on the truck trailer bed. Tiedown consists of two sets of two crossed tiedown cables. The crossing of the tiedown cables, used to connect the cask to the trailer, provides a uniform and larger range of elastic restraint for the

cask in the regard to translation and rotation with respect to the cask's principal axes than would be obtained from cables without a circumferential component.

The cask is restrained against translation at its base by a shear ring.

1.2.1.3 Cask Internals

The internals of the 3-82B shipping cask can be any one of an extensive variety of configurations. Some examples have previously been given in terms of weight in Table 1.1. Other arrangements are possible, providing the gross weight and the decay heat rate limits are observed, and the material secured against movement relative to the cask with an internal structural members such as battens and pallets. Basically, the internals consist of the waste, containers if process waste is being transported, and the structures used to fix the waste relative to the cask.

Waste forms are of two principal types. First the process waste, including such items as filters and sludge from power reactor operation, will be placed in single or multiple-closed disposable containers. The second waste form is simply designated as non-process waste and includes those irradiated and radionuclide-contaminated solid substances such as plant component parts and building materials. These substances will be transported in the cask cavity after being secured against relative motion. A framework of wooden battens is used to position the waste inside the cask to allow a more nearly symmetrical load configuration. This allows a more uniform heat transfer condition to be established, and prevents both relative motion between the contents and the cask, and undesirable secondary impacts should an initial impact occur. Figure 1.1 shows how the wooden battens might be used to position an inner container of small diameter

Figure 1.1. Wooden Positioning Web

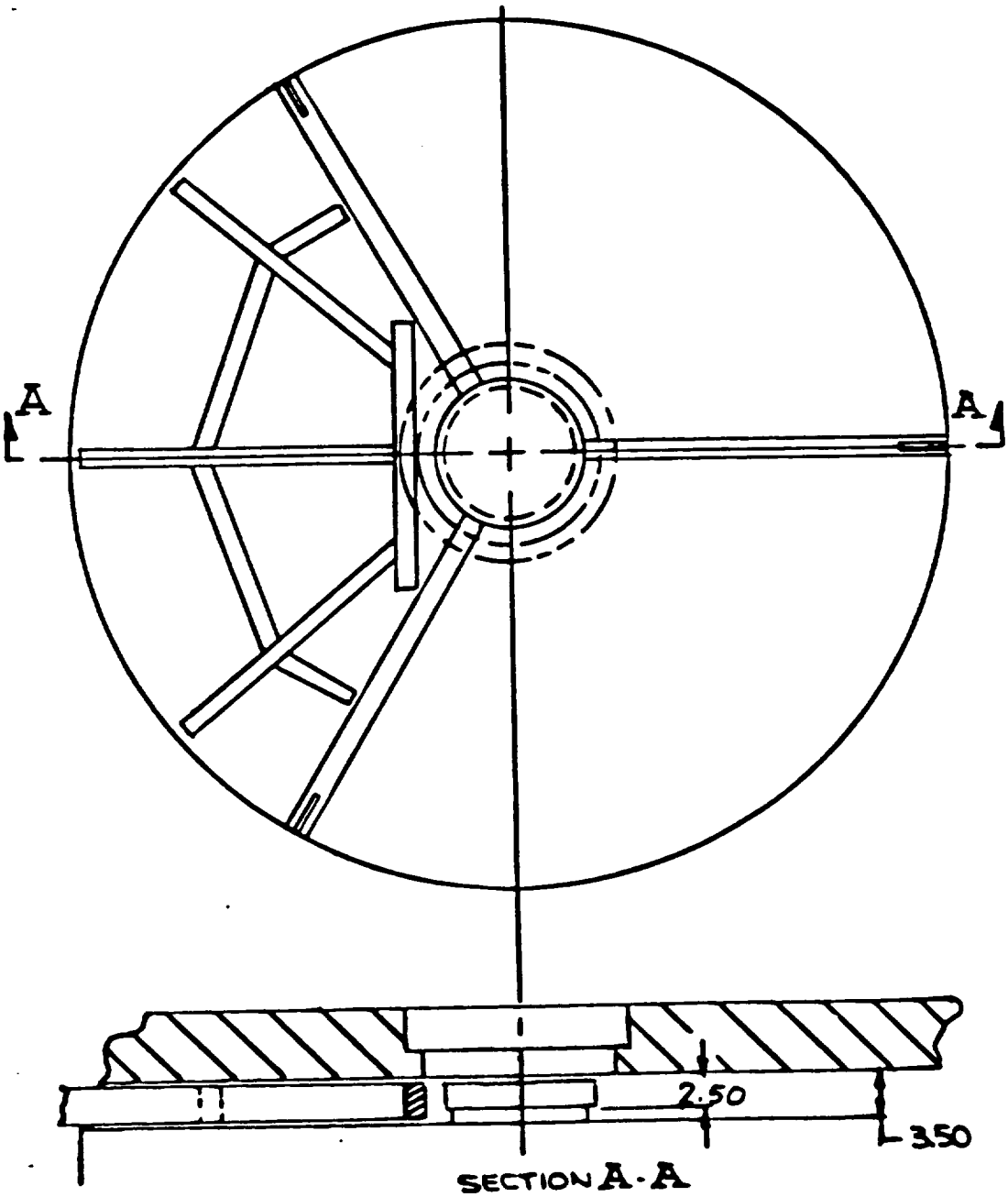

during transport. SEG has designed, constructed and used several wooden pallet configurations to position various numbers of drums of various sizes.

1.2.2 Operational Features

The 3-82B is not a complex packaging system. Operational features are straightforward and are discussed in Section 7.0 as well as elsewhere.

1.2.3 Contents of Packaging

The contents of the packaging will consist of:

a) process solids produced as radioactive waste during the operation of nuclear power plants

b) irradiated and surface-contaminated hardware components, or segments of components of a nuclear facility, such as reactor vessel internals, steam generator, piping or coolant pump segments, etc.

These contents are limited to the extent that they must meet the specific activity limits for radioactive Type B quantities of radioactive material, the shielding capabilities of the packaging and the entire transportation package to be in compliance with the decay heat limit and the system total weight limit (50,000 pounds).

The waste material may take any one or more of a wide variety of physical forms. Examples are spent ion exchange resins, filter sludges or other concentrates, metals, plastics, soils, building materials and other physical substances.

Some pertinent characteristics which the packaging contents may possess are described below.

1.2.3.1 Typical Process Waste Forms

The chemical and physical form of the process solids will vary with the source of the waste material. However, individual shipments may contain one or more of the following types of materials.

1.2.3.1.1 PWR Spent Resins

PWR's use bead type ion exchange resins. These bead type resins are chemically inert and have an average particle size of 50 mesh (0.297 mm) and a maximum particle size of 16 mesh (1.19 mm). When spent, these resins contain trace quantities of activated corrosion and fission products.

1.2.3.1.2 BWR Spent Resins

BWR's use either bead type resins as described above or powdered resins. Powdered resins are chemically inert and have an average particle size of 325 mesh (0.05 mm). When spent, BWR resins will contain activated corrosion and fission products.

1.2.3.1.3 Filter Sludges

BWR's use diatomacious earth, solka floc, ion exchange resins or other filtering media. These materials are chemically inert with particle size comparable to spent powdered resins. These filter sludges will contain trace quantities of activated corrosion and fission products.

1.2.3.1.4 Evaporator Concentrates

When plants use evaporators, the evaporator concentrates are solidified to form a process solid waste. These concentrates consist of dissolved and suspended matter removed from the coolant and purification systems such as corrosion and fission products.

1.2.3.1.5 Spent Filter Cartridges

Both PWR's and BWR's use expendable filter cartridges. These cartridges will contain activated corrosion product particulate matter when spent.

Each of the types of process solids described above will be dewatered by mechanical means or solidified as part of processing. Inert absorber material, such as Portlant Cement or other solidification agents will be mixed with the contents, as required.

1.2.3.2 Non Process Material

As mentioned earlier, the materials other than plant process substances such as irradiated hardware or contaminated materials, may be shipped so long as they are physically in the solid state and meet the specific activity limits for Type B and Large Quantity shipments. These materials will be transported in the 3-82B cask after being structually secured. Disposable containers may not be used.

1.2.3.3 Identification and Radioactivity of the Contents

The package contents will generally be composed of activated corrosion products. Specific nuclides may include:

Chromium	Cr-51
Cobalt	Co-58 Co-58m Co-60
Copper	Cu-64
Iron	Fe-55 Fe-59

Manganese	Mn-52 Mn-54 Mn-56
Molybdenum	Mo-99
Nickel	Ni-56 Ni-59 Ni-63 Ni-65
Silver	Ag-105 Ag-110m Ag-111
Tantalum	Ta-182
Tin	Sn-113 Sn-117m Sn-121 Sn-125
Tungsten	W-181 W-185 W-187
Zinc	Zn-65 Zn-69m Zn-69
Zirconium	Zr-93 Zr-95 Zr-97

All of these nuclides are classified as either Transport Group III or Transport Group IV. In addition, some power plant waste will contain Strontium-90 (Group II) and other fission products. These may require handling as Type B Large Quantity shipments.

Experience to date has indicated that the predominant nuclides present in process solid wastes are Co-58 and Co-60, with Co-58 predominating. Maximum curie content for each type of shipment of process solid wastes can be determined from Figures 5.8, 5.9, and 5.10. These constraints are based on the shield design presented in Section 5.0.

1.2.3.4 Maximum Weights

Without any irradiated waste material, the cask and its appurtenances weigh 41,805 pounds. The maximum gross weight of the system is 50,000 pounds. Thus, the payload of irradiated material, any canisters, such as drums being used, plus the battens, pallets, and positioning webs used to constrain the waste relative to the cask, can weigh 8,195 lbs. in the aggregate.

1.2.3.5 Decay Heat Limit

The decay heat load is much smaller than the solar heat load but the waste contents can have specific activities and a volume to an extent that the total cask contents decay heat is as high as 205 Btu/hr without incurring any temperature related problems.

References

1-1 Shappert, L.B. Cask Designers Guide, ORNL-NSIC-68, February 1970.

2.0 STRUCTURAL EVALUATION

2.1 Structural Design

2.1.1 Discussion

The principal structural components of the 3-82B transportation packaging include the steel-lead-steel cask body, the primary and secondary lid combination, the primary and secondary lid closure nuts and studs, the upper and lower impact limiters and the cask tie down system.

2.1.2 Design Criteria

The 3-82B transportation cask was designed to specifically meet the requirements of 10CFR71 Subpart E as applicable to Type B packages.

The criteria used to evaluate the applied stresses are described below. These criteria are applied to verify containment or primary load equilibrium.

Brittle fracture is prevented through the use of ASTM A516-Grade 55 carbon steel which is made to a "fine-grain practice" and exhibits a low Nil-Ductility Temperature.

2.1.2.1 Normal Stress

Stresses due to tension, bending or combined tension and bending are limited to the minimum yield strength of the material. The safety factor is equal to the yield stress divided by the applied stress. The minimum acceptable safety factor is 1.0.

2.1.2.2 Shear Stress

The limit in pure shear is based on the maximum distortion energy theory. The limit is $1/\sqrt{3}$ or .577 of the minimum yield strength of the material. The safety factor is .577 x yield stress divided by the applied shear stress, and the minimum acceptable safety factor is 1.0.

2.1.2.3 Bearing Stress

The bearing stress is limited to the minimum yield strength of the material.

2.1.2.4 Welds

The permissible weld stresses are based on page 5-21 of the Seventh Edition of the AISC Manual of Steel Construction. Tension, compression and shear allowables for full penetration welds are the same as those for the base metal. The lowest limit listed for shear or tension on the effective throat area of a partial penetration fillet weld, 18000 psi, is conservatively applied to the package fillet welds. The safety factor is 18000 psi divided by the applied stress, and the minimum acceptable safety factor is 1.0.

2.1.2.5 Contact

During impact, local yielding is permissible and the only limits are: (1) the ductility of the material or (2) material flow resulting in geometrical changes that produce unacceptable loss of shielding or breach of containment.

2.2 Weights and Center of Gravity

The total weight of the package is 50,000 lbs., the unloaded weight is 41,805 lbs, giving an allowable weight of 8,195 lbs for the contents. The weights of the major cask components can be found in Table 1.1. The center of gravity of the 3-82B package is located approximately at the geometric center of the package.

2.3 Mechanical Properties of the Materials

The following material properties used in the package analysis are as follows:

Primary Lid Studs and Nuts - ASTM A354 Grade BD

Min. Yield Strength - 125,000 psi

Secondary Lid Studs and Nuts - ASTM 320 GR L7 or L43

Min. Yield Strength - 105,000 psi

3-82B Steel Shell - ASTM-A516 Grade 55

Min. Yield Strength - 30,000 psi

Lead Shielding Material - ASTM B29

Dynamic Flow Stress = 5,000 psi

Modulus of Elasticity = 2×10^6 psi

Energy Absorbing Foam - General Plastics LAST-A-FOAM FR-3718.25 that shall possess a density of approximately 18.25 lb/ft^3 and fall within the boundary of the stress vs. strain curves described in Figure 2.10.15. The curves shown in this figure represent the median, maximum, and minimum compressive properties of the foam. A 95% probability factor was applied to the standard deviation to establish the spread shown.

The 3-82B Impact Skirt Foam Specification (SEG Document No. STD-S-02-007) defines the detailed foaming test procedure. It specifies that foam samples will be taken during the actual foaming process and tested to verify that they are within the maximum and minimum curves.

2.4 General Standards for All Packages

2.4.1 Chemical and Galvanic Reactions

In the case of process waste, the material will be encapsulated in disposable steel containers which are placed within the shipping cask.

The other solid material waste form will include substances such as irradiated nuclear power component parts and contaminated materials. The external surfaces of these waste forms will be in a dewatered condition and virtually inert with respect to chemical, electro chemical or galvanic reaction.

No significant physical deterioriation of the inner liner or other components of the cask is expected to occur. Also, the materials will be relatively free from significant internal reaction.

Galvanic or chemical reaction between:

a) the packaged process waste and the shipping cask and

b) the other solid non-process waste and the shipping cask and

c) between one element of waste and another are not expected to have significant effects on the package.

2.4.2 Positive Closure

The shipping cask has absolute positive closure provided at the shield plug by 16 threaded studs and a silicone gasket seal. At the cask lid, the closure

is also positive in that 24 threaded studs preload the cask lid to the cask body with atmospheric isolation provided by a circular silicone gasket seal. Inadvertent opening is thus prevented, in that access can result only from an extensive series of very deliberate procedures. The process waste, which for example may contain radioactive waste material, in particulate form adhering to the surfaces of a filter, is enclosed in drums or other disposable containers. The drums have lid gaskets, lids and closure rings and the other larger disposable containers are also sealed with a container cap before being transported.

2.4.3 Lifting Devices

2.4.3.1 Shipping Cask

Three equally spaced lifting lugs are welded to the upper steel flange and the outer steel shell of the cask body.

A special cask lifting frame is utilized to engage the three cask lifting lugs. This frame ensures that only vertical loads are sustained by the cask lifting lugs when the lifting frame is lifted by a crane.

The lifting frame will support in excess of three times the maximum weight of the loaded cask (50,000 pounds) including all appurtanances with a minimum safety margin of 1.05 (see Section 2.10.3).

2.4.3.2 Cask Lid

The lifting system for the cask lid consists of three circumferential lifting lugs equally spaced and welded to three of the head stiffener bars. These lugs will support three times the weight of the cask lid (6,100 pounds including the shield plug) with a safety margin of 1.86 (see Section 2.10.4).

2.4.3.3 Shield Plug

The lifting system for the shield plug consists of a single clevis pin type shackle assembly attached to a lifting eye which is welded to the center of the outer steel plate of the shield plug. This lifting system will support three times the weight of the shield plug (410 lb) with a minimum safety margin of 1.23 (see Section 2.10.4).

2.4.3.4 Non-Lifting Attachments Covered or Locked

Both the cask lid lugs and the shield plug lifting system will be locked to prevent their being used to lift the shipping cask.

2.4.3.5 Lifting Device Failure

All lifting devices are designed such that excessive loads will result in failure at the weld joints (see Section 2.10.3). This characteristic is included to further diminish the likelihood of occurrences which would damage the primary cask components and impair its shielding or containment integrity.

2.4.4 Tiedown Devices

2.4.4.1 Tiedown Forces

The actual tiedown devices consist of four identical lengths of cable which are secured to the trailer body and the cask. Additionally, a shear ring firmly engages and holds the cask bottom relative to the trailer bed. The attachments to the cask have been designed to withstand a vertical force of 2 g's, a transverse force of 5'gs, and a longitudinal force of 10 g's. For the purpose of

analyzing the attachments to the cask, tiedown lugs have been assumed to have a working load of 250,000 pounds.

2.4.4.2 Non-Tiedown Devices Covered or Locked

The four tiedown lugs located on the cask periphery are locked when not utilized with the tiedown cables. This prevents them from being used as lifting devices.

2.4.4.3 Tiedown Device Failure

The four tiedown lugs on the cask periphery have been designed so that loads transmitted by the tiedown cables under worst conditions will neither damage the outer steel shell nor cause the tiedown lugs to fail (Section 2.10.5).

2.5 Standards for Type B and Large Quantity Packaging

2.5.1 Load Resistance

The cask is designed to withstand a static load equal to five (5) times the total loaded cask weight applied uniformly along either of two orthagonal axes which in turn are orthoginal to the cask major axis (or axis of symmetry). For this load condition, the cask is considered to be a beam simply supported at both ends. The cask is evaluated in regard to this structural standard in Section 2.10.1. The cask is capable of withstanding this load with a safety factor of 21.

2.5.2 External Pressure

The 3-82B cask can safely withstand an external pressure well in excess of 25 psig and will suffer no loss of or damage to the contents under this external pressure.

The stress in the outer steel shell is 802 psi, this yields a safety factor of 37.4 for this external pressure loading (see Section 2.10.2). The critical buckling pressure based on elastic stability analysis methods for the cask outer steel shell is 250 psi, which indicates a factor of safety of 10 (section 2.10.2) exists for this load case. These analyses do not take credit for the stability provided by the inner steel shell and the lead shielding.

2.6 Normal Conditions of Transport

The cask has been designed to withstand events and conditions during normal transport service. The design integrity has been analyzed using analytical techniques and verified with a safety factor in excess of 1.0 for each load condition. The normal conditions of transport are as specified in Appendix A of 10CFR71. Sections 2.0, 3.0 and 5.0 of this report delineate the ability of the 3-82B package to meet the following independently applied conditions.

2.6.1 Heat

The cask in direct sunlight at an ambient temperature of 130°F will not experience a surface temperature greater than 163°F or a waste material temperature greater than 188°F (see Section 3.4.2). Hence, the cask outer surface temperature is always less than 180°F and any moisture entrained within the essentially dewatered waste material will not change phase to become steam and pressurize the cask. The stresses resulting from any differential thermal expansion are negligable.

2.6.2 Cold

Suitable materials for steel forgings, plates, and bolting material have been chosen for cask construction to assure that the cask is structurally adequate at -40°F (Section 2.2). Additionally, there is ample void space within the cask to allow for the expansion of water upon freezing, should moisture be present in the waste.

2.6.3 Pressure

The cask can withstand an internal vacuum of 7.35 psig (Section 3.4.4). The associated stress on the inner steel shell is 528 psi, which results in a factor of safety of 57.

2.6.4 Vibration

The cask tie-down devices and shear ring elastically constrain the package and their stiffness is adequate to eliminate translational and rotational motion of large amplitude and control vibration effects. Additionally, all cask external devices are firmly attached (either by welding or bolting) to the cask.

The impact skirts are able to support vibrational loads well in excess of the requirements of 49CFR393.102.

2.6.5 Water Spray

The cask is sealed by silicone gasket seals as well as bolted to assure that it is watertight. The seals are adequate to prevent the admission of water due to surface tension and other forcing effects.

2.6.6 Free Drop

The cask is structurally adequate to withstand a one foot drop, striking any cask surface, onto a flat horizontal unyielding surface. The analyses presented in Section 2.10.6 show the ability of the cask to successfully withstand a 30 foot drop under this condition.

2.6.7 Corner Drop

Not applicable since package weight greatly exceeds 110 pounds and wood or fiberboard construction is not used.

2.6.8 Penetration

The impact of a vertical steel 1-1/4 inch diameter, 13 pound cylinder from a height of four (4) feet will not puncture the cask outer steel shell (Section 2.10.8). Additionally, there is no externally mounted equipment on the cask whose damage due to this transport condition would limit the cask structural adequacy or hinder its function.

2.6.9 Compression

Not applicable since cask weight is in excess of 10,000 pounds.

2.7 Hypothetical Accident Conditions

The cask has been designed and analytical inquiry made regarding the ability of the cask to withstand the hypothetical accident sequence given in Appendix B of 10CFR71. Specifically, these criteria and the results are as follows:

2.7.1 Free Drop

The cask is capable of withstanding a free drop of 30 feet onto any surface without disturbing the lid or shield plug closure and without resulting in damage to the cask inner or outer shells. The entire analysis of this accident is presented in Section 2.10.6. The top and bottom portion of the cask contain massive, high density urethane foam impact shirts which deform and absorb the energy of impact from the 30 foot drop. The energy absorbed in the crushing of these skirts is sufficient to prevent any physical damage to the steel shell or cask closures from occurring. The actual volume of foam in the skirt is sufficient to assure that the crushed foam height after impact is less than the total usable foam thickness. The effect of the inertial loads due to the various types of drops are examined. The four types of drops examined are:

a) Corner Drop - Top and bottom corners at the angle causing most severe damage - Section 2.10.6.1

b) End Drops - Top and Bottom - Section 2.10.6.2.

c) Side Drop - Section 2.10.6.3

2.7.2 Puncture

The cask has been analytically verified to be capable of withstanding a 40 inch drop onto a six inch diameter unyielding cylindrical steel mandrel (Section 2.10.7). The thickness of the entire outer steel shell is a minimum of one (1) inch thick. The data presented in Reference 2-1 show that this steel thickness is adequate to prevent puncture of the shell with a safety factor of 1.10.

2.7.3 Thermal

After completion of the free drop and puncture hypothetical accident analyses, analyses were made which verified the ability of the cask to withstand the hypothetical fire accident (Section 3.5.1). The fire accident assumes exposure to a 1475°F fire for 30 minutes. Cask emissivity and absorptivity coefficients of 0.9 and 0.8 were assumed for the cask surface. The complete analysis was made using a three dimensional transient computer program, TAP. The total time period examined was three hours after the fire initiated.

The one inch thick canned insulation surrounding the cask outer surface limits the maximum cask metal temperature to 230°F and the waste internal temperature of 193°F. This prevents the lead shielding from melting and expanding and eliminates the possibility of water vapor forming and pressurizing the cask from the inside. The silicone seals are designed to allow sealing of a surface at temperatures in excess of 650°F. Hence, the cask closure would not be violated during the accident and there would be no release of radioactive material.

2.7.4 Water Immersion

The 3-82B cask has, at the conclusion of the free drop, puncture, and thermal accidents, adequate structural integrity to withstand an immersion in three feet of water for 24 hours without releasing the cask contents. The seals and closures have previously been shown to be adequate to withstand the other tests without causing permanent deformation of the containment boundary. Hence, there will be no leakage through the lid or shield plug closure or past the silicone seals. Additionally, there will be no breach of the steel outer shell. As an added precaution, for the transport of process waste, the inner containers are constrained and sealed and will provide partial containment following the hypothetical accident.

2.8 Special Form

Not Applicable

2.9 Fuel Rods

Not Applicable

2.10 Structural Analyses

This chapter discusses the various analyses used to investigate the structural adequacy of the 3-82B cask and shipping package under both expected and hypothetical accident conditions. The results of these structural analyses are judged against the requirements of 10CFR71 to determine design adequacy. The analyses were made using the best available data on material properties and conservative assumptions. This tends to assure that the element being analyzed will not experience higher stresses during its service life than the analytically predicted values.

The following list contains the applicable structural loads covered in the structural analysis, the applicable section of this chapter, and the applicable section of 10CFR71.

Section

- 2.10.1 The cask regarded as a simple beam supported at its ends along any major axis, packaging shall be capable of withstanding a static load, normal to and uniformly distributed

along its length, equal to five (5) times its fully loaded weight without generating stresses in any material in excess of its yield strength.

- 2.10.2 (1) Packaging shall be adequate to assure that the containment vessel will suffer no loss of contents if subjected to an external pressure of 25 psig or;

  (2) An internal pressure of 7.5 psia.

- 2.10.3 The shipping cask lifting device is designed to support three (3) times the weight of the loaded package without exceeding the yield stress of the material at any point.

- 2.10.4 The lid lifting and shield plug devices are designed to support three (3) times the weight of the lid without exceeding the yield stress of the material at any point.

- 2.10.5 The tiedown attachments on the package are designed to be capable of withstanding static force, at the center of gravity of the package, having a vertical component of two (2) times the weight of the package a horizontal component (along the direction in which the vehicle travels) of ten (10) times the weight of the package, and a horizontal component in the transverse direction of (5) times the weight of the package.

- 2.10.6 A free drop through a distance of 30 feet onto a flat, unyielding, horizontal surface and striking the surface in a position for which the maximum damage is expected.

- 2.10.7 A free drop through a distance of 40 inches striking, in a position for which maximum damage is expected, the top end of

a vertical cylindrical mild steel bar mounted on an unyielding, horizontal surface. The bar shall be 6 inches in diameter, with the top horizontal and its edge rounded to a radius of not more than one-quarter (1/4) inches, and of such length as to cause maximum damage to the package, but not less than 8 inches in length. The long axis of the bar shall be perpendicular to the unyielding horizontal surface.

o 2.10.8 Impact of a flat circular end of a vertical steel cylinder 1-1/4 inch in diameter, weighing 13 pounds, dropped from a height of four (4) feet normally onto the exposed surface of the package which is expected to be most vulnerable to puncture.

A safety factor is used throughout the structural analyses. A safety factor value of less than 1.00 is unacceptable. The safety factor (SF) is defined as follows:

$$SF = \frac{\text{allowable (load, stress, etc.)}}{\text{calculated (load, stress, etc.)}}$$

The following general nomenclature was used:

I = moment of inertia, in^4

E = modulus of elasticity, ksi

σ = stress, psi

P = pressure, psi

t = thickness, in.

R = radius, in.

W = weight, lb.

Z = section modulus, in^3

KE = kinetic energy, in-lb

V = volume, in^3

U = crushing strength, psi

U' = energy capacity per unit volume, $in\text{-}lb/in^3$

It is noted that the safety factors are in addition to allowances specified in 40CFR71.

2.10.1 Structural Load Standard

The cask when considered as a simply supported beam (Figure 2.10.1) is capable of supporting five (5) times the total weight of the cask (including contents) without exceeding the yield strength of the outer steel shell.

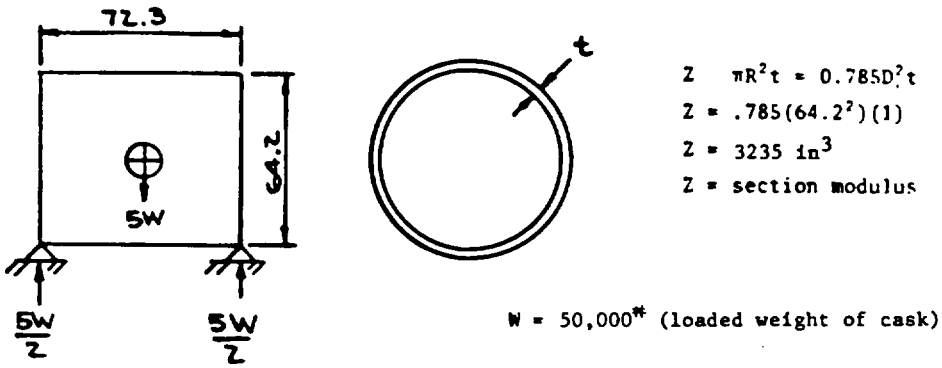

Figure 2.10.1 3-82B Cask as Simply Supported Beam

$M = (5/2)\ (50{,}000\ \text{lbs})\ (72.3\ \text{in}/2) = 4.519 \times 10^6\ \text{in-lb}.$

$$\sigma = \frac{M}{Z} = \frac{4.519 \times 10^6\ \text{in-lb}}{3{,}235\ \text{in}^3} = 1397\ \text{psi}$$

$$\text{safety factor} = \frac{30{,}000\ \text{psi}}{1{,}397\ \text{psi}} = 21.5$$

2.10.2 Pressure Loading

2.10.2.1 External Pressure

The 3-82B package is structurally adequate to assure that no loss of contents will result when the cask is subjected to an external pressure of 25 psi. Both the stress in the steel shell and the critical buckling pressure are calculated.

2.10.2.1.1 Stress in the steel shell

The outer steel shell stress, which is limiting, is calculated by:

$$\sigma_t = \frac{Pr}{t} = \frac{(25\ \text{psi})\ (32.1\ \text{in})}{1.0\ \text{in}} = 802\ \text{psi}$$

$$\text{safety factor} = \frac{30{,}000\ \text{psi}}{802\ \text{psi}} = 37.4$$

Where: r = outer steel shell radius = 32.1 in.

t = outer shell thickness = 1.0 in.

2.10.2.1.2 Critical buckling pressure

The shell critical buckling pressure for elastic instability is calculated by:

$$P_{crit} = 1/4\ \frac{E}{1-v^2}\left(\frac{t}{r}\right)^3 \qquad \text{(Ref. 2-2, page 354, case 30)}$$

Where: E = modulus = 30×10^6 psi

v = Poisson's ratio = 0.3

$$P_{crit} = \frac{1}{4} \frac{30 \times 10^6 \text{ psi}}{1 - (.3)^2} \left(\frac{1.0}{32.1}\right)^3 = 250 \text{ psi}$$

$$25 \text{ psi} < 250 \text{ psi}$$

Hence, the shell will not buckle.

2.10.2.2 Cask Internal Vacuum

The 3-82B cask will also withstand an internal pressure of 1/2 atmosphere (7.35 psia).

(a) Inner Steel Shell Stress

The hoop stress in the inner steel shell is:

$$\sigma = \frac{Pr}{t} = \frac{(7.35 \text{ psi})(27 \text{ in})}{(.375 \text{ in})} = 528 \text{ psi}$$

$$\text{Safety factor} = \frac{30{,}000 \text{ psi}}{508 \text{ psi}} = 57$$

2.10.3 Cask Lifting Devices

The cask lifting lugs are designed to support at least three (3) times the total loaded weight of the 3-82B cask. Hence, each of the three lifting lugs can support the total weight of the cask.

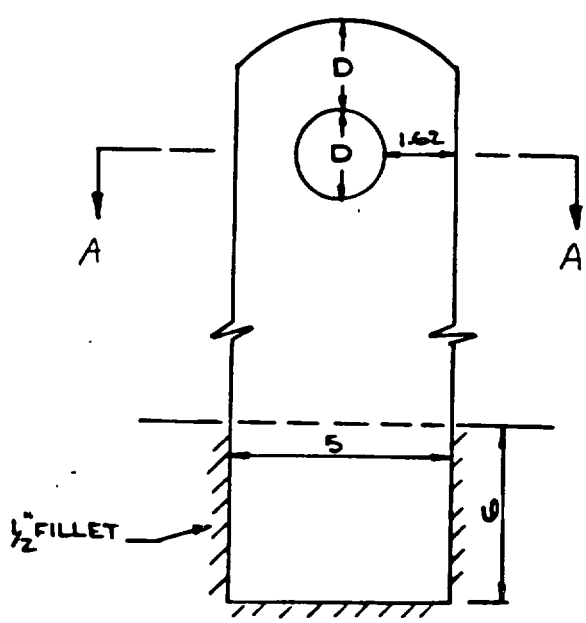

w = 50,000#
D = Hole diam. = 1.87in
d = Pin diam.= 1.75in
t = lug thickness=1.0in

Figure 2.10.2 Lifting Lug Model

2.10.3.1 Tear Stress (Across Plane A-A)

$$\sigma_T = \frac{W}{A} = \frac{50{,}000\#}{2(1.62\ \text{in})(1.0\ \text{in})} = 15{,}432\ \text{psi}$$

$$\text{Safety factor} = \frac{30{,}000}{15{,}432} = 1.94$$

2.10.3.2 Pin Bearing Stress

$$\sigma_{BR} = \frac{W}{d(1)} = \frac{50{,}000\#}{1.75\ \text{in}^2} = 28{,}571\ \text{psi}$$

$$\text{Safety factor} = \frac{30{,}000\ \text{psi}}{28{,}571\ \text{psi}} = 1.05$$

2.10.3.3 Pin Shear (Double Shear)

$$= \frac{W}{2(.785)(d^2)} = \frac{50{,}000\#}{(2)(.785)(1.75\text{in})^2} = 10{,}399\ \text{psi}$$

$$\text{Safety factor} = \frac{30{,}000\ \text{psi}}{10{,}399\ \text{psi}} = 2.88$$

2.10.3.4 Minimum Weld Length

ℓ_A = Actual weld length = 17 in

$$\ell_R \quad \text{Required weld length} = \frac{50{,}000\#}{\frac{18{,}000}{\sqrt{3}}\ (.5\text{in})\ (.707)} = 13.6\ \text{in}$$

$\ell_A > \ell_R$ or 17 in > 13.6 in; Hence there is adequate weld length.

$$\text{Safety factor} = \frac{17\ \text{in}}{13.6\ \text{in}} = 1.25$$

2.10.3.5 Bending Of Cask Lifting Device

The sideload necessary to yield the cask lifting lugs was calculated by:

$$M_{max} = \frac{S_{max}\ I}{C} = \frac{30{,}000(0.417)}{0.5} = 25{,}000\ \text{in-lbs.}$$

Side force = 25,000 in-lbs/4.12 in = 6068 lbs.

When the cask is lifted off center with the lifting frame, the sideforce is distributed equally to all three lugs. If each lug is to have less than 6068 pounds of sideforce, the angle the cask's centerline makes with the line from the crane is limited to 22°.

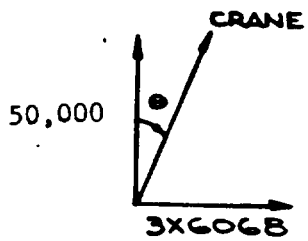

$$\theta = \tan^{-1}\frac{18,200}{50,000}$$

$$\theta \sim 20^{\circ}$$

Since experienced riggers will always be involved in any movement of the cask, the actual misalignment will never approach 22°. This special lifting frame will be used whenever the cask is lifted and will be available at the cask removal sites.

2.10.4 Other Lifting Devices

2.10.4.1 Cask Lid Lifting Device

Three lifting points have been provided in the cask lid, to accommodate the lift sling attachment. Each of the lifting points is capable of lifting the entire weight of the lid (conservatively assumed to be 6100 pounds).

Lifting Point for Cask Lid

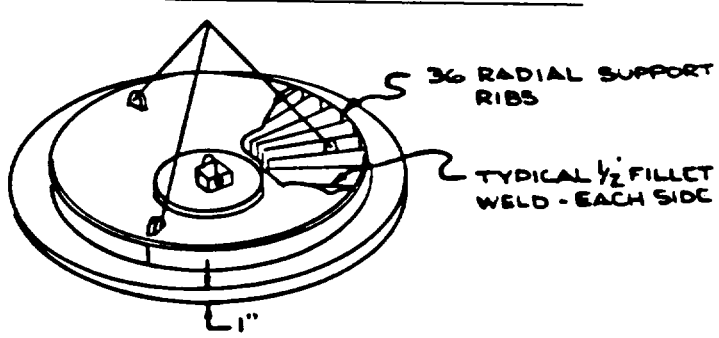

Figure 2.10-3 Cask Lid

2.10.4.1.1 "Clevis" Pin Connector

Each "clevis" pin connector has a rated lift capacity of 6500 pounds safe working load (see Fig. 2.10-3) and an ultimate strength of 37,000 pounds. Therefore, each connector is adequate.

2.10.4.1.2 Pin Bearing Stress

(Measured at pin - radial support web interface)

$$BR = \frac{W}{Dt} = \frac{6100\#}{(0.75in)(1.00in)} = 8130 \text{ psi}$$

$$\text{Safety factor} = \frac{30,000 \text{ psi}}{8,130 \text{ psi}} = 3.69$$

D = Pin diameter = 0.75 in

t = Radial rib wall thickness = 1.00 in

2.10.4.1.3 Radial Rib Weld

A 1/2" fillet is welded along each side of the radial support rib.

where: 1) ℓ_A = 15 in (actual weld length)

2) 3673 pound/inch length is the safe load per linear inch of 1/2" weld

Rib safe load = (4800#/in)(15.0 in)(2 welds) = 110,200#

110,200# >> 6,100#

The safe working load is much greater than the actual load (cask lid wt.), hence the rib weld length is adequate.

2.10.4.2 Shield Plug Lifting Device

The shield plug lifting device is a single "clevis" pin-type assembly. This assembly can safely lift a working load of 1500 pounds and an ultimate of 9,000 pounds.

Shield plug wt. = 410 pounds

3 x 410 pounds = 1230 pounds < 1500 pounds

The above calculation indicates that the clevis pin can support in excess of three times the shield plug weight.

The following analyses show the adequacy of the connecting lug and the cover plate of the shield plug to support 3 times the plug weight.

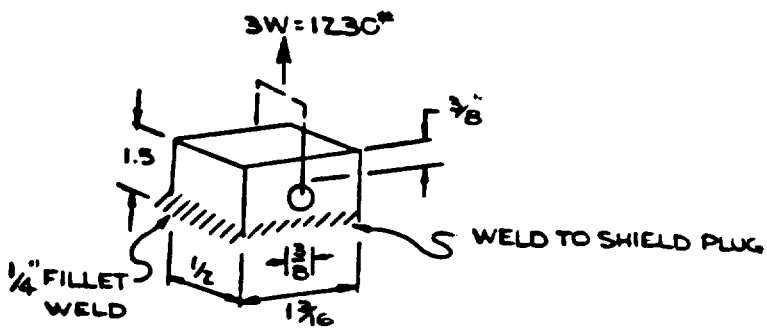

Figure 2.10-4. Shield Plug Connecting Lug

2.10.4.2.1 Connecting Lug Bearing Stress

$$\sigma_{BR} = \frac{3W}{A} = \frac{(3)(410\#)}{(.05in)(0.375in)} = 6{,}560 \text{ psi}$$

$$\text{Safety factor} = \frac{30{,}000 \text{ psi}}{6{,}560 \text{ psi}} = 4.56$$

2.10.4.2.2 Required Weld Length

1). Assuming 1836 pounds/in for 1/4" fillet weld.

2) Actual weld length = 2(0.5 in) + 2(1.187 in) = 3.375 in

The weld can support:

(1836 pounds/in) (3.375 in) = 6200 pounds

6200 pounds > 3W = 1230 pounds

Hence there is adequate weld length.

2.10.4.2.3 Stress in Shield Plug

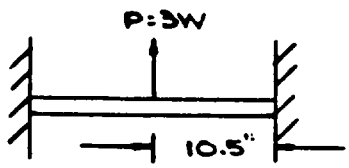

Figure 2.10-5 Sketch of Shield Plug and Support

The maximum stress in the shield plug is determined by the equation for a circular plate damped at the edges with a concentrated load at the center.

$\sigma_{max} = P/t^2\ (1.3)\ (.485 \log a/t + .52)$ Ref. 2-3, pg. 71

P = 3(410 pounds) = 1230 pounds

a = Plug radius = 10.5 in.

t = outer shell plate thickness = 1.0 in

Yields: σ_{max} = 2655 psi safety factor = $\frac{30{,}000 \text{ psi}}{2{,}655 \text{ psi}} = 11.3$

2.10.5 Tiedown Analysis

The tiedown devices which are structural parts of the package must be capable of withstanding without generating stress in any material of the package in excess of its yield strength, a static force having:

- Vertical component of two times the weight of the package;
- Longitudinal horizontal component of ten times the weight of the package; and;

- Transverse horizontal component of five times the weight of the package.

In order to perform the analyses in compliance with this provision, it was necessary to assume a system of tiedown which would be capable of restraining the cask under the conditions noted above. For this purpose the cask tiedowns were assumed to consist of four adjustable steel pipes as shown in Figure 2.10-6, plus a shear ring at the cask base to firmly position the cask on the truck body.

The tiedowns actually used on the 3-82B are designed in accordance with D.O.T. regulations. These regulations require packages to be blocked and braced to not change positions and to be secured against movement under conditions normally incident to transport. Section 2.10 Appendix D contains the analysis of the requirements for tiedowns based on the combined loads resulting from maximum braking and turning on a radius and at a speed where the inner wheels are at the point of leaving the road. A seven-sixteenth inch steel cable would provide the combined required cable tension of 16,514 pounds. Accordingly, the three-quarter inch cables used as tiedowns on the 3-82B cask provide a factor of safety of approximately three, but would not allow the tiedown structures or the cask to be overstressed or damaged.

2.10.5.1 <u>10g Horizontal Load</u> (Longitudinal)

The forces imposed on the tiedowns can be evaluated using a moment balance about PT. "O" (Figure 2.10-6).

$$\Sigma M_o = 0 = -55\ (G)(W) + 49.5W + 77.2F_v + 68\ F_H$$

where: G = 10 (inertia load multiplier)

W = 50,000 pound loaded cask wt.

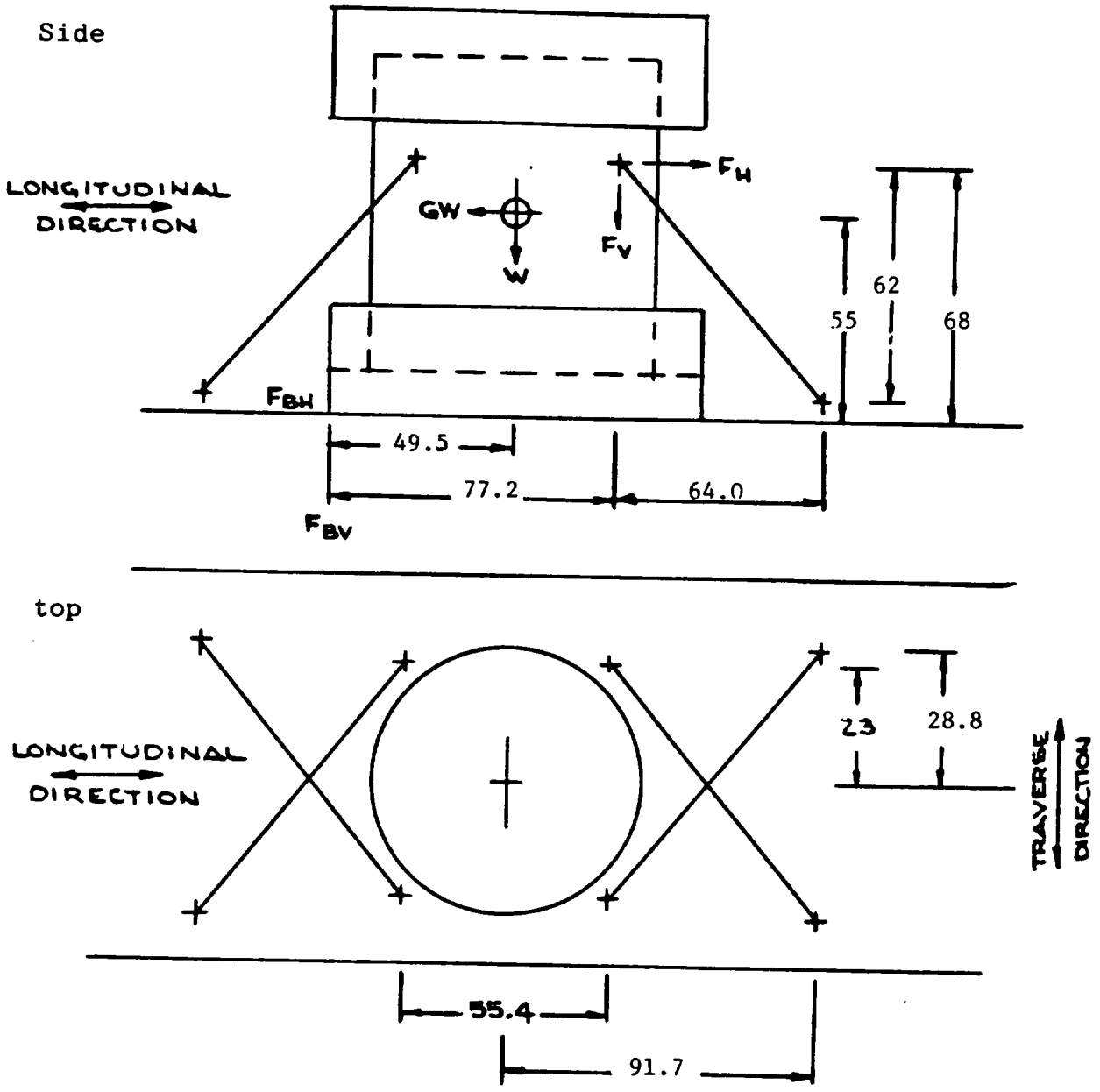

Figure 2.10-6 Tie Down Arrangement

By Geometry =

$$\frac{F_H}{F_V} = \frac{64.0}{62.0} \text{ or } F_H = 1.03\ F_V$$

then:

$$F_V = \frac{((55)(10) - 49.5)\ W}{77.2 + 1.03(68)} = 3.40W$$

$$F_H = (1.03)(3.40)W = 3.50W$$

Considering that each of the two tiedowns opposing the cask inertia share the load equally, the force component in each is:

$$F_{1V} = \frac{3.40}{2}\ W = 1.70W$$

$$F_{1H} = \frac{3.50}{2}\ W = 1.75W$$

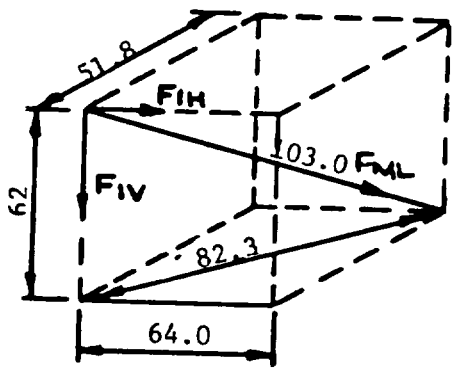

Figure 2.10-7 Force diagram of tiedowns

The maximum force in each tiedown (See Figure 2.10-7) as a result of a 10g longitudinal load is:

$$F_{ML} = 103.0\ \frac{F_{1H}}{64.0} = \frac{103.0}{64.0}\ (1.75\ W) = 2.82W$$

$$F_{ML} = 2.82\ (50{,}000\#) = 141{,}000 \text{ lbs}$$

2.10.5.2 <u>Transverse Loading</u>

Using the same procedure as performed for the 10g longitudinal loading:

$$M = 0 = -55GW + 49.5W + 101.3F_v + 68F_T$$

$$G = 5 \text{ (inertia load multiplier)}$$

$$F_V = \frac{((55)(5)-49.5)\ W}{101.3 + \frac{51.8}{62}\ 68} = \frac{225.5\ W}{158.1} = 1.43W$$

$$F_T = \frac{51.8}{62}\ Fv = \frac{51.8}{62}\ (1.43W) = 1.19W$$

Since there are two tiedowns, the force in each is:

$$F_{TV} = \frac{1.43W}{2} = 0.72W\ ;\ F_{IT} = \frac{1.19W}{2} = 0.60W$$

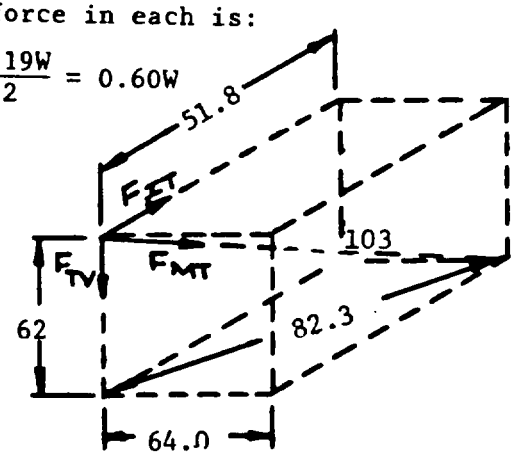

Figure 2.10-8 Force Diagram through Tiedowns for 5g Transverse Load

By Geometry:

$$F_{MT} = 103.0\ \frac{F_{IT}}{51.8} = \frac{103.1}{51.8}\ (0.60)(50{,}000\#) = 59{,}653\ \text{lbs.}$$

where: F_{MT} = Maximum force tiedowns as a result of a 5g transverse load.

2.10.5.3 <u>2g Vertical Loading</u>

The same procedure is utilized as in the 10g and 5g loading. The 2g vertical loading is opposed by the four tiedown members. The resulting forces in each member are determined by Figure 2.10-9.

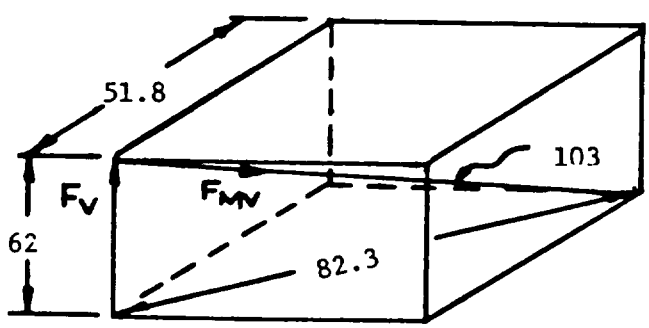

Figure 2.10-9 Force Diagram through Tiedowns for 2g Vertical Load

$$F_V = \frac{2(50{,}000\#)}{4(\text{tiedown})} = 25{,}000 \text{ lbs}$$

$$F_{MV} = 103.0 \ \frac{Fv}{62} = \frac{(103.0)\ (25{,}000\#)}{62} = 41{,}532 \text{ lbs}$$

where: F_{MV} = Maximum force in each tiedown as a result of a 2g vertical loading.

2.10.5.4 Tiedown Examination

Summarizing the result of Sections E-1 - E-3

Load	Maximum Tiedown Force
10g Longitudinal	F_{ML} = 141,000 lbs
5g Transverse	F_{MT} = 59,653 lbs
2g Vertical	F_{MV} = 41,532 lbs

Hence, the combined loading force is equal to 141,000 + 59,653 + 41,532 = 242,185 pounds.

2.10.5.5 (Section Deleted)

(INTENTIONALLY BLANK)

2.10.5.6 Analysis of Tiedown Loads on Cask Shell

The maximum tiedown loads into the cask shell resulting from the combined 10g-5g-2g loading are calculated in these sections. The cask tiedown attachments are shown to be adequate to safely withstand these loads.

The tiedown loads are transmitted into the cask shell as externally applied forces and moments. These moments are the product of the tiedown forces and the offset distance between the cylindrical shell and the line of action of the tie-down forces. The external moment has two component moments. These component moments are the products of the offset distance and the horizontal and vertical force components determined in the tiedown analysis. These forces were:

	10g load	5g load	2g load	combined load
F_{IV}	1.70W	0.72W	0.50W	2.92W
F_{IH}	1.75W	0.60W	0.0	2.35W

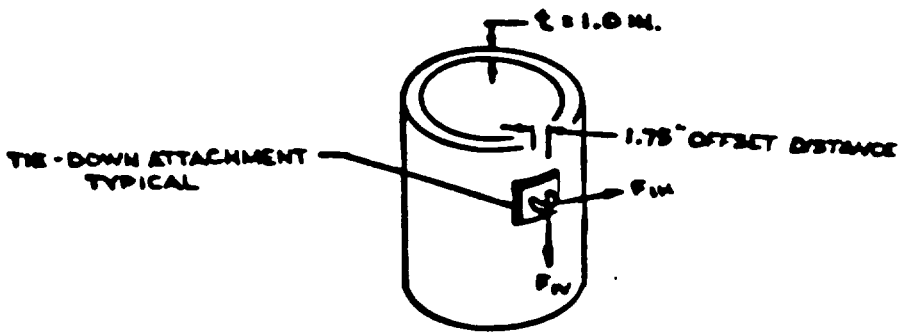

Figure 2.10-10 Tiedown Attachment

Where: W = 50,000# (cask wt. exclusive of tiedowns) using an offset distance of 1.75 in.

$$M = 1.75F, \quad \text{in-lbs} = (1.75)\ (2.92W) = 5.11W$$

$$M = 1.75F, \quad \text{in-lbs} = (1.75)\ (2.35W) = 4.11W$$

Defining M = External longitudinal moment

M = External circumferential moment

The resulting longitudinal and circumferential moments in the cask cylindrical outer steel shell from the external moments are obtained using the formula found in ref. 2-4, pg. 581.

Longitudinal moment: $M_X = .044 \dfrac{Mc}{aB} + .051 \dfrac{M}{aB}$

circumferential moment: $M = .085 \dfrac{Mc}{aB} + .052 \dfrac{M}{aB}$

where: a = cask outer shell radius = 32.1 in.

c = 1/2 mounting plate width $\dfrac{12 + 13}{2} \times 1/2 = 6.25$

B = dimensionless ratio = $\dfrac{c}{a} = \dfrac{6.25}{32} = 0.1953$

similarly using ref. 2-4, the membrane forces in the shell are longitudinal:

$$N_X = 2.6 \frac{Mc}{a^2B} + 1.37 \frac{M}{a^2B}$$

circumferential:

$$N = 1.32 \frac{Mc}{a^2B} + 3.4 \frac{M}{a^2B}$$

Substituting into these equations yields:

$$M_X = \frac{[0.044\ (3.85) + 0.051\ (5.11)]}{(32.0\ \text{in})\ (0.1953)} W = 0.0688W$$

$$M = \frac{[.085\ (3.85) + .032\ (5.11)]}{(32.0\ \text{in})\ (0.1953)} W = 0.0785W$$

$$N_X = \frac{[2.6\ (3.85) + 1.37\ (5.11)]W}{(32.0\ \text{in})^2\ (0.1953)} = 0.0851W$$

$$N = \frac{[1.32\ (3.85) + 3.4\ (5.11)]}{(32.0\ \text{in})^2\ (0.1953)} = 0.1123W$$

The maximum longitudinal and circumferential stresses in the cask outer steel shell are: (Ref. 2-4, page 581)

$$x(\text{max}) = \frac{6Mx}{t^2} + \frac{Nx}{t^2}$$

$$\mu_{(\text{max})} = \frac{6M}{t^2} + \frac{N}{t^2}$$

t = 1.0 in (outer steel shell wall thickness)

$$x(\text{max}) = \frac{6(0.0688)(50{,}000\#)}{1\ \text{in}^2} + \frac{(0.0851)(50{,}000\#)}{1\ \text{in}^2} = 24{,}895\ \text{psi}$$

$$\text{safety factor} = \frac{30{,}000\ \text{psi}}{24{,}895\ \text{psi}} = 1.21$$

$$\mu_{(\text{max})} = \frac{6(0.0785)(50{,}000\#)}{1\ \text{in}^2} + \frac{(0.1123)(50{,}000\#)}{1\ \text{in}^2} = 29{,}165\ \text{psi}$$

$$\text{safety factor} = \frac{30{,}000\ \text{psi}}{29{,}165\ \text{psi}} = 1.03$$

2.10.5.7 Analysis of Cask Tiedown Adaptor

The 3-82B cask tiedown adaptor is analyzed for the maximum 10g-5g-2g combined loading condition.

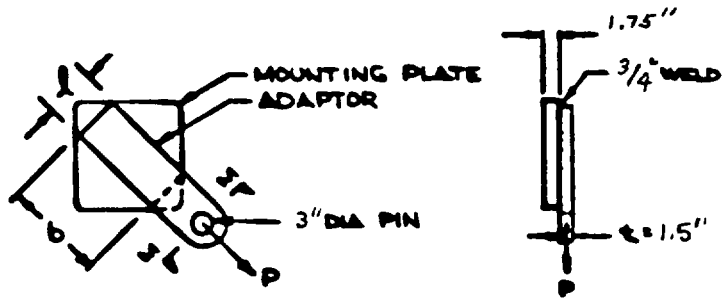

Figure 2.10-11 Cask Tiedown Adaptor Load Diagram

Let P = 242,185 lbs (See Section 2.10.5.4)

= Maximum tiedown force.

The adaptor is constructed of SA 203/E (or equivalent) low alloy steel having a yield strength of 60,000 psi.

2.10.5.7.1 Bearing Stress

The bearing stress in the pin hole is:

$$\sigma_{Br} = \frac{P}{Dt} = \frac{242,185}{(3\text{ in})(1.5\text{ in})} = 53,819\text{ psi}$$

$$\text{Safety factor} = \frac{60,000\text{ psi}}{53,819\text{ psi}} = 1.11$$

2.10.5.7.2 Tearing Stress

The tearing stress in plane "M - M" is:

$$\sigma_T = \frac{242,185}{(2)(1.5\text{ in})\ (1.5\text{ in})} = 53,819\text{ psi}$$

$$\text{Safety factor} = \frac{60,000\text{ psi}}{53,819\text{ psi}} = 1.11$$

2.10.5.7.3 Weld Strength Analysis

Stresses in the weld of the adapter to mounting plate are a result of the direct shear load and the external moment. The external moment is the product of the force - P, and the 1.75in offset distance to the line of action. The direct shear stress is:

$$\tau = \frac{242,185}{(1\text{in})(\frac{1}{\sqrt{2}})(27\text{in})} = 12,685\text{ psi}$$

for: Total weld length = 27" = ℓ

Fillet weld = 1" = h

The maximum stress due to the external moment

$$M = (1.75\text{ in})\ (242,185) = 423,824\text{ in-lb.}$$

$$\text{is } \sigma = \frac{4.24\ (423,824\text{ lb.})}{h\ [b^2 + 3\ell\ (b + h)]} = 1,725\text{ psi}$$

b = 10.5 in = base (see Figure 2.10-11)

The stress intensity based on the maximum shear theory is:

$$S = 2\sqrt{\frac{\sigma}{2}^2 + \tau^2} = 2\sqrt{\frac{1725^2}{2} + (12,685)^2} = 25,487\text{ psi}$$

$$\text{Safety factor} = \frac{30,000\text{ psi}}{25,487\text{ psi}} = 1.18$$

hence, the weld is adequate.

2.10.6 Thirty Foot Drop Condition

The 3-82B cask is designed to survive the impact resulting from a 30 foot free fall. Protective, crushable, urethane foam skirts are attached to the top and bottom of the cask. These protective skirts afford impact absorption for the cask, reducing the impact loads and increasing the time interval of the impact event. The crushing of the foam reduces the impact loads to inertia loadings, which are then calculated and analyzed by standard methods. The effect of the protective skirt is to completely prevent any permanent displacement of the cask metal, at any point of the cask body, after impact. Hence, all seals are maintained, and there is no loss of cask contents after the 30 foot drop. The orientation of the various impacts considered are as follows:

Section 2.10.6.1 - Corner Drop

Section 2.10.6.2 - End Drop

Section 2.10.6.3 - Side Drop

Each of the above analyses contains evaluation of the point of impact and the outer portions of the cask.

W = cask loaded wt. = 50,000#

The kinetic energy resulting from a 30 foot free fall is:

$KE = (50{,}000\#)\ (30\ ft)\ (12\ in/ft) = 18.0 \times 10^6$ in-lbs.

The physical properties of the high density polyurethane foam used in the analyses are derived from the compressive stress vs. percent compaction curve in Figure 2.10-15.

For each of the various impact analyses two cases were considered. The maximum g forces applied to the cask body were calculated by taking credit for the entire area of foam contacting the ground at impact and using the maximum

mechanical properties of the foam. The maximum crush depth of the foam was calculated by only taking credit for the foam which is directly below, or backed by, the cask body and using the minimum mechanical properties of the foam.

The method of determining the ability of the 3-82B impact skirts to absorb the energy generated from the 30-foot drop onto an unyielding surface is as follows:

1. The maximum allowable deformation is determined for the particular drop orientation. The criteria for the maximum deformation is based on non-contact of the unyielding surface with the cask body.

Example

Corner Drop

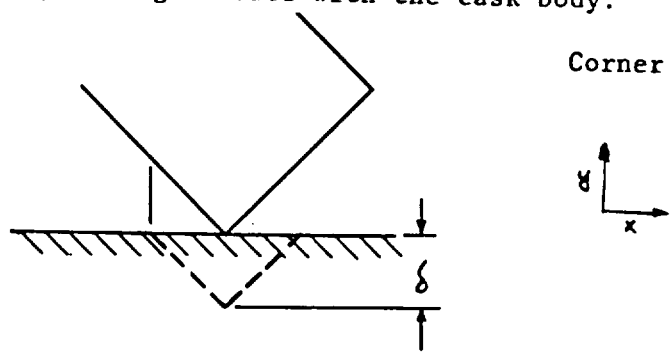

Figure 2.10.12

2. The contact surface is broken down into small sections based on the geometry of the effective foam.

   a) For the corner drop, the foam is broken down into 2"x2" sections because the height of the foam, y, varies with respect to the x and z axes.

   b) For the side drop, the contact surface is broken down into 2" x 2" sections because the height of the foam, z, varies with respect to the x and y axes.

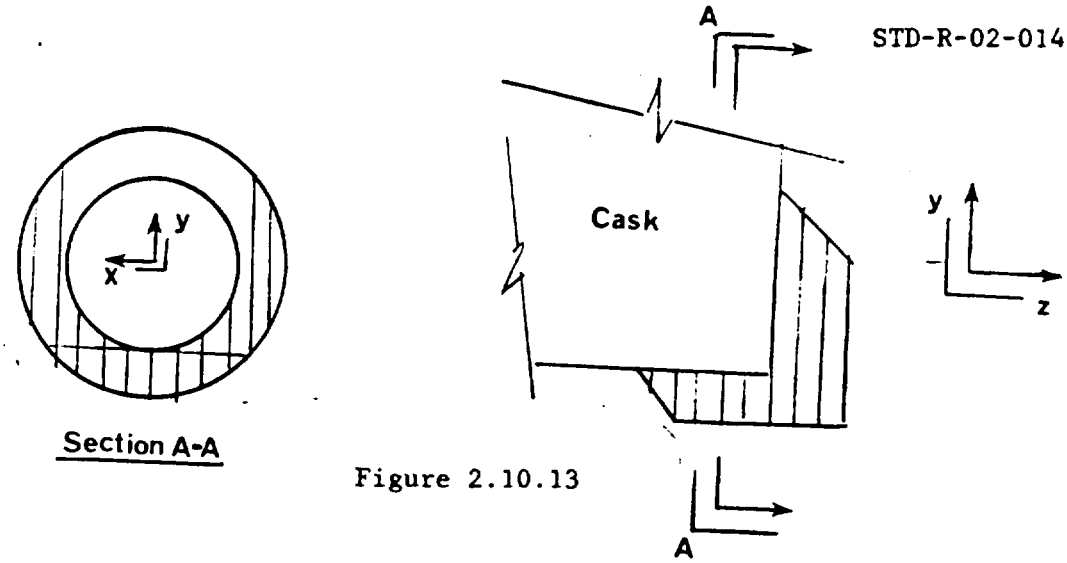

Figure 2.10.13

c) For the end drop(s); the contact surface is broken down into 1" long sections (radially measured) because the height of the foam, y, and the cross-sectional area of a section varies with respect to the x-axis.

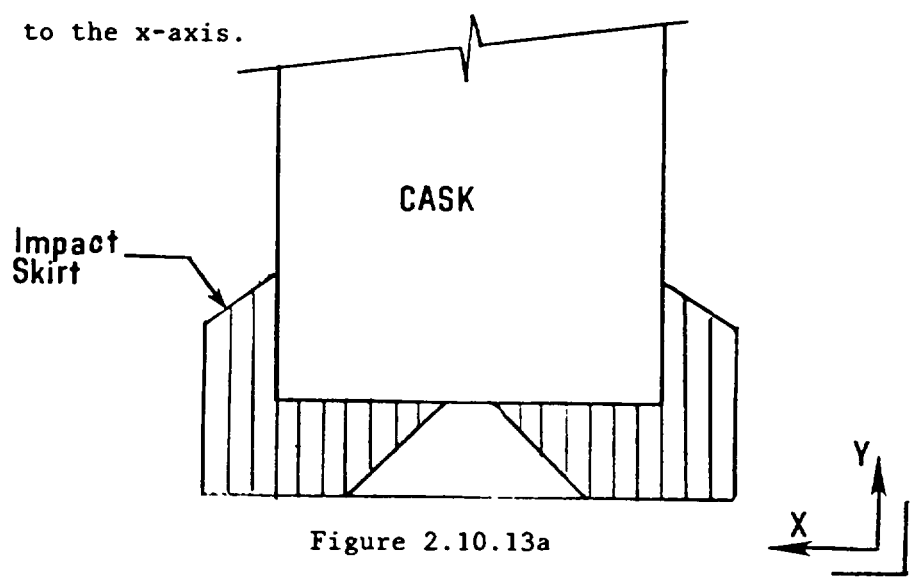

Figure 2.10.13a

3. The original length of each section is determined. This is the distance from the exterior skirt surface to the cask surface in the global y direction.

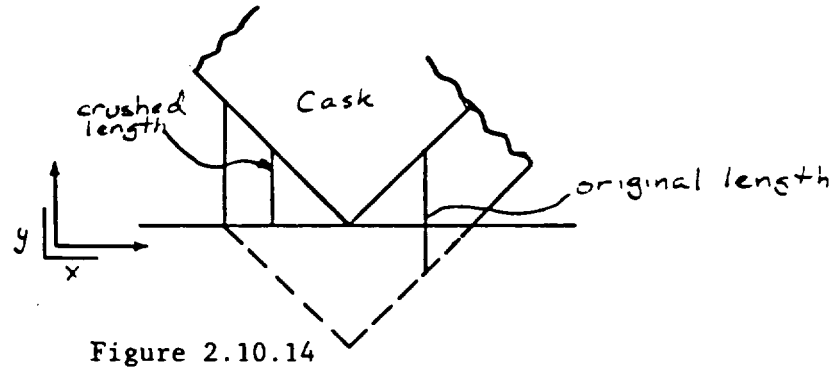

Figure 2.10.14

4. The crushed length of each section is determined as the distance from the unyielding surface to the cask body.

   Note: Both the original length and the crushed length of a given section are determined by finding the actual lengths of the four corner segments of the section and averaging the length of these segments.

5. For each section, a "percent crush" is determined by dividing the crushed length of the section by its original length.

6. This "percent crush" is used to determine the energy absorbed by the section of foam. Then energy absorbed by a unit volume of foam is found as follows:

   a) The foam manufacturer, General Plastics, has supplied SEG with a typical compressive strength curve for the particular foam to be used (below). The compressive strength curve for the as-poured foam is provided in Appendix F.

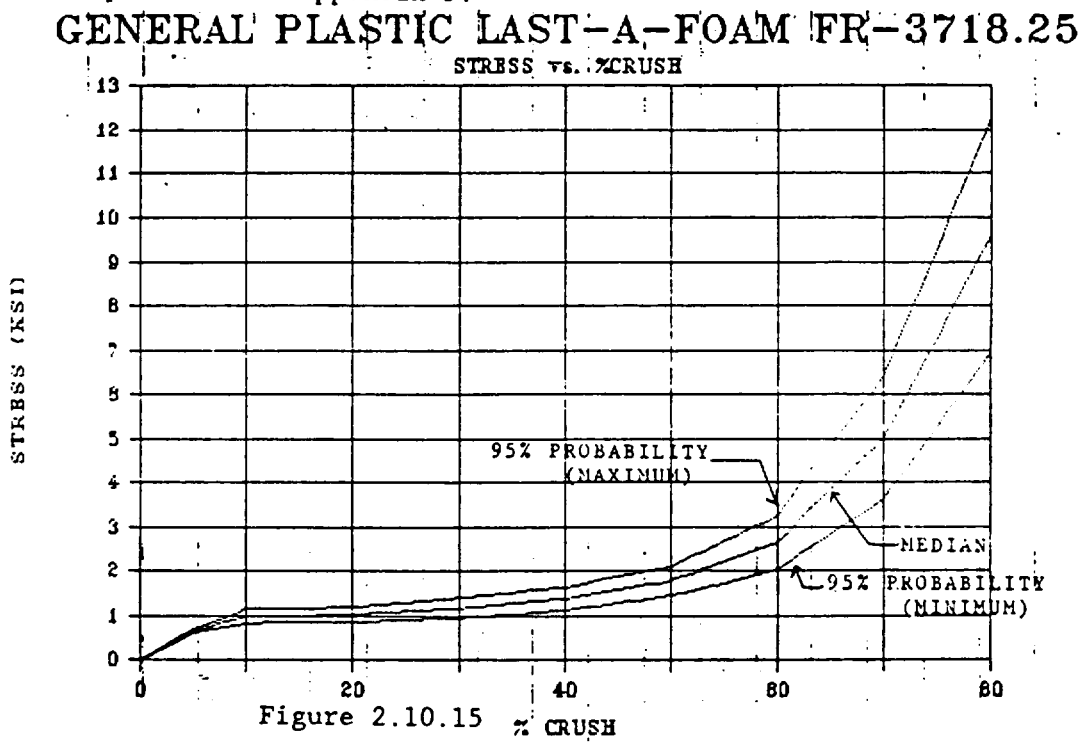

Figure 2.10.15

b) The energy absorbed per unit volume can be found by integrating the area under the stress strain curve

$$U = \int_0^{\varepsilon} \sigma \, AL \, d\varepsilon = AL \int_0^{\varepsilon} \sigma \, d\varepsilon$$

which can be approximated as

$$U = AL \sum_{i=1} (\sigma)(\Delta\varepsilon)$$

In order to make the approximation as accurate as possible $\Delta\varepsilon$ was set equal to 1%.

The energy per unit volume, AL, can be found in Figure 2.10.16 below.

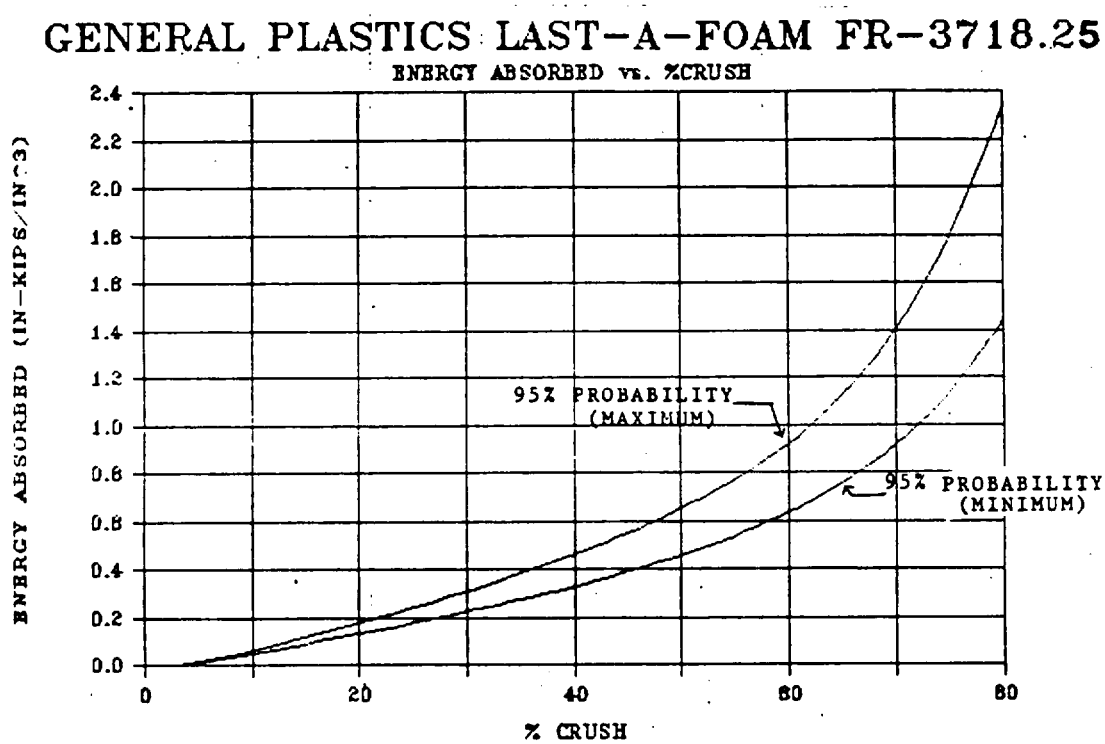

Figure 2.10.16

7. The energy absorbed by all of the effective crushed sections are then summed to find the total absorbed energy of the impact skirts. This value is compared to the energy generated from the 30-foot drop to determine the skirts adequacy.

8. The next step is to determine the inertia load factor translated into the cask components. In order to determine the load factors the actual deflection must first be determined. This deflection is found by trial and error methods.

9. The maximum inertia load factor can be found by summing the maximum stress of a section times the section area and dividing by the cask weight:

$$G = \frac{F}{W} = \frac{1}{W} \sum_{Wi-1}^{n} \sigma_i A_i$$

where n = number of sections
W = cask weight
G = unitless inertia load

10. The inertia load factors are applied to the critical cask components to determine the cask's adequacy.

2.10.6.1 Corner Drop

The geometric model used in the analysis can be found in Figure 2.10.17.

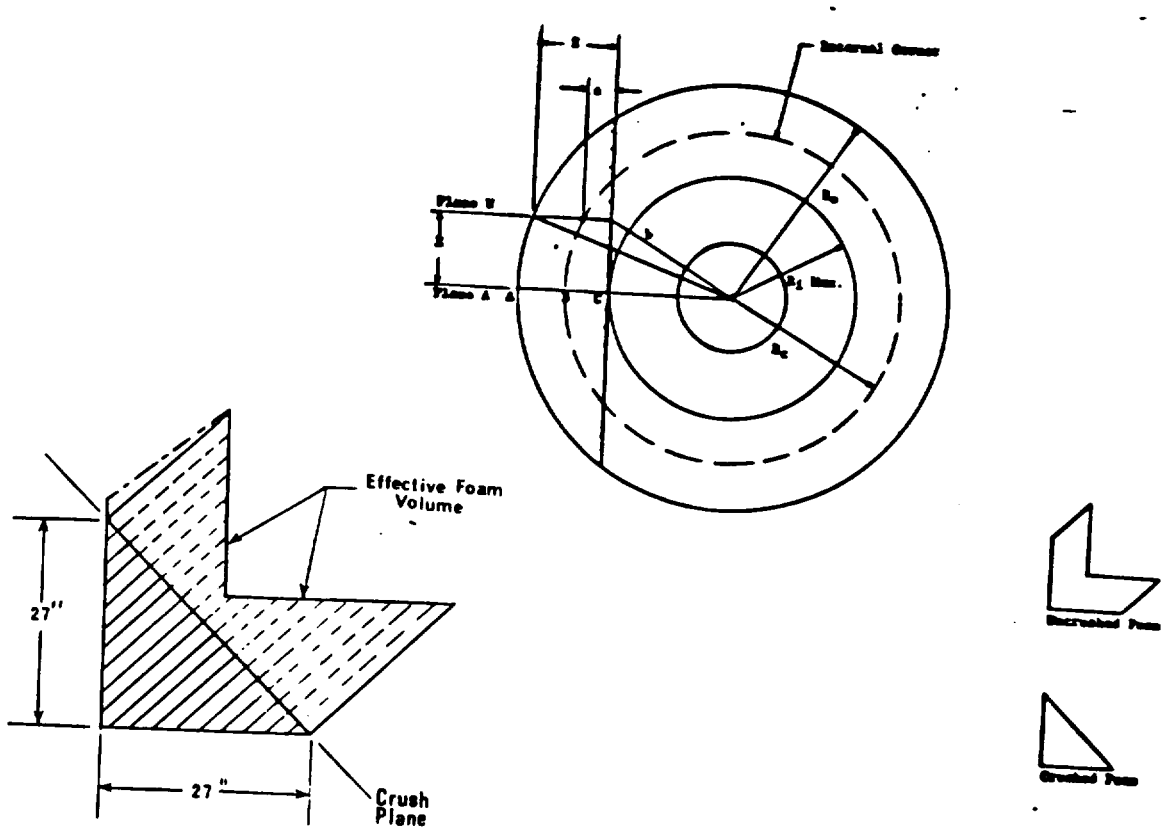

Figure 2.10.17

The corner drop presents the most complex geometry description of the required drops. Assumptions that are made in this analysis are as follows:

1) The angle of drop is 45° from the cask bottom surface to the ground. (Provides least available foam volume)

2) The center of gravity of the 3-82B assembly (cask and skirts) lies directly above the contact point (Maximum possible damage).

3) The 12-gauge steel canning has no impact absorbing potential.

4). Any small cut-out section of the foam (i.e., lift lug area) behaves in the same manner as the foam.

5) The top corner and the bottom corner drops are assumed to have similar results since their shapes in the effective regions are similar.

2.10.6.1.1 Calculation of Original and Crushed Lengths

Below is a typical crushed foam plane.

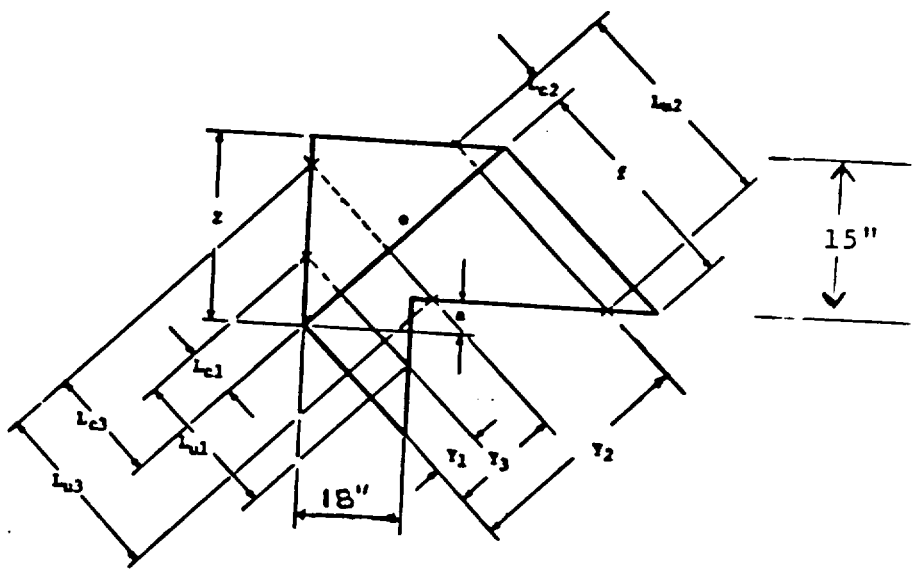

Figure 2.10.18 Top Corner Drop

The plane can be broken down into three separate regions. Region I is where the uncrushed length of the foam is a constant $27/\sqrt{2}$ = 19.1 in. Region II is where the original length is a constant value depending on the selected plane. And, Region III is where the original length is between the lengths of Region I and Region II.

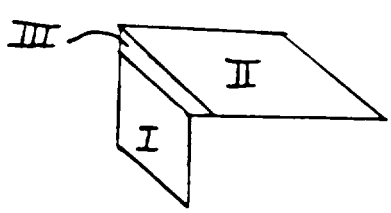

Figure 2.10.18a

L_u = uncrushed (original) length of foam

L_c = crushed length of foam

For Region I

$$L_{u1} = \sqrt{2} \cdot 18 \text{ in} = 25.5 \text{ in}$$

$$L_{c1} = y_1 \text{ (in)}$$

$$= y_1 \text{ is a known quantity } (0,2,4,6,8. \; . \; .)$$

For Region II

$$L_{u2} = f = \sqrt{2}\,(z-a) \text{ (in)}$$

Where: $a = \sqrt{R_c^2 - x^2} - R_i \text{ max}$

$$z = \sqrt{R_o^2 - x^2} - R_i \text{ max}$$

$$L_{c2} = \sqrt{2}z - y_2 \text{ (in)}$$

Where: y_2 is a known quantity (0,2,4,6,8...)

For Region III

$$L_{u3} = \sqrt{2}(z+18) - 2y_3 \text{ (in)}$$

$$L_{c3} = \sqrt{2}z - y_3 \text{ (in)}$$

Where: y_3 is a known quantity (0,2,4,6,8...)

The actual segment lengths for each of the four corners are calculated by the formulas listed above, and the average value is used as the section length. The calculations of the section lengths can be found in Section 2.10 Appendix A. The calculations were performed using a computer programmed to perform the calculations listed above.

Table 2.10.1 Summary of Foam Data

FOAM CHARACTERISTICS LAST-A-FOAM FR-3718.25(MEDIAN CURVE)
INPUT UNCRUSHED LENGTH= 1.0

CRUSH (%)	STRESS (KSI)	AVE. STRESS (KSI)	DEL. CRUSH IN	DEL ENERGY IN-KIPS/IN^2	TOTAL ENERGY IN-KIPS/IN2	AREA IN^2	ENERGY ABSORBED IN-KIPS/IN^2	G-LOADS /IN^2
0	0.00							
1	0.13	0.07	0.01	.00	.00	1.00	.00	0.003
2	0.26	0.20	0.01	.00	.00	1.00	.00	0.005
3	0.39	0.33	0.01	.00	0.01	1.00	0.01	0.008
4	0.52	0.46	0.01	.00	0.01	1.00	0.01	0.010
5	0.65	0.59	0.01	0.01	0.02	1.00	0.02	0.013
6	0.72	0.68	0.01	0.01	0.02	1.00	0.02	0.014
7	0.79	0.75	0.01	0.01	0.03	1.00	0.03	0.016
8	0.86	0.82	0.01	0.01	0.04	1.00	0.04	0.017
9	0.93	0.89	0.01	0.01	0.05	1.00	0.05	0.019
10	1.00	0.96	0.01	0.01	0.06	1.00	0.06	0.020
11	1.00	1.00	0.01	0.01	0.07	1.00	0.07	0.020
12	1.00	1.00	0.01	0.01	0.08	1.00	0.08	0.020
13	1.01	1.00	0.01	0.01	0.09	1.00	0.09	0.020
14	1.01	1.01	0.01	0.01	0.10	1.00	0.10	0.020
15	1.01	1.01	0.01	0.01	0.11	1.00	0.11	0.020
16	1.02	1.02	0.01	0.01	0.12	1.00	0.12	0.020
17	1.02	1.02	0.01	0.01	0.13	1.00	0.13	0.020
18	1.03	1.02	0.01	0.01	0.14	1.00	0.14	0.021
19	1.03	1.03	0.01	0.01	0.15	1.00	0.15	0.021
20	1.03	1.03	0.01	0.01	0.16	1.00	0.16	0.021
21	1.05	1.04	0.01	0.01	0.17	1.00	0.17	0.021
22	1.06	1.06	0.01	0.01	0.18	1.00	0.18	0.021
23	1.08	1.07	0.01	0.01	0.19	1.00	0.19	0.022
24	1.09	1.09	0.01	0.01	0.20	1.00	0.20	0.022
25	1.11	1.10	0.01	0.01	0.21	1.00	0.21	0.022
26	1.12	1.12	0.01	0.01	0.22	1.00	0.22	0.022
27	1.14	1.13	0.01	0.01	0.23	1.00	0.23	0.023
28	1.15	1.15	0.01	0.01	0.25	1.00	0.25	0.023
29	1.17	1.16	0.01	0.01	0.26	1.00	0.26	0.023
30	1.19	1.18	0.01	0.01	0.27	1.00	0.27	0.024
31	1.21	1.20	0.01	0.01	0.28	1.00	0.28	0.024
32	1.23	1.22	0.01	0.01	0.29	1.00	0.29	0.025
33	1.25	1.24	0.01	0.01	0.31	1.00	0.31	0.025
34	1.27	1.26	0.01	0.01	0.32	1.00	0.32	0.025
35	1.29	1.28	0.01	0.01	0.33	1.00	0.33	0.026
36	1.31	1.30	0.01	0.01	0.34	1.00	0.34	0.026
37	1.33	1.32	0.01	0.01	0.36	1.00	0.36	0.027
38	1.35	1.34	0.01	0.01	0.37	1.00	0.37	0.027
39	1.37	1.36	0.01	0.01	0.38	1.00	0.38	0.027
40	1.39	1.38	0.01	0.01	0.40	1.00	0.40	0.028
41	1.43	1.41	0.01	0.01	0.41	1.00	0.41	0.029
42	1.47	1.45	0.01	0.01	0.43	1.00	0.43	0.029
43	1.50	1.49	0.01	0.01	0.44	1.00	0.44	0.030
44	1.54	1.52	0.01	0.02	0.46	1.00	0.46	0.031
45	1.58	1.56	0.01	0.02	0.47	1.00	0.47	0.032
46	1.62	1.60	0.01	0.02	0.49	1.00	0.49	0.032
47	1.66	1.64	0.01	0.02	0.51	1.00	0.51	0.033
48	1.70	1.68	0.01	0.02	0.52	1.00	0.52	0.034
49	1.74	1.72	0.01	0.02	0.54	1.00	0.54	0.035
50	1.78	1.76	0.01	0.02	0.56	1.00	0.56	0.036
51	1.87	1.82	0.01	0.02	0.57	1.00	0.57	0.037
52	1.95	1.91	0.01	0.02	0.59	1.00	0.59	0.039
53	2.04	2.00	0.01	0.02	0.61	1.00	0.61	0.041
54	2.13	2.08	0.01	0.02	0.63	1.00	0.63	0.043
55	2.21	2.17	0.01	0.02	0.66	1.00	0.66	0.044
56	2.30	2.26	0.01	0.02	0.68	1.00	0.68	0.046
57	2.38	2.34	0.01	0.02	0.70	1.00	0.70	0.048
58	2.47	2.43	0.01	0.02	0.73	1.00	0.73	0.049
59	2.56	2.51	0.01	0.03	0.75	1.00	0.75	0.051
60	2.64	2.60	0.01	0.03	0.78	1.00	0.78	0.053
61	2.88	2.76	0.01	0.03	0.81	1.00	0.81	0.058
62	3.12	3.00	0.01	0.03	0.84	1.00	0.84	0.062
63	3.36	3.24	0.01	0.03	0.87	1.00	0.87	0.067
64	3.60	3.48	0.01	0.03	0.90	1.00	0.90	0.072

Table 2.10.1 (Continued)

FOAM CHARACTERISTICS LAST-A-FOAM FR-3718.25(MEDIAN CURVE)
INPUT UNCRUSHED LENGTH= 1.0

CRUSH (%)	STRESS (KSI)	AVE. STRESS (KSI)	DEL. CRUSH IN	DEL ENERGY IN-KIPS/IN^2	TOTAL ENERGY IN-KIPS/IN2	AREA IN^2	ENERGY ABSORBED IN-KIPS/IN^2	G-LOADS /IN^2
65	3.83	3.71	0.01	0.04	0.94	1.00	0.94	0.077
66	4.07	3.95	0.01	0.04	0.98	1.00	0.98	0.081
67	4.31	4.19	0.01	0.04	1.02	1.00	1.02	0.086
68	4.55	4.43	0.01	0.04	1.07	1.00	1.07	0.091
69	4.78	4.67	0.01	0.05	1.11	1.00	1.11	0.096
70	5.02	4.90	0.01	0.05	1.16	1.00	1.16	0.100
71	5.48	5.25	0.01	0.05	1.21	1.00	1.21	0.110
72	5.94	5.71	0.01	0.06	1.27	1.00	1.27	0.119
73	6.39	6.16	0.01	0.06	1.33	1.00	1.33	0.128
74	6.85	6.62	0.01	0.07	1.40	1.00	1.40	0.137
75	7.31	7.08	0.01	0.07	1.47	1.00	1.47	0.146
76	7.76	7.53	0.01	0.08	1.54	1.00	1.54	0.155
77	8.22	7.99	0.01	0.08	1.62	1.00	1.62	0.164
78	8.68	8.45	0.01	0.08	1.71	1.00	1.71	0.174
79	9.13	8.91	0.01	0.09	1.80	1.00	1.80	0.183
80	9.59	9.36	0.01	0.09	1.89	1.00	1.89	0.192

FOAM CHARACTERISTICS LAST-A-FOAM FR-3718.25 LOWER LIMIT (MEDIAN CURVE-2*STANDARD DEVIATIONS)
INPUT UNCRUSHED LENGTH= 1.0

CRUSH (%)	STRESS (KSI)	AVE. STRESS (KSI)	DEL. CRUSH IN	DEL ENERGY IN-KIPS/IN^2	TOTAL ENERGY IN-KIPS/IN2	AREA IN^2	ENERGY ABSORBED IN-KIPS/IN^2	G-LOADS /IN^2
0	0.00							
1	0.12	0.06	0.01	.00	.00	1.00	.00	0.002
2	0.24	0.18	0.01	.00	.00	1.00	.00	0.005
3	0.36	0.30	0.01	.00	0.01	1.00	0.01	0.007
4	0.48	0.42	0.01	.00	0.01	1.00	0.01	0.010
5	0.60	0.54	0.01	0.01	0.02	1.00	0.02	0.012
6	0.65	0.62	0.01	0.01	0.02	1.00	0.02	0.013
7	0.70	0.67	0.01	0.01	0.03	1.00	0.03	0.014
8	0.74	0.72	0.01	0.01	0.04	1.00	0.04	0.015
9	0.79	0.77	0.01	0.01	0.04	1.00	0.04	0.016
10	0.84	0.82	0.01	0.01	0.05	1.00	0.05	0.017
11	0.84	0.84	0.01	0.01	0.06	1.00	0.06	0.017
12	0.85	0.84	0.01	0.01	0.07	1.00	0.07	0.017
13	0.85	0.85	0.01	0.01	0.08	1.00	0.08	0.017
14	0.85	0.85	0.01	0.01	0.08	1.00	0.08	0.017
15	0.85	0.85	0.01	0.01	0.09	1.00	0.09	0.017
16	0.86	0.85	0.01	0.01	0.10	1.00	0.10	0.017
17	0.86	0.86	0.01	0.01	0.11	1.00	0.11	0.017
18	0.86	0.86	0.01	0.01	0.12	1.00	0.12	0.017
19	0.86	0.86	0.01	0.01	0.13	1.00	0.13	0.017
20	0.87	0.86	0.01	0.01	0.14	1.00	0.14	0.017
21	0.87	0.87	0.01	0.01	0.15	1.00	0.15	0.017
22	0.88	0.88	0.01	0.01	0.15	1.00	0.15	0.018
23	0.89	0.89	0.01	0.01	0.16	1.00	0.16	0.018
24	0.90	0.90	0.01	0.01	0.17	1.00	0.17	0.018
25	0.91	0.91	0.01	0.01	0.18	1.00	0.18	0.018
26	0.92	0.92	0.01	0.01	0.19	1.00	0.19	0.018
27	0.93	0.93	0.01	0.01	0.20	1.00	0.20	0.019
28	0.94	0.94	0.01	0.01	0.21	1.00	0.21	0.019
29	0.95	0.95	0.01	0.01	0.22	1.00	0.22	0.019
30	0.96	0.96	0.01	0.01	0.23	1.00	0.23	0.019
31	0.98	0.97	0.01	0.01	0.24	1.00	0.24	0.020
32	1.00	0.99	0.01	0.01	0.25	1.00	0.25	0.020
33	1.01	1.00	0.01	0.01	0.26	1.00	0.26	0.020
34	1.03	1.02	0.01	0.01	0.27	1.00	0.27	0.021
35	1.05	1.04	0.01	0.01	0.28	1.00	0.28	0.021
36	1.06	1.05	0.01	0.01	0.29	1.00	0.29	0.021
37	1.08	1.07	0.01	0.01	0.30	1.00	0.30	0.021
38	1.10	1.09	0.01	0.01	0.31	1.00	0.31	0.021
39	1.11	1.10	0.01	0.01	0.32	1.00	0.32	0.022
40	1.13	1.12	0.01	0.01	0.33	1.00	0.33	0.022
41	1.16	1.14	0.01	0.01	0.34	1.00	0.34	0.022

Table 2.10.1 (Continued)

FOAM CHARACTERISTICS LAST-A-FOAM FR-3718.25 LOWER LIMIT (MEDIAN CURVE-2*STANDARD DEVIATIONS)
INPUT UNCRUSHED LENGTH= 1.0

CRUSH (%)	STRESS (KSI)	AVE. STRESS (KSI)	DEL. CRUSH IN	DEL ENERGY IN-KIPS/IN^2	TOTAL ENERGY IN-KIPS/IN2	AREA IN^2	ENERGY ABSORBED IN-KIPS/IN^2	G-LOADS /IN^2
42	1.19	1.18	0.01	0.01	0.36	1.00	0.36	0.024
43	1.22	1.21	0.01	0.01	0.37	1.00	0.37	0.024
44	1.26	1.24	0.01	0.01	0.38	1.00	0.38	0.025
45	1.29	1.27	0.01	0.01	0.39	1.00	0.39	0.026
46	1.32	1.30	0.01	0.01	0.41	1.00	0.41	0.026
47	1.35	1.33	0.01	0.01	0.42	1.00	0.42	0.027
48	1.38	1.37	0.01	0.01	0.43	1.00	0.43	0.028
49	1.41	1.40	0.01	0.01	0.45	1.00	0.45	0.028
50	1.45	1.43	0.01	0.01	0.46	1.00	0.46	0.029
51	1.50	1.47	0.01	0.01	0.48	1.00	0.48	0.030
52	1.56	1.53	0.01	0.02	0.49	1.00	0.49	0.031
53	1.62	1.59	0.01	0.02	0.51	1.00	0.51	0.032
54	1.68	1.65	0.01	0.02	0.52	1.00	0.52	0.034
55	1.74	1.71	0.01	0.02	0.54	1.00	0.54	0.035
56	1.80	1.77	0.01	0.02	0.56	1.00	0.56	0.036
57	1.86	1.83	0.01	0.02	0.58	1.00	0.58	0.037
58	1.92	1.89	0.01	0.02	0.60	1.00	0.60	0.038
59	1.98	1.95	0.01	0.02	0.61	1.00	0.61	0.040
60	2.03	2.00	0.01	0.02	0.63	1.00	0.63	0.041
61	2.19	2.11	0.01	0.02	0.66	1.00	0.66	0.044
62	2.35	2.27	0.01	0.02	0.68	1.00	0.68	0.047
63	2.51	2.43	0.01	0.02	0.70	1.00	0.70	0.050
64	2.67	2.59	0.01	0.03	0.73	1.00	0.73	0.053
65	2.83	2.75	0.01	0.03	0.76	1.00	0.76	0.057
66	2.99	2.91	0.01	0.03	0.79	1.00	0.79	0.060
67	3.15	3.07	0.01	0.03	0.82	1.00	0.82	0.063
68	3.31	3.23	0.01	0.03	0.85	1.00	0.85	0.066
69	3.46	3.39	0.01	0.03	0.88	1.00	0.88	0.069
70	3.62	3.54	0.01	0.04	0.92	1.00	0.92	0.072
71	3.96	3.79	0.01	0.04	0.96	1.00	0.96	0.075
72	4.29	4.12	0.01	0.04	1.00	1.00	1.00	0.080
73	4.62	4.45	0.01	0.04	1.04	1.00	1.04	0.082
74	4.95	4.78	0.01	0.05	1.09	1.00	1.09	0.089
75	5.28	5.11	0.01	0.05	1.14	1.00	1.14	0.106
76	5.61	5.44	0.01	0.05	1.19	1.00	1.19	0.112
77	5.94	5.78	0.01	0.06	1.25	1.00	1.25	0.119
78	6.27	6.11	0.01	0.06	1.31	1.00	1.31	0.125
79	6.60	6.44	0.01	0.06	1.38	1.00	1.38	0.132
80	6.93	6.77	0.01	0.07	1.45	1.00	1.45	0.139

FOAM CHARACTERISTICS LAST-A-FOAM FR-3718.25 UPPER LIMIT (MEDIAN CURVE+2*STANDARD DEVIATIONS)
INPUT UNCRUSHED LENGTH= 1.0

CRUSH (%)	STRESS (KSI)	AVE. STRESS (KSI)	DEL. CRUSH IN	DEL ENERGY IN-KIPS/IN^2	TOTAL ENERGY IN-KIPS/IN2	AREA IN^2	ENERGY ABSORBED IN-KIPS/IN^2	G-LOADS /IN^2
0	0.00							
1	0.14	0.07	0.01	.00	.00	1.00	.00	0.002
2	0.28	0.21	0.01	.00	.00	1.00	.00	0.006
3	0.42	0.35	0.01	.00	0.01	1.00	0.01	0.008
4	0.56	0.49	0.01	.00	0.01	1.00	0.01	0.011
5	0.70	0.63	0.01	0.01	0.02	1.00	0.02	0.014
6	0.79	0.75	0.01	0.01	0.02	1.00	0.02	0.016
7	0.88	0.84	0.01	0.01	0.03	1.00	0.03	0.018
8	0.97	0.93	0.01	0.01	0.04	1.00	0.04	0.019
9	1.06	1.02	0.01	0.01	0.05	1.00	0.05	0.021
10	1.15	1.11	0.01	0.01	0.06	1.00	0.06	0.023
11	1.15	1.15	0.01	0.01	0.08	1.00	0.08	0.023
12	1.16	1.16	0.01	0.01	0.09	1.00	0.09	0.023
13	1.16	1.16	0.01	0.01	0.10	1.00	0.10	0.023
14	1.17	1.17	0.01	0.01	0.11	1.00	0.11	0.023
15	1.17	1.17	0.01	0.01	0.12	1.00	0.12	0.023
16	1.18	1.18	0.01	0.01	0.13	1.00	0.13	0.024
17	1.18	1.18	0.01	0.01	0.15	1.00	0.15	0.024

Table 2.10.1 (Continued)

FOAM CHARACTERISTICS LAST-A-FOAM FR-3718.25 UPPER LIMIT (MEDIAN CURVE+2*STANDARD DEVIATIONS)
INPUT UNCRUSHED LENGTH= 1.0

CRUSH (%)	STRESS (KSI)	AVE. STRESS (KSI)	DEL. CRUSH IN	DEL ENERGY IN-KIPS/IN^2	TOTAL ENERGY IN-KIPS/IN2	AREA IN^2	ENERGY ABSORBED IN-KIPS/IN^2	G-LOADS /IN^2
18	1.19	1.19	0.01	0.01	0.16	1.00	0.16	0.024
19	1.19	1.19	0.01	0.01	0.17	1.00	0.17	0.024
20	1.20	1.20	0.01	0.01	0.18	1.00	0.18	0.024
21	1.22	1.21	0.01	0.01	0.19	1.00	0.19	0.024
22	1.24	1.23	0.01	0.01	0.21	1.00	0.21	0.025
23	1.26	1.25	0.01	0.01	0.22	1.00	0.22	0.025
24	1.28	1.27	0.01	0.01	0.23	1.00	0.23	0.026
25	1.30	1.29	0.01	0.01	0.24	1.00	0.24	0.026
26	1.32	1.31	0.01	0.01	0.26	1.00	0.26	0.026
27	1.35	1.34	0.01	0.01	0.27	1.00	0.27	0.027
28	1.37	1.36	0.01	0.01	0.28	1.00	0.28	0.027
29	1.39	1.38	0.01	0.01	0.30	1.00	0.30	0.028
30	1.41	1.40	0.01	0.01	0.31	1.00	0.31	0.028
31	1.43	1.42	0.01	0.01	0.33	1.00	0.33	0.029
32	1.46	1.44	0.01	0.01	0.34	1.00	0.34	0.029
33	1.48	1.47	0.01	0.01	0.35	1.00	0.35	0.030
34	1.50	1.49	0.01	0.01	0.37	1.00	0.37	0.030
35	1.53	1.51	0.01	0.02	0.39	1.00	0.39	0.031
36	1.55	1.54	0.01	0.02	0.40	1.00	0.40	0.031
37	1.57	1.56	0.01	0.02	0.42	1.00	0.42	0.031
38	1.60	1.59	0.01	0.02	0.43	1.00	0.43	0.032
39	1.62	1.61	0.01	0.02	0.45	1.00	0.45	0.032
40	1.65	1.63	0.01	0.02	0.46	1.00	0.46	0.033
41	1.69	1.67	0.01	0.02	0.48	1.00	0.48	0.034
42	1.74	1.72	0.01	0.02	0.50	1.00	0.50	0.035
43	1.79	1.76	0.01	0.02	0.52	1.00	0.52	0.036
44	1.83	1.81	0.01	0.02	0.53	1.00	0.53	0.037
45	1.88	1.86	0.01	0.02	0.55	1.00	0.55	0.038
46	1.93	1.90	0.01	0.02	0.57	1.00	0.57	0.039
47	1.97	1.95	0.01	0.02	0.59	1.00	0.59	0.039
48	2.02	2.00	0.01	0.02	0.61	1.00	0.61	0.040
49	2.07	2.04	0.01	0.02	0.63	1.00	0.63	0.041
50	2.12	2.09	0.01	0.02	0.65	1.00	0.65	0.042
51	2.23	2.17	0.01	0.02	0.67	1.00	0.67	0.045
52	2.34	2.29	0.01	0.02	0.70	1.00	0.70	0.047
53	2.46	2.40	0.01	0.02	0.72	1.00	0.72	0.049
54	2.57	2.51	0.01	0.03	0.75	1.00	0.75	0.051
55	2.68	2.63	0.01	0.03	0.77	1.00	0.77	0.054
56	2.80	2.74	0.01	0.03	0.80	1.00	0.80	0.056
57	2.91	2.86	0.01	0.03	0.83	1.00	0.83	0.058
58	3.03	2.97	0.01	0.03	0.86	1.00	0.86	0.061
59	3.14	3.08	0.01	0.03	0.89	1.00	0.89	0.063
60	3.25	3.20	0.01	0.03	0.92	1.00	0.92	0.065
61	3.57	3.41	0.01	0.03	0.95	1.00	0.95	0.071
62	3.89	3.73	0.01	0.04	0.99	1.00	0.99	0.078
63	4.20	4.05	0.01	0.04	1.03	1.00	1.03	0.084
64	4.52	4.36	0.01	0.04	1.08	1.00	1.08	0.090
65	4.84	4.68	0.01	0.05	1.12	1.00	1.12	0.097
66	5.15	5.00	0.01	0.05	1.17	1.00	1.17	0.103
67	5.47	5.31	0.01	0.05	1.23	1.00	1.23	0.109
68	5.79	5.63	0.01	0.06	1.28	1.00	1.28	0.116
69	6.10	5.95	0.01	0.06	1.34	1.00	1.34	0.122
70	6.42	6.26	0.01	0.06	1.40	1.00	1.40	0.128
71	7.00	6.71	0.01	0.07	1.47	1.00	1.47	0.140
72	7.59	7.29	0.01	0.07	1.54	1.00	1.54	0.152
73	8.17	7.88	0.01	0.08	1.62	1.00	1.62	0.163
74	8.75	8.46	0.01	0.08	1.71	1.00	1.71	0.175
75	9.33	9.04	0.01	0.09	1.80	1.00	1.80	0.187
76	9.92	9.63	0.01	0.10	1.89	1.00	1.89	0.198
77	10.50	10.21	0.01	0.10	2.00	1.00	2.00	0.210
78	11.08	10.79	0.01	0.11	2.10	1.00	2.10	0.222
79	11.66	11.37	0.01	0.11	2.22	1.00	2.22	0.233
80	12.25	11.96	0.01	0.12	2.34	1.00	2.34	0.245

2.10.6.1.2 Energy Absorption of Foam

The energy generated from the 30 foot drop is found by:

$$(PE) = U = mgh = (50{,}000 \text{ lbs})\ (30 \text{ ft})\ \frac{12 \text{ in}}{\text{ft.}} = 1.80 \times 10^7 \text{ in-lbs}$$

Through several iterations, the maximum foam deflection required to absorb this energy was found to be approximately 18.0 inches.

As 22.4 inches of foam are available to be crushed it can be concluded that:

Factor of Safety > 1.0

2.10.6.1.3 Calculation of Inertia Load for 16.0 inch Deflection

The maximum inertia load for the 16.0 in. deflection was determined by summing the maximum stress for each section times the section area. The results can be found in Section 2.10 Appendix A. For the 16.0 in. deflection:

Maximum Inertia (G) Load = 62.2

This load is applied to the cask components to satisfy the requirements of 10CFR71 Subpart F.

2.10.6.1.4 Fastener Stresses

To determine the fastener stresses, the component of the load (Wg) in the Y-direction, is equated to the tensile stress of the bolts and the resultant force of the foam (F_f) acting on the cask lid. It is conservatively assumed that the lid does not bend (energy absorption).

Looking at the primary cask lid and ignoring the body shear force the following free body diagram is developed:

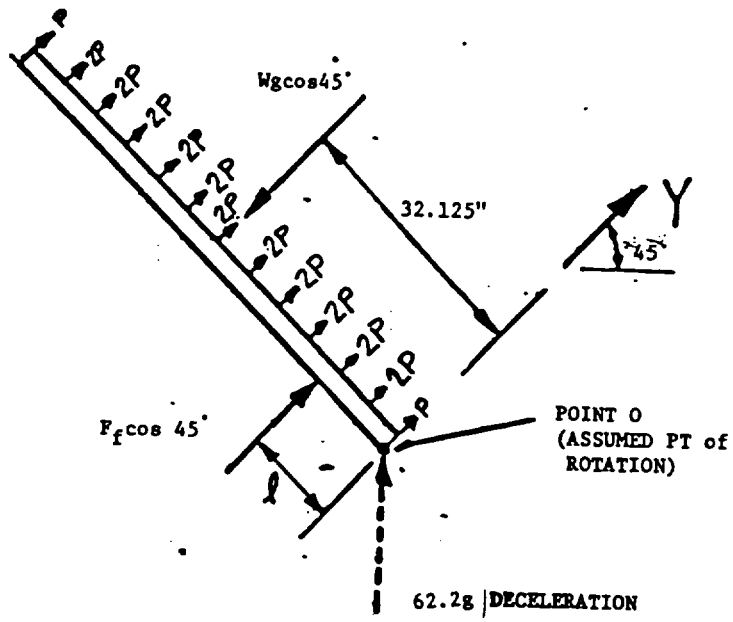

Figure 2.10.19

W = Wgt. of Contents + Wgt. of Primary Cask Lid

= 8,195 lbs + 6,000 lbs

= 14,195 lbs

g = Deceleration Force

= 62.2

The resultant force of the foam (F_f) is calculated by summing the forces in each of the 2" x 2" foam sections which are backed by the primary cask lid. These sections will be located in Region I of the crush plane. (Reference Figure 2.10.18a). The data required to calculate this is available from the computer output matrix labeled "Calculation of G-Loads (Maximum) for 16.0 inch Deflection". This matrix contains the actual foam stress for each section in kips/in^2 and can be found in Section 2.10 Appendix A.

F_f = (Σ Section Stress) (Cross Sectional Area) (2)
Located in Region I

F_f = 120.7 Ksi (2 in x 2 in) (2)

F_f = 960.0 Kips

It will be assumed that the resultant force of the foam (F_f) will act at the centroid of the projected area of the foam on the cask lid. The overall dimensions of this area can be calculated as follows:

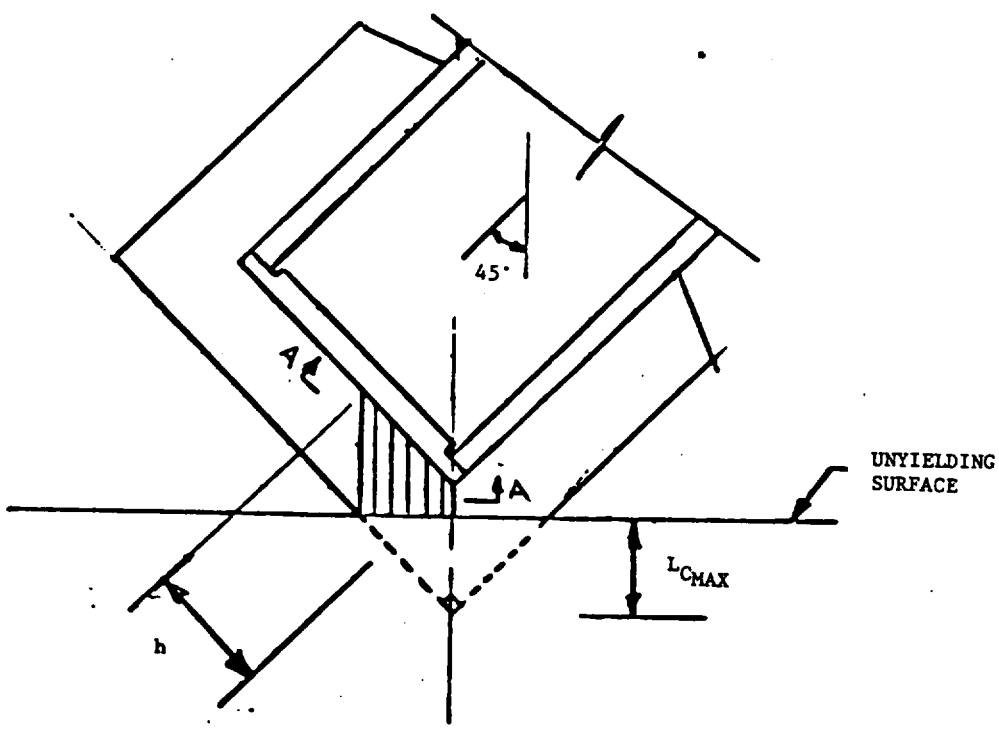

Figure 2.10.19a

from above it can be seen that

$h = Lc_{max}/\cos 45°$

$h = 16.0/\cos 45°$

$= 22.6$ inches

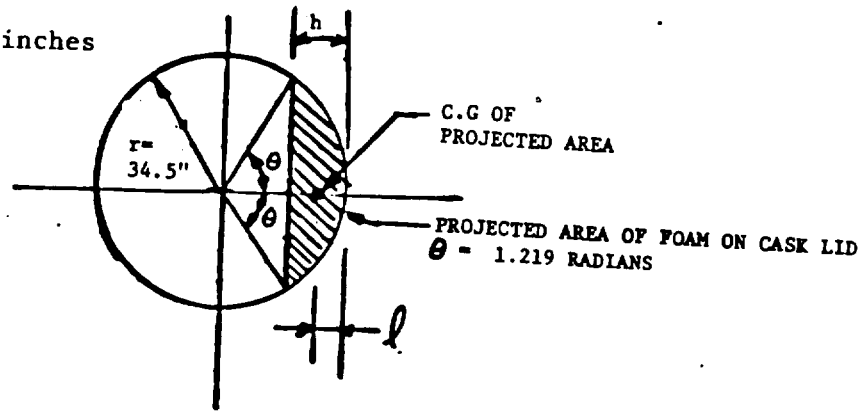

SECTION A-A

$$\ell = r \left[1 - \frac{2 \sin^3\theta}{3(\theta - \sin\theta\cos\theta)} \right]$$ Reference 2-2 page 68

$$= 34.5 \left[1 - \frac{2 \sin^3 1.219}{3(1.219 - \sin 1.219 \cos 1.219)} \right]$$

$= 13.3"$

Assuming complete separation of the primary lid from the body except at point 0

$\Sigma M_o = 0$

$$Wg \cos 45° \ (32.125) = \sum_{i=1}^{24} P_i \times d_i + F_f \cos 45° \ \ell$$

$$14{,}195 \ \cos 45° \ (32.125) \ (62.2) = \sum_{i=1}^{24} P_i \times d_i + 980{,}000 \cos 45° \ (13.3")$$

Where $P_i = P_{max} \times \frac{di}{d_{max}}$

$$20.06 \times 10^6 = \sum_{i=1}^{24} \frac{P_{max}}{d_{max}} \times d_i^2 + 9.03 \times 10^6$$

$$= \frac{P_{max}}{d_{max}} \times \sum_{i=1}^{24} d_i^2$$

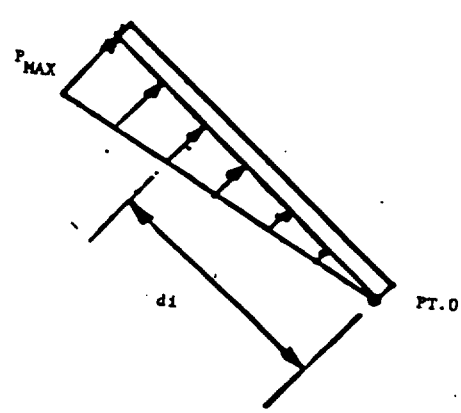

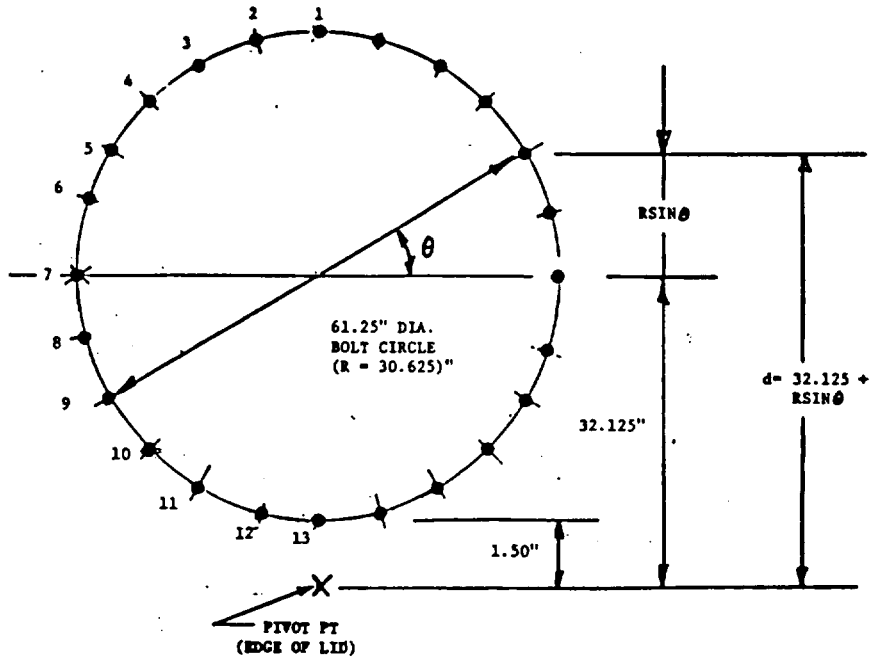

Figure 2.10.19b

Bolt Row	θ	R sin θ	d_i	Number of Bolts
1	90°	30.625	62.750	1
2	75°	29.581	61.706	2
3	60°	26.522	58.647	2
4	45°	21.655	53.780	2
5	30°	15.313	47.438	2
6	15°	7.926	40.051	2
7	0°	0.000	32.125	2
8	-15°	-7.926	24.199	2
9	-30°	-15.313	16.812	2
10	-45°	-21.655	10.470	2
11	-60°	-26.522	5.603	2
12	-75°	-29.581	2.544	2
13	-90°	-30.625	1.500	1

$$\sum_{i=1}^{13} \#\text{ bolts} \times d_i^2 = 36{,}023$$

$$\sum_{i=1}^{24} d_i^2 = 36{,}023 \text{ (see shts. 2-51)}$$

$$d_{max} = 62.75''$$

Therefore:

$$20.06 \times 10^6 = \frac{P_{max}}{62.75}(36{,}023) + 9.03 \times 10^6$$

$$\underline{P_{max} = 19{,}214 \text{ lbs}}$$

We must also consider the bolt preload due to the applied torque (190 to 210 ft-lbs). The total bolt load will then be found by superimposing the preload case onto the impact case.

$$\text{Max. Preload (Tension)} = \frac{\text{Applied Torque}}{.2d}$$

$$= \frac{(210 \text{ ft-lbs})\ (12''/\text{ft})}{.2\ (.838)}$$

$$= 15{,}036 \text{ lbs}$$

Max. Total Fastener Load @ Impact = 19,214 lbs + 15,036 lbs = 34,250 lbs

Fastener = 1" 8-UNC Studs

$$A_t = 0.606 \text{ in}^2$$

σ_t = 34,250 lbs/0.606 in^2
= 56,518 psi

For ASTM A354 Gr. BD Studs

σ_{yield} = 125,000 psi

Factor of Safety = 125,000 psi/56,518 psi
= 2.21

2.10.6.1.5 Stripping of Internal Thread (Plate-Lid)

Material ASTM A516 Gr55

σ_t = 55,000 psi min - 75,000 psi

σ_y = 30,000 psi

Depth of engagement = 1.75 in.

For 1" thread

Shear Area = 1/8 (1 in) (.9755 in) π per thread
= .383 in^2/thread

Total shear area = (.383 in^2/thread)(8 threads/in)(1.75 in)
= 5.36 in^2

τ = 34,250 lb/5.36 in^2
= 6,390 psi

τ allowable = (30,000 psi) ($1/\sqrt{3}$)
= 17,320 psi

Factor of Safety = 17,320 psi/6,390 psi
= 2.71

2.10.6.1.6 Shear Load

The shear load acting on the bolts in the x direction is counteracted by the contact area between the primary lid and the cask wall. Support from the skirt and the unyielding surface will also counteract the loads.

For the contact area alone

Area = 54 in (diameter) x 4 in min (contact height) = 216 in^2

WG in 45° = (Area) σ_b

W = wt of lid = 6,000 lbs

$$\sigma_b = \frac{(6{,}000 \text{ lbs})(62.2)(\sin 45°)}{216 \text{ in}^2} = 1{,}222 \text{ lb/in}^2$$

$$\underline{\text{Factors of Safety}} = \frac{30{,}000 \text{ psi}}{1{,}222 \text{ psi}} = \underline{24.5}$$

2.10.6.1.7 Gasket Integrity

This analysis is to verify that the cask will remain leak tight during the top corner drop. The distance that the primary cask lid will separate from the cask body is controlled by the elongation of the hold down fasteners. It is assumed that the primary lid does not bend and that the lid will completely separate from the cask body at Point O as shown below:

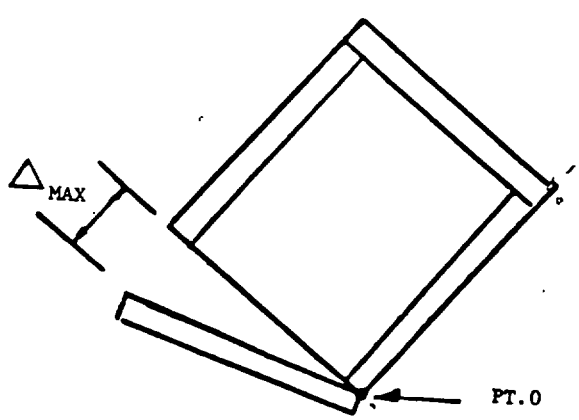

The maximum deflection can be related to the maximum tensile force in a bolt using the following formula:

$$\Delta_{max} = (P_{max})(L)/AE$$

Where:

P_{max} = total bolt load in tension at impact = 34,250 lbs

L = Grip length of bolt = 0.75 inches

A = tensile stress area = 0.606 in^2

Therefore:

$$\Delta_{max} = 34{,}250 \text{ lbs } (0.75 \text{ in})/0.606 \text{ in}^2 \ (29 \times 10^6 \text{ psi})$$
$$= 0.0015 \text{ inches}$$

This small deflection will have no effect on the gasket integrity and the cask will remain leak tight during the 30 foot corner drop test.

2.10.6.1.8 Cask Stress

The effect of the protective skirt is to completely prevent any permanent displacement of the cask metal, at any point of the cask body, after impact. Hence, all seals are maintained, and there is no loss of cask contents after the 30 foot corner drop.

The highest stresses in the cask body during the 30 foot corner drop will occur in the region of the cask which backs the impact skirt. The peak stress in this region will occur at point directly in line with the initial point of impact. The results of the analysis in Appendix A provides us with the data necessary to determine the cask stress at that point as the foam stress is provided

for each 2" x 2" foam section. This stress will be transferred to the cask backing this section.

For an 18.0 inch deflection it can be seen that the maximum percentage crush for any 2" x 2" foam section is 72%. This is for the section identified as AB1011. Referencing Table 2.10.1 (for minimum mechanical properties) (sheet 2-44) this correlates to an average stress in the foam section of 4.12 ksi. The yield strength of the cask steel is 30.0 ksi. Therefore it can be concluded that the cask metal remains elastic during impact and no permanent displacement of the cask metal will occur. All seals will be maintained and there will be no loss of cask contents.

2.10.6.2 End Drops

The geometric model used in the analysis can be found in Figure 2.10.20.

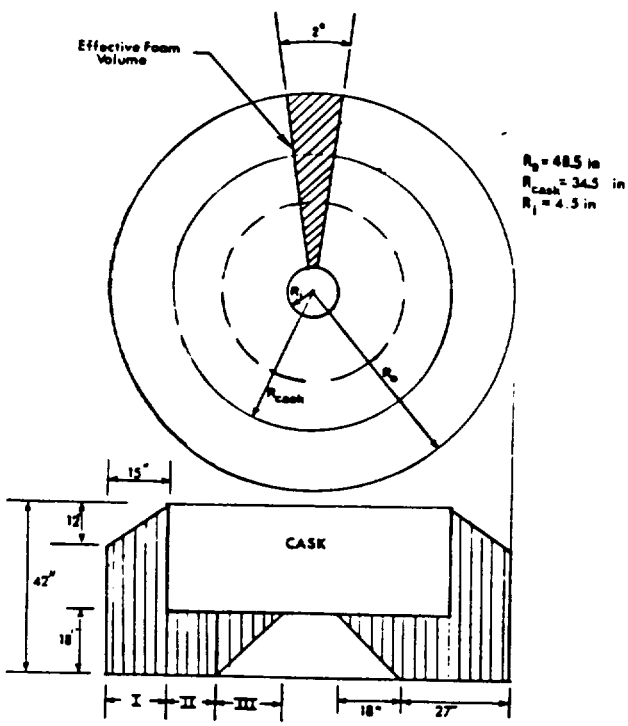

Figure 2.10.20

2.10.6.2.1 Calculation of Original and Crushed Lengths

Below a typical crushed foam plane:

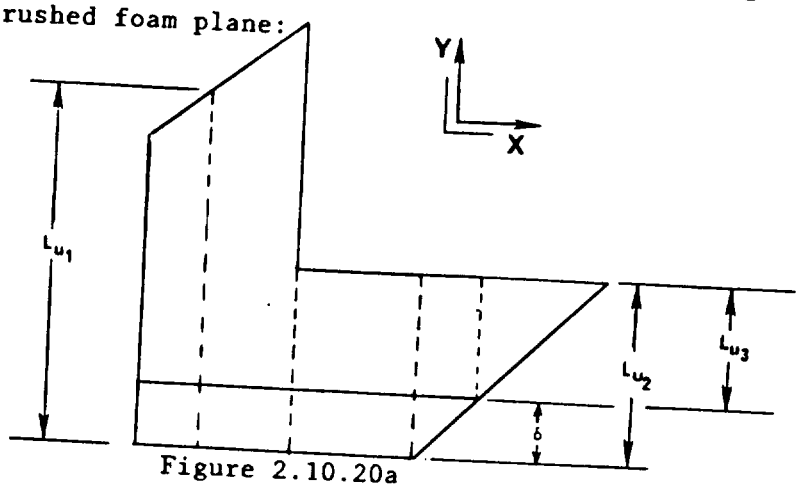

Figure 2.10.20a

The plane can be broken down into three separate regions. Regions I & III are where the original (uncrushed) length of foam varies. Region II is where the original length is a constant value. In all three regions the crushed length of foam is a constant (assumed) value.

For Region I:

$L_{u1} = 30.0 + 12.0/15.0\ x_1$ (in)

where: x_1 is a known quantity (0,1,2,3...)

L_{c1} = Assumed Crush Length (in)

Region II:

L_{u2} = 18.0 in (Constant)

L_{c2} = Assumed Crush Length (in)

Region III:

$L_{u3} = 18.0 - (x_3 - 27.0)$ (in)

where: x_3 is a known quantity (0,1,2,3...)

L_{c3} = Assumed Crush Length - $(x_3 - 27.0)$ (in)

The actual segment lengths for each of the four corners are calculated by the formulas listed above, and the average value is used as the section length. The calculations of the section lengths can be found in Section 2.10 Appendix C. The calculations were performed using a computer programmed to perform the calculations listed above. Two cases were considered. The maximum g force applied to the cask body were calculated by taking credit for the entire area of foam contacting the ground at impact (Regions I, II & III) and using the maximum mechanical properties of the foam. The maximum crush depth of the foam was calculated by only taking credit for the foam which is directly below, or backed by, the cask body (Regions II & III) and using the minimum mechanical properties of the foam.

2.10.6.2.2 Energy Absorption of Foam

The energy generated from the 30 foot drop is found by:

$$(\dot{DE}) = U = mgh = (50{,}000 \text{ lbs})(30 \text{ ft}) \frac{12.n}{\text{ft}} = 1.80 \times 10^7 \text{ in-lbs}$$

Through several iterations, the maximum foam deflection was found to be approximately 8.1 inches.

As 18.0 inches of foam are available to be crushed it can be concluded that:

Factor of Safety > 1.0

2.10.6.2.3 Calculation of Inertia Load for 3.85 inch Deflection

The maximum inertia load for the 3.85 inch deflection was determined by summing the maximum stress for each section times the section area. The results can be found in Section 2.10 Appendix C. For the 3.85 inch deflection:

Maximum Inertia (G) Load = 150.6

This load is applied to the cask components to satisfy the requirements of 10CFR71 Subpart F.

2.10.6.2.4 Plate Bending

It is assumed that the plates (top lid or bottom plate) are simply supported, therefore, the maximum bending stresses can be found in the case of the top drop (higher inertia loads).

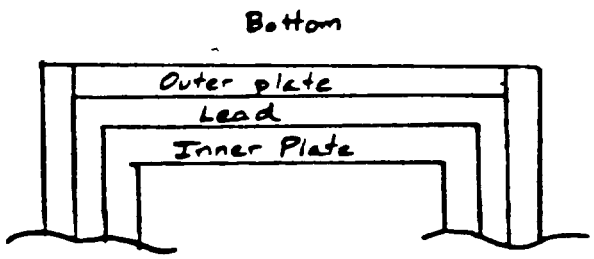

Figure 2.10.21

2.10.6.2.4.1 Outer Plate Deflection

$$\text{Wt outer plate} = \pi\ (27.0)^2\ (1.0\ \text{in})\ 490\ \text{lb/ft}^3\ \left(\frac{1}{12}\ \text{ft}\right)^3 = 649\ \text{lbs}$$

$WG = (649 \text{ lbs})(150.6) = 9.77 \times 10^4 \text{ lbs}$

q = load per unit area

$$q = \frac{9.77 \times 10^4 \text{ lbs}}{\pi\ (27.0 \text{ in})^2} = 42.7 \text{ lb/in}^2$$

$$Mc = \frac{qa^2\ (3+v)}{16} = 42.7 \text{ lb/in}^2\ \frac{(27.0 \text{ in})^2(3+.3)}{16} = 6{,}420 \text{ in-lbs}$$

$$\sigma = \frac{6M_c}{t^2} = \frac{6\ (6420 \text{ in-lb})}{(1.0 \text{ in})^2} = 38{,}520 \text{ lb/in}^2 \quad F.S. = \frac{55{,}000}{38{,}520} = 1.43$$

$$y_c = \frac{-qa^4\ (5 + v)}{64D\ (1 + v)} = \frac{(42.7 \text{ lb/in}^2)(27.0 \text{ in})^4\ (5 + .3)}{64\ (2.75 \times 10^6)(1 + .3)} = 0.53 \text{ in}$$

$$D = \frac{Et^3}{12\ (1-v^2)} = \frac{30 \times 10^6 \text{ psi } (1.0 \text{ in})^3}{12(1-.3^2)} = 2.75 \times 10^6$$

Compare deflection of outer plate to the deflection of inner plate to determine whether the weight of the outer plate should be used in calculating the bending stress of the inner plate.

2.10.6.2.4.2 <u>Inner Plate</u>

$$Wt_{\text{inner plate}} = \pi\ (27.0 \text{ in})^2\ (2.0)\ (490 \text{ lb/ft}^3)\ \left(\frac{1 \text{ ft}^3}{1728 \text{ in}^2}\right) = 1300 \text{ lb}$$

$$Wt_{\text{lead}} = \pi\ (27.0 \text{ in})^2\ (2.38)\ (710 \text{ lb/ft}^3)\ \left(\frac{1 \text{ ft}^3}{1728 \text{ in}^2}\right) = 2240 \text{ lb}$$

Total weight = 3540 lb

$Force = (3540 \text{ lb})\ (150.6) = 5.33 \times 10^5 \text{ lbs}$

$$q = \frac{5.33 \times 10^5 \text{ lb}}{\pi\ (27.0 \text{ in})^2} = 232.7 \text{ lb/in}^2$$

$$Mc = \frac{qa^2\ (3 + v)}{16} = 232.7 \text{ lb/in}^2\ \frac{(27.0 \text{ in})^2\ (3 + .3)}{16} = 3.50 \times 10^4 \text{ in-lb}$$

$$\sigma_b = \frac{6M_c}{t^2} = \frac{6\ (3.50 \times 10^4 \text{ in-lb})}{(2.0 \text{ in})^2} = 52{,}500 \text{ lb/in}^2$$

Since bending of this material does not effect the containment of the package the minimum tensile stress is used as the criteria.

For ASTM A516 Grade 55:

$\sigma t = 55{,}000 \text{ lb/in}^2$

$$\text{Factor of Safety} = \frac{55{,}000 \text{ lb/in}^2}{52{,}500 \text{ lb/in}^2} = 1.05$$

Deflection

$$D = \frac{Et^3}{12(1-v^2)} = \frac{(30 \times 10^6)(2.0 \text{ in})^3}{12\ (1-.3^2)} = 5.49 \times 10^6$$

$$y_c = \frac{-qa^4(5+v)}{64D\ (1+v)} = \frac{(232.7)(27.0)^4(5+.3)}{64\ (5.49 \times 10^6)\ (1+.3)} = 1.43 \text{ in} > 0.53 \text{ in from outer plate}$$

The inner plate does not support the outer plate for the end drop.

2.10.6.2.4.3 Weld Capacity

The inner plate weld is analyzed for its shear capacity from a top drop.

Total throat length of weld combination:

$t_1 = (.5 \text{ in})\ (.707) = .35 \text{ in}$

$t_2 = (2 \text{ in})\ (\sin 30°) = 1.0 \text{ in}$

$t_3 = (1.15 \text{ in})(\sin 30°) = .58 \text{ in}$

$t_{total} = 1.93 \text{ in}$

Weight of plate $= \pi\ (27.0 \text{ in})^2\ (490 \text{ lb}/1728 \text{ in}^3)\ (2.0 \text{ in}) = 1300 \text{ lbs.}$

Weight of lead = 2240 lbs

Total Deceleration Force = (3540 lbs)(150.6 g's) = 5.33×10^5 lbs

Shear Area $= (1.93 \text{ in})(2\pi)(27.0 \text{ in}) = 327 \text{ in}^2$

$$\text{Shear Stress} = \frac{5.33 \times 10^5 \text{ lbs}}{327 \text{ in}^2} = 1630 \text{ lb/in}^2$$

$$\text{Factor of Safety} = \frac{18{,}000 \text{ psi}}{1630 \text{ psi}} = 11.0$$

2.10.6.2.5 Lead Slump

Reference Cask Designers Guide

Weight of lead cylinder

$$Wt_b = \pi\ (Ro^2 - R_i^2)\ h\ \rho_{lead}$$

$$= \pi\ [(31.125\ in)^2 - (27.375\ in)^2]\ (67.12\ in)\ (710\ lb/1728\ in^3)$$

$$= 19{,}000\ lbs$$

Force = Wt. (G's) = (19,000 lb)(150.6) = 2.86×10^6 lb

Area of lead = $\pi\ (31.125)^2 - (27.375)^2 = 690\ in^2$

$$\text{Stress} = \frac{F}{A} = \frac{2.86 \times 10^6\ lb}{690\ in^2} = 4147\ lb/in^2$$

This stress falls below the dynamic yield stress of lead (5000 lb/in^2 - 18,000 lb/in^2). Therefore little deformation (slump) in the lead is expected.

$$\Delta l = \frac{PL}{AE} = \frac{(2.86 \times 10^6\ lb)(67.12\ in)}{(690\ in^2)\ (2 \times 10^6\ lb/in^2)} = 0.139\ in.$$

This deflection would not reduce the shielding capabilities of the cask.

2.10.6.3 Side Drop

The geometric model used in the analysis can be found in Figure 2.10.23.

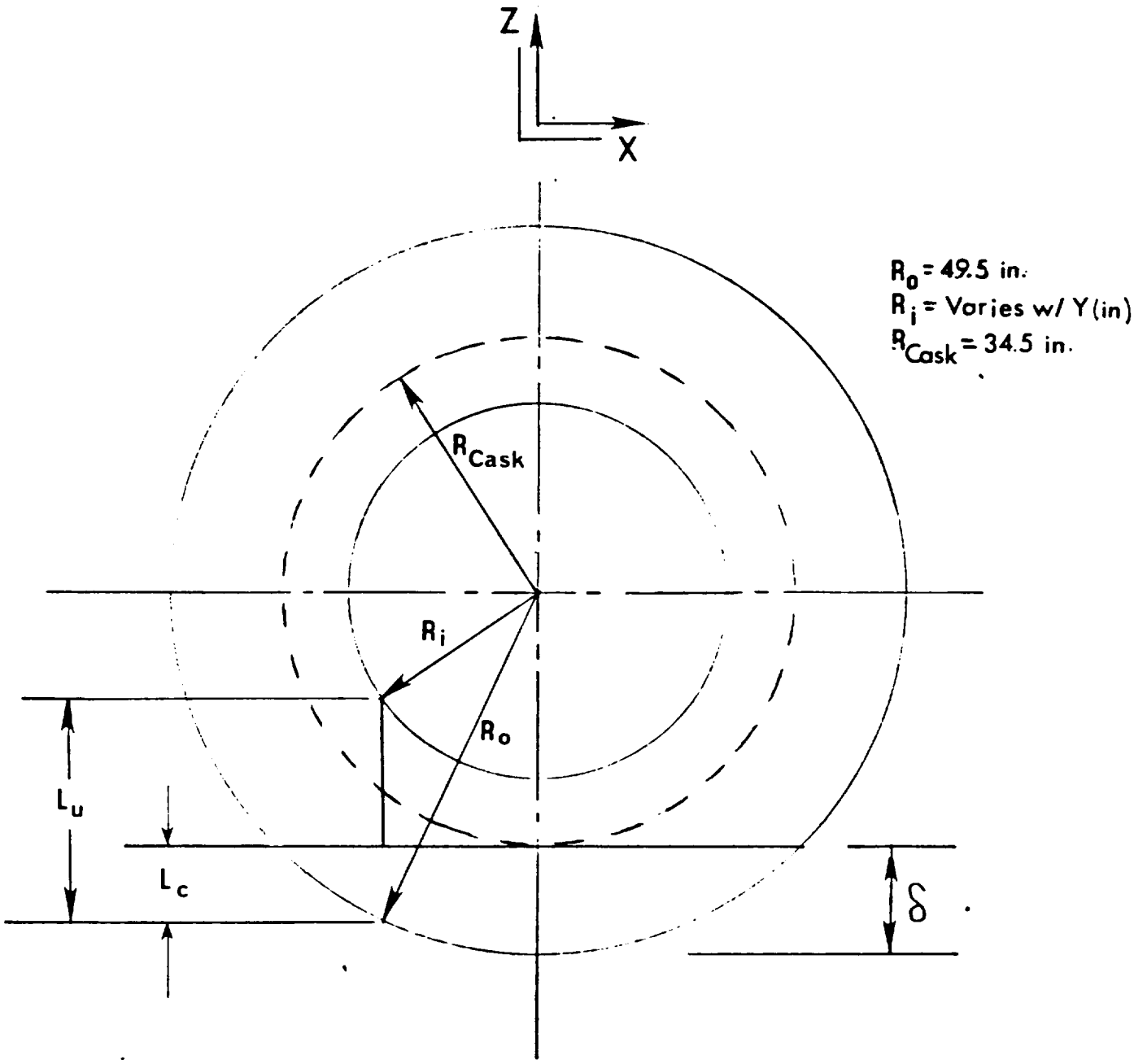

Figure 2.10.23

2.10.6.3.1 Calculation of Original and Crushed Lengths

Below is a typical crush foam plane:

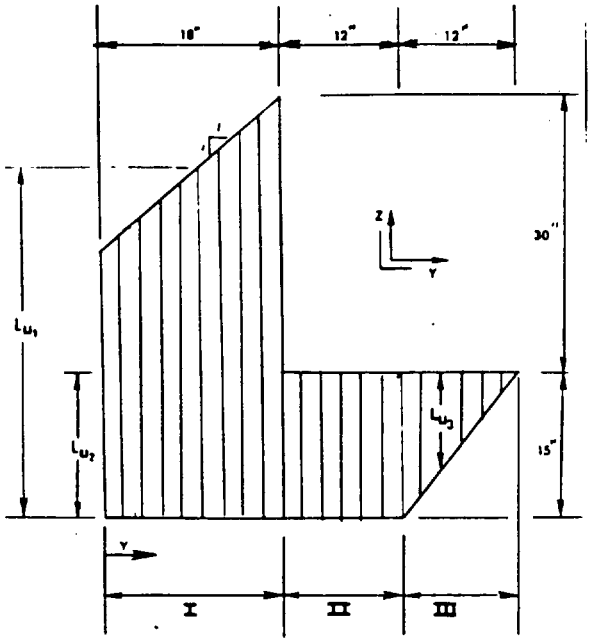

Figure 2.10.23a

The plane can be broken down into three separate regions. In all three regions the uncrushed length of a foam section varies with its location as does the length of foam section crushed.

For Region I

$$L_{u1} = (R_o^2 - x_1^2)^{\frac{1}{2}} - (R_i^2 - x_1^2)^{\frac{1}{2}} \text{ (in)} \qquad \text{for } x_1 < R_i$$

$$L_{u1} = [(R_o^2 - x_1^2)^{\frac{1}{2}}]\ 2 \text{ (in)} \qquad \text{for } x_1 > R_i$$

Where: $R_i = 49.5 - (27.0 + y_1)$ (in)

$R_o = 49.5$ (constant) (in)

and x_1 and y_1 known quantities (0,2,4,6...)

$L_c = (R_o^2 - x_1^2)^{\frac{1}{2}} - (R_o - \delta)$

For Region II

$L_{u2} = (R_o{}^2 - x_2^2)^{\frac{1}{2}} - (R_i - x_2^2)^{\frac{1}{2}}$

Where: $R_i = 34.5$ (constant) (in)

$R_o = 49.5$ (constant) (in)

and x_2 is a known quantity (0,2,4,6...)

$L_{c2} = (R_o{}^2 - x_2{}^2)^{\frac{1}{2}} - (R_o - \delta)$

For Region III

$L_{u3} = (R_o{}^2 - x_3{}^2)^{\frac{1}{2}} - (R_i{}^2 - x_3{}^2)^{\frac{1}{2}}$

where: $R_i = 34.5$ (constant) (in)

$R_o = 49.5 - (y_3 - 30.0)(15.0/12.0)$ (in)

and x_3 and y_3 are a known quantity (0,2,4,6...)

$L_{c3} = (R_o{}^2 - x_3{}^2)^{\frac{1}{2}} - (R_o - \delta)$

The actual segment lengths for each of the four corners are calculated by the formulas listed above, and the average value is used as the section length. The calculations of the section lengths can be found in Section 2.10 Appendix B. The calculations were performed using a computer programmed to perform the calculations listed above. Two cases were considered. The maximum g force applied to the cask body was calculated by taking credit for the entire area of foam contacting the ground at impact (Regions I, II, and III) and using the maximum mechanical properties of the foam. The maximum crush depth of the foam was calculated by only taking credit for the foam which is directly below, or backed by,

the cask body (Regions II and III) and using the minimum mechanical properties of the foam.

2.10.6.3.3 Energy Absorption of Foam

The energy generated from the 30 foot drop is found by:

(PE) = U = mgh = (50,000 lbs)(30 ft) (12 in-ft) = 1.80×10^7 in-lbs.

Through several iterations, the maximum foam deflection was found to be approximately 12.1 inches.

As 15.01 inches of foam are available to be crushed it can be concluded that:

Factor of Safety > 1.0

2.10.6.3.4 Calculation of Inertia Load for 12.1 inch Deflection

The maximum inertia load for the 12.1 inch deflection was determined by summing the maximum stress for each section times the section area. The results can be found in Section 2.10 Appendix B. For the 12.1 inch deflection:

Maximum Inertia (G) Load = 106.0

This load is applied to the cask components to satisfy the requirements of 10CFR71 Subpart F.

2.10.6.3.5 Side Wall Bending

The side wall bending stresses are determined by assuming the side walls are simply supported at the cask ends.

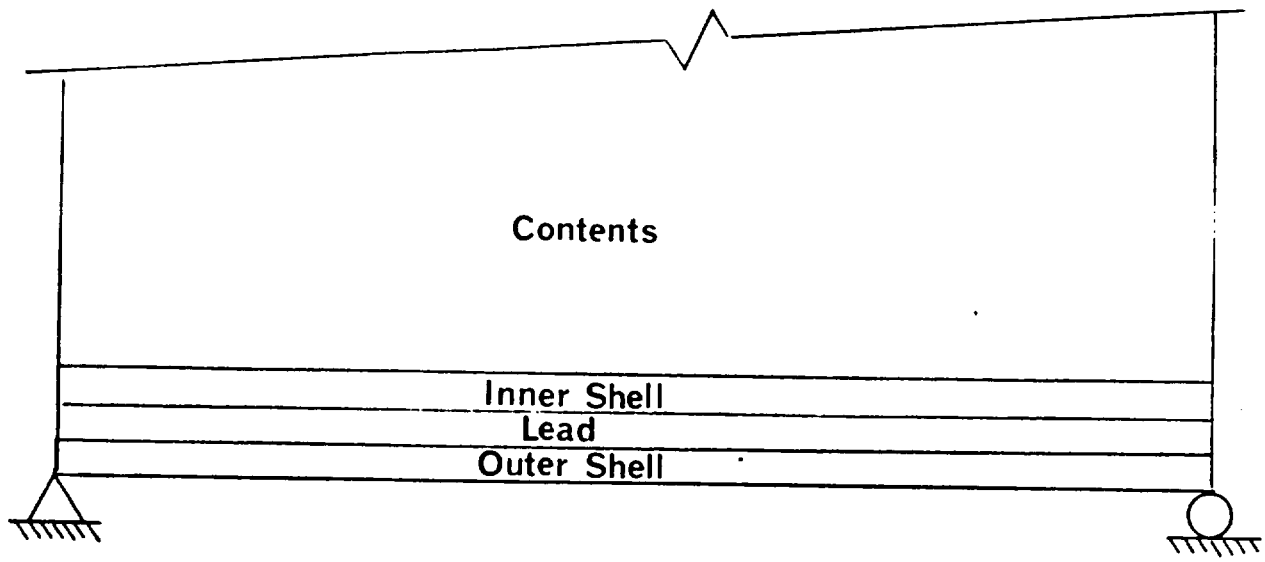

Figure 2.10.24

Weight of Inner Shell = (47 in) π $(27.375^2-27.0^2)$(490 lb/1728 in^3) = 854 lbs

Weight of Outer Shell = (47 in) (π) $(32.125^2-31.125^2)$(490 lb/1728 in^3) = 2648 lbs

Weight of Lead = 47 in (π) $(31.125^2-27.375^2)$(710 lb/1728 in^3) = 13,309 lbs

Weight of Contents = 8195 lbs

Total Unsupported Wt = 25,006 lbs

Force = (25006 lbs) (106 g's) = 2.65×10^6 lbs

Reactions = F/2 = 1.33×10^6 lbs

$$\text{Bending Stress} = \frac{(1.33\text{x}10^6)\ \left(\frac{74.5\text{ in}}{2}\right)}{Z}$$

$$Z = \frac{\pi(R_o^{\,4}-R_i^{\,4})}{4(32.125)} = 3094\ \text{in}^3$$

σ = 16,012 psi

$$\underline{\text{Factor of Safety}} = \frac{30{,}000 \text{ psi}}{16{,}012 \text{ psi}} = 1.87 \text{ For ASTM A516 GR55}$$

2.10.7 Puncture

The 3-82B cask outer steel shell has been designed with sufficient steel thickness (1.0 in) to prevent puncture under a hypothetical accident of a 40 inch free drop of the cask onto a 6 inch diameter bar.

Utilizing research performed at the Franklin Institute the required thickness of the steel shell is determined by the expession:

$$t = \left(\frac{W}{S}\right)^{0.71} \qquad \text{(Ref. 2-1 page 17)}$$

Where:

t = shell thickness, in
W = cask weight = 50,000 lbs
S = ultimate tensile strength of the outer shell = 55,000 psi

$$t = \left(\frac{50{,}000 \text{ lbs}}{55{,}000 \text{ psi}}\right)^{0.71} = 0.93 \text{ inch}$$

$$1.0 \text{ in} > 0.93 \text{ in}$$

Therefore, since the outer steel shell is thicker than the required shell thickness, puncture will not occur.

A puncture impact on the impact skirts would result in their damage. However, this condition will not be further examined since the puncture test follows the 30 foot free drop test. The impact skirts are only required for the cask to withstand the free drop test undamaged and are not required for the cask to withstand any subsequent hypothetical accident conditions.

2.10.8 Penetration

The effect of the dropping a 1-1/4 inch diameter, 13 pound steel bar with a hemispherical end 40 inches vertically onto the surface of the cask is analyzed

similar to the puncture test (Section 2.10.7). For the puncture test the energy absorbed per unit area is:

$$U'' = \frac{KE}{A} = \frac{(50{,}000\#)(40\ \text{in})}{.785\ (6\ \text{in})^2} = 70{,}771\ \frac{\text{lb-in}}{\text{in}^2}$$

Similarly for the penetration test:

$$U'' = \frac{KE}{A} = \frac{13\#\ (40\ \text{in})}{.785\ (1.25\ \text{in})^2} = 425\ \frac{\text{lb-in}}{\text{in}^2}$$

Since $70{,}771\ \frac{\text{in-lb}}{\text{in}^2} >> 425\ \frac{\text{lb-in}}{\text{in}^2}$

The penetration of the outer shell or any portion of the cask will not result.

References

2-1 Shappert, L.B., Cask Designers Guide, ORNL-NSIC-68, February 1970.

2-2 Roark, R.J., Formulas for Stress and Strain, McGraw-Hill Book Co., New York, 1965.

2-3 Timoshenko, S., Theory of Plates and Shells, McGraw-Hill Book Co., New York, 1959.

2-4 Bijloard, P.R., Stress From Radial Loads and External Moments in Cylindrical Pressure Vessels, ASME, 1960.

2.10 Appendix A

Corner Drop Analysis - Computer

The analysis performed by the IBM-PC computer was based on the method of analysis of Section I of the main text. The computer was used as an aid in performing the repetative calculations required by the analysis method. A description of the analysis is given below.

The first matrix lists the crushed lengths of all listed foam section for the case of maximum crush, δ = 19.1 in. Calculation of these values is performed by using the equations of Section 2.10.6.1.

The second matrix calculates the average crushed length for each section, i.e,:

$$L_{(CD45)} = (L_{(C4)} + L_{(C5)} + L_{(D4)} + L_{(D5)})/4$$

The next two matrices determine the original length of the corresponding sections.

The fifth matrix determines the percent crush for each section by dividing the original length by the crushed length.

The following five matrices duplicate these calculations for the deflection required for the impact limiter to absorb the required energy (from trial and error).

The next matrix contains input data from the derived energy absorption curve. This information can be found in the main text.

The values of the energy absorption/in^3 matrix are multiplied by the foam volume of each section (2 in x 2 in x original length), to find the total absorbed energy per foam section. These values are summed and multiplied by 2 (symmetric contact surface) to find the total absorbed energy of the skirts.

In order to find the corresponding inertia load, the stresses corresponding to the % crush of the section were first put into a matrix. Next, the matrix values were summed and multiplied by the section area, doubled for symmetry and divided by the total package weight.

$$\text{Inertia Load} = \frac{\Sigma\sigma(A)(2)}{wt} = \frac{\Sigma\sigma(4\ in^2)(2)}{50{,}000\ lbs}$$

TITLE: 3-82B CORNER IMPACT ANALYSIS
PURPOSE: TO DETERMINE THE ADEQUACY OF THE 3-82B IMPACT LIMITERS TO ABSORB THE ENERGY GENERATED FROM A 30-FOOT DROP.
PROCEDURE: THE CONTACT SURFACE OF THE IMPACT LIMITER IS BROKEN UP INTO 2"x2" SQUARE SECTIONS NEXT, THE TOTAL CRUSHED DISTANCE IS DETERMINED FOR EACH CORNER POINT (NODE) OF THE SQUARE AND THE FOUR LENGTHS ARE AVERAGED TO FIND THE APPROXIMATE EQUIVILENT LENGTH. THIS LENGTH IS MULTIPLIED BY THE AREA TO DETERMINE THE CRUSHED VOLUME. THE CRUSHED VOLUME IS DIVIDED BY THE ORIGINAL VOLUME (DETERMINED IN A MANNER SIMILAR TO THE CRUSHED VOLUME) TO FIND THE VOLUMETRIC STRAIN ON THE FOAM. THIS STRAIN CAN BE USED IN CONJUNCTION WITH THE FOAM MANUFACTURES STRESS-STRAIN CURVE TO DETERMINE THE ABSORBED ENERGY OF THE FOAM.

CASE II-MAXIMUM CRUSH
LAST-A-FOAM FR-3718.25

MATRIX FOR THE CRUSHED LENGTHS OF THE FOAM (SEE STD-02-058) 19.1 IN DEFLECTION

Y	X	A	B	C	D	E	F	G	H	J	K	L	M	N	P	Q	R	S	T
		0.0	2.0	4.0	6.0	8.0	10.0	12.0	14.0	16.0	18.0	20.0	22.0	24.0	26.0	28.0	30.0	32.0	34.0
0	0	0.0	0.0	0.0	0.0	0.0	0.0	0.0	0.0	0.0	0.0	0.0	0.0	0.0	0.0	0.0	0.0	0.0	0.0
1	2	2.0	2.0	2.0	2.0	2.0	2.0	2.0	2.0	2.0	2.0	2.0	2.0	2.0	2.0	2.0	2.0	2.0	23.9
2	4	4.0	4.0	4.0	4.0	4.0	4.0	4.0	4.0	4.0	4.0	4.0	4.0	4.0	4.0	4.0	4.0	23.7	21.9
3	6	6.0	6.0	6.0	6.0	6.0	6.0	6.0	6.0	6.0	6.0	6.0	6.0	6.0	6.0	6.0	6.0	21.7	19.9
4	8	8.0	8.0	8.0	8.0	8.0	8.0	8.0	8.0	8.0	8.0	8.0	8.0	8.0	8.0	8.0	8.0	19.7	17.9
5	10	10.0	10.0	10.0	10.0	10.0	10.0	10.0	10.0	10.0	10.0	10.0	10.0	10.0	10.0	10.0	19.4	17.7	15.9
6	12	12.0	12.0	12.0	12.0	12.0	12.0	12.0	12.0	12.0	12.0	12.0	12.0	12.0	12.0	18.9	17.4	15.7	13.9
7	14	14.0	14.0	14.0	14.0	14.0	14.0	14.0	14.0	14.0	14.0	14.0	14.0	14.0	18.2	16.9	15.4	13.7	11.9
8	16	16.0	16.0	16.0	16.0	16.0	16.0	16.0	16.0	16.0	16.0	16.0	18.4	17.4	16.2	14.9	13.4	11.7	9.9
9	18	18.0	18.0	18.0	18.0	18.0	18.0	18.0	19.3	18.7	18.1	17.3	16.4	15.4	14.2	12.9	11.4	9.7	7.9
10	20	18.2	18.2	18.2	18.2	18.1	18.0	17.7	17.3	16.7	16.1	15.3	14.4	13.4	12.2	10.9	9.4	7.7	5.9
11	22	16.2	16.2	16.2	16.2	16.1	16.0	15.7	15.3	14.7	14.1	13.3	12.4	11.4	10.2	8.9	7.4	5.7	3.9
12	24	14.2	14.2	14.2	14.2	14.1	14.0	13.7	13.3	12.7	12.1	11.3	10.4	9.4	8.2	6.9	5.4	3.7	1.9
13	26	12.2	12.2	12.2	12.2	12.1	12.0	11.7	11.3	10.7	10.1	9.3	8.4	7.4	6.2	4.9	3.4	1.7	
14	28	10.2	10.2	10.2	10.2	10.1	10.0	9.7	9.3	8.7	8.1	7.3	6.4	5.4	4.2	2.9	1.4		
15	30	8.2	8.2	8.2	8.2	8.1	8.0	7.7	7.3	6.7	6.1	5.3	4.4	3.4	2.2	0.9			
16	32	6.2	6.2	6.2	6.2	6.1	6.0	5.7	5.3	4.7	4.1	3.3	2.4	1.4	0.2				
17	34	4.2	4.2	4.2	4.2	4.1	4.0	3.7	3.3	2.7	2.1	1.3	0.4						
18	36	2.2	2.2	2.2	2.2	2.1	2.0	1.7	1.3	0.7	0.1								
19	38	0.2	0.2	0.2	0.2	0.1													

CALCULATION FOR THE AVE. CRUSHED LENGTH OF THE RECT. SECT. FOR 19.1in DEFL.

	AB	BC	CD	DE	EF	FG	GH	HJ	JK	KL	LM	MN	NP	PQ	QR	RS	ST
01	1.0	1.0	1.0	1.0	1.0	1.0	1.0	1.0	1.0	1.0	1.0	1.0	1.0	1.0	1.0	1.0	6.5
12	3.0	3.0	3.0	3.0	3.0	3.0	3.0	3.0	3.0	3.0	3.0	3.0	3.0	3.0	3.0	7.9	17.9
23	5.0	5.0	5.0	5.0	5.0	5.0	5.0	5.0	5.0	5.0	5.0	5.0	5.0	5.0	5.0	13.9	21.8
34	7.0	7.0	7.0	7.0	7.0	7.0	7.0	7.0	7.0	7.0	7.0	7.0	7.0	7.0	7.0	13.9	19.8
45	9.0	9.0	9.0	9.0	9.0	9.0	9.0	9.0	9.0	9.0	9.0	9.0	9.0	9.0	11.4	16.2	17.8
56	11.0	11.0	11.0	11.0	11.0	11.0	11.0	11.0	11.0	11.0	11.0	11.0	11.0	12.7	16.4	17.6	15.8
67	13.0	13.0	13.0	13.0	13.0	13.0	13.0	13.0	13.0	13.0	13.0	13.0	14.1	16.5	17.1	15.6	13.8
~~78~~	~~15.0~~	~~15.0~~	~~15.0~~	~~15.0~~	~~15.0~~	~~15.0~~	~~15.0~~	~~15.0~~	~~15.0~~	~~15.0~~	~~15.6~~	~~16.0~~	~~16.5~~	~~16.6~~	~~15.1~~	~~13.6~~	~~11.8~~
89	17.0	17.0	17.0	17.0	17.0	17.0	17.3	17.5	17.2	16.9	17.0	16.9	15.8	14.6	13.1	11.6	9.8
910	18.1	18.1	18.1	18.1	18.0	17.9	18.0	18.0	17.4	16.7	15.9	14.9	13.8	12.6	11.1	9.6	7.8
1011	17.2	17.2	17.2	17.2	17.0	16.8	16.5	16.0	15.4	14.7	13.9	12.9	11.8	10.6	9.1	7.6	5.8
1112	15.2	15.2	15.2	15.2	15.0	14.8	14.5	14.0	13.4	12.7	11.9	10.9	9.8	8.6	7.1	5.6	3.8
1213	13.2	13.2	13.2	13.2	13.0	12.8	12.5	12.0	11.4	10.7	9.9	8.9	7.8	6.6	5.1	3.6	1.9
1314	11.2	11.2	11.2	11.2	11.0	10.8	10.5	10.0	9.4	8.7	7.9	6.9	5.8	4.6	3.1	1.6	0.4
1415	9.2	9.2	9.2	9.2	9.0	8.8	8.5	8.0	7.4	6.7	5.9	4.9	3.8	2.6	1.3	0.4	0.0
1516	7.2	7.2	7.2	7.2	7.0	6.8	6.5	6.0	5.4	4.7	3.9	2.9	1.8	0.8	0.2	0.0	0.0
1617	5.2	5.2	5.2	5.2	5.0	4.8	4.5	4.0	3.4	2.7	1.9	1.1	0.4	0.1	0.0	0.0	0.0
1718	3.2	3.2	3.2	3.2	3.0	2.8	2.5	2.0	1.4	0.9	0.4	0.1	0.0	0.0	0.0	0.0	0.0
1819	1.2	1.2	1.2	1.2	1.1	0.9	0.7	0.5	0.2	.0	0.0	0.0	0.0	0.0	0.0	0.0	0.0

INPUT VALUES OF THE ORIG. LENGTH OF THE FOAM SECTIONS

Y/X		A	B	C	D	E	F	G	H	J	K	L	M	N	P	Q	R	S	T
		0.0	2.0	4.0	6.0	8.0	10.0	12.0	14.0	16.0	18.0	20.0	22.0	24.0	26.0	28.0	30.0	32.0	34.0
0	0.0	25.5	25.5	25.5	25.5	25.5	25.5	25.5	25.5	25.5	25.5	25.5	25.5	25.5	25.5	25.5	25.5	25.5	25.5
1	2.0	25.5	25.5	25.5	25.5	25.5	25.5	25.5	25.5	25.5	25.5	25.5	25.5	25.5	25.5	25.5	25.5	25.5	40.5
2	4.0	25.5	25.5	25.5	25.5	25.5	25.5	25.5	25.5	25.5	25.5	25.5	25.5	25.5	25.5	25.5	25.5	39.0	34.5
3	6.0	25.5	25.5	25.5	25.5	25.5	25.5	25.5	25.5	25.5	25.5	25.5	25.5	25.5	25.5	25.5	25.5	35.0	32.5
4	8.0	25.5	25.5	25.5	25.5	25.5	25.5	25.5	25.5	25.5	25.5	25.5	25.5	25.5	25.5	25.5	25.5	31.0	43.8
5	10.0	25.5	25.5	25.5	25.5	25.5	25.5	25.5	25.5	25.5	25.5	25.5	25.5	25.5	25.5	25.5	29.3	35.2	42.6
6	12.0	25.5	25.5	25.5	25.5	25.5	25.5	25.5	25.5	25.5	25.5	25.5	25.5	25.5	25.5	27.4	31.6	35.2	42.6
7	14.0	25.5	25.5	25.5	25.5	25.5	25.5	25.5	25.5	25.5	25.5	25.5	25.5	25.5	27.5	29.2	31.6	35.2	42.6
8	16.0	25.5	25.5	25.5	25.5	25.5	25.5	25.5	25.5	25.5	25.5	25.5	25.1	26.2	27.5	29.2	31.6	35.2	42.6
9	18.0	25.5	25.5	25.5	25.5	25.5	25.5	25.5	24.8	23.9	23.6	24.3	25.1	26.2	27.5	29.2	31.6	35.2	42.6
10	20.0	23.6	23.6	23.4	23.1	22.7	22.2	22.2	22.6	23.0	23.6	24.3	25.1	26.2	27.5	29.2	31.6	35.2	42.6
11	22.0	21.2	21.2	21.3	21.4	21.6	21.9	22.2	22.6	23.0	23.6	24.3	25.1	26.2	27.5	29.2	31.6	35.2	42.6
12	24.0	21.2	21.2	21.3	21.4	21.6	21.9	22.2	22.6	23.0	23.6	24.3	25.1	26.2	27.5	29.2	31.6	35.2	42.6
13	26.0	21.2	21.2	21.3	21.4	21.6	21.9	22.2	22.6	23.0	23.6	24.3	25.1	26.2	27.5	29.2	31.6	35.2	42.6
14	28.0	21.2	21.2	21.3	21.4	21.6	21.9	22.2	22.6	23.0	23.6	24.3	25.1	26.2	27.5	29.2	31.6	35.2	42.6
15	30.0	21.2	21.2	21.3	21.4	21.6	21.9	22.2	22.6	23.0	23.6	24.3	25.1	26.2	27.5	29.2	31.6	35.2	42.6
16	32.0	21.2	21.2	21.3	21.4	21.6	21.9	22.2	22.6	23.0	23.6	24.3	25.1	26.2	27.5	29.2	31.6	35.2	42.6
17	34.0	21.2	21.2	21.3	21.4	21.6	21.9	22.2	22.6	23.0	23.6	24.3	25.1	26.2	27.5	29.2	31.6	35.2	42.6
18	36.0	21.2	21.2	21.3	21.4	21.6	21.9	22.2	22.6	23.0	23.6	24.3	25.1	26.2	27.5	29.2	31.6	35.2	42.6
19	38.0	21.2	21.2	21.3	21.4	21.6	21.9	22.2	22.6	23.0	23.6	24.3	25.1	26.2	27.5	29.2	31.6	35.2	42.6

CALCULATED DATA ON THE ORIGINAL LENGTH OF FOAM SECTION

	AB	BC	CD	DE	EF	FG	GH	HJ	JK	KL	LM	MN	NP	PQ	QR	RS	ST
01	25.5	25.5	25.5	25.5	25.5	25.5	25.5	25.5	25.5	25.5	25.5	25.5	25.5	25.5	25.5	25.5	29.2
12	25.5	25.5	25.5	25.5	25.5	25.5	25.5	25.5	25.5	25.5	25.5	25.5	25.5	25.5	25.5	28.9	35.4
23	25.5	25.5	25.5	25.5	25.5	25.5	25.5	25.5	25.5	25.5	25.5	25.5	25.5	25.5	25.5	31.3	35.8
34	25.5	25.5	25.5	25.5	25.5	25.5	25.5	25.5	25.5	25.5	25.5	25.5	25.5	25.5	25.5	29.3	35.6
45	25.5	25.5	25.5	25.5	25.5	25.5	25.5	25.5	25.5	25.5	25.5	25.5	25.5	25.5	26.4	30.2	38.2
56	25.5	25.5	25.5	25.5	25.5	25.5	25.5	25.5	25.5	25.5	25.5	25.5	25.5	25.9	28.4	32.8	38.9
67	25.5	25.5	25.5	25.5	25.5	25.5	25.5	25.5	25.5	25.5	25.5	25.5	26.0	27.4	29.9	33.4	38.9
78	25.5	25.5	25.5	25.5	25.5	25.5	25.5	25.5	25.5	25.5	25.4	25.6	26.7	28.4	30.4	33.4	38.9
89	25.5	25.5	25.5	25.5	25.5	25.5	25.3	24.9	24.6	24.7	25.0	25.7	26.8	28.4	30.4	33.4	38.9
910	24.5	24.5	24.4	24.2	24.0	23.8	23.7	23.6	23.5	23.9	24.7	25.7	26.8	28.4	30.4	33.4	38.9
1011	22.4	22.4	22.3	22.2	22.1	22.1	22.4	22.8	23.3	23.9	24.7	25.7	26.8	28.4	30.4	33.4	38.9
1112	21.2	21.3	21.4	21.5	21.7	22.0	22.4	22.8	23.3	23.9	24.7	25.7	26.8	28.4	30.4	33.4	38.9
1213	21.2	21.3	21.4	21.5	21.7	22.0	22.4	22.8	23.3	23.9	24.7	25.7	26.8	28.4	30.4	33.4	38.9
1314	21.2	21.3	21.4	21.5	21.7	22.0	22.4	22.8	23.3	23.9	24.7	25.7	26.8	28.4	30.4	33.4	38.9
1415	21.2	21.3	21.4	21.5	21.7	22.0	22.4	22.8	23.3	23.9	24.7	25.7	26.8	28.4	30.4	33.4	38.9
1516	21.2	21.3	21.4	21.5	21.7	22.0	22.4	22.8	23.3	23.9	24.7	25.7	26.8	28.4	30.4	33.4	38.9
1617	21.2	21.3	21.4	21.5	21.7	22.0	22.4	22.8	23.3	23.9	24.7	25.7	26.8	28.4	30.4	33.4	38.9
1718	21.2	21.3	21.4	21.5	21.7	22.0	22.4	22.8	23.3	23.9	24.7	25.7	26.8	28.4	30.4	33.4	38.9
1819	21.2	21.3	21.4	21.5	21.7	22.0	22.4	22.8	23.3	23.9	24.7	25.7	26.8	28.4	30.4	33.4	38.9

PERCENT CRUSH FOR 19.1in DEFLECTION

	AB	BC	CD	DE	EF	FG	GH	HJ	JK	KL	LM	MN	NP	PQ	QR	RS	ST
01	4%	4%	4%	4%	4%	4%	4%	4%	4%	4%	4%	4%	4%	4%	4%	4%	22%
12	12%	12%	12%	12%	12%	12%	12%	12%	12%	12%	12%	12%	12%	12%	12%	28%	51%
23	20%	20%	20%	20%	20%	20%	20%	20%	20%	20%	20%	20%	20%	20%	20%	44%	61%
34	27%	27%	27%	27%	27%	27%	27%	27%	27%	27%	27%	27%	27%	27%	27%	47%	56%
45	35%	35%	35%	35%	35%	35%	35%	35%	35%	35%	35%	35%	35%	35%	43%	54%	47%
56	43%	43%	43%	43%	43%	43%	43%	43%	43%	43%	43%	43%	43%	49%	58%	54%	41%
67	51%	51%	51%	51%	51%	51%	51%	51%	51%	51%	51%	51%	54%	60%	57%	47%	36%
78	59%	59%	59%	59%	59%	59%	59%	59%	59%	59%	62%	62%	62%	58%	50%	41%	30%
89	67%	67%	67%	67%	67%	67%	68%	70%	70%	68%	68%	66%	59%	51%	43%	35%	25%
910	74%	74%	74%	75%	75%	75%	76%	76%	74%	70%	64%	58%	51%	44%	37%	29%	20%
1011	77%	77%	77%	77%	77%	76%	74%	70%	66%	61%	56%	50%	44%	37%	30%	23%	15%
1112	72%	71%	71%	70%	69%	67%	65%	61%	58%	53%	48%	43%	37%	30%	24%	17%	10%
1213	62%	62%	62%	61%	60%	58%	56%	53%	49%	45%	40%	35%	29%	23%	17%	11%	5%
1314	53%	53%	52%	52%	51%	49%	47%	44%	40%	36%	32%	27%	22%	16%	10%	5%	1%
1415	43%	43%	43%	43%	42%	40%	38%	35%	32%	28%	24%	19%	14%	9%	4%	1%	0%
1516	34%	34%	34%	33%	32%	31%	29%	26%	23%	20%	16%	11%	7%	3%	1%	0%	0%
1617	24%	24%	24%	24%	23%	22%	20%	18%	15%	11%	8%	4%	1%	0%	0%	0%	0%
1718	15%	15%	15%	15%	14%	13%	11%	9%	6%	4%	2%	0%	0%	0%	0%	0%	0%
1819	6%	6%	6%	5%	5%	4%	3%	2%	1%	0%	0%	0%	0%	0%	0%	0%	0%

MATRIX FOR THE CRUSHED LENGTH OF FOAM - 18.00 in DEFLECTION

	A	B	C	D	E	F	G	H	J	K	L	M	N	P	Q	R	S	T
0	-1.1	-1.1	-1.1	-1.1	-1.1	-1.1	-1.1	-1.1	-1.1	-1.1	-1.1	-1.1	-1.1	-1.1	-1.1	-1.1	-1.1	-1.1
1	0.9	0.9	0.9	0.9	0.9	0.9	0.9	0.9	0.9	0.9	0.9	0.9	0.9	0.9	0.9	0.9	0.9	22.6
2	2.9	2.9	2.9	2.9	2.9	2.9	2.9	2.9	2.9	2.9	2.9	2.9	2.9	2.9	2.9	2.9	22.6	20.8
3	4.9	4.9	4.9	4.9	4.9	4.9	4.9	4.9	4.9	4.9	4.9	4.9	4.9	4.9	4.9	4.9	20.6	18.8
4	6.9	6.9	6.9	6.9	6.9	6.9	6.9	6.9	6.9	6.9	6.9	6.9	6.9	6.9	6.9	6.9	18.6	16.8
5	8.9	8.9	8.9	8.9	8.9	8.9	8.9	8.9	8.9	8.9	8.9	8.9	8.9	8.9	8.9	18.3	16.6	14.8
6	10.9	10.9	10.9	10.9	10.9	10.9	10.9	10.9	10.9	10.9	10.9	10.9	10.9	10.9	17.8	16.3	14.6	12.8
7	12.9	12.9	12.9	12.9	12.9	12.9	12.9	12.9	12.9	12.9	12.9	12.9	12.9	17.1	15.8	14.3	12.6	10.8
8	14.9	14.9	14.9	14.9	14.9	14.9	14.9	14.9	14.9	14.9	14.9	17.3	16.3	15.1	13.8	12.3	10.6	8.8
9	16.9	16.9	16.9	16.9	16.9	16.9	16.9	18.2	17.6	17.0	16.2	15.3	14.3	13.1	11.8	10.3	8.6	6.8
10	17.1	17.1	17.1	17.1	17.0	16.9	16.6	16.2	15.6	15.0	14.2	13.3	12.3	11.1	9.8	8.3	6.6	4.8
11	15.1	15.1	15.1	15.1	15.0	14.9	14.6	14.2	13.6	13.0	12.2	11.3	10.3	9.1	7.8	6.3	4.6	2.8
12	13.1	13.1	13.1	13.1	13.0	12.9	12.6	12.2	11.6	11.0	10.2	9.3	8.3	7.1	5.8	4.3	2.6	0.8
13	11.1	11.1	11.1	11.1	11.0	10.9	10.6	10.2	9.6	9.0	8.2	7.3	6.3	5.1	3.8	2.3	0.6	-1.1
14	9.1	9.1	9.1	9.1	9.0	8.9	8.6	8.2	7.6	7.0	6.2	5.3	4.3	3.1	1.8	0.3	-1.1	-1.1
15	7.1	7.1	7.1	7.1	7.0	6.9	6.6	6.2	5.6	5.0	4.2	3.3	2.3	1.1	-0.2	-1.1	-1.1	-1.1
16	5.1	5.1	5.1	5.1	5.0	4.9	4.6	4.2	3.6	3.0	2.2	1.3	0.3	-0.9	-1.1	-1.1	-1.1	-1.1
17	3.1	3.1	3.1	3.1	3.0	2.9	2.6	2.2	1.6	1.0	0.2	-0.7	-1.1	-1.1	-1.1	-1.1	-1.1	-1.1
18	1.1	1.1	1.1	1.1	1.0	0.9	0.6	0.2	-0.4	-1.0	-1.1	-1.1	-1.1	-1.1	-1.1	-1.1	-1.1	-1.1
19	-0.9	-0.9	-0.9	-0.9	-1.0	-1.1	-1.1	-1.1	-1.1	-1.1	-1.1	-1.1	-1.1	-1.1	-1.1	-1.1	-1.1	-1.1

CALCULATION FOR THE AVERAGE CRUSHED LENGTH OF FOAM SECTION 18.00 in DEFL.

	AB	BC	CD	DE	EF	FG	GH	HJ	JK	KL	LM	MN	NP	PQ	QR	RS	ST
01	-0.1	-0.1	-0.1	-0.1	-0.1	-0.1	-0.1	-0.1	-0.1	-0.1	-0.1	-0.1	-0.1	-0.1	-0.1	-0.1	5.4
12	1.9	1.9	1.9	1.9	1.9	1.9	1.9	1.9	1.9	1.9	1.9	1.9	1.9	1.9	1.9	6.8	16.8
23	3.9	3.9	3.9	3.9	3.9	3.9	3.9	3.9	3.9	3.9	3.9	3.9	3.9	3.9	3.9	12.8	20.7
34	5.9	5.9	5.9	5.9	5.9	5.9	5.9	5.9	5.9	5.9	5.9	5.9	5.9	5.9	5.9	12.8	18.7
45	7.9	7.9	7.9	7.9	7.9	7.9	7.9	7.9	7.9	7.9	7.9	7.9	7.9	7.9	10.3	15.1	16.7
56	9.9	9.9	9.9	9.9	9.9	9.9	9.9	9.9	9.9	9.9	9.9	9.9	9.9	11.6	15.3	16.5	14.7
67	11.9	11.9	11.9	11.9	11.9	11.9	11.9	11.9	11.9	11.9	11.9	11.9	13.0	15.4	16.0	14.5	12.7
78	13.9	13.9	13.9	13.9	13.9	13.9	13.9	13.9	13.9	13.9	14.5	14.9	15.4	15.5	14.0	12.5	10.7
89	15.9	15.9	15.9	15.9	15.9	15.9	16.2	16.4	16.1	15.8	15.9	15.8	14.7	13.5	12.0	10.5	8.7
910	17.0	17.0	17.0	17.0	16.9	16.8	16.9	16.9	16.3	15.6	14.8	13.8	12.7	11.5	10.0	8.5	6.7
1011	16.1	16.1	16.1	16.1	15.9	15.7	15.4	14.9	14.3	13.6	12.8	11.8	10.7	9.5	8.0	6.5	4.7
1112	14.1	14.1	14.1	14.1	13.9	13.7	13.4	12.9	12.3	11.6	10.8	9.8	8.7	7.5	6.0	4.5	2.7
1213	12.1	12.1	12.1	12.1	11.9	11.7	11.4	10.9	10.3	9.6	8.8	7.8	6.7	5.5	4.0	2.5	0.8
1314	10.1	10.1	10.1	10.1	9.9	9.7	9.4	8.9	8.3	7.6	6.8	5.8	4.7	3.5	2.0	0.5	-0.7
1415	8.1	8.1	8.1	8.1	7.9	7.7	7.4	6.9	6.3	5.6	4.8	3.8	2.7	1.5	0.2	-0.7	-1.1
1516	6.1	6.1	6.1	6.1	5.9	5.7	5.4	4.9	4.3	3.6	2.8	1.8	0.7	-0.3	-0.9	-1.1	-1.1
1617	4.1	4.1	4.1	4.1	3.9	3.7	3.4	2.9	2.3	1.6	0.8	.0	-0.7	-1.0	-1.1	-1.1	-1.1
1718	2.1	2.1	2.1	2.1	1.9	1.7	1.4	0.9	0.3	-0.2	-0.7	-1.0	-1.1	-1.1	-1.1	-1.1	-1.1
1819	0.1	0.1	0.1	0.1	.0	-0.2	-0.4	-0.6	-0.9	-1.1	-1.1	-1.1	-1.1	-1.1	-1.1	-1.1	-1.1

INPUT VALUES OF ORIGINAL FOAM LENGTHS FOR 18.00 IN DEFL.

	A	B	C	D	E	F	G	H	J	K	L	M	N	P	Q	R	S	T
0	25.5	25.5	25.5	25.5	25.5	25.5	25.5	25.5	25.5	25.5	25.5	25.5	25.5	25.5	25.5	25.5	25.5	25.5
1	25.5	25.5	25.5	25.5	25.5	25.5	25.5	25.5	25.5	25.5	25.5	25.5	25.5	25.5	25.5	25.5	25.5	40.5
2	25.5	25.5	25.5	25.5	25.5	25.5	25.5	25.5	25.5	25.5	25.5	25.5	25.5	25.5	25.5	25.5	39.0	36.5
3	25.5	25.5	25.5	25.5	25.5	25.5	25.5	25.5	25.5	25.5	25.5	25.5	25.5	25.5	25.5	25.5	35.0	32.5
4	25.5	25.5	25.5	25.5	25.5	25.5	25.5	25.5	25.5	25.5	25.5	25.5	25.5	25.5	25.5	25.5	31.0	43.8
5	25.5	25.5	25.5	25.5	25.5	25.5	25.5	25.5	25.5	25.5	25.5	25.5	25.5	25.5	25.5	29.3	35.2	42.6
6	25.5	25.5	25.5	25.5	25.5	25.5	25.5	25.5	25.5	25.5	25.5	25.5	25.5	25.5	27.4	31.6	35.2	42.6
7	25.5	25.5	25.5	25.5	25.5	25.5	25.5	25.5	25.5	25.5	25.5	25.5	25.5	27.5	29.2	31.6	35.2	42.6
8	25.5	25.5	25.5	25.5	25.5	25.5	25.5	25.5	25.5	25.5	25.5	25.1	26.2	27.5	29.2	31.6	35.2	42.6
9	25.5	25.5	25.5	25.5	25.5	25.5	25.5	24.8	23.9	23.6	24.3	25.1	26.2	27.5	29.2	31.6	35.2	42.6
10	23.6	23.6	23.4	23.1	22.7	22.2	22.2	22.6	23.0	23.6	24.3	25.1	26.2	27.5	29.2	31.6	35.2	42.6
11	21.2	21.2	21.3	21.4	21.6	21.9	22.2	22.6	23.0	23.6	24.3	25.1	26.2	27.5	29.2	31.6	35.2	42.6
12	21.2	21.2	21.3	21.4	21.6	21.9	22.2	22.6	23.0	23.6	24.3	25.1	26.2	27.5	29.2	31.6	35.2	42.6
13	21.2	21.2	21.3	21.4	21.6	21.9	22.2	22.6	23.0	23.6	24.3	25.1	26.2	27.5	29.2	31.6	35.2	42.6
14	21.2	21.2	21.3	21.4	21.6	21.9	22.2	22.6	23.0	23.6	24.3	25.1	26.2	27.5	29.2	31.6	35.2	42.6
15	21.2	21.2	21.3	21.4	21.6	21.9	22.2	22.6	23.0	23.6	24.3	25.1	26.2	27.5	29.2	31.6	35.2	42.6
16	21.2	21.2	21.3	21.4	21.6	21.9	22.2	22.6	23.0	23.6	24.3	25.1	26.2	27.5	29.2	31.6	35.2	42.6
17	21.2	21.2	21.3	21.4	21.6	21.9	22.2	22.6	23.0	23.6	24.3	25.1	26.2	27.5	29.2	31.6	35.2	42.6
18	21.2	21.2	21.3	21.4	21.6	21.9	22.2	22.6	23.0	23.6	24.3	25.1	26.2	27.5	29.2	31.6	35.2	42.6
19	21.2	21.2	21.3	21.4	21.6	21.9	22.2	22.6	23.0	23.6	24.3	25.1	26.2	27.5	29.2	31.6	35.2	42.6

CALCULATED AVERAGE ORIGINAL LENGTHS OF SECTION FOR 18.00 in DEFLECTION

	AB	BC	CD	DE	EF	FG	GH	HJ	JK	KL	LM	MN	NP	PQ	QR	RS	ST
01	25.5	25.5	25.5	25.5	25.5	25.5	25.5	25.5	25.5	25.5	25.5	25.5	25.5	25.5	25.5	25.5	29.2
12	25.5	25.5	25.5	25.5	25.5	25.5	25.5	25.5	25.5	25.5	25.5	25.5	25.5	25.5	25.5	28.9	35.4
23	25.5	25.5	25.5	25.5	25.5	25.5	25.5	25.5	25.5	25.5	25.5	25.5	25.5	25.5	25.5	31.3	35.8
34	25.5	25.5	25.5	25.5	25.5	25.5	25.5	25.5	25.5	25.5	25.5	25.5	25.5	25.5	25.5	29.3	35.6
45	25.5	25.5	25.5	25.5	25.5	25.5	25.5	25.5	25.5	25.5	25.5	25.5	25.5	25.5	26.4	30.2	38.2
56	25.5	25.5	25.5	25.5	25.5	25.5	25.5	25.5	25.5	25.5	25.5	25.5	25.5	25.9	28.4	32.8	38.9
67	25.5	25.5	25.5	25.5	25.5	25.5	25.5	25.5	25.5	25.5	25.5	25.5	26.0	27.4	29.9	33.4	38.9
78	25.5	25.5	25.5	25.5	25.5	25.5	25.5	25.5	25.5	25.5	25.4	25.6	26.7	28.4	30.4	33.4	38.9
89	25.5	25.5	25.5	25.5	25.5	25.5	25.3	24.9	24.6	24.7	25.0	25.7	26.8	28.4	30.4	33.4	38.9
910	24.5	24.5	24.4	24.2	24.0	23.8	23.7	23.6	23.5	23.9	24.7	25.7	26.8	28.4	30.4	33.4	38.9
1011	22.4	22.4	22.3	22.2	22.1	22.1	22.4	22.8	23.3	23.9	24.7	25.7	26.8	28.4	30.4	33.4	38.9
1112	21.2	21.3	21.4	21.5	21.7	22.0	22.4	22.8	23.3	23.9	24.7	25.7	26.8	28.4	30.4	33.4	38.9
1213	21.2	21.3	21.4	21.5	21.7	22.0	22.4	22.8	23.3	23.9	24.7	25.7	26.8	28.4	30.4	33.4	38.9
1314	21.2	21.3	21.4	21.5	21.7	22.0	22.4	22.8	23.3	23.9	24.7	25.7	26.8	28.4	30.4	33.4	38.9
1415	21.2	21.3	21.4	21.5	21.7	22.0	22.4	22.8	23.3	23.9	24.7	25.7	26.8	28.4	30.4	33.4	38.9
1516	21.2	21.3	21.4	21.5	21.7	22.0	22.4	22.8	23.3	23.9	24.7	25.7	26.8	28.4	30.4	33.4	38.9
1617	21.2	21.3	21.4	21.5	21.7	22.0	22.4	22.8	23.3	23.9	24.7	25.7	26.8	28.4	30.4	33.4	38.9
1718	21.2	21.3	21.4	21.5	21.7	22.0	22.4	22.8	23.3	23.9	24.7	25.7	26.8	28.4	30.4	33.4	38.9
1819	21.2	21.3	21.4	21.5	21.7	22.0	22.4	22.8	23.3	23.9	24.7	25.7	26.8	28.4	30.4	33.4	38.9

PERCENT CRUSH FOR SECTION 18.00 in DEFLECTION

	AB	BC	CD	DE	EF	FG	GH	HJ	JK	KL	LM	MN	NP	PQ	QR	RS	ST
01	0%	0%	0%	0%	0%	0%	0%	0%	0%	0%	0%	0%	0%	0%	0%	0%	18%
12	7%	7%	7%	7%	7%	7%	7%	7%	7%	7%	7%	7%	7%	7%	7%	24%	47%
23	15%	15%	15%	15%	15%	15%	15%	15%	15%	15%	15%	15%	15%	15%	15%	41%	58%
34	23%	23%	23%	23%	23%	23%	23%	23%	23%	23%	23%	23%	23%	23%	23%	44%	53%
45	31%	31%	31%	31%	31%	31%	31%	31%	31%	31%	31%	31%	31%	31%	39%	50%	44%
56	39%	39%	39%	39%	39%	39%	39%	39%	39%	39%	39%	39%	39%	45%	54%	50%	38%
67	47%	47%	47%	47%	47%	47%	47%	47%	47%	47%	47%	47%	50%	56%	54%	43%	33%
78	55%	55%	55%	55%	55%	55%	55%	55%	55%	55%	57%	58%	58%	54%	46%	37%	28%
89	62%	62%	62%	62%	62%	62%	64%	66%	65%	64%	64%	62%	55%	47%	40%	31%	22%
910	69%	69%	70%	70%	71%	71%	71%	72%	69%	65%	60%	54%	47%	40%	33%	25%	17%
1011	72%	72%	72%	72%	72%	71%	69%	65%	61%	57%	52%	46%	40%	33%	26%	19%	12%
1112	66%	66%	66%	65%	64%	62%	60%	57%	53%	49%	44%	38%	32%	26%	20%	13%	7%
1213	57%	57%	57%	56%	55%	53%	51%	48%	44%	40%	36%	30%	25%	19%	13%	7%	2%
1314	48%	47%	47%	47%	46%	44%	42%	39%	36%	32%	27%	23%	18%	12%	7%	2%	-2%
1415	38%	38%	38%	37%	37%	35%	33%	30%	27%	23%	19%	15%	10%	5%	1%	-2%	-3%
1516	29%	29%	28%	28%	27%	26%	24%	22%	19%	15%	11%	7%	3%	-1%	-3%	-3%	-3%
1617	19%	19%	19%	19%	18%	17%	15%	13%	10%	7%	3%	0%	-3%	-4%	-4%	-3%	-3%
1718	10%	10%	10%	10%	9%	8%	6%	4%	1%	-1%	-3%	-4%	-4%	-4%	-4%	-3%	-3%
1819	0%	0%	0%	0%	0%	-1%	-2%	-3%	-4%	-4%	-4%	-4%	-4%	-4%	-4%	-3%	-3%

ENERGY ABSORBED/IN^3 (FOR 18.00 in DEFLECTION)

	AB	BC	CD	DE	EF	FG	GH	HJ	JK	KL	LM	MN	NP	PQ	QR	RS	ST
01	0.00	0.00	0.00	0.00	0.00	0.00	0.00	0.00	0.00	0.00	0.00	0.00	0.00	0.00	0.00	0.00	0.12
12	0.03	0.03	0.03	0.03	0.03	0.03	0.03	0.03	0.03	0.03	0.03	0.03	0.03	0.03	0.03	0.17	0.42
23	0.09	0.09	0.09	0.09	0.09	0.09	0.09	0.09	0.09	0.09	0.09	0.09	0.09	0.09	0.09	0.34	0.60
34	0.16	0.16	0.16	0.16	0.16	0.16	0.16	0.16	0.16	0.16	0.16	0.16	0.16	0.16	0.16	0.38	0.51
45	0.24	0.24	0.24	0.24	0.24	0.24	0.24	0.24	0.24	0.24	0.24	0.24	0.24	0.24	0.32	0.46	0.38
56	0.32	0.32	0.32	0.32	0.32	0.32	0.32	0.32	0.32	0.32	0.32	0.32	0.32	0.39	0.52	0.46	0.31
67	0.42	0.42	0.42	0.42	0.42	0.42	0.42	0.42	0.42	0.42	0.42	0.42	0.46	0.54	0.52	0.37	0.26
78	0.54	0.54	0.54	0.54	0.54	0.54	0.54	0.54	0.54	0.54	0.58	0.60	0.60	0.52	0.41	0.30	0.21
89	0.68	0.68	0.68	0.68	0.68	0.68	0.73	0.79	0.76	0.73	0.73	0.68	0.54	0.42	0.33	0.24	0.15
910	0.88	0.88	0.92	0.92	0.96	0.96	0.96	1.00	0.88	0.76	0.63	0.52	0.42	0.33	0.26	0.18	0.11
1011	1.00	1.00	1.00	1.00	1.00	0.96	0.88	0.76	0.66	0.58	0.49	0.41	0.33	0.26	0.19	0.13	0.07
1112	0.79	0.79	0.79	0.76	0.73	0.68	0.63	0.58	0.51	0.45	0.38	0.31	0.25	0.19	0.14	0.08	0.03
1213	0.58	0.58	0.58	0.56	0.54	0.51	0.48	0.38	0.33	0.33	0.29	0.23	0.18	0.13	0.08	0.03	0.00
1314	0.43	0.42	0.42	0.42	0.41	0.38	0.36	0.32	0.29	0.25	0.20	0.16	0.12	0.07	0.03	0.00	0.00
1415	0.31	0.31	0.31	0.30	0.30	0.28	0.26	0.23	0.20	0.16	0.13	0.09	0.05	0.02	0.00	0.00	0.00
1516	0.22	0.22	0.21	0.21	0.20	0.19	0.17	0.15	0.13	0.09	0.06	0.03	0.01	0.00	0.00	0.00	0.00
1617	0.13	0.13	0.13	0.13	0.12	0.11	0.09	0.08	0.05	0.03	0.01	0.00	0.00	0.00	0.00	0.00	0.00
1718	0.05	0.05	0.05	0.05	0.04	0.04	0.02	0.01	0.00	0.00	0.00	0.00	0.00	0.00	0.00	0.00	0.00
1819	0.00	0.00	0.00	0.00	0.00	0.00	0.00	0.00	0.00	0.00	0.00	0.00	0.00	0.00	0.00	0.00	0.00

TOTAL ENERGY ABSORBED FOR 18.00 in. DEFLECTION

	AB	BC	CD	DE	EF	FG	GH	HJ	JK	KL	LM	MN	NP	PQ	QR	RS	ST
01	0.0	0.0	0.0	0.0	0.0	0.0	0.0	0.0	0.0	0.0	0.0	0.0	0.0	0.0	0.0	0.0	14.0
12	3.1	3.1	3.1	3.1	3.1	3.1	3.1	3.1	3.1	3.1	3.1	3.1	3.1	3.1	3.1	19.6	59.4
23	9.2	9.2	9.2	9.2	9.2	9.2	9.2	9.2	9.2	9.2	9.2	9.2	9.2	9.2	9.2	42.5	85.9
34	16.3	16.3	16.3	16.3	16.3	16.3	16.3	16.3	16.3	16.3	16.3	16.3	16.3	16.3	16.3	44.5	72.6
45	24.4	24.4	24.4	24.4	24.4	24.4	24.4	24.4	24.4	24.4	24.4	24.4	24.4	24.4	33.8	55.7	58.0
56	32.6	32.6	32.6	32.6	32.6	32.6	32.6	32.6	32.6	32.6	32.6	32.6	32.6	40.5	59.1	60.4	48.2
67	42.8	42.8	42.8	42.8	42.8	42.8	42.8	42.8	42.8	42.8	42.8	42.8	47.8	59.2	62.3	49.4	40.4
78	55.0	55.0	55.0	55.0	55.0	55.0	55.0	55.0	55.0	55.0	58.9	61.3	64.0	59.0	49.9	40.1	32.7
89	69.2	69.2	69.2	69.2	69.2	69.2	73.8	78.7	74.8	72.1	73.0	69.8	58.0	47.6	40.1	32.0	23.3
910	86.4	86.2	89.7	89.0	92.0	91.5	91.2	94.2	82.8	72.8	62.3	53.4	45.1	37.4	31.6	24.0	17.1
1011	89.7	89.5	89.3	88.9	88.4	84.9	78.7	69.3	61.5	55.5	48.4	42.1	35.4	29.5	23.1	17.4	10.9
1112	67.1	67.2	67.6	65.5	63.5	59.9	56.4	52.9	47.5	43.1	37.5	31.8	26.8	21.6	17.0	10.7	4.7
1213	49.2	49.4	49.6	48.2	47.0	44.9	42.9	34.6	30.8	31.6	28.7	23.6	19.3	14.7	9.7	4.0	0.0
1314	36.5	35.7	35.9	36.2	35.7	33.5	32.2	29.2	27.0	23.9	19.8	16.4	12.9	7.9	3.6	0.0	0.0
1415	26.3	26.4	26.5	25.8	26.1	24.7	23.3	21.0	18.6	15.3	12.8	9.2	5.4	2.3	0.0	0.0	0.0
1516	18.7	18.7	18.0	18.1	17.4	16.7	15.2	13.7	12.1	8.6	5.9	3.1	1.1	0.0	0.0	0.0	0.0
1617	11.0	11.1	11.1	11.2	10.4	9.7	8.1	7.3	4.7	2.9	1.0	0.0	0.0	0.0	0.0	0.0	0.0
1718	4.2	4.3	4.3	4.3	3.5	3.5	1.8	0.9	0.0	0.0	0.0	0.0	0.0	0.0	0.0	0.0	0.0
1819	0.0	0.0	0.0	0.0	0.0	0.0	0.0	0.0	0.0	0.0	0.0	0.0	0.0	0.0	0.0	0.0	0.0

TOTAL ENERGY ABSORBED FOR 18.00 in DEFLECTION (IN-KIPS) ----------> 17969.2

CALCULATION OF G-LOADS (MAXIMUM) FOR 18.00 in. DEFLECTION

	AB	BC	CD	DE	EF	FG	GH	HJ	JK	KL	LM	MN	NP	PQ	QR	RS	ST
01	0.00	0.00	0.00	0.00	0.00	0.00	0.00	0.00	0.00	0.00	0.00	0.00	0.00	0.00	0.00	0.00	0.86
12	0.67	0.67	0.67	0.67	0.67	0.67	0.67	0.67	0.67	0.67	0.67	0.67	0.67	0.67	0.67	0.90	1.33
23	0.85	0.85	0.85	0.85	0.85	0.85	0.85	0.85	0.85	0.85	0.85	0.85	0.85	0.85	0.85	1.14	1.89
34	0.89	0.89	0.89	0.89	0.89	0.89	0.89	0.89	0.89	0.89	0.89	0.89	0.89	0.89	0.89	1.24	1.59
45	0.97	0.97	0.97	0.97	0.97	0.97	0.97	0.97	0.97	0.97	0.97	0.97	0.97	0.97	1.10	1.43	1.24
56	1.10	1.10	1.10	1.10	1.10	1.10	1.10	1.10	1.10	1.10	1.10	1.10	1.10	1.27	1.65	1.43	1.09
67	1.33	1.33	1.33	1.33	1.33	1.33	1.33	1.33	1.33	1.33	1.33	1.33	1.43	1.77	1.65	1.21	1.00
78	1.71	1.71	1.71	1.71	1.71	1.71	1.71	1.71	1.71	1.71	1.83	1.89	1.89	1.65	1.30	1.07	0.94
89	2.27	2.27	2.27	2.27	2.27	2.27	2.59	2.91	2.75	2.59	2.59	2.27	1.71	1.33	1.12	0.97	0.88
910	3.39	3.39	3.54	3.54	3.79	3.79	3.79	4.12	3.39	2.75	2.00	1.65	1.33	1.12	1.00	0.91	0.86
1011	4.12	4.12	4.12	4.12	4.12	3.79	3.39	2.75	2.11	1.83	1.53	1.30	1.12	1.00	0.92	0.86	0.84
1112	2.91	2.91	2.91	2.75	2.49	2.27	2.00	1.83	1.59	1.40	1.24	1.09	0.99	0.92	0.86	0.85	0.67
1213	1.83	1.83	1.83	1.77	1.71	1.59	1.47	1.37	1.24	1.12	1.05	0.96	0.91	0.86	0.85	0.67	0.18
1314	1.37	1.33	1.33	1.33	1.30	1.24	1.18	1.10	1.05	0.99	0.93	0.89	0.86	0.84	0.67	0.18	0.00
1415	1.09	1.09	1.09	1.07	1.07	1.04	1.00	0.96	0.93	0.89	0.86	0.85	0.82	0.54	0.06	0.00	0.00
1516	0.95	0.95	0.94	0.94	0.93	0.92	0.90	0.88	0.86	0.85	0.84	0.67	0.30	0.00	0.00	0.00	0.00
1617	0.86	0.86	0.86	0.86	0.86	0.86	0.85	0.85	0.82	0.67	0.30	0.00	0.00	0.00	0.00	0.00	0.00
1718	0.82	0.82	0.82	0.82	0.77	0.72	0.62	0.42	0.06	0.00	0.00	0.00	0.00	0.00	0.00	0.00	0.00
1819	0.00	0.00	0.00	0.00	0.00	0.00	0.00	0.00	0.00	0.00	0.00	0.00	0.00	0.00	0.00	0.00	0.00

MAXIMUM INERTIA (G) LOAD FOR 18.00 IN DEFLECTION ---------- 57.7

TITLE: 3-82B CORNER IMPACT ANALYSIS
PURPOSE: TO DETERMINE THE ADEQUACY OF THE 3-82B IMPACT LIMITERS TO ABSORB THE ENERGY GENERATED FROM A 30-FOOT DROP.
PROCEDURE: THE CONTACT SURFACE OF THE IMPACT LIMITER IS BROKEN UP INTO 2"x2" SQUARE SECTIONS NEXT, THE TOTAL CRUSHED DISTANCE IS DETERMINED FOR EACH CORNER POINT (NODE) OF THE SQUARE AND THE FOUR LENGTHS ARE AVERAGED TO FIND THE APPROXIMATE EQUIVILENT LENGTH. THIS LENGTH IS MULTIPLIED BY THE AREA TO DETERMINE THE CRUSHED VOLUME. THE CRUSHED VOLUME IS DIVIDED BY THE ORIGINAL VOLUME (DETERMINED IN A MANNER SIMILAR TO THE CRUSHED VOLUME) TO FIND THE VOLUMETRIC STRAIN ON THE FOAM. THIS STRAIN CAN BE USED IN CONJUNCTION WITH THE FOAM MANUFACTURES STRESS-STRAIN CURVE TO DETERMINE THE ABSORBED ENERGY OF THE FOAM.

CASE I-MAXIMUM DECELERATION

MATRIX FOR THE CRUSHED LENGTHS OF THE FOAM (SEE STD-02-058) 19.1 IN DEFLECTION

	X	A	B	C	D	E	F	G	H	J	K	L	M	N	P	Q	R	S	T
Y		0.0	2.0	4.0	6.0	8.0	10.0	12.0	14.0	16.0	18.0	20.0	22.0	24.0	26.0	28.0	30.0	32.0	34.0
0	0	0.0	0.0	0.0	0.0	0.0	0.0	0.0	0.0	0.0	0.0	0.0	0.0	0.0	0.0	0.0	0.0	0.0	0.0
1	2	2.0	2.0	2.0	2.0	2.0	2.0	2.0	2.0	2.0	2.0	2.0	2.0	2.0	2.0	2.0	2.0	2.0	23.9
2	4	4.0	4.0	4.0	4.0	4.0	4.0	4.0	4.0	4.0	4.0	4.0	4.0	4.0	4.0	4.0	4.0	23.7	21.9
3	6	6.0	6.0	6.0	6.0	6.0	6.0	6.0	6.0	6.0	6.0	6.0	6.0	6.0	6.0	6.0	6.0	21.7	19.9
4	8	8.0	8.0	8.0	8.0	8.0	8.0	8.0	8.0	8.0	8.0	8.0	8.0	8.0	8.0	8.0	8.0	19.7	17.9
5	10	10.0	10.0	10.0	10.0	10.0	10.0	10.0	10.0	10.0	10.0	10.0	10.0	10.0	10.0	10.0	19.4	17.7	15.9
6	12	12.0	12.0	12.0	12.0	12.0	12.0	12.0	12.0	12.0	12.0	12.0	12.0	12.0	12.0	18.9	17.4	15.7	13.9
7	14	14.0	14.0	14.0	14.0	14.0	14.0	14.0	14.0	14.0	14.0	14.0	14.0	14.0	18.2	16.9	15.4	13.7	11.9
8	16	16.0	16.0	16.0	16.0	16.0	16.0	16.0	16.0	16.0	16.0	16.0	18.4	17.4	16.2	14.9	13.4	11.7	9.9
9	18	18.0	18.0	18.0	18.0	18.0	18.0	18.0	19.3	18.7	18.1	17.3	16.4	15.4	14.2	12.9	11.4	9.7	7.9
10	20	18.2	18.2	18.2	18.2	18.1	18.0	17.7	17.3	16.7	16.1	15.3	14.4	13.4	12.2	10.9	9.4	7.7	5.9
11	22	16.2	16.2	16.2	16.2	16.1	16.0	15.7	15.3	14.7	14.1	13.3	12.4	11.4	10.2	8.9	7.4	5.7	3.9
12	24	14.2	14.2	14.2	14.2	14.1	14.0	13.7	13.3	12.7	12.1	11.3	10.4	9.4	8.2	6.9	5.4	3.7	1.9
13	26	12.2	12.2	12.2	12.2	12.1	12.0	11.7	11.3	10.7	10.1	9.3	8.4	7.4	6.2	4.9	3.4	1.7	
14	28	10.2	10.2	10.2	10.2	10.1	10.0	9.7	9.3	8.7	8.1	7.3	6.4	5.4	4.2	2.9	1.4		
15	30	8.2	8.2	8.2	8.2	8.1	8.0	7.7	7.3	6.7	6.1	5.3	4.4	3.4	2.2	0.9			
16	32	6.2	6.2	6.2	6.2	6.1	6.0	5.7	5.3	4.7	4.1	3.3	2.4	1.4	0.2				
17	34	4.2	4.2	4.2	4.2	4.1	4.0	3.7	3.3	2.7	2.1	1.3	0.4						
18	36	2.2	2.2	2.2	2.2	2.1	2.0	1.7	1.3	0.7	0.1								
19	38	0.2	0.2	0.2	0.2	0.1													

CALCULATION FOR THE AVE. CRUSHED LENGTH OF THE RECT. SECT. FOR 19.1in DEFL.

	AB	BC	CD	DE	EF	FG	GH	HJ	JK	KL	LM	MN	NP	PQ	QR	RS	ST
01	1.0	1.0	1.0	1.0	1.0	1.0	1.0	1.0	1.0	1.0	1.0	1.0	1.0	1.0	1.0	1.0	6.5
12	3.0	3.0	3.0	3.0	3.0	3.0	3.0	3.0	3.0	3.0	3.0	3.0	3.0	3.0	3.0	7.9	17.9
23	5.0	5.0	5.0	5.0	5.0	5.0	5.0	5.0	5.0	5.0	5.0	5.0	5.0	5.0	5.0	13.9	21.8
34	7.0	7.0	7.0	7.0	7.0	7.0	7.0	7.0	7.0	7.0	7.0	7.0	7.0	7.0	7.0	13.9	19.8
45	9.0	9.0	9.0	9.0	9.0	9.0	9.0	9.0	9.0	9.0	9.0	9.0	9.0	9.0	11.4	16.2	17.8
56	11.0	11.0	11.0	11.0	11.0	11.0	11.0	11.0	11.0	11.0	11.0	11.0	11.0	12.7	16.4	17.6	15.8
67	13.0	13.0	13.0	13.0	13.0	13.0	13.0	13.0	13.0	13.0	13.0	13.0	14.1	16.5	17.1	15.6	13.8
78	15.0	15.0	15.0	15.0	15.0	15.0	15.0	15.0	15.0	15.0	15.6	16.0	16.5	16.6	15.1	13.6	11.8
89	17.0	17.0	17.0	17.0	17.0	17.0	17.3	17.5	17.2	16.9	17.0	16.9	15.8	14.6	13.1	11.6	9.8
910	18.1	18.1	18.1	18.1	18.0	17.9	18.0	18.0	17.4	16.7	15.9	14.9	13.8	12.6	11.1	9.6	7.8
1011	17.2	17.2	17.2	17.2	17.0	16.8	16.5	16.0	15.4	14.7	13.9	12.9	11.8	10.6	9.1	7.6	5.8
1112	15.2	15.2	15.2	15.2	15.0	14.8	14.5	14.0	13.4	12.7	11.9	10.9	9.8	8.6	7.1	5.6	3.8
1213	13.2	13.2	13.2	13.2	13.0	12.8	12.5	12.0	11.4	10.7	9.9	8.9	7.8	6.6	5.1	3.6	1.9
1314	11.2	11.2	11.2	11.2	11.0	10.8	10.5	10.0	9.4	8.7	7.9	6.9	5.8	4.6	3.1	1.6	0.4
1415	9.2	9.2	9.2	9.2	9.0	8.8	8.5	8.0	7.4	6.7	5.9	4.9	3.8	2.6	1.3	0.4	0.0
1516	7.2	7.2	7.2	7.2	7.0	6.8	6.5	6.0	5.4	4.7	3.9	2.9	1.8	0.8	0.2	0.0	0.0
1617	5.2	5.2	5.2	5.2	5.0	4.8	4.5	4.0	3.4	2.7	1.9	1.1	0.4	0.1	0.0	0.0	0.0
1718	3.2	3.2	3.2	3.2	3.0	2.8	2.5	2.0	1.4	0.9	0.4	0.1	0.0	0.0	0.0	0.0	0.0
1819	1.2	1.2	1.2	1.2	1.1	0.9	0.7	0.5	0.2	.0	0.0	0.0	0.0	0.0	0.0	0.0	0.0

INPUT VALUES OF THE ORIG. LENGTH OF THE FOAM SECTIONS

Y/I		A	B	C	D	E	F	G	H	J	K	L	M	N	P	Q	R	S	T
		0.0	2.0	4.0	6.0	8.0	10.0	12.0	14.0	16.0	18.0	20.0	22.0	24.0	26.0	28.0	30.0	32.0	34.0
0	0.0	25.5	25.5	25.5	25.5	25.5	25.5	25.5	25.5	25.5	25.5	25.5	25.5	25.5	25.5	25.5	25.5	25.5	25.5
1	2.0	25.5	25.5	25.5	25.5	25.5	25.5	25.5	25.5	25.5	25.5	25.5	25.5	25.5	25.5	25.5	25.5	25.5	40.5
2	4.0	25.5	25.5	25.5	25.5	25.5	25.5	25.5	25.5	25.5	25.5	25.5	25.5	25.5	25.5	25.5	25.5	39.0	36.5
3	6.0	25.5	25.5	25.5	25.5	25.5	25.5	25.5	25.5	25.5	25.5	25.5	25.5	25.5	25.5	25.5	25.5	35.0	32.5
4	8.0	25.5	25.5	25.5	25.5	25.5	25.5	25.5	25.5	25.5	25.5	25.5	25.5	25.5	25.5	25.5	25.5	31.0	43.8
5	10.0	25.5	25.5	25.5	25.5	25.5	25.5	25.5	25.5	25.5	25.5	25.5	25.5	25.5	25.5	25.5	29.3	35.2	42.6
6	12.0	25.5	25.5	25.5	25.5	25.5	25.5	25.5	25.5	25.5	25.5	25.5	25.5	25.5	25.5	27.4	31.6	35.2	42.6
7	14.0	25.5	25.5	25.5	25.5	25.5	25.5	25.5	25.5	25.5	25.5	25.5	25.5	25.5	27.5	29.2	31.6	35.2	42.6
8	16.0	25.5	25.5	25.5	25.5	25.5	25.5	25.5	25.5	25.5	25.5	25.5	25.1	26.2	27.5	29.2	31.6	35.2	42.6
9	18.0	25.5	25.5	25.5	25.5	25.5	25.5	25.5	24.8	23.9	23.6	24.3	25.1	26.2	27.5	29.2	31.6	35.2	42.6
10	20.0	23.6	23.6	23.4	23.1	22.7	22.2	22.2	22.6	23.0	23.6	24.3	25.1	26.2	27.5	29.2	31.6	35.2	42.6
11	22.0	21.2	21.2	21.3	21.4	21.6	21.9	22.2	22.6	23.0	23.6	24.3	25.1	26.2	27.5	29.2	31.6	35.2	42.6
12	24.0	21.2	21.2	21.3	21.4	21.6	21.9	22.2	22.6	23.0	23.6	24.3	25.1	26.2	27.5	29.2	31.6	35.2	42.6
13	26.0	21.2	21.2	21.3	21.4	21.6	21.9	22.2	22.6	23.0	23.6	24.3	25.1	26.2	27.5	29.2	31.6	35.2	42.6
14	28.0	21.2	21.2	21.3	21.4	21.6	21.9	22.2	22.6	23.0	23.6	24.3	25.1	26.2	27.5	29.2	31.6	35.2	42.6
15	30.0	21.2	21.2	21.3	21.4	21.6	21.9	22.2	22.6	23.0	23.6	24.3	25.1	26.2	27.5	29.2	31.6	35.2	42.6
16	32.0	21.2	21.2	21.3	21.4	21.6	21.9	22.2	22.6	23.0	23.6	24.3	25.1	26.2	27.5	29.2	31.6	35.2	42.6
17	34.0	21.2	21.2	21.3	21.4	21.6	21.9	22.2	22.6	23.0	23.6	24.3	25.1	26.2	27.5	29.2	31.6	35.2	42.6
18	36.0	21.2	21.2	21.3	21.4	21.6	21.9	22.2	22.6	23.0	23.6	24.3	25.1	26.2	27.5	29.2	31.6	35.2	42.6
19	38.0	21.2	21.2	21.3	21.4	21.6	21.9	22.2	22.6	23.0	23.6	24.3	25.1	26.2	27.5	29.2	31.6	35.2	42.6

CALCULATED DATA ON THE ORIGINAL LENGTH OF FOAM SECTION

	AB	BC	CD	DE	EF	FG	GH	HJ	JK	KL	LM	MN	NP	PQ	QR	RS	ST
01	25.5	25.5	25.5	25.5	25.5	25.5	25.5	25.5	25.5	25.5	25.5	25.5	25.5	25.5	25.5	25.5	29.2
12	25.5	25.5	25.5	25.5	25.5	25.5	25.5	25.5	25.5	25.5	25.5	25.5	25.5	25.5	25.5	28.9	35.4
23	25.5	25.5	25.5	25.5	25.5	25.5	25.5	25.5	25.5	25.5	25.5	25.5	25.5	25.5	25.5	31.3	35.8
34	25.5	25.5	25.5	25.5	25.5	25.5	25.5	25.5	25.5	25.5	25.5	25.5	25.5	25.5	25.5	29.3	35.6
45	25.5	25.5	25.5	25.5	25.5	25.5	25.5	25.5	25.5	25.5	25.5	25.5	25.5	25.5	26.4	30.2	38.2
56	25.5	25.5	25.5	25.5	25.5	25.5	25.5	25.5	25.5	25.5	25.5	25.5	25.5	25.9	28.4	32.8	38.9
67	25.5	25.5	25.5	25.5	25.5	25.5	25.5	25.5	25.5	25.5	25.5	25.5	26.0	27.4	29.9	33.4	38.9
78	25.5	25.5	25.5	25.5	25.5	25.5	25.5	25.5	25.5	25.5	25.4	25.6	26.7	28.4	30.4	33.4	38.9
89	25.5	25.5	25.5	25.5	25.5	25.5	25.3	24.9	24.6	24.7	25.0	25.7	26.8	28.4	30.4	33.4	38.9
910	24.5	24.5	24.4	24.2	24.0	23.8	23.7	23.6	23.5	23.9	24.7	25.7	26.8	28.4	30.4	33.4	38.9
1011	22.4	22.4	22.3	22.2	22.1	22.1	22.4	22.8	23.3	23.9	24.7	25.7	26.8	28.4	30.4	33.4	38.9
1112	21.2	21.3	21.4	21.5	21.7	22.0	22.4	22.8	23.3	23.9	24.7	25.7	26.8	28.4	30.4	33.4	38.9
1213	21.2	21.3	21.4	21.5	21.7	22.0	22.4	22.8	23.3	23.9	24.7	25.7	26.8	28.4	30.4	33.4	38.9
1314	21.2	21.3	21.4	21.5	21.7	22.0	22.4	22.8	23.3	23.9	24.7	25.7	26.8	28.4	30.4	33.4	38.9
1415	21.2	21.3	21.4	21.5	21.7	22.0	22.4	22.8	23.3	23.9	24.7	25.7	26.8	28.4	30.4	33.4	38.9
1516	21.2	21.3	21.4	21.5	21.7	22.0	22.4	22.8	23.3	23.9	24.7	25.7	26.8	28.4	30.4	33.4	38.9
1617	21.2	21.3	21.4	21.5	21.7	22.0	22.4	22.8	23.3	23.9	24.7	25.7	26.8	28.4	30.4	33.4	38.9
1718	21.2	21.3	21.4	21.5	21.7	22.0	22.4	22.8	23.3	23.9	24.7	25.7	26.8	28.4	30.4	33.4	38.9
1819	21.2	21.3	21.4	21.5	21.7	22.0	22.4	22.8	23.3	23.9	24.7	25.7	26.8	28.4	30.4	33.4	38.9

PERCENT CRUSH FOR 19.1in DEFLECTION

	AB	BC	CD	DE	EF	FG	GH	HJ	JK	KL	LM	MN	NP	PQ	QR	RS	ST
01	4%	4%	4%	4%	4%	4%	4%	4%	4%	4%	4%	4%	4%	4%	4%	4%	22%
12	12%	12%	12%	12%	12%	12%	12%	12%	12%	12%	12%	12%	12%	12%	12%	28%	51%
23	20%	20%	20%	20%	20%	20%	20%	20%	20%	20%	20%	20%	20%	20%	20%	44%	61%
34	27%	27%	27%	27%	27%	27%	27%	27%	27%	27%	27%	27%	27%	27%	27%	47%	56%
45	35%	35%	35%	35%	35%	35%	35%	35%	35%	35%	35%	35%	35%	35%	43%	54%	47%
56	43%	43%	43%	43%	43%	43%	43%	43%	43%	43%	43%	43%	43%	49%	58%	54%	41%
67	51%	51%	51%	51%	51%	51%	51%	51%	51%	51%	51%	51%	54%	60%	57%	47%	36%
78	59%	59%	59%	59%	59%	59%	59%	59%	59%	59%	62%	62%	62%	58%	50%	41%	30%
89	67%	67%	67%	67%	67%	67%	68%	70%	70%	68%	68%	66%	59%	51%	43%	35%	25%
910	74%	74%	74%	75%	75%	75%	76%	76%	74%	70%	64%	58%	51%	44%	37%	29%	20%
1011	77%	77%	77%	77%	77%	76%	74%	70%	66%	61%	56%	50%	44%	37%	30%	23%	15%
1112	72%	71%	71%	70%	69%	67%	65%	61%	58%	53%	48%	43%	37%	30%	24%	17%	10%
1213	62%	62%	62%	61%	60%	58%	56%	53%	49%	45%	40%	35%	29%	23%	17%	11%	5%
1314	53%	53%	52%	52%	51%	49%	47%	44%	40%	36%	32%	27%	22%	16%	10%	5%	1%
1415	43%	43%	43%	43%	42%	40%	38%	35%	32%	28%	24%	19%	14%	9%	4%	1%	0%
1516	34%	34%	34%	33%	32%	31%	29%	26%	23%	20%	16%	11%	7%	3%	1%	0%	0%
1617	24%	24%	24%	24%	23%	22%	20%	18%	15%	11%	8%	4%	1%	0%	0%	0%	0%
1718	15%	15%	15%	15%	14%	13%	11%	9%	6%	4%	2%	0%	0%	0%	0%	0%	0%
1819	6%	6%	6%	5%	5%	4%	3%	2%	1%	0%	0%	0%	0%	0%	0%	0%	0%

MATRIX FOR THE CRUSHED LENGTH OF FOAM - 16.0 in DEFLECTION

	A	B	C	D	E	F	G	H	J	K	L	M	N	P	Q	R	S	T
0	-3.1	-3.1	-3.1	-3.1	-3.1	-3.1	-3.1	-3.1	-3.1	-3.1	-3.1	-3.1	-3.1	-3.1	-3.1	-3.1	-3.1	-3.1
1	-1.1	-1.1	-1.1	-1.1	-1.1	-1.1	-1.1	-1.1	-1.1	-1.1	-1.1	-1.1	-1.1	-1.1	-1.1	-1.1	-1.1	20.8
2	0.9	0.9	0.9	0.9	0.9	0.9	0.9	0.9	0.9	0.9	0.9	0.9	0.9	0.9	0.9	0.9	20.6	18.8
3	2.9	2.9	2.9	2.9	2.9	2.9	2.9	2.9	2.9	2.9	2.9	2.9	2.9	2.9	2.9	2.9	18.6	16.8
4	4.9	4.9	4.9	4.9	4.9	4.9	4.9	4.9	4.9	4.9	4.9	4.9	4.9	4.9	4.9	4.9	16.6	14.8
5	6.9	6.9	6.9	6.9	6.9	6.9	6.9	6.9	6.9	6.9	6.9	6.9	6.9	6.9	6.9	16.3	14.6	12.8
6	8.9	8.9	8.9	8.9	8.9	8.9	8.9	8.9	8.9	8.9	8.9	8.9	8.9	8.9	15.8	14.3	12.6	10.8
7	10.9	10.9	10.9	10.9	10.9	10.9	10.9	10.9	10.9	10.9	10.9	10.9	10.9	15.1	13.8	12.3	10.6	8.8
8	12.9	12.9	12.9	12.9	12.9	12.9	12.9	12.9	12.9	12.9	12.9	15.3	14.3	13.1	11.8	10.3	8.6	6.8
9	14.9	14.9	14.9	14.9	14.9	14.9	14.9	16.2	15.6	15.0	14.2	13.3	12.3	11.1	9.8	8.3	6.6	4.8
10	15.1	15.1	15.1	15.1	15.0	14.9	14.6	14.2	13.6	13.0	12.2	11.3	10.3	9.1	7.8	6.3	4.6	2.8
11	13.1	13.1	13.1	13.1	13.0	12.9	12.6	12.2	11.6	11.0	10.2	9.3	8.3	7.1	5.8	4.3	2.6	0.8
12	11.1	11.1	11.1	11.1	11.0	10.9	10.6	10.2	9.6	9.0	8.2	7.3	6.3	5.1	3.8	2.3	0.6	-1.2
13	9.1	9.1	9.1	9.1	9.0	8.9	8.6	8.2	7.6	7.0	6.2	5.3	4.3	3.1	1.8	0.3	-1.4	-3.1
14	7.1	7.1	7.1	7.1	7.0	6.9	6.6	6.2	5.6	5.0	4.2	3.3	2.3	1.1	-0.2	-1.7	-3.1	-3.1
15	5.1	5.1	5.1	5.1	5.0	4.9	4.6	4.2	3.6	3.0	2.2	1.3	0.3	-0.9	-2.2	-3.1	-3.1	-3.1
16	3.1	3.1	3.1	3.1	3.0	2.9	2.6	2.2	1.6	1.0	0.2	-0.7	-1.7	-2.9	-3.1	-3.1	-3.1	-3.1
17	1.1	1.1	1.1	1.1	1.0	0.9	0.6	0.2	-0.4	-1.0	-1.8	-2.7	-3.1	-3.1	-3.1	-3.1	-3.1	-3.1
18	-0.9	-0.9	-0.9	-0.9	-1.0	-1.1	-1.4	-1.8	-2.4	-3.0	-3.1	-3.1	-3.1	-3.1	-3.1	-3.1	-3.1	-3.1
19	-2.9	-2.9	-2.9	-2.9	-3.0	-3.1	-3.1	-3.1	-3.1	-3.1	-3.1	-3.1	-3.1	-3.1	-3.1	-3.1	-3.1	-3.1

CALCULATION FOR THE AVERAGE CRUSHED LENGTH OF FOAM SECTION 16.00 in DEFL.

	AB	BC	CD	DE	EF	FG	GH	HJ	JK	KL	LM	MN	NP	PQ	QR	RS	ST
01	-2.1	-2.1	-2.1	-2.1	-2.1	-2.1	-2.1	-2.1	-2.1	-2.1	-2.1	-2.1	-2.1	-2.1	-2.1	-2.1	3.4
12	-0.1	-0.1	-0.1	-0.1	-0.1	-0.1	-0.1	-0.1	-0.1	-0.1	-0.1	-0.1	-0.1	-0.1	-0.1	4.8	14.8
23	1.9	1.9	1.9	1.9	1.9	1.9	1.9	1.9	1.9	1.9	1.9	1.9	1.9	1.9	1.9	10.8	18.7
34	3.9	3.9	3.9	3.9	3.9	3.9	3.9	3.9	3.9	3.9	3.9	3.9	3.9	3.9	3.9	10.8	16.7
45	5.9	5.9	5.9	5.9	5.9	5.9	5.9	5.9	5.9	5.9	5.9	5.9	5.9	5.9	8.3	13.1	14.7
56	7.9	7.9	7.9	7.9	7.9	7.9	7.9	7.9	7.9	7.9	7.9	7.9	7.9	9.6	13.3	14.5	12.7
67	9.9	9.9	9.9	9.9	9.9	9.9	9.9	9.9	9.9	9.9	9.9	9.9	11.0	13.4	14.0	12.5	10.7
78	11.9	11.9	11.9	11.9	11.9	11.9	11.9	11.9	11.9	11.9	12.5	12.9	13.4	13.5	12.0	10.5	8.7
89	13.9	13.9	13.9	13.9	13.9	13.9	14.2	14.4	14.1	13.8	13.9	13.8	12.7	11.5	10.0	8.5	6.7
910	15.0	15.0	15.0	15.0	14.9	14.8	14.9	14.9	14.3	13.6	12.8	11.8	10.7	9.5	8.0	6.5	4.7
1011	14.1	14.1	14.1	14.1	13.9	13.7	13.4	12.9	12.3	11.6	10.8	9.8	8.7	7.5	6.0	4.5	2.7
1112	12.1	12.1	12.1	12.1	11.9	11.7	11.4	10.9	10.3	9.6	8.8	7.8	6.7	5.5	4.0	2.5	0.7
1213	10.1	10.1	10.1	10.1	9.9	9.7	9.4	8.9	8.3	7.6	6.8	5.8	4.7	3.5	2.0	0.5	-1.2
1314	8.1	8.1	8.1	8.1	7.9	7.7	7.4	6.9	6.3	5.6	4.8	3.8	2.7	1.5	.0	-1.5	-2.7
1415	6.1	6.1	6.1	6.1	5.9	5.7	5.4	4.9	4.3	3.6	2.8	1.8	0.7	-0.5	-1.8	-2.7	-3.1
1516	4.1	4.1	4.1	4.1	3.9	3.7	3.4	2.9	2.3	1.6	0.8	-0.2	-1.3	-2.3	-2.9	-3.1	-3.1
1617	2.1	2.1	2.1	2.1	1.9	1.7	1.4	0.9	0.3	-0.4	-1.2	-2.0	-2.7	-3.0	-3.1	-3.1	-3.1
1718	0.1	0.1	0.1	0.1	-0.1	-0.3	-0.6	-1.1	-1.7	-2.2	-2.7	-3.0	-3.1	-3.1	-3.1	-3.1	-3.1
1819	-1.9	-1.9	-1.9	-1.9	-2.0	-2.2	-2.4	-2.6	-2.9	-3.1	-3.1	-3.1	-3.1	-3.1	-3.1	-3.1	-3.1

INPUT VALUES OF ORIGINAL FOAM LENGTHS FOR 16.00 IN DEFL.

	A	B	C	D	E	F	G	H	J	K	L	M	N	P	Q	R	S	T
0	25.5	25.5	25.5	25.5	25.5	25.5	25.5	25.5	25.5	25.5	25.5	25.5	25.5	25.5	25.5	25.5	25.5	25.5
1	25.5	25.5	25.5	25.5	25.5	25.5	25.5	25.5	25.5	25.5	25.5	25.5	25.5	25.5	25.5	25.5	25.5	40.5
2	25.5	25.5	25.5	25.5	25.5	25.5	25.5	25.5	25.5	25.5	25.5	25.5	25.5	25.5	25.5	25.5	39.0	36.5
3	25.5	25.5	25.5	25.5	25.5	25.5	25.5	25.5	25.5	25.5	25.5	25.5	25.5	25.5	25.5	25.5	35.0	32.5
4	25.5	25.5	25.5	25.5	25.5	25.5	25.5	25.5	25.5	25.5	25.5	25.5	25.5	25.5	25.5	25.5	31.0	43.8
5	25.5	25.5	25.5	25.5	25.5	25.5	25.5	25.5	25.5	25.5	25.5	25.5	25.5	25.5	25.5	29.3	35.2	42.6
6	25.5	25.5	25.5	25.5	25.5	25.5	25.5	25.5	25.5	25.5	25.5	25.5	25.5	25.5	27.4	31.6	35.2	42.6
7	25.5	25.5	25.5	25.5	25.5	25.5	25.5	25.5	25.5	25.5	25.5	25.5	25.5	27.5	29.2	31.6	35.2	42.6
8	25.5	25.5	25.5	25.5	25.5	25.5	25.5	25.5	25.5	25.5	25.5	25.1	26.2	27.5	29.2	31.6	35.2	42.6
9	25.5	25.5	25.5	25.5	25.5	25.5	25.5	24.8	23.9	23.6	24.3	25.1	26.2	27.5	29.2	31.6	35.2	42.6
10	23.6	23.6	23.4	23.1	22.7	22.2	22.2	22.6	23.0	23.6	24.3	25.1	26.2	27.5	29.2	31.6	35.2	42.6
11	21.2	21.2	21.3	21.4	21.6	21.9	22.2	22.6	23.0	23.6	24.3	25.1	26.2	27.5	29.2	31.6	35.2	42.6
12	21.2	21.2	21.3	21.4	21.6	21.9	22.2	22.6	23.0	23.6	24.3	25.1	26.2	27.5	29.2	31.6	35.2	42.6
13	21.2	21.2	21.3	21.4	21.6	21.9	22.2	22.6	23.0	23.6	24.3	25.1	26.2	27.5	29.2	31.6	35.2	42.6
14	21.2	21.2	21.3	21.4	21.6	21.9	22.2	22.6	23.0	23.6	24.3	25.1	26.2	27.5	29.2	31.6	35.2	42.6
15	21.2	21.2	21.3	21.4	21.6	21.9	22.2	22.6	23.0	23.6	24.3	25.1	26.2	27.5	29.2	31.6	35.2	42.6
16	21.2	21.2	21.3	21.4	21.6	21.9	22.2	22.6	23.0	23.6	24.3	25.1	26.2	27.5	29.2	31.6	35.2	42.6
17	21.2	21.2	21.3	21.4	21.6	21.9	22.2	22.6	23.0	23.6	24.3	25.1	26.2	27.5	29.2	31.6	35.2	42.6
18	21.2	21.2	21.3	21.4	21.6	21.9	22.2	22.6	23.0	23.6	24.3	25.1	26.2	27.5	29.2	31.6	35.2	42.6
19	21.2	21.2	21.3	21.4	21.6	21.9	22.2	22.6	23.0	23.6	24.3	25.1	26.2	27.5	29.2	31.6	35.2	42.6

CALCULATED AVERAGE ORIGINAL LENGTHS OF SECTION FOR 16.00in DEFLECTION

	AB	BC	CD	DE	EF	FG	GH	HJ	JK	KL	LM	MN	NP	PQ	QR	RS	ST
01	25.5	25.5	25.5	25.5	25.5	25.5	25.5	25.5	25.5	25.5	25.5	25.5	25.5	25.5	25.5	25.5	29.2
12	25.5	25.5	25.5	25.5	25.5	25.5	25.5	25.5	25.5	25.5	25.5	25.5	25.5	25.5	25.5	28.9	35.4
23	25.5	25.5	25.5	25.5	25.5	25.5	25.5	25.5	25.5	25.5	25.5	25.5	25.5	25.5	25.5	31.3	35.8
34	25.5	25.5	25.5	25.5	25.5	25.5	25.5	25.5	25.5	25.5	25.5	25.5	25.5	25.5	25.5	29.3	35.6
45	25.5	25.5	25.5	25.5	25.5	25.5	25.5	25.5	25.5	25.5	25.5	25.5	25.5	25.5	26.4	30.2	38.2
56	25.5	25.5	25.5	25.5	25.5	25.5	25.5	25.5	25.5	25.5	25.5	25.5	25.5	25.9	28.4	32.8	38.9
67	25.5	25.5	25.5	25.5	25.5	25.5	25.5	25.5	25.5	25.5	25.5	25.5	26.0	27.4	29.9	33.4	38.9
78	25.5	25.5	25.5	25.5	25.5	25.5	25.5	25.5	25.5	25.5	25.4	25.6	26.7	28.4	30.4	33.4	38.9
89	25.5	25.5	25.5	25.5	25.5	25.5	25.3	24.9	24.6	24.7	25.0	25.7	26.8	28.4	30.4	33.4	38.9
910	24.5	24.5	24.4	24.2	24.0	23.8	23.7	23.6	23.5	23.9	24.7	25.7	26.8	28.4	30.4	33.4	38.9
1011	22.4	22.4	22.3	22.2	22.1	22.1	22.4	22.8	23.3	23.9	24.7	25.7	26.8	28.4	30.4	33.4	38.9
1112	21.2	21.3	21.4	21.5	21.7	22.0	22.4	22.8	23.3	23.9	24.7	25.7	26.8	28.4	30.4	33.4	38.9
1213	21.2	21.3	21.4	21.5	21.7	22.0	22.4	22.8	23.3	23.9	24.7	25.7	26.8	28.4	30.4	33.4	38.9
1314	21.2	21.3	21.4	21.5	21.7	22.0	22.4	22.8	23.3	23.9	24.7	25.7	26.8	28.4	30.4	33.4	38.9
1415	21.2	21.3	21.4	21.5	21.7	22.0	22.4	22.8	23.3	23.9	24.7	25.7	26.8	28.4	30.4	33.4	38.9
1516	21.2	21.3	21.4	21.5	21.7	22.0	22.4	22.8	23.3	23.9	24.7	25.7	26.8	28.4	30.4	33.4	38.9
1617	21.2	21.3	21.4	21.5	21.7	22.0	22.4	22.8	23.3	23.9	24.7	25.7	26.8	28.4	30.4	33.4	38.9
1718	21.2	21.3	21.4	21.5	21.7	22.0	22.4	22.8	23.3	23.9	24.7	25.7	26.8	28.4	30.4	33.4	38.9
1819	21.2	21.3	21.4	21.5	21.7	22.0	22.4	22.8	23.3	23.9	24.7	25.7	26.8	28.4	30.4	33.4	38.9

PERCENT CRUSH FOR SECTION 16.00in DEFLECTION

	AB	BC	CD	DE	EF	FG	GH	HJ	JK	KL	LM	MN	NP	PQ	QR	RS	ST
01	-8%	-8%	-8%	-8%	-8%	-8%	-8%	-8%	-8%	-8%	-8%	-8%	-8%	-8%	-8%	-8%	12%
12	0%	0%	0%	0%	0%	0%	0%	0%	0%	0%	0%	0%	0%	0%	0%	17%	42%
23	7%	7%	7%	7%	7%	7%	7%	7%	7%	7%	7%	7%	7%	7%	7%	34%	52%
34	15%	15%	15%	15%	15%	15%	15%	15%	15%	15%	15%	15%	15%	15%	15%	37%	47%
45	23%	23%	23%	23%	23%	23%	23%	23%	23%	23%	23%	23%	23%	23%	31%	43%	39%
56	31%	31%	31%	31%	31%	31%	31%	31%	31%	31%	31%	31%	31%	37%	47%	44%	33%
67	39%	39%	39%	39%	39%	39%	39%	39%	39%	39%	39%	39%	42%	49%	47%	37%	28%
78	47%	47%	47%	47%	47%	47%	47%	47%	47%	47%	49%	50%	50%	47%	40%	31%	22%
89	55%	55%	55%	55%	55%	55%	56%	58%	57%	56%	56%	54%	47%	40%	33%	25%	17%
910	61%	61%	62%	62%	62%	62%	63%	63%	61%	57%	52%	46%	40%	33%	26%	19%	12%
1011	63%	63%	63%	63%	63%	62%	60%	57%	53%	49%	44%	38%	32%	26%	20%	13%	7%
1112	57%	57%	57%	56%	55%	53%	51%	48%	44%	40%	36%	30%	25%	19%	13%	7%	2%
1213	48%	47%	47%	47%	46%	44%	42%	39%	36%	32%	27%	23%	18%	12%	7%	1%	-3%
1314	38%	38%	38%	37%	37%	35%	33%	30%	27%	23%	19%	15%	10%	5%	0%	-4%	-7%
1415	29%	29%	28%	28%	27%	26%	24%	22%	19%	15%	11%	7%	3%	-2%	-6%	-8%	-8%
1516	19%	19%	19%	19%	18%	17%	15%	13%	10%	7%	3%	-1%	-5%	-8%	-9%	-9%	-8%
1617	10%	10%	10%	10%	9%	8%	6%	4%	1%	-2%	-5%	-8%	-10%	-11%	-10%	-9%	-8%
1718	0%	0%	0%	0%	0%	-1%	-3%	-5%	-7%	-9%	-11%	-12%	-12%	-11%	-10%	-9%	-8%
1819	-9%	-9%	-9%	-9%	-9%	-10%	-11%	-11%	-12%	-13%	-13%	-12%	-12%	-11%	-10%	-9%	-8%

ENERGY ABSORBED/IN^3 (FOR 16.00in deflection)

	AB	BC	CD	DE	EF	FG	GH	HJ	JK	KL	LM	MN	NP	PQ	QR	RS	ST
01	0.00	0.00	0.00	0.00	0.00	0.00	0.00	0.00	0.00	0.00	0.00	0.00	0.00	0.00	0.00	0.00	0.09
12	0.00	0.00	0.00	0.00	0.00	0.00	0.00	0.00	0.00	0.00	0.00	0.00	0.00	0.00	0.00	0.15	0.50
23	0.03	0.03	0.03	0.03	0.03	0.03	0.03	0.03	0.03	0.03	0.03	0.03	0.03	0.03	0.03	0.34	0.70
34	0.12	0.12	0.12	0.12	0.12	0.12	0.12	0.12	0.12	0.12	0.12	0.12	0.12	0.12	0.12	0.42	0.59
45	0.22	0.22	0.22	0.22	0.22	0.22	0.22	0.22	0.22	0.22	0.22	0.22	0.22	0.22	0.33	0.52	0.45
56	0.33	0.33	0.33	0.33	0.33	0.33	0.33	0.33	0.33	0.33	0.33	0.33	0.33	0.42	0.59	0.53	0.35
67	0.45	0.45	0.45	0.45	0.45	0.45	0.45	0.45	0.45	0.45	0.45	0.45	0.50	0.63	0.59	0.42	0.28
78	0.59	0.59	0.59	0.59	0.59	0.59	0.59	0.59	0.59	0.59	0.63	0.65	0.65	0.59	0.46	0.33	0.21
89	0.77	0.77	0.77	0.77	0.77	0.77	0.80	0.86	0.83	0.80	0.80	0.75	0.59	0.46	0.35	0.24	0.15
910	0.95	0.95	0.99	0.99	0.99	0.99	1.03	1.03	0.95	0.83	0.70	0.57	0.46	0.35	0.26	0.17	0.09
1011	1.03	1.03	1.03	1.03	1.03	0.99	0.92	0.83	0.72	0.63	0.53	0.43	0.34	0.26	0.18	0.10	0.03
1112	0.83	0.83	0.83	0.80	0.77	0.72	0.67	0.61	0.53	0.46	0.40	0.31	0.24	0.17	0.10	0.03	0.00
1213	0.61	0.59	0.59	0.59	0.57	0.53	0.50	0.45	0.40	0.34	0.27	0.22	0.16	0.09	0.03	0.00	0.00
1314	0.43	0.43	0.43	0.42	0.42	0.39	0.35	0.31	0.27	0.22	0.17	0.12	0.06	0.02	0.00	0.00	0.00
1415	0.30	0.30	0.28	0.28	0.27	0.26	0.23	0.21	0.17	0.12	0.08	0.03	0.01	0.00	0.00	0.00	0.00
1516	0.17	0.17	0.17	0.17	0.16	0.15	0.12	0.10	0.06	0.03	0.01	0.00	0.00	0.00	0.00	0.00	0.00
1617	0.06	0.06	0.06	0.06	0.06	0.05	0.04	0.02	0.01	0.00	0.00	0.00	0.00	0.00	0.00	0.00	0.00
1718	0.00	0.00	0.00	0.00	0.00	0.00	0.00	0.00	0.00	0.00	0.00	0.00	0.00	0.00	0.00	0.00	0.00
1819	0.00	0.00	0.00	0.00	0.00	0.00	0.00	0.00	0.00	0.00	0.00	0.00	0.00	0.00	0.00	0.00	0.00

TOTAL ENERGY ABSORBED FOR 16.00in. DEFLECTION

	AB	BC	CD	DE	EF	FG	GH	HJ	JK	KL	LM	MN	NP	PQ	QR	RS	ST
01	0.0	0.0	0.0	0.0	0.0	0.0	0.0	0.0	0.0	0.0	0.0	0.0	0.0	0.0	0.0	0.0	10.5
12	0.0	0.0	0.0	0.0	0.0	0.0	0.0	0.0	0.0	0.0	0.0	0.0	0.0	0.0	0.0	17.3	70.8
23	3.1	3.1	3.1	3.1	3.1	3.1	3.1	3.1	3.1	3.1	3.1	3.1	3.1	3.1	3.1	42.5	100.2
34	12.2	12.2	12.2	12.2	12.2	12.2	12.2	12.2	12.2	12.2	12.2	12.2	12.2	12.2	12.2	49.1	84.0
45	22.4	22.4	22.4	22.4	22.4	22.4	22.4	22.4	22.4	22.4	22.4	22.4	22.4	22.4	34.9	62.9	68.7
56	33.6	33.6	33.6	33.6	33.6	33.6	33.6	33.6	33.6	33.6	33.6	33.6	33.6	43.6	67.1	69.6	54.4
67	45.8	45.8	45.8	45.8	45.8	45.8	45.8	45.8	45.8	45.8	45.8	45.8	51.9	69.0	70.7	56.1	43.6
78	60.1	60.1	60.1	60.1	60.1	60.1	60.1	60.1	60.1	60.1	63.9	66.4	69.3	64.9	55.9	44.1	32.7
89	78.4	78.4	78.4	78.4	78.4	78.4	80.9	85.6	81.7	79.0	80.0	77.0	63.3	52.2	42.6	32.0	23.3
910	93.2	93.0	96.5	95.8	94.9	94.3	97.8	97.1	89.4	79.5	69.2	58.5	49.4	39.7	31.6	22.7	14.0
1011	92.4	92.2	92.0	91.6	91.1	87.5	82.3	75.7	67.1	60.3	52.4	44.1	36.5	29.5	21.9	13.4	4.7
1112	70.5	70.6	71.0	68.9	67.0	63.4	59.9	55.6	49.4	44.0	39.5	31.8	25.8	19.3	12.2	4.0	0.0
1213	51.8	50.2	50.4	50.8	49.6	46.7	44.7	41.0	37.3	32.5	26.7	22.6	17.2	10.2	3.6	0.0	0.0
1314	36.5	36.6	36.8	36.2	36.5	34.3	31.3	28.3	25.2	21.1	16.8	12.3	6.4	2.3	0.0	0.0	0.0
1415	25.5	25.5	23.9	24.1	23.5	22.9	20.6	19.1	15.8	11.5	7.9	3.1	1.1	0.0	0.0	0.0	0.0
1516	14.4	14.5	14.5	14.6	13.9	13.2	10.7	9.1	5.6	2.9	1.0	0.0	0.0	0.0	0.0	0.0	0.0
1617	5.1	5.1	5.1	5.2	5.2	4.4	3.6	1.8	0.9	0.0	0.0	0.0	0.0	0.0	0.0	0.0	0.0
1718	0.0	0.0	0.0	0.0	0.0	0.0	0.0	0.0	0.0	0.0	0.0	0.0	0.0	0.0	0.0	0.0	0.0
1819	0.0	0.0	0.0	0.0	0.0	0.0	0.0	0.0	0.0	0.0	0.0	0.0	0.0	0.0	0.0	0.0	0.0

TOTAL ENERGY ABSORBED FOR 16.00in. DEFLECTION (IN-KIPS) ----------> 18079.1

CALCULATION OF G-LOADS (MAXIMUM) FOR 16.00in. DEFLECTION

	AB	BC	CD	DE	EF	FG	GH	HJ	JK	KL	LM	MN	NP	PQ	QR	RS	ST
01	0.00	0.00	0.00	0.00	0.00	0.00	0.00	0.00	0.00	0.00	0.00	0.00	0.00	0.00	0.00	0.00	1.16
12	0.00	0.00	0.00	0.00	0.00	0.00	0.00	0.00	0.00	0.00	0.00	0.00	0.00	0.00	0.00	1.18	1.72
23	0.84	0.84	0.84	0.84	0.84	0.84	0.84	0.84	0.84	0.84	0.84	0.84	0.84	0.84	0.84	1.49	2.29
34	1.17	1.17	1.17	1.17	1.17	1.17	1.17	1.17	1.17	1.17	1.17	1.17	1.17	1.17	1.17	1.56	1.95
45	1.25	1.25	1.25	1.25	1.25	1.25	1.25	1.25	1.25	1.25	1.25	1.25	1.25	1.25	1.42	1.76	1.61
56	1.42	1.42	1.42	1.42	1.42	1.42	1.42	1.42	1.42	1.42	1.42	1.42	1.42	1.56	1.95	1.81	1.47
67	1.61	1.61	1.61	1.61	1.61	1.61	1.61	1.61	1.61	1.61	1.61	1.61	1.72	2.04	1.95	1.56	1.36
78	1.95	1.95	1.95	1.95	1.95	1.95	1.95	1.95	1.95	1.95	2.04	2.09	2.09	1.95	1.63	1.42	1.23
89	2.63	2.63	2.63	2.63	2.63	2.63	2.74	2.97	2.86	2.74	2.74	2.51	1.95	1.63	1.47	1.29	1.18
910	3.41	3.41	3.73	3.73	3.73	3.73	4.05	4.05	3.41	2.86	2.29	1.90	1.63	1.47	1.31	1.19	1.16
1011	4.05	4.05	4.05	4.05	4.05	3.73	3.20	2.86	2.40	2.04	1.81	1.59	1.44	1.31	1.20	1.16	0.84
1112	2.86	2.86	2.86	2.74	2.63	2.40	2.17	2.00	1.81	1.63	1.54	1.40	1.29	1.19	1.16	0.84	0.21
1213	2.00	1.95	1.95	1.95	1.90	1.81	1.72	1.61	1.54	1.44	1.34	1.25	1.19	1.16	0.84	0.07	0.00
1314	1.59	1.59	1.59	1.56	1.56	1.51	1.47	1.40	1.34	1.25	1.19	1.17	1.11	0.63	0.00	0.00	0.00
1415	1.38	1.38	1.36	1.36	1.34	1.31	1.27	1.23	1.19	1.17	1.15	0.84	0.35	0.00	0.00	0.00	0.00
1516	1.19	1.19	1.19	1.19	1.19	1.18	1.17	1.16	1.11	0.84	0.35	0.00	0.00	0.00	0.00	0.00	0.00
1617	1.11	1.11	1.11	1.11	1.02	0.93	0.75	0.49	0.07	0.00	0.00	0.00	0.00	0.00	0.00	0.00	0.00
1718	0.00	0.00	0.00	0.00	0.00	0.00	0.00	0.00	0.00	0.00	0.00	0.00	0.00	0.00	0.00	0.00	0.00
1819	0.00	0.00	0.00	0.00	0.00	0.00	0.00	0.00	0.00	0.00	0.00	0.00	0.00	0.00	0.00	0.00	0.00

MAXIMUM INERTIA (G) LOAD FOR 16.00in DEFLECTION ---------- 62.2

2.10 Appendix B

Side Drop Analysis - Computer

The analysis performed by the IBM-PC computer was based on the method of analysis of Section I of the main text. The computer was used as an aid in performing the repetitive calculations required by the analysis method. A description of the analysis is given below.

The first matrix lists the uncrushed lengths of all listed foam sections. Calculation of these values is performd by using the equations of Section 2.10.6.3.

The second matrix calculates the average uncrushed length for each section, i.e.,:

$$L_{(CD45)} = (L_{(C4)} + L_{(C5)} + L_{(D4)} + L_{(D5)})/4$$

The next two matrices determine the length crushed of the corresponding sections by using the equations of Section 2.10.6.3.

The fifth matrix determines the percent crush for each section by dividing the length crushed by the original uncrushed length.

The next matrix contains input data from the derived energy absorption curve. This information can be found in the main text.

The values of the energy absorption/in^3 matrix are multiplied by the foam volume of each section (2 in x 2 in x original length), to find the total absorbed energy per foam section. These values are summed and multiplied by 4 (symmetric contact surface) to find the total absorbed energy of the impact skirt.

In order to find the maximum inertia load, the stresses corresponding to the % crush of the section were first put into a matrix. Next, the matrix values were summed and multiplied by the section area, quadrupled for symmetry and divided by the total package weight.

$$\text{Inertia Load} = \frac{\Sigma\sigma(a)(4)}{wt} = \frac{\Sigma\sigma(4\ in^2)(4)}{50{,}000\ lbs}$$

SIDE DROP CASE II-MAXIMUM CRUSH
LAST-A-FOAM FR-3718.25

UNCRUSHED LENGTH OF FOAM

OUTSIDE RADIUS= 49.50

	0.00 A	2.00 B	4.00 C	6.00 D	8.00 E	10.00 F	12.00 G	14.00 H	16.00 I	18.00 J	20.00 K	22.00 L	24.00 M	26.00 N	28.00 O	30.00 P	32.00 Q	34.00 R
0																		
2																		
4																		
6																		
8																		
10																		
12																		
14																		
16																		
18																		
18	15.00	15.02	15.07	15.16	15.29	15.46	15.68	15.95	16.28	16.68	17.17	17.77	18.51	19.44	20.66	22.34	24.87	30.12
20	15.00	15.02	15.07	15.16	15.29	15.46	15.68	15.95	16.28	16.68	17.17	17.77	18.51	19.44	20.66	22.34	24.87	30.12
22	15.00	15.02	15.07	15.16	15.29	15.46	15.68	15.95	16.28	16.68	17.17	17.77	18.51	19.44	20.66	22.34	24.87	30.12
24	15.00	15.02	15.07	15.16	15.29	15.46	15.68	15.95	16.28	16.68	17.17	17.77	18.51	19.44	20.66	22.34	24.87	30.12
26	15.00	15.02	15.07	15.16	15.29	15.46	15.68	15.95	16.28	16.68	17.17	17.77	18.51	19.44	20.66	22.34	24.87	30.12
28	15.00	15.02	15.07	15.16	15.29	15.46	15.68	15.95	16.28	16.68	17.17	17.77	18.51	19.44	20.66	22.34	24.87	30.12
30	15.00	15.02	15.07	15.16	15.29	15.46	15.68	15.95	16.28	16.68	17.17	17.77	18.51	19.44	20.66	22.34	24.87	30.12
32	12.50	12.52	12.56	12.64	12.75	12.90	13.10	13.33	13.63	13.98	14.42	14.96	15.63	16.48	17.59	19.14	21.53	26.60
34	10.00	10.01	10.05	10.12	10.22	10.34	10.51	10.71	10.96	11.26	11.64	12.11	12.69	13.44	14.43	15.83	18.03	22.86
36	7.50	7.51	7.54	7.59	7.67	7.77	7.90	8.07	8.27	8.52	8.82	9.20	9.68	10.31	11.15	12.36	14.31	18.81
38	5.00	5.01	5.03	5.07	5.12	5.19	5.29	5.40	5.55	5.73	5.95	6.23	6.59	7.06	7.71	8.66	10.26	14.25
40	2.50	2.50	2.52	2.54	2.57	2.60	2.65	2.72	2.80	2.89	3.02	3.17	3.38	3.65	4.03	4.62	5.68	8.74
42	0.00	0.00	0.00	0.00	0.00	0.00	0.00	0.00	0.00	0.00	0.00	0.00	0.00	0.00	0.00	0.00	0.00	0.00

AVERAGE UNCRUSHED LENGTHS OF FOAM

	AB	BC	CD	DE	EF	FG	GH	HI	IJ	JK	KL	LM	MN	NO	OP	PQ	QR
02																	
24																	
46																	
68																	
810																	
1012																	
1214																	
1416																	
1618																	
1820	15.01	15.04	15.12	15.23	15.38	15.57	15.81	16.11	16.48	16.92	17.47	18.14	18.98	20.05	21.50	23.60	27.50
2022	15.01	15.04	15.12	15.23	15.38	15.57	15.81	16.11	16.48	16.92	17.47	18.14	18.98	20.05	21.50	23.60	27.50
2224	15.01	15.04	15.12	15.23	15.38	15.57	15.81	16.11	16.48	16.92	17.47	18.14	18.98	20.05	21.50	23.60	27.50
2426	15.01	15.04	15.12	15.23	15.38	15.57	15.81	16.11	16.48	16.92	17.47	18.14	18.98	20.05	21.50	23.60	27.50
2628	15.01	15.04	15.12	15.23	15.38	15.57	15.81	16.11	16.48	16.92	17.47	18.14	18.98	20.05	21.50	23.60	27.50
2830	15.01	15.04	15.12	15.23	15.38	15.57	15.81	16.11	16.48	16.92	17.47	18.14	18.98	20.05	21.50	23.60	27.50
3032	13.76	13.79	13.86	13.96	14.10	14.28	14.51	14.80	15.14	15.56	16.08	16.71	17.51	18.54	19.93	21.97	25.78
3234	11.26	11.29	11.34	11.43	11.55	11.71	11.91	12.16	12.46	12.83	13.28	13.84	14.56	15.48	16.75	18.63	22.25
3436	8.76	8.78	8.83	8.90	9.00	9.13	9.30	9.50	9.75	10.06	10.44	10.92	11.53	12.33	13.44	15.13	18.50
3638	6.25	6.27	6.31	6.36	6.44	6.54	6.67	6.82	7.01	7.25	7.55	7.93	8.41	9.06	9.97	11.40	14.41
3840	3.75	3.76	3.79	3.82	3.87	3.93	4.02	4.12	4.24	4.40	4.59	4.84	5.17	5.61	6.25	7.31	9.73
4042	1.25	1.25	1.26	1.28	1.29	1.31	1.34	1.38	1.42	1.48	1.55	1.64	1.76	1.92	2.16	2.58	3.61

CRUSHED LENGTHS OF FOAM

REFLECTION= 12.10 OUTSIDE RADIUS= 49.50

/	0.00	2.00	4.00	6.00	8.00	10.00	12.00	14.00	16.00	18.00	20.00	22.00	24.00	26.00	28.00	30.00	32.00	34.00
	A	B	C	D	E	F	G	H	I	J	K	L	M	N	O	P	Q	R
Y																		
0																		
2																		
4																		
6																		
8																		
10																		
12																		
14																		
16																		
18	12.10	12.06	11.94	11.74	11.45	11.08	10.62	10.08	9.44	8.71	7.88	6.94	5.89	4.72	3.42	1.97	0.37	-1.42
20	12.10	12.06	11.94	11.74	11.45	11.08	10.62	10.08	9.44	8.71	7.88	6.94	5.89	4.72	3.42	1.97	0.37	-1.42
22	12.10	12.06	11.94	11.74	11.45	11.08	10.62	10.08	9.44	8.71	7.88	6.94	5.89	4.72	3.42	1.97	0.37	-1.42
24	12.10	12.06	11.94	11.74	11.45	11.08	10.62	10.08	9.44	8.71	7.88	6.94	5.89	4.72	3.42	1.97	0.37	-1.42
26	12.10	12.06	11.94	11.74	11.45	11.08	10.62	10.08	9.44	8.71	7.88	6.94	5.89	4.72	3.42	1.97	0.37	-1.42
28	12.10	12.06	11.94	11.74	11.45	11.08	10.62	10.08	9.44	8.71	7.88	6.94	5.89	4.72	3.42	1.97	0.37	-1.42
30	12.10	12.06	11.94	11.74	11.45	11.08	10.62	10.08	9.44	8.71	7.88	6.94	5.89	4.72	3.42	1.97	0.37	-1.42
32	9.60	9.56	9.43	9.22	8.91	8.52	8.04	7.47	6.79	6.02	5.13	4.13	3.01	1.75	0.35	-1.22	-2.98	-4.95
34	7.10	7.06	6.92	6.69	6.37	5.96	5.45	4.84	4.12	3.30	2.35	1.28	0.07	-1.29	-2.81	-4.53	-6.48	-8.69
36	4.60	4.55	4.41	4.17	3.83	3.39	2.85	2.20	1.43	0.55	-0.47	-1.62	-2.93	-4.42	-6.10	-8.01	-10.20	-12.74
38	2.10	2.05	1.90	1.64	1.28	0.81	0.23	-0.46	-1.29	-2.24	-3.34	-4.59	-6.03	-7.66	-9.54	-11.70	-14.24	-17.29
40	-0.40	-0.45	-0.62	-0.89	-1.28	-1.78	-2.40	-3.15	-4.04	-5.07	-6.27	-7.65	-9.24	-11.08	-13.21	-15.74	-18.83	-22.81
42	-2.90	-2.96	-3.13	-3.43	-3.84	-4.38	-5.05	-5.87	-6.83	-7.97	-9.29	-10.82	-12.62	-14.72	-17.24	-20.36	-24.51	-31.55

VERAGE CRUSHED LENGTHS OF FOAM

	AB	BC	CD	DE	EF	FG	GH	HI	IJ	JK	KL	LM	MN	NO	OP	PQ	QR
02																	
24																	
46																	
68																	
810																	
012																	
214																	
416																	
618																	
820	12.08	12.00	11.84	11.59	11.26	10.85	10.35	9.76	9.08	8.30	7.41	6.42	5.31	4.07	2.70	1.17	-0.53
022	12.08	12.00	11.84	11.59	11.26	10.85	10.35	9.76	9.08	8.30	7.41	6.42	5.31	4.07	2.70	1.17	-0.53
224	12.08	12.00	11.84	11.59	11.26	10.85	10.35	9.76	9.08	8.30	7.41	6.42	5.31	4.07	2.70	1.17	-0.53
426	12.08	12.00	11.84	11.59	11.26	10.85	10.35	9.76	9.08	8.30	7.41	6.42	5.31	4.07	2.70	1.17	-0.53
628	12.08	12.00	11.84	11.59	11.26	10.85	10.35	9.76	9.08	8.30	7.41	6.42	5.31	4.07	2.70	1.17	-0.53
830	12.08	12.00	11.84	11.59	11.26	10.85	10.35	9.76	9.08	8.30	7.41	6.42	5.31	4.07	2.70	1.17	-0.53
032	10.83	10.75	10.58	10.33	9.99	9.57	9.05	8.45	7.74	6.93	6.02	4.99	3.84	2.56	1.13	-0.46	-2.25
234	8.33	8.24	8.06	7.80	7.44	6.99	6.45	5.81	5.06	4.20	3.22	2.12	0.89	-0.50	-2.05	-3.80	-5.77
436	5.83	5.73	5.55	5.27	4.89	4.41	3.83	3.15	2.35	1.43	0.39	-0.80	-2.14	-3.65	-5.36	-7.30	-9.53
638	3.33	3.23	3.03	2.73	2.33	1.82	1.20	0.47	-0.39	-1.37	-2.51	-3.79	-5.26	-6.93	-8.84	-11.04	-13.62
840	0.82	0.72	0.51	0.19	-0.24	-0.78	-1.45	-2.23	-3.16	-4.23	-5.46	-6.88	-8.50	-10.37	-12.55	-15.13	-18.29
042	-1.68	-1.79	-2.02	-2.36	-2.82	-3.40	-4.12	-4.97	-5.98	-7.15	-8.51	-10.08	-11.91	-14.06	-16.64	-19.86	-24.42

PERCENT CRUSH OF SECTION

	AB	BC	CD	DE	EF	FG	GH	HI	IJ	JK	KL	LM	MN	NO	OP	PQ	QR
02																	
24																	
46																	
68																	
810																	
1012																	
1214																	
1416																	
1618																	
1820	80%	80%	78%	76%	73%	70%	65%	61%	55%	49%	42%	35%	28%	20%	13%	5%	-2%
2022	80%	80%	78%	76%	73%	70%	65%	61%	55%	49%	42%	35%	28%	20%	13%	5%	-2%
2224	80%	80%	78%	76%	73%	70%	65%	61%	55%	49%	42%	35%	28%	20%	13%	5%	-2%
2426	80%	80%	78%	76%	73%	70%	65%	61%	55%	49%	42%	35%	28%	20%	13%	5%	-2%
2628	80%	80%	78%	76%	73%	70%	65%	61%	55%	49%	42%	35%	28%	20%	13%	5%	-2%
2830	80%	80%	78%	76%	73%	70%	65%	61%	55%	49%	42%	35%	28%	20%	13%	5%	-2%
3032	79%	78%	76%	74%	71%	67%	62%	57%	51%	45%	37%	30%	22%	14%	6%	-2%	-9%
3234	74%	73%	71%	68%	64%	60%	54%	48%	41%	33%	24%	15%	6%	-3%	-12%	-20%	-26%
3436	67%	65%	63%	59%	54%	48%	41%	33%	24%	14%	4%	-7%	-19%	-30%	-40%	-48%	-51%
3638	53%	51%	48%	43%	36%	28%	18%	7%	-6%	-19%	-33%	-48%	-63%	-77%	-89%	-97%	-95%
3840	22%	19%	13%	5%	-6%	-20%	-36%	-54%	-74%	-96%	-119%	-142%	-165%	-185%	-201%	-207%	-188%
4042	-134%	-143%	-160%	-185%	-218%	-259%	-307%	-361%	-420%	-484%	-550%	-616%	-678%	-733%	-769%	-771%	-677%

ENERGY ABSORBED /IN^3

	AB	BC	CD	DE	EF	FG	GH	HI	IJ	JK	KL	LM	MN	NO	OP	PQ	QR
02																	
24																	
46																	
68																	
810																	
1012																	
1214																	
1416																	
1618																	
1820	1.45	1.45	1.31	1.19	1.04	0.92	0.76	0.66	0.54	0.45	0.36	0.28	0.21	0.14	0.08	0.02	0.00
2022	1.45	1.45	1.31	1.19	1.04	0.92	0.76	0.66	0.54	0.45	0.36	0.28	0.21	0.14	0.08	0.02	0.00
2224	1.45	1.45	1.31	1.19	1.04	0.92	0.76	0.66	0.54	0.45	0.36	0.28	0.21	0.14	0.08	0.02	0.00
2426	1.45	1.45	1.31	1.19	1.04	0.92	0.76	0.66	0.54	0.45	0.36	0.28	0.21	0.14	0.08	0.02	0.00
2628	1.45	1.45	1.31	1.19	1.04	0.92	0.76	0.66	0.54	0.45	0.36	0.28	0.21	0.14	0.08	0.02	0.00
2830	1.45	1.45	1.31	1.19	1.04	0.92	0.76	0.66	0.54	0.45	0.36	0.28	0.21	0.14	0.08	0.02	0.00
3032	1.38	1.31	1.19	1.09	0.96	0.82	0.68	0.58	0.48	0.39	0.30	0.23	0.15	0.08	0.02	0.00	0.00
3234	1.09	1.04	0.96	0.85	0.73	0.63	0.52	0.43	0.34	0.26	0.17	0.09	0.02	0.00	0.00	0.00	0.00
3436	0.82	0.76	0.70	0.61	0.52	0.43	0.34	0.26	0.17	0.08	0.01	0.00	0.00	0.00	0.00	0.00	0.00
3638	0.51	0.48	0.43	0.37	0.29	0.21	0.12	0.03	0.00	0.00	0.00	0.00	0.00	0.00	0.00	0.00	0.00
3840	0.15	0.13	0.08	0.03	0.00	0.00	0.00	0.00	0.00	0.00	0.00	0.00	0.00	0.00	0.00	0.00	0.00
4042	0.00	0.00	0.00	0.00	0.00	0.00	0.00	0.00	0.00	0.00	0.00	0.00	0.00	0.00	0.00	0.00	0.00

TOTAL ENERGY ABSORBED/FOAM SECTION

	AB	BC	CD	DE	EF	FG	GH	HI	IJ	JK	KL	LM	MN	NO	OP	PQ	QR
02																	
24																	
46																	
68																	
810																	
1012																	
1214																	
1416																	
1618																	
1820	87.05	87.26	79.21	72.47	63.96	57.29	48.07	42.54	35.59	30.46	25.15	20.31	15.94	11.23	6.88	1.89	0.00
2022	87.05	87.26	79.21	72.47	63.96	57.29	48.07	42.54	35.59	30.46	25.15	20.31	15.94	11.23	6.88	1.89	0.00
2224	87.05	87.26	79.21	72.47	63.96	57.29	48.07	42.54	35.59	30.46	25.15	20.31	15.94	11.23	6.88	1.89	0.00
2426	87.05	87.26	79.21	72.47	63.96	57.29	48.07	42.54	35.59	30.46	25.15	20.31	15.94	11.23	6.88	1.89	0.00
2628	87.05	87.26	79.21	72.47	63.96	57.29	48.07	42.54	35.59	30.46	25.15	20.31	15.94	11.23	6.88	1.89	0.00
2830	87.05	87.26	79.21	72.47	63.96	57.29	48.07	42.54	35.59	30.46	25.15	20.31	15.94	11.23	6.88	1.89	0.00
3032	75.95	72.27	65.97	60.87	54.15	46.85	39.48	34.33	29.07	24.28	19.29	15.38	10.51	5.93	1.59	0.00	0.00
3234	49.08	46.95	43.56	38.87	33.74	29.52	24.78	20.91	16.94	13.34	9.03	4.98	1.16	0.00	0.00	0.00	0.00
3436	28.72	26.69	24.72	21.72	18.72	15.71	12.64	9.88	6.63	3.22	0.42	0.00	0.00	0.00	0.00	0.00	0.00
3638	12.76	12.04	10.85	9.42	7.47	5.49	3.20	0.82	0.00	0.00	0.00	0.00	0.00	0.00	0.00	0.00	0.00
3840	2.25	1.96	1.21	0.46	0.00	0.00	0.00	0.00	0.00	0.00	0.00	0.00	0.00	0.00	0.00	0.00	0.00
4042	0.00	0.00	0.00	0.00	0.00	0.00	0.00	0.00	0.00	0.00	0.00	0.00	0.00	0.00	0.00	0.00	0.00

TOTAL ENERGY ABSORBED= 18209.3 in-kips

CALCULATION OF G-LOADS (MAXIMUM)

	AB	BC	CD	DE	EF	FG	GH	HI	IJ	JK	KL	LM	MN	NO	OP	PQ	QR
02																	
24																	
46																	
68																	
810																	
1012																	
1214																	
1416																	
1618																	
1820	6.77	6.77	6.11	5.44	4.45	3.54	2.75	2.11	1.71	1.40	1.18	1.04	0.94	0.86	0.85	0.54	0.00
2022	6.77	6.77	6.11	5.44	4.45	3.54	2.75	2.11	1.71	1.40	1.18	1.04	0.94	0.86	0.85	0.54	0.00
2224	6.77	6.77	6.11	5.44	4.45	3.54	2.75	2.11	1.71	1.40	1.18	1.04	0.94	0.86	0.85	0.54	0.00
2426	6.77	6.77	6.11	5.44	4.45	3.54	2.75	2.11	1.71	1.40	1.18	1.04	0.94	0.86	0.85	0.54	0.00
2628	6.77	6.77	6.11	5.44	4.45	3.54	2.75	2.11	1.71	1.40	1.18	1.04	0.94	0.86	0.85	0.54	0.00
2830	6.77	6.77	6.11	5.44	4.45	3.54	2.75	2.11	1.71	1.40	1.18	1.04	0.94	0.86	0.85	0.54	0.00
3032	6.44	6.11	5.44	4.78	3.79	3.07	2.27	1.83	1.47	1.27	1.07	0.96	0.88	0.85	0.62	0.00	0.00
3234	4.78	4.45	3.79	3.23	2.59	2.00	1.65	1.37	1.14	1.00	0.90	0.85	0.62	0.00	0.00	0.00	0.00
3436	3.07	2.75	2.43	1.95	1.65	1.37	1.14	1.00	0.90	0.85	0.42	0.00	0.00	0.00	0.00	0.00	0.00
3638	1.59	1.47	1.37	1.21	1.05	0.94	0.86	0.67	0.00	0.00	0.00	0.00	0.00	0.00	0.00	0.00	0.00
3840	0.88	0.86	0.85	0.54	0.00	0.00	0.00	0.00	0.00	0.00	0.00	0.00	0.00	0.00	0.00	0.00	0.00
4042	0.00	0.00	0.00	0.00	0.00	0.00	0.00	0.00	0.00	0.00	0.00	0.00	0.00	0.00	0.00	0.00	0.00

MAXIMUM INERTIA (G) LOAD---------- 106.0

SIDEDROP CASE I-MAXIMUM DECELERATION
LAST-A-FOAM FR-3718.25

UNCRUSHED LENGTH OF FOAM

OUTSIDE RADIUS=49.50

	0.00 A	2.00 B	4.00 C	6.00 D	8.00 E	10.00 F	12.00 G	14.00 H	16.00 I	18.00 J	20.00 K	22.00 L	24.00 M	26.00 N	28.00 O	30.00 P	32.00 Q	34.00 R
0	27.00	27.05	27.20	27.45	27.82	28.32	28.99	29.87	31.02	32.61	34.97	39.63	86.59	84.24	81.64	78.75	75.53	71.95
2	29.00	29.06	29.23	29.53	29.97	30.58	31.40	32.50	34.03	36.30	40.78	88.68	86.59	84.24	81.64	78.75	75.53	71.95
4	31.00	31.07	31.28	31.64	32.17	32.91	33.94	35.39	37.56	41.84	90.56	88.68	86.59	84.24	81.64	78.75	75.53	71.95
6	33.00	33.08	33.33	33.76	34.42	35.35	36.70	38.75	42.81	92.22	90.56	88.68	86.59	84.24	81.64	78.75	75.53	71.95
8	35.00	35.10	35.40	35.93	36.76	37.98	39.88	43.70	93.69	92.22	90.56	88.68	86.59	84.24	81.64	78.75	75.53	71.95
10	37.00	37.12	37.50	38.17	39.24	40.98	44.52	94.96	93.69	92.22	90.56	88.68	86.59	84.24	81.64	78.75	75.53	71.95
12	39.00	39.15	39.63	40.52	42.05	45.28	96.05	94.96	93.69	92.22	90.56	88.68	86.59	84.24	81.64	78.75	75.53	71.95
14	41.00	41.20	41.84	43.11	45.98	96.96	96.05	94.96	93.69	92.22	90.56	88.68	86.59	84.24	81.64	78.75	75.53	71.95
16	43.00	43.27	44.21	46.64	97.70	96.96	96.05	94.96	93.69	92.22	90.56	88.68	86.59	84.24	81.64	78.75	75.53	71.95
18	45.00	45.43	47.28	98.27	97.70	96.96	96.05	94.96	93.69	92.22	90.56	88.68	86.59	84.24	81.64	78.75	75.53	71.95
18	15.00	15.02	15.07	15.16	15.29	15.46	15.68	15.95	16.28	16.68	17.17	17.77	18.51	19.44	20.66	22.34	24.87	30.12
20	15.00	15.02	15.07	15.16	15.29	15.46	15.68	15.95	16.28	16.68	17.17	17.77	18.51	19.44	20.66	22.34	24.87	30.12
22	15.00	15.02	15.07	15.16	15.29	15.46	15.68	15.95	16.28	16.68	17.17	17.77	18.51	19.44	20.66	22.34	24.87	30.12
24	15.00	15.02	15.07	15.16	15.29	15.46	15.68	15.95	16.28	16.68	17.17	17.77	18.51	19.44	20.66	22.34	24.87	30.12
26	15.00	15.02	15.07	15.16	15.29	15.46	15.68	15.95	16.28	16.68	17.17	17.77	18.51	19.44	20.66	22.34	24.87	30.12
28	15.00	15.02	15.07	15.16	15.29	15.46	15.68	15.95	16.28	16.68	17.17	17.77	18.51	19.44	20.66	22.34	24.87	30.12
30	15.00	15.02	15.07	15.16	15.29	15.46	15.68	15.95	16.28	16.68	17.17	17.77	18.51	19.44	20.66	22.34	24.87	30.12
32	12.50	12.52	12.56	12.64	12.75	12.90	13.10	13.33	13.63	13.98	14.42	14.96	15.63	16.48	17.59	19.14	21.53	26.60
34	10.00	10.01	10.05	10.12	10.22	10.34	10.51	10.71	10.96	11.26	11.64	12.11	12.69	13.44	14.43	15.83	18.03	22.86
36	7.50	7.51	7.54	7.59	7.67	7.77	7.90	8.07	8.27	8.52	8.82	9.20	9.68	10.31	11.15	12.36	14.31	18.81
38	5.00	5.01	5.03	5.07	5.12	5.19	5.29	5.40	5.55	5.73	5.95	6.23	6.59	7.06	7.71	8.66	10.26	14.25
40	2.50	2.50	2.52	2.54	2.57	2.60	2.65	2.72	2.80	2.89	3.02	3.17	3.38	3.65	4.03	4.62	5.68	8.74
42	0.00	0.00	0.00	0.00	0.00	0.00	0.00	0.00	0.00	0.00	0.00	0.00	0.00	0.00	0.00	0.00	0.00	0.00

AVERAGE UNCRUSHED LENGTHS OF FOAM

	AB	BC	CD	DE	EF	FG	GH	HI	IJ	JK	KL	LM	MN	NO	OP	PQ	QR
02	28.03	28.13	28.35	28.69	29.18	29.83	30.69	31.85	33.49	36.17	51.02	75.37	85.41	82.94	80.19	77.14	73.74
24	30.03	30.16	30.42	30.83	31.41	32.21	33.31	34.87	37.43	52.37	77.18	87.64	85.41	82.94	80.19	77.14	73.74
46	32.04	32.19	32.50	33.00	33.71	34.73	36.19	38.62	53.61	78.80	89.62	87.64	85.41	82.94	80.19	77.14	73.74
68	34.04	34.23	34.61	35.22	36.13	37.48	39.76	54.74	80.24	91.39	89.62	87.64	85.41	82.94	80.19	77.14	73.74
810	36.05	36.28	36.75	37.53	38.74	40.84	55.77	81.51	92.95	91.39	89.62	87.64	85.41	82.94	80.19	77.14	73.74
1012	38.07	38.35	38.95	40.00	41.89	56.71	82.62	94.32	92.95	91.39	89.62	87.64	85.41	82.94	80.19	77.14	73.74
1214	40.09	40.45	41.28	42.91	57.57	83.58	95.50	94.32	92.95	91.39	89.62	87.64	85.41	82.94	80.19	77.14	73.74
1416	42.12	42.63	43.95	58.36	84.40	96.50	95.50	94.32	92.95	91.39	89.62	87.64	85.41	82.94	80.19	77.14	73.74
1618	44.18	45.05	59.10	85.08	97.33	96.50	95.50	94.32	92.95	91.39	89.62	87.64	85.41	82.94	80.19	77.14	73.74
1820	15.01	15.04	15.12	15.23	15.38	15.57	15.81	16.11	16.48	16.92	17.47	18.14	18.98	20.05	21.50	23.60	27.50
2022	15.01	15.04	15.12	15.23	15.38	15.57	15.81	16.11	16.48	16.92	17.47	18.14	18.98	20.05	21.50	23.60	27.50
2224	15.01	15.04	15.12	15.23	15.38	15.57	15.81	16.11	16.48	16.92	17.47	18.14	18.98	20.05	21.50	23.60	27.50
2426	15.01	15.04	15.12	15.23	15.38	15.57	15.81	16.11	16.48	16.92	17.47	18.14	18.98	20.05	21.50	23.60	27.50
2628	15.01	15.04	15.12	15.23	15.38	15.57	15.81	16.11	16.48	16.92	17.47	18.14	18.98	20.05	21.50	23.60	27.50
2830	15.01	15.04	15.12	15.23	15.38	15.57	15.81	16.11	16.48	16.92	17.47	18.14	18.98	20.05	21.50	23.60	27.50
3032	13.76	13.79	13.86	13.96	14.10	14.28	14.51	14.80	15.14	15.56	16.08	16.71	17.51	18.54	19.93	21.97	25.78
3234	11.26	11.29	11.34	11.43	11.55	11.71	11.91	12.16	12.46	12.83	13.28	13.84	14.56	15.48	16.75	18.63	22.25
3436	8.76	8.78	8.83	8.90	9.00	9.13	9.30	9.50	9.75	10.06	10.44	10.92	11.53	12.33	13.44	15.13	18.50
3638	6.25	6.27	6.31	6.36	6.44	6.54	6.67	6.82	7.01	7.25	7.55	7.93	8.41	9.06	9.97	11.40	14.41
3840	3.75	3.76	3.79	3.82	3.87	3.93	4.02	4.12	4.24	4.40	4.59	4.84	5.17	5.61	6.25	7.31	9.73
4042	1.25	1.25	1.26	1.28	1.29	1.31	1.34	1.38	1.42	1.48	1.55	1.64	1.76	1.92	2.16	2.58	3.61

CRUSHED LENGTHS OF FOAM

DEFLECTION= 8.15 OUTSIDE RADIUS= 49.50

X/	0.00	2.00	4.00	6.00	8.00	10.00	12.00	14.00	16.00	18.00	20.00	22.00	24.00	26.00	28.00	30.00	32.00	34.00
	A	B	C	D	E	F	G	H	I	J	K	L	M	N	O	P	Q	R
Y																		
0	8.15	8.11	7.99	7.79	7.50	7.13	6.67	6.13	5.49	4.76	3.93	2.99	1.94	0.77	-0.53	-1.98	-3.58	-5.37
2	8.15	8.11	7.99	7.79	7.50	7.13	6.67	6.13	5.49	4.76	3.93	2.99	1.94	0.77	-0.53	-1.98	-3.58	-5.37
4	8.15	8.11	7.99	7.79	7.50	7.13	6.67	6.13	5.49	4.76	3.93	2.99	1.94	0.77	-0.53	-1.98	-3.58	-5.37
6	8.15	8.11	7.99	7.79	7.50	7.13	6.67	6.13	5.49	4.76	3.93	2.99	1.94	0.77	-0.53	-1.98	-3.58	-5.37
8	8.15	8.11	7.99	7.79	7.50	7.13	6.67	6.13	5.49	4.76	3.93	2.99	1.94	0.77	-0.53	-1.98	-3.58	-5.37
10	8.15	8.11	7.99	7.79	7.50	7.13	6.67	6.13	5.49	4.76	3.93	2.99	1.94	0.77	-0.53	-1.98	-3.58	-5.37
12	8.15	8.11	7.99	7.79	7.50	7.13	6.67	6.13	5.49	4.76	3.93	2.99	1.94	0.77	-0.53	-1.98	-3.58	-5.37
14	8.15	8.11	7.99	7.79	7.50	7.13	6.67	6.13	5.49	4.76	3.93	2.99	1.94	0.77	-0.53	-1.98	-3.58	-5.37
16	8.15	8.11	7.99	7.79	7.50	7.13	6.67	6.13	5.49	4.76	3.93	2.99	1.94	0.77	-0.53	-1.98	-3.58	-5.37
18	8.15	8.11	7.99	7.79	7.50	7.13	6.67	6.13	5.49	4.76	3.93	2.99	1.94	0.77	-0.53	-1.98	-3.58	-5.37
20	8.15	8.11	7.99	7.79	7.50	7.13	6.67	6.13	5.49	4.76	3.93	2.99	1.94	0.77	-0.53	-1.98	-3.58	-5.37
22	8.15	8.11	7.99	7.79	7.50	7.13	6.67	6.13	5.49	4.76	3.93	2.99	1.94	0.77	-0.53	-1.98	-3.58	-5.37
24	8.15	8.11	7.99	7.79	7.50	7.13	6.67	6.13	5.49	4.76	3.93	2.99	1.94	0.77	-0.53	-1.98	-3.58	-5.37
26	8.15	8.11	7.99	7.79	7.50	7.13	6.67	6.13	5.49	4.76	3.93	2.99	1.94	0.77	-0.53	-1.98	-3.58	-5.37
28	8.15	8.11	7.99	7.79	7.50	7.13	6.67	6.13	5.49	4.76	3.93	2.99	1.94	0.77	-0.53	-1.98	-3.58	-5.37
30	8.15	8.11	7.99	7.79	7.50	7.13	6.67	6.13	5.49	4.76	3.93	2.99	1.94	0.77	-0.53	-1.98	-3.58	-5.37
32	5.65	5.61	5.48	5.27	4.96	4.57	4.09	3.52	2.84	2.07	1.18	0.18	-0.94	-2.20	-3.60	-5.17	-6.93	-8.90
34	3.15	3.11	2.97	2.74	2.42	2.01	1.50	0.89	0.17	-0.65	-1.60	-2.67	-3.88	-5.24	-6.76	-8.48	-10.43	-12.64
36	0.65	0.60	0.46	0.22	-0.12	-0.56	-1.10	-1.75	-2.52	-3.40	-4.42	-5.57	-6.88	-8.37	-10.05	-11.96	-14.15	-16.69
38	-1.85	-1.90	-2.05	-2.31	-2.67	-3.14	-3.72	-4.41	-5.24	-6.19	-7.29	-8.54	-9.98	-11.61	-13.49	-15.65	-18.19	-21.24
40	-4.35	-4.40	-4.57	-4.84	-5.23	-5.73	-6.35	-7.10	-7.99	-9.02	-10.22	-11.60	-13.19	-15.03	-17.16	-19.69	-22.78	-26.76
42	-6.85	-6.91	-7.08	-7.38	-7.79	-8.33	-9.00	-9.82	-10.78	-11.92	-13.24	-14.77	-16.57	-18.67	-21.19	-24.31	-28.46	-35.50

AVERAGE CRUSHED LENGTHS OF FOAM

	AB	BC	CD	DE	EF	FG	GH	HI	IJ	JK	KL	LM	MN	NO	OP	PQ	QR
02	8.13	8.05	7.89	7.64	7.31	6.90	6.40	5.81	5.13	4.35	3.46	2.47	1.36	0.12	-1.25	-2.78	-4.48
24	8.13	8.05	7.89	7.64	7.31	6.90	6.40	5.81	5.13	4.35	3.46	2.47	1.36	0.12	-1.25	-2.78	-4.48
46	8.13	8.05	7.89	7.64	7.31	6.90	6.40	5.81	5.13	4.35	3.46	2.47	1.36	0.12	-1.25	-2.78	-4.48
68	8.13	8.05	7.89	7.64	7.31	6.90	6.40	5.81	5.13	4.35	3.46	2.47	1.36	0.12	-1.25	-2.78	-4.48
810	8.13	8.05	7.89	7.64	7.31	6.90	6.40	5.81	5.13	4.35	3.46	2.47	1.36	0.12	-1.25	-2.78	-4.48
1012	8.13	8.05	7.89	7.64	7.31	6.90	6.40	5.81	5.13	4.35	3.46	2.47	1.36	0.12	-1.25	-2.78	-4.48
1214	8.13	8.05	7.89	7.64	7.31	6.90	6.40	5.81	5.13	4.35	3.46	2.47	1.36	0.12	-1.25	-2.78	-4.48
1416	8.13	8.05	7.89	7.64	7.31	6.90	6.40	5.81	5.13	4.35	3.46	2.47	1.36	0.12	-1.25	-2.78	-4.48
1618	8.13	8.05	7.89	7.64	7.31	6.90	6.40	5.81	5.13	4.35	3.46	2.47	1.36	0.12	-1.25	-2.78	-4.48
1820	8.13	8.05	7.89	7.64	7.31	6.90	6.40	5.81	5.13	4.35	3.46	2.47	1.36	0.12	-1.25	-2.78	-4.48
2022	8.13	8.05	7.89	7.64	7.31	6.90	6.40	5.81	5.13	4.35	3.46	2.47	1.36	0.12	-1.25	-2.78	-4.48
2224	8.13	8.05	7.89	7.64	7.31	6.90	6.40	5.81	5.13	4.35	3.46	2.47	1.36	0.12	-1.25	-2.78	-4.48
2426	8.13	8.05	7.89	7.64	7.31	6.90	6.40	5.81	5.13	4.35	3.46	2.47	1.36	0.12	-1.25	-2.78	-4.48
2628	8.13	8.05	7.89	7.64	7.31	6.90	6.40	5.81	5.13	4.35	3.46	2.47	1.36	0.12	-1.25	-2.78	-4.48
2830	8.13	8.05	7.89	7.64	7.31	6.90	6.40	5.81	5.13	4.35	3.46	2.47	1.36	0.12	-1.25	-2.78	-4.48
3032	6.88	6.80	6.63	6.38	6.04	5.62	5.10	4.50	3.79	2.98	2.07	1.04	-0.11	-1.39	-2.82	-4.41	-6.20
3234	4.38	4.29	4.11	3.85	3.49	3.04	2.50	1.86	1.11	0.25	-0.73	-1.83	-3.06	-4.45	-6.00	-7.75	-9.72
3436	1.88	1.78	1.60	1.32	0.94	0.46	-0.12	-0.80	-1.60	-2.52	-3.56	-4.75	-6.09	-7.60	-9.31	-11.25	-13.48
3638	-0.62	-0.72	-0.92	-1.22	-1.62	-2.13	-2.75	-3.48	-4.34	-5.32	-6.46	-7.74	-9.21	-10.88	-12.79	-14.99	-17.57
3840	-3.13	-3.23	-3.44	-3.76	-4.19	-4.73	-5.40	-6.18	-7.11	-8.18	-9.41	-10.83	-12.45	-14.32	-16.50	-19.08	-22.24
4042	-5.63	-5.74	-5.97	-6.31	-6.77	-7.35	-8.07	-8.92	-9.93	-11.10	-12.46	-14.03	-15.86	-18.01	-20.59	-23.81	-28.37

TOTAL ENERGY ABSORBED/FOAM SECTION

	AB	BC	CD	DE	EF	FG	GH	HI	IJ	JK	KL	LM	MN	NO	OP	PQ	QR
02	33.63	33.76	31.76	30.99	28.01	26.25	23.32	20.39	16.08	13.02	6.12	3.01	0.00	0.00	0.00	0.00	0.00
24	32.43	32.57	31.64	29.59	27.64	24.48	22.65	20.92	16.47	8.38	3.09	3.51	0.00	0.00	0.00	0.00	0.00
46	30.76	30.90	29.90	29.04	28.32	25.00	23.16	18.54	12.87	6.30	3.58	3.51	0.00	0.00	0.00	0.00	0.00
68	31.32	31.49	30.45	29.58	26.01	19.49	20.67	17.52	6.42	7.31	3.58	3.51	0.00	0.00	0.00	0.00	0.00
810	31.73	30.47	27.93	27.02	26.34	24.50	17.85	9.78	7.44	7.31	3.58	3.51	0.00	0.00	0.00	0.00	0.00
1012	28.93	29.15	28.05	27.20	25.13	20.41	13.22	7.55	7.44	7.31	3.58	3.51	0.00	0.00	0.00	0.00	0.00
1214	28.86	29.13	28.07	27.47	23.03	13.37	11.46	7.55	7.44	7.31	3.58	3.51	0.00	0.00	0.00	0.00	0.00
1416	28.64	28.99	28.13	23.34	16.88	11.58	11.46	7.55	7.44	7.31	3.58	3.51	0.00	0.00	0.00	0.00	0.00
1618	28.27	28.83	23.64	17.02	15.57	11.58	11.46	7.55	7.44	7.31	3.58	3.51	0.00	0.00	0.00	0.00	0.00
1820	45.03	45.13	42.32	39.59	37.52	33.01	29.09	25.78	21.75	17.60	12.58	7.98	0.00	0.00	0.00	0.00	0.00
2022	45.03	45.13	42.32	39.59	37.52	33.01	29.09	25.78	21.75	17.60	12.58	7.98	2.28	0.00	0.00	0.00	0.00
2224	45.03	45.13	42.32	39.59	37.52	33.01	29.09	25.78	21.75	17.60	12.58	7.98	2.28	0.00	0.00	0.00	0.00
2426	45.03	45.13	42.32	39.59	37.52	33.01	29.09	25.78	21.75	17.60	12.58	7.98	2.28	0.00	0.00	0.00	0.00
2628	45.03	45.13	42.32	39.59	37.52	33.01	29.09	25.78	21.75	17.60	12.58	7.98	2.28	0.00	0.00	0.00	0.00
2830	45.03	45.13	42.32	39.59	37.52	33.01	29.09	25.78	21.75	17.60	12.58	7.98	2.28	0.00	0.00	0.00	0.00
3032	35.77	34.75	33.82	31.83	29.33	26.28	22.64	18.35	14.54	10.58	6.43	1.34	0.00	0.00	0.00	0.00	0.00
3234	19.36	19.41	18.15	16.01	14.33	12.18	9.05	5.84	1.99	0.00	0.00	0.00	0.00	0.00	0.00	0.00	0.00
3436	6.65	6.32	5.65	3.92	2.16	0.73	0.00	0.00	0.00	0.00	0.00	0.00	0.00	0.00	0.00	0.00	0.00
3638	0.00	0.00	0.00	0.00	0.00	0.00	0.00	0.00	0.00	0.00	0.00	0.00	0.00	0.00	0.00	0.00	0.00
3840	0.00	0.00	0.00	0.00	0.00	0.00	0.00	0.00	0.00	0.00	0.00	0.00	0.00	0.00	0.00	0.00	0.00
4042	0.00	0.00	0.00	0.00	0.00	0.00	0.00	0.00	0.00	0.00	0.00	0.00	0.00	0.00	0.00	0.00	0.00

TOTAL ENERGY ABSORBED= 18023.4 in-kips

CALCULATION OF G-LOADS (MAXIMUM)

	AB	BC	CD	DE	EF	FG	GH	HI	IJ	JK	KL	LM	MN	NO	OP	PQ	QR
02	1.38	1.38	1.36	1.34	1.29	1.25	1.21	1.19	1.17	1.16	0.84	0.35	0.21	0.00	0.00	0.00	0.00
24	1.34	1.34	1.31	1.29	1.25	1.21	1.19	1.18	1.17	0.93	0.49	0.35	0.21	0.00	0.00	0.00	0.00
46	1.29	1.29	1.27	1.25	1.23	1.20	1.19	1.17	1.11	0.75	0.49	0.35	0.21	0.00	0.00	0.00	0.00
68	1.27	1.27	1.25	1.23	1.20	1.19	1.18	1.15	0.75	0.63	0.49	0.35	0.21	0.00	0.00	0.00	0.00
810	1.25	1.23	1.21	1.20	1.19	1.18	1.15	0.84	0.75	0.63	0.49	0.35	0.21	0.00	0.00	0.00	0.00
1012	1.21	1.21	1.20	1.19	1.18	1.16	0.97	0.75	0.75	0.63	0.49	0.35	0.21	0.00	0.00	0.00	0.00
1214	1.20	1.20	1.19	1.19	1.16	0.93	0.84	0.75	0.75	0.63	0.49	0.35	0.21	0.00	0.00	0.00	0.00
1416	1.19	1.19	1.19	1.16	1.02	0.84	0.84	0.75	0.75	0.63	0.49	0.35	0.21	0.00	0.00	0.00	0.00
1618	1.19	1.19	1.16	1.02	0.93	0.84	0.84	0.75	0.75	0.63	0.49	0.35	0.21	0.00	0.00	0.00	0.00
1820	2.51	2.51	2.29	2.09	2.00	1.81	1.63	1.54	1.42	1.31	1.20	1.17	0.84	0.01	0.00	0.00	0.00
2022	2.51	2.51	2.29	2.09	2.00	1.81	1.63	1.54	1.42	1.31	1.20	1.17	0.84	0.01	0.00	0.00	0.00
2224	2.51	2.51	2.29	2.09	2.00	1.81	1.63	1.54	1.42	1.31	1.20	1.17	0.84	0.01	0.00	0.00	0.00
2426	2.51	2.51	2.29	2.09	2.00	1.81	1.63	1.54	1.42	1.31	1.20	1.17	0.84	0.01	0.00	0.00	0.0
2628	2.51	2.51	2.29	2.09	2.00	1.81	1.63	1.54	1.42	1.31	1.20	1.17	0.84	0.01	0.00	0.00	0.0
2830	2.51	2.51	2.29	2.09	2.00	1.81	1.63	1.54	1.42	1.31	1.20	1.17	0.84	0.01	0.00	0.00	0.0
3032	2.09	2.04	2.00	1.90	1.76	1.61	1.51	1.40	1.29	1.19	1.16	0.75	0.00	0.00	0.00	0.00	0.0
3234	1.61	1.59	1.54	1.49	1.40	1.31	1.21	1.17	1.02	0.21	0.00	0.00	0.00	0.00	0.00	0.00	0.0
3436	1.21	1.20	1.19	1.17	1.11	0.63	0.00	0.00	0.00	0.00	0.00	0.00	0.00	0.00	0.00	0.00	0.0
3638	0.00	0.00	0.00	0.00	0.00	0.00	0.00	0.00	0.00	0.00	0.00	0.00	0.00	0.00	0.00	0.00	0.
3840	0.00	0.00	0.00	0.00	0.00	0.00	0.00	0.00	0.00	0.00	0.00	0.00	0.00	0.00	0.00	0.00	0.
4042	0.00	0.00	0.00	0.00	0.00	0.00	0.00	0.00	0.00	0.00	0.00	0.00	0.00	0.00	0.00	0.00	0.

MAXIMUM INERTIA (G) LOAD---------- 89.3

PERCENT CRUSH OF SECTION

	AB	BC	CD	DE	EF	FG	GH	HI	IJ	JK	KL	LM	MN	NO	OP	PQ	QR
02	29%	29%	28%	27%	25%	23%	21%	18%	15%	12%	7%	3%	2%	0%	-2%	-4%	-6%
24	27%	27%	26%	25%	23%	21%	19%	17%	14%	8%	4%	3%	2%	0%	-2%	-4%	-6%
46	25%	25%	24%	23%	22%	20%	18%	15%	10%	6%	4%	3%	2%	0%	-2%	-4%	-6%
68	24%	24%	23%	22%	20%	18%	16%	11%	6%	5%	4%	3%	2%	0%	-2%	-4%	-6%
810	23%	22%	21%	20%	19%	17%	11%	7%	6%	5%	4%	3%	2%	0%	-2%	-4%	-6%
1012	21%	21%	20%	19%	17%	12%	8%	6%	6%	5%	4%	3%	2%	0%	-2%	-4%	-6%
1214	20%	20%	19%	18%	13%	8%	7%	6%	6%	5%	4%	3%	2%	0%	-2%	-4%	-6%
1416	19%	19%	18%	13%	9%	7%	7%	6%	6%	5%	4%	3%	2%	0%	-2%	-4%	-6%
1618	18%	18%	13%	9%	8%	7%	7%	6%	6%	5%	4%	3%	2%	0%	-2%	-4%	-6%
1820	54%	54%	52%	50%	48%	44%	40%	36%	31%	26%	20%	14%	7%	1%	-6%	-12%	-16%
2022	54%	54%	52%	50%	48%	44%	40%	36%	31%	26%	20%	14%	7%	1%	-6%	-12%	-16%
2224	54%	54%	52%	50%	48%	44%	40%	36%	31%	26%	20%	14%	7%	1%	-6%	-12%	-16%
2426	54%	54%	52%	50%	48%	44%	40%	36%	31%	26%	20%	14%	7%	1%	-6%	-12%	-16%
2628	54%	54%	52%	50%	48%	44%	40%	36%	31%	26%	20%	14%	7%	1%	-6%	-12%	-16%
2830	54%	54%	52%	50%	48%	44%	40%	36%	31%	26%	20%	14%	7%	1%	-6%	-12%	-16%
3032	50%	49%	48%	46%	43%	39%	35%	30%	25%	19%	13%	6%	-1%	-7%	-14%	-20%	-24%
3234	39%	38%	36%	34%	30%	26%	21%	15%	9%	2%	-5%	-13%	-21%	-29%	-36%	-42%	-44%
3436	21%	20%	18%	15%	10%	5%	-1%	-8%	-16%	-25%	-34%	-43%	-53%	-62%	-69%	-74%	-73%
3638	-10%	-12%	-15%	-19%	-25%	-33%	-41%	-51%	-62%	-73%	-85%	-98%	-110%	-120%	-128%	-132%	-122%
3840	-83%	-86%	-91%	-98%	-108%	-120%	-134%	-150%	-168%	-186%	-205%	-224%	-241%	-255%	-264%	-261%	-228%
4042	-450%	-457%	-472%	-495%	-524%	-559%	-601%	-647%	-698%	-751%	-805%	-857%	-903%	-938%	-952%	-925%	-787%

ENERGY ABSORBED /IN^3

	AB	BC	CD	DE	EF	FG	GH	HI	IJ	JK	KL	LM	MN	NO	OP	PQ	QR
02	0.30	0.30	0.28	0.27	0.24	0.22	0.19	0.16	0.12	0.09	0.03	0.01	0.00	0.00	0.00	0.00	0.00
24	0.27	0.27	0.26	0.24	0.22	0.19	0.17	0.15	0.11	0.04	0.01	0.01	0.00	0.00	0.00	0.00	0.00
46	0.24	0.24	0.23	0.22	0.21	0.18	0.16	0.12	0.06	0.02	0.01	0.01	0.00	0.00	0.00	0.00	0.00
68	0.23	0.23	0.22	0.21	0.18	0.13	0.13	0.08	0.02	0.02	0.01	0.01	0.00	0.00	0.00	0.00	0.00
810	0.22	0.21	0.19	0.18	0.17	0.15	0.08	0.03	0.02	0.02	0.01	0.01	0.00	0.00	0.00	0.00	0.00
1012	0.19	0.19	0.18	0.17	0.15	0.09	0.04	0.02	0.02	0.02	0.01	0.01	0.00	0.00	0.00	0.00	0.00
1214	0.18	0.18	0.17	0.16	0.10	0.04	0.03	0.02	0.02	0.02	0.01	0.01	0.00	0.00	0.00	0.00	0.00
1416	0.17	0.17	0.16	0.10	0.05	0.03	0.03	0.02	0.02	0.02	0.01	0.01	0.00	0.00	0.00	0.00	0.00
1618	0.16	0.16	0.10	0.05	0.04	0.03	0.03	0.02	0.02	0.02	0.01	0.01	0.00	0.00	0.00	0.00	0.00
1820	0.75	0.75	0.70	0.65	0.61	0.53	0.46	0.40	0.33	0.26	0.18	0.11	0.00	0.00	0.00	0.00	0.00
2022	0.75	0.75	0.70	0.65	0.61	0.53	0.46	0.40	0.33	0.26	0.18	0.11	0.03	0.00	0.00	0.00	0.00
2224	0.75	0.75	0.70	0.65	0.61	0.53	0.46	0.40	0.33	0.26	0.18	0.11	0.03	0.00	0.00	0.00	0.00
2426	0.75	0.75	0.70	0.65	0.61	0.53	0.46	0.40	0.33	0.26	0.18	0.11	0.03	0.00	0.00	0.00	0.00
2628	0.75	0.75	0.70	0.65	0.61	0.53	0.46	0.40	0.33	0.26	0.18	0.11	0.03	0.00	0.00	0.00	0.00
2830	0.75	0.75	0.70	0.65	0.61	0.53	0.46	0.40	0.33	0.26	0.18	0.11	0.03	0.00	0.00	0.00	0.00
3032	0.65	0.63	0.61	0.57	0.52	0.46	0.39	0.31	0.24	0.17	0.10	0.02	0.00	0.00	0.00	0.00	0.00
3234	0.43	0.43	0.40	0.35	0.31	0.26	0.19	0.12	0.04	0.00	0.00	0.00	0.00	0.00	0.00	0.00	0.00
3436	0.19	0.18	0.16	0.11	0.06	0.02	0.00	0.00	0.00	0.00	0.00	0.00	0.00	0.00	0.00	0.00	0.00
3638	0.00	0.00	0.00	0.00	0.00	0.00	0.00	0.00	0.00	0.00	0.00	0.00	0.00	0.00	0.00	0.00	0.00
3840	0.00	0.00	0.00	0.00	0.00	0.00	0.00	0.00	0.00	0.00	0.00	0.00	0.00	0.00	0.00	0.00	0.00
4042	0.00	0.00	0.00	0.00	0.00	0.00	0.00	0.00	0.00	0.00	0.00	0.00	0.00	0.00	0.00	0.00	0.00

2.10 Appendix C

End Drop Analysis - Computer

The analysis performed by the IBM-PC computer was based on the method of analysis of Section I of the main text. The computer was used as an aid in performing the repetitive calculations required by the analysis method. A decription of the analysis is given below.

The first matrix lists the uncrushed lengths of all listed foam sections. Calculation of these values is performed by using the equations of Section 2.10.6.2.

The first column of the second matrix calculates the average uncrushed length for each section, i.e.,;

$$L_{1516} = (L_{15} + L_{16})/2$$

The second column of the second matrix calculates the cross-sectional area for each section.

The original uncrushed foam volume at each section is calculated in the third column at the second matrix by multiplying the average uncrushed length for each section by its corresponding cross-sectional area.

The fourth column of the second matrix calculates the length of foam crushed for each section using the equations of Section 2.10.6.2.

The fifth column of the second matrix determines the percent crush for each section by dividing the length crushed for each section by the average uncrushed length of the section.

The sixth column of the second matrix contains input data from the derived energy absorption curve. This information can be found in the main text.

The values of the energy absorption/in^3 column of the third matrix are multiplied by the foam volume of each section to find the total absorbed energy per foam section. These values are summed and multiplied by 180 (symmetric contact surfaces) to find the total absorbed energy of the skirts.

In order to find the corresponding inertia load, the stresses corresponding to the % crush of the section were first put into column nine of the second matrix. Next, the matrix values were summed and multiplied by the section area, multiplied by 180 for symmetry and divided by the total package weight.

$$\text{Inertia Load} = \frac{\Sigma\sigma(A)(180)}{wt} = \frac{\Sigma\sigma(A)(180)}{50{,}000 \text{ lbs}}$$

BOTTOM & TOP DROP CASE 1-MAXIMUM DECELERATION
LAST-A-FOAM FR-3718.25

UNCRUSHED LENGTH OF FOAM

X	UNCRUSHED LENGTH
0.0	30.00
1.0	30.80
2.0	31.60
3.0	32.40
4.0	33.20
5.0	34.00
6.0	34.80
7.0	35.60
8.0	36.40
9.0	37.20
10.0	38.00
11.0	38.80
12.0	39.60
13.0	40.40
14.0	41.20
15.0	42.00
15.0	18.00
16.0	18.00
17.0	18.00
18.0	18.00
19.0	18.00
20.0	18.00
21.0	18.00
22.0	18.00
23.0	18.00
24.0	18.00
25.0	18.00
26.0	18.00
27.0	18.00
28.0	17.00
29.0	16.00
30.0	15.00
31.0	14.00
32.0	13.00
33.0	12.00
34.0	11.00
35.0	10.00
36.0	9.00
37.0	8.00
38.0	7.00
39.0	6.00
40.0	5.00
41.0	4.00
42.0	3.00
43.0	2.00
44.0	1.00
45.0	0.00

CRUSHED LENGTH OF FOAM= 3.85

SECTION	AVE. UNCRUSHED LENGTH	SECTION CROSS-SECTIONAL AREA	FOAM VOLUME	CRUSHED LENGTH	PERCENT CRUSH	ENERGY ABSORBED PER IN^3	TOTAL ENERGY ABSORBED PER FOAM SECTION	STRESS (KSI)	STRESS* AREA
01	30.40	1.71	52.00	3.85	13%	0.10	5.20	1.16	1.98
12	31.20	1.68	52.28	3.85	12%	0.09	4.70	1.16	1.94
23	32.00	1.64	52.50	3.85	12%	0.09	4.72	1.16	1.90
34	32.80	1.61	52.67	3.85	12%	0.09	4.74	1.16	1.86
45	33.60	1.57	52.78	3.85	11%	0.08	4.22	1.15	1.81
56	34.40	1.54	52.83	3.85	11%	0.08	4.23	1.15	1.77
67	35.20	1.50	52.83	3.85	11%	0.08	4.23	1.15	1.73
78	36.00	1.47	52.78	3.85	11%	0.08	4.22	1.15	1.69
89	36.80	1.43	52.67	3.85	10%	0.06	3.16	1.11	1.59
910	37.60	1.40	52.50	3.85	10%	0.06	3.15	1.11	1.55
1011	38.40	1.36	52.28	3.85	10%	0.06	3.14	1.11	1.51
1112	39.20	1.33	52.00	3.85	10%	0.06	3.12	1.11	1.47
1213	40.00	1.29	51.66	3.85	10%	0.06	3.10	1.11	1.43
1314	40.80	1.26	51.27	3.85	9%	0.05	2.56	1.02	1.28
1415	41.60	1.22	50.82	3.85	9%	0.05	2.54	1.02	1.25
1516	18.00	1.19	21.36	3.85	21%	0.19	4.06	1.21	1.44
1617	18.00	1.15	20.73	3.85	21%	0.19	3.94	1.21	1.39
1718	18.00	1.12	20.11	3.85	21%	0.19	3.82	1.21	1.35
1819	18.00	1.08	19.48	3.85	21%	0.19	3.70	1.21	1.31
1920	18.00	1.05	18.85	3.85	21%	0.19	3.58	1.21	1.27
2021	18.00	1.01	18.22	3.85	21%	0.19	3.46	1.21	1.22
2122	18.00	0.98	17.59	3.85	21%	0.19	3.34	1.21	1.18
2223	18.00	0.94	16.96	3.85	21%	0.19	3.22	1.21	1.14
2324	18.00	0.91	16.34	3.85	21%	0.19	3.10	1.21	1.10
2425	18.00	0.87	15.71	3.85	21%	0.19	2.98	1.21	1.06
2526	18.00	0.84	15.08	3.85	21%	0.19	2.87	1.21	1.01
2627	18.00	0.80	14.45	3.85	21%	0.19	2.75	1.21	0.97
2728	17.50	0.77	13.44	3.35	19%	0.17	2.28	1.19	0.91
2829	16.50	0.73	12.10	2.35	14%	0.11	1.33	1.17	0.86
2930	15.50	0.70	10.82	1.35	9%	0.05	0.54	1.02	0.71
3031	14.50	0.66	9.62	0.35	2%	0.00	0.00	0.21	0.14
3132	13.50	0.63	8.48	-0.65	-5%	0.00	0.00	0.00	0.00
3233	12.50	0.59	7.42	-1.65	-13%	0.00	0.00	0.00	0.00
3334	11.50	0.56	6.42	-2.65	-23%	0.00	0.00	0.00	0.00
3435	10.50	0.52	5.50	-3.65	-35%	0.00	0.00	0.00	0.00
3536	9.50	0.49	4.64	-4.65	-49%	0.00	0.00	0.00	0.00
3637	8.50	0.45	3.86	-5.65	-66%	0.00	0.00	0.00	0.00
3738	7.50	0.42	3.14	-6.65	-89%	0.00	0.00	0.00	0.00
3839	6.50	0.38	2.50	-7.65	-118%	0.00	0.00	0.00	0.00
3940	5.50	0.35	1.92	-8.65	-157%	0.00	0.00	0.00	0.00
4041	4.50	0.31	1.41	-9.65	-214%	0.00	0.00	0.00	0.00
4142	3.50	0.28	0.98	-10.65	-304%	0.00	0.00	0.00	0.00
4243	2.50	0.24	0.61	-11.65	-466%	0.00	0.00	0.00	0.00
4344	1.50	0.21	0.31	-12.65	-843%	0.00	0.00	0.00	0.00
4445	0.50	0.17	0.09	-13.65	-2730%	0.00	0.00	0.00	0.00

TOTAL ENERGY ABSORBED BY 3.85 IN. DEFLECTION 18364.1 MAXIMUM G-LOAD= 150.6 g

BOTTOM & TOP DROP CASE II-MAXIMUM CRUSH
LAST-A-FOAM FR-3718.25

UNCRUSHED LENGTH OF FOAM

X	UNCRUSHED LENGTH
0.0	
1.0	
2.0	
3.0	
4.0	
5.0	
6.0	
7.0	
8.0	
9.0	
10.0	
11.0	
12.0	
13.0	
14.0	
15.0	
15.0	18.00
16.0	18.00
17.0	18.00
18.0	18.00
19.0	18.00
20.0	18.00
21.0	18.00
22.0	18.00
23.0	18.00
24.0	18.00
25.0	18.00
26.0	18.00
27.0	18.00
28.0	17.00
29.0	16.00
30.0	15.00
31.0	14.00
32.0	13.00
33.0	12.00
34.0	11.00
35.0	10.00
36.0	9.00
37.0	8.00
38.0	7.00
39.0	6.00
40.0	5.00
41.0	4.00
42.0	3.00
43.0	2.00
44.0	1.00
45.0	0.00

CRUSHED LENGTH OF FOAM= 8.10

SECTION	AVE. UNCRUSHED LENGTH	SECTION CROSS-SECTIONAL AREA	FOAM VOLUME	CRUSHED LENGTH	PERCENT CRUSH	ENERGY ABSORBED PER IN^3	TOTAL ENERGY ABSORBED PER FOAM SECTION	STRESS (KSI)	STRESSx AREA
01									
12									
23									
34									
45									
56									
67									
78									
89									
910									
1011									
1112									
1213									
1314									
1415									
1516	18.00	1.19	21.36	8.10	45%	0.39	8.33	1.27	1.51
1617	18.00	1.15	20.73	8.10	45%	0.39	8.09	1.27	1.46
1718	18.00	1.12	20.11	8.10	45%	0.39	7.84	1.27	1.42
1819	18.00	1.08	19.48	8.10	45%	0.39	7.60	1.27	1.37
1920	18.00	1.05	18.85	8.10	45%	0.39	7.35	1.27	1.33
2021	18.00	1.01	18.22	8.10	45%	0.39	7.11	1.27	1.29
2122	18.00	0.98	17.59	8.10	45%	0.39	6.86	1.27	1.24
2223	18.00	0.94	16.96	8.10	45%	0.39	6.62	1.27	1.20
2324	18.00	0.91	16.34	8.10	45%	0.39	6.37	1.27	1.15
2425	18.00	0.87	15.71	8.10	45%	0.39	6.13	1.27	1.11
2526	18.00	0.84	15.08	8.10	45%	0.39	5.88	1.27	1.06
2627	18.00	0.80	14.45	8.10	45%	0.39	5.64	1.27	1.02
2728	17.50	0.77	13.44	7.60	43%	0.37	4.97	1.21	0.93
2829	16.50	0.73	12.10	6.60	40%	0.33	3.99	1.12	0.82
2930	15.50	0.70	10.82	5.60	36%	0.29	3.14	1.05	0.73
3031	14.50	0.66	9.62	4.60	32%	0.25	2.40	0.99	0.66
3132	13.50	0.63	8.48	3.60	27%	0.20	1.70	0.93	0.58
3233	12.50	0.59	7.42	2.60	21%	0.15	1.11	0.87	0.52
3334	11.50	0.56	6.42	1.60	14%	0.08	0.51	0.85	0.47
3435	10.50	0.52	5.50	0.60	6%	0.02	0.11	0.62	0.32
3536	9.50	0.49	4.64	-0.40	-4%	0.00	0.00	0.00	0.00
3637	8.50	0.45	3.86	-1.40	-16%	0.00	0.00	0.00	0.00
3738	7.50	0.42	3.14	-2.40	-32%	0.00	0.00	0.00	0.00
3839	6.50	0.38	2.50	-3.40	-52%	0.00	0.00	0.00	0.00
3940	5.50	0.35	1.92	-4.40	-80%	0.00	0.00	0.00	0.00
4041	4.50	0.31	1.41	-5.40	-120%	0.00	0.00	0.00	0.00
4142	3.50	0.28	0.98	-6.40	-183%	0.00	0.00	0.00	0.00
4243	2.50	0.24	0.61	-7.40	-296%	0.00	0.00	0.00	0.00
4344	1.50	0.21	0.31	-8.40	-560%	0.00	0.00	0.00	0.00
4445	0.50	0.17	0.09	-9.40	-1880%	0.00	0.00	0.00	0.00

TOTAL ENERGY ABSORBED BY 8.10 IN. DEFLECTION 18313.94 MAXIMUM G-LOAD= 72.7 g

2.10 Appendix D

3-82B Shipping Cask

Analysis of Tie Downs

I. Design Criteria

- Tie downs and attachments must be designed for "normal conditions of transport" in accordance with D.O.T. Regulations 49 CFR.
- The horizonal longitudinal load shall be based on braking at 22 feet per second^2 or "0.683 g".
- The horizontal transverse load shall be based on turning on a radius and at a speed where the inner wheels are at the point of leaving the road.
- The maximum vertical load in an upward direction shall be assumed to be equal to the weight of the trailer.
- The vertical load in the downward direction will be 1.5 x the weight of the package plus the reaction loads.
- The major loads from the cask will be transmitted to the trailer at the intersection with the major structural members and these will be the reaction points for the moments resulting from the horizontal and vertical loads.

II. Horizontal, Longitudinal Forces

$0.683\ G = 0.683 \times 50{,}000 = 34{,}150$ lbs

$$\Sigma M_o = -34{,}150\ (55) + 50{,}000\ (19) + F_v\ (19 + 26.3) + F_H\ (62)$$

$$F_v\ (45.3) + F_H\ (62) = 1{,}878{,}250 - 950{,}000 = 928{,}250$$

$$\frac{F_H}{F_v} = \frac{64.0}{62.0} \qquad F_H = 1.03\ F_v$$

$$F_v\ (45.3) + (63.9)\ F_v = 928{,}250$$

$$F_v = \frac{928{,}250}{109.2} = 8500 \text{ lbs}$$

$$F_H = 8{,}755 \text{ lbs}$$

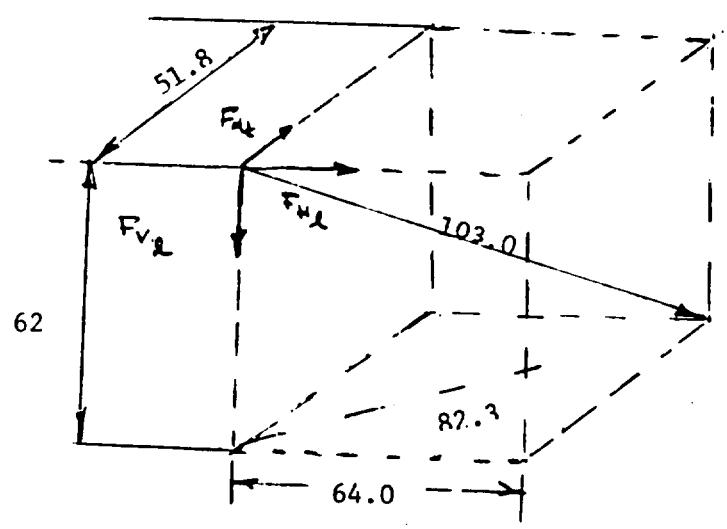

Assume equal load in both tie downs transverse components of load will balance tension due to horizontal longitudinal forces:

$$= \frac{103.0}{64.0} \left(\frac{8955}{2} \right) = 7045 \text{ lbs}$$

III. HORIZONTAL TRANSVERSE FORCE

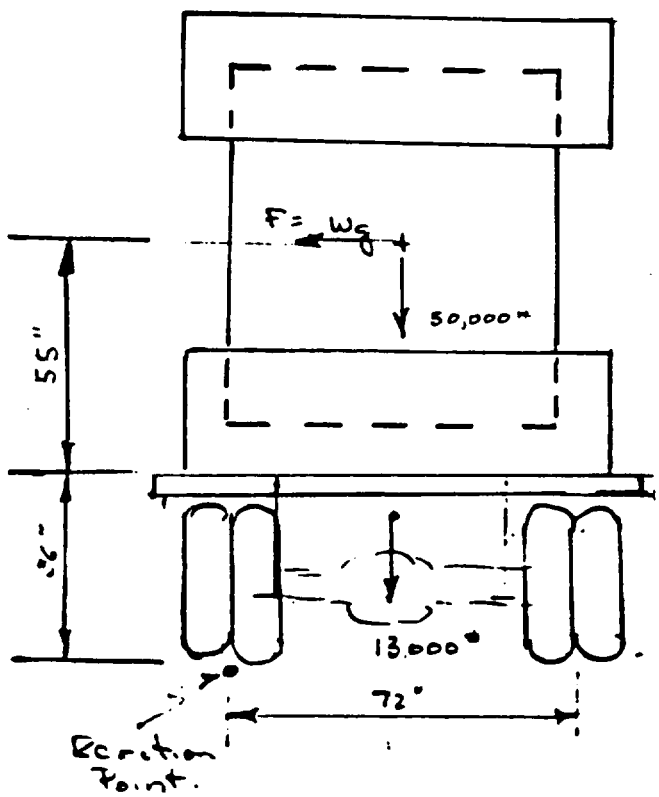

$$F\ (36 + 55) = 36\ (50{,}000 + 13{,}000) = 36W$$

$$g = \frac{F}{W} = \frac{36}{91} = 0.40$$

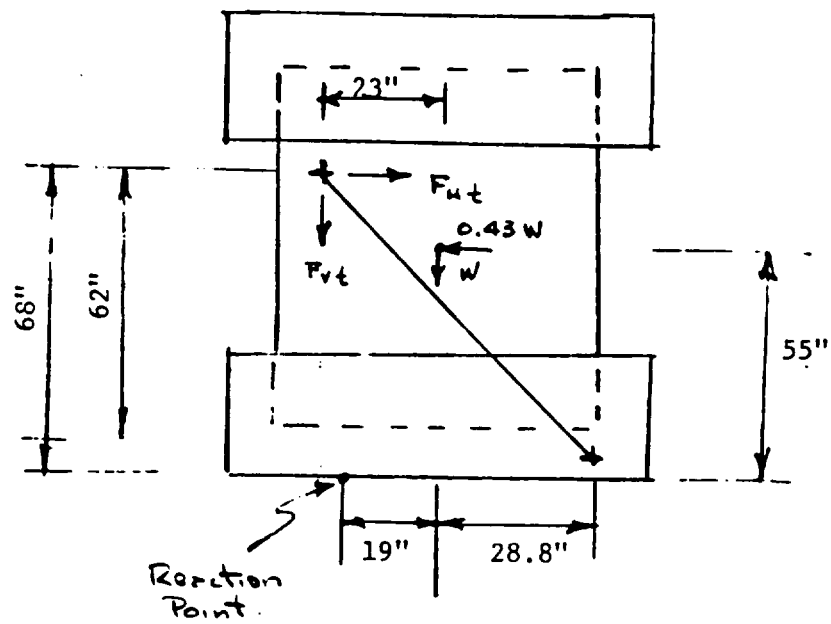

$$\Sigma M_o - F_{vt}\ (23-19) - 0.40\ (W)\ (55) + W(19) + F_{Ht}\ (68) = 0$$

$$F_{Ht}\ (68) - F_{vt}\ (4) = 22.0\ (W) - 19(W)$$

$$\frac{F_{Ht}}{F_{vt}} = \frac{51.8}{62.0} \quad F_{Ht} = 0.835 \times F_{vt}$$

$$56.8\ (F_{vt}) - 4\ (F_{vt}) = 3.0\ W$$

$$F_{vt} = \frac{3.0 \times 50{,}000}{52.8}$$

$$= 2841 \text{ lbs}$$

$$F_{Ht} = 2372 \text{ lbs}$$

Assume two tiedowns carry equal load tension due to lateral transverse load:

$$= \frac{103.0}{62} \times \frac{2841}{2} = 2360 \text{ lbs}$$

IV. <u>VERTICAL UPWARD FORCE</u>

Weight of trailer = 13,000 lbs.

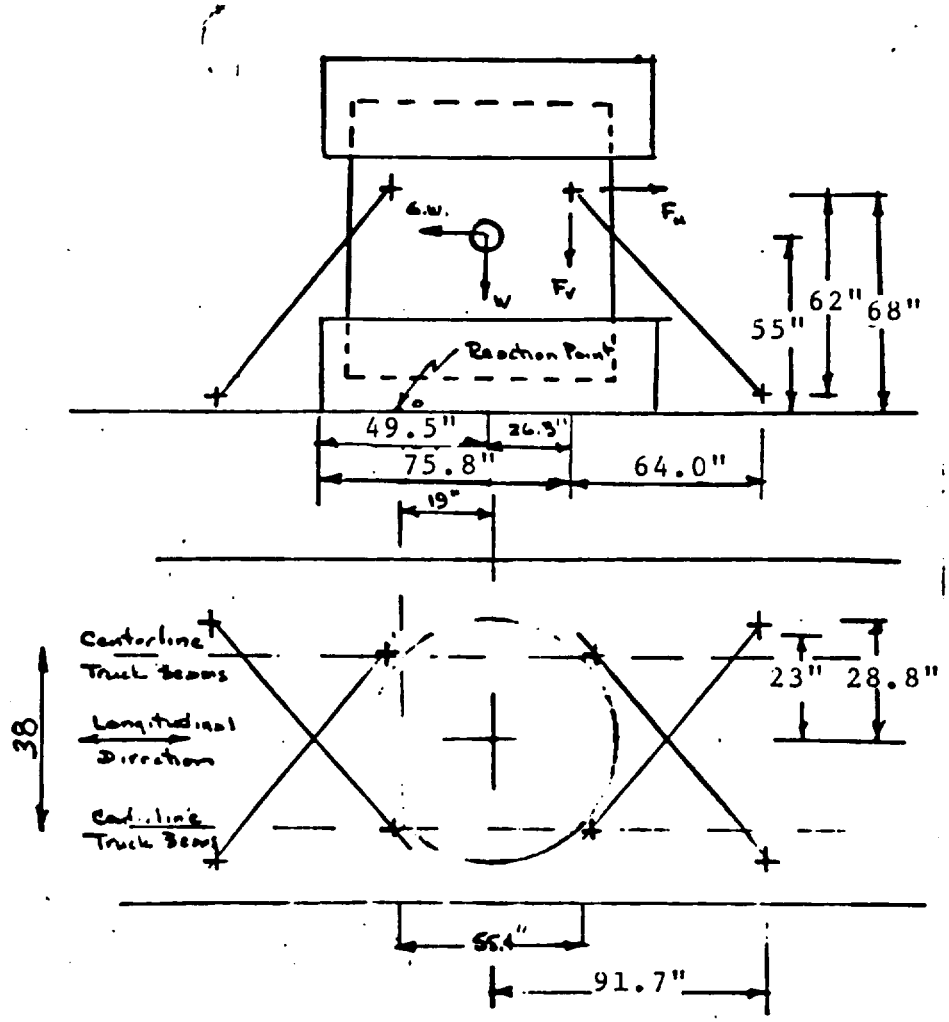

Tie Down Arrangement

Assume equal tension in four tiedowns:

$$F_{vu} = \frac{13,000}{4} = 3250 \text{ lbs.}$$

Tension due to upward forces:

$$= \frac{103.0}{62} \times 3250 = 5399 \text{ lbs}$$

V. MAXIMUM TENSION IN TIE DOWNS

Horizontal, Longitudinal Force	8755 lbs
Horizontal, Lateral Force	2360 lbs
Vertical Upward Force	5399 lbs
Maximum Tension	16,514 lbs

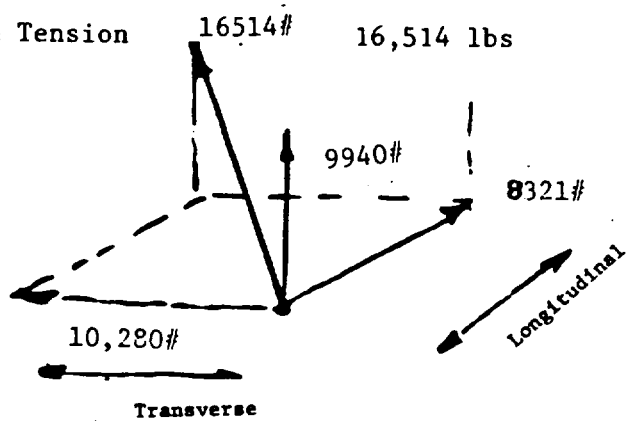

This assumes that the maximum forces in three direction occur concurrently.

VI. ADEQUACY OF CABLE

The type of cable used for the tie down on the 3-82B cask is:

6 x 19 IWRC Aircraft Cord - 3/4 in min. dia.

The breaking strength of this cable is:

49,600 lbs

The factor of safety for this cable is:

$$\frac{49,600}{16,514} = \underline{3.00}$$

VII. TIE DOWNS

The cables are attached to specially fabricated brackets which are welded to the trailer.

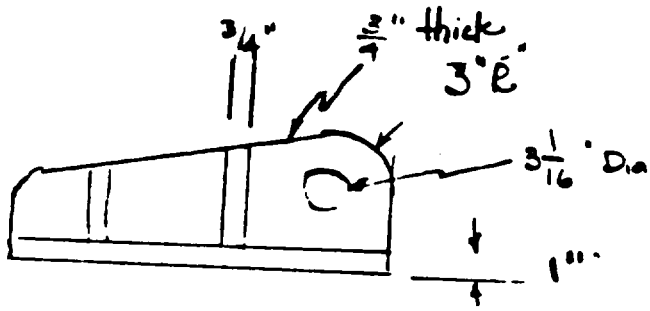

The cables are attached to the brackets using thimbles and clamps with anchor shackles. The minimum size anchor shackle is rated at 4-3/4 ton safe working load or 17,500 lbs. The ultimate strength of the shackles is 6 times the safe working load. Therefore, the factor of safety exceeds that of the cable.

The critical part of the bracket is shear of the material outside of the eye. The area is:

$$2 \times (3 - \frac{3.0625}{2}) \times \frac{3''}{4} = 2.20 \text{ in}^2$$

Based on an allowable stress of 30,000 lbs the bracket will withstand 66,000 lbs or 4.00 times the cable tension.

VIII. ATTACHMENT TO TRAILER

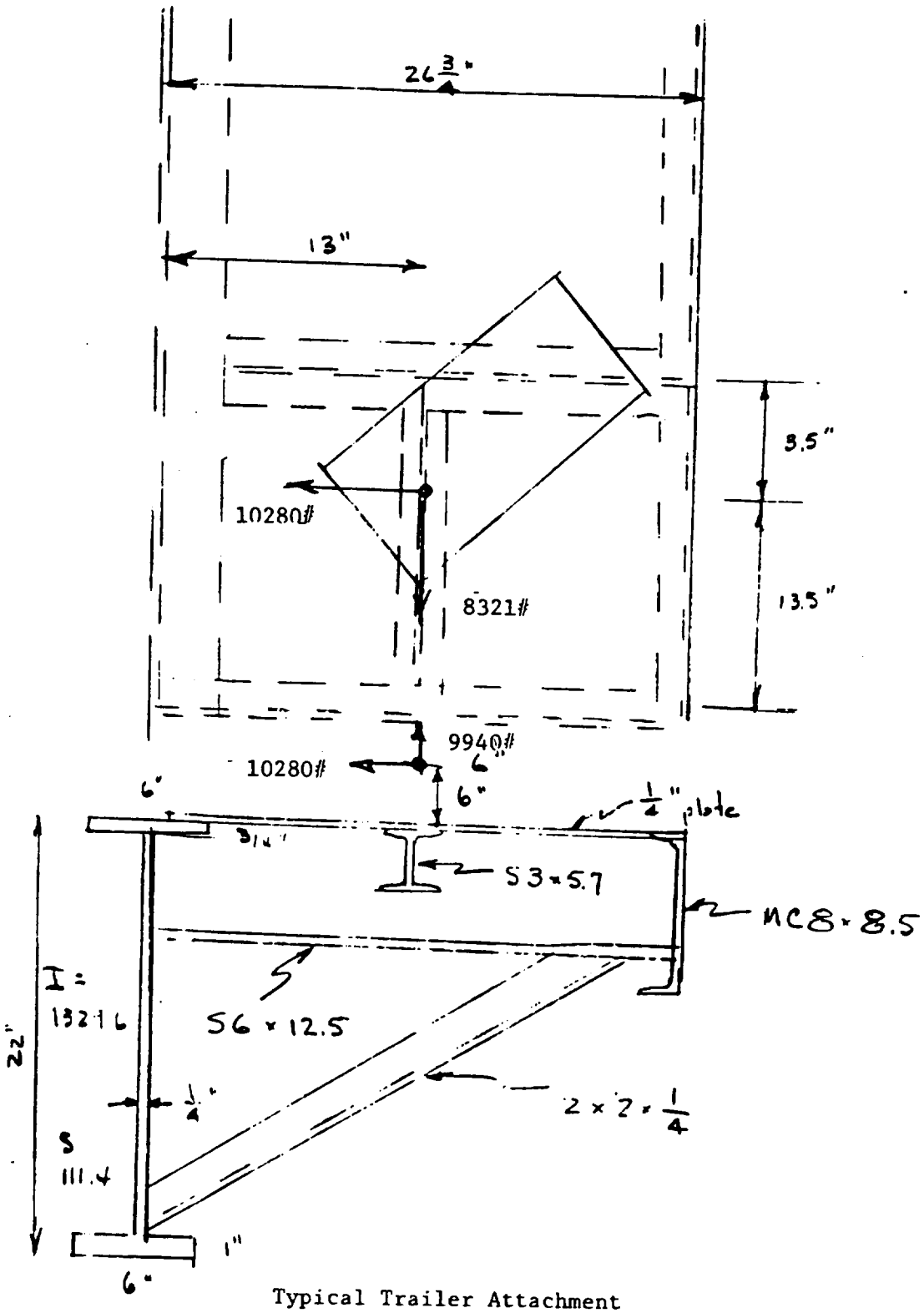

Typical Trailer Attachment

Considering the structure as a pinned frame:

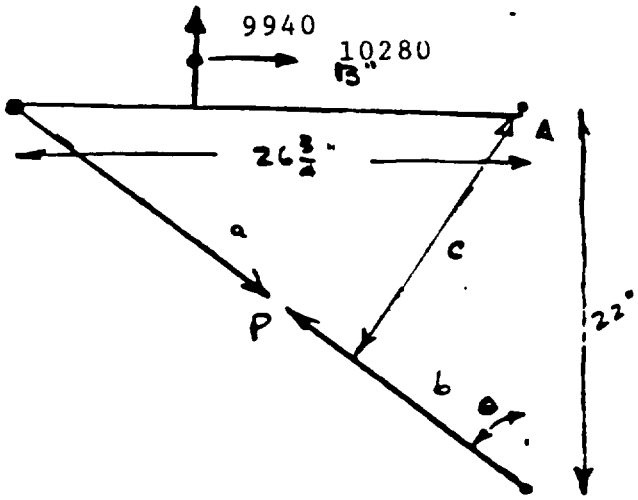

$\tan\theta = \frac{22}{26.34} = 0.835$

$a = 22 \times \sin\theta$

$\theta = 50.2°$

$\sin\theta = 0.765$

$c = 16.83$ inches

$\Sigma M_H = 9940\ (13) + 10{,}280\ (6) - P\ (c) = 0$

$P = \frac{129{,}220 + 61{,}680}{16.83} = 11{,}343$ lb

Area $= 2 \times 1/4 + 1.75 \times 1/4 = 0.9375\ in^2$

Stress $= \frac{11{,}343\ lbs}{0.9375\ in^2} = 12{,}099$ psi

Note: The stress would be lower for the welded structure.

Considerating the cross beam, as a simple beam:

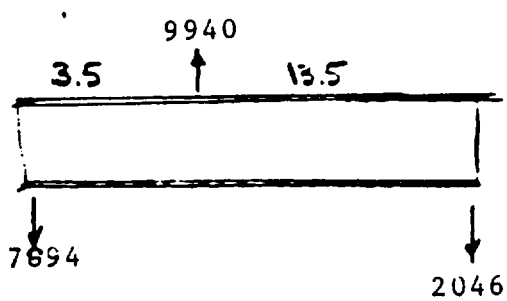

S3 x 5.7 I = 2.52 in^4
S = 1.68 in^3

Stress $= \frac{M}{S} = \frac{27{,}629\ in\text{-}lb}{1.68\ in^3} = 16{,}446$ psi

This does not include the steel plate.

The load on the transverse beam nearest the tie down = 7,894 lbs.

S6 x 12.5 I = 22.1 in^4
S = 7.3 in^3

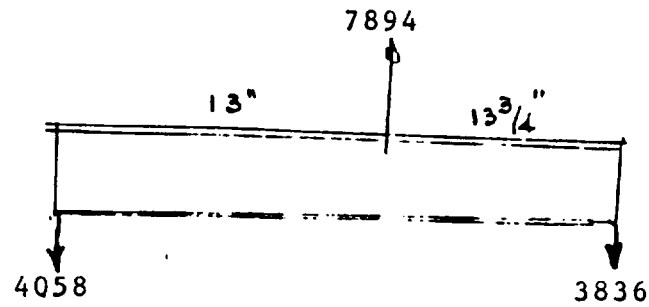

Moment = 40,001 lb in

$$\text{Stress} = \frac{52{,}754 \text{ lb-in}}{7.37 \text{ in}^3} = 7158 \text{ psi}$$

Considering only the deck plate to resist the longitudinal load as a simple cantilever beam

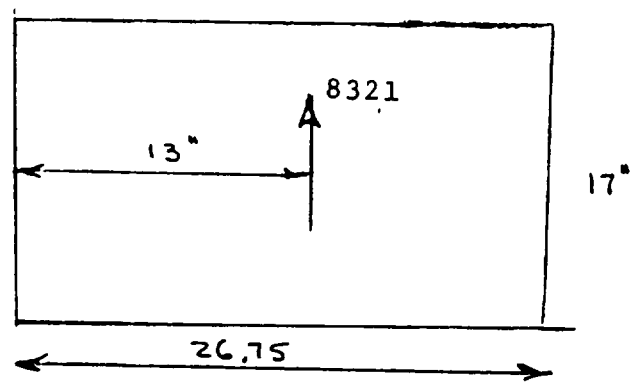

M = 13.75 x 8,321 = 114,414 lb-in

$$I = \frac{1}{12} bh^3 = \frac{1}{12} \times \frac{1}{4} 17^3 = 102.35 \text{ in}^4$$

$$\text{Stress} = M \frac{C}{I} = \frac{114{,}414 \text{ lb-in} \times 17 \text{ in}}{102.35 \text{ in}^4} = 19{,}004 \text{ psi}$$

IX. MAIN TRAILER BEAM

The main beams will be loaded by the weight of the cask at "1.5 W" plus the reaction forces from the tie downs. The maximum loading will occur on the beam resisting the transverse, longitudinal and vertical forces.

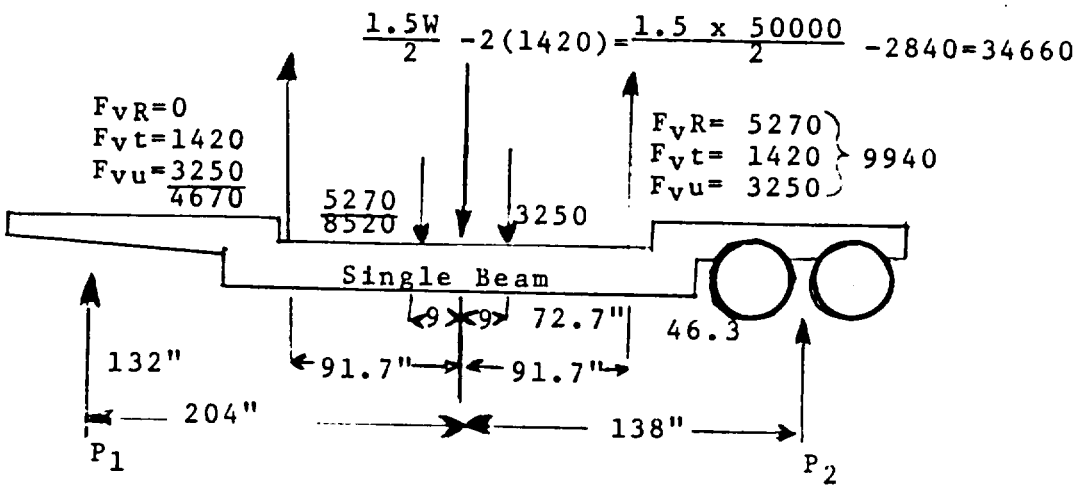

$$\Sigma M_o = -\ 9{,}940(46.3) + 3{,}250(119) + 34{,}660(138) + 8{,}520(157) - 4{,}670(229.7) - P_1(342)$$

$$P_1 = \frac{386{,}750 + 4{,}783{,}080 + 1{,}377{,}640 - 460{,}222 - 1{,}072{,}699}{342}$$

$$P_1 = \frac{4{,}974{,}549}{342} = 14{,}545 \text{ lbs}$$

$$P_2 = 17{,}275 \text{ lbs}$$

$$M_{max} = 3250(19) - 9940(91.7) - 17{,}275(138)$$

$$= +\ 61{,}750 - 911{,}498 - 2{,}383{,}950 = 3{,}233{,}698 \text{ lb-in}$$

$$\text{Stress} = \frac{3{,}233{,}698 \text{ lb-in}}{111.4 \text{ in}^3} = 29{,}028 \text{ psi}$$

$$\text{Factor of Safety} = \frac{58{,}000}{29{,}028} = 1.98$$

2.10 Appendix E

Impact Skirt Analysis for Normal Conditions of Transport

The impact skirts support the cask for normal condition of transport. These support members include a truncated steel cone with a 22.5 inch base radius, and a 4.5 in top radius as well as the impact absorbing foam.

Area of the 12-gauge steel located at R_i, t = .1046"

$A_s = \pi\ (4.5^2 - 4.4^2) = 2.8\ in^2$

Compression Stress on steel = $\frac{50{,}000\ lb}{2.8\ in^2} = 17{,}857\ lb/in^2$

For ASTM A36 yield stress:

Factor of Safety = $\frac{30{,}000\ lb/in^2}{17{,}857\ lb/in^2} = 1.7$

This indicates that the inertia load required to yield the steel would be approximately 1.7 G's. Therefore, the steel plate would support the cask under normal vibration loads. If the steel plate buckled, the foam would support the cask by itself, with little or no foam deformation. Buckling of the steel plate is not anticipated as the dimensions of the steel cylinder are not favorable to column buckling.

Buckling of Truncate Steel Cone

$t = .1047$ in
$R_a = 4.5$ in
$R_b = 22.5$ in
$R_{b/t} > 10$

Therefore, Allowable Buckling Strength, $P' = 0.277\ (2\pi E t^2 \cos^2\alpha)$ (Ref. 2-2 page 557)
$= 0.277\ [2\pi(29 \times 10^6)(.1045)^2(\cos 45°)^2]$
$= 275{,}588$ lbs

Factor of Safety = $\frac{275{,}588\ lbs}{50{,}000\ lbs} = 5.5$

Maximum Foam Stress

Area of supporting foam = π $(33.25^2 - 29.25^2)$

$= 785 \text{ in}^2$

$$\text{Foam Stress} = \frac{50{,}000 \text{ lbs}}{785 \text{ in}^2} = 63.7 \text{ lb/in}^2$$

With 1.5G Load

$$\text{Stress} = (63.7 \text{ lb/in}^2)\ (1.5) = 95.6 \text{ lb/in}^2$$

A stress of this small intensity would cause no permanent deformation.

2.10 APPENDIX F

AS-POURED FOAM STRESS-STRAIN PROPERTIES

The physical properties of the high density polyurethane foam used in the thirty foot drop analysis (Section 2.10.6) are represented by the compressive strength curves provided in Figure 2.10.16 and by the data provided in Table 2.10.1. During the foaming process of the 3-82B Impact Skirts twenty-four foam samples were taken and a compressive strength test of each of the samples was performed per ASTM D-1621. The results of these tests were compared to verify that the foam stress-strain curves are within the maximum and minimum curves provided in Figure 2.10.16. It was found that the actual foam stress valves from 0 to 9% and 76 to 80% strain are higher than the values which were used to analyze the impact skirts.

The physical properties of the foam poured in the impact skirts are represented by the compressive strength curves provided in Figure 2.10.24 and by the data provided in Table 2.10.2. Except as previously noted the upper and lower limit stress strain curves are closer to the median curve of the analyzed foam.

The lower limit stress-strain curve, shown in Figure 2.10.24 which would be used to analyze for maximum foam strain, is higher than the lower limit curve used in the drop analysis of Section 2.10.6. Therefore this curve is bounded by the lower curve used in the analysis and the analysis results are conservative.

The upper bound stress-strain curve is used in the analysis to determine the maximum deceleration (g-forces) applied to the cask during the thirty-foot drop condition. The maximum g-force applied to the cask is directly proportional to the area under the upper limit stress-strain curve. The larger the area under the stress-strain curve the larger the g-force applied to the cask.

The maximum foam strain calculated under the three drop conditions analyzed to determine a maximum deceleration (g-force) is 63%. By comparison of Tables 2.10.1 and 2.10.2 it can be seen that the area under the foam stress-strain curves from 0-63% strain for the analyzed foam and the as-poured foam are approximately equal. The area under the as-poured foam stress-strain curve is slightly smaller than the analyzed foam curve. This indicates that the g-forces calculated using the as-poured foam stress-strain curve would be lower.

Therefore, the upper limit foam stress-strain curve used in the analysis to determine maximum deceleration produces the more conservative results and the analysis of Section 2.10.6 bounds the as-poured foam case.

GENERAL PLASTIC LAST-A-FOAM FR-3718.25

STRESS vs %CRUSH (AS-POURED FOAM 8-86)

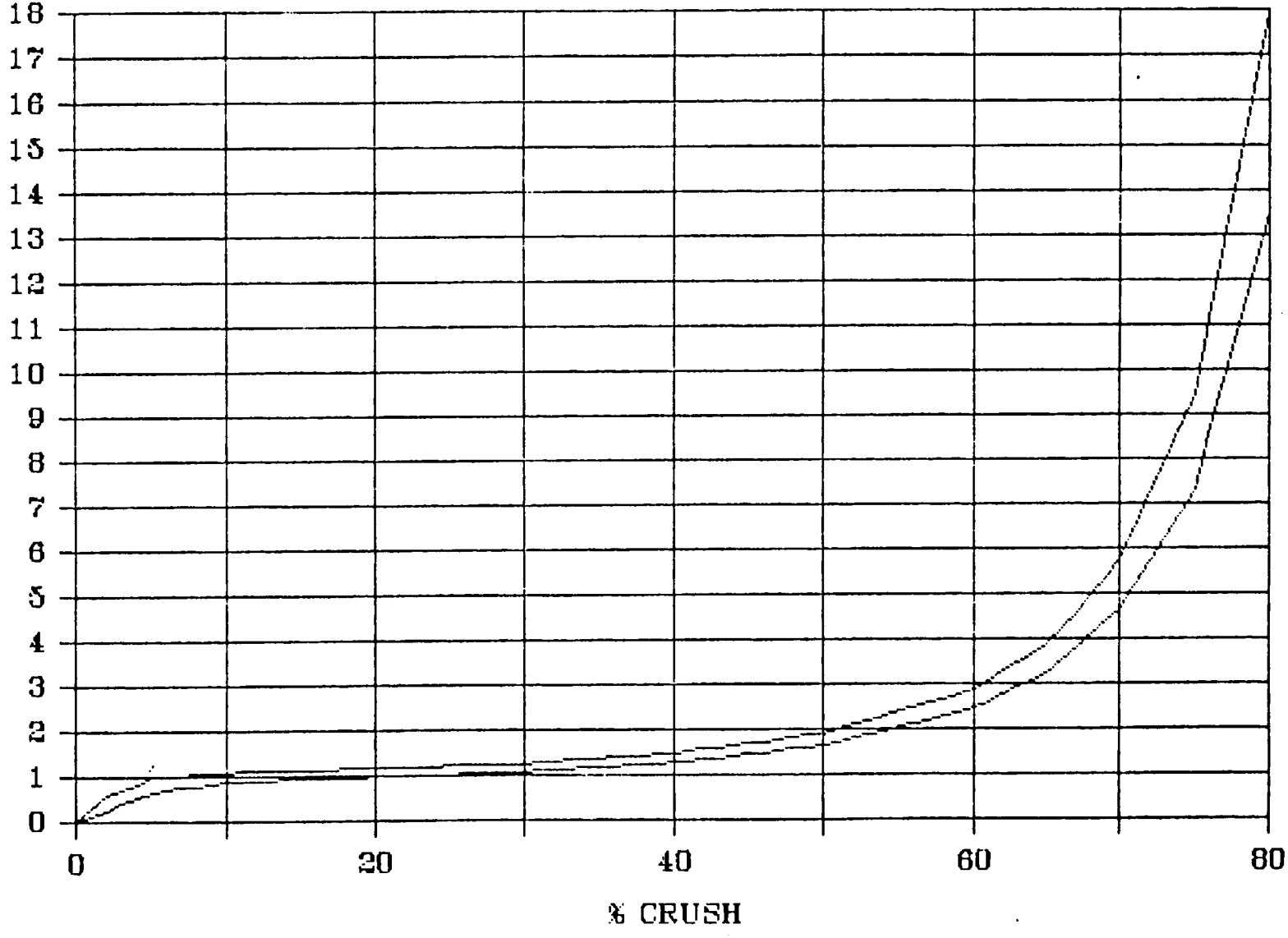

Figure 2.10.24

Table 2.10.2

SUMMARY OF FOAM DATA AS-PROVIDED

FOAM CHARACTERISTICS LAST-A-FOAM FR-3718.25 MEDIAN CURVE (AS-POURED FOAM AUGUST 1986)
INPUT UNCRUSHED LENGTH= 1.0

CRUSH (%)	STRESS (KSI)	AVE. STRESS (KSI)	DEL. CRUSH IN	DEL ENERGY IN-KIPS/IN^2	TOTAL ENERGY IN-KIPS/IN2	AREA IN^2	ENERGY ABSORBED IN-KIPS/IN^2	G-LOADS /IN^2
0	0.000							
1	0.220	0.11	0.01	.00	.00	1.00	.00	0.004
2	0.440	0.33	0.01	.00	.00	1.00	.00	0.009
3	0.577	0.51	0.01	0.01	0.01	1.00	0.01	0.012
4	0.713	0.64	0.01	0.01	0.02	1.00	0.02	0.014
5	0.850	0.78	0.01	0.01	0.02	1.00	0.02	0.017
6	0.880	0.87	0.01	0.01	0.03	1.00	0.03	0.018
7	0.910	0.90	0.01	0.01	0.04	1.00	0.04	0.018
8	0.940	0.93	0.01	0.01	0.05	1.00	0.05	0.019
9	0.970	0.96	0.01	0.01	0.06	1.00	0.06	0.019
10	1.000	0.99	0.01	0.01	0.07	1.00	0.07	0.020
11	1.010	1.00	0.01	0.01	0.08	1.00	0.08	0.020
12	1.019	1.01	0.01	0.01	0.09	1.00	0.09	0.020
13	1.029	1.02	0.01	0.01	0.10	1.00	0.10	0.021
14	1.038	1.03	0.01	0.01	0.11	1.00	0.11	0.021
15	1.048	1.04	0.01	0.01	0.12	1.00	0.12	0.021
16	1.057	1.05	0.01	0.01	0.13	1.00	0.13	0.021
17	1.067	1.06	0.01	0.01	0.14	1.00	0.14	0.021
18	1.076	1.07	0.01	0.01	0.15	1.00	0.15	0.022
19	1.086	1.08	0.01	0.01	0.16	1.00	0.16	0.022
20	1.095	1.09	0.01	0.01	0.17	1.00	0.17	0.022
21	1.105	1.10	0.01	0.01	0.19	1.00	0.19	0.022
22	1.115	1.11	0.01	0.01	0.20	1.00	0.20	0.022
23	1.125	1.12	0.01	0.01	0.21	1.00	0.21	0.023
24	1.135	1.13	0.01	0.01	0.22	1.00	0.22	0.023
25	1.145	1.14	0.01	0.01	0.23	1.00	0.23	0.023
26	1.155	1.15	0.01	0.01	0.24	1.00	0.24	0.023
27	1.165	1.16	0.01	0.01	0.25	1.00	0.25	0.023
28	1.175	1.17	0.01	0.01	0.27	1.00	0.27	0.024
29	1.185	1.18	0.01	0.01	0.28	1.00	0.28	0.024
30	1.195	1.19	0.01	0.01	0.29	1.00	0.29	0.024
31	1.215	1.21	0.01	0.01	0.30	1.00	0.30	0.024
32	1.236	1.23	0.01	0.01	0.31	1.00	0.31	0.025
33	1.256	1.25	0.01	0.01	0.33	1.00	0.33	0.025
34	1.276	1.27	0.01	0.01	0.34	1.00	0.34	0.026
35	1.296	1.29	0.01	0.01	0.35	1.00	0.35	0.026
36	1.317	1.31	0.01	0.01	0.36	1.00	0.36	0.026
37	1.337	1.33	0.01	0.01	0.38	1.00	0.38	0.027
38	1.357	1.35	0.01	0.01	0.39	1.00	0.39	0.027
39	1.377	1.37	0.01	0.01	0.40	1.00	0.40	0.028
40	1.398	1.39	0.01	0.01	0.42	1.00	0.42	0.028
41	1.438	1.42	0.01	0.01	0.43	1.00	0.43	0.029
42	1.478	1.46	0.01	0.01	0.45	1.00	0.45	0.030
43	1.518	1.50	0.01	0.01	0.46	1.00	0.46	0.030
44	1.557	1.54	0.01	0.02	0.48	1.00	0.48	0.031
45	1.597	1.58	0.01	0.02	0.49	1.00	0.49	0.032
46	1.637	1.62	0.01	0.02	0.51	1.00	0.51	0.033
47	1.677	1.66	0.01	0.02	0.53	1.00	0.53	0.034
48	1.717	1.70	0.01	0.02	0.54	1.00	0.54	0.034
49	1.757	1.74	0.01	0.02	0.56	1.00	0.56	0.035
50	1.798	1.78	0.01	0.02	0.58	1.00	0.58	0.036
51	1.886	1.84	0.01	0.02	0.60	1.00	0.60	0.038
52	1.974	1.93	0.01	0.02	0.62	1.00	0.62	0.039

FOAM CHARACTERISTICS LAST-A-FOAM FR-3718.25 MEDIAN CURVE (AS-POURED FOAM AUGUST 1986)
INPUT UNCRUSHED LENGTH= 1.0

CRUSH (%)	STRESS (KSI)	AVE. STRESS (KSI)	DEL. CRUSH IN	DEL ENERGY IN-KIPS/IN^2	TOTAL ENERGY IN-KIPS/IN2	AREA IN^2	ENERGY ABSORBED IN-KIPS/IN^2	G-LOADS /IN^2
53	2.062	2.02	0.01	0.02	0.64	1.00	0.64	0.041
54	2.150	2.11	0.01	0.02	0.66	1.00	0.66	0.043
55	2.238	2.19	0.01	0.02	0.68	1.00	0.68	0.045
56	2.326	2.28	0.01	0.02	0.70	1.00	0.70	0.047
57	2.413	2.37	0.01	0.02	0.73	1.00	0.73	0.048
58	2.502	2.46	0.01	0.02	0.75	1.00	0.75	0.050
59	2.589	2.55	0.01	0.03	0.78	1.00	0.78	0.052
60	2.678	2.63	0.01	0.03	0.80	1.00	0.80	0.054
61	2.859	2.77	0.01	0.03	0.83	1.00	0.83	0.057
62	3.041	2.95	0.01	0.03	0.86	1.00	0.86	0.061
63	3.222	3.13	0.01	0.03	0.89	1.00	0.89	0.064
64	3.404	3.31	0.01	0.03	0.92	1.00	0.92	0.068
65	3.585	3.49	0.01	0.03	0.96	1.00	0.96	0.072
66	3.913	3.75	0.01	0.04	1.00	1.00	1.00	0.078
67	4.241	4.08	0.01	0.04	1.04	1.00	1.04	0.085
68	4.569	4.41	0.01	0.04	1.08	1.00	1.08	0.091
69	4.897	4.73	0.01	0.05	1.13	1.00	1.13	0.098
70	5.225	5.06	0.01	0.05	1.18	1.00	1.18	0.105
71	5.856	5.54	0.01	0.06	1.23	1.00	1.23	0.117
72	6.487	6.17	0.01	0.06	1.30	1.00	1.30	0.130
73	7.118	6.80	0.01	0.07	1.36	1.00	1.36	0.142
74	7.749	7.43	0.01	0.07	1.44	1.00	1.44	0.155
75	8.380	8.06	0.01	0.08	1.52	1.00	1.52	0.168
76	9.847	9.11	0.01	0.09	1.61	1.00	1.61	0.197
77	11.314	10.58	0.01	0.11	1.72	1.00	1.72	0.226
78	12.781	12.05	0.01	0.12	1.84	1.00	1.84	0.256
79	14.248	13.51	0.01	0.14	1.97	1.00	1.97	0.285
80	15.715	14.98	0.01	0.15	2.12	1.00	2.12	0.314

FOAM CHARACTERISTICS LAST-A-FOAM FR-3718.25 UPPER LIMIT (AS-POURED FOAM AUGUST 1986)
INPUT UNCRUSHED LENGTH= 1.0

CRUSH (%)	STRESS (KSI)	AVE. STRESS (KSI)	DEL. CRUSH IN	DEL ENERGY IN-KIPS/IN^2	TOTAL ENERGY IN-KIPS/IN2	AREA IN^2	ENERGY ABSORBED IN-KIPS/IN^2	G-LOADS /IN^2
0	0.000							
1	0.300	0.15	0.01	.00	.00	1.00	.00	0.006
2	0.600	0.45	0.01	.00	0.01	1.00	0.01	0.012
3	0.733	0.67	0.01	0.01	0.01	1.00	0.01	0.015
4	0.866	0.80	0.01	0.01	0.02	1.00	0.02	0.017
5	1.000	0.93	0.01	0.01	0.03	1.00	0.03	0.020
6	1.022	1.01	0.01	0.01	0.04	1.00	0.04	0.020
7	1.044	1.03	0.01	0.01	0.05	1.00	0.05	0.021
8	1.066	1.06	0.01	0.01	0.06	1.00	0.06	0.021
9	1.088	1.08	0.01	0.01	0.07	1.00	0.07	0.022
10	1.110	1.10	0.01	0.01	0.08	1.00	0.08	0.022
11	1.118	1.11	0.01	0.01	0.09	1.00	0.09	0.022
12	1.125	1.12	0.01	0.01	0.11	1.00	0.11	0.023
13	1.133	1.13	0.01	0.01	0.12	1.00	0.12	0.023
14	1.140	1.14	0.01	0.01	0.13	1.00	0.13	0.023
15	1.148	1.14	0.01	0.01	0.14	1.00	0.14	0.023
16	1.155	1.15	0.01	0.01	0.15	1.00	0.15	0.023
17	1.163	1.16	0.01	0.01	0.16	1.00	0.16	0.023
18	1.170	1.17	0.01	0.01	0.17	1.00	0.17	0.023
19	1.178	1.17	0.01	0.01	0.19	1.00	0.19	0.024
20	1.185	1.18	0.01	0.01	0.20	1.00	0.20	0.024
21	1.195	1.19	0.01	0.01	0.21	1.00	0.21	0.024
22	1.205	1.20	0.01	0.01	0.22	1.00	0.22	0.024
23	1.215	1.21	0.01	0.01	0.23	1.00	0.23	0.024
24	1.225	1.22	0.01	0.01	0.25	1.00	0.25	0.025
25	1.235	1.23	0.01	0.01	0.26	1.00	0.26	0.025
26	1.245	1.24	0.01	0.01	0.27	1.00	0.27	0.025
27	1.255	1.25	0.01	0.01	0.28	1.00	0.28	0.025
28	1.265	1.26	0.01	0.01	0.30	1.00	0.30	0.025
29	1.275	1.27	0.01	0.01	0.31	1.00	0.31	0.026
30	1.285	1.28	0.01	0.01	0.32	1.00	0.32	0.026
31	1.307	1.30	0.01	0.01	0.33	1.00	0.33	0.026
32	1.329	1.32	0.01	0.01	0.35	1.00	0.35	0.027
33	1.351	1.34	0.01	0.01	0.36	1.00	0.36	0.027
34	1.373	1.36	0.01	0.01	0.37	1.00	0.37	0.027
35	1.395	1.38	0.01	0.01	0.39	1.00	0.39	0.028

FOAM CHARACTERISTICS LAST-A-FOAM FR-3718.25 UPPER LIMIT (AS-POURED FOAM AUGUST 1986)
INPUT UNCRUSHED LENGTH= 1.0

CRUSH (%)	STRESS (KSI)	AVE. STRESS (KSI)	DEL. CRUSH IN	DEL ENERGY IN-KIPS/IN^2	TOTAL ENERGY IN-KIPS/IN2	AREA IN^2	ENERGY ABSORBED IN-KIPS/IN^2	G-LOADS /IN^2
36	1.417	1.41	0.01	0.01	0.40	1.00	0.40	0.028
37	1.439	1.43	0.01	0.01	0.42	1.00	0.42	0.029
38	1.461	1.45	0.01	0.01	0.43	1.00	0.43	0.029
39	1.483	1.47	0.01	0.01	0.45	1.00	0.45	0.030
40	1.505	1.49	0.01	0.01	0.46	1.00	0.46	0.030
41	1.548	1.53	0.01	0.02	0.48	1.00	0.48	0.031
42	1.591	1.57	0.01	0.02	0.49	1.00	0.49	0.032
43	1.634	1.61	0.01	0.02	0.51	1.00	0.51	0.033
44	1.677	1.66	0.01	0.02	0.52	1.00	0.52	0.034
45	1.720	1.70	0.01	0.02	0.54	1.00	0.54	0.034
46	1.763	1.74	0.01	0.02	0.56	1.00	0.56	0.035
47	1.806	1.78	0.01	0.02	0.58	1.00	0.58	0.036
48	1.849	1.83	0.01	0.02	0.59	1.00	0.59	0.037
49	1.892	1.87	0.01	0.02	0.61	1.00	0.61	0.038
50	1.935	1.91	0.01	0.02	0.63	1.00	0.63	0.039
51	2.031	1.98	0.01	0.02	0.65	1.00	0.65	0.041
52	2.126	2.08	0.01	0.02	0.67	1.00	0.67	0.043
53	2.222	2.17	0.01	0.02	0.69	1.00	0.69	0.044
54	2.317	2.27	0.01	0.02	0.72	1.00	0.72	0.046
55	2.413	2.36	0.01	0.02	0.74	1.00	0.74	0.048
56	2.508	2.46	0.01	0.02	0.77	1.00	0.77	0.050
57	2.603	2.56	0.01	0.03	0.79	1.00	0.79	0.052
58	2.699	2.65	0.01	0.03	0.82	1.00	0.82	0.054
59	2.794	2.75	0.01	0.03	0.85	1.00	0.85	0.056
60	2.890	2.84	0.01	0.03	0.87	1.00	0.87	0.058
61	3.092	2.99	0.01	0.03	0.90	1.00	0.90	0.062
62	3.294	3.19	0.01	0.03	0.94	1.00	0.94	0.066
63	3.496	3.40	0.01	0.03	0.97	1.00	0.97	0.070
64	3.698	3.60	0.01	0.04	1.01	1.00	1.01	0.074
65	3.900	3.80	0.01	0.04	1.04	1.00	1.04	0.078
66	4.272	4.09	0.01	0.04	1.08	1.00	1.08	0.085
67	4.644	4.46	0.01	0.04	1.13	1.00	1.13	0.093
68	5.016	4.83	0.01	0.05	1.18	1.00	1.18	0.100
69	5.388	5.20	0.01	0.05	1.23	1.00	1.23	0.108
70	5.760	5.57	0.01	0.06	1.28	1.00	1.28	0.115
71	6.498	6.13	0.01	0.06	1.35	1.00	1.35	0.130
72	7.236	6.87	0.01	0.07	1.41	1.00	1.41	0.145
73	7.974	7.61	0.01	0.08	1.49	1.00	1.49	0.159
74	8.712	8.34	0.01	0.09	1.57	1.00	1.57	0.174
75	9.450	9.08	0.01	0.09	1.67	1.00	1.67	0.189
76	11.150	10.30	0.01	0.10	1.77	1.00	1.77	0.223
77	12.850	12.00	0.01	0.12	1.89	1.00	1.89	0.257
78	14.550	13.70	0.01	0.14	2.03	1.00	2.03	0.291
79	16.250	15.40	0.01	0.15	2.18	1.00	2.18	0.325
80	17.950	17.10	0.01	0.17	2.35	1.00	2.35	0.359

FOAM CHARACTERISTICS LAST-A-FOAM FR-3718.25 LOWER LIMIT (AS-POURED FOAM AUGUST 1986)
INPUT UNCRUSHED LENGTH= 1.0

CRUSH (%)	STRESS (KSI)	AVE. STRESS (KSI)	DEL. CRUSH IN	DEL ENERGY IN-KIPS/IN^2	TOTAL ENERGY IN-KIPS/IN2	AREA IN^2	ENERGY ABSORBED IN-KIPS/IN^2	G-LOADS /IN^2
0	0.000							
1	0.140	0.07	0.01	.00	.00	1.00	.00	0.003
2	0.280	0.21	0.01	.00	.00	1.00	.00	0.006
3	0.420	0.35	0.01	.00	0.01	1.00	0.01	0.008
4	0.560	0.49	0.01	.00	0.01	1.00	0.01	0.011
5	0.700	0.63	0.01	0.01	0.02	1.00	0.02	0.014
6	0.738	0.72	0.01	0.01	0.02	1.00	0.02	0.015
7	0.776	0.76	0.01	0.01	0.03	1.00	0.03	0.016
8	0.814	0.80	0.01	0.01	0.04	1.00	0.04	0.016
9	0.852	0.83	0.01	0.01	0.05	1.00	0.05	0.017
10	0.890	0.87	0.01	0.01	0.06	1.00	0.06	0.018
11	0.902	0.90	0.01	0.01	0.07	1.00	0.07	0.018
12	0.913	0.91	0.01	0.01	0.08	1.00	0.08	0.018
13	0.924	0.92	0.01	0.01	0.08	1.00	0.08	0.018
14	0.936	0.93	0.01	0.01	0.09	1.00	0.09	0.019
15	0.947	0.94	0.01	0.01	0.10	1.00	0.10	0.019
16	0.959	0.95	0.01	0.01	0.11	1.00	0.11	0.019
17	0.970	0.96	0.01	0.01	0.12	1.00	0.12	0.019
18	0.982	0.98	0.01	0.01	0.13	1.00	0.13	0.020
19	0.993	0.99	0.01	0.01	0.14	1.00	0.14	0.020
20	1.005	1.00	0.01	0.01	0.15	1.00	0.15	0.020

FOAM CHARACTERISTICS LAST-A-FOAM FR-3718.25 LOWER LIMIT (AS-POURED FOAM AUGUST 1986)
INPUT UNCRUSHED LENGTH= 1.0

CRUSH (%)	STRESS (KSI)	AVE. STRESS (KSI)	DEL. CRUSH IN	DEL ENERGY IN-KIPS/IN^2	TOTAL ENERGY IN-KIPS/IN2	AREA IN^2	ENERGY ABSORBED IN-KIPS/IN^2	G-LOADS /IN^2
21	1.015	1.01	0.01	0.01	0.16	1.00	0.16	0.020
22	1.025	1.02	0.01	0.01	0.17	1.00	0.17	0.021
23	1.035	1.03	0.01	0.01	0.18	1.00	0.18	0.021
24	1.045	1.04	0.01	0.01	0.19	1.00	0.19	0.021
25	1.055	1.05	0.01	0.01	0.20	1.00	0.20	0.021
26	1.065	1.06	0.01	0.01	0.21	1.00	0.21	0.021
27	1.075	1.07	0.01	0.01	0.22	1.00	0.22	0.022
28	1.085	1.08	0.01	0.01	0.24	1.00	0.24	0.022
29	1.095	1.09	0.01	0.01	0.25	1.00	0.25	0.022
30	1.105	1.10	0.01	0.01	0.26	1.00	0.26	0.022
31	1.124	1.11	0.01	0.01	0.27	1.00	0.27	0.022
32	1.142	1.13	0.01	0.01	0.28	1.00	0.28	0.023
33	1.161	1.15	0.01	0.01	0.29	1.00	0.29	0.023
34	1.179	1.17	0.01	0.01	0.30	1.00	0.30	0.024
35	1.198	1.19	0.01	0.01	0.32	1.00	0.32	0.024
36	1.216	1.21	0.01	0.01	0.33	1.00	0.33	0.024
37	1.234	1.23	0.01	0.01	0.34	1.00	0.34	0.025
38	1.253	1.24	0.01	0.01	0.35	1.00	0.35	0.025
39	1.271	1.26	0.01	0.01	0.36	1.00	0.36	0.025
40	1.290	1.28	0.01	0.01	0.38	1.00	0.38	0.026
41	1.327	1.31	0.01	0.01	0.39	1.00	0.39	0.027
42	1.364	1.35	0.01	0.01	0.40	1.00	0.40	0.027
43	1.401	1.38	0.01	0.01	0.42	1.00	0.42	0.028
44	1.438	1.42	0.01	0.01	0.43	1.00	0.43	0.029
45	1.475	1.46	0.01	0.01	0.45	1.00	0.45	0.029
46	1.512	1.49	0.01	0.01	0.46	1.00	0.46	0.030
47	1.549	1.53	0.01	0.02	0.48	1.00	0.48	0.031
48	1.586	1.57	0.01	0.02	0.49	1.00	0.49	0.032
49	1.623	1.60	0.01	0.02	0.51	1.00	0.51	0.032
50	1.660	1.64	0.01	0.02	0.52	1.00	0.52	0.033
51	1.741	1.70	0.01	0.02	0.54	1.00	0.54	0.035
52	1.821	1.78	0.01	0.02	0.56	1.00	0.56	0.036
53	1.902	1.86	0.01	0.02	0.58	1.00	0.58	0.038
54	1.982	1.94	0.01	0.02	0.60	1.00	0.60	0.040
55	2.063	2.02	0.01	0.02	0.62	1.00	0.62	0.041
56	2.143	2.10	0.01	0.02	0.64	1.00	0.64	0.043
57	2.224	2.18	0.01	0.02	0.66	1.00	0.66	0.044
58	2.304	2.26	0.01	0.02	0.68	1.00	0.68	0.046
59	2.384	2.34	0.01	0.02	0.71	1.00	0.71	0.048
60	2.465	2.42	0.01	0.02	0.73	1.00	0.73	0.049
61	2.626	2.55	0.01	0.03	0.76	1.00	0.76	0.053
62	2.787	2.71	0.01	0.03	0.78	1.00	0.78	0.056
63	2.948	2.87	0.01	0.03	0.81	1.00	0.81	0.059
64	3.109	3.03	0.01	0.03	0.84	1.00	0.84	0.062
65	3.270	3.19	0.01	0.03	0.87	1.00	0.87	0.065
66	3.554	3.41	0.01	0.03	0.91	1.00	0.91	0.071
67	3.838	3.70	0.01	0.04	0.95	1.00	0.95	0.077
68	4.122	3.98	0.01	0.04	0.99	1.00	0.99	0.082
69	4.406	4.26	0.01	0.04	1.03	1.00	1.03	0.088
70	4.690	4.55	0.01	0.05	1.07	1.00	1.07	0.094
71	5.214	4.95	0.01	0.05	1.12	1.00	1.12	0.104
72	5.738	5.48	0.01	0.05	1.18	1.00	1.18	0.115
73	6.262	6.00	0.01	0.06	1.24	1.00	1.24	0.125
74	6.786	6.52	0.01	0.07	1.30	1.00	1.30	0.136
75	7.310	7.05	0.01	0.07	1.37	1.00	1.37	0.146
76	8.544	7.93	0.01	0.08	1.45	1.00	1.45	0.171
77	9.778	9.16	0.01	0.09	1.54	1.00	1.54	0.196
78	11.012	10.40	0.01	0.10	1.65	1.00	1.65	0.220
79	12.246	11.63	0.01	0.12	1.76	1.00	1.76	0.245
80	13.480	12.86	0.01	0.13	1.89	1.00	1.89	0.270

3.0 THERMAL EVALUATION

3.1 Discussion

This chapter presents the analyses made in the process of determining the adequacy of the 3-82B cask design with respect to thermal performance. The results of the thermal analyses indicate the steady heat load and the transient fire environments can be endured without incurring unacceptable temperatures or materials degradation. The cold condition was also found to be endurable without adverse effects or impaired performance. The design elements of the 3-82B package that affect the thermal properties of the package can be found in Figure 3-1.

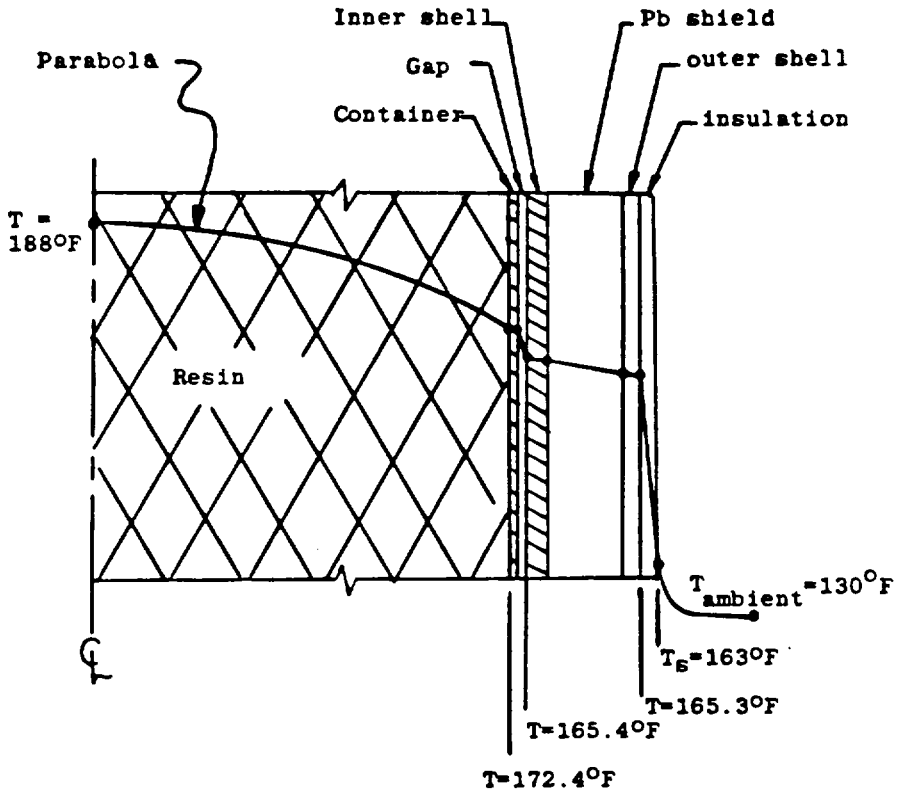

Figure 3-1 Thermal Profile Through Single Container Process Waste Contents Configuration

3.2 Summary of Thermal Properties of Material

The material constants are as follows:

Component	k(Btu/hr-ft-°F)
Insulation	0.083
Outer steel shell	25
Lead	18.6
Inner steel shell	25
Gap	0.018
Container wall	25
Resins	0.2

3.3 Technical Specifications of Components

The 3-82B transport cask contains no active components such as valves, etc. Therefore, this section is not applicable.

3.4 Thermal Evaluation for Normal Conditions of Transport

3.4.1 Thermal Model

Figure 3-1 represents the thermal profile generated as part of the steady state heat analysis. This also illustrates the materials used in construction.

3.4.2 Maximum Temperatures

This analysis is needed to determine the cask outer surface temperature so it can be compared to the 180°F limit. The following phenomena are considered:

(a) Decay heat load of the radioactive waste must be rejected at the cask external surface.

(b) Solar heat load which must be rejected at the cask external surface.

(c) Heat rejection by convection at the cask external surfaces.

(d) Heat exchange by radiation between the cask external surfaces and the surroundings.

(e) Cask materials thermal properties such as conductivity and emissivity.

The following assumptions have been made:

(a)	Ambient temperature	130°F
(b)	Solar heat flux (load)	144 Btu/hr-ft^2
(c)	Cask surface emissivity for radiation to normal surroundings:	0.95
(d)	Cask surface absorptivity for radiation under normal steady conditions:	0.95

The internally generated heat from the decay of waste materials is calculated as follows:

$$q_{\text{decay heat}} = \frac{(V)(A')}{65 \frac{ci}{watt}} \times 3.414 \text{ Btu/watt-hr}$$

Where:

$q_{\text{decay heat}}$ = heat generation from decay of wastes, Btu/hr

V = waste volume, ft^3

A' = maximum waste specific activity, ci/ft^3

TABLE 3-1. EXAMPLE DECAY HEAT LOADS

Cask Contents	V	A'	[a]decay heat (Btu/hr)
Single Container	65	60	205
30 Gallon Drums	32	50	84
55 Gallon Drums	22	100	116

The limiting case is for the single process waste container configuration which has the highest heat load, given in the first line of Table 3-1.

The solar heat load was evaluated based on the analyses presented in Reference 3-1. The earth's atmosphere intercepts solar energy at the rate of 442 Btu/hr-ft^2 based on an interception area normal to the sun's rays. The amount of that energy reaching the earth's surface is generally considered to be 70 percent of the above, or 309 Btu/hr-ft^2. An integrated average of Figure 5.3 of Reference 3-1 for the sun rays being transmitted normal to the earth's surface over

the longest day of the year (June 21 at latitude 42°N) yields an average hourly flux of 144 Btu/hr per square foot of projected surface. This value of heat flux is believed to be most representative of conditions within the 48 contiguous States in the U.S.

The value for the cask surface emissivity was obtained from Reference 3-1, page 133 for the painted surfaces.

The cask geometry was assumed to be a cylinder with the following dimensions:

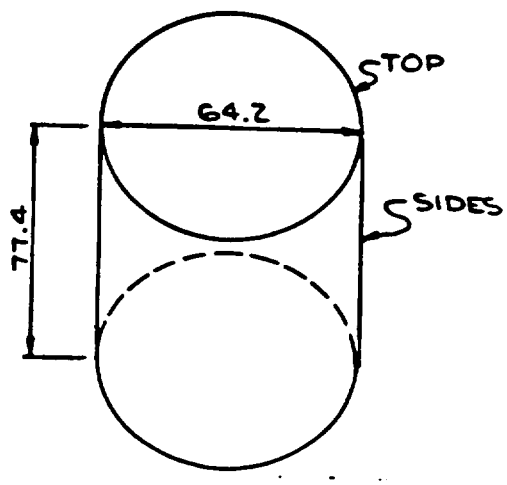

Area

Top 23.2 ft^2

Side 104.6 ft^2

Total 127.8 ft^2

Figure 3-2. Cask Solar Heat Load Model

The total heat flux which the cask is required to reject is the sum of the solar decay heat loads:

$$q'_{total} = q'_{solar} + q''_{decay\ heat}$$

$$q'_{total} = (144\ Btu/hr\text{-}ft^2)\ (F)(a) + \frac{(205\ Btu/hr)}{127.8\ ft^2}$$

where F is the cask's solar view factor = .42

and a is the cask's solar radiation absorbancy = .95

$q_{total} = 57.6\ Btu/hr\text{-}ft^2 + 1.6\ Btu/hr\text{-}ft^2 = 59.2\ Btu/hr\text{-}ft^2$

The surface temperature is determined by the total amount of heat which can be rejected at the cask surface by means of convection and radiation. This is determined by iterative solution for the surface temperature in the following heat balance:

$$q''_{total} = q''_{rejected} = q''_{convection} + q''_{radiation}$$

$$q''_{total} = h(t_s - 130) \quad 0.1738\ F\left[\left(\frac{t_s + 460}{100}\right)^4 - \left(\frac{130 + 460}{100}\right)^4\right]$$

where:

t_s = equilibrium surface temperature, °F

h = convection film coefficient, $Btu/hr\text{-}ft^2\text{-}°F$

= $0.18\ (t_s - 130)^{1/3}$ (Ref. 3-1)

F = shape factor for heat rejection to cask surroundings consistent with entire cask surface area = 0.8

The equilibrium surface temperature which satisfies this equation is 163°F which is well below the 180°F limiting temperature.

$$q'_{total} = q'_{solar} + q''_{decay\ heat}$$

$$q'_{total} = (144\ Btu/hr\text{-}ft^2)\ (F)(a) + \frac{(205\ Btu/hr)}{127.8\ ft^2}$$

where F is the cask's solar view factor = .42

and a is the cask's solar radiation absorbancy = .95

$q_{total} = 57.6\ Btu/hr\text{-}ft^2 + 1.6\ Btu/hr\text{-}ft^2 = 59.2\ Btu/hr\text{-}ft^2$

The surface temperature is determined by the total amount of heat which can be rejected at the cask surface by means of convection and radiation. This is determined by iterative solution for the surface temperature in the following heat balance:

$$q''_{total} = q''_{rejected} + q''_{convection} + q''_{radiation}$$

$$q''_{total} = h(t_s - 130) + 0.1738\ F \left[\frac{t_s}{100} + 4.6\right]^4 - \left[\frac{460 + 130}{100}\right]^4$$

where:

t_s = equilibrium surface temperature, °F

h = convection film coefficient, $Btu/hr\text{-}ft^2\text{-}°F$

= $0.18\ (t_s - 130)^{1/3}$ (Ref. 3-1)

F = shape factor for heat rejection to cask surroundings consistent with entire cask surface area = 0.8

The equilibrium surface temperature which satisfies this equation is 163°F which is well below the 180°F limiting temperature.

The temperature gradient through the cask determines the maximum temperature of the waste. The total gradient was calculated using the conduction equation for cylinders:

$$q' = \frac{2ki}{\frac{r_i+1}{r_i}}(t_s - t_w)$$

$$q' = \frac{(205 \text{ Btu/hr})\ (12 \text{ in/ft})}{62 \text{ in}} = 39.6 \text{ Btu/hr-ft}$$

where:

k_i = material thermal conductivity, Btu/hr-ft-°F

r_i, r_i+1 = material inner and outer radii

t_w = maximum temperature of the container wall, °F

t_c = maximum waste temperature, at the center line, °F

The material constants are as follows:

Component	k (Btu/hr-ft-°F)
Insulation	0.083
Outer Steel Shell	25
Lead	18.6
Inner Steel Shell	25
Gap	0.018
Container Wall	25
Resins	0.2

The temperature rise through the resin was calculated assuming uniform volumetric heat generation through the waste according to the following formula:

$$t_c = t_w + \frac{q'}{4\pi k_{resin}}$$

The maximum waste resin temperature (t_c) under these conditions is 188°F, this temperature is sufficiently low to preclude the boiling of any liquid which may be present in the waste. The thermal profile through the waste is illustrated in Figure 3-1. The resin conductivity was assumed to be that of polyethylene. The solid non-process type waste will have a much higher thermal conductivity and will be less severe with repsect to maximum temperature.

3.4.3 Minimum Temperatures

The purpose of this analysis is to verify the integrity of the cask when exposed to a sustained temperature of -40°F. The amount of decay heat emanating from the radioactive wastes is conservatively assumed to be insufficient to prevent freezing of the moisture entrained with the waste sludge or slurry. This analysis will determine whether the void volume in the cask is well in excess of the expanded volume of the frozen moisture. Cross section of a single disposable container is shown in Figure 3-3.

The packing fractions for various sludges and slurries have been measured experimentally. These measurements indicate that the entrained moisture content will normally be less than 30 percent of the total waste volume. The limiting case will be for the single container process waste configuration which has a 70.2 ft^3 waste volume.

The expansion volume of ice is 1.09 times the original volume of moisture. This predicates a need for a void space equal to nine percent of the total moisture volume, or

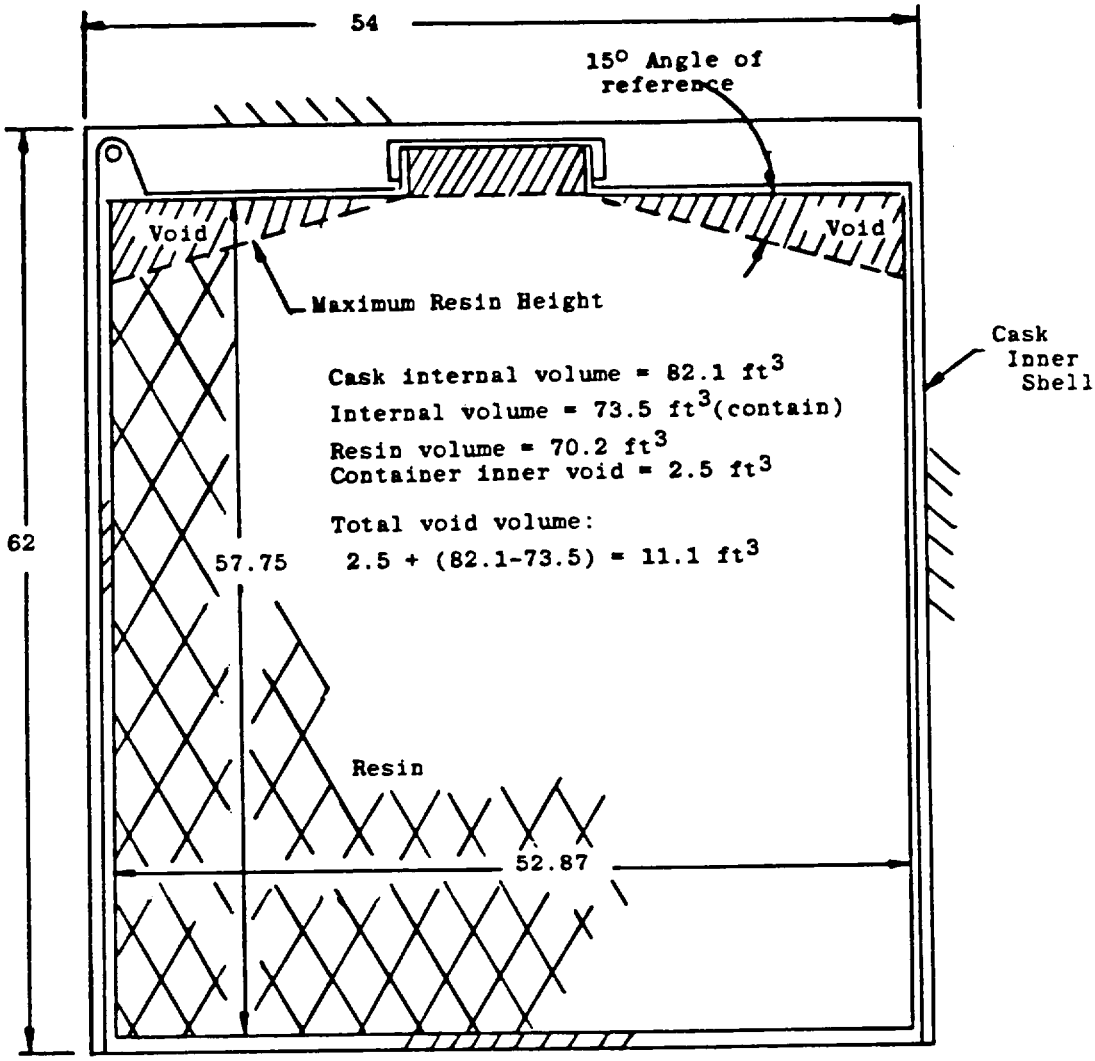

Figure 3-3. Single Disposable Container Configuration Filled with Process Waste Resin

70.2 ft^3 waste x (3/7 ft^3 moisture/ft^3 waste) x 0.09 = 2.7 ft^3 of void. The total void volume in the cask plus container is at least 11.1 ft^3 or 4.1 times the required space. Hence, there is no problem due to the formation of ice.

The materials selected for steel forging, bolting material, and seals are designed to be adequate at -40°F.

3.4.4 Maximum Internal Pressures

The nature of waste which is being transported combined with the range of temperature discussed does not promote conditions which would produce phase change, gas generation or chemical decomposition that would cause an over pressurization of the cask.

3.4.5 Maximum Thermal Stresses

The temperatures shown in Figure 3-1 will not create thermal stresses in excess of minimum yield for the materials shown.

3.4.6 Evaluation of Package Performance for Normal Conditions of Transport

Included in Sections 3.4.1 - 3.4.5.

3.5 Hypothetical Accident Thermal Evaluation

3.5.1 Thermal Model

A one-dimensional radial model of transient thermal response in the cask as shown in Figures 3-4 and 3-5 was developed to simulate the fire environment response (1475°F radiation environment of 30 minutes duration as specified in 10 CFR-71). The TAP-4 (Thermal Analyzer Program) computer program model was used.

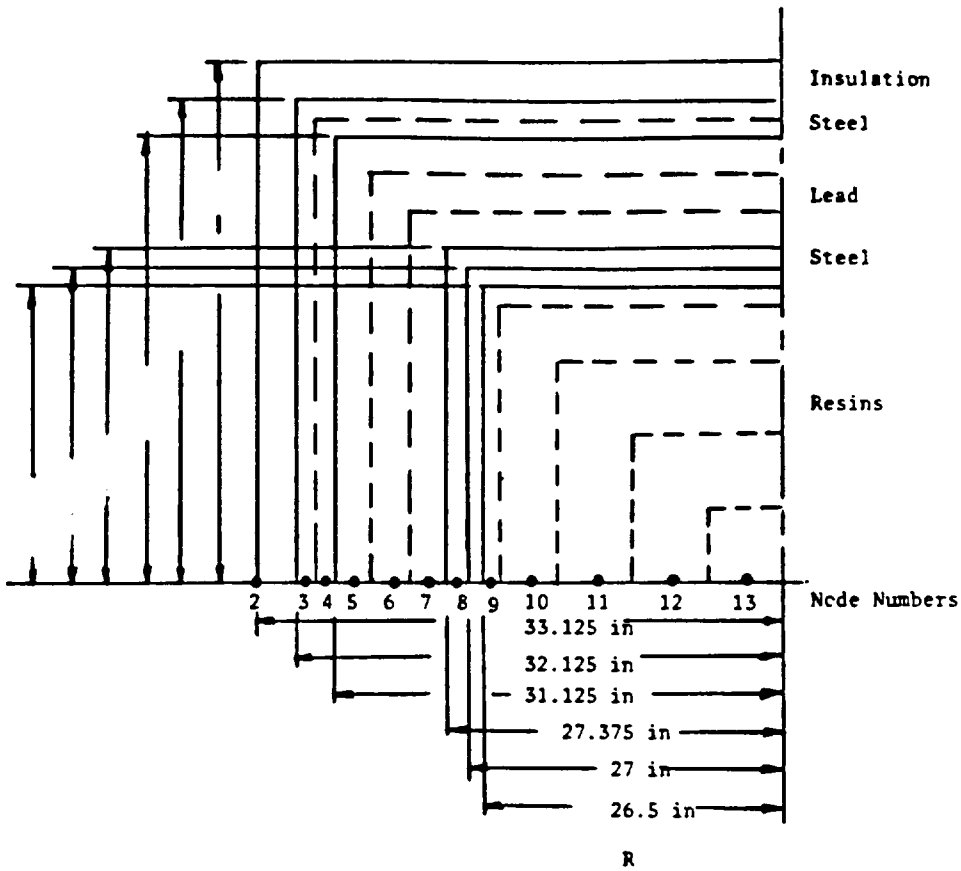

Figure 3-4 Fire Accident Computer Model

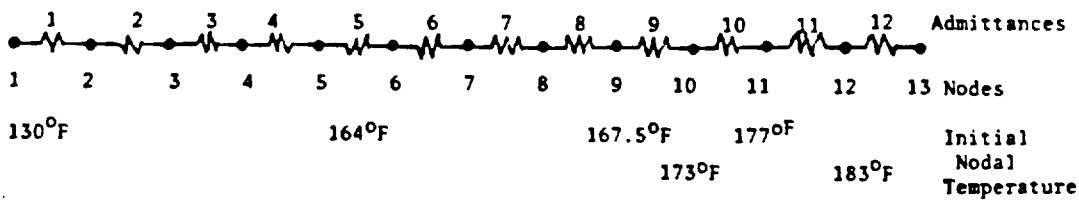

Figure 3-5 Nodal Temperature Model

The TAP-4 program solves transient problems in a network of conductors and capacitors using forward differencing of the basic heat transfer equation (1).

$$\frac{\partial^2 T}{\partial r^2} + \frac{1}{r} + \frac{\partial T}{\partial r} + q'''/k = \frac{sc}{k} \frac{\partial T}{\partial \theta}$$

where:

k = thermal conductivity, (Btu/hr-ft-°F)

T = temperature (°F)

q'''= volumetric heat generation rate, (Btu/hr-ft^3)

c = heat capacity, (Btu/lb-°F)

s = material density, (lb/ft^3)

θ = time

The resulting forward difference equation (2)

$$T_{(i,\theta+\Delta\theta)} + \frac{\Delta\theta}{Ci} \left(Q_i + {}_j Y_{i,\,j} T_{j,\,\theta} - T_{i,\,\theta} {}_j \Sigma Y_{i,\,j}\right)$$

is then solved using a fraction of the stable time step (3)

$$(\Delta\theta)_{stable} = \frac{C_i}{\sum_j Y_{i,j}} \qquad \text{least value for the set i.}$$

where:

$Y_{i,j}$ is the admittance between nodes i and j

i refers to the node being considered

j refers to the various nodes connected to i

The thermal simulation consisted of a 13 node model connected with 12 resistors as shown in Figure 3-5. Node 1 simulates the environment in which a fire is

seering. Its temperature was held at 1475°F for 0.5 hour and then changed to 130°F for the remainder of the transient. Node 2 represents the outside of the insulation. Nodes 3 and 4 span the carbon steel outer shell. The lead is modeled between nodes 5-7. The latent heat of fusion for lead does not need to be considered in this model because the insulation keeps the lead far below its melting temperature. The inner shell is represented by node 3 and the disposable resin container by node 9. The resins are modeled in nodes 10 through 13.

The fire environment was taken as 1475°F with an emissivity of 0.9 to the cask surface having an absorptivity of 0.8. The emissivity of the cask surface was assumed to be 0.5. The entire cask surface area of 160 ft^2 was conservatively assumed to be exposed to the fire with the cask-to-fire view factor of unity. After the 30 minute fire, the cask was assumed to be cooled by natural convection to a 130°F ambient. The convective heat transfer coefficeint was computed using equation:

$$h = 0.18(T_2 - T_1)^{1/3} \qquad \text{(Ref. 3-1 pg. 135)}$$

where:

h is the heat transfer coefficient, Btu/hr-ft^2-°F

T_2 is the cask surface temperature, °F

T_1 is the ambient air temperature, °F

Conduction was considered for admittances 2 through 7 and 9 through 12 for cylindrical walls with bottom and top ends. Convection in the air and radiation between nodes 8 and 9 was considered (between cask inner liner surface and disposable resin container). The emissivities between these surfaces were both assumed to be 0.5, and the view factor based on the inner cylindrical area is

unity. The presence of an air gap is assured by the several strips of wood between the exterior of the disposable container and inner shell wall, bottom and top.

$$Y = \frac{2\pi kL}{\ell n(R_1/R_2)} + \frac{kA_T}{t_T} + \frac{kA_B}{t_B}$$

where:

L is the cylinder length, ft.

R_1, R_2 are the nodal radii, in.

k is the thermal conductivity, Btu/hr-°F-ft

Y is admittance, Btu/hr-°F

A_T is the area of the top end of annular element, ft^2

T_1 is the area of the bottom end, ft^2

t_B is the thickness of the top end, ft.

The initial temperature of all nodes is shown in Figure 3-5. An internal heat generation rate of approximately 1 watt/ft^3 was conservatively included in the resin.

The thermal properties which were used are given in Table 3-2.

TABLE 3-2. THERMAL PROPERTIES

	Carbon Steel	Lead	Insulation	Resins
Thermal conductivity, Btu/hr-ft-°F	25	18.6	0.083	0.2
Heat capacity, Btu/lb	0.10	0.0325	-----	0.6
Density, lb/ft^3	0.283	0.410	-----	0.036

These resins were modeled using only conduction since the internal convection cells are very small. This tends to give the maximum resin temperature which will occur on the outermost surface due to the external heat load.

The contents will have thermal properties with a range of values due to the different possible forms of the radwaste. The steady-state temperature profile is directly dependent upon the thermal conductivity of the contents. By using the lowest thermal conductivity (0.2 Btu/hr-ft-°F) of the contents, the highest outside surface temperature is predicted for the fire accident. Using the lowest thermal conductivity minimizes the taking up of source (fire) heat as sensible heat in the low temperature regions of the waste.

A contents thermal conductivity of 0.2 Btu/hr-ft-°F is expected to be the lowest and therefore most conservative value for the radwaste contents. The thermal conductivity of concrete varies between 0.2 to 0.7 depending on consistency and moisture content. The thermal conductivity of dry sand is 0.2, but with only 10 percent moisture the conductivity rises to 0.6. The resins, even when drained, retain approximately 50 percent moisture by weight and their thermal conductivity is approximately that of water, 0.4 Btu/hr-ft-°F. Before shipment, all contents would contain enough water to allow the bulk conductivity of the radwaste to be 0.2 Btu/hr-°F-ft or greater.

3.5.2 Package Conditions and Environment

After the free drop or puncture tests, the effect of any such damage on the package thermal performance is to be evaluated. As evaluated in Section 2, the free drop or puncture test did not compromise the integrity of the cask. One (1) inch of outer steel shell and the impact skirts are sufficient to prevent any failure of the vessel, even followed by the fire test.

3.5.3 Package Temperatures

The temperature response of the cask is presented in Figure 3-6 as a function of time after initiation of the accident. The temperatures represent the node average temperature of each shell modeled. The foam impact skirts provide extra insulation, keeping the corner temperatures very near the average. The maximum cask wall temperature during this transient is 230°F. The cask contents reach a maximum temperature of only 193°F, assuming no convective film temperature drop. This is well below the boiling temperature of the content's residual moisture.

3.5.4 Maximum Internal Pressures

The nature of the waste which is being transported, combined with the temperature ranges discussed, does not promote conditions which would result in phase change, gas generation, or chemical decomposition which would cause an overpressurization of the cask.

3.5.5 Maximum Thermal Stresses

The temperature range discussed in Figures 3-5 and 3-6 will not create thermal stresses in excess of minimum yield for the materials shown.

3.5.6 Evaluation of Package Performance for the Hypothetical Accident Thermal Conditions

Included in Sections 3.5.1 - 3.5.5.

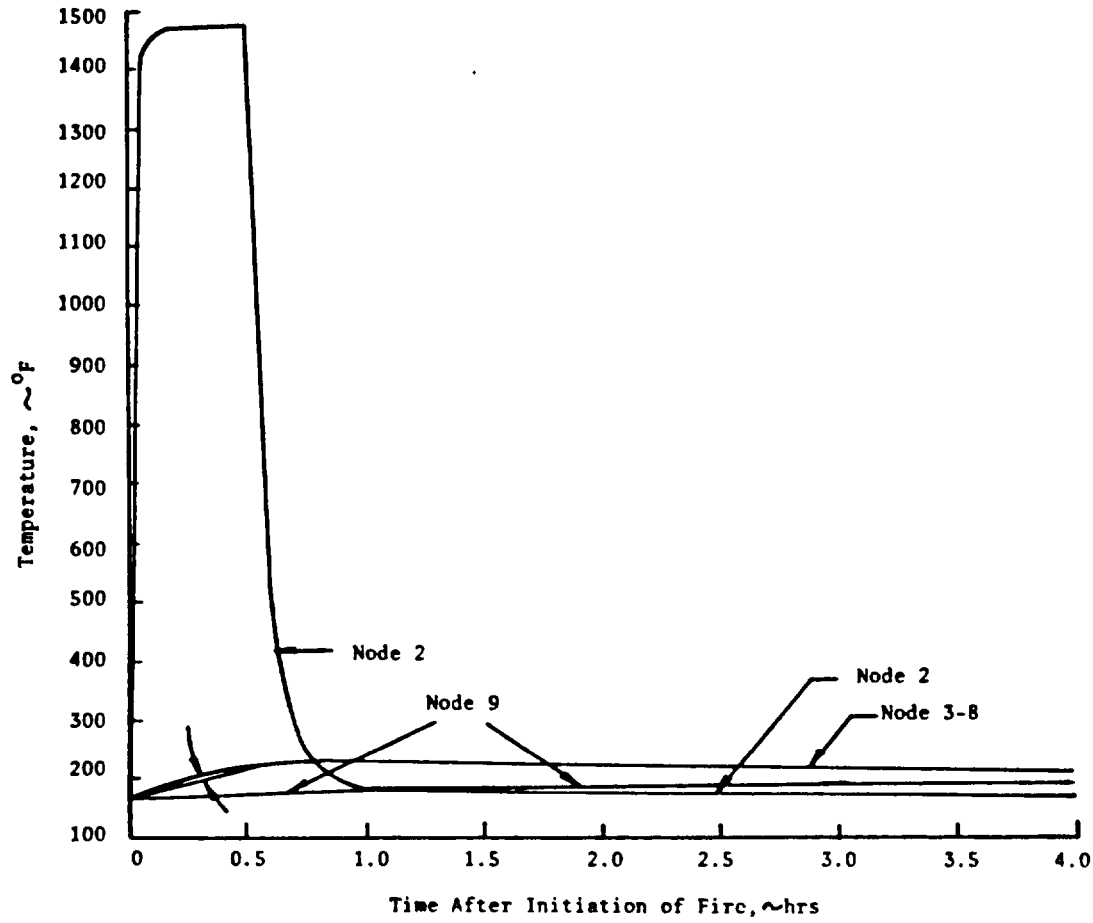

Figure 3-6 Fire Accident Time-Temperature Profile

3.6 Appendix

References

3-1 Shapport, L.B., Cask Designers Guide, ORNL-NSIC-68, February, 1970.

4.0 CONTAINMENT

4.1 Containment Boundary

The shipping cask is a vessel which encapsulates the radioactive material and provides primary containment and isolation of the radioactive material from the atmosphere while being transported.

4.1.1 Containment Vessel

4.1.1.1 Cask Body

The cask is an upright circular cylinder composed of layers of structural steel with lead for radiation shielding intermediate of the steel sheets. The inner and outer steel shells are connected at the top by a steel flange. The cask is closed on the bottom and the top has a large circular bolted access way or lid. The heavy steel flange connecting the annular steel shells at the top accepts the studs which attach the lid and provides a seat for a silicone gasket seal. This seal provides positive atmospheric isolation when the lid is closed by torquing the studs.

The outer steel shell is surrounded by a one inch thick layer of Johns-Manville insulation which in turn, is covered by a 11 gauge steel sheet.

The cask bottom consists of steel plates welded to the inner and outer cask shells. The inner shell bottom is 2.0 inches thick and the outer shell bottom is 1.0 inch thick. The intermediate lead shielding thickness is 2.38 inches.

The inner steel shell is designed to act as a pressure vessel when the cask lid is bolted to the cask body. This shell has been designed to withstand an internal pressure of 400 psi. The weld configurations which form the shell wall and bottom have been designed to withstand a bend on impact of 135° (as per Reference 4-1, pages 23-25). The stepped flanged surface, at the end of the cask body, has been constructed entirely of steel. The stepping of the flange has been designed to minimize effects of radiation streaming and problems associated with gasket damage during impact. Three steel lifting devices equally spaced at 120° on a 64 1/4 inch circle have been welded to the upper portion of the cask body. These lifting devices have been designed to be capable of lifting three times the total gross weight of the loaded cask.

4.1.1.2 Cask Lid

The main part of the cask lid is fabricated in the form of a steel-lead-steel disc mounted within and welded to two solid steel stiffening rings at the outer and inner edges. The steel outer ring is stepped and the surfaces machined to form mating surfaces which include a silicone gasket seal between the lid and the cask body.

4.1.1.3 Shield Plug

The shield plug is located in the center of the cask lid, and is composed of an inner steel shell of 1.5 inch thickness and an outer steel shell of 1.0 inch thickness with an intermediate shielding layer of lead 2.5 inches in thickness. The shield plug is bolted to the outer portion of the cask lid with studs. The

shield plug is gasket-sealed to the main outer portion of the cask lid with a silicone gasket seal which is retained by the tensile loading on the studs. The mating flange is stepped in a manner similar to that described in the previous section for the cask lid. The purpose of the shield plug is to allow access to containers within the cask with the cask lid in place for shielding.

4.1.2 Containment Penetrations

There are two containment penetrations possible on the 3-82B cask. The first is a 1-1/2 inch diameter gravity drain located at the bottom of the cask wall. This penetration is normally plugged. The plug assembly consists of a head socket attached to the outer end of a 1-1/4 inch diameter schedule 40 pipe, filled with lead. The plug assembly threads into the outer steel shell so that when it is installed, it becomes an integral part of the cask wall.

The second penetration is a vent/test connection located at the outer edge of the primary lid. This penetration is also normally plugged. This penetration is plugged with two pipe plugs and several lead cylinders. The first pipe plug is seated on the internal surface of the primary lid. The lead cylinders are placed in the primary lid to maintain the lid's shielding capability. Finally, the external plug is installed flush to the primary lid outer surface.

4.1.3 Seals and Welds

The size and type of all structural welds are shown on the cask certification drawings. Welding is done per the ASME Boiler and Pressure Vessel Code. The cask is designed such that no one weld failure will cause a loss of containment integrity.

4.1.4 Closure

The top has a large circular bolted access way or lid. The heavy steel flange connecting the annular steel shells at the top accepts the studs which attach the lid and provides a seat for a silicone gasket seal. This seal is used to provide positive atmospheric isolation when the lid is closed by torquing the closure studs. Torquing requirements are specified as 190 to 210 ft-lbs for the cask lid. The shield plug is bolted to the outer portion of the cask lid. Torquing requirements are specified as 35 to 40 ft-lbs for the shield plug.

Sealing of the cask is accomplished at both the:

(a) bolted joint between the cask body and the cask lid and

(b) the bolted joint between the cask lid and the shield plug.

These joints are sealed by circumferential silicone gasket seals loaded in compression by the bolt tension. Silicone is a specialty elastomer designed to remain serviceable over an extremely wide range of temperatures. Silicone is suitable for continuous service at temperatures up to 400°F and are also flexible at temperatures as low as -150°F. Silicone is generally more flame resistant then general purpose elastomers.

4.1.4.1 Deleted

(Intentionally Blank)

(Intentionally Blank)

4.1.4.2 Deleted

(Intentionally Blank)

4.1.4.3 Primary Cask Lid Gasket Design

Gasket O.D. = 63.50 inches

Gasket I.D. = 59.00 inches

Gasket Thickness = 0.375 inches

Gasket Durometer = 40

Gasket Material = Silicone

Determine the amount of compression of the primary lid gasket due to the torquing of the primary lid bolts assuming an average torquing value of 200 ft-lbs.

Average Preload (Tension) per Bolt $= \dfrac{\text{Applied Torque}}{.2d}$

$= \dfrac{(200 \text{ ft-lbs})\ (12 \text{ in/ft})}{.2(.838 \text{ in})}$

$= 14{,}320$ lbs/bolt

Total Preload (Tension) $= 24 \times 14{,}320$ lb.

$= 343{,}680$ lbs.

Area of Gasket $= [\pi(63.50^2 - 59.00^2)/4] - \dfrac{24\ \pi\ (1.5)^2}{4}$

$= 390.5 \text{ in}^2$

Equivalent Pressure on Gasket $= \dfrac{\text{Tension}}{\text{Area}}$

$= \dfrac{343{,}680 \text{ lbs}}{390.5 \text{ in}^2}$

$= 880$ psi

As shown on the nomograph (page 4-9) the compression of the gasket due to the tightening of the primary lid bolts is approximately 21% of the gasket thickness.

Over compression of the gasket during an accident condition drop is prevented by a 3/16 inch thick and 1 inch wide carbon steel ring. This ring will prevent the gasket from compressing more than 50%.

4.1.4.4 Secondary Cask Lid Gasket Design

Gasket O.D. = 21.75 inches

Gasket I.D. = 19.25 inches

Gasket Thickness = 0.375 inches

Gasket Durometer = 40

Gasket Material = Silicone

Determine the amount of compression of the secondary lid gasket due to the torquing of the secondary lid bolts assuming an average torque value of 37.5 ft-lbs.

Average Preload (Tension) per Bolt $= \dfrac{37.5 \text{ ft-lbs } (12 \text{ in/ft})}{.2(.400 \text{ in})}$

$= 5{,}625$ lb/bolt

Total Preload (Tension) $= 16 \times 5{,}625$

$= 90{,}000$ lbs

Area of Gasket $= \dfrac{\pi(21.75^2 - 19.25^2)}{4} - \dfrac{16\pi(.75)^2}{4}$

$= 73.4 \text{ in}^2$

Equivalent Pressure on Gasket $= \dfrac{90{,}000 \text{ lbs}}{73.4 \text{ in}^2}$

$= 1{,}226$ psi

As shown on the nomograph (page 4-10) the compression of the gasket due to the tightening of the secondary lid bolts would exceed 35% of the gasket thickness. The over compression of the gasket from the bolt torquing is prevented by a 1/4 inch thick and 3/4 inch wide carbon steel ring. This ring will prevent the gasket from compressing more than 33% due to the bolt torquing. Over compression of the gasket during an accident condition drop is also prevented by this carbon steel ring.

3-82B CASK
PRIMARY LID
GASKET

ALIGNMENT CHART FOR THE CALCULATION OF DEFLECTIONS OF RUBBER SANDWICHES UNDER STATIC COMPRESSION LOADS

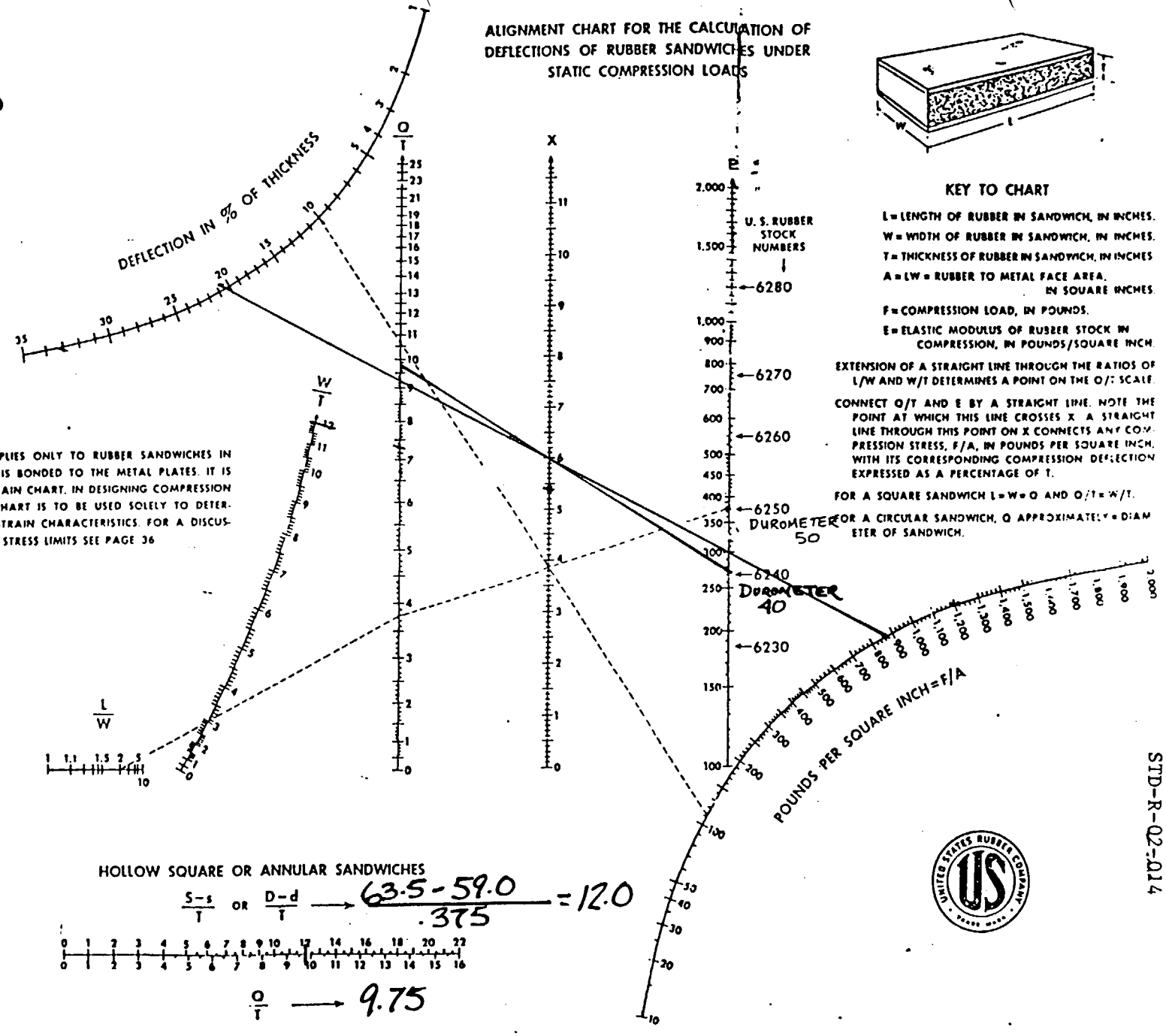

THIS CHART APPLIES ONLY TO RUBBER SANDWICHES IN WHICH THE RUBBER IS BONDED TO THE METAL PLATES. IT IS SIMPLY A STRESS-STRAIN CHART. IN DESIGNING COMPRESSION SANDWICHES THIS CHART IS TO BE USED SOLELY TO DETERMINE THEIR STRESS-STRAIN CHARACTERISTICS. FOR A DISCUSSION OF PRACTICAL STRESS LIMITS SEE PAGE 36

KEY TO CHART

L = LENGTH OF RUBBER IN SANDWICH, IN INCHES.

W = WIDTH OF RUBBER IN SANDWICH, IN INCHES.

T = THICKNESS OF RUBBER IN SANDWICH, IN INCHES

A = LW = RUBBER TO METAL FACE AREA, IN SQUARE INCHES.

F = COMPRESSION LOAD, IN POUNDS.

E = ELASTIC MODULUS OF RUBBER STOCK IN COMPRESSION, IN POUNDS/SQUARE INCH.

EXTENSION OF A STRAIGHT LINE THROUGH THE RATIOS OF L/W AND W/T DETERMINES A POINT ON THE O/T SCALE.

CONNECT O/T AND E BY A STRAIGHT LINE. NOTE THE POINT AT WHICH THIS LINE CROSSES X. A STRAIGHT LINE THROUGH THIS POINT ON X CONNECTS ANY COMPRESSION STRESS, F/A, IN POUNDS PER SQUARE INCH, WITH ITS CORRESPONDING COMPRESSION DEFLECTION EXPRESSED AS A PERCENTAGE OF T.

FOR A SQUARE SANDWICH L = W = O AND O/T = W/T.

FOR A CIRCULAR SANDWICH, O APPROXIMATELY = DIAMETER OF SANDWICH.

HOLLOW SQUARE OR ANNULAR SANDWICHES

$\frac{S-s}{T}$ OR $\frac{D-d}{T}$ $\longrightarrow \frac{63.5-59.0}{.375} = 12.0$

$\frac{O}{T} \longrightarrow 9.75$

STD-R-02-014

3-82B CASK
SECONDARY LID
GASKET

ALIGNMENT CHART FOR THE CALCULATION OF DEFLECTIONS OF RUBBER SANDWICHES UNDER STATIC COMPRESSION LOADS

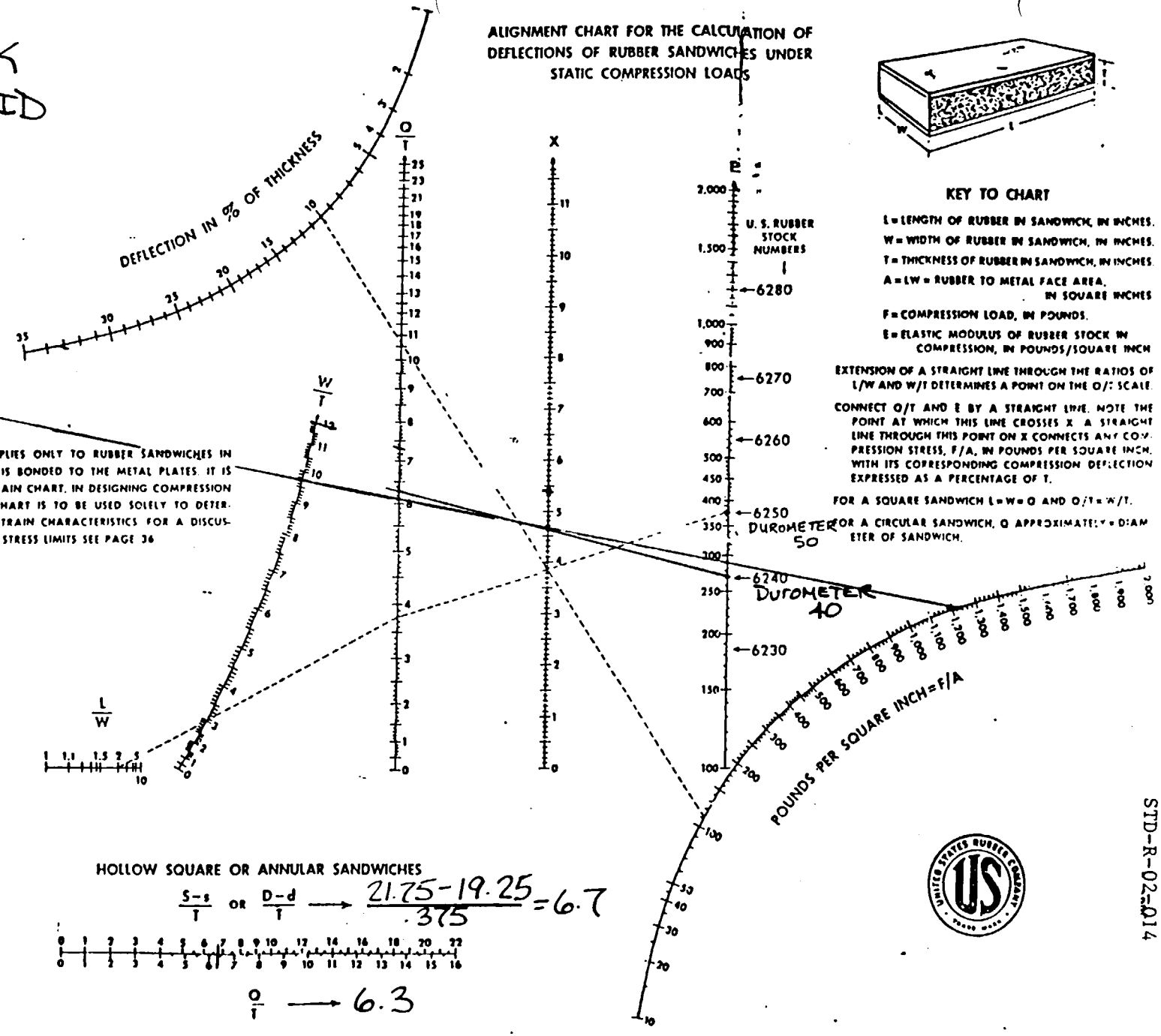

THIS CHART APPLIES ONLY TO RUBBER SANDWICHES IN WHICH THE RUBBER IS BONDED TO THE METAL PLATES. IT IS SIMPLY A STRESS-STRAIN CHART. IN DESIGNING COMPRESSION SANDWICHES THIS CHART IS TO BE USED SOLELY TO DETERMINE THEIR STRESS-STRAIN CHARACTERISTICS. FOR A DISCUSSION OF PRACTICAL STRESS LIMITS SEE PAGE 36

KEY TO CHART

L = LENGTH OF RUBBER IN SANDWICH, IN INCHES.
W = WIDTH OF RUBBER IN SANDWICH, IN INCHES.
T = THICKNESS OF RUBBER IN SANDWICH, IN INCHES.
A = LW = RUBBER TO METAL FACE AREA, IN SQUARE INCHES
F = COMPRESSION LOAD, IN POUNDS.
E = ELASTIC MODULUS OF RUBBER STOCK IN COMPRESSION, IN POUNDS/SQUARE INCH

EXTENSION OF A STRAIGHT LINE THROUGH THE RATIOS OF L/W AND W/T DETERMINES A POINT ON THE O/T SCALE.

CONNECT O/T AND E BY A STRAIGHT LINE. NOTE THE POINT AT WHICH THIS LINE CROSSES X. A STRAIGHT LINE THROUGH THIS POINT ON X CONNECTS ANY COMPRESSION STRESS, F/A, IN POUNDS PER SQUARE INCH, WITH ITS CORRESPONDING COMPRESSION DEFLECTION EXPRESSED AS A PERCENTAGE OF T.

FOR A SQUARE SANDWICH L = W = O AND O/T = W/T.

FOR A CIRCULAR SANDWICH, O APPROXIMATELY = DIAMETER OF SANDWICH.

HOLLOW SQUARE OR ANNULAR SANDWICHES

$\frac{S-s}{T}$ OR $\frac{D-d}{T}$ $\longrightarrow \frac{21.75-19.25}{.375} = 6.7$

$\frac{O}{T} \longrightarrow 6.3$

STD-R-02-014

4.2 Requirements for Normal Conditions of Transport

4.2.1 Release of Radioactive Material

As described in Section 1.2.3, the contents of package may consist of (a) process solids produced as radioactive waste which has been either dewatered or solidified, or (b) irradiated and surface contaminated hardware components. Process solids, specifically dewatered BWR and PWR spent resins from reactor coolant cleanup systems, are used to define the cask containment requirements for similarly dispersible contents in Section 4.2.1.1. Similar resins immobilized by solidification are used to define in Section 4.2.1.2 the cask containment requirements applicable to solidified contents. Resins have been selected for this analysis in each case, dewatered or solidified, because of the high activity levels often associated with them and the gaseous activity that can arise from the radionuclides fixed on the resins.

All processed solids and other waste forms to be shipped in this cask are processed and prepared for shipment such that any free water in the waste has been removed. Procedures are also used to preclude any significant incidental liquids (e.g., condensation, rain water) within the containment system. Therefore, the release of liquids is not a case to be considered in this analysis.

4.2.1.1 Containment Requirements for Dispersible, Unsolidified Contents

As described in Section 1.2.3, the anticipated powdered resins will have an average particle size of 0.05 mm. Under normal transport conditions these solids would not escape the secondary container. However, taking no credit for this container, Section 2.6 of this report demonstrates that the cask containment seal is always maintained during the conditions and thus, release of solids of this size would be precluded.

Gaseous radioactivity could be present in the package as a result of the radionuclides carried on the resins. Specifically, gaseous xenon isotopes can be predicted to decay from the iodines normally fixed to reactor cleanup resins. Any iodine in the gas phase is expected to have been released from the resin during plant operations and subsequent processing for shipment.

Reference 4.2 provides data concerning the isotopes and respective activity fractions common in highly loaded resins. I-131 is the predominant isotope of concern, with reported activity fractions ranging up to 2.2% (Ref. 4.2, Table C.6). This data is borne out by Hittman's historical shipping record as well. I-133 is reported by some plants (though not at the plant reporting the highest I-131 activity fraction) in fractions approximately equal to those of I-131. As a result, for this analysis, we have conservatively assumed initial activity fractions of 2.2% for both isotopes.

The following additional inputs to this containment analysis are taken or calculated from other sections of this report:

a)	Maximum total activity in waste	3500 Ci (Table 5-1)
b)	Cask internal volume	82.1 ft^3 (Figure 3.3)
c)	Maximum resin volume (including interstices) (large container)	70.2 ft^3 (Figure 3.3)
d)	Approx. interstitial void volume in resin (30% of (c))	21.1 ft^3
e)	Total void (air) volume in the cask ((b)-(c)+(d) - vol. of container material= (82.1-70.2+21.1-1)ft^3)	32 ft^3

Assuming I-131 and I-133 activity fractions of 2.2%, the following activities are predicted:

Activity (I-131, I-133) = 2.2% x (max. total activity)

= 0.022 x 3500 Ci

= 77 Ci

The production and decay of the xenon isotopes Xe-131m, Xe-133m and Xe-133 is assumed to begin with closure of the cask containment boundary. The maximum activity of each isotope is assumed to be reached simultaneously (an impossible condition but conservative for this analysis) during shipment (improbable, but again conservative, for Xe-131m as it requires approximately 14 days to reach the peak activity).

The respective maximum activities assumed are then:

Xe-131m	0.14 Ci	(1.3%)
Xe-133m	2.3 Ci	(21.4%)
Xe-133	8.3 Ci	(77.3%)
	10.74 Ci	100%

The A_2 value for this assumed gas mixture is:

$$A_2 = \left(\frac{0.013}{100\ \text{Ci}} + \frac{0.214}{1000\ \text{Ci}} + \frac{0.773}{1000\ \text{Ci}} \right)^{-1}$$

$$A_2 = 895\ \text{Ci}$$

The maximum possible release rate for normal conditions of transport is then:

$R_N \leq A_2$ x E-06 Ci/hr (10CFR71.51)

$R_N \leq 895$ E-06 Ci/hr

The remainder of this analysis follows the guidance of Reference 4.3.

The gaseous activity concentration during normal conditions of transport, C_N, that is available to escape the containment is assumed uniform. That is, it is equal to the total gaseous activity divided by the total void volume in the cask, or

$C_N = 10.74\ Ci/32\ ft^3$ (from (c)&(g))

$C_N = 0.34\ Ci/ft^3$

The maximum permissible leakage rate for the medium (predominantly air) in the containment during normal conditions of transport, L_N, is determined by

$L_N \leq R_N/C_N$

$L_N \leq (895\ E\text{-}06\ Ci/hr)/(0.34\ Ci/ft^3)$

$L_N \leq 2.6\ E\text{-}03\ ft^3/hr\ (hr/3600\ sec)\ (30.48\ cm/ft)^3$

$L_N \leq 2.1\ E\text{-}02\ cm^3/sec$

A reference air leakage rate for normal conditions of transport, L_{RN}, at standard conditions can be calculated based on the following:

Maximum cask internal temperature	188°F(1)	(Section 3.4.2)
Minimum cask internal temperature	-40°F	(Section 3.4.3)
Maximum cask internal pressure	1.54 atm abs(2)	
Assumed leakage path length	0.231 inches	(Secondary gasket groove width)

(1) Assumes internal void volume temperature is equal to maximum resin temperature due to insolation, maximum decay heat, and high ambient temperature.

(2) Assumes cask closed at -40°F and maximum internal temperature reached during shipment. With no volume change, $P_{max} = P_{initial} (T_{max}/T_{min})$ = (1 atm abs) (360°K/233°K) = 1.54 atm abs.

Accordingly, the reference air leakage rate is by calculation:

L_{RN} = 4.3 E-02 Std cm^3/sec.

The required leak test procedure sensitivity, S_{RN}, is less then or equal to one-half the reference air leakage rate (when adjusted for test conditions), or

$S_{RN} \leq 1/2\ L_{RN}$

$S_{RN} \leq$ 2.2 E-02 Std cm^3/sec

The leak test method used to demonstrate satisfaction of these containment requirements to the specified sensitivity is described in Section 8.2.2.

4.2.1.2 Containment Requirements for Solidified Contents

Process solids immobilized by solidification will withstand normal conditions of transport without significant deterioration of the solidified product monolith within the secondary container. Significant quantities of fine, dispersible solids would thus not be anticipated. The formation of radioactive gases would proceed as in the case of dewatered resin but the escape of the gases to the cask void volume would be restricted. Finally, the solidification process may dilute the waste so as to reduce the overall activity levels and the evolution of gaseous activity.

Therefore, in the case of solidified contents, the containment requirements for the hypothetical accident condition will take precedence. Refer to Section 4.3.2.2 for this discussion.

4.2.2 Pressurization of the Containment Vessel

During normal conditions of transport, the maximum internal pressure would 1.54 atm abs (See Section 4.2.1) or 7.9 psig. This pressure peak would be attributed to worst-case, combined thermal effects.

The cask is designed to withstand a differential pressure of 25 psi.

4.2.3 Coolant Contamination

There is no primary coolant associated with the 3-82B cask. Therefore, this paragraph does not apply.

4.2.4 Coolant Loss

This is no primary coolant associated with the 3-82B cask. Therefore, this paragraph does not apply.

4.3 Containment Requirements for Hypothetical Accident Conditions

4.3.1 Fission Gas Products

The nature of the waste contents (non-fissionable) does not produce gas products.

4.3.2 Releases of Contents

The discussion and analysis presented in Section 4.2.1 (releases of radioactive materials for normal conditions of transport) is largely applicable to a discussion and analysis of the containment requirements for hypothetical accident conditions. Where differences exist, they shall be noted in the following analyses.

4.3.2.1 Containment Requirements for Dispersible, Unsolidified Contents

As in Section 4.2.1.1, the containment requirements for hypothetical accident conditions involving dispersible, unsolidified contents are evaluated assuming a single, large container of dewatered reactor coolant resins as the contents. Under hypothetical accident conditions, the secondary container would be expected to be breached and limited amounts of the contents released to the cask containment system. For this analysis, however, no credit at all will be taken for the secondary container.

Section 2.7 of this report demonstrates that the cask containment seal is always maintained during hypothetical accident conditions and no geometry or volume changes to the containment system result. The retention of contents solids and gases in accordance with the containment design objectives is therefore ensured.

The evolution of radioactive xenon from the iodine isotopes fixed on the resins will be the same as evaluated in Section 4.2.1.1. A gaseous activity value of 10.74 Ci with an A_2 value of 895 Ci is predicted assuming worst-case contents.

The maximum permissible release rate for hypothetical accident conditions is:

$R_A \leq A_2$ in one week

$R_A \leq 895$ Ci in one week

$R_A \leq 5.33$ Ci/hr

The gaseous activity concentration during hypothetical accident conditions, C_A, is equal to that during normal conditions, or

$C_A = C_N$ (Section 4.2.1.1)

$C_A = 0.34$ Ci/ft^3

The maximum permissible leakage rate for the medium (predominantly air) in the containment during hypothetical accident conditions of transport, L_A, is determined by:

$L_A \leq R_A/C_A$

$L_A \leq (5.33 \text{ Ci/hr})/(0.34 \text{ Ci/ft}^3)$

$L_A \leq 15.7 \text{ ft}^3\text{/hr (hr/3600 sec) (30.48 cm/ft)}^3$

$L_A \leq 123 \text{ cm}^3\text{/sec}$

A reference air leakage rate for accident conditions of transport, L_{RA}, at standard conditions can be calculated based on the following:

Maximum cask internal temperature	193°F (Section 3.5.3)
Minimum cask internal temperature	-40°F (Section 3.4.3)
Maximum cask internal pressure	1.55 atm abs(1)

(1) Assume cask sealed at -40°F and maximum internal temperature attained during fire conditions. With no volume change, $P_{max} = P_{initial} (T_{max}/T_{min})$ = (1 atm abs) (362°K/233°K) = 1.55 atm abs.

The cask internal conditions indicated above are virtually the same as in the case of the normal conditions (Section 4.2.1.1). Give this and L_A much less stringent than L_N, the containment requirements for normal conditions of transport will govern the selection of the leak rate testing method to be used on the cask when the contents are dispersible, unsolidified contents.

4.3.2.2 Containment Requirements for Solidified Contents

Under hypothetical accident conditions, the integrity of the solidified waste product and the secondary container can be expected to be significantly impaired. For this analysis, it will be assumed that the waste product is sufficiently broken up so as to instantly release the gaseous decay products to the cask containment volume. As in Section 4.3.2.1, no credit is taken for the secondary container.

Though it is realistic to predict a total gaseous activity level in the containment system that is less than that of Section 4.2.1.1 (because of dilution), it is conservative to assume this same mixture exists in the cask free internal volume in this analysis.

The following inputs then become part of this analysis:

a) Cask internal volume	82.1 ft^3	(Figure 3.3)
b) Maximum solidified product volume	59.4 ft^3	

c)	Waste volume in solidified product	48 ft^3
d)	Total void (air) volume in the cask ((a)-(b)-vol. of container material = (82.1-59.4-3)ft^3)	19.7 ft^3
e)	Total gaseous activity	10.74 Ci (Section 4.2.1.1)
f)	A_2 for xenon mixture	895 Ci (Section 4.2.1.1)

The maximum permissible release for hypothetical accident conditions of transport is:

$R_A \leq 5.33$ Ci/hr (Section 4.3.2.1)

The gaseous activity concentration during hypothetical accident conditions, C_A, is the total gaseous activity divided by the total void volume in the cask, or

$C_A = 10.74$ Ci/19.7 ft^3 (from (e)&(d))

$C_A = 0.545$ Ci/ft^3

The maximum permissible leakage rate for the medium (predominantly air) in the containment during hypothetical accident conditions, L_A, is determined by:

$L_A \leq R_A/C_A$

$L_A \leq$ (5.33 Ci/hr)/(0.545 Ci/ft^3)

$L_A \leq 9.78$ ft^3/hr (hr/3600 sec) (30.48 cm/ft)^3

$L_A \leq 76.9$ cm^3/sec.

A reference air leakage rate for hypothetical accident conditions of transport, L_{RA}, at standard conditions can be calculated based on the following:

Maximum cask internal temperature	193°F(1)	(Section 3.5.3)
Minimum cask internal temperature	-40°F	(Section 3.4.3)
Maximum cask internal pressure	1.55 atm abs	(Section 4.3.2.1)

(1) Assumes dewatered resin waste form temperature predicted by analysis would be conservative for this case.

Accordingly, the reference air leakage rate is by calculation,

$$L_{RA} = 162 \text{ std cm}^3/\text{sec}$$

The permissable leakage rate above is less restrictive then that calculated for dispersable, unsolidified contents during normal conditions of transport. However, no attempt is made here to characterize the particle size of the contents following accident conditions. It can be conservatively assumed that, with complete disintegration of the solidified monolith, the contents (at least in part) could be envisioned as equivalent to the dispersible, unsolidified contents described in Section 4.2.1.1. The release of these solids is similarly precluded in the hypothetical accident condition by the cask containment seal. Hittman will utilize the leak test method described in Section 8.2.2 to demonstrate (conservatively) that the applicable containment requirements are met.

4.4 Appendix

Not Applicable.

References

4-1 Shappert, L.B., Cask Designers Guide, ORNL-NSIC-68, Februrary 1970.

4-2 MacKenzie, D.R., et.al., Permissible Radionuclide Loading for Organic Ion Exchange Resins from Nuclear Power Plants, NUREG/CR-2830, October 1983.

4-3 American National Standard for Leakage Tests on Packages for Shipment of Radioactive Material, ANSI N14.5-1985 (Draft), March 1, 1985.

4 Parker O-Ring Handbook, ORD 5700, March 1982.

5.0 SHIELDING EVALUATION

5.1 Discussion and Results

The design shielding thickness for the 3-82B steel-lead-steel cask was based on parametric data obtained from a number of different calculations. These calculations embodied varying waste specific activities and gamma energies. The material thickness established was based on the amount required to reduce the dose to 10 mr/hr at a point six feet from the cask surface.

Figures 5-1 through 5-3 show the maximum specific activity for the various package configurations as a function of the percentage of Co-60 in the container. Table 5-1 presents the maximum allowable curie content per shipment for inclusion as part of the license. These maximums are based on the presence of five percent CO-60 in the mixture.

5.2 Source Specification

5.2.1 Gamma Source

The gamma energies were estimated by assuming a waste mixture composed of varying percentages of CO-58 and Co-60. The gammas emitted are:

Isotope	Fractional Abundance	Energy (Mev)
Co-58	0.99	0.810
	0.006	1.67
Co-60	1.00	1.17
	1.00	1.33

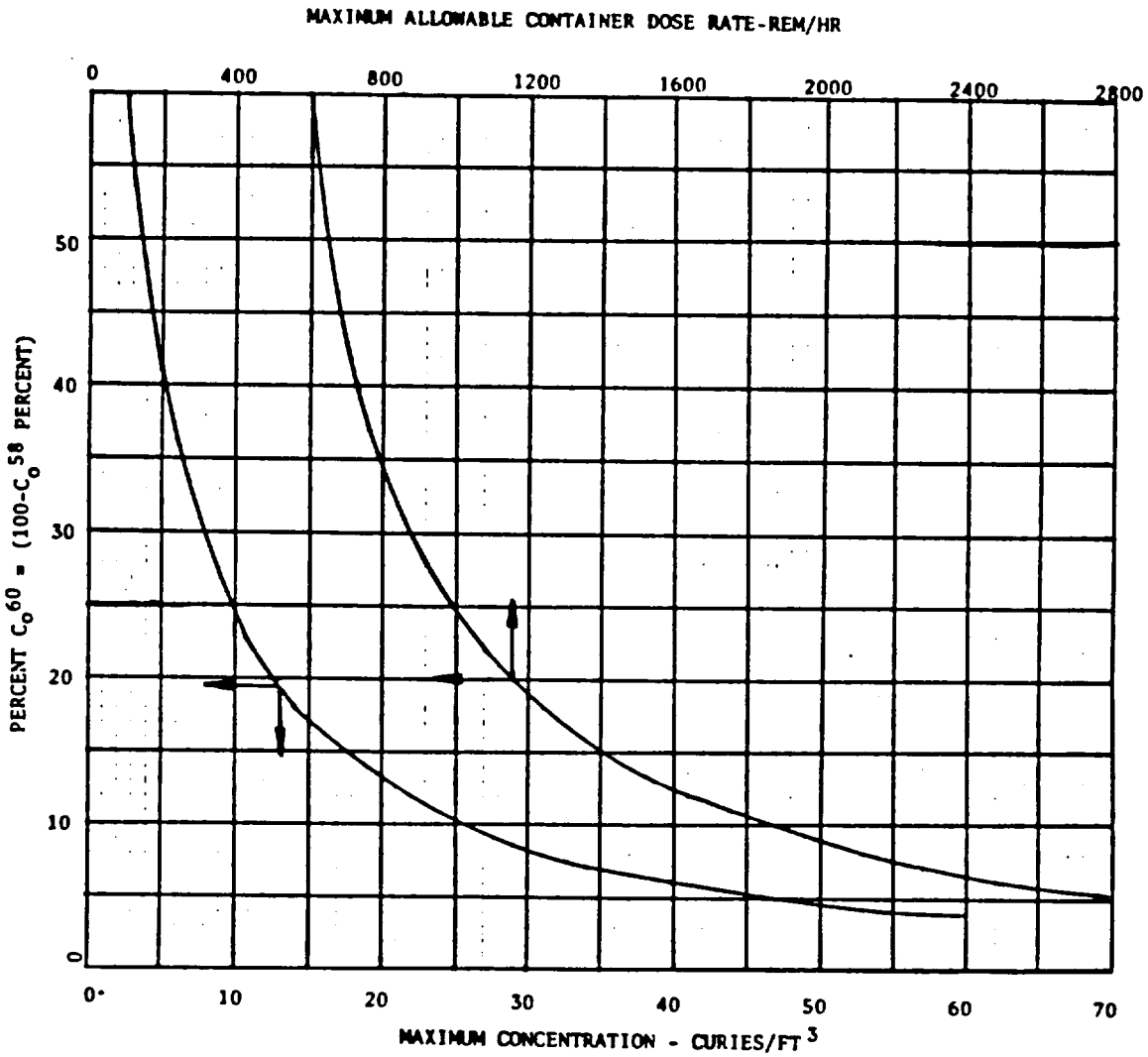

Figure 5-1. Surface Dose Rate and Maximum Container Activity for 3-82B/LC Package (Large Container)

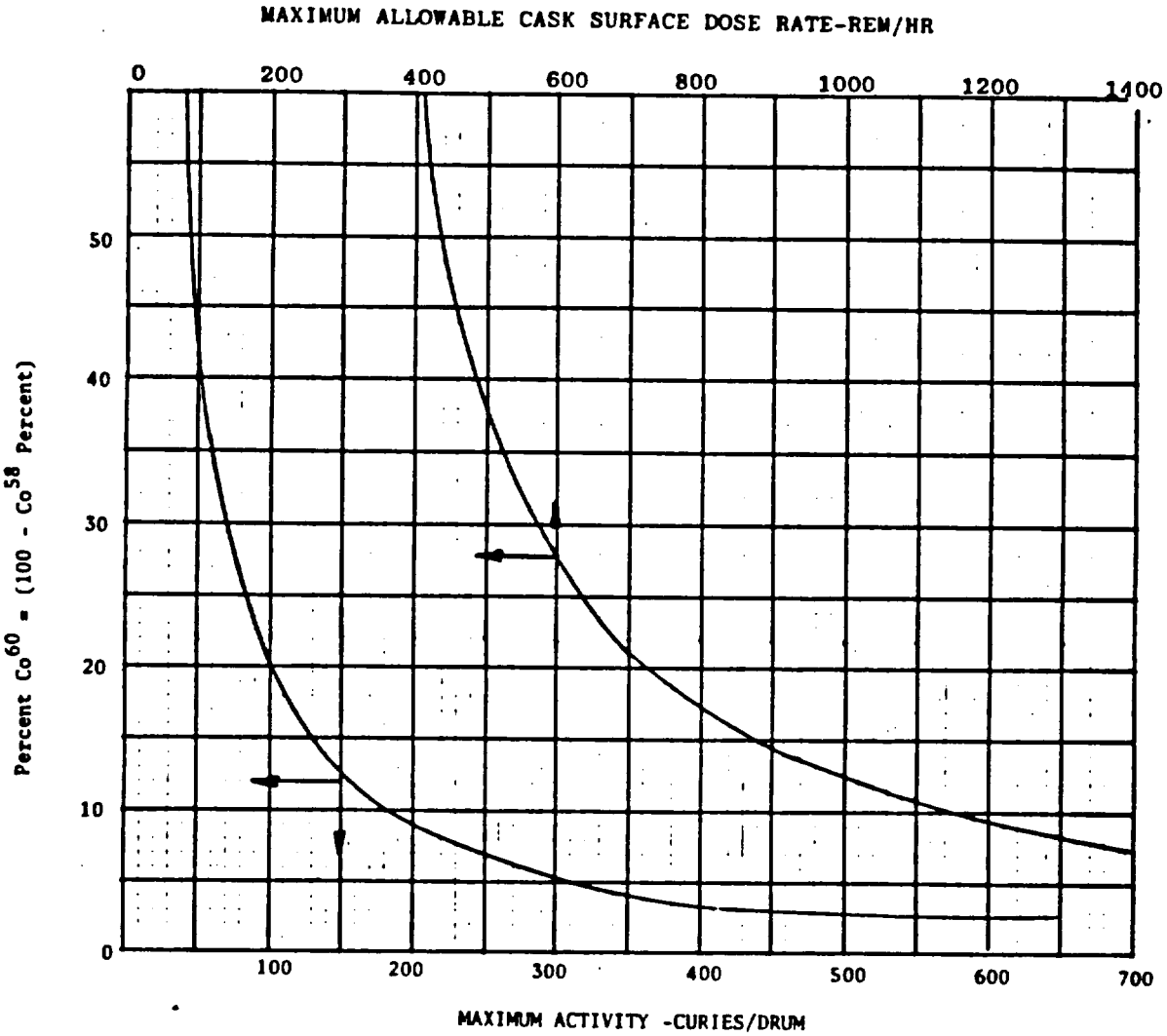

Figure 5.2. Surface Dose Rate and Maximum Drum Activity for 3-82B /55 Package (3-55 gallon drums)

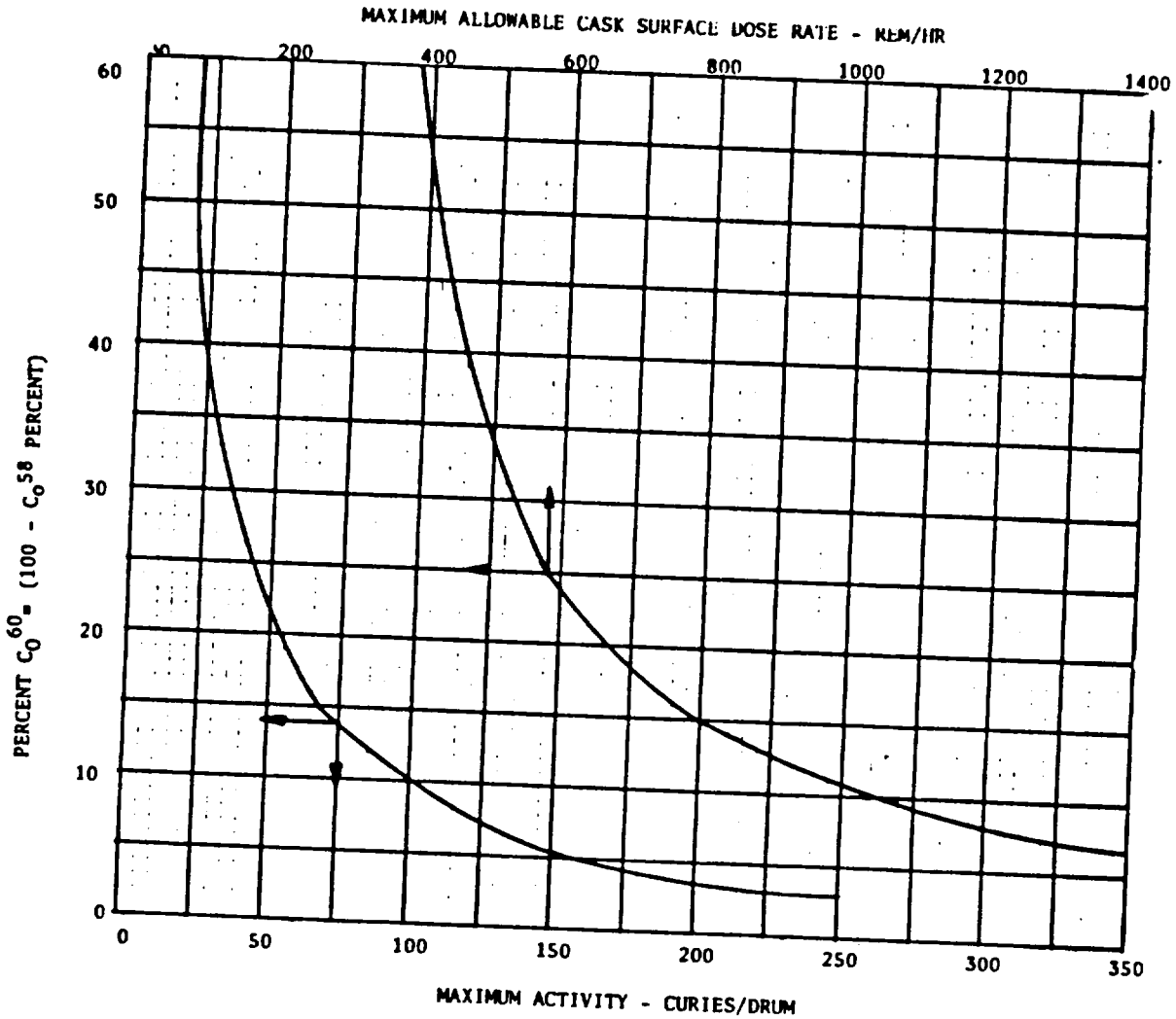

Figure 5.3. Surface Dose Rate and Maximum Drum Activity for 3-82B/30 Package (8-30 gallon drums)

TABLE 5-1. SHIPMENT CURIE CONTENT

Configuration	Max. Ci per Shipment
Large containers	3500
30 gallon drums	1300
55 gallon drums	900

Figures 5-1 through 5-3 also show allowable container surface dose as a function of mixture content. These criteria will be used for procedural controls.

The means of converting total curies/ft^3 in the cask to a volumetric source strength for each discrete gamma energy was accomplished as follows:

(1) Calculate total number of curies in container

(2) Ratio the number of curies of Co-58 and Co-60 according to the assumed percentage mix

(3) Calculate the number of particles emitted
(1 curie = 3.7×10^{10} d/sec; 1 ft^3 = 28,317 cm^3)

5.2.2 Neutron Source

Materials being transported in the 3-82B are not neutron sources, therefore this section does not apply.

5.3 Model Specification

5.3.1 Description of the Radial and Axial Shielding Configuration

The shielding dose model is shown in Figure 5-4. This figure also illustrates the shielding materials.

5.3.2 Shielding Regional Densities

Steel = 7.80 gm/cm^3
Lead = 11.35 gm/cm^3

5.4 Shielding Evaluation

The equations used to calculate the dose were based on the methods described in References 5-1 and 5-2. The dose from the cask in a radial direction was calculated by replacing the cylindrical source by a line source and including the effect of self-absorption in the cylinder. The axial dose from the cask was calculated replacing the cylindrical source by a disc source.

The formulas used to calculate the flux were:

$$\Phi(E_o) = \frac{BS_V(E_o)R_o{}^2}{2(a + Z)} \cdot F(\theta, b_2) \qquad \text{(Radial)}$$

$$\Phi(E_o) = \frac{BS_V(E_o)}{2\mu c} \quad E_2(b_1) - \frac{E_2(b_1 \sec\theta)}{\sec} \qquad \text{(Axial)}$$

where:

$\Phi(E_o)$ = collided particle flux measured at energy E, no./cm^2-sec

E_o = gamma energy (MEV)

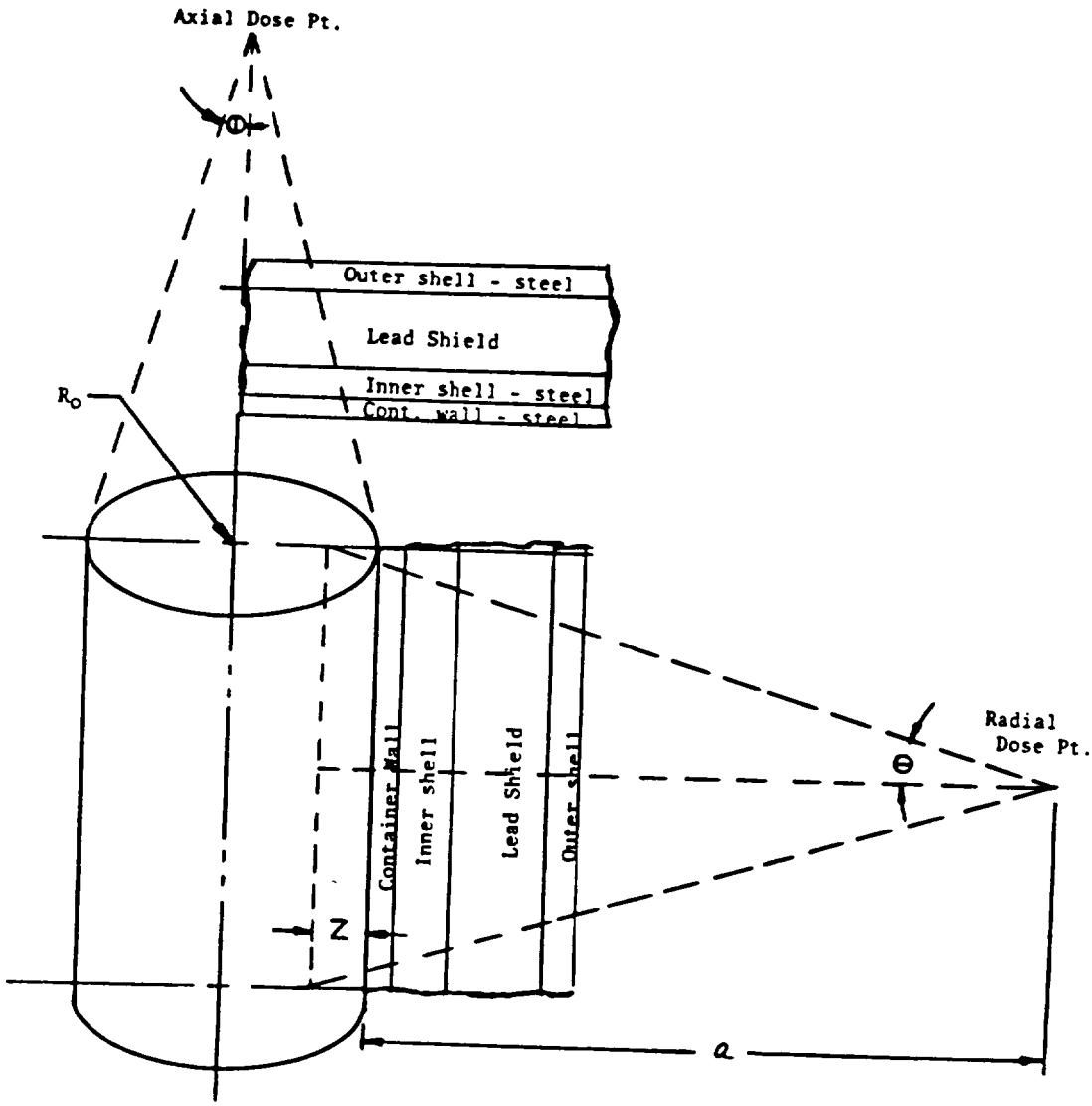

Figure 5.4 Shielding Dose Model

B = buildup factor

$S_V(E_o)$ = volumetric source strength measured at E, no./cm^3

R_o = inner radius of cylinder, cm

μ_c = linear attenuation coefficient for gamma of energy E_o for source of material (waste), cm^{-1}

$$b_1 = \sum_{i=1}^{n} \mu_m t_m$$

$$b_2 = b_1 + \mu_c Z$$

μ_m = linear attenuation coefficient of a gamma ray of E_o for the m'th shield material, cm^{-1}

t_m = thickness of material "m", cm

*$F(\theta,b_2)$ = Sieverts integral = $\int_0^{\theta} e^{-b_2 \sec\theta} d\theta$

*$E_2(b_1)$ = $\int_{b_1}^{\infty} b_1 \frac{e^{-t}}{t^2} dt$

The geometric configuration is shown in Figure 5-4. This figure also illustrates the shielding materials.

The dose rate (in millirem/hr) is determined from the flux by the following equation:

$$D(a,E_o) = 5.767 \times 10^{-2} (\mu a/\rho) E_o \Phi(E_o) B \text{ where:}$$

$D(a,E_o)$ = dose rate at distance a from uncollided gamma of initial energy E, including buildup contribution, mr/hr

$(\mu a/\rho)$ = energy absorption mass attenuation coefficient for tissue, cm^2/g

E_o = gamma energy, MEV

*Tabulated integrals found in Reference 5-2.

B = the total buildup factor for the composite shield, weighted according to the number of relaxation lengths of each of the shield materials present

The buildup factor for each different material B is calculated by the Taylor Formula:

$$B_m(E_o,\mu_m T) = A_m c^{-\alpha_m \mu_m T} + 1 - A_m)c^{-\beta_m \mu_m T} \qquad \text{(Ref. 5-2)}$$

where:

$$T = \sum_m t_m$$

This total buildup factor for the composite shield, B, is calculated by weighting the individual material buildup factors with the number of relaxation lengths of each of the materials:

$$B = \sum_m \frac{u_m t_m}{\mu_m T} B_m$$

5.5 Appendix

References

5-1 Shappert, L.B. Cask Designers Guide, ORNL-NSIC-68, February 1970.

5-2 Rockwell, T., Ed., Reactor Shielding Design Manual, D. Van Nostrand Co., Princeton, NJ, 1956.

6.0 CRITICALITY EVALUATION

The nature of the waste being handled in the 3-82B cask, as described in Section 1, is not fissionable. Therefore, this section is not applicable.

7.0 OPERATING PROCEDURES

Customers that use the 3-82B cask are supplied a copy of the SEG Rad Services Manual. This manual describes the services that will be supplied and contains a section on operating procedures. This procedure describes the inspection of the cask and trailer upon arrival at the site, the loading procedures and the forms that need to be filled out prior to the cask leaving the customer's site.

Section 7.1 and 7.2 outline the general requirements set forth in the operating procedure for the 3-82B cask afforded to the user.

Upon receipt of the package, the routine determinations specified in 10CFR71.87 shall be performed.

7.1 Procedures for Loading the Package

1) Loosen the turnbuckles attaching the upper impact skirt to the cask body and remove the pins from the shackles at the impact skirt end of the attachment system.
2) Using suitable rigging, lift and remove the upper impact skirt.
3) Loosen and remove the primary lid nuts.
4) Using suitable rigging, lift and remove the primary cask lid. Care should be taken to ensure that the lid and cask sealing surfaces are not damaged during removal and placement of the primary cask lid.
5) Perform a visual inspection of the cask ensuring that the cask and its components (including nuts, studs, tiedown devices, gaskets, drain

plug) are free from damage or defects and are in proper operating condition.

6) Inspect the interior of the cask to ensure there is no water or loose articles present.

7) Place the disposable liner, steel drum, high integrity container, or other waste container into the cask. If using drums, use dunnage or shoring to secure drums in place inside the cask.

8) Using suitable rigging, lift primary lid and lower into place on the cask using guide pins for proper alignment and ensuring that the primary lid gasket is not damaged.

9) Install and torque the primary lid nuts to 190-210 foot-pounds.

10) If loading waste through the shield plug (steel liner and high integrity container (HIC) only):

    a) Loosen and remove the shield plug nuts.

    b) Using suitable rigging, remove shield plug. Care should be taken to ensure that the lid and cask sealing surfaces are not damaged.

    c) Load waste into liner (or HIC) through the shield plug opening.

    d) Install container closure device.

    e) Place shield plug onto cask.

    f) Install and torque the shield plug nuts to 35-40 foot-pounds.

11) Perform assembly vertification test per Section 8.2.2.1 prior to the shipment of any authorized waste forms not classified as Low Specific Activity material. .

12) Using suitable rigging, reposition the upper impact skirt on the cask.

13) Insert pins through the shackles to attach the skirt to the cask.

14) Tighten impact skirt turnbuckles.

15) Install tamper-proof seal.

16) Perform a radiation survey on the cask and trailer system to ensure that the radiation levels and contamination levels are below the specified limits in 10CFR and 49CFR.

17) Complete the necessary shipping papers, certifications and pre-release checklist.

7.2 Procedures for Unloading the Package

Packages containing greater than Type A quantities of radioactive material shall be received, handled and monitored in accordance with 10CFR20.205.

1) Survey the cask in accordance with the site requirements.

2) Remove the upper impact skirt as in Steps 1 and 2 of Section 7.1.

3) Remove the cask primary lid as in Steps 3 and 4 of Section 7.1.

4) Exercising extreme caution (due to possible exposure), connect slings of the disposable container or pallet to a suitable lifting device and remove from the cask.

7.3 Preparation of an Empty Package for Transport

1) Inspect the interior of the cask to ensure there is no water or loose articles present.

2) Using suitable rigging, lift primary lid and lower into place on the cask using guide pins for proper alignment and ensuring that the primary lid gasket is not damaged.

3) Install and torque the primary lid nuts to 190-210 foot-pounds.

4) Using suitable rigging, reposition the upper impact skirt on the cask.

5) Insert pins through the shackles to attach the skirt to the cask.

6) Tighten impact skirt turnbuckles.

7) Install tamper-proof seal.

8) Perform a radiation survey on the cask and trailer system to ensure that the radiation levels and contamination levels are below the specified limits in 10CFR and 49CFR.

9) Complete the necessary shipping papers, certifications and pre-release checklist.

8.0 ACCEPTANCE TESTS AND MAINTENANCE PROGRAM

8.1 Acceptance Test

The 3-82B transportation cask is currently in service. As of the date of this report, no new 3-82B casks are anticipated to be built. Therefore, the Acceptance Test section is not applicable.

8.2 Maintenance Program

The 3-82B transportation cask is subjected to both routine and periodic maintenance programs as outlined in this section.

8.2.1 Structural and Pressure Tests

The 3-82B cask is inspected prior to each shipment as well as during routine scheduled maintenance at four (4) month intervals for any visual damage, defects or wear to any of the cask structural components which may significantly reduce the effectiveness of the packaging. Any noticable defects shall result in repair or replacement of the affected parts. No pressure tests for structural verification purposes are routinely performed.

8.2.2 Leak Tests

A leak test shall be performed on the 3-82B cask on an annual basis to demonstrate satisfaction of the containment requirements identified in Sections 4.2.1 and 4.3.2. An assembly verification test shall be performed per Section 8.2.2.1 prior to the shipment of any authorized waste forms not classified as Low Specific Activity material.

The following test methods shall be used to verify that the containment leakage rate is less than the most stringent maximum permissable leakage rate.

8.2.2.1 Glycol Solution or Water Bubble Test Requirements

a) Nominal internal cask pressure for test = 4 psig

b) All gasketed joints and other cask components at the cask containment boundary affected by use of the cask. (For annual test, all non-permanent containment boundary components shall be tested).

c) All test joints shall be fully wetted and inspected for any air bubbles.

d) If any air bubbles are evidenced, reassembly or repairs to the leaking joint are required.

8.2.3 Subsystems Maintenance

The 3-82B transportation package does not contain any subsystems therefore, this section is not applicable.

8.2.4 Valve, Rupture Disks, and Gaskets on Containment Vessel

The primary lid and secondary lid gaskets are subjected to visual inspection prior to each shipment as well as during routine scheduled maintenance at four (4) month intervals. Any noticeable damage, defect, or wear will result in gasket replacement. In addition, the seal made by the gaskets is verified by the leak tests described in 8.2.2.

8.2.5 Shielding

In the event that the 3-82B cask undergoes repair for damage which may significantly reduce the shielding capabilities of the package, the package would undergo a gamma scan which will effectively survey the entire cask surface using a grid reading system in accordance with a prepared SEG procedure.

8.2.6 Thermal

In the event that the package undergoes a thermal accident (fire) which may reduce package effectiveness, the cask would be subjected to thermal testing in accordance with a prepared SEG procedure.

THIS PAGE IS AN OVERSIZED DRAWING OR FIGURE,

THAT CAN BE VIEWED AT THE RECORD TITLED: DWG. NO. STD-02-076, REV. 7 SHEET 1 OF 3 "3-82 B CASK CERTIFICATION DWG. WITHIN THIS PACKAGE...OR, BY SEARCHING USING THE DRAWING NUMBER: STD-02-076, REV. 7

NOTE: Because of this page's large file size, it may be more convenient to copy the file to a local drive and use the Imaging (Wang) viewer, which can be accessed from the Programs/Accessories menu.

THIS PAGE IS AN OVERSIZED DRAWING OR FIGURE,

THAT CAN BE VIEWED AT THE RECORD TITLED: DWG. NO. STD-02-076, REV. 7 SHEET 2 OF 3 "3-82 B CASK CERTIFICATION DWG. WITHIN THIS PACKAGE...OR, BY SEARCHING USING THE DRAWING NUMBER: STD-02-076, REV. 7

NOTE: Because of this page's large file size, it may be more convenient to copy the file to a local drive and use the Imaging (Wang) viewer, which can be accessed from the Programs/Accessories menu.

THIS PAGE IS AN OVERSIZED DRAWING OR FIGURE,

THAT CAN BE VIEWED AT THE RECORD TITLED: DWG. NO. STD-02-076, REV. 7 SHEET 3 OF 3 "3-82 B CASK CERTIFICATION DWG. WITHIN THIS PACKAGE...OR, BY SEARCHING USING THE DRAWING NUMBER: STD-02-076, REV. 7

NOTE: Because of this page's large file size, it may be more convenient to copy the file to a local drive and use the Imaging (Wang) viewer, which can be accessed from the Programs/Accessories menu.