Exelon Generation Company, LLC
Quad Cities Nuclear Power Station
22710 206th Avenue North
Cordova, IL 61242-9740

www.exeloncorp.com

Exelon Nuclear

SVP-03-008

January 17, 2003

U. S. Nuclear Regulatory Commission
ATTN: Document Control Desk
Washington, DC 20555-0001

Quad Cities Nuclear Power Station, Units 1 and 2
Facility Operating License No. DPR-29 and DPR 30
NRC Docket No. 50-254 and 50-265

Subject: Quad Cities Nuclear Power Station, Units 1 and 2, Fourth Interval Inservice Inspection Program Plan

In accordance with 10 CFR 50.55a(g)(4)(ii), Exelon Generation Company, LLC (EGC) has updated the Quad Cities Nuclear Power Station (QCNPS), Units 1 and 2 Inservice Inspection (ISI) Program for the Fourth Ten Year Interval.

In accordance with 10 CFR 50.55a(g), EGC is required to update the ISI program per the American Society of Mechanical Engineers (ASME) Section XI (the Code) for QCNPS once every 120-month inspection interval. The ISI program is required to comply with the latest edition and addenda of the Code incorporated by reference in 10 CFR 50.55a 12 months prior to the start of the interval per 10 CFR 50.55a(g)(4)(ii). The next interval for QCNPS Units 1 and 2 is currently scheduled to commence on March 10, 2003, and be completed by March 9, 2013, as allowed by paragraph IWA-2430 (d) of the Code. Accordingly, the 1995 Edition with 1996 Addenda of ASME Section XI is the Code that QCNPS must meet for the fourth ten-year interval ISI program.

EGC is submitting for review the Fourth Interval ISI Program Plan (Attachment A). The key features of the QCNPS ISI Program Plan are the Introduction and Background (Section 1), Basis for ISI Program (Section 2), Component ISI Program Plan (Section 3), Component Support ISI Program Plan (Section 4), System Pressure Testing ISI Program Plan (Section 5), ISI Summary Tables (Section 7), Relief Requests (Section 8), and References (Section 10).

Portions of the Fourth Interval ISI Program Plan have been intentionally omitted from this submittal. These portions are Section 6 (Containment ISI Plan) and Section 9 (Containment ISI Relief Requests). Sections 6 and 9 pertain exclusively to containment ISI with the next ten-year interval update scheduled for September 9, 2008.

A047

In accordance with EGC's ISI administrative procedures, additional information will be submitted regarding the Fourth Interval ISI Program Plan. Specifically, the ISI Program Classification Boundary Drawings and the Fourth Interval Schedule Summary Report. Both are currently in the revision process and will be forwarded upon issuance of the documents.

Where alternatives to Code requirements are being proposed, or the implementation of certain Code requirements has been determined to be impractical because of configuration issues, radiation level, or other valid reasons, specific relief requests have been included in Section 8 of the Fourth Interval ISI Program Plan. The relief requests deal with the implementation of certain ISI program requirements, which affect the population, scheduled for the February 2004 Unit 2 refueling outage and the Unit 1 January 2005 refueling outage. Approval of these relief requests is requested by January 23, 2004. This schedule will support the Unit 2 refueling outage, currently scheduled to start on February 24, 2004.

Several relief requests presented in the QCNPS ISI program update are similar to those previously approved under the Third Ten Year Inspection Interval ISI program. A cross-reference along with references to NRC approval dates is presented in Attachment B.

If you have any questions or require additional information, please contact Mr. Wally Beck at (309) 227-2800.

Respectfully,

Timothy J. Tulon
Site Vice President
Quad Cities Nuclear Power Station

Attachment A: Inservice Inspection Program Plan
Attachment B: Relief Request Cross-Reference

cc: Regional Administrator – NRC Region III (w/attachments)
NRC Senior Resident Inspector – Quad Cities Nuclear Power Station (w/o attachments)

Attachment A

Inservice Inspection Program Plan

QUAD CITIES NUCLEAR POWER STATION
UNITS 1 & 2

ISI PROGRAM PLAN
FOURTH TEN-YEAR INSPECTION INTERVAL

Commercial Service Dates:

Unit 1 – 2/18/73
Unit 2 – 3/10/73

Quad Cities Nuclear Power Station
22710 206th Avenue North
Cordova, Illinois 61242

Exelon Generation Company, LLC (EGC)
200 Exelon Way
Kennett Square, PA 19348

Prepared By:
ITS Corporation
Naperville, Illinois

1.0 INTRODUCTION AND BACKGROUND

1.1 Introduction

This Inservice Inspection (ISI) Program Plan details the requirements for the examination and testing of ISI Class 1, 2, and 3 pressure retaining components and supports at Quad Cities Nuclear Power Station (QCNPS), Units 1, 2, and 1/2. Common (Unit 1/2) components are included in the Unit 1 sections, reports, and tables. This ISI Program Plan also includes Risk-Informed Inservice Inspections (RISI), augmented inservice inspections, and pressure testing requirements imposed on or committed to by QCNPS. Procedure ER-AA-330, "Conduct of Inservice Inspection Activities," implements the ASME Section XI ISI Program.

The Fourth Inservice Inspection Interval is effective from March 10, 2003, through March 9, 2013, for QCNPS Unit 1 and March 10, 2003, through March 9, 2013, for QCNPS Unit 2. These effective interval dates are based on the assumption that QCNPS will be approved to extend plant operation under the license renewal application. Paragraph IWA-2430(d)(1) of ASME Section XI allows an inspection interval to be extended or decreased by as much as one year, and Paragraph IWA-2430(e) allows an inspection interval to be extended when a unit is out of service continuously for six months or more. The extension may be taken for a period of time not to exceed the duration of the outage. See Table 1.1-1 at the end of this section for extensions that apply to QCNPS's Fourth Interval.

The Fourth Inservice Inspection Interval is divided into three successive inspection periods as determined by calendar years of plant service within the inspection interval. Table 1.1-1 identifies the period dates for the Fourth Inservice Inspection Interval as defined by Inspection Program B. In accordance with Paragraph IWA-2430(d)(3), the inspection periods specified in Table 1.1-1 may be decreased or extended by as much as 1 year to enable inspection to coincide with QCNPS's refueling outages.

1.2 Background

The Commonwealth Edison Company, now known commercially as Exelon Generation Company (Exelon), obtained construction permits to build QCNPS on February 15, 1967, for Unit 1, CPPR-23, and for Unit 2, CPPR-24. The docket numbers assigned to QCNPS are 50-254 for Unit 1 and 50-265 for Unit 2. After satisfactory plant construction and preoperational testing was completed, Exelon was granted a full power operating license for Unit 1, DPR-29, and subsequently commenced commercial operation on February 18, 1973; the full power operating license for Unit 2, DPR-30, was granted and commercial operation commenced on March 10, 1973.

QCNPS's piping systems and associated components were designed and fabricated before the examination requirements of American Society of Mechanical Engineers

(ASME) Boiler and Pressure Vessel Code, Section XI were formalized and published. Since this plant was not specifically designed to meet the requirements of ASME Section XI, literal compliance is not feasible or practical within the limits of the current plant design. Limitations are likely to occur due to conditions such as accessibility, geometric configuration, and/or metallurgical characteristics. For some inspection categories, an alternate component may be selected for examination and the code statistical and distribution requirements can still be maintained. If Code required examination selection criteria cannot be met, a relief request will be submitted in accordance with 10 CFR 50.55a.

1.3 Third Interval ISI Program

Pursuant to the Code Of Federal Regulations, Title 10, Part 50, Section 55a, *Codes and standards*, (10 CFR 50.55a), Paragraph (g), *Inservice inspection requirements*, licensees were required to update their ISI programs to meet the requirements of ASME Section XI once every ten years or inspection interval. The ISI program was required to comply with the latest edition and addenda of the Code incorporated by reference in 10 CFR 50.55a 12 months prior to the start of the interval per 10 CFR 50.55a(g)(4)(ii). Accordingly, the Inservice Inspection requirements applicable to the Third Inservice Inspection Program should have been based on the rules set forth in the 1986 Edition of ASME Section XI.

However, ComEd by letter dated June 3, 1992, and as supplemented on December 3, 1992, requested United States Nuclear Regulatory Commission (NRC) approval to meet the requirements set forth in the 1989 Edition, No Addenda of ASME Section XI prior to its incorporation by reference into 10 CFR 50.55a(b)(2). NRC approval was received under the letter from J. E. Dyer to D. L. Farrar dated April, 19 1993, "Inservice Inspection Program Update – Quad Cities, Units 1 and 2." Therefore, the 1989 Edition, No Addenda of ASME Section XI is the Code that QCNPS Units 1 and 2 met for the Third Ten Year Inservice Inspection Interval. The ISI Program Plan addressed Subsections IWA, IWB, IWC, IWD, and IWF of ASME Section XI, and utilized Inspection Program B.

Subsection IWE was added to the ISI Program midway through the Third Interval to address Containment Inservice Inspections (CISI). These requirements were mandated by the Federal Register in 1996 and marked the beginning of the First Interval for CISI inspections. Implementation of the CISI Program is discussed in Section 6.0.

QCNPS adopted the EPRI Topical Report TR-112657, Rev. B-A methodology, which was supplemented by Code Case N-578-1, for implementing risk-informed inservice inspections. The RISI program was in effect from the middle of the Third Period through the end of the Third Interval. This approach replaced the categorization, selection, and examination volume requirements of ASME Section XI Categories B-F, B-J, C-F-1, and C-F-2 applicable to QCNPS with Category R-A as defined in Code Case N-578-1.

QCNPS Unit 1 was shut down from December 19, 1997, to May 31, 1998 for an Appendix R outage. QCNPS Unit 1 received approval for schedular exemption in a letter from Carl F. Lyon to John L. Skolds dated September 16, 2002, for several Category B-D, Item Number B3.90 & B3.100 components. These inspections will be repeated during the Fourth Interval in accordance with the Fourth Interval ISI Program.

1.4 Fourth Interval ISI Program

Per 10 CFR 50.55a(g), licensees are required to update their ISI programs to meet the requirements of ASME Section XI once every ten years or inspection interval. The ISI program is required to comply with the latest edition and addenda of the Code incorporated by reference in 10 CFR 50.55a twelve (12) months prior to the start of the interval per 10 CFR 50.55a(g)(4)(ii).

The QCNPS Fourth Interval ISI Program Plan was developed in accordance with the requirements of 10 CFR 50.55a, and the 1995 Edition with the 1996 Addenda of ASME Section XI. This ISI Program Plan addresses Subsections IWA, IWB, IWC, IWD, and IWF of ASME Section XI, and utilizes Inspection Program B as defined therein. Implementation of Subsection IWE is discussed in Section 6.0.

QCNPS has adopted the EPRI Topical Report TR-112657, Rev. B-A methodology, which was supplemented by Code Case N-578-1, for implementing risk-informed inservice inspections. The RISI program will be in effect for the entire Fourth Inspection Interval. This approach replaces the categorization, selection, and examination volume requirements of ASME Section XI Categories B-F, B-J, C-F-1, and C-F-2 applicable to QCNPS with Category R-A as defined in Code Case N-578-1. Implementation of RISI program is in accordance with relief request I4R-02.

1.5 Code Cases

Per Footnote 6 of 10 CFR 50.55a, ASME Code Cases that have been determined to be suitable for use in ISI Program Plans by the NRC are listed in Regulatory Guide 1.147, "Inservice Inspection Code Case Acceptability-ASME Section XI, Division 1." The approved Code Cases in Regulatory Guide 1.147 being utilized by QCNPS are included in Section 2.1.1 of this document. The latest version of Regulatory Guide 1.147 incorporated into this document is Revision 13. As this guide is revised, newly approved Code Cases will be assessed for plan implementation at QCNPS.

Footnote 6 also states that the use of other Code Cases (than those listed in Regulatory Guide 1.147) may be authorized by the Director of the office of Nuclear Reactor Regulation upon request pursuant to 10 CFR 50.55a(a)(3). Code Cases not approved for use in Regulatory Guide 1.147, which are being utilized by QCNPS through associated relief requests that are included in Section 8.0.

This ISI Program Plan will utilize the Draft Regulatory Guide DG-1091 (Proposed Revision 13 of Regulatory Guide 1.147) with the anticipation that the Final Revision 13 of Regulatory Guide 1.147 will be approved prior to the start of the Fourth Inspection Interval. QCNPS will review the Final Revision 13 of Regulatory Guide 1.147 for ISI program impact at which time it is published.

1.6 Relief Requests

In accordance with 10 CFR 50.55a, when a licensee either proposes alternatives to ASME Section XI requirements which provide an acceptable level of quality and safety, determines compliance with ASME Section XI requirements would result in hardship or unusual difficulty without a compensating increase in the level of quality and safety, or determines that specific ASME Section XI requirements for inservice inspection are impractical, the licensee shall notify the NRC and submit information to support the determination.

The submittal of this information will be referred to in this document as a "relief request." Relief requests for the Fourth Interval are included in Section 8.0 of this document. The text of the relief requests contained in Section 8.0 will demonstrate that one of the following: the proposed alternatives provide an acceptable level of quality and safety per 10 CFR 50.55a(a)(3)(i), compliance with the specified requirements would result in hardship or unusual difficulty without a compensating increase in the level of quality and safety per 10 CFR 50.55a(a)(3)(ii), or the code requirements are considered impractical per 10 CFR 50.55a(g)(5)(iii).

Per 10 CFR 50.55a Paragraphs (a)(3) and (g)(6)(i), the Director of the Office of Nuclear Reactor Regulation will evaluate relief requests and "may grant such relief and may impose such alternative requirements as it determines is authorized by law and will not endanger life or property or the common defense and security and is otherwise in the public interest giving due consideration to the burden upon the licensee that could result if the requirements were imposed on the facility."

Table 1.1-1

QCNPS Unit 1 and Unit 2 ISI Interval/Period/Outage Matrix

Unit 1		Period	Interval	Period	Unit 2	
Outage Number	**Projected Outage Start Date or Outage Duration**	**Start Date to End Date**	**Start Date to End Date**	**Start Date to End Date**	**Projected Outage Start Date or Outage Duration**	**Outage Number**
Q1R18	Scheduled 1/05	1st 3/10/03 to 3/9/06	4th (Unit 1) 3/10/03 to 3/9/13[1] 4th (Unit 2) 3/10/03[2] to 3/9/13	1st 3/10/03 to 3/9/06	Scheduled 2/04	Q2R17
Q1R19	Scheduled 2/07	2nd 3/10/06 to 3/9/10			Scheduled 1/06	Q2R18
Q1R20	Scheduled 2/09			2nd 3/10/06 to 3/9/10	Scheduled 3/08	Q2R19
Q1R21	Scheduled 2/11	3rd 3/10/10 to 3/9/13		3rd 3/10/10 to 3/9/13	Scheduled 3/10	Q2R20
Q1R22	Scheduled 2/13				Scheduled 3/12	Q2R21

Note 1: The Unit 1 Third Inspection Interval was extended by 20 days as permitted by IWA-2430(d). This extension is being carried forward to the Fourth Interval to accommodate both Units 1 and 2 having the same interval start date. As required by IWA-2430(d)(1), successive intervals shall not be altered by more than one year from the original pattern. This means that for the remainder of the Fourth Interval, only 345 days are available to use under the IWA-2430(d) extension.

Note 2: The Unit 2 Third Inspection Interval was extended by 365 days as permitted by IWA-2430(d). This extension does not affect the start and end dates of the Fourth Interval.

2.0 BASIS FOR INSERVICE INSPECTION PROGRAM

2.1 ASME Section XI Examination Requirements

As required by the 10 CFR 50.55a, this program was developed in accordance with the requirements detailed in the 1995 Edition, 1996 Addenda, of the ASME Boiler and Pressure Vessel Code, Section XI, Division 1, Subsections IWA, IWB, IWC, IWD, IWF, Mandatory Appendices, Inspection Program B of IWA-2432, and approved alternatives through relief requests and safety evaluation reports (SERs).

The ISI program implements Appendix VIII "Performance Demonstration for Ultrasonic Examination Systems," ASME Section XI 1995 Edition with the 1996 Addenda as required by 10 CFR 50.55a(g)(6)(ii)(C). Appendix VIII requires qualification of the procedures, personnel, and equipment used to detect and size flaws in piping, bolting, and the reactor pressure vessel. Each organization (e.g., owner or vendor) will be required to have a written program to insure compliance with the requirements. These requirements are implemented through the Performance Demonstration Initiative (PDI) Program according to the schedule defined in 10 CFR 50.55a(g)(6)(ii)(C).

For the Fourth Inspection Interval, QCNPS's inspection program for ASME Section XI Categories B-F, B-J, C-F-1, and C-F-2 will be governed by risk-informed requirements. The RISI program methodology is described in the EPRI Topical Report TR-112657, Rev. B-A. To supplement the EPRI Topical Report, Code Case N-578-1 (as applicable per Relief Request I4R-02) is also being used for the classification of piping structural elements under the RISI program. The RISI program scope will be implemented as an alternative to the 1995 Edition with the 1996 Addenda, ASME Section XI examination program for Class 1 B-F and B-J welds and Class 2 C-F-1 and C-F-2 welds in accordance with 10 CFR 50.55a(a)(3)(i). The basis for the resulting risk categorizations of the non-exempt Class 1 and 2 piping systems at QCNPS is defined and maintained in the Final Report, "Risk Informed Inservice Inspection Evaluation," as referenced in Section 10.0 of this document.

The CISI Program Plan per Subsection IWE has been incorporated into Section 6.0 of this ISI Program Plan and is not discussed in this section.

2.1.1 ASME Section XI Code Cases

As referenced by 10 CFR 50.55a Footnote 6 and allowed by NRC Regulatory Guide 1.147, Revision 13, the following Code Cases are being incorporated into the QCNPS ISI Program:

N-307-2 Revised Ultrasonic Examination Volume for Class 1 Bolting, Table IWB-2500-1, Examination Category B-G-1,

When the Examinations Are Conducted From the End of the Bolt or Stud or From the Center-Drilled Hole

N-416-2 Alternative Pressure Test Requirements for Welded Repairs, Fabrication Welds for Replacement Parts and Piping Subassemblies, or Installation of Replacement Items by Welding, Class 1, 2, and 3.

Code Case N-416-2 is acceptable subject to the following conditions specified in Regulatory Guide 1.147, Revision 13.

(1) Additional surface examinations should be performed on the root (pass) layer of butt and socket welds of the pressure retaining boundary of Class 3 components when the surface examination method is used in accordance with Section III.
(2) A 4-hour hold time must be maintained prior to the VT-2 visual examination.

(See Technical Approach and Position number I4T-03).

N-458-1 Magnetic Particle Examination of Coated Materials

N-460 Alternative Examination Coverage for Class 1 and Class 2 Welds

N-498-1 Alternative Rules for 10-Year Hydrostatic Pressure Testing for Class 1, 2, and 3 Systems

Code Case N-498-1 is only being implemented as it pertains to Class 3 systems. (The portions of the Case that address Class 1 and 2 systems have been incorporated into the ASME Section XI code of record, 1995 Edition with 1996 Addenda, applicable to the QCNPS Fourth Interval.)

N-504-2 Alternative Rules for Repair of Class 1, 2, and 3 Austenitic Stainless Steel Piping

N-516-2 Underwater Welding

Code Case N-516-2 is acceptable subject to the following conditions specified in Regulatory Guide 1.147, Revision 13.

When welding is to be performed on high neutron fluence Class 1 material, then a mock-up, using material with similar fluence levels, should be welded to verify that adequate crack prevention measures were used.

N-523-2 Mechanical Clamping Devices for Class 2 and 3 Piping

N-526 Alternative Requirements for Successive Inspections of Class 1 and 2 Vessels

N-532 Alternative Requirements to Repair and Replacement Documentation Requirements and Inservice Summary Report Preparation and Submission as Required by IWA-4000 and IWA-6000

Code Case N-532 is acceptable subject to the following conditions specified in Regulatory Guide 1.147, Revision 13.

An Owner's Activity Report Form OAR-1 is required to be prepared and certified upon completion of each refueling outage. The Code Case does not designate a time frame for submission to the regulatory authority. Thus, the OAR-1 must be submitted within 90 days.

Applicable IWA-4000 and IWA-6000 references from the 1995 Edition, with the 1996 Addenda of ASME Section XI, will be utilized in place of the code references specified in Code Case N-532. A matrix of those reference paragraphs was added in Code Case N-532-1 for various Code years.

N-546 Alternative Requirements for Qualification of VT-2 Examination Personnel

Code Case N-546 is acceptable subject to the following conditions specified in Regulatory Guide 1.147, Revision 13.

(1) Qualify examination personnel by test to demonstrate knowledge of Section XI and plant specific procedures for VT-2 visual examination.
(2) Requalify examination personnel by examination every three years.
(3) This Code Case is applicable only to the performance of VT-2 examinations

N-573	Transfer of Procedure Qualification Records Between Owners
N-588	Alternative to Reference Flaw Orientation of Appendix G for Circumferential Welds in Reactor Vessels
N-598	Alternative Requirements to Required Percentages of Examinations
N-623	Deferral of Inspections of Shell-to-Flange and Head-to-Flange Welds of a Reactor Vessel
N-624	Successive Inspections
N-640	Alternative Reference Fracture Toughness for Development of P-T Limit Curves

Additional Code Cases may be invoked in the future based on new Plan requirements or revisions to Regulatory Guide 1.147. Any Code Cases invoked in the future shall be in accordance with those approved for use in the latest published revision of Regulatory Guide 1.147 at that time.

2.2 Augmented Examination Requirements

Augmented examination requirements are those examinations that are performed above and beyond the requirements of ASME Section XI. Below is a summary of those examinations performed by QCNPS that are not specifically addressed by ASME Section XI, or the examinations that will be performed in addition to the requirements of the Code on a routine basis during the Fourth Inspection Interval.

2.2.1 Generic Letter 88-01, "NRC Position on IGSCC in BWR Austenitic Stainless Steel Piping," Revision 2 / Supplement 1 to Generic Letter 88-01, NUREG 0313, "Technical Report on Material Selection and Process Guidelines for BWR Coolant Pressure Boundary Piping," Revision 2, and EPRI Report TR-113932 "BWR Vessel and Internals Project Technical Basis for Revisions to Generic Letter 88-01 Inspection Schedules (BWRVIP-75)," as conditionally approved by NRC final SER dated May 14, 2002.

These documents discuss the examination requirements for Intergranular Stress Corrosion Cracking (IGSCC) in BWR Austenitic Stainless Steel Piping. References to Generic Letter 88-01 (GL 88-01) within the ISI program refer to the comprehensive commitments to all of these documents. The final SER of BWRVIP-75 revised the GL 88-01 inspection schedules. The BWRVIP-75 revised inspection schedules were based on consideration of inspection results and service experience gained

by the industry since issuance of GL 88-01, and includes additional knowledge regarding the benefits of improved BWR water chemistry.

QCNPS has committed to the requirements of these documents as discussed in Updated Final Safety Analysis Report (UFSAR) Section 5.2.3.5. The original QCNPS commitment concerning Generic Letter 88-01 was sent to the NRC in a letter from W. E. Morgan (CECo) to the NRC dated July 29, 1988. The NRC reviewed this commitment in letters from T. M. Ross (NRC) to T. J. Kovach (CECo) dated May 22, 1989 and from L N. Olshan (NRC) to T. J. Kovach (CECo) August 21, 1990.

The outboard RWCU piping has been excluded from Generic Letter 88-01. The basis for this exclusion is documented in a letter from P. L. Piet (CECo) to the T. E. Murley (NRC) dated August 20, 1993 and in a letter from the NRC from R. M. Pulsifer (NRC) to D. L. Farrar (ComEd) dated September 22, 1994.

RISI regulations are being invoked for QCNPS in this ISI Program Plan. Under these new guidelines, Class 1 and 2 piping structural elements are inspected in accordance with EPRI Topical Report TR-112657, Rev. B-A and Code Case N-578-1. Per this Topical Report and Code Case, welds within the plant that are assigned to IGSCC Categories B through G will continue to meet existing IGSCC schedules, while IGSCC Category A welds will be subsumed into the RISI program.

2.2.2 Alternate BWR Feedwater Nozzle Inspection Requirements, dated October 1995

This document discusses BWR Feedwater Nozzle and Control Rod Drive Return Line Nozzle Cracking. The alternate approach was developed and submitted to the NRC by the Boiling Water Reactor Owners' Group (BWROG). The NRC conditionally accepted these alternate requirements in an SER dated June 5, 1998.

QCNPS initially committed to the requirements of NUREG 0619 as stated in the Third Interval ISI Program Plan. QCNPS revised this commitment to utilize the BWROG alternate inspections in a letter from J. P. Dimmette (ComEd) to the NRC dated October 15, 1998. The NRC sent a letter from R. M. Pulsifer (NRC) to O. D. Kingsley (ComEd) dated April 30, 1999 to confirm the discussions of an April 1, 1999, conference call in that ComEd will use the more recent fatigue curves that address environmental effects as approved by ASME Section XI.

2.2.3 BWR Vessel and Internals Project (BWRVIP)

The BWRVIP is comprised of a series of Inspection & Evaluation Guidelines and documents that discuss reactor vessel internals.

The BWRVIP encompasses pertinent information and requirements presented in General Electric Service Information Letters (SILs) and Rapid Information Communication Services Information Letters (RICSILs).

2.2.4 NRC NUREG 0737, dated November 1980

This document discusses TMI Action Plan Requirements, and includes requirements in Item III.D.1.1 for leak testing and periodic visual examinations of systems outside of primary containment which could contain highly radioactive fluids during a serious transient or accident.

QCNPS has committed to the requirements of this document item as discussed in Technical Specification Section 5.5.2. Commitments made concerning NUREG-0737 are required to be maintained per the QCNPS Operating Licenses.

2.3 System Classifications, and P&ID Boundary Drawings

The ISI Classification Basis Document details those systems that are ISI Class 1, Class 2, or Class 3 that fall within the inservice inspection scope of examinations. Below is a summary of the classification criteria used within the Basis Document.

Each safety related, fluid system containing water, steam, air, oil, etc. included in the QCNPS UFSAR was reviewed to determine which safety functions they perform during all modes of system and plant operation. Based on these safety functions, the systems and components were evaluated per classification documents. The systems were then designated as ISI Class 1, Class 2, Class 3, or non-classed accordingly. This evaluation followed the guidelines of UFSAR Section 5.2.4 for ISI Class 1 and UFSAR Section 6.6 for ISI Classes 2 and 3. Safety related portions of systems are defined by the Piping and Instrumentation Diagrams (P&IDs) with an "S" flag.

When a particular group of components is identified as performing a ISI Class 1, Class 2, or Class 3 safety function, the components are further reviewed to assure the interfaces (boundary valves and boundary barriers) meet the criteria set by 10 CFR 50.2, 10 CFR 50.55a(c)(1), 10 CFR 50.55a(c)(2), and Regulatory Guide 1.26. Although QCNPS is not committed to or licensed in accordance with these documents, Standard Review Plan (SRP) 3.2.2 "System Quality Group Classification," and American National Standards Institute/American Nuclear Society (ANSI/ANS)-58.14-1993 "Nuclear Safety Criteria for the Design of

Stationary Boiling Water Reactor Plants," were also used for guidance in determining the classification boundaries when 10 CFR and Regulatory Guide 1.26 did not address a given situation. The valve positions shown on the system flow diagrams are assumed to be the normal positions during system operation unless otherwise noted.

At the time the construction permits for QCNPS Units 1 and 2 were issued, ASME Section III covered only pressure vessels, primarily nuclear reactor vessels. The majority of piping, pumps, and valves were designed and installed according to the rules of USAS B31.1.0-1967 Edition, "Power Piping." Consequently, the QCNPS ISI Program has essentially no ASME Section III Class 1, 2, or 3 piping systems.

ISI classification boundaries are defined by the P&IDs with a classification flag. A summary of the coding system used on the P&IDs to identify the safety related systems or portions of systems subject to examination is included on Drawing M-12 SH. 3. The Coding Designators 1, 2, 3, and MC, respectively, were used for classifying nonexempt ASME Section XI components. The remaining codings shown on M-12 SH. 3 (Coding Designators 1C, 1F, 1S, 1V, 2E, 2F, 2P, 2S, 2V, 3G, and 3P) were used to identify exempt ASME Section XI components.

The systems and components subject to examinations of Articles IWB-2000, IWC-2000, IWD-2000 and IWF-2000, and pressure tests of Articles IWB-5000, IWC-5000 and IWD-5000 are identified on the QCNPS P&IDs as detailed in Table 2.3-1.

TABLE 2.3-1
QCNPS ISI CLASSIFICATION BOUNDARY DRAWINGS

UNIT 1 & 1/2	UNIT 2	TITLE
M-12, SH. 3	M-12, SH. 3	Piping & Instrumentation Diagram Symbols
M-13, SH. 1 & 2	M-60, SH. 1 & 2	Diagram of Main Steam Piping (MS)
M-15, SH. 1	M-62 SH. 1	Diagram of Reactor Feed Piping (FW)
M-22, SH. 1, 3 & 5	M-69, SH. 1, 3 & 5	Diagram of Service Water Piping -- Diesel Generator Cooling Water (DGCW)
M-34, SH. 1	M-76, SH. 1	Diagram of Pressure Suppression Piping
M-35, SH. 1, 2, & 5	M-77, SH. 1, 2, & 5	Diagram of Nuclear Boiler & Reactor Recirculation Piping (RX & RR)
M-36	M-78	Diagram of Core Spray Piping (CS)
M-37	M-79	Diagram of RHR Service Water Piping (RHR & RHRSW)
M-39, SH. 1, 2, 3 & 4	M-81, SH. 1, 2 & 3	Diagram of Residual Heat Removal Piping (RHR & RHRSW)
M-40	M-82	Diagram of Standby Liquid Control Piping (SBLC)
M-41, SH. 1 & 3	M-83, SH. 1 & 3	Diagram of Control Rod Drive Hydraulic Piping (CRD)
M-46, SH. 1, 2, & 3	M-87, SH. 1, 2, & 3	Diagram of H.P. Coolant Injection Piping (HPCI)
M-47 SH. 1	M-88 SH. 1	Diagram of Reactor Water Clean-Up Piping (RWCU)
M-50 SH. 1	M-89 SH. 1	Diagram of Reactor Core Isolation Cooling Piping (RCIC)
M-70	M-70	Diagram of Safe Shutdown Make-Up Pump System (SSMP)
M-725, SH. 3	M-725, SH. 3	Diagram of Control Room HVAC
M-1056, SH. 1	M-1061, SH. 1	Diagram of High Radiation Sampling System Piping (HRSS)

2.4 ISI Isometric Drawings for Nonexempt ISI Class Components and Supports

ISI isometric and component drawings were developed to detail the ISI Code Class 1, 2, and 3 components (welds, bolting, etc.) and support locations at QCNPS. SPT isometric drawings were also developed to show those components subject to pressure testing. These components and supports are identified on the ISI isometric and component drawings listed in Table 2.4-1.

QCNPS's ISI program, including the database, basis document, and schedule, addresses the non-exempt components which require examination and testing.

A summary of QCNPS Units 1 and 2 ASME Section XI nonexempt components and supports is included in Section 7.0.

TABLE 2.4-1
QCNPS ISI ISOMETRIC AND COMPONENT DRAWINGS
Sheet 1 of 3

UNIT 1 & 1/2	UNIT 2	TITLE
M-3101, SH. 1, 2 & 4	M-3111, SH. 1, 2 & 4	ISI Class 1 Main Steam System
M-3102, SH. 1 & 2	M-3112, SH. 1 & 2	ISI Class 1 Reactor Feedwater System
M-3103, SH. 1-5	M-3113, SH. 1-5	ISI Class 1 Reactor Recirculation System and Jet Pump Instrument
M-3104, SH. 1 & 2	M-3114, SH. 1 & 2	ISI Class 1 Core Spray System
M-3105, SH. 1-3	M-3115, SH. 1-3	ISI Class 1 Residual Heat Removal System
M-3106, SH. 1	M-3116, SH. 1	ISI Class 1 Standby Liquid Control System
M-3107, SH. 1	M-3117, SH. 1	ISI Class 1 Control Rod Drive System
M-3108, SH. 1	M-3118, SH. 1	ISI Class 1 High Pressure Coolant Injection System
M-3109, SH. 1 & 2	M-3119, SH. 1 & 2	ISI Class 1 Reactor Water Cleanup System
M-3110, SH. 1	M-3120, SH. 1	ISI Class 1 Reactor Core Isolation Cooling System
M-3121 SH. 1	M-3121, SH. 2	ISI Class 1 Reactor Vessel
M-3130 SH. 1-3	M-3135 SH. 1-4	ISI Class 2 Core Spray System
M-3131 SH. 1-15	M-3136 SH. 1-13	ISI Class 2 Residual Heat Removal System
M-3132, SH. 1-4	M-3137, SH. 1-4	ISI Class 2 High Pressure Coolant Injection System
M-3134, SH. 1 & 2	M-3139, SH. 1 & 2	ISI Class 2 Control Rod Drive System
M-3140, SH. 1	M-3141, SH. 1	ISI Class 2 ECCS Ring Header and RCIC Suction Line
N/A	M-1042G	ISI Class 2 Reactor Core Isolation Cooling System
M-3143, SH. 1-6	M-3145, SH. 1-6	ISI Class 3 Residual Heat Removal System
M-3144, SH. 1-6 & SH. 11	M-3144, SH. 7-10	ISI Class 3 Diesel Generator Service Water System
M-3202-1	M-3219-1	System Pressure Test Walkdown Isometric Reactor Head Cavity, EL 665'-0"
M-3202-2	M-3219-2	System Pressure Test Walkdown Isometric Drywell Fourth Level, EL-651'-0"
M-3202-3	M-3219-3	System Pressure Test Walkdown Isometric Drywell Third Level, EL 640'-0"
M-3202-4	M-3219-4	System Pressure Test Walkdown Isometric Drywell Second Level, EL 614'-0"

TABLE 2.4-1
QCNPS ISI ISOMETRIC AND COMPONENT DRAWINGS
Sheet 2 of 3

UNIT 1 & 1/2	UNIT 2	TITLE
M-3202-5	M-3219-5	System Pressure Test Walkdown Isometric Drywell First Level, EL 592'-0"
M-3202-6	M-3219-6	System Pressure Test Walkdown Isometric Drywell Basement, EL 579'-0"
M-3202-7	M-3219-7	System Pressure Test Walkdown Isometric Lower Head CRD Area, EL 588'-0"
M-3202-8	M-3219-8	System Pressure Test Walkdown Isometric Instrumentation
M-3203	M-3220	System Pressure Test Walkdown Isometric Head Flange Seal Leak Detection
M-3204, SH. 1 & 2	M-3221, SH. 1 & 2	System Pressure Test Walkdown Isometric Control Rod Drive Hydraulic Piping
M-3205	M-3222	System Pressure Test Walkdown Isometric Standby Liquid Control Piping
M-3206	M-3223	System Pressure Test Walkdown Isometric Standby Liquid Control Piping
M-3207	M-3224	System Pressure Test Walkdown Isometric Standby Liquid Control Piping
M-3208	-------	System Pressure Test Walkdown Isometric Diesel Generator Cooling Water Piping
M-3209	M-3225	System Pressure Test Walkdown Isometric Diesel Generator Cooling Water Piping
M-3210	M-3226	System Pressure Test Walkdown Isometric High Pressure Coolant Injection System
M-3211, SH. 1	M-3227, SH. 1	System Pressure Test Walkdown Isometric ECCS Ring Header & RCIC Suction Line
M-3211, SH. 2	M-3227, SH. 2	System Pressure Test Walkdown Isometric Core Spray Piping
M-3211, SH. 3 & 4	M-3227, SH. 3 & 4	System Pressure Test Walkdown Isometric Residual Heat Removal Piping
M-3211, SH. 5	M-3227, SH. 5	System Pressure Test Walkdown Isometric High Pressure Coolant Injection System
M-3212	M-3228	System Pressure Test Walkdown Isometric ECCS Keepfill Pump and Piping

TABLE 2.4-1
QCNPS ISI ISOMETRIC AND COMPONENT DRAWINGS
Sheet 3 of 3

UNIT 1 & 1/2	UNIT 2	TITLE
M-3213	M-3229	System Pressure Test Walkdown Isometric Diesel Generator Service Water
M-3214, SH. 1, 2, 3, 4, &5	M-3230, SH. 1, 2, 3, 4, &5	System Pressure Test Walkdown Isometric Residual Heat Removal System
M-3215, SH. 1, 2, 3, 4, &5	M-3231, SH. 1, 2, 3, 4, &5	System Pressure Test Walkdown Isometric Residual Heat Removal Service Water System
M-3216, SH. 1, 2 & 3	M-3232, SH. 1, 2 & 3	System Pressure Test Walkdown Isometric High Pressure Coolant Injection System
M-3217	M-3233	System Pressure Test Walkdown Isometric High Pressure Coolant Injection System
M-3218	M-3234	System Pressure Test Walkdown Isometric Core Spray Piping

2.5 Technical Approach and Positions

When the requirements of ASME Section XI are not easily interpreted, QCNPS has reviewed general licensing/regulatory requirements and industry practice to determine a practical method of implementing the Code requirements. The technical approach and position documents contained in this section have been provided to clarify QCNPS's implementation of ASME Section XI requirements. An index which summarizes each technical approach/position is included in Table 2.5-1.

TABLE 2.5-1
TECHNICAL APPROACH AND POSITIONS INDEX/SUMMARIES

Position Number	Revision Date	Status[1]	(Program) Description
I4T-01	0 1/17/03	Active	(SPT) System Leakage Testing of Non-Isolable Buried Components.
I4T-02	0 1/17/03	Active	(SPT) Valve Seats as Pressurization Boundaries.
I4T-03	0 1/17/03	Active	(SPT) Alternative Pressure Test Requirements following Repair and Replacement Activities.

Note 1: Technical Approach and Position Status Options: Active – Current ISI Program Technical Approach is being utilized at QCNPS; Deleted – Technical Approach is no longer being utilized at QCNPS.

TECHNICAL APPROACH AND POSITION NUMBER: I4T-01

(Page 1 of 1)

COMPONENT IDENTIFICATION

Code Class:	3
Reference:	IWA-5244(b)(2)
Examination Category: N/A	
Item Number:	N/A
Description:	System Leakage Testing of Non-Isolable Buried Components.
Component Number:	Non-Isolable Buried Pressure Retaining Components

CODE REQUIREMENT

IWA-5244(b)(2) requires non-isolable buried components be tested to confirm that flow during operation is not impaired.

POSITION

Article IWA-5000 provides no guidance in setting acceptance criteria for what can be considered "adequate flow." In lieu of any formal guidance provided by the Code, QCNPS has established the following acceptance criteria:

- For opened ended lines on systems that require Inservice Testing (IST) of pumps, adherence to IST acceptance criteria is considered as reasonable proof of adequate flow through the lines.

This acceptance criteria will be utilized as proof of adequate flow in order to meet the requirements of IWA-5244(b)(2).

TECHNICAL APPROACH AND POSITION NUMBER: I4T-02

(Page 1 of 1)

COMPONENT IDENTIFICATION

Code Class:	1, 2, and 3
Reference:	IWA-5221
	IWA-5222
Examination Category: B-P, C-H, D-B	
Item Number:	B15.10, B15.30, B15.50, B15.70, C7.10, C7.30, C7.50, C7.70, D2.10, D2.30, D2.50, D2.70
Description:	Valve Seats as Pressurization Boundaries
Component Number:	All Pressure Testing Boundary Valves

CODE REQUIREMENT

IWA-5221 requires the pressurization boundary for system leakage testing extend to those pressure retaining components under operating pressures during normal system service.

System leakage testing is performed in lieu of hydrostatic pressure testing (Paragraph IWA-5222) at or near the end of each inspection interval in accordance Code Case N-498-1 for Class 1, 2, and 3 systems. Code Case N-498-1 require the pressurization boundary extend to all Class 1 components during the system leakage test, and extend to all Class 2 and 3 components included in those portions of systems required to operate or support the system safety function up to and including the first normally closed valve.

POSITION

QCNPS's position is that the pressurization boundary extends up to the valve seat of the valve utilized for isolation. For example, in order to pressure test the Class 1 components, the valve that provides the Class break would be utilized as the isolation point. In this case the true pressurization boundary, and Class break, is actually at the valve seat.

Any requirement to test beyond the valve seat is dependent only on whether or not the piping on the other side of the valve seat is ISI Class 1, 2, or 3.

The extension of the pressurization boundary during an operational test would require an abnormal valve line-up. Extending the boundary for a hydrostatic test would require the over pressurization of low pressure piping at systems that have a high/low pressure interface (such as RHR and Core Spray).

In order to simplify examination of classed components, QCNPS will perform a VT-2 visual examination of the entire boundary valve body and bonnet (during pressurization up to the valve seat).

TECHNICAL APPROACH AND POSITION NUMBER: I4T-03

COMPONENT IDENTIFICATION

Code Class:	1, 2, and 3
Reference:	IWA-4540
Examination Category: N/A	
Item Number:	N/A
Description:	Alternative Pressure Test Requirements following Repair and Replacement Activities
Components Number:	All Class 1, 2, and 3 Pressure Retaining Components

CODE REQUIREMENT

IWA-4540(a) requires a system hydrostatic test be performed after welding on the pressure retaining boundary, or installation of an item by welding or brazing, except as exempted by IWA-4540(b).

POSITION

Hydrostatic tests conducted at elevated pressures are difficult to perform and often represent a true hardship without any compensating increase in plant safety. Some of the difficulties associated with a hydrostatic test include complicated or abnormal valve line-ups, gagging or removing relief valves, additional maintenance on valve internals not normally used for isolation, and substantially increased radiation exposure.

For this reason, QCNPS will utilize ASME Code Case N-416-2 as an alternative to the ASME Section XI repair/replacement hydrostatic pressure testing requirement. Code Case N-416-2 is conditionally approved for use by the NRC in Revision 13 of Regulatory Guide 1.147. QCNPS will implement this Case in accordance with the Regulatory Guide imposed conditions as follows:

(1) Additional surface exams will be performed on the root (pass) layer of Class 3 butt and socket welds when the surface exam method is used in accordance with Section III.
(2) A 4-hour hold time must be maintained prior to the VT-2 visual exam. [Note: This condition is consistent with established regulatory position.]

The Technical Approach established here is to clarify the hold time condition stated in (2) above. The regulatory position referenced affects several pressure testing activities and requirements included in future Code editions and other ASME Code Cases. The position is stated in both related Safety Evaluation Reports and in Federal Rulemaking. For the purpose of establishing this position, QCNPS will take guidance from the latest NRC Proposed Rulemaking affecting 10 CFR 50 as published in the Federal Register, Volume 66, Number 150, dated August 3, 2001.

TECHNICAL APPROACH AND POSITION NUMBER: I4T-03

POSITION (Continued)

Section 2.2.7, System Leakage Tests, and Section 3, Paragraph (b)(2)(xx) both state the NRC position regarding hold times. The position as stated in Section 3 reads "a 10-minute hold time for non-insulated systems and components or a 4-hour hold time for insulated systems and components will be required after attaining system operating pressure."

QCNPS will utilize this regulatory position for the purpose of clarifying Regulatory Guide 1.147, Code Case N-416-2, Condition (2) as stated above. As such, the 4-hour hold time referenced in Condition (2) will only be implemented for those pressure tests conducted after repair/replacement activities on insulated components. If the system or component is not normally insulated, or if the insulation is removed for the purpose of conducting the system leakage test, a 10-minute hold time will be used after attaining test pressure.

3.0 COMPONENT ISI PLAN

The QCNPS Component ISI Plan includes ASME Section XI nonexempt pressure retaining welds, piping structural elements, pressure retaining bolting, attachment welds, pump casings, and valve bodies of ISI Class 1, 2, and 3 components that meet the criteria of Subarticle IWA-1300. These components are identified on the P&IDs listed in Section 2.3, Table 2.3-1. Procedure ER-AA-330-002, "Inservice Inspection of Welds and Components," implements the ASME Section XI Component ISI Plan. This Component ISI Plan also includes component augmented inservice inspection examinations specified by documents other than ASME Section XI as referenced in Section 2.2 of this document.

3.1 QCNPS Nonexempt ISI Class Components

The QCNPS ISI Class 1 components subject to examination are those which are not exempted under the criteria of Subarticle IWB-1220 in the 1989 Edition, No Addenda of ASME Section XI (see Section 3.1.2 below). The QCNPS ISI Class 2 and 3 components identified in P&IDs are those not exempted under the criteria of Subarticles IWC-1220 and Subarticle IWD-1220 in the 1995 Edition, 1996 Addenda of ASME Section XI. A summary of QCNPS Units 1, 2, and 1/2 ASME Section XI nonexempt components is included in Section 7.0.

3.1.1 Identification of ISI Class 1, 2, and 3 Nonexempt Components

ISI Class 1, 2, and 3 components are identified on the ISI Isometrics and ISI Component Drawings listed in Section 2.4, Table 2.4-1. Welded attachments are also identified by controlled QCNPS support drawings.

3.1.2 10 CFR 50.55a(b)(2)(xi) specifies that the 1989 Edition, No Addenda of ASME Section XI, Subarticle IWB-1220 shall be used in lieu of the 1995 Edition, 1996 Addenda of ASME Section XI, Subarticle IWB-1220.

<u>IWB-1220, Components Exempt from Examination (1989 Edition, No Addenda)</u> - The following components (or parts of components) are exempted from the volumetric and surface examination requirements of IWB-2500 per the Code paragraph referenced:

(a) Components that are connected to the Reactor Coolant System and part of the reactor coolant pressure boundary, and that are of such a size and shape so that upon postulated rupture the resulting flow of coolant from the Reactor Coolant System, under normal plant operating conditions, is within the capacity of makeup systems which are operable from on-site emergency power;

Reactor Coolant Makeup Calculation - Exelon has determined through the criteria of Subarticle IWB-1220(a) that Class 1 components which are (1) 1.57" ID and smaller for Liquid filled

components or (2) 3.14" ID and smaller for Steam filled components are exempt from the volumetric and surface examinations. The QCNPS Reactor Coolant Pressure Boundary Normal Makeup Calculation (XCE.040.0202) is referenced in Section 3.3 of this document.

(b)(1) piping of Nominal Pipe Size (NPS) 1 and smaller;

(b)(2) components and their connections in piping of NPS 1 and smaller;

(c) reactor vessel head connections and associated piping, NPS 2 and smaller, made inaccessible by control rod drive penetrations.

3.2 Risk-Informed Examination Requirements

Piping structural elements that fall under RISI Category R-A are risk ranked as High (1, 2, and 3), Medium (4 and 5), and Low (6 and 7). Per the EPRI Topical Report TR-112657, Rev. B-A and Code Case N-578-1, piping structural elements ranked as High or Medium Risk are subject to examination while piping structural elements ranked as Low Risk are not subject to examinations (except for pressure testing). Thin wall welds that were excluded from volumetric examination under ASME Section XI rules per Table IWC-2500-1 are included in the element scope that is potentially subject to RISI examination at QCNPS.

Piping structural elements may be excluded from examination (other than pressure testing) under the RISI Program if the only degradation mechanism present for a given location is inspected for under certain other QCNPS programs such as the Flow Accelerated Corrosion (FAC) or Intergranular Stress Corrosion Cracking (IGSCC) Programs. These piping structural elements will remain part of the FAC or IGSCC programs which already perform "for cause" inspections to detect these degradation mechanisms. Piping structural elements susceptible to FAC or IGSCC along with another degradation mechanism (e.g., thermal fatigue) are retained as part of the RISI scope and are included in the element selection for the purpose of performing exams to detect the additional degradation mechanism.

3.3 Reactor Coolant Pressure Boundary Normal Makeup Calculation

The basis for determining the size of ISI Class 1 water and steam lines exempted for the volumetric and surface examination requirements of IWB-1200 are provided in the following Calculation.

Calculation No. (XCE.040.0202):

In determining the size of the liquid and steam lines exempt from surface and volumetric examination per IWB-1220(a), liquid lines were defined as those which

penetrate the RPV below the normal water level and steam lines as those which penetrate the RPV above the normal water level.

The reactor coolant makeup system at QCNPS consists of the following system(s):

System	Pump Flow Rate	Maximum Fluid Temp.	Emergency Power
Safe Shutdown – UFSAR, Section 5.4.6.5.	400 GPM	140° F	Yes, On-site
RCIC - UFSAR, Section 5.4.6	400 GPM	140° F	Yes, On-site

Water flow rates from a liquid line break are taken as 8000 lbs/sec/ft^2 at 1000 psi. Steam flow rates from a steam line are taken as 2000 lbs/sec/ft^2 at 1000 psi. Makeup water weighs 8.33 lbs per gallon at 70° F. On this basis, the exclusion diameters based on reactor coolant makeup system capacity are as follows:

[General Electric Boiling Water Reactor System Department, Doc No. 22A2750, pg. 7]

$$D_w = \frac{\sqrt{M_{70}\left[\frac{V_{70}}{V_{140}}\right]}}{17.8}$$

$$\mathbf{D_s = 2D_w}$$

where:

D_w = exemption diameter for water in inches of inside pipe diameter.
D_s = exemption diameter for steam in inches of inside pipe diameter.
M_{70} = Volumetric flow rate of makeup water at 70° F in gal/min.
V_{70} = Specific volume of water at 70° F in ft^3/lb$_m$.
V_{140} = Specific volume of water at 140° F in ft^3/lb$_m$.

$$D_w = \frac{\sqrt{800\left[\frac{0.01605}{0.01629}\right]}}{17.8} = 1.57''\ I.D.$$

$$\mathbf{D_s = 2 \times 1.57'' = 3.14''\ I.D.}$$

3.4 Reactor Coolant Pressure Boundary Normal Makeup Calculation For Peripheral CRD Housing Welds

Scope of Examination - Pressure-retaining welds in 10% of the peripheral CRD Housings (ASME Section XI Examination Category B-O, Item Number B14.10)

QCNPS has chosen not to utilize the results of Design Analysis No. QDC-0200-M-1279, therefore, the welds in the peripheral CRD housings will not be exempted from surface and volumetric examination at this time.

Note: QCNPS Design Analysis No. QDC-0200-M-1279, demonstrates that the makeup capacity of 109 lb/sec (800 gpm) of the RCIC and SSMP systems is greater than the potential leakage of 75 lb/sec due to a weld failure in the peripheral CRD housings. This may allow welds in the peripheral CRD housings to be exempted from surface and volumetric examination due to meeting the make-up flow capacity exemption criteria of ASME Section XI Subsubarticle IWB-1220(a). See Reference No. 49 for calculation/justification in Section 10.0 of this document.

4.0 SUPPORT ISI PLAN

The QCNPS Support Program includes the supports of ASME Section XI nonexempt ISI Class 1, 2, and 3 components as described in Section 3.0. Procedure ER-AA-330-003, "Visual Examination of Section XI Component Supports," implements the ASME Section XI Support ISI Plan.

4.1 QCNPS Nonexempt ISI Class Supports

The QCNPS ISI Class 1, 2, and 3 nonexempt supports are those which do not meet the criteria of Subarticle IWF-1230. A summary of QCNPS Units 1, 2, and 1/2 ASME Section XI nonexempt supports is included in Section 7.0.

4.1.1 Identification of ISI Class 1, 2, and 3 Nonexempt Supports

ISI Class 1, 2, and 3 supports are identified on the ISI isometric drawings listed in Section 2.4, Table 2.4-1. Supports are also identified by controlled QCNPS support drawings.

4.2 Snubber Examination and Testing Requirements

4.2.1 ASME Section XI Paragraphs IWF-5200(a) & (b) and IWF-5300(a) & (b) require VT-3 Visual Examinations and Inservice Tests of snubbers to be performed in accordance with the Operation and Maintenance of Nuclear Power Plants (OM), Standard ASME/ANSI OM, Part 4. As allowed by 10 CFR 50.55a(b)(3)(v), QCNPS will use Subsection ISTD, "Inservice Testing of Dynamic Restraints (Snubbers) In Light Water Reactor Power Plants," ASME OM Code, 1995 Edition with the 1996 Addenda, in lieu of the requirements for snubbers in ASME Section XI, Paragraphs IWF-5200(a) & (b) and IWF-5300(a) & (b). Procedure ER-AA-330-004, "Visual Examination of Technical Specification Snubbers," implements visual examination of snubbers. Procedure ER-AA-330-010, "Snubber Functional Testing," implements functional testing of snubbers.

The ASME Section XI ISI Program uses Subsection IWF to define support inspection requirements. The ISI Program maintains the Code Class snubbers in the populations subject to inspection per Subsection IWF. This is done to address the related requirements of Paragraphs IWF-5200(c) and IWF-5300(c). (See Section 4.2.2 below.)

4.2.2 ASME Section XI Paragraphs IWF-5200(c) and IWF-5300(c) require integral and nonintegral attachments for snubbers to be examined in accordance with Subsection IWF of the Code. This results in VT-3 visual examination of the snubber attachment hardware including lugs, bolting, pins, and clamps.

The ASME Section XI ISI Program uses Subsection IWF to define the inspection requirements for all Class 1, Class 2, and Class 3 supports, regardless of type. The ISI Program maintains the Code Class snubbers in the support populations subject to inspection per Subsection IWF. This is done to facilitate scheduling, preparation including insulation removal, and inspection requirements of the snubber attachment hardware (e.g., lugs, bolting, pins, and clamps) per Paragraphs IWF-5200(c) and IWF-5300(c).

5.0 SYSTEM PRESSURE TESTING ISI PLAN

The QCNPS System Pressure Testing (SPT) Program includes all pressure retaining ASME Section XI, ISI Class 1, 2, and 3 components, with the exception of those specifically exempted by Paragraphs IWC-5222(b) and IWD-5240(b). All RISI piping structural elements, regardless of risk classification, remain subject to pressure testing as part of the current ASME Section XI program.

The SPT Program performs system pressure tests and visual inspections on the ISI Class 1, 2, and 3 pressure retaining components to verify system and component structural integrity. This program conducts both Periodic and Interval (10-year frequency) pressure tests as defined in ASME Section XI Inspection Program B. Procedure ER-AA-330-001, "Section XI Pressure Testing," implements the ASME Section XI System Pressure Testing ISI Plan.

All components subject to ASME Section XI System Pressure Testing are shown on the P&IDs listed in Section 2.3, Table 2.3-1, and System Pressure Test Walkdown Isometric Drawings listed in Table 2.4-1.

5.1 Risk-Informed Examinations of Socket Welds

Socket welds selected for examination under the RISI program are to be inspected with a VT-2 exam <u>each</u> refueling outage per ASME Code Case N-578-1 (see footnote 12 in Table 1 of the Code Case). To facilitate this, socket welds selected for inspection under the RISI program shall be pressurized each refueling outage.

7.0 INSERVICE INSPECTION SUMMARY TABLES

The following Tables 7.0-1 and 7.0-2 provide a summary of the ASME Section XI component, support, system pressure testing, and augmented examinations and tests for the Fourth Interval at QCNPS Units 1, 2, and 1/2.

The format of the Inservice Inspection Summary Tables is as depicted below and provides the following information:

Examination Category (with Category Description)	Item Number (or Augmented Number or Risk Category Number)	Description	Exam Requirements	Total Number of Components by System	Relief Request/ TAP Number	Notes
(1)	(2)	(3)	(4)	(5)	(6)	(7)

(1) Examination Category and Examination Category Description:

Provides the examination category and description as identified in ASME Section XI, Tables IWB-2500-1, IWC-2500-1, IWD-2500-1, IWE-2500-1, and IWF-2500-1. Only those examination categories applicable to QCNPS are identified.

Examination Category "N/A" is used to identify Augmented ISI examinations and other QCNPS commitments.

Examination Category "R-A" from Code Case N-578-1 is used in lieu of ASME Section XI Examination Categories B-F, B-J, C-F-1, and C-F-2 to identify Class 1 and 2 piping structural elements for the RISI program.

(2) Item Number (or Augmented Number or Risk Category Number):

Provides the item number as identified in ASME Section XI, Tables IWB-2500-1, IWC-2500-1, IWD-2500-1, IWE-2500-1, and IWF-2500-1. Only those item numbers applicable to QCNPS are identified.

Specific abbreviations such as BWROG, BWRVIP, BWRVIP-75, and 0737 have been developed to identify Augmented ISI examinations and other QCNPS commitments.

For piping structural elements under the RISI program, the Risk Category Number (e.g., 1-5) is used in place of the Item Number.

(3) Description:

Provides the description as identified in ASME Section XI, Tables IWB-2500-1, IWC-2500-1, IWD-2500-1, IWE-2500-1, and IWF-2500-1.

For Augmented inspection commitments, a description of the Augmented requirement is provided.

For Risk-Informed piping examinations, a statement of the Risk Category is provided.

(4) Exam Requirements:

Provides the examination method(s) required by ASME Section XI, Tables IWB-2500-1, IWC-2500-1, IWD-2500-1, IWE-2500-1, and IWF-2500-1.

Provides the examination requirements for augmented components from QCNPS commitments or Relief Requests.

Provides the examination requirements for piping structural elements under the RISI program are in accordance with the EPRI Topical Report TR-112657, Rev. B-A and Code Case N-578-1.

(5) Total Number Of Components by System

Provides the system designator (abbreviations). See Section 2.3, Table 2.3-1 for a list of these systems.

This column also provides the number of components within a particular system for that Item Number, Augmented Number, or Risk Category Number.

(6) Relief Request/TAP Number

Provides a listing of Relief Request/Technical Approach & Position (TAP) numbers applicable to specific components, the ASME Section XI Item Number, Augmented Number, or Risk Category Number. Relief Requests that generically apply to all components, or an entire class are not listed. If a Relief Request/ TAP number is identified, see the corresponding relief request in Section 8.0 or the technical approach and position in Section 2.5.

(7) Notes

Provides a listing of program notes applicable to the ASME Section XI Item Number, Augmented Number, or Risk Category Number. If a program note number is identified, see the corresponding program note at the end of the Table 7.0-2.

Unit 1 & 1/2
Inservice Inspection Summary Table 7.0-1

Examination Category (with Category Description)	Item Number	Description	Exam Requirements	Total Number of Components by System	Relief Request/ TAP Number	Notes
B-A Pressure Retaining Welds in Reactor Vessel	B1.11	Circumferential Shell Welds	Volumetric	RPV: 4	I4R-04	
	B1.12	Longitudinal Shell Welds	Volumetric	RPV: 15	I4R-04	
	B1.21	Circumferential Head Welds	Volumetric	RPV: 3	I4R-04	
	B1.22	Meridional Head Welds	Volumetric	RPV: 16	I4R-04	
	B1.30	Shell-to-Flange Weld	Volumetric	RPV: 1		
	B1.40	Head-to-Flange Weld	Volumetric & Surface	RPV: 1		
	B1.51	Beltline Region Repair Weld	Volumetric	RPV: 5	I4R-04	
B-D Full Penetration Welds of Nozzles in Vessels	B3.90	Nozzle-to-Vessel Welds (Reactor Vessel)	Volumetric	RPV: 29		
	B3.100	Nozzle Inside Radius Section (Reactor Vessel)	Volumetric	RPV:29	I4R-01	

Unit 1 & 1/2
Inservice Inspection Summary Table 7.0-1

Examination Category (with Category Description)	Item Number	Description	Exam Requirements	Total Number of Components by System	Relief Request/ TAP Number	Notes
B-G-1 Pressure Retaining Bolting, Greater Than 2 in. In Diameter	B6.10	Closure Head Nuts (Reactor Vessel)	Visual, VT-1	RR: 92		
	B6.20	Closure Studs, in place (Reactor Vessel)	Volumetric	RR: 92		
	B6.30	Closure Studs, when removed (Reactor Vessel)	Volumetric & Surface	RR: 92		
	B6.40	Threads in Flange (Reactor Vessel)	Volumetric	RPV: 92		
	B6.50	Closure Washers, Bushings (Reactor Vessel)	Visual, VT-1	RPV: 92		
	B6.180	Bolts and Studs (Pumps)	Volumetric	RR: 32		
	B6.190	Flange Surface, when connection disassembled (Pumps)	Visual, VT-1	RR: 2		
	B6.200	Nuts, Bushings, and Washers (Pumps)	Visual, VT-1	RR: 32		
B-G-2 Pressure Retaining Bolting, 2 in. and Less In Diameter	B7.50	Bolts, Studs, and Nuts (Piping)	Visual, VT-1	MS: 13 RPV: 3 RR: 2 RWCU: 1		
	B7.70	Bolts, Studs, and Nuts (Valves)	Visual, VT-1	CSA: 3 CSB: 3 FWA: 3 FWB: 3 HPCI: 2 MS: 8 RHRA: 3 RHRB: 3 RR: 6 RWCU: 3 SDC: 2		

Unit 1 & 1/2
Inservice Inspection Summary Table 7.0-1

Examination Category (with Category Description)	Item Number	Description	Exam Requirements	Total Number of Components by System	Relief Request/ TAP Number	Notes
B-K Welded Attachments for Vessels, Piping, Pumps, and Valves	B10.10	Welded Attachments to Pressure Vessels	Surface	RPV: 9		
	B10.20	Welded Attachments to Piping	Surface	FWA: 1 FWB: 1 HPCI: 1 MS: 12 RHRA: 1 RHRB: 1 RR: 9 SDC: 1		
	B10.30	Welded Attachments to Pumps	Surface	RR: 6		
	B10.40	Welded Attachments to Valves	Surface	RR: 2		
B-L-2 Pump Casings	B12.20	Pump Casings	Visual, VT-3	RR: 2		
B-M-1 Pressure Retaining Welds Valve Body	B12.40	Valve Body Welds (NPS 4 or Larger)	Volumetric	MS: 4		
B-M-2 Valve Bodies	B12.50	Valve Bodies (NPS 4 or Larger)	Visual, VT-3	CSA: 3 CSB: 3 FWA: 3 FWB: 3 HPCI: 2 MS: 21 RHRA: 3 RHRB: 3 RR: 6 RWCU: 3 SDC: 2		

Unit 1 & 1/2
Inservice Inspection Summary Table 7.0-1

Examination Category (with Category Description)	Item Number	Description	Exam Requirements	Total Number of Components by System	Relief Request/ TAP Number	Notes
B-N-1 Interior of Reactor Vessel	B13.10	Vessel Interior	Visual, VT-3	RPV: 1		
B-N-2 Welded Core Support Structures and Interior Attachments to Reactor Vessels	B13.20	Interior Attachments Within Beltline Region	Visual, VT-1	RPV: 26		
	B13.30	Interior Attachments Beyond Beltline Region	Visual, VT-3	RPV: 40		
	B13.40	Core Support Structure	Visual, VT-3	RPV: 1		
B-O Pressure Retaining Welds in Control Rod Housings	B14.10	Welds in CRD Housing (10% of Peripheral CRD Housings)	Volumetric or Surface	RPV: 32		

Unit 1 & 1/2
Inservice Inspection Summary Table 7.0-1

Examination Category (with Category Description)	Item Number	Description	Exam Requirements	Total Number of Components by System	Relief Request/ TAP Number	Notes
B-P	B15.10	Reactor Vessel - System Leakage Test	Visual, VT-2	CRD	I4R-07	
All Pressure	B15.50	Piping - System Leakage Test	Visual, VT-2	CS	I4T-02	
Retaining Components	B15.60	Pumps - System Leakage Test	Visual, VT-2	FW	I4T-03	
(Periodic)	B15.70	Valves - System Leakage Test	Visual, VT-2	HPCI		
				MS		
				RCIC		
				RHR		
				RR		
				RWCU		
				RX		
				SBLC		

Unit 1 & 1/2
Inservice Inspection Summary Table 7.0-1

Examination Category (with Category Description)	Item Number	Description	Exam Requirements	Total Number of Components by System	Relief Request/ TAP Number	Notes
C-A Pressure Retaining Welds in Pressure Vessels	C1.10	Shell Circumferential Welds	Volumetric	RHRA: 3 RHRB: 3		
	C1.20	Head Circumferential Welds	Volumetric	RHRA: 1 RHRB: 1		
C-B Pressure Retaining Nozzle Welds in Vessels	C2.31	Reinforcing Plate Welds to Nozzle & Vessel for Nozzles with Reinforcing Plates in Vessels, Greater than 1/2" Nominal Thickness	Surface	ECCS: 4 RHRA: 4 RHRB: 4		
	C2.33	Nozzle-to-Shell (or Head) Welds with Reinforcing Plates when Inside of Vessel is Inaccessible for Vessels, Greater than 1/2" Nominal Thickness	Visual, VT-2	ECCS: 4 RHRA: 2 RHRB: 2		
C-C Welded Attachments for Vessels, Piping, Pumps, and Valve	C3.10	Welded Attachments to Pressure Vessels	Surface	RHRA: 4 RHRB: 4		
	C3.20	Welded Attachments to Piping	Surface	CRD: 2 CSA: 5 CSB: 5 ECCS: 2 HPCI: 3 RHR: 1 RHRA: 5 RHRB: 4		
	C3.30	Welded Attachments to Pumps	Surface	CSA: 1 CSB: 1		

Unit 1 & 1/2
Inservice Inspection Summary Table 7.0-1

Examination Category (with Category Description)	Item Number	Description	Exam Requirements	Total Number of Components by System	Relief Request/ TAP Number	Notes
C-H All Pressure Retaining Components (Periodic)	C7.10	Pressure Vessels - System Leakage Test	Visual, VT-2	CRD CS ECCS FW HPCI RCIC RHR RPV Head Flange RR SBLC	I4R-05 I4R-06 I4R-07 I4T-02 I4T-03	
	C7.30	Piping - System Leakage Test	Visual, VT-2			
	C7.50	Pumps - System Leakage Test	Visual, VT-2			
	C7.70	Valves - System Leakage Test	Visual, VT-2			

Unit 1 & 1/2
Inservice Inspection Summary Table 7.0-1

Examination Category (with Category Description)	Item Number	Description	Exam Requirements	Total Number of Components by System	Relief Request/ TAP Number	Notes
D-A Welded Attachments for Vessels, Piping, Pumps, and Valves	D1.20	Welded Attachments to Piping	Visual, VT-1	DGCW: 2+2 RHRSW: 30+1		
D-B All Pressure Retaining Components (Periodic)	D2.10	Pressure Vessels - System Leakage Test	Visual, VT-2	DGCW HVAC PS RHRSW	I4R-07 I4T-01 I4T-02 I4T-03	
	D2.30	Piping - System Leakage Test	Visual, VT-2			
	D2.50	Pumps - System Leakage Test	Visual, VT-2			
	D2.70	Valves - System Leakage Test	Visual, VT-2			
D-B All Pressure Retaining Components (Interval)	D2.20	Pressure Vessels - System Hydrostatic Test	Visual, VT-2	DGCW HVAC PS RHRSW	I4R-07 I4T-01 I4T-02 I4T-03	
	D2.40	System Hydrostatic Test - Piping - System Hydrostatic Test	Visual, VT-2			
	D2.60	Pumps - System Hydrostatic Test	Visual, VT-2			
	D2.80	Valves - System Hydrostatic Test	Visual, VT-2			

Unit 1 & 1/2
Inservice Inspection Summary Table 7.0-1

Examination Category (with Category Description)	Item Number	Description	Exam Requirements	Total Number of Components by System	Relief Request/ TAP Number	Notes
E-A Containment Surfaces	E1.11	Containment Vessel; Accessible Surface Areas	General Visual	67		
	E1.12	Containment Vessel; Accessible Surface Areas	Visual, VT-3	228		
	E1.20	Vent System Accessible Surface Areas	Visual, VT-3	140		
E-C Containment Surfaces Requiring Augmented Examination	E4.11	Containment Surface Areas Visible Surfaces	Visual, VT-1	None		
	E4.12	Containment Surface Areas; Surface Area Grid, Minimum Wall Thickness Location	Volumetric	None		
E-D Seals, Gaskets & Moisture Barriers	E5.10	Seals	Visual, VT-3	N/A	CR-21	
	E5.20	Gaskets	Visual, VT-3	N/A	CR-21	
	E5.30	Moisture Barriers	Visual, VT-3	4		
E-G Pressure Retaining Bolting	E8.10	Bolted Connections; Surfaces	General Visual	54	CR-30	
	E8.20	Bolted Connections; Bolts and Nuts	Torque/Tension	N/A	CR-24	
E-P All Pressure Retaining Components	E9.10	Containment Vessel; Pressure Retaining Boundary	Appendix J	Torus, DW, Vents		
	E9.20	Containment Vessel; Containment Penetration Bellows	Appendix J	In accordance with Procedure QCTP 0130-01		
	E9.30	Containment Vessel; Airlocks	Appendix J	In accordance with Procedure QCTP 0130-01		
	E9.40	Containment Vessel; Seals and Gaskets	Appendix J	In accordance with Procedure QCTP 0130-01		

Unit 1 & 1/2
Inservice Inspection Summary Table 7.0-1

Examination Category (with Category Description)	Item Number	Description	Exam Requirements	Total Number of Components by System	Relief Request/ TAP Number	Notes
F-A Supports	F1.10	Class 1 Piping Supports	Visual, VT-3	CSA: 5 CSB: 5 FWA: 7 FWB: 7 HPCI: 5 MS: 40 RHRA: 6 RHRB: 6 RR: 37 RWCU: 14 SDC: 6		1
	F1.20	Class 2 Piping Supports	Visual, VT-3	CRD: 24 CSA: 13 CSB: 22 ECCS: 30 FWB: 1 HPCI: 51 RHR: 13 RHRA: 34 RHRB: 37		1
	F1.30	Class 3 Piping Supports	Visual, VT-3	DGCW: 96+63 RHRSW: 126+4		1 2

Unit 1 & 1/2
Inservice Inspection Summary Table 7.0-1

Examination Category (with Category Description)	Item Number	Description	Exam Requirements	Total Number of Components by System	Relief Request/ TAP Number	Notes
F-A Supports (Continued)	F1.40	Supports Other Than Piping Supports (Class 1, 2, 3, and MC)	Visual, VT-3	CSA: 1 CSB: 1 DGCW: 1+1 HPCI: 2 JPI: 2 RHRA: 8 RHRB: 8 RHRSW: 8 RPV: 9 RR: 12		1 2
N/A Augmented Components	BWROG	BWR Feedwater Nozzle and Control Rod Drive Return Line Nozzle Cracking Components (BWROG)	Volumetric	FWA: 2 FWB: 2		
	BWRVIP	IGSCC Management Program BWR Vessel Internals and Piping Components (GE SIL's and RICSIL's)	Various	In accordance with BWRVIP Program		
	BWRVIP -75	Intergranular Stress Corrosion Cracking (IGSCC) in BWR Austenitic Stainless Steel Piping Components and BWRVIP-75 "Vessel and Internals Project Technical Basis for Revisions to Generic Letter 88-01 Inspection Schedules"	Volumetric	CSA: 15 CSB: 11 JPI: 10 RHRA: 11 RHRB: 15 RPV: 7 RR: 91 SDC: 12		4
	0737	Leak testing and periodic visual examinations of systems outside of primary containment which could contain highly radioactive fluids during a serious transient or accident (NUREG 0737)	VT-2	CS, HPCI, MS, RHR, RCIC, RR RWCU		

Unit 1 & 1/2
Inservice Inspection Summary Table 7.0-1

Examination Category (with Category Description)	Risk Category Number	Description	Exam Requirements	Total Number of Components by System	Relief Request/ TAP Number	Notes
R-A Risk-Informed Piping Examinations	1	Risk Category 1 Elements	See Notes	FWA: 12 FWB: 8	I4R-02	3 5
	2	Risk Category 2 Elements	See Notes	CSA: 12 CSB: 9 RHR: 5 RHRA: 68 RHRB: 73 SDC: 5	I4R-02	3 5
	3	Risk Category 3 Elements	See Notes	FWA: 1	I4R-02	3, 5
	4	Risk Category 4 Elements	See Notes	CSA: 14 CSB: 13 ECCS: 54 HPCI: 31 MS: 122 RCIC: 8 RHRA: 33 RHRB: 42 RPV: 2 RR: 36 RWCU: 26	I4R-02	3 5
	5	Risk Category 5 Elements	See Notes	RHR: 19 RHRA: 13 RHRB: 12	I4R-02	3 5

Unit 2
Inservice Inspection Summary Table 7.0-2

Examination Category (with Category Description)	Item Number	Description	Exam Requirements	Total Number of Components by System	Relief Request/ TAP Number	Notes
B-A Pressure Retaining Welds in Reactor Vessel	B1.11	Circumferential Shell Welds	Volumetric	RPV: 4	I4R-04	
	B1.12	Longitudinal Shell Welds	Volumetric	RPV: 13	I4R-04	
	B1.21	Circumferential Head Welds	Volumetric	RPV: 3	I4R-04	
	B1.22	Meridional Head Welds	Volumetric	RPV: 16	I4R-04	
	B1.30	Shell-to-Flange Weld	Volumetric	RPV: 1		
	B1.40	Head-to-Flange Weld	Volumetric & Surface	RPV: 1		
	B1.51	Beltline Region Repair Weld	Volumetric	RPV: 1	I4R-04	
B-D Full Penetration Welds of Nozzles in Vessels	B3.90	Nozzle-to-Vessel Welds (Reactor Vessel)	Volumetric	RPV: 29		
	B3.100	Nozzle Inside Radius Section (Reactor Vessel)	Volumetric	RPV: 29	I4R-01	

Unit 2
Inservice Inspection Summary Table 7.0-2

Examination Category (with Category Description)	Item Number	Description	Exam Requirements	Total Number of Components by System	Relief Request/ TAP Number	Notes
B-G-1 Pressure Retaining Bolting, Greater Than 2 in. in Diameter	B6.10	Closure Head Nuts (Reactor Vessel)	Visual, VT-1	RPV: 92		
	B6.20	Closure Studs, in place (Reactor Vessel)	Volumetric	RPV: 92		
	B6.30	Closure Studs, when removed (Reactor Vessel)	Volumetric & Surface	RPV: 92		
	B6.40	Threads in Flange (Reactor Vessel)	Volumetric	RPV: 92		
	B6.50	Closure Washers, Bushings (Reactor Vessel)	Visual, VT-1	RPV: 92		
	B6.180	Bolts & Studs (Pumps)	Volumetric	RR: 32		
	B6.190	Flange Surface, when connection disassembled (Pumps)	Visual, VT-1	RR: 2		
	B6.200	Nuts, Bushings, and Washers (Pumps)	Visual, VT-1	RR: 32		
B-G-2 Pressure Retaining Bolting, 2 in. and Less In Diameter	B7.50	Bolts, Studs, and Nuts (Piping)	Visual, VT-1	MS: 13 RPV: 3 RR: 2 RWCU: 1		
	B7.70	Bolts, Studs, and Nuts (Valves)	Visual, VT-1	CSA: 3 CSB: 3 FWA: 3 FWB: 3 HPCI: 2 MS: 8 RHRA: 3 RHRB: 3 RR: 6 RWCU: 3 SDC: 2		

Unit 2
Inservice Inspection Summary Table 7.0-2

Examination Category (with Category Description)	Item Number	Description	Exam Requirements	Total Number of Components by System	Relief Request/ TAP Number	Notes
B-K Welded Attachments for Vessels, Piping, Pumps, and Valves	B10.10	Welded Attachments to Pressure Vessels	Surface	RPV: 9		
	B10.20	Welded Attachments to Piping	Surface	CSA: 2 CSB: 1 FWA: 1 FWB: 1 HPCI: 1 MS: 13 RHRA: 1 RHRB: 1 RR: 4 SDC: 1		
	B10.30	Welded Attachments to Pumps	Surface	RR: 6		
	B10.40	Welded Attachments to Valves	Surface	RR: 2		
B-L-2 Pump Casings	B12.20	Pump Casings	Visual, VT-3	RR: 2		
B-M-2 Valve Bodies	B12.50	Valve Bodies, (NPS 4 or Larger)	Visual, VT-3	CSA: 3 CSB: 3 FWA: 3 FWB: 3 HPCI: 2 MS: 21 RHRA: 3 RHRB: 3 RR: 6 RWCU: 3 SDC: 2		

Unit 2
Inservice Inspection Summary Table 7.0-2

Examination Category (with Category Description)	Item Number	Description	Exam Requirements	Total Number of Components by System	Relief Request/ TAP Number	Notes
B-N-1 Interior of Reactor Vessel	B13.10	Vessel Interior	Visual, VT-3	RPV: 1		
B-N-2 Welded Core Support Structures and Interior Attachments to Reactor Vessels	B13.20	Interior Attachments Within Beltline Region	Visual, VT-1	RPV: 26		
	B13.30	Interior Attachments Beyond Beltline Region	Visual, VT-3	RPV: 40		
	B13.40	Core Support Structure	Visual, VT-3	RPV: 1		
B-O Pressure Retaining Welds in Control Rod Housings	B14.10	Welds in CRD Housing (10% of Peripheral CRD Housings)	Volumetric or Surface	RPV: 32		

Unit 2
Inservice Inspection Summary Table 7.0-2

Examination Category (with Category Description)	Item Number	Description	Exam Requirements	Total Number of Components by System	Relief Request/ TAP Number	Notes
B-P All Pressure Retaining Components (Periodic)	B15.10	Reactor Vessel - System Leakage Test	Visual, VT-2	CRD CS FW HPCI MS RCIC RHR RR RWCU RX SBLC	I4R-07 I4T-02 I4T-03	
	B15.50	Piping - System Leakage Test	Visual, VT-2			
	B15.60	Pumps - System Leakage Test	Visual, VT-2			
	B15.70	Valves - System Leakage Test	Visual, VT-2			

Unit 2
Inservice Inspection Summary Table 7.0-2

Examination Category (with Category Description)	Item Number	Description	Exam Requirements	Total Number of Components by System	Relief Request/ TAP Number	Notes
C-A Pressure Retaining Welds in Pressure Vessels	C1.10	Shell Circumferential Welds	Volumetric	RHRA: 3 RHRB: 3		
	C1.20	Head Circumferential Welds	Volumetric	RHRA: 1 RHRB: 1		
C-B Pressure Retaining Nozzle Welds in Vessels	C2.31	Reinforcing Plate Welds to Nozzle & Vessel for Nozzles with Reinforcing Plates in Vessels, Greater than 1/2" Nominal Thickness	Surface	ECCS: 4 RHRA: 4 RHRB: 4		
	C2.33	Nozzle-to-Shell (or Head) Welds with Reinforcing Plates when Inside of Vessel is Inaccessible for Vessels, Greater than 1/2" Nominal Thickness	Visual, VT-2	ECCS: 4 RHRA: 2 RHRB: 2		
C-C Welded Attachments for Vessels, Piping, Pumps, and Valves	C3.10	Welded Attachments to Pressure Vessels	Surface	RHRA: 4 RHRB: 4		
	C3.20	Welded Attachments to Piping	Surface	CRD: 2 CSA: 4 CSB: 2 ECCS: 2 HPCI: 1 RHR: 1 RHRA: 3 RHRB: 4		
	C3.30	Welded Attachments to Pumps	Surface	CSA: 1 CSB: 1		

Unit 2
Inservice Inspection Summary Table 7.0-2

Examination Category (with Category Description)	Item Number	Description	Exam Requirements	Total Number of Components by System	Relief Request/ TAP Number	Notes
C-H All Pressure Retaining Components (Periodic)	C7.10	Pressure Vessels - System Leakage Test	Visual, VT-2	CRD CS ECCS FW HPCI RCIC RHR RPV Head Flange RR SBLC	I4R-05 I4R-06 I4R-07 I4T-02 I4T-03	
	C7.30	Piping - System Leakage Test	Visual, VT-2			
	C7.50	Pumps - System Leakage Test	Visual, VT-2			
	C7.70	Valves - System Leakage Test	Visual, VT-2			

Unit 2
Inservice Inspection Summary Table 7.0-2

Examination Category (with Category Description)	Item Number	Description	Exam Requirements	Total Number of Components by System	Relief Request/ TAP Number	Notes
D-A Welded Attachments for Vessels, Piping, Pumps, and Valves	D1.20	Welded Attachments - Piping	Visual, VT-1	DGCW: 3 RHRSW: 27		
D-B All Pressure Retaining Components (Periodic)	D2.10	Pressure Vessels - System Leakage Test	Visual, VT-2	DGCW HVAC PS RHRSW	I4R-07 I4T-01 I4T-02 I4T-03	
	D2.30	Piping - System Leakage Test	Visual, VT-2			
	D2.50	Pumps - System Leakage Test	Visual, VT-2			
	D2.70	Valves - System Leakage Test	Visual, VT-2			
D-B All Pressure Retaining Components (Interval)	D2.20	Pressure Vessels - System Hydrostatic Test	Visual, VT-2	DGCW HVAC PS RHRSW	I4R-07 I4T-01 I4T-02 I4T-03	
	D2.40	Piping - System Hydrostatic Test	Visual, VT-2			
	D2.60	Pumps - System Hydrostatic Test	Visual, VT-2			
	D2.80	Valves - System Hydrostatic Test	Visual, VT-2			

Unit 2
Inservice Inspection Summary Table 7.0-2

Examination Category (with Category Description)	Item Number	Description	Exam Requirements	Total Number of Components by System	Relief Request/ TAP Number	Notes
E-A Containment Surfaces	E1.11	Containment Vessel; Accessible Surface Areas	General Visual	67		
	E1.12	Containment Vessel; Accessible Surface Areas	Visual, VT-3	229		
	E1.20	Vent System Accessible Surface Areas	Visual, VT-3	140		
E-C Containment Surfaces Requiring Augmented Examination	E4.11	Containment Surface Areas Visible Surfaces	Visual, VT-1	None		
	E4.12	Containment Surface Areas; Surface Area Grid, Minimum Wall Thickness Location	Volumetric	None		
E-D Seals, Gaskets & Moisture Barriers	E5.10	Seals	Visual, VT-3	N/A	CR-21	
	E5.20	Gaskets	Visual, VT-3	N/A	CR-21	
	E5.30	Moisture Barriers	Visual, VT-3	4		
E-G Pressure Retaining Bolting	E8.10	Bolted Connections; Surfaces	General Visual	55	CR-30	
	E8.20	Bolted Connections; Bolts and Nuts	Torque/Tension	N/A	CR-24	
E-P All Pressure Retaining Components	E9.10	Containment Vessel; Pressure Retaining Boundary	Appendix J	Torus, DW, Vents		
	E9.20	Containment Vessel; Containment Penetration Bellows	Appendix J	In accordance with Procedure QCTP 0130-01		
	E9.30	Containment Vessel; Airlocks	Appendix J	In accordance with Procedure QCTP 0130-01		
	E9.40	Containment Vessel; Seals and Gaskets	Appendix J	In accordance with Procedure QCTP 0130-01		

Unit 2
Inservice Inspection Summary Table 7.0-2

Examination Category (with Category Description)	Item Number	Description	Exam Requirements	Total Number of Components by System	Relief Request/ TAP Number	Notes
F-A Supports	F1.10	Class 1 Piping Supports	Visual, VT-3	CSA: 5 CSB: 6 FWA: 7 FWB: 6 HPCI: 7 MS: 37 RHRA: 5 RHRB: 6 RR: 27 RWCU: 13 SDC: 5		1
	F1.20	Class 2 Piping Supports	Visual, VT-3	CRD: 24 CSA: 18 CSB: 27 ECCS: 30 FWB: 1 HPCI: 42 RHR: 15 RHRA: 31 RHRB: 39		1
	F1.30	Class 3 Piping Supports	Visual, VT-3	DGCW: 111 RHRSW: 115		1

Unit 2
Inservice Inspection Summary Table 7.0-2

Examination Category (with Category Description)	Item Number	Description	Exam Requirements	Total Number of Components by System	Relief Request/ TAP Number	Notes
F-A Supports (Continued)	F1.40	Supports Other Than Piping Supports (Class 1, 2, 3, and MC)	Visual, VT-3	CSA: 1 CSB: 1 DGCW: 1 HPCI: 2 JPI: 2 RHRA: 10 RHRB: 10 RHRSW: 8 RPV: 9 RR: 12		1
N/A Augmented Components	BWROG	BWR Feedwater Nozzle and Control Rod Drive Return Line Nozzle Cracking Components (BWROG)	Volumetric	FWA: 2 FWB: 2		
	BWRVIP	IGSCC Management Program BWR Vessel Internals and Piping Components (GE SIL's and RICSIL's)	Various	In accordance with BWRVIP Program		
	BWRVIP -75	Intergranular Stress Corrosion Cracking (IGSCC) in BWR Austenitic Stainless Steel Piping Components and BWRVIP-75 "Vessel and Internals Project Technical Basis for Revisions to Generic Letter 88-01 Inspection Schedules"	Volumetric	CSA: 11 CSB: 10 JPI: 10 RHRA: 11 RHRB: 15 RPV: 7 RR: 95 SDC: 13		4
	0737	Leak testing and periodic visual examinations of systems outside of primary containment which could contain highly radioactive fluids during a serious transient or accident (NUREG 0737)	VT-2	CS, HPCI, MS, RHR, RCIC, RR RWCU		

Unit 2
Inservice Inspection Summary Table 7.0-2

Examination Category (with Category Description)	Item Number	Description	Exam Requirements	Total Number of Components by System	Relief Request/ TAP Number	Notes
R-A Risk-Informed Piping Examinations	1	Risk Category 1 Elements	See Notes	FWA: 12 FWB: 8	I4R-02	3 5
	2	Risk Category 2 Elements	See Notes	CSA: 9 CSB: 10 RHR: 4 RHRA: 62 RHRB: 79 SDC: 5	I4R-02	3 5
	3	Risk Category 3 Elements	See Notes	FWA: 1	I4R-02	3, 5
	4	Risk Category 4 Elements	See Notes	CSA: 14 CSB: 14 ECCS: 53 HPCI: 17 MS: 118 RCIC: 7 RHRA: 36 RHRB: 32 RPV: 2 RR: 37 RWCU: 28	I4R-02	3 5
	5	Risk Category 5 Elements	See Notes	RHR: 19 RHRA: 14 RHRB: 16	I4R-02	3 5

Inservice Inspection Summary Table Program Notes

Note #	Note Summary
1	ISI snubber visual examinations are performed in accordance with the ASME OM Code, Subsection ISTD Program. The number of QCNPS Unit 1, 2, and 1/2 supports identified includes snubbers for the visual examination of the integral and nonintegral attachments per Paragraphs IWF-5200(c) and IWF-5300(c). The snubbers are scheduled and administratively tracked in the ISI Program; however, the ASME OM Code, Subsection ISTD Program will be the mechanism for actually performing the visual examinations scheduled within the ISI Program.
2	The Unit 1 population counts include those components that are common to both units (typically designated as "1/2") and are listed in Table following a "+" symbol.
3	For the Fourth Inspection Interval, QCNPS's Class 1 and 2 piping inspection program will be governed by risk-informed regulations. The RISI program methodology is described in the EPRI Topical Report TR-112657, Rev. B-A and Code Case N-578-1. The RISI program scope will be implemented as an alternative to the 1995 Edition with the 1996 Addenda of the ASME Section XI Code examination program for Class 1 B-F and B-J welds and Class 2 C-F-1 and C-F-2 welds in accordance with 10 CFR 50.55a(a)(3)(i).
4	IGSCC Category A welds subsumed into the RISI program.
5	Examination requirements within the RISI program are determined by the various degradation mechanisms present at each individual piping structural element. See EPRI TR-112657, Rev. B-A and Code Case N-578-1 for specific exam method requirements.

8.0 RELIEF REQUESTS FROM ASME SECTION XI

This section contains relief requests written per 10 CFR 50.55a(a)(3)(i) for situations where alternatives to ASME Section XI requirements provide an acceptable level of quality and safety; per 10 CFR 50.55a(a)(3)(ii) for situations where compliance with ASME Section XI requirements results in a hardship or an unusual difficulty without a compensating increase in the level of quality and safety; and per 10 CFR 50.55a(g)(5)(iii) for situations where ASME Section XI requirements are considered impractical.

The following NRC guidance was utilized to determine the correct 10 CFR 50.55a Paragraph citing for QCNPS relief requests. 10 CFR 50.55a(a)(3)(i) and 10 CFR 50.55a(a)(3)(ii) provide alternatives to the requirements of ASME Section XI, while 10 CFR 50.55a(g)(5)(iii) recognizes situational impracticalities.

10 CFR 50.55a(a)(3)(i): Cited in relief requests when alternatives to the ASME Section XI requirements which provide an acceptable level of quality and safety are proposed. Examples are relief requests which propose alternative non-destructive examination (NDE) methods and/or examination frequency.

10 CFR 50.55a(a)(3)(ii): Cited in relief requests when compliance with the ASME Section XI requirements is deemed to be a hardship or unusual difficulty without a compensating increase in the level of quality and safety. Examples of hardship and/or unusual difficulty include, but are not limited to, excessive radiation exposure, disassembly of components solely to provide access for examinations, and development of sophisticated tooling that would result in only minimal increases in examination coverage.

10 CFR 50.55a(g)(5)(iii): Cited in relief requests when conformance with ASME Section XI requirements is deemed impractical. Examples of impractical requirements are situations where the component would have to be redesigned, or replaced to enable the required inspection to be performed.

An index for QCNPS relief requests is included in Table 8.0-1. The "I4R-XX" relief request is applicable to ISI and SPT.

TABLE 8.0-1
INSERVICE INSPECTION PROGRAM RELIEF REQUEST INDEX
Sheet 1 of 2

Relief Request	Revision Date[3]	Status[2]	(Program) Description/ Approval Summary[1]
I4R-01	0 1/17/03	Submitted	(ISI) Inspection of Standby Liquid Control nozzle inner radius. **Revision 0 Submitted.**
I4R-02	0 1/17/03	Submitted	(ISI) Alternate Risk-Informed Selection and Examination Criteria for Category B-F, B-J, C-F-1, and C-F-2 Pressure Retaining Piping Welds. **Revision 0 Submitted.**
I4R-03	0 1/17/03	Submitted	(ISI) Alternative Requirements to ASME Section XI, Appendix VII, Subsubarticle VII-240, "Annual Training." **Revision 0 Submitted.**
I4R-04	0 1/17/03	Submitted	(ISI) Alternative Requirements to Appendix VIII, Supplement 4, "Qualification Requirements for the Clad/Base Metal Interface of Reactor Pressure Vessel." **Revision 0 Submitted.**
I4R-05	0 1/17/03	Submitted	(SPT) Exemption from Pressure Testing Reactor Pressure Vessel Head Flange Seal Leak Detection System. **Revision 0 Submitted.**
I4R-06	0 1/17/03	Submitted	(SPT) Continuous Pressure Monitoring of the Control Rod Drive (CRD) System Accumulators. **Revision 0 Submitted.**
I4R-07	0 1/17/03	Submitted	(SPT) Alternative Rules for Corrective Measures if Leakage Occurs at Bolted Connections. **Revision 0 Submitted.**
I4R-08	0 1/17/03	Submitted	(ISI) Evaluation Criteria for Temporary Acceptance of Flaws. **Revision 0 Submitted.**

TABLE 8.0-1
INSERVICE INSPECTION PROGRAM RELIEF REQUEST INDEX
Sheet 2 of 2

Relief Request	Revision Date[3]	Status[2]	(Program) Description/ Approval Summary[1]
I4R-09	0 1/17/03	Submitted	(ISI) Pressure Retaining Welds in Piping, Subject to Appendix VIII, Supplement 11. **Revision 0 Submitted.**

Note 1: The NRC grants relief requests pursuant to 10 CFR 50.55a(g)(6)(i) when Code requirements cannot be met and proposed alternatives do not meet the criteria of 10 CFR 50.55(a)(3). The NRC authorizes relief requests pursuant to 10 CFR 50.55a(a)(3)(i) if the proposed alternatives would provide an acceptable level of quality and safety or under (3)(ii) if compliance with the specified requirements would result in hardship or unusual difficulties without a compensating increase in the level of safety.

Note 2: This column represents the status of the latest revision. Relief Request Status Options: Authorized – Approved for use in an NRC SER (See Note 1); Granted – Approved for use in an NRC SER (See Note 1); Authorized Conditionally – Approved for use in an NRC SER which imposes certain conditions; Granted Conditionally – Approved for use in an NRC SER which imposes certain conditions; Denied – Use denied in an NRC SER; Expired – Approval for relief has expired; Withdrawn – Relief has been withdrawn by the station; Not Required – The NRC has deemed the relief unnecessary in an SER or RAI; Cancelled – Relief has been cancelled by the station prior to issue; Submitted – Relief has been submitted to the NRC by the station and is awaiting approval.

Note 3: The revision listed is the latest revision of the subject relief request. The date this revision became effective is the date of the approving SER which is listed in the fourth column of the table. The date noted in the second column is the date of the ISI Program Plan revision when the relief request was incorporated into the document.

RELIEF REQUEST I4R-01
(Page 1 of 3)

COMPONENT IDENTIFICATION

Code Class:	1
Reference:	IWB-2500 Table IWB-2500-1
Examination Category: B-D	
Item Number:	B3.100
Description:	Inspection of Standby Liquid Control Nozzle Inner Radius.
Component Number:	Unit 1: N10 Unit 2: N10

CODE REQUIREMENT

IWB-2500 states that components shall be examined and tested as specified in Table IWB-2500-1.

Table IWB-2500-1 requires a volumetric examination to be performed on the inner radius section of all reactor pressure vessel nozzles each inspection interval.

BASIS FOR RELIEF

Pursuant to 10 CFR 50.55a(g)(5)(iii), relief is requested on the basis that compliance with the specified Code requirement has been determined to be impractical.

The Standby Liquid Control (SBLC) nozzle, as shown in Figure I4R-01.1, is designed with an integral socket to which the boron injection piping is fillet welded. The SBLC nozzle is located near the bottom of the vessel in an area which is inaccessible for ultrasonic examinations from the inside surface of the RPV. Therefore, ultrasonic examinations would need to be performed from the outside diameter of the RPV. As shown in Figure I4R-01.1, the ultrasonic beam would need to travel through the full thickness of the vessel into a complex cladding/socket configuration. These geometric and material reflectors inherent in the design prevent a meaningful examination from being performed on the inner radius of the SBLC nozzle.

In addition, the inner radius socket attaches to the piping which injects boron at locations far removed from the nozzle. Therefore, the SBLC nozzle inner radius is not subjected to turbulent mixing conditions that are a concern at other nozzles.

PROPOSED ALTERNATE EXAMINATION

As an alternate examination, QCNPS will perform a VT-2 visual examination of the subject nozzles each refueling outage in conjunction with the Class 1 System Leakage Test.

RELIEF REQUEST I4R-01
(Page 2 of 3)

APPLICABLE TIME PERIOD

Relief is requested for the fourth ten-year inspection interval of the Inservice Inspection Program for QCNPS Units 1 and 2.

RELIEF REQUEST NUMBER: I4R-01
(Page 3 of 3)

FIGURE I4R-01.1

2 INCH STANDBY LIQUID CONTROL NOZZLE

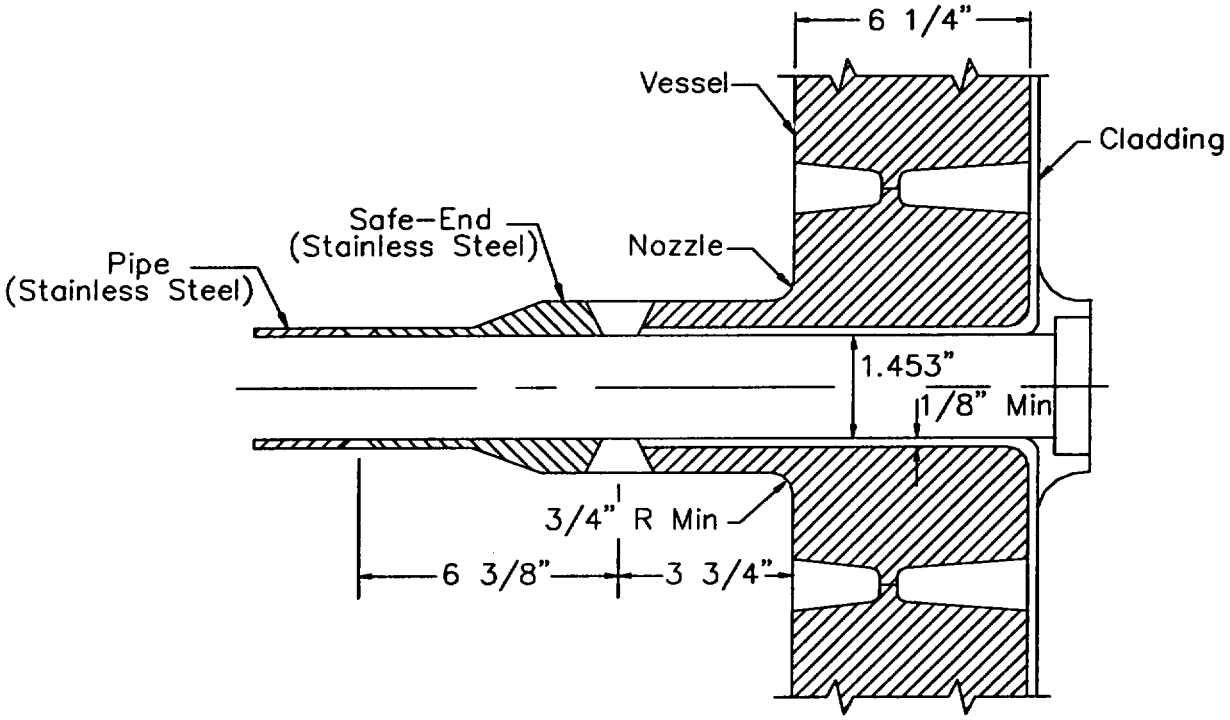

RELIEF REQUEST NUMBER: I4R-02

(Page 1 of 5)

COMPONENT IDENTIFICATION

Code Class:	1 and 2
Examination Category:	B-F, B-J, C-F-1, and C-F-2
Item Number:	B5.10, B5.20, B9.11, B9.21, B9.31, B9.32, B9.40, C5.11, C5.51, C5.70, and C5.81
Description:	Alternate Risk-Informed Selection and Examination Criteria for Category B-F, B-J, C-F-1, and C-F-2 Pressure Retaining Piping Welds
Component Number:	Pressure Retaining Piping
Reference:	1) Electric Power Research Institute (EPRI) Topical Report (TR) 112657 Rev. B-A, "Revised Risk-Informed Inservice Inspection Evaluation Procedure" 2) W. H. Bateman (NRC) to G. L. Vine (EPRI) letter dated October 28, 1999 transmitting "Safety Evaluation Report Related to EPRI Risk-Informed Inservice Inspection Evaluation Procedure (EPRI TR-112657, Revision B, July 1999)" 3) Initial Risk-Informed Inservice Inspection Evaluation – Quad Cities Nuclear Power Station Units 1 and 2 (Dated August 2000) 4) American Society of Mechanical Engineers (ASME) Code Case N-578-1, "Risk-Informed Requirements for Class 1, 2, or 3 Piping, Method B" 5) A. J. Mendiola (NRC) to O. D. Kingsley (Exelon) letter dated February 5, 2002 transmitting "Safety Evaluation of Third Interval Risk-Informed Inservice Inspection Program Relief Request"

CODE REQUIREMENT

Table IWB-2500-1, Examination Category B-F, requires volumetric and/or surface examinations on all welds for Items B5.10 and B5.20.

Table IWB-2500-1, Examination Category B-J, requires volumetric and/or surface examinations on a sample of welds for Items B9.11, B9.21, B9.31, B9.32, and B9.40. The weld population selected for inspection includes the following:

RELIEF REQUEST NUMBER: I4R-02
(Page 2 of 5)

CODE REQUIREMENT (Continued)

1. All terminal ends in each pipe or branch run connected to vessels.

2. All terminal ends and joints in each pipe or branch run connected to other components where the stress levels exceed either of the following limits under loads associated with specific seismic events and operational conditions:

   a. primary plus secondary stress intensity range of $2.4S_m$ for ferritic steel and austenitic steel.
   b. cumulative usage factor U of 0.4.

3. All dissimilar metal welds not covered under Category B-F.

4. Additional piping welds so that the total number of circumferential butt welds, branch connections, or socket welds selected for examination equals 25% of the circumferential butt welds, branch connection, or socket welds in the reactor coolant piping system. This total does not include welds excluded by IWB-1220.

Table IWC-2500-1, Examination Categories C-F-1 and C-F-2 require volumetric and/or surface examinations on a sample of welds for Items C5.11, C5.51, C5.70, and C5.81. The weld population selected for inspection includes the following:

1. Welds selected for examination shall include 7.5%, but not less than 28 welds, of all dissimilar metal, austenitic stainless steel and high alloy welds (Category C-F-1) or of all carbon and low alloy steel welds (Category C-F-2) not exempted by IWC-1220. (Some welds not exempted by IWC-1220 are not required to be nondestructively examined per Examination Categories C-F-1 and C-F-2. These welds, however, shall be included in the total weld count to which the 7.5% sampling rate is applied.) The examinations shall be distributed as follows:

   a. the examinations shall be distributed among the Class 2 systems prorated, to the degree practicable, on the number of nonexempt dissimilar metal, austenitic stainless steel and high alloy welds (Category C-F-1) or carbon and low alloy welds (Category C-F-2) in each system;
   b. within a system, the examinations shall be distributed among terminal ends, dissimilar metal welds, and structural discontinuities prorated, to the degree practicable, on the number of nonexempt terminal ends, dissimilar metal welds, and structural discontinuities in the system; and
   c. within each system, examinations shall be distributed between line sizes prorated to the degree practicable.

RELIEF REQUEST NUMBER: I4R-02
(Page 3 of 5)

BASIS FOR RELIEF

Pursuant to 10 CFR 50.55a(a)(3)(i), relief is requested on the basis that the proposed alternative utilizing Reference 1 along with two enhancements from Reference 4 will provide an acceptable level of quality and safety.

As stated in "Safety Evaluation Report Related to EPRI Risk-Informed Inservice Inspection Evaluation Procedure (EPRI TR-112657, Revision B, July 1999)" (Reference 2):

> "The staff concludes that the proposed RI-ISI program as described in EPRI TR-112657, Revision B, is a sound technical approach and will provide an acceptable level of quality and safety pursuant to 10 CFR 50.55a for the proposed alternative to the piping ISI requirements with regard to the number of locations, locations of inspections, and methods of inspection."

The initial QCNPS RISI Program was submitted during the Third Period of the Third Interval for both Units 1 and 2. This initial RISI program was developed in accordance with EPRI TR-112657, Revision B-A, as supplemented by Code Case N-578-1. The program was approved for use by the NRC via Safety Evaluation as transmitted to Exelon on February 5, 2002 (Reference 5).

The transition from the 1989 Edition to the 1995 Edition with the 1996 Addenda of ASME Section XI for QCNPS's Fourth Interval does not impact the currently approved Risk-Informed ISI evaluation process used in the Third Interval, and the requirements of the new Code edition/addenda will be implemented as detailed in the QCNPS ISI Program Plan.

The Risk Impact Assessment completed as part of the original baseline RISI Program was an implementation/transition check on the initial impact of converting from a traditional ASME Section XI program to the new RISI methodology. For the Fourth Interval ISI update, there is no transition occurring between two different methodologies, but rather, the currently approved RISI methodology and evaluation will be maintained for the new interval. As such, the initial screening of the risk impact assessment is not a part of the living program process and is not required to be continually updated.

The actual evaluation and ranking procedure including the Consequence Evaluation and Degradation Mechanism Assessment processes of the currently approved (Reference 5) RISI Program remain unchanged and are continually applied to maintain the Risk Categorization and Element Selection methods of EPRI TR-112657, Revision B-A. These portions of the RISI Program are reevaluated as major revisions of the site PRA occur and modifications to plant configuration are made. The Consequence Evaluation, Degradation Mechanism Assessment, Risk Ranking, and Element Selection steps define the living program process applicable to the RISI Program.

RELIEF REQUEST NUMBER: I4R-02
(Page 4 of 5)

PROPOSED ALTERNATE PROVISIONS

The proposed alternative originally implemented in the "Risk Informed Inservice Inspection Plan, Quad Cities Units 1 and 2" (Reference 3), along with the two enhancements noted below, provide an acceptable level of quality and safety as required by 10 CFR 50.55a(a)(3)(i). This original program along with these same two enhancements is currently approved for QCNPS's Third Inspection Interval as documented in Reference 5.

The Fourth Interval RISI Program will be a continuation of the current application and will continue to be a living program as described in the Basis For Relief above. No changes to the evaluation methodology as currently implemented under EPRI TR-112657, Revision B-A, are required as part of this interval update. The following two enhancements will continue to be implemented.

> In lieu of the evaluation and sample expansion requirements in Section 3.6.6.2, "RI-ISI Selected Examinations" of EPRI TR-112657, QCNPS will utilize the requirements of Subarticle -2430, "Additional Examinations" contained in Code Case N-578-1 (Reference 4). The alternative criteria for additional examinations contained in Code Case N-578-1 provides a more refined methodology for implementing necessary additional examinations.
>
> To supplement the requirements listed in Table 4-1, "Summary of Degradation-Specific Inspection Requirements and Examination Methods" of EPRI TR-112657, QCNPS will utilize the provisions listed in Table 1, Examination Category R-A, "Risk-Informed Piping Examinations" contained in Code Case N-578-1 (Reference 4). To implement Note 10 of this table, paragraphs and figures from the 1995 Edition with the 1996 Addenda of ASME Section XI (QCNPS's code of record for the Fourth Interval) will be utilized which parallel those referenced in the Code Case for the 1989 Edition. Table 1 of Code Case N-578-1 will be used as it provides a detailed breakdown for examination method and categorization of parts to be examined.

The QCNPS RISI Program, as developed in accordance with EPRI TR-112657, Rev. B-A (Reference 1), requires that 25% of the elements that are categorized as "High" risk (i.e., Risk Category 1, 2, and 3) and 10% of the elements that are categorized as "Medium" risk (i.e., Risk Categories 4 and 5) be selected for inspection. For this application, the guidance for the examination volume for a given degradation mechanism is provided by the EPRI TR-112657 while the guidance for the examination method and categorization of parts to be examined are provided by the EPRI TR-112657 as supplemented by Code Case N-578-1.

RELIEF REQUEST NUMBER: I4R-02
(Page 5 of 5)

PROPOSED ALTERNATE PROVISIONS (Continued)

In addition to this risk-informed evaluation, selection, and examination procedure, all ASME Section XI piping components, regardless of risk classification, will continue to receive Code required pressure testing as part of the current ASME Section XI program. VT-2 visual examinations are scheduled in accordance with the QCNPS pressure testing program, which remains unaffected by the RISI program.

APPLICABLE TIME PERIOD

Relief is requested for the fourth ten-year inspection interval of the Inservice Inspection Program for QCNPS Units 1 and 2.

RELIEF REQUEST NUMBER: I4R-03
(Page 1 of 3)

COMPONENT IDENTIFICATION

Code Class:	All
Reference:	ASME Section XI, Appendix VII, Subsubarticle VII-4240, "Annual Training"
Examination Category:	All categories for components subject to Ultrasonic Examination
Item Number:	All item numbers for components subject to Ultrasonic Examination
Description:	Alternative Requirements to ASME Section XI, Appendix VII, Subsubarticle VII-240, "Annual Training"
Component Number:	All Components Subject to Ultrasonic Examination

CODE REQUIREMENT

10 CFR 50.55a, "Codes and Standards," Paragraph (b)(2) incorporates by reference, the 1995 Edition and Addenda through 1996 of Section XI of the American Society of Mechanical Engineers (ASME) Boiler and Pressure Vessel Code for use in preparing inservice inspection programs. Subsubarticle VII-4240, "Annual Training," of ASME Section XI, 1995 Edition with the 1996 Addenda, Appendix VII, requires a minimum of 10 hours annual training.

10 CFR 50.55a(b)(2)(xiv), "Appendix VIII personnel qualification," requires that all personnel qualified to perform ultrasonic examinations in accordance with ASME Section XI, Appendix VIII, shall receive 8 hours of annual hands-on training on specimens that contain cracks. This training must be completed no earlier than 6 months prior to performing ultrasonic examinations at a licensee's facility.

BASIS FOR RELIEF

Pursuant to 10 CFR 50.55a(a)(3)(i), relief is requested from the training provision of Subsubarticle VII-4240 of ASME Section XI, 1995 Edition with the 1996 Addenda, Appendix VII, that requires a minimum of 10 hours annual training. The basis of the relief request is that the proposed alternative would provide an acceptable level of quality and safety.

On September 22, 1999, the NRC published a final rule in the Federal Register (64 FR 51370) to amend 10 CFR 50.55a(b)(2), to incorporate by reference the 1995 Edition and addenda through the 1996 Addenda, of ASME Section XI. The change included the requirement to have a minimum of 10 hours of annual training contained in Subsubarticle VII-4240 of ASME Section XI.

RELIEF REQUEST NUMBER: I4R-03
(Page 2 of 3)

BASIS FOR RELIEF (Continued)

Additionally, the September 22, 1999, Federal Register notice amended 10 CFR 50.55a(b)(2)(xiv). The amended 10 CFR 50.55a(b)(2)(xiv) requires that all personnel qualified to perform ultrasonic examinations in accordance with Appendix VIII shall receive 8 hours of annual hands-on training on specimens that contain cracks. This training must be taken no earlier than 6 months prior to performing examinations at a licensee's facility. Paragraph 2.4.1.1.1 in the Federal Register notice contained the following statement which includes a discussion of the Electric Power Research Institute (EPRI) Performance Demonstration Initiative (PDI) program.

"The NRC had determined that this requirement (i.e., Subsubarticle VII-4240) was inadequate for two reasons. The first reason was that the training does not require laboratory work and examination of flawed specimens. Signals can be difficult to interpret and, as detailed in the regulatory analysis for this rulemaking, experience and studies indicate that the examiner must practice on a frequent basis to maintain the capability for proper interpretation. The second reason is related to the length of training and its frequency. Studies have shown that an examiner's capability begins to diminish within approximately 6 months if skills are not maintained. Thus, the NRC had determined that 10 hours of annual training is not sufficient practice to maintain skills, and that an examiner must practice on a more frequent basis to maintain proper skill level... The PDI program has adopted a requirement for 8 hours of training, but it is required to be hands-on practice. In addition, the training must be taken no earlier than 6 months prior to performing examinations at a licensee's facility. PDI believes that 8 hours will be acceptable relative to an examiner's abilities in this highly specialized skill area because personnel can gain knowledge of new developments, material failure modes, and other pertinent technical topics through other means. Thus, the NRC has decided to adopt in the Final Rule the PDI position on this matter. These changes are reflected in 10 CFR 50.55a(b)(2)(xiv) of the final rule."

Implementation of the training requirements contained in Subsubarticle VII-4240 of ASME Section XI, 1995 Edition with the 1996 Addenda, Appendix VII and 10 CFR 50.55a(b)(2)(xiv) will result in redundant training programs. The approval of this Relief Request, to qualify our personnel to perform ultrasonic examinations in accordance with 10 CFR 50.55a(b)(2)(xiv), will simplify record keeping, satisfy the need to maintain skills, and provide an acceptable level of quality and safety.

RELIEF REQUEST NUMBER: I4R-03
(Page 3 of 3)

PROPOSED ALTERNATIVE PROVISIONS

Annual ultrasonic training shall be conducted in accordance with 10 CFR 50.55a(b)(2)(xiv) in lieu of Subsubarticle VII-4240 of ASME Section XI, 1995 Edition with the 1996 Addenda, Appendix VII. The annual ultrasonic training shall require that all personnel qualified for performing ultrasonic examinations in accordance with ASME Section XI, Appendix VIII, shall receive 8 hours of annual hands-on training on specimens that contain cracks. This training must be completed no earlier than 6 months prior to performing ultrasonic examinations at a licensee's facility.

APPLICABLE TIME PERIOD

Relief is requested for the fourth ten-year inspection interval of the Inservice Inspection Program for QCNPS Units 1 and 2.

RELIEF REQUEST NUMBER: I4R-04
(Page 1 of 2)

COMPONENT IDENTIFICATION

Code Class:	1
Reference:	ASME Section XI, Table IWB-2500-1 ASME Section XI, Appendix VIII, Supplement 4, Subparagraph 3.2(c)
Examination Category:	B-A
Item Number:	B1.10, B1.11, B1.12, B1.20, B1.21, B1.22, B1.50, B1.51
Description:	Alternative Requirements to Appendix VIII, Supplement 4, "Qualification Requirements for the Clad/Base Metal Interface of Reactor Pressure Vessel"
Component Numbers:	All Components Subject to Ultrasonic Examination

CODE REQUIREMENT

10 CFR 50.55a(b)(2) incorporates by reference, the 1995 Edition with the 1996 Addenda of ASME Section XI for use in preparing inservice inspection programs.

Subparagraph 3.2(c) of ASME Section XI, Appendix VIII, Supplement 4, requires that the ultrasonic testing (UT) performance demonstration results be plotted on a two dimensional plot with the measured depth plotted along the ordinate axis and the true depth plotted along the abscissa axis. For qualification, the plot must satisfy the statistical parameters identified in Subparagraph 3.2(c).

BASIS FOR RELIEF

Pursuant to 10 CFR 50.55a(a)(3)(i), relief is requested from the statistical parameters identified in Subparagraph 3.2(c) of ASME Section XI, Appendix VIII, Supplement 4. The basis of the relief request is that the proposed alternatives would provide an acceptable level of quality and safety.

On September 22, 1999, the NRC published a final rule in the Federal Register (64 FR 51378) to amend 10 CFR 50.55a(b)(2), to incorporate by reference the 1995 Edition and addenda through the 1996 Addenda, of ASME Section XI. The change included the provisions of Subparagraph 3.2(a), 3.2(b) and 3.2(c) of ASME Section XI, 1995 Edition with the 1996 Addenda, Appendix VIII, Supplement 4.

RELIEF REQUEST NUMBER: I4R-04
(Page 2 of 2)

BASIS FOR RELIEF (Continued)

Additionally, the September 22, 1999, Federal Register amended 10 CFR 50.55a(b)(2)(xv)(C)(1). The amended 10 CFR 50.55a(b)(2)(xv)(C)(1), requires a depth sizing acceptance criterion of 0.15 inch Root Mean Square (RMS) to be used in lieu of the requirements of Subparagraph 3.2(a) and 3.2(b) of ASME Section XI, Appendix VIII, Supplement 4.

On March 26, 2001, the NRC published a correction to the September 22, 1999, final rule in the Federal Register (66 FR 16390). The NRC identified that an error had occurred in the published wording of 10 CFR 50.55a(b)(2)(xv)(C)(1). The corrected 10 CFR 50.55a(b)(2)(xv)(C)(1), requires a depth sizing acceptance criterion of 0.15 inch Root Mean Square (RMS) to be used in lieu of the requirements of Subparagraph 3.2(a) and a length sizing requirement of 0.75 inch RMS to be used in lieu of the requirements 3.2(b) of ASME Section XI, Appendix VIII, Supplement 4.

The statistical parameters to be used in flaw sizing specified in Subparagraph 3.2(c) of ASME Section XI, 1995 Edition with the 1996 Addenda, Appendix VIII, Supplement 4, rely upon the depth sizing acceptance criteria used in Subparagraph 3.2(a) and the length sizing acceptance criteria used in Subparagraph 3.2(b). For Supplement 4 UT performance demonstrations, the linear regression line of the data required by Subparagraph 3.2(c) is not applicable because the performance demonstrations are performed on test specimens with flaws located on the inner 15% through-wall. Additionally, the Subparagraph 3.2(c) specified value for evaluating the mean deviation of flaw depth is not restrictive enough for evaluating flaw depths within the inner 15% of wall thickness. We propose to use the 10 CFR 50.55a(b)(2)(xv)(C)(1) RMS calculations of Subparagraph 3.2(a), which utilizes an RMS value of 0.15 inch depth, and the RMS calculations of Subparagraph 3.2(b), which utilizes an RMS value of 0.75 inch length, in lieu of the statistical parameters of 3.2(c).

PROPOSED ALTERNATIVE PROVISIONS

The RMS calculations of Subparagraph 3.2(a) of ASME Section XI, Appendix VIII, Supplement 4, which utilize an RMS value of 0.15 depth and the RMS calculations of Subparagraph 3.2(b), which utilizes an RMS value of 0.75 length shall be used in lieu of the statistical parameters of Subparagraph 3.2(c) of ASME Section XI, Appendix VIII, Supplement 4.

APPLICABLE TIME PERIOD

Relief is requested for the fourth ten-year inspection interval of the Inservice Inspection Program for QCNPS Units 1 and 2.

RELIEF REQUEST NUMBER: I4R-05
(Page 1 of 5)

COMPONENT IDENTIFICATION

Code Class:	2
Reference:	Table IWC-2500-1
Examination Category: C-H	
Description:	Exemption From Pressure Testing Reactor Pressure Vessel Head Flange Seal Leak Detection System.
Component Number:	Flange Seal Leak Detection Line Pressure Retaining Components.

CODE REQUIREMENTS

Table IWC-2500-1 requires a Visual VT-2 examination to be performed during a system leakage test.

BASIS FOR RELIEF

Pursuant to 10 CFR 50.55a(a)(3)(i), relief is requested on the basis that the proposed alternatives provide an acceptable level of quality and safety.

The Reactor Pressure Vessel Head Flange Leak Detection Line is separated from the reactor pressure boundary by one passive membrane, a silver plated O-ring located on the vessel flange. A second O-ring is located on the opposite side of the tap in the vessel flange (See Figure I4R-05.2). This line is required during plant operation in order to indicate failure of the inner flange seal O-ring. Failure of the O-ring would result in the annunciation of a High Level Alarm in the control room. On this annunciation, control room operators would quantify the leakage rate from the O-ring and then isolate the leak detection line from the drywell sump by closing the AO 1(2)-220-51 valve (see Figure I4R-05.1). This action is taken in order to prevent steam cutting of the O-ring and the vessel flange. Failure of the inner O-ring is the only condition under which this line is pressurized.

The configuration of this system precludes manual testing while the vessel head is removed because the odd configuration of the vessel tap (See I4R-05.2), combined with the small size of the tap and the high test pressure requirement (1000 psig minimum), prevents the tap in the flange from being temporarily plugged. The opening in the flange is only 3/16 of an inch in diameter and is smooth walled making a high pressure temporary seal very difficult. Failure of this seal could possibly cause ejection of the device used for plugging into the vessel.

RELIEF REQUEST NUMBER: I4R-05
(Page 2 of 5)

BASIS FOR RELIEF (Continued)

A pneumatic test performed with the head installed is precluded due to the configuration of the top head. The top head of the vessel contains two grooves that hold the O-rings. The O-rings are held in place by a series of retainer clips spaced 15° apart. The retainer clips are contained in a recessed cavity in the top head (see Figure I4R-05.3). If a pressure test was performed with the head on, the inner O-ring would be pressurized in a direction opposite to what it would see in normal operation. This test pressure would result in a net inward force on the O-ring that would tend to push it into the recessed cavity that houses the retainer clips. The O-ring material is only .050" thick with a silver plating thickness of .004" to .006" and could very likely be damaged by this deformation into the recessed areas on the top head.

In addition to the problems associated with the O-ring design that preclude this testing it is also questionable whether a pneumatic test is appropriate for this line. Although the line will initially contain steam if the inner O-ring leaks, the system actually detects leakage rate by measuring the level of condensate in a collection chamber. This would make the system medium water at the level switch. Finally, the use of a pneumatic test performed at a minimum of 1000 psig would represent an unnecessary risk in safety for the inspectors and test engineers in the unlikely event of a test failure, due to the large amount of stored energy contained in air pressurized to 1000 psig.

System leakage testing of this line is precluded because the line will only be pressurized in the event of a failure of the inner O-ring. It is extremely impractical to purposely fail the inner O-ring in order to perform a test.

Based on the above, QCNPS requests relief from the ASME Section XI requirements for system leakage testing of the Reactor Pressure Vessel Head Flange Seal Leak Detection System.

PROPOSED ALTERNATE EXAMINATION

A VT-2 visual examination will be performed on the line during vessel flood-up during a refueling outage. The static head developed due to the water above the vessel flange during flood-up will allow for the detection of any gross indications in the line. This examination will be performed with the frequency specified by Table IWC-2500-1 for a System Leakage Test (once each inspection period).

APPLICABLE TIME PERIOD

Relief is requested for the fourth ten-year inspection interval of the Inservice Inspection Program for QCNPS Units 1 and 2.

RELIEF REQUEST NUMBER: I4R-05
(Page 3 of 5)

FIGURE I4R-05.1

HEAD FLANGE SEAL LEAK DETECTION SCHEMATIC

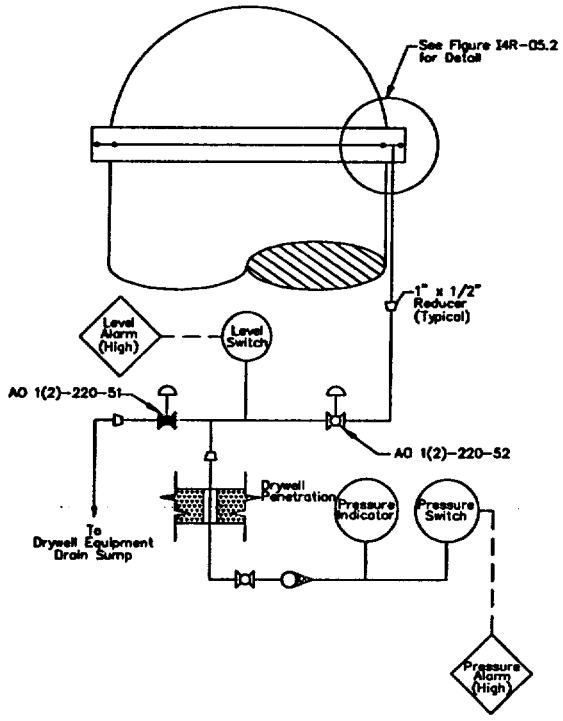

RELIEF REQUEST NUMBER: I4R-05
(Page 4 of 5)

FIGURE I4R-05.2

FLANGE SEAL LEAK DETECTION LINE DETAIL

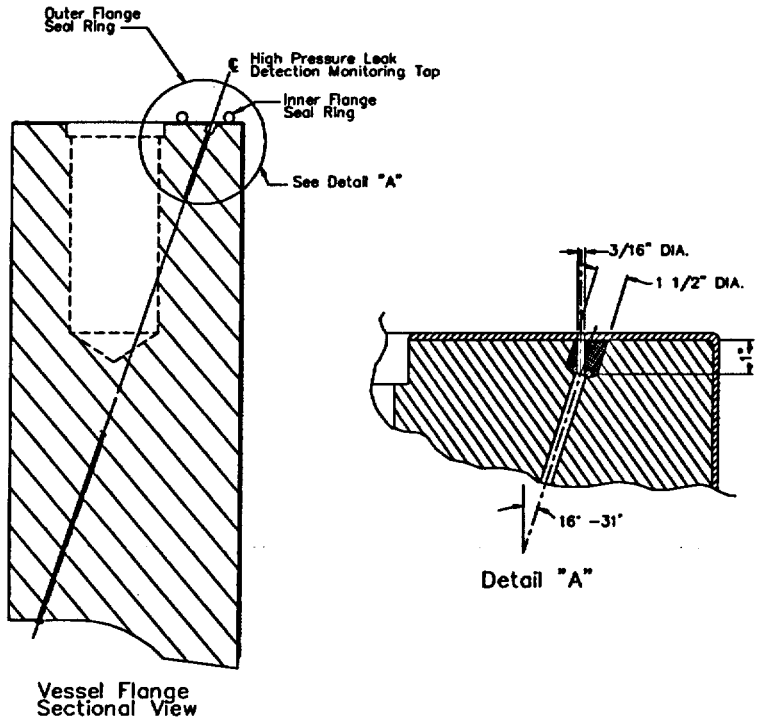

RELIEF REQUEST NUMBER: I4R-05
(Page 5 of 5)

FIGURE I4R-05.3

O-RING CONFIGURATION

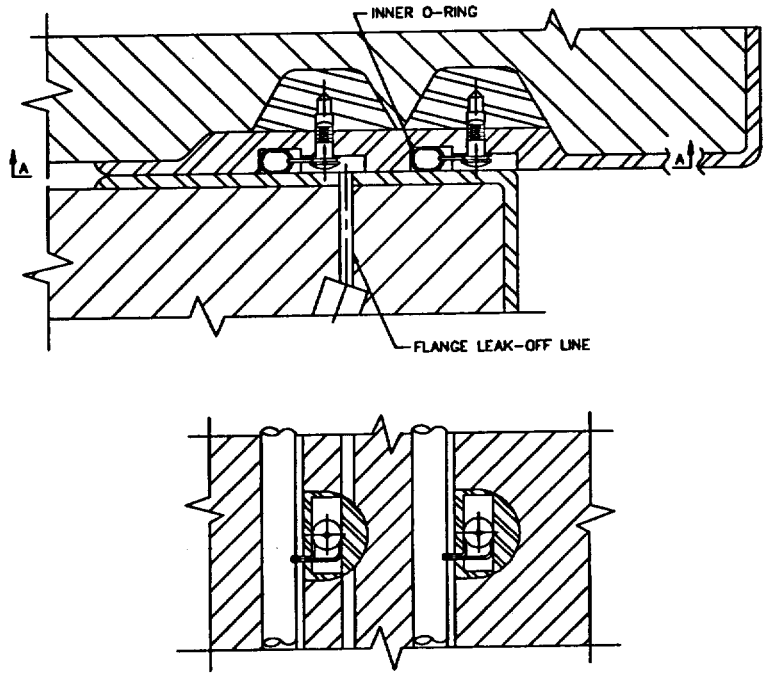

RELIEF REQUEST NUMBER: I4R-06
(Page 1 of 2)

COMPONENT IDENTIFICATION

Code Class:	2
References:	Table IWC-2500-1
Examination Category:	C-H
Item Number:	C7.10, C7.30, C7.50, C7.70
Description:	Continuous Pressure Monitoring of the Control Rod Drive (CRD) System Accumulators.
Component Number:	CRD Accumulators and associate piping

CODE REQUIREMENT FROM WHICH RELIEF IS REQUESTED

Table IWC-2500-1 requires a Visual VT-2 examination to be performed during a system leakage test.

BASIS FOR RELIEF

Pursuant to 10 CFR 50.55a(a)(3)(i), relief is requested on the basis that the proposed alternatives provide an acceptable level of quality and safety.

As required by QCNPS Technical Specifications, the CRD System Accumulator pressure must be greater than or equal to 940 psig to be considered operable. The accumulator pressure is continuously monitored by system instrumentation. Since the accumulators are isolated from the source of make up nitrogen, the continuous monitoring of the CRD accumulators functions as a pressure decay type test. Should accumulator pressure fall below 1000 psig, an alarm is received in the control room. The pressure drop for the associated accumulator is then recorded, and the accumulator is recharged in accordance with QCNPS procedures. If an accumulator requires charging more than twice in a thirty day period, then a leak check is performed to determine the cause of the pressure loss. When leakage is detected, corrective actions are taken to repair the leaking component as required by QCNPS procedures.

Since monitoring the nitrogen side of the accumulators is continuous, any leakage from the accumulator would be detected by normal system instrumentation. An additional Visual VT-2 examination performed once per inspection period would not provide an increase in safety, system reliability, or structural integrity. In addition, performance of a Visual VT-2 would require applying a leak detection solution to 177 accumulators per unit resulting in additional radiation exposure without any added benefit in safety. This inspection would not be consistent with As Low As Reasonably Achievable (ALARA) practices.

RELIEF REQUEST NUMBER: I4R-06
(Page 2 of 2)

BASIS FOR RELIEF (Continued)

Relief is requested from the Visual VT-2 examination requirements specified in Table IWC-2500-1 for the nitrogen side of the CRD System Accumulators on the basis that QCNPS Technical Specification Surveillance requirements exceed the code requirement for a Visual VT-2 Examination.

PROPOSED ALTERNATE EXAMINATIONS

As an alternate to the Visual VT-2 examination requirements of Table IWC-2500-1, QCNPS will perform continuous pressure decay monitoring in conjunction with Technical Specifications for the nitrogen side of the CRD Accumulators including attached piping.

APPLICABLE TIME PERIOD

Relief is requested for the fourth ten-year inspection interval of the Inservice Inspection Program for QCNPS Units 1 and 2.

RELIEF REQUEST NUMBER: I4R-07
(Page 1 of 3)

COMPONENT IDENTIFICATION

Code Class:	1, 2, and 3
References:	IWA-5250(a)(2)
Examination Category:	N/A
Item Number:	N/A
Description:	Alternative Rules for Corrective Measures if Leakage Occurs at Bolted Connections
Component Number:	All Pressure Retaining Bolted Connections

CODE REQUIREMENT FOR WHICH RELIEF IS REQUESTED

IWA-5250(a)(2) states that if leakage occurs at a bolted connection, one of the bolts shall be removed, VT-3 examined, and evaluated in accordance with IWA-3100. The bolt selected shall be the one closest to the source of leakage. When the removed bolt has evidence of degradation, all remaining bolting in the connection shall be removed, VT-3 examined, and evaluated in accordance with IWA-3100.

BASIS FOR RELIEF

Pursuant to 10 CFR 50.55a(a)(3)(i), relief is requested on the basis that the proposed alternative would provide an acceptable level of quality and safety.

Removal of pressure retaining bolting at mechanical connections for VT-3 visual examination and subsequent evaluation in locations where leakage has been identified is not always the most prudent course of action to determine condition of the bolting and/or the root cause of the leak. The requirement to remove, examine and evaluate bolting in this situation does not allow consideration of other factors which may indicate the condition of mechanical joint bolting. Other factors which should be considered in an evaluation of bolting condition when leakage has been identified at a mechanical joint include, but should not be limited to:

- Bolting materials
- Corrosiveness of process fluid
- Service age of joint bolting materials
- Leakage location
- Leakage history at connection
- Visual evidence of corrosion at connection (connection assembled)
- Plant / Industry studies of similar bolting materials in a similar environment
- Condition and leakage history of adjacent components

RELIEF REQUEST NUMBER: I4R-07
(Page 2 of 3)

BASIS FOR RELIEF (Continued)

An example at QCNPS is the complete replacement of bolting materials (e.g., studs, bolts, nuts, washers, etc.) at mechanical joints during plant outages. In some cases, when the associated system process piping is pressurized during plant start-up, leakage is identified at these joints. The cause of this leakage is often due to thermal expansion of the piping and bolting materials at the joint and subsequent process fluid seepage at the joint gasket. In most of these cases, proper re-torquing of the joint bolting stops the leakage. Removal of any of the joint bolting to evaluate for corrosion would be unwarranted in this situation. ASME Section XI Code Interpretation XI-1-92-01 has recognized that this situation exists, and has clarified that the requirements of IWA-5250(a)(2) do not apply.

PROPOSED ALTERNATE PROVISIONS

QCNPS proposes the following alternative, consistent with the methodology of Code Case N-566-2, to the requirements of IWA-5250(a)(2), which will provide an equivalent level of quality and safety when evaluating leakage and bolting material condition at Class 1, 2, and 3 bolted connections.

As an alternative to the to the requirements of Subparagraph IWA-5250(a)(2), one of the following requirements will be met for leakage at bolted connections:

(a) The leakage will be stopped, and the bolting and component material will be reviewed for joint integrity as described in (c) below.

(b) If the leakage is not stopped, the QCNPS will evaluate the structural integrity and consequences of continuing operation, and the effect on the system operability of continued leakage. This engineering evaluation will include the considerations listed in (c) below.

(c) The evaluation of (a) and (b) above is to determine the susceptibility of the bolting to corrosion and failure. This evaluation will include the following:

(1) the number and service age of the bolts;
(2) bolt and component material;
(3) corrosiveness of process fluid;
(4) leak location and system function;
(5) leakage history at the connection or other system components;
(6) visual evidence of corrosion at the assembled connection.

RELIEF REQUEST NUMBER: I4R-07
(Page 3 of 3)

PROPOSED ALTERNATE PROVISIONS (Continued)

If any of the above parameters indicates a need for further examination, the corrective action will be taken in accordance with IWA-5250(a)(2).

APPLICABLE TIME PERIOD

Relief is requested for the fourth ten-year inspection interval of the Inservice Inspection Program for QCNPS Units 1 and 2.

RELIEF REQUEST: I4R-08
(Page 1 of 2)

COMPONENT IDENTIFICATION

Code Class:	2 and 3
Reference:	IWC-3122.3
	IWC-3132.3
	IWC-3600
	IWD-3000
Examination Category:	N/A
Item Number:	N/A
Description:	Evaluation Criteria for Temporary Acceptance of Flaws
Component Number:	Moderate Energy Class 2 and 3 Piping

CODE REQUIREMENTS

IWC-3122.3 states that a component whose volumetric or surface examination detects flaws may be acceptable for continued service without a repair/replacement activity if an analytical evaluation is performed in accordance with IWC-3600. Similar requirements for visual examinations are contained in IWC-3132.3.

In the 1995 Edition with the 1996 Addenda of ASME Section XI, IWC-3600, Analytical Evaluation of Flaws, and IWD-3000, Acceptance Standards, are in the course of preparation and state that the requirements of IWB may be used.

BASIS FOR RELIEF

Pursuant to 10 CFR 50.55a(a)(3)(i), relief is requested on the basis that the proposed alternatives would provide an acceptable level of quality and safety.

ASME Section XI Code Case N-513 is conditionally approved for use in Revision 13 of Regulatory Guide 1.147; however, this Case is not applicable to the 1996 Addenda which is QCNPS's code of record for the Fourth Inspection Interval. Code Case N-513-1 has since been issued in Supplement 11 of the 1998 Edition and is currently applicable through the 2001 Edition. This revision of the Code Case is not yet approved for use by the NRC.

Code Case N-513-1 revises the base case to expand the temporary acceptance methodology from Class 3 moderate energy piping to Class 2 and 3 moderate energy piping. Both cases provide requirements which may be followed for temporary acceptance of flaws in ASME Section III, ANSI B31.1, and ANSI B31.7 piping designated as Class 2 or 3. This acceptance is limited to moderate energy piping defined as piping whose maximum operating temperature does not exceed 200°F and whose maximum operating pressure does not exceed 275 psig. The provisions of the case demonstrate the integrity of the item containing the flaw for a limited period of time until appropriate repair/replacement or additional examination activities can be performed.

RELIEF REQUEST: I4R-08
(Page 2 of 2)

PROPOSED ALTERNATE PROVISIONS

When using analytical evaluation as the method of acceptance for flaws in moderate energy Class 2 or 3 piping, QCNPS will follow the provisions of Code Case N-513-1 without performing a repair/replacement activity. This acceptance will be temporary and will remain in affect for a limited time, not exceeding the time to the next scheduled outage.

QCNPS may implement this method or one of the other methods contained in ASME Section XI to accept detected flaws; however, in no case will the temporary evaluation process be applied to

(a) components other than pipe or tube,
(b) leakage through a gasket,
(c) threaded connections with nonstructural seal welds for leakage prevention, or
(d) degraded socket welds.

When applying the methods of Code Case N-513-1, the specific safety factors contained in Paragraph 4.0 of the Case will be satisfied. These conditions are consistent with those contained in 10 CFR 50.55a(b)(2)(xiii) regarding the use of Code Case N-513.

APPLICABLE TIME PERIOD

Relief is requested for the fourth ten-year inspection interval of the Inservice Inspection Program for QCNPS Units 1 and 2.

8.0 RELIEF REQUESTS FROM ASME SECTION XI

This section contains relief requests written per 10 CFR 50.55a(a)(3)(i) for situations where alternatives to ASME Section XI requirements provide an acceptable level of quality and safety; per 10 CFR 50.55a(a)(3)(ii) for situations where compliance with ASME Section XI requirements results in a hardship or an unusual difficulty without a compensating increase in the level of quality and safety; and per 10 CFR 50.55a(g)(5)(iii) for situations where ASME Section XI requirements are considered impractical.

The following NRC guidance was utilized to determine the correct 10 CFR 50.55a Paragraph citing for QCNPS relief requests. 10 CFR 50.55a(a)(3)(i) and 10 CFR 50.55a(a)(3)(ii) provide alternatives to the requirements of ASME Section XI, while 10 CFR 50.55a(g)(5)(iii) recognizes situational impracticalities.

10 CFR 50.55a(a)(3)(i): Cited in relief requests when alternatives to the ASME Section XI requirements which provide an acceptable level of quality and safety are proposed. Examples are relief requests which propose alternative non-destructive examination (NDE) methods and/or examination frequency.

10 CFR 50.55a(a)(3)(ii): Cited in relief requests when compliance with the ASME Section XI requirements is deemed to be a hardship or unusual difficulty without a compensating increase in the level of quality and safety. Examples of hardship and/or unusual difficulty include, but are not limited to, excessive radiation exposure, disassembly of components solely to provide access for examinations, and development of sophisticated tooling that would result in only minimal increases in examination coverage.

10 CFR 50.55a(g)(5)(iii): Cited in relief requests when conformance with ASME Section XI requirements is deemed impractical. Examples of impractical requirements are situations where the component would have to be redesigned, or replaced to enable the required inspection to be performed.

An index for QCNPS relief requests is included in Table 8.0-1. The "I4R-XX" relief request is applicable to ISI and SPT.

TABLE 8.0-1
INSERVICE INSPECTION PROGRAM RELIEF REQUEST INDEX
Sheet 1 of 2

Relief Request	Revision Date[3]	Status[2]	(Program) Description/ Approval Summary[1]
I4R-01	0 1/17/03	Submitted	(ISI) Inspection of Standby Liquid Control nozzle inner radius. **Revision 0 Submitted.**
I4R-02	0 1/17/03	Submitted	(ISI) Alternate Risk-Informed Selection and Examination Criteria for Category B-F, B-J, C-F-1, and C-F-2 Pressure Retaining Piping Welds. **Revision 0 Submitted.**
I4R-03	0 1/17/03	Submitted	(ISI) Alternative Requirements to ASME Section XI, Appendix VII, Subsubarticle VII-240, "Annual Training." **Revision 0 Submitted.**
I4R-04	0 1/17/03	Submitted	(ISI) Alternative Requirements to Appendix VIII, Supplement 4, "Qualification Requirements for the Clad/Base Metal Interface of Reactor Pressure Vessel." **Revision 0 Submitted.**
I4R-05	0 1/17/03	Submitted	(SPT) Exemption from Pressure Testing Reactor Pressure Vessel Head Flange Seal Leak Detection System. **Revision 0 Submitted.**
I4R-06	0 1/17/03	Submitted	(SPT) Continuous Pressure Monitoring of the Control Rod Drive (CRD) System Accumulators. **Revision 0 Submitted.**
I4R-07	0 1/17/03	Submitted	(SPT) Alternative Rules for Corrective Measures if Leakage Occurs at Bolted Connections. **Revision 0 Submitted.**
I4R-08	0 1/17/03	Submitted	(ISI) Evaluation Criteria for Temporary Acceptance of Flaws. **Revision 0 Submitted.**

TABLE 8.0-1
INSERVICE INSPECTION PROGRAM RELIEF REQUEST INDEX
Sheet 2 of 2

Relief Request	Revision Date[3]	Status[2]	(Program) Description/ Approval Summary[1]
I4R-09	0 1/17/03	Submitted	(ISI) Pressure Retaining Welds in Piping, Subject to Appendix VIII, Supplement 11. **Revision 0 Submitted.**

Note 1: The NRC grants relief requests pursuant to 10 CFR 50.55a(g)(6)(i) when Code requirements cannot be met and proposed alternatives do not meet the criteria of 10 CFR 50.55(a)(3). The NRC authorizes relief requests pursuant to 10 CFR 50.55a(a)(3)(i) if the proposed alternatives would provide an acceptable level of quality and safety or under (3)(ii) if compliance with the specified requirements would result in hardship or unusual difficulties without a compensating increase in the level of safety.

Note 2: This column represents the status of the latest revision. Relief Request Status Options: Authorized – Approved for use in an NRC SER (See Note 1); Granted – Approved for use in an NRC SER (See Note 1); Authorized Conditionally – Approved for use in an NRC SER which imposes certain conditions; Granted Conditionally – Approved for use in an NRC SER which imposes certain conditions; Denied – Use denied in an NRC SER; Expired – Approval for relief has expired; Withdrawn – Relief has been withdrawn by the station; Not Required – The NRC has deemed the relief unnecessary in an SER or RAI; Cancelled – Relief has been cancelled by the station prior to issue; Submitted – Relief has been submitted to the NRC by the station and is awaiting approval.

Note 3: The revision listed is the latest revision of the subject relief request. The date this revision became effective is the date of the approving SER which is listed in the fourth column of the table. The date noted in the second column is the date of the ISI Program Plan revision when the relief request was incorporated into the document.

RELIEF REQUEST I4R-01
(Page 1 of 3)

COMPONENT IDENTIFICATION

Code Class:	1
Reference:	IWB-2500 Table IWB-2500-1
Examination Category: B-D	
Item Number:	B3.100
Description:	Inspection of Standby Liquid Control Nozzle Inner Radius.
Component Number:	Unit 1: N10 Unit 2: N10

CODE REQUIREMENT

IWB-2500 states that components shall be examined and tested as specified in Table IWB-2500-1.

Table IWB-2500-1 requires a volumetric examination to be performed on the inner radius section of all reactor pressure vessel nozzles each inspection interval.

BASIS FOR RELIEF

Pursuant to 10 CFR 50.55a(g)(5)(iii), relief is requested on the basis that compliance with the specified Code requirement has been determined to be impractical.

The Standby Liquid Control (SBLC) nozzle, as shown in Figure I4R-01.1, is designed with an integral socket to which the boron injection piping is fillet welded. The SBLC nozzle is located near the bottom of the vessel in an area which is inaccessible for ultrasonic examinations from the inside surface of the RPV. Therefore, ultrasonic examinations would need to be performed from the outside diameter of the RPV. As shown in Figure I4R-01.1, the ultrasonic beam would need to travel through the full thickness of the vessel into a complex cladding/socket configuration. These geometric and material reflectors inherent in the design prevent a meaningful examination from being performed on the inner radius of the SBLC nozzle.

In addition, the inner radius socket attaches to the piping which injects boron at locations far removed from the nozzle. Therefore, the SBLC nozzle inner radius is not subjected to turbulent mixing conditions that are a concern at other nozzles.

PROPOSED ALTERNATE EXAMINATION

As an alternate examination, QCNPS will perform a VT-2 visual examination of the subject nozzles each refueling outage in conjunction with the Class 1 System Leakage Test.

RELIEF REQUEST I4R-01
(Page 2 of 3)

APPLICABLE TIME PERIOD

Relief is requested for the fourth ten-year inspection interval of the Inservice Inspection Program for QCNPS Units 1 and 2.

RELIEF REQUEST NUMBER: I4R-01
(Page 3 of 3)

FIGURE I4R-01.1

2 INCH STANDBY LIQUID CONTROL NOZZLE

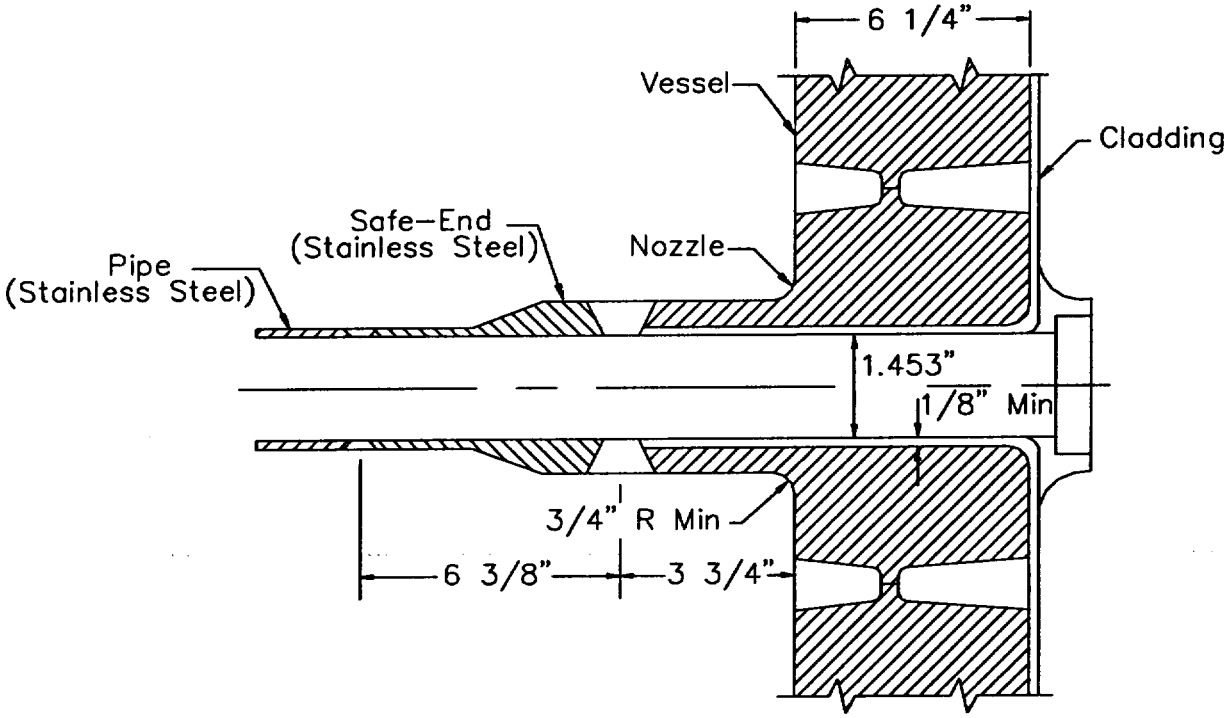

RELIEF REQUEST NUMBER: I4R-02

(Page 1 of 5)

COMPONENT IDENTIFICATION

Code Class:	1 and 2
Examination Category:	B-F, B-J, C-F-1, and C-F-2
Item Number:	B5.10, B5.20, B9.11, B9.21, B9.31, B9.32, B9.40, C5.11, C5.51, C5.70, and C5.81
Description:	Alternate Risk-Informed Selection and Examination Criteria for Category B-F, B-J, C-F-1, and C-F-2 Pressure Retaining Piping Welds
Component Number:	Pressure Retaining Piping
Reference:	1) Electric Power Research Institute (EPRI) Topical Report (TR) 112657 Rev. B-A, "Revised Risk-Informed Inservice Inspection Evaluation Procedure" 2) W. H. Bateman (NRC) to G. L. Vine (EPRI) letter dated October 28, 1999 transmitting "Safety Evaluation Report Related to EPRI Risk-Informed Inservice Inspection Evaluation Procedure (EPRI TR-112657, Revision B, July 1999)" 3) Initial Risk-Informed Inservice Inspection Evaluation – Quad Cities Nuclear Power Station Units 1 and 2 (Dated August 2000) 4) American Society of Mechanical Engineers (ASME) Code Case N-578-1, "Risk-Informed Requirements for Class 1, 2, or 3 Piping, Method B" 5) A. J. Mendiola (NRC) to O. D. Kingsley (Exelon) letter dated February 5, 2002 transmitting "Safety Evaluation of Third Interval Risk-Informed Inservice Inspection Program Relief Request"

CODE REQUIREMENT

Table IWB-2500-1, Examination Category B-F, requires volumetric and/or surface examinations on all welds for Items B5.10 and B5.20.

Table IWB-2500-1, Examination Category B-J, requires volumetric and/or surface examinations on a sample of welds for Items B9.11, B9.21, B9.31, B9.32, and B9.40. The weld population selected for inspection includes the following:

RELIEF REQUEST NUMBER: I4R-02
(Page 2 of 5)

CODE REQUIREMENT (Continued)

1. All terminal ends in each pipe or branch run connected to vessels.

2. All terminal ends and joints in each pipe or branch run connected to other components where the stress levels exceed either of the following limits under loads associated with specific seismic events and operational conditions:

   a. primary plus secondary stress intensity range of $2.4S_m$ for ferritic steel and austenitic steel.
   b. cumulative usage factor U of 0.4.

3. All dissimilar metal welds not covered under Category B-F.

4. Additional piping welds so that the total number of circumferential butt welds, branch connections, or socket welds selected for examination equals 25% of the circumferential butt welds, branch connection, or socket welds in the reactor coolant piping system. This total does not include welds excluded by IWB-1220.

Table IWC-2500-1, Examination Categories C-F-1 and C-F-2 require volumetric and/or surface examinations on a sample of welds for Items C5.11, C5.51, C5.70, and C5.81. The weld population selected for inspection includes the following:

1. Welds selected for examination shall include 7.5%, but not less than 28 welds, of all dissimilar metal, austenitic stainless steel and high alloy welds (Category C-F-1) or of all carbon and low alloy steel welds (Category C-F-2) not exempted by IWC-1220. (Some welds not exempted by IWC-1220 are not required to be nondestructively examined per Examination Categories C-F-1 and C-F-2. These welds, however, shall be included in the total weld count to which the 7.5% sampling rate is applied.) The examinations shall be distributed as follows:

   a. the examinations shall be distributed among the Class 2 systems prorated, to the degree practicable, on the number of nonexempt dissimilar metal, austenitic stainless steel and high alloy welds (Category C-F-1) or carbon and low alloy welds (Category C-F-2) in each system;
   b. within a system, the examinations shall be distributed among terminal ends, dissimilar metal welds, and structural discontinuities prorated, to the degree practicable, on the number of nonexempt terminal ends, dissimilar metal welds, and structural discontinuities in the system; and
   c. within each system, examinations shall be distributed between line sizes prorated to the degree practicable.

RELIEF REQUEST NUMBER: I4R-02
(Page 3 of 5)

BASIS FOR RELIEF

Pursuant to 10 CFR 50.55a(a)(3)(i), relief is requested on the basis that the proposed alternative utilizing Reference 1 along with two enhancements from Reference 4 will provide an acceptable level of quality and safety.

As stated in "Safety Evaluation Report Related to EPRI Risk-Informed Inservice Inspection Evaluation Procedure (EPRI TR-112657, Revision B, July 1999)" (Reference 2):

> "The staff concludes that the proposed RI-ISI program as described in EPRI TR-112657, Revision B, is a sound technical approach and will provide an acceptable level of quality and safety pursuant to 10 CFR 50.55a for the proposed alternative to the piping ISI requirements with regard to the number of locations, locations of inspections, and methods of inspection."

The initial QCNPS RISI Program was submitted during the Third Period of the Third Interval for both Units 1 and 2. This initial RISI program was developed in accordance with EPRI TR-112657, Revision B-A, as supplemented by Code Case N-578-1. The program was approved for use by the NRC via Safety Evaluation as transmitted to Exelon on February 5, 2002 (Reference 5).

The transition from the 1989 Edition to the 1995 Edition with the 1996 Addenda of ASME Section XI for QCNPS's Fourth Interval does not impact the currently approved Risk-Informed ISI evaluation process used in the Third Interval, and the requirements of the new Code edition/addenda will be implemented as detailed in the QCNPS ISI Program Plan.

The Risk Impact Assessment completed as part of the original baseline RISI Program was an implementation/transition check on the initial impact of converting from a traditional ASME Section XI program to the new RISI methodology. For the Fourth Interval ISI update, there is no transition occurring between two different methodologies, but rather, the currently approved RISI methodology and evaluation will be maintained for the new interval. As such, the initial screening of the risk impact assessment is not a part of the living program process and is not required to be continually updated.

The actual evaluation and ranking procedure including the Consequence Evaluation and Degradation Mechanism Assessment processes of the currently approved (Reference 5) RISI Program remain unchanged and are continually applied to maintain the Risk Categorization and Element Selection methods of EPRI TR-112657, Revision B-A. These portions of the RISI Program are reevaluated as major revisions of the site PRA occur and modifications to plant configuration are made. The Consequence Evaluation, Degradation Mechanism Assessment, Risk Ranking, and Element Selection steps define the living program process applicable to the RISI Program.

RELIEF REQUEST NUMBER: I4R-02
(Page 4 of 5)

PROPOSED ALTERNATE PROVISIONS

The proposed alternative originally implemented in the "Risk Informed Inservice Inspection Plan, Quad Cities Units 1 and 2" (Reference 3), along with the two enhancements noted below, provide an acceptable level of quality and safety as required by 10 CFR 50.55a(a)(3)(i). This original program along with these same two enhancements is currently approved for QCNPS's Third Inspection Interval as documented in Reference 5.

The Fourth Interval RISI Program will be a continuation of the current application and will continue to be a living program as described in the Basis For Relief above. No changes to the evaluation methodology as currently implemented under EPRI TR-112657, Revision B-A, are required as part of this interval update. The following two enhancements will continue to be implemented.

> In lieu of the evaluation and sample expansion requirements in Section 3.6.6.2, "RI-ISI Selected Examinations" of EPRI TR-112657, QCNPS will utilize the requirements of Subarticle -2430, "Additional Examinations" contained in Code Case N-578-1 (Reference 4). The alternative criteria for additional examinations contained in Code Case N-578-1 provides a more refined methodology for implementing necessary additional examinations.
>
> To supplement the requirements listed in Table 4-1, "Summary of Degradation-Specific Inspection Requirements and Examination Methods" of EPRI TR-112657, QCNPS will utilize the provisions listed in Table 1, Examination Category R-A, "Risk-Informed Piping Examinations" contained in Code Case N-578-1 (Reference 4). To implement Note 10 of this table, paragraphs and figures from the 1995 Edition with the 1996 Addenda of ASME Section XI (QCNPS's code of record for the Fourth Interval) will be utilized which parallel those referenced in the Code Case for the 1989 Edition. Table 1 of Code Case N-578-1 will be used as it provides a detailed breakdown for examination method and categorization of parts to be examined.

The QCNPS RISI Program, as developed in accordance with EPRI TR-112657, Rev. B-A (Reference 1), requires that 25% of the elements that are categorized as "High" risk (i.e., Risk Category 1, 2, and 3) and 10% of the elements that are categorized as "Medium" risk (i.e., Risk Categories 4 and 5) be selected for inspection. For this application, the guidance for the examination volume for a given degradation mechanism is provided by the EPRI TR-112657 while the guidance for the examination method and categorization of parts to be examined are provided by the EPRI TR-112657 as supplemented by Code Case N-578-1.

RELIEF REQUEST NUMBER: I4R-02
(Page 5 of 5)

PROPOSED ALTERNATE PROVISIONS (Continued)

In addition to this risk-informed evaluation, selection, and examination procedure, all ASME Section XI piping components, regardless of risk classification, will continue to receive Code required pressure testing as part of the current ASME Section XI program. VT-2 visual examinations are scheduled in accordance with the QCNPS pressure testing program, which remains unaffected by the RISI program.

APPLICABLE TIME PERIOD

Relief is requested for the fourth ten-year inspection interval of the Inservice Inspection Program for QCNPS Units 1 and 2.

RELIEF REQUEST NUMBER: I4R-03
(Page 1 of 3)

COMPONENT IDENTIFICATION

Code Class:	All
Reference:	ASME Section XI, Appendix VII, Subsubarticle VII-4240, "Annual Training"
Examination Category:	All categories for components subject to Ultrasonic Examination
Item Number:	All item numbers for components subject to Ultrasonic Examination
Description:	Alternative Requirements to ASME Section XI, Appendix VII, Subsubarticle VII-240, "Annual Training"
Component Number:	All Components Subject to Ultrasonic Examination

CODE REQUIREMENT

10 CFR 50.55a, "Codes and Standards," Paragraph (b)(2) incorporates by reference, the 1995 Edition and Addenda through 1996 of Section XI of the American Society of Mechanical Engineers (ASME) Boiler and Pressure Vessel Code for use in preparing inservice inspection programs. Subsubarticle VII-4240, "Annual Training," of ASME Section XI, 1995 Edition with the 1996 Addenda, Appendix VII, requires a minimum of 10 hours annual training.

10 CFR 50.55a(b)(2)(xiv), "Appendix VIII personnel qualification," requires that all personnel qualified to perform ultrasonic examinations in accordance with ASME Section XI, Appendix VIII, shall receive 8 hours of annual hands-on training on specimens that contain cracks. This training must be completed no earlier than 6 months prior to performing ultrasonic examinations at a licensee's facility.

BASIS FOR RELIEF

Pursuant to 10 CFR 50.55a(a)(3)(i), relief is requested from the training provision of Subsubarticle VII-4240 of ASME Section XI, 1995 Edition with the 1996 Addenda, Appendix VII, that requires a minimum of 10 hours annual training. The basis of the relief request is that the proposed alternative would provide an acceptable level of quality and safety.

On September 22, 1999, the NRC published a final rule in the Federal Register (64 FR 51370) to amend 10 CFR 50.55a(b)(2), to incorporate by reference the 1995 Edition and addenda through the 1996 Addenda, of ASME Section XI. The change included the requirement to have a minimum of 10 hours of annual training contained in Subsubarticle VII-4240 of ASME Section XI.

RELIEF REQUEST NUMBER: I4R-03
(Page 2 of 3)

BASIS FOR RELIEF (Continued)

Additionally, the September 22, 1999, Federal Register notice amended 10 CFR 50.55a(b)(2)(xiv). The amended 10 CFR 50.55a(b)(2)(xiv) requires that all personnel qualified to perform ultrasonic examinations in accordance with Appendix VIII shall receive 8 hours of annual hands-on training on specimens that contain cracks. This training must be taken no earlier than 6 months prior to performing examinations at a licensee's facility. Paragraph 2.4.1.1.1 in the Federal Register notice contained the following statement which includes a discussion of the Electric Power Research Institute (EPRI) Performance Demonstration Initiative (PDI) program.

"The NRC had determined that this requirement (i.e., Subsubarticle VII-4240) was inadequate for two reasons. The first reason was that the training does not require laboratory work and examination of flawed specimens. Signals can be difficult to interpret and, as detailed in the regulatory analysis for this rulemaking, experience and studies indicate that the examiner must practice on a frequent basis to maintain the capability for proper interpretation. The second reason is related to the length of training and its frequency. Studies have shown that an examiner's capability begins to diminish within approximately 6 months if skills are not maintained. Thus, the NRC had determined that 10 hours of annual training is not sufficient practice to maintain skills, and that an examiner must practice on a more frequent basis to maintain proper skill level... The PDI program has adopted a requirement for 8 hours of training, but it is required to be hands-on practice. In addition, the training must be taken no earlier than 6 months prior to performing examinations at a licensee's facility. PDI believes that 8 hours will be acceptable relative to an examiner's abilities in this highly specialized skill area because personnel can gain knowledge of new developments, material failure modes, and other pertinent technical topics through other means. Thus, the NRC has decided to adopt in the Final Rule the PDI position on this matter. These changes are reflected in 10 CFR 50.55a(b)(2)(xiv) of the final rule."

Implementation of the training requirements contained in Subsubarticle VII-4240 of ASME Section XI, 1995 Edition with the 1996 Addenda, Appendix VII and 10 CFR 50.55a(b)(2)(xiv) will result in redundant training programs. The approval of this Relief Request, to qualify our personnel to perform ultrasonic examinations in accordance with 10 CFR 50.55a(b)(2)(xiv), will simplify record keeping, satisfy the need to maintain skills, and provide an acceptable level of quality and safety.

RELIEF REQUEST NUMBER: I4R-03
(Page 3 of 3)

PROPOSED ALTERNATIVE PROVISIONS

Annual ultrasonic training shall be conducted in accordance with 10 CFR 50.55a(b)(2)(xiv) in lieu of Subsubarticle VII-4240 of ASME Section XI, 1995 Edition with the 1996 Addenda, Appendix VII. The annual ultrasonic training shall require that all personnel qualified for performing ultrasonic examinations in accordance with ASME Section XI, Appendix VIII, shall receive 8 hours of annual hands-on training on specimens that contain cracks. This training must be completed no earlier than 6 months prior to performing ultrasonic examinations at a licensee's facility.

APPLICABLE TIME PERIOD

Relief is requested for the fourth ten-year inspection interval of the Inservice Inspection Program for QCNPS Units 1 and 2.

RELIEF REQUEST NUMBER: I4R-04
(Page 1 of 2)

COMPONENT IDENTIFICATION

Code Class:	1
Reference:	ASME Section XI, Table IWB-2500-1 ASME Section XI, Appendix VIII, Supplement 4, Subparagraph 3.2(c)
Examination Category:	B-A
Item Number:	B1.10, B1.11, B1.12, B1.20, B1.21, B1.22, B1.50, B1.51
Description:	Alternative Requirements to Appendix VIII, Supplement 4, "Qualification Requirements for the Clad/Base Metal Interface of Reactor Pressure Vessel"
Component Numbers:	All Components Subject to Ultrasonic Examination

CODE REQUIREMENT

10 CFR 50.55a(b)(2) incorporates by reference, the 1995 Edition with the 1996 Addenda of ASME Section XI for use in preparing inservice inspection programs.

Subparagraph 3.2(c) of ASME Section XI, Appendix VIII, Supplement 4, requires that the ultrasonic testing (UT) performance demonstration results be plotted on a two dimensional plot with the measured depth plotted along the ordinate axis and the true depth plotted along the abscissa axis. For qualification, the plot must satisfy the statistical parameters identified in Subparagraph 3.2(c).

BASIS FOR RELIEF

Pursuant to 10 CFR 50.55a(a)(3)(i), relief is requested from the statistical parameters identified in Subparagraph 3.2(c) of ASME Section XI, Appendix VIII, Supplement 4. The basis of the relief request is that the proposed alternatives would provide an acceptable level of quality and safety.

On September 22, 1999, the NRC published a final rule in the Federal Register (64 FR 51378) to amend 10 CFR 50.55a(b)(2), to incorporate by reference the 1995 Edition and addenda through the 1996 Addenda, of ASME Section XI. The change included the provisions of Subparagraph 3.2(a), 3.2(b) and 3.2(c) of ASME Section XI, 1995 Edition with the 1996 Addenda, Appendix VIII, Supplement 4.

RELIEF REQUEST NUMBER: I4R-04
(Page 2 of 2)

BASIS FOR RELIEF (Continued)

Additionally, the September 22, 1999, Federal Register amended 10 CFR 50.55a(b)(2)(xv)(C)(1). The amended 10 CFR 50.55a(b)(2)(xv)(C)(1), requires a depth sizing acceptance criterion of 0.15 inch Root Mean Square (RMS) to be used in lieu of the requirements of Subparagraph 3.2(a) and 3.2(b) of ASME Section XI, Appendix VIII, Supplement 4.

On March 26, 2001, the NRC published a correction to the September 22, 1999, final rule in the Federal Register (66 FR 16390). The NRC identified that an error had occurred in the published wording of 10 CFR 50.55a(b)(2)(xv)(C)(1). The corrected 10 CFR 50.55a(b)(2)(xv)(C)(1), requires a depth sizing acceptance criterion of 0.15 inch Root Mean Square (RMS) to be used in lieu of the requirements of Subparagraph 3.2(a) and a length sizing requirement of 0.75 inch RMS to be used in lieu of the requirements 3.2(b) of ASME Section XI, Appendix VIII, Supplement 4.

The statistical parameters to be used in flaw sizing specified in Subparagraph 3.2(c) of ASME Section XI, 1995 Edition with the 1996 Addenda, Appendix VIII, Supplement 4, rely upon the depth sizing acceptance criteria used in Subparagraph 3.2(a) and the length sizing acceptance criteria used in Subparagraph 3.2(b). For Supplement 4 UT performance demonstrations, the linear regression line of the data required by Subparagraph 3.2(c) is not applicable because the performance demonstrations are performed on test specimens with flaws located on the inner 15% through-wall. Additionally, the Subparagraph 3.2(c) specified value for evaluating the mean deviation of flaw depth is not restrictive enough for evaluating flaw depths within the inner 15% of wall thickness. We propose to use the 10 CFR 50.55a(b)(2)(xv)(C)(1) RMS calculations of Subparagraph 3.2(a), which utilizes an RMS value of 0.15 inch depth, and the RMS calculations of Subparagraph 3.2(b), which utilizes an RMS value of 0.75 inch length, in lieu of the statistical parameters of 3.2(c).

PROPOSED ALTERNATIVE PROVISIONS

The RMS calculations of Subparagraph 3.2(a) of ASME Section XI, Appendix VIII, Supplement 4, which utilize an RMS value of 0.15 depth and the RMS calculations of Subparagraph 3.2(b), which utilizes an RMS value of 0.75 length shall be used in lieu of the statistical parameters of Subparagraph 3.2(c) of ASME Section XI, Appendix VIII, Supplement 4.

APPLICABLE TIME PERIOD

Relief is requested for the fourth ten-year inspection interval of the Inservice Inspection Program for QCNPS Units 1 and 2.

RELIEF REQUEST NUMBER: I4R-05
(Page 1 of 5)

COMPONENT IDENTIFICATION

Code Class:	2
Reference:	Table IWC-2500-1
Examination Category: C-H	
Description:	Exemption From Pressure Testing Reactor Pressure Vessel Head Flange Seal Leak Detection System.
Component Number:	Flange Seal Leak Detection Line Pressure Retaining Components.

CODE REQUIREMENTS

Table IWC-2500-1 requires a Visual VT-2 examination to be performed during a system leakage test.

BASIS FOR RELIEF

Pursuant to 10 CFR 50.55a(a)(3)(i), relief is requested on the basis that the proposed alternatives provide an acceptable level of quality and safety.

The Reactor Pressure Vessel Head Flange Leak Detection Line is separated from the reactor pressure boundary by one passive membrane, a silver plated O-ring located on the vessel flange. A second O-ring is located on the opposite side of the tap in the vessel flange (See Figure I4R-05.2). This line is required during plant operation in order to indicate failure of the inner flange seal O-ring. Failure of the O-ring would result in the annunciation of a High Level Alarm in the control room. On this annunciation, control room operators would quantify the leakage rate from the O-ring and then isolate the leak detection line from the drywell sump by closing the AO 1(2)-220-51 valve (see Figure I4R-05.1). This action is taken in order to prevent steam cutting of the O-ring and the vessel flange. Failure of the inner O-ring is the only condition under which this line is pressurized.

The configuration of this system precludes manual testing while the vessel head is removed because the odd configuration of the vessel tap (See I4R-05.2), combined with the small size of the tap and the high test pressure requirement (1000 psig minimum), prevents the tap in the flange from being temporarily plugged. The opening in the flange is only 3/16 of an inch in diameter and is smooth walled making a high pressure temporary seal very difficult. Failure of this seal could possibly cause ejection of the device used for plugging into the vessel.

RELIEF REQUEST NUMBER: I4R-05
(Page 2 of 5)

BASIS FOR RELIEF (Continued)

A pneumatic test performed with the head installed is precluded due to the configuration of the top head. The top head of the vessel contains two grooves that hold the O-rings. The O-rings are held in place by a series of retainer clips spaced 15° apart. The retainer clips are contained in a recessed cavity in the top head (see Figure I4R-05.3). If a pressure test was performed with the head on, the inner O-ring would be pressurized in a direction opposite to what it would see in normal operation. This test pressure would result in a net inward force on the O-ring that would tend to push it into the recessed cavity that houses the retainer clips. The O-ring material is only .050" thick with a silver plating thickness of .004" to .006" and could very likely be damaged by this deformation into the recessed areas on the top head.

In addition to the problems associated with the O-ring design that preclude this testing it is also questionable whether a pneumatic test is appropriate for this line. Although the line will initially contain steam if the inner O-ring leaks, the system actually detects leakage rate by measuring the level of condensate in a collection chamber. This would make the system medium water at the level switch. Finally, the use of a pneumatic test performed at a minimum of 1000 psig would represent an unnecessary risk in safety for the inspectors and test engineers in the unlikely event of a test failure, due to the large amount of stored energy contained in air pressurized to 1000 psig.

System leakage testing of this line is precluded because the line will only be pressurized in the event of a failure of the inner O-ring. It is extremely impractical to purposely fail the inner O-ring in order to perform a test.

Based on the above, QCNPS requests relief from the ASME Section XI requirements for system leakage testing of the Reactor Pressure Vessel Head Flange Seal Leak Detection System.

PROPOSED ALTERNATE EXAMINATION

A VT-2 visual examination will be performed on the line during vessel flood-up during a refueling outage. The static head developed due to the water above the vessel flange during flood-up will allow for the detection of any gross indications in the line. This examination will be performed with the frequency specified by Table IWC-2500-1 for a System Leakage Test (once each inspection period).

APPLICABLE TIME PERIOD

Relief is requested for the fourth ten-year inspection interval of the Inservice Inspection Program for QCNPS Units 1 and 2.

RELIEF REQUEST NUMBER: I4R-05
(Page 3 of 5)

FIGURE I4R-05.1

HEAD FLANGE SEAL LEAK DETECTION SCHEMATIC

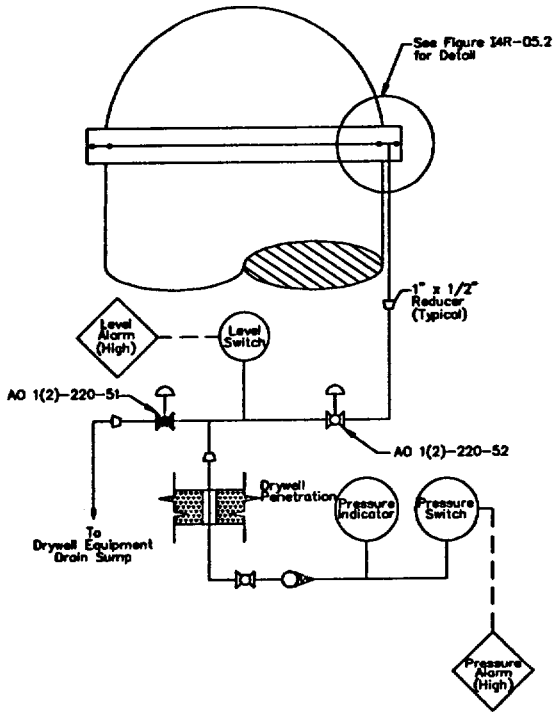

RELIEF REQUEST NUMBER: I4R-05
(Page 4 of 5)

FIGURE I4R-05.2

FLANGE SEAL LEAK DETECTION LINE DETAIL

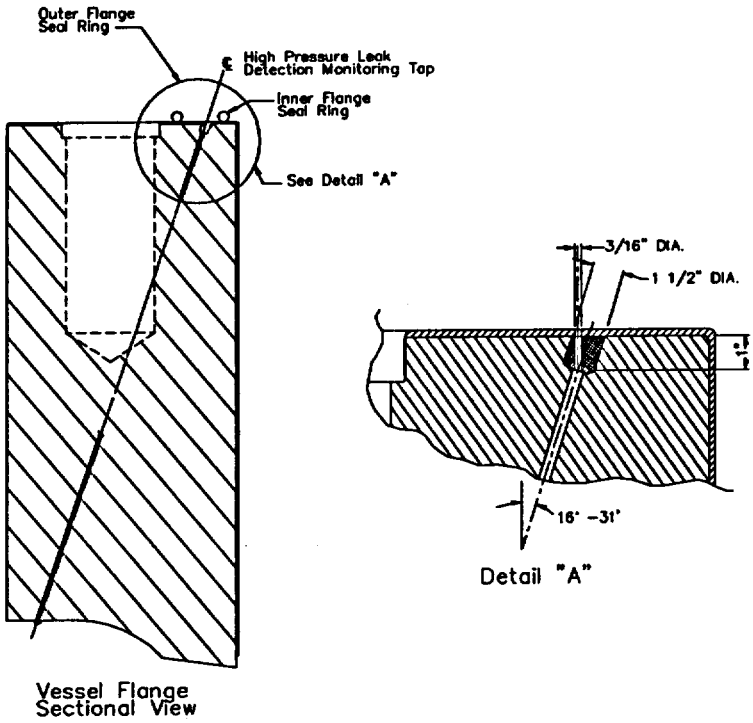

RELIEF REQUEST NUMBER: I4R-05
(Page 5 of 5)

FIGURE I4R-05.3

O-RING CONFIGURATION

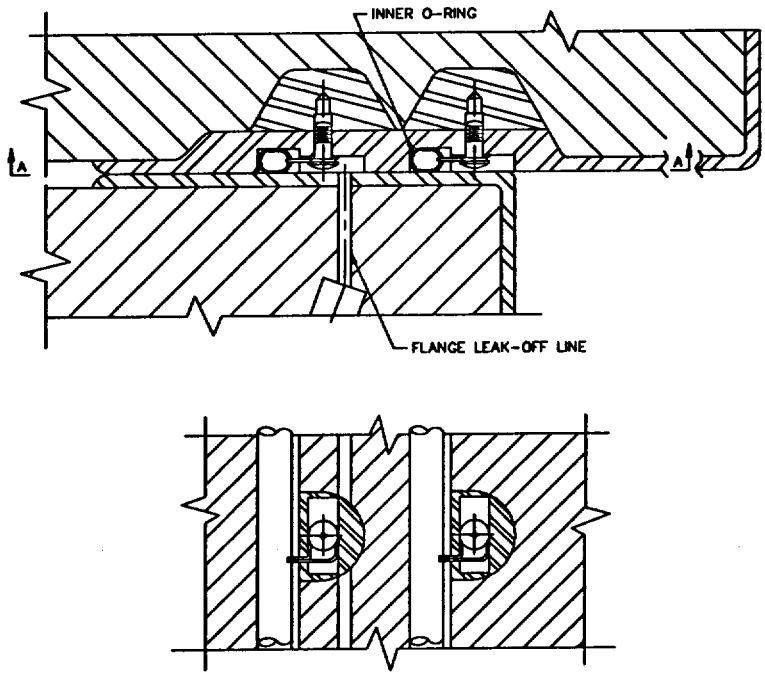

RELIEF REQUEST NUMBER: I4R-06
(Page 1 of 2)

COMPONENT IDENTIFICATION

Code Class:	2
References:	Table IWC-2500-1
Examination Category:	C-H
Item Number:	C7.10, C7.30, C7.50, C7.70
Description:	Continuous Pressure Monitoring of the Control Rod Drive (CRD) System Accumulators.
Component Number:	CRD Accumulators and associate piping

CODE REQUIREMENT FROM WHICH RELIEF IS REQUESTED

Table IWC-2500-1 requires a Visual VT-2 examination to be performed during a system leakage test.

BASIS FOR RELIEF

Pursuant to 10 CFR 50.55a(a)(3)(i), relief is requested on the basis that the proposed alternatives provide an acceptable level of quality and safety.

As required by QCNPS Technical Specifications, the CRD System Accumulator pressure must be greater than or equal to 940 psig to be considered operable. The accumulator pressure is continuously monitored by system instrumentation. Since the accumulators are isolated from the source of make up nitrogen, the continuous monitoring of the CRD accumulators functions as a pressure decay type test. Should accumulator pressure fall below 1000 psig, an alarm is received in the control room. The pressure drop for the associated accumulator is then recorded, and the accumulator is recharged in accordance with QCNPS procedures. If an accumulator requires charging more than twice in a thirty day period, then a leak check is performed to determine the cause of the pressure loss. When leakage is detected, corrective actions are taken to repair the leaking component as required by QCNPS procedures.

Since monitoring the nitrogen side of the accumulators is continuous, any leakage from the accumulator would be detected by normal system instrumentation. An additional Visual VT-2 examination performed once per inspection period would not provide an increase in safety, system reliability, or structural integrity. In addition, performance of a Visual VT-2 would require applying a leak detection solution to 177 accumulators per unit resulting in additional radiation exposure without any added benefit in safety. This inspection would not be consistent with As Low As Reasonably Achievable (ALARA) practices.

RELIEF REQUEST NUMBER: I4R-06
(Page 2 of 2)

BASIS FOR RELIEF (Continued)

Relief is requested from the Visual VT-2 examination requirements specified in Table IWC-2500-1 for the nitrogen side of the CRD System Accumulators on the basis that QCNPS Technical Specification Surveillance requirements exceed the code requirement for a Visual VT-2 Examination.

PROPOSED ALTERNATE EXAMINATIONS

As an alternate to the Visual VT-2 examination requirements of Table IWC-2500-1, QCNPS will perform continuous pressure decay monitoring in conjunction with Technical Specifications for the nitrogen side of the CRD Accumulators including attached piping.

APPLICABLE TIME PERIOD

Relief is requested for the fourth ten-year inspection interval of the Inservice Inspection Program for QCNPS Units 1 and 2.

RELIEF REQUEST NUMBER: I4R-07

(Page 1 of 3)

COMPONENT IDENTIFICATION

Code Class:	1, 2, and 3
References:	IWA-5250(a)(2)
Examination Category:	N/A
Item Number:	N/A
Description:	Alternative Rules for Corrective Measures if Leakage Occurs at Bolted Connections
Component Number:	All Pressure Retaining Bolted Connections

CODE REQUIREMENT FOR WHICH RELIEF IS REQUESTED

IWA-5250(a)(2) states that if leakage occurs at a bolted connection, one of the bolts shall be removed, VT-3 examined, and evaluated in accordance with IWA-3100. The bolt selected shall be the one closest to the source of leakage. When the removed bolt has evidence of degradation, all remaining bolting in the connection shall be removed, VT-3 examined, and evaluated in accordance with IWA-3100.

BASIS FOR RELIEF

Pursuant to 10 CFR 50.55a(a)(3)(i), relief is requested on the basis that the proposed alternative would provide an acceptable level of quality and safety.

Removal of pressure retaining bolting at mechanical connections for VT-3 visual examination and subsequent evaluation in locations where leakage has been identified is not always the most prudent course of action to determine condition of the bolting and/or the root cause of the leak. The requirement to remove, examine and evaluate bolting in this situation does not allow consideration of other factors which may indicate the condition of mechanical joint bolting. Other factors which should be considered in an evaluation of bolting condition when leakage has been identified at a mechanical joint include, but should not be limited to:

- Bolting materials
- Corrosiveness of process fluid
- Service age of joint bolting materials
- Leakage location
- Leakage history at connection
- Visual evidence of corrosion at connection (connection assembled)
- Plant / Industry studies of similar bolting materials in a similar environment
- Condition and leakage history of adjacent components

RELIEF REQUEST NUMBER: I4R-07
(Page 2 of 3)

BASIS FOR RELIEF (Continued)

An example at QCNPS is the complete replacement of bolting materials (e.g., studs, bolts, nuts, washers, etc.) at mechanical joints during plant outages. In some cases, when the associated system process piping is pressurized during plant start-up, leakage is identified at these joints. The cause of this leakage is often due to thermal expansion of the piping and bolting materials at the joint and subsequent process fluid seepage at the joint gasket. In most of these cases, proper re-torquing of the joint bolting stops the leakage. Removal of any of the joint bolting to evaluate for corrosion would be unwarranted in this situation. ASME Section XI Code Interpretation XI-1-92-01 has recognized that this situation exists, and has clarified that the requirements of IWA-5250(a)(2) do not apply.

PROPOSED ALTERNATE PROVISIONS

QCNPS proposes the following alternative, consistent with the methodology of Code Case N-566-2, to the requirements of IWA-5250(a)(2), which will provide an equivalent level of quality and safety when evaluating leakage and bolting material condition at Class 1, 2, and 3 bolted connections.

As an alternative to the to the requirements of Subparagraph IWA-5250(a)(2), one of the following requirements will be met for leakage at bolted connections:

(a) The leakage will be stopped, and the bolting and component material will be reviewed for joint integrity as described in (c) below.

(b) If the leakage is not stopped, the QCNPS will evaluate the structural integrity and consequences of continuing operation, and the effect on the system operability of continued leakage. This engineering evaluation will include the considerations listed in (c) below.

(c) The evaluation of (a) and (b) above is to determine the susceptibility of the bolting to corrosion and failure. This evaluation will include the following:

(1) the number and service age of the bolts;
(2) bolt and component material;
(3) corrosiveness of process fluid;
(4) leak location and system function;
(5) leakage history at the connection or other system components;
(6) visual evidence of corrosion at the assembled connection.

RELIEF REQUEST NUMBER: I4R-07
(Page 3 of 3)

PROPOSED ALTERNATE PROVISIONS (Continued)

If any of the above parameters indicates a need for further examination, the corrective action will be taken in accordance with IWA-5250(a)(2).

APPLICABLE TIME PERIOD

Relief is requested for the fourth ten-year inspection interval of the Inservice Inspection Program for QCNPS Units 1 and 2.

RELIEF REQUEST: I4R-08
(Page 1 of 2)

COMPONENT IDENTIFICATION

Code Class:	2 and 3
Reference:	IWC-3122.3
	IWC-3132.3
	IWC-3600
	IWD-3000
Examination Category:	N/A
Item Number:	N/A
Description:	Evaluation Criteria for Temporary Acceptance of Flaws
Component Number:	Moderate Energy Class 2 and 3 Piping

CODE REQUIREMENTS

IWC-3122.3 states that a component whose volumetric or surface examination detects flaws may be acceptable for continued service without a repair/replacement activity if an analytical evaluation is performed in accordance with IWC-3600. Similar requirements for visual examinations are contained in IWC-3132.3.

In the 1995 Edition with the 1996 Addenda of ASME Section XI, IWC-3600, Analytical Evaluation of Flaws, and IWD-3000, Acceptance Standards, are in the course of preparation and state that the requirements of IWB may be used.

BASIS FOR RELIEF

Pursuant to 10 CFR 50.55a(a)(3)(i), relief is requested on the basis that the proposed alternatives would provide an acceptable level of quality and safety.

ASME Section XI Code Case N-513 is conditionally approved for use in Revision 13 of Regulatory Guide 1.147; however, this Case is not applicable to the 1996 Addenda which is QCNPS's code of record for the Fourth Inspection Interval. Code Case N-513-1 has since been issued in Supplement 11 of the 1998 Edition and is currently applicable through the 2001 Edition. This revision of the Code Case is not yet approved for use by the NRC.

Code Case N-513-1 revises the base case to expand the temporary acceptance methodology from Class 3 moderate energy piping to Class 2 and 3 moderate energy piping. Both cases provide requirements which may be followed for temporary acceptance of flaws in ASME Section III, ANSI B31.1, and ANSI B31.7 piping designated as Class 2 or 3. This acceptance is limited to moderate energy piping defined as piping whose maximum operating temperature does not exceed 200°F and whose maximum operating pressure does not exceed 275 psig. The provisions of the case demonstrate the integrity of the item containing the flaw for a limited period of time until appropriate repair/replacement or additional examination activities can be performed.

RELIEF REQUEST: I4R-08
(Page 2 of 2)

PROPOSED ALTERNATE PROVISIONS

When using analytical evaluation as the method of acceptance for flaws in moderate energy Class 2 or 3 piping, QCNPS will follow the provisions of Code Case N-513-1 without performing a repair/replacement activity. This acceptance will be temporary and will remain in affect for a limited time, not exceeding the time to the next scheduled outage.

QCNPS may implement this method or one of the other methods contained in ASME Section XI to accept detected flaws; however, in no case will the temporary evaluation process be applied to

(a) components other than pipe or tube,
(b) leakage through a gasket,
(c) threaded connections with nonstructural seal welds for leakage prevention, or
(d) degraded socket welds.

When applying the methods of Code Case N-513-1, the specific safety factors contained in Paragraph 4.0 of the Case will be satisfied. These conditions are consistent with those contained in 10 CFR 50.55a(b)(2)(xiii) regarding the use of Code Case N-513.

APPLICABLE TIME PERIOD

Relief is requested for the fourth ten-year inspection interval of the Inservice Inspection Program for QCNPS Units 1 and 2.

RELIEF REQUEST NUMBER: I4R-09

COMPONENT IDENTIFICATION

Code Class:	1
Reference:	ASME Section XI, Appendix VIII, Supplement 11, "Qualification Requirements For Full Structural Overlaid Wrought Austenitic Piping Welds"
Examination Category:	B-J
Item Number:	B9.11
Description:	Pressure Retaining Welds in Piping, Subject to Appendix VIII, Supplement 11 (Note: Also Identified in NRC Generic Letter 88-01 as Category E)
Component Numbers:	Weld Overlay Components Subject to Ultrasonic Examination

CODE REQUIREMENT

The Code requirements for which relief is requested are all contained within Appendix VIII, Supplement 11. For example, paragraph 1.1(d)(1), requires that all base metal flaws be cracks. Paragraph 1.1(e)(1) requires that at least 20% but less than 40% of the flaws shall be oriented within ±20 degrees of the pipe axial direction. Paragraph 1.1(e)(1) also requires that the rules of IWA-3300 shall be used to determine whether closely spaced flaws should be treated as single or multiple flaws. Paragraph 1.1(e)(2)(a)(1) requires that a base grading unit shall include at least 3 in. of the length of the overlaid weld and the outer 25 percent of the overlaid weld and base metal on both sides. Paragraph 1.1(e)(2)(a)(3) requires that for unflawed base grading units, at least 1 inch of unflawed overlaid weld and base metal shall exist on either side of the base grading unit. Paragraph 1.1(e)(2)(b)(1) requires that an overlay grading unit shall include the overlay material and the base metal-to-overlay interface of at least 6 sq. in. The overlay grading unit shall be rectangular, with minimum dimensions of 2 in. Paragraph 3.2(b) requires that all extensions of base metal cracking into the overlay material by at least 0.1 in. be reported as being intrusions into the overlay material.

Specific Code requirements for which relief is requested are identified in the right hand column of Table I4R-09.1.

BASIS FOR RELIEF

Pursuant to 10 CFR 50.55a(a)(3)(i), relief is requested on the basis that the proposed alternatives provide an acceptable level of quality and safety.

RELIEF REQUEST NUMBER: I4R-09
(Page 2 of 14)

BASIS FOR RELIEF (Continued)

Paragraph 1.1(d)(1), requires that all base metal flaws be cracks. As illustrated below, implanting a crack requires excavation of the base material on at least one side of the flaw. While this may be satisfactory for ferritic materials, it does not produce a usable axial flaw in austenitic materials because the sound beam, which normally passes only through base material, must now travel through weld material on at least one side, producing an unrealistic flaw response. To resolve this issue, the PDI program revised this paragraph to allow use of alternative flaw mechanisms under controlled conditions. For example, alternative flaws shall be limited to when implantation of cracks precludes obtaining an effective ultrasonic response, flaws shall be semi-elliptical with a tip width of less than or equal to 0.002 inches, and at least 70% of the flaws in the detection and sizing test shall be cracks and the remainder shall be alternative flaws.

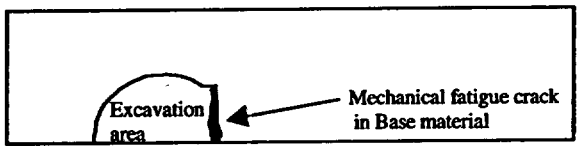

Relief is requested to allow closer spacing of flaws provided they do not interfere with detection or discrimination. The existing specimens used to date for qualification to the Tri-party (NRC/BWROG/EPRI) agreement have a flaw population density greater than allowed by the current Code requirements. These samples have been used successfully for all previous qualifications under the Tri-party agreement program. To facilitate their use and provide continuity from the Tri-party agreement program to Supplement 11, the PDI Program has merged the Tri-party test specimens into their weld overlay program. For example: the requirement for using IWA-3300 for proximity flaw evaluation in paragraph 1.1(e)(1) was excluded, instead indications will be sized based on their individual merits; paragraph 1.1(d)(1) includes the statement that intentional overlay fabrication flaws shall not interfere with ultrasonic detection or characterization of the base metal flaws; paragraph 1.1(e)(2)(a)(1) was modified to require that a base metal grading unit include at least 1 in. of the length of the overlaid weld, rather than 3 inches; paragraph 1.1(e)(2)(a)(3) was modified to require sufficient unflawed overlaid weld and base metal to exist on all sides of the grading unit to preclude interfering reflections from adjacent flaws, rather than the 1 in. requirement of Supplement 11; paragraph 1.1(e)(2)(b)(l) was modified to define an overlay fabrication grading unit as including the overlay material and the base metal-to-overlay interface for a length of at least 1 in., rather than the 6 sq. in. requirement of Supplement 11; and paragraph 1.1(e)(2)(b)(2) states that overlay fabrication grading units designed to be unflawed shall be separated by unflawed overlay material and unflawed base metal-to-overlay interface for at least 1 in. at both ends, rather than around its entire perimeter.

RELIEF REQUEST NUMBER: I4R-09

BASIS FOR RELIEF (Continued)

Additionally, the requirement for axially oriented overlay fabrication flaws in paragraph 1.1(e)(1) was excluded from the PDI Program as an improbable scenario. Weld overlays are typically applied using automated gas tungsten arc welding techniques with the filler metal being applied in a circumferential direction. Because resultant fabrication induced discontinuities would also be expected to have major dimensions oriented in the circumferential direction axial overlay fabrication flaws are unrealistic.

The PDI Program revised paragraph 2.0 to permit the overlay fabrication flaw test and the base metal flaw tests be performed separately.

The requirement in paragraph 3.2(b) for reporting all extensions of cracking into the overlay is omitted from the PDI Program because it is redundant to the RMS calculations performed in paragraph 3.2(c) and its presence adds confusion and ambiguity to depth sizing as required by paragraph 3.2(c). This also makes the weld overlay program consistent with the Supplement 2 depth sizing criteria.

There are, however, some additional changes that were inadvertently omitted from the Code Case. The most important change is paragraph 1.1(e)(2)(a)(1) where the phrase "and base metal on both sides," was inadvertently included in the description of a base metal grading unit. The PDI program intentionally excludes this requirement because some of the qualification samples include flaws on both sides of the weld. To avoid confusion several instances of the term "cracks" or "cracking" were changed to the term "flaws" because of the use of alternative flaw mechanisms. Additionally, to avoid confusion, the overlay thickness tolerance contained in paragraph 1.1(b) last sentence, was reworded and the phrase "and the remainder shall be alternative flaws" was added to the next to last sentence in paragraph 1.1(d)(1). These changes are identified by **bold** print in the third column of Table I4R-09.1.

PDI has submitted these changes as a Code Case and they have been approved, but the Code Case will not be published until later in 2002. A detailed comparison matrix (Table I4R-09.1) between Supplement 11, the proposed ASME Section XI Code Case N-654 (provided for information only), and the PDI Program provides supporting documentation. The first column identifies the current requirements in the 95 Edition and 96 Addenda of Supplement 11, while the second (middle) column identifies the changes made by the Code Case.

PROPOSED ALTERNATE EXAMINATIONS

In lieu of the requirements of ASME Section XI, 1995 Edition with the 1996 Addenda, Appendix VIII, Supplement 11, QCNPS will use the PDI Program.

RELIEF REQUEST NUMBER: I4R-09
(Page 4 of 14)

APPLICABLE TIME PERIOD

Relief is requested for the fourth ten-year inspection interval of the Inservice Inspection Program for QCNPS Units 1 and 2.

RELIEF REQUEST NUMBER: I4R-09

TABLE I4R-09.1

SUPPLEMENT 11 – QUALIFICATION REQUIREMENTS FOR FULL STRUCTURAL OVERLAID WROUGHT AUSTENITIC PIPING WELDS	PROPOSED CODE CASE N-654 Extracted from: http://www.boilercode.org/PDF/bc00-756R.pdf (Provided for Information Only)	PDI PROGRAM: The Proposed Alternative to Supplement 11 Requirements
1.0 SPECIMEN REQUIREMENTS Qualification test specimens shall meet the requirements listed herein, unless a set of specimens is designed to accommodate specific limitations stated in the scope of the examination procedure (e.g., pipe size, weld joint configuration, access limitations). The same specimens may be used to demonstrate both detection and sizing qualification.	No Change	No Change
1.1 General. The specimen set shall conform to the following requirements.	No Change	No Change
(a) Specimens shall have sufficient volume to minimize spurious reflections that may interfere with the interpretation process.	No Change	No Change
(b) The specimen set shall consist of at least three specimens having different nominal pipe diameters and overlay thicknesses. They shall include the minimum and maximum nominal pipe diameters for which the examination procedure is applicable. Pipe diameters within a range of 0.9 to 1.5 times a nominal diameter shall be considered equivalent. If the procedure is applicable to pipe diameters of 24 in. or larger, the specimen set must include at least one specimen 24 in. or larger but need not include the maximum diameter. The specimen set must include at least one specimen with overlay thickness within -0.1 in. to +0.25 in. of the maximum nominal overlay thickness for which the procedure is applicable.	No Change	(b) The specimen set shall consist of at least three specimens having different nominal pipe diameters and overlay thicknesses. They shall include the minimum and maximum nominal pipe diameters for which the examination procedure is applicable. Pipe diameters within a range of 0.9 to 1.5 times a nominal diameter shall be considered equivalent. If the procedure is applicable to pipe diameters of 24 in. or larger, the specimen set must include at least one specimen 24 in. or larger but need not include the maximum diameter. **The specimen set shall include specimens with overlay thickness within +0.1 in. of the minimum nominal overlay thickness and within -0.25 in. of the maximum nominal overlay thickness for which the procedure is applicable.**

RELIEF REQUEST NUMBER: I4R-09

TABLE I4R-09.1

SUPPLEMENT 11 – QUALIFICATION REQUIREMENTS FOR FULL STRUCTURAL OVERLAID WROUGHT AUSTENITIC PIPING WELDS	PROPOSED CODE CASE N-654 Extracted from: http://www.boilercode.org/PDF/bc00-756R.pdf (Provided for Information Only)	PDI PROGRAM: The Proposed Alternative to Supplement 11 Requirements
(c) The surface condition of at least two specimens shall approximate the roughest surface condition for which the examination procedure is applicable.	No Change	No Change
(d) Flaw Conditions (1) Base metal flaws. All flaws must be cracks in or near the butt weld heat-affected zone, open to the inside surface, and extending at least 75% through the base metal wall. Flaws may extend 100% through the base metal and into the overlay material; in this case, intentional overlay fabrication flaws shall not interfere with ultrasonic detection or characterization of the cracking. Specimens containing IGSCC shall be used when available.	(1) Base metal flaws. All flaws must be in or near the butt weld heat-affected zone, open to the inside surface, and extending at least 75% through the base metal wall. Intentional overlay fabrication flaws shall not interfere with ultrasonic detection or characterization of the cracking. Specimens containing IGSCC shall be used when available. At least 70 percent of the flaws in the detection and sizing tests shall be cracks. Alternative flaw mechanisms, if used, shall provide crack-like reflective characteristics and shall be limited by the following: (a) Flaws shall be limited to when implantation of cracks precludes obtaining a realistic ultrasonic response. (b) Flaws shall be semi-elliptical with a tip width of less than or equal to 0.002 inches.	(1) Base metal flaws. All flaws must be in or near the butt weld heat-affected zone, open to the inside surface, and extending at least 75% through the base metal wall. Intentional overlay fabrication flaws shall not interfere with ultrasonic detection or characterization of the **base metal flaws**. Specimens containing IGSCC shall be used when available. At least 70 percent of the flaws in the detection and sizing tests shall be cracks **and the remainder shall be alternative flaws**. Alternative flaw mechanisms, if used, shall provide crack-like reflective characteristics and shall be limited by the following: (a) Flaws shall be limited to when implantation of cracks precludes obtaining an effective ultrasonic response. (b) Flaws shall be semi-elliptical with a tip width of less than or equal to 0.002 inches.

RELIEF REQUEST NUMBER: I4R-09
(Page 7 of 14)

TABLE I4R-09.1

SUPPLEMENT 11 – QUALIFICATION REQUIREMENTS FOR FULL STRUCTURAL OVERLAID WROUGHT AUSTENITIC PIPING WELDS	PROPOSED CODE CASE N-654 Extracted from: http://www.boilercode.org/PDF/bc00-756R.pdf (Provided for Information Only)	PDI PROGRAM: The Proposed Alternative to Supplement 11 Requirements
(2) Overlay fabrication flaws. At least 40% of the flaws shall be non-crack fabrication flaws (e.g., sidewall lack of fusion or laminar lack of bond) in the overlay or the pipe-to-overlay interface. At least 20% of the flaws shall be cracks. The balance of the flaws shall be of either type.	No Change	No Change
(e) Detection Specimens (1) At least 20% but less than 40% of the flaws shall be oriented within ±20 deg. of the pipe axial direction. The remainder shall be oriented circumferentially. Flaws shall not be open to any surface to which the candidate has physical or visual access. The rules of IWA-3300 shall be used to determine whether closely spaced flaws should be treated as single or multiple flaws.	(1) At least 20% but less than 40% of the base metal flaws shall be oriented within +20 deg. of the pipe axial direction. The remainder shall be oriented circumferentially. Flaws shall not be open to any surface to which the candidate has physical or visual access.	(1) At least 20% but less than 40% of the base metal flaws shall be oriented within +20 deg. of the pipe axial direction. The remainder shall be oriented circumferentially. Flaws shall not be open to any surface to which the candidate has physical or visual access.
(2) Specimens shall be divided into base and overlay grading units. Each specimen shall contain one or both types of grading units.	(2) Specimens shall be divided into base metal and overlay fabrication grading units. Each specimen shall contain one or both types of grading units. Flaws shall not interfere with ultrasonic detection or characterization of other flaws.	(2) Specimens shall be divided into base metal and overlay fabrication grading units. Each specimen shall contain one or both types of grading units. Flaws shall not interfere with ultrasonic detection or characterization of other flaws.
(a)(1) A base grading unit shall include at least 3 in. of the length of the overlaid weld. The base grading unit includes the outer 25% of the overlaid weld and base metal on both sides. The base grading unit shall not include the inner 75% of the overlaid weld and base metal overlay material, or base metal-to-overlay interface.	(a)(1) A base metal grading unit shall include at least 1 in. of the length of the overlaid weld. The base metal grading unit includes the outer 25% of the overlaid weld and base metal on both sides. The base metal grading unit shall not include the inner 75% of the overlaid weld and base metal overlay material, or base metal-to-overlay interface.	**(a)(1) A base metal grading unit shall include at least 1 in. of the length of the overlaid weld.** The base metal grading unit includes the outer 25% of the overlaid weld. **The base metal grading unit shall not include the inner 75% of the overlaid weld and base metal overlay material, or base metal-to-overlay interface.**

RELIEF REQUEST NUMBER: I4R-09

TABLE I4R-09.1

SUPPLEMENT 11 – QUALIFICATION REQUIREMENTS FOR FULL STRUCTURAL OVERLAID WROUGHT AUSTENITIC PIPING WELDS	PROPOSED CODE CASE N-654 Extracted from: http://www.boilercode.org/PDF/bc00-756R.pdf (Provided for Information Only)	PDI PROGRAM: The Proposed Alternative to Supplement 11 Requirements
(a)(2) When base metal cracking penetrates into the overlay material, the base grading unit shall include the overlay metal within 1 in. of the crack location. This portion of the overlay material shall not be used as part of any overlay grading unit.	(a)(2) When base metal cracking penetrates into the overlay material, the base metal grading unit shall not be used as part of any overlay fabrication grading unit.	(a)(2) When base metal **flaws penetrate** into the overlay material, the base metal grading unit shall not be used as part of any overlay fabrication grading unit.
(a)(3) When a base grading unit is designed to be unflawed, at least 1 in. of unflawed overlaid weld and base metal shall exist on either side of the base grading unit. The segment of weld length used in one base grading unit shall not be used in another base grading unit. Base grading units need not be uniformly spaced around the specimen.	(a)(3) Sufficient unflawed overlaid weld and base metal shall exist on all sides of the grading unit to preclude interfering reflections from adjacent flaws.	(a)(3) Sufficient unflawed overlaid weld and base metal shall exist on all sides of the grading unit to preclude interfering reflections from adjacent flaws.
(b)(l) An overlay grading unit shall include the overlay material and the base metal-to-overlay interface of at least 6 sq. in. The overlay grading unit shall be rectangular, with minimum dimensions of 2 in.	(b)(l) An overlay fabrication grading unit shall include the overlay material and the base metal-to-overlay interface for a length of at least 1 in.	(b)(l) An overlay fabrication grading unit shall include the overlay material and the base metal-to-overlay interface for a length of at least 1 in.

RELIEF REQUEST NUMBER: I4R-09

TABLE I4R-09.1

SUPPLEMENT 11 – QUALIFICATION REQUIREMENTS FOR FULL STRUCTURAL OVERLAID WROUGHT AUSTENITIC PIPING WELDS	PROPOSED CODE CASE N-654 Extracted from: http://www.boilercode.org/PDF/bc00-756R.pdf (Provided for Information Only)	PDI PROGRAM: The Proposed Alternative to Supplement 11 Requirements
(b)(2) An overlay grading unit designed to be unflawed shall be surrounded by unflawed overlay material and unflawed base metal-to-overlay interface for at least 1 in. around its entire perimeter. The specific area used in one overlay grading unit shall not be used in another overlay grading unit. Overlay grading units need not be spaced uniformly about the specimen.	(b)(2) Overlay fabrication grading units designed to be unflawed shall be separated by unflawed overlay material and unflawed base metal-to-overlay interface for at least 1 in. at both ends. Sufficient unflawed overlaid weld and base metal shall exist on both sides of the overlay fabrication grading unit to preclude interfering reflections from adjacent flaws. The specific area used in one overlay fabrication grading unit shall not be used in another overlay fabrication grading unit. Overlay fabrication grading units need not be spaced uniformly about the specimen.	(b)(2) Overlay fabrication grading units designed to be unflawed shall be separated by unflawed overlay material and unflawed base metal-to-overlay interface for at least 1 in. at both ends. Sufficient unflawed overlaid weld and base metal shall exist on both sides of the overlay fabrication grading unit to preclude interfering reflections from adjacent flaws. The specific area used in one overlay fabrication grading unit shall not be used in another overlay fabrication grading unit. Overlay fabrication grading units need not be spaced uniformly about the specimen.
(b)(3) Detection sets shall be selected from Table VIII-S2-1. The minimum detection sample set is five flawed base grading units, ten unflawed base grading units, five flawed overlay grading units, and ten unflawed overlay grading units. For each type of grading unit, the set shall contain at least twice as many unflawed as flawed grading units.	(b)(3) Detection sets shall be selected from Table VIII-S2-1. The minimum detection sample set is five flawed base metal grading units, ten unflawed base metal grading units, five flawed overlay fabrication grading units, and ten unflawed overlay fabrication grading units. For each type of grading unit, the set shall contain at least twice as many unflawed as flawed grading units. For initial procedure qualification, detection sets shall include the equivalent of three personnel qualification sets. To qualify new values of essential variables, at least one personnel qualification set is required.	(b)(3) Detection sets shall be selected from Table VIII-S2-1. The minimum detection sample set is five flawed base metal grading units, ten unflawed base metal grading units, five flawed overlay fabrication grading units, and ten unflawed overlay fabrication grading units. For each type of grading unit, the set shall contain at least twice as many unflawed as flawed grading units. For initial procedure qualification, detection sets shall include the equivalent of three personnel qualification sets. To qualify new values of essential variables, at least one personnel qualification set is required.

RELIEF REQUEST NUMBER: I4R-09

TABLE I4R-09.1

SUPPLEMENT 11 – QUALIFICATION REQUIREMENTS FOR FULL STRUCTURAL OVERLAID WROUGHT AUSTENITIC PIPING WELDS	PROPOSED CODE CASE N-654 Extracted from: http://www.boilercode.org/PDF/bc00-756R.pdf (Provided for Information Only)	PDI PROGRAM: The Proposed Alternative to Supplement 11 Requirements
(f) Sizing Specimen (1) The minimum number of flaws shall be ten. At least 30% of the flaws shall be overlay fabrication flaws. At least 40% of the flaws shall be cracks open to the inside surface.	(1) The minimum number of flaws shall be ten. At least 30% of the flaws shall be overlay fabrication flaws. At least 40% of the flaws shall be cracks open to the inside surface. For initial procedure qualification, sizing sets shall include the equivalent of three personnel qualification sets. To qualify new values of essential variables, at least one personnel qualification set is required.	(1) The minimum number of flaws shall be ten. At least 30% of the flaws shall be overlay fabrication flaws. At least 40% of the flaws shall be open to the inside surface. For initial procedure qualification, sizing sets shall include the equivalent of three personnel qualification sets. To qualify new values of essential variables, at least one personnel qualification set is required.
(2) At least 20% but less than 40% of the flaws shall be oriented axially. The remainder shall be oriented circumferentially. Flaws shall not be open to any surface to which the candidate has physical or visual access.	No Change	No Change
(3) Base metal cracking used for length sizing demonstrations shall be oriented circumferentially.	No Change	(3) Base metal flaws used for length sizing demonstrations shall be oriented circumferentially.
(4) Depth sizing specimen sets shall include at least two distinct locations where cracking in the base metal extends into the overlay material by at least 0.1 in. in the through-wall direction.	No Change	(4) Depth sizing specimen sets shall include at least two distinct locations where flaws in the base metal extend into the overlay material by at least 0.1 in. in the through-wall direction.

RELIEF REQUEST NUMBER: I4R-09

TABLE I4R-09.1

SUPPLEMENT 11 – QUALIFICATION REQUIREMENTS FOR FULL STRUCTURAL OVERLAID WROUGHT AUSTENITIC PIPING WELDS	PROPOSED CODE CASE N-654 Extracted from: http://www.boilercode.org/PDF/bc00-756R.pdf (Provided for Information Only)	PDI PROGRAM: The Proposed Alternative to Supplement 11 Requirements
2.0 CONDUCT OF PERFORMANCE DEMONSTRATION The specimen inside surface and identification shall be concealed from the candidate. All examinations shall be completed prior to grading the results and presenting the results to the candidate. Divulgence of particular specimen results or candidate viewing of unmasked specimens after the performance demonstration is prohibited.	The specimen inside surface and identification shall be concealed from the candidate. All examinations shall be completed prior to grading the results and presenting the results to the candidate. Divulgence of particular specimen results or candidate viewing of unmasked specimens after the performance demonstration is prohibited. The overlay fabrication flaw test and the base metal flaw test may be performed separately.	The specimen inside surface and identification shall be concealed from the candidate. All examinations shall be completed prior to grading the results and presenting the results to the candidate. Divulgence of particular specimen results or candidate viewing of unmasked specimens after the performance demonstration is prohibited. The overlay fabrication flaw test and the base metal flaw test may be performed separately.
2.1 Detection Test. Flawed and unflawed grading units shall be randomly mixed. Although the boundaries of specific grading units shall not be revealed to the candidate, the candidate shall be made aware of the type or types of grading units (base or overlay) that are present for each specimen.	Flawed and unflawed grading units shall be randomly mixed. Although the boundaries of specific grading units shall not be revealed to the candidate, the candidate shall be made aware of the type or types of grading units (base metal or overlay fabrication) that are present for each specimen.	Flawed and unflawed grading units shall be randomly mixed. Although the boundaries of specific grading units shall not be revealed to the candidate, the candidate shall be made aware of the type or types of grading units (base metal or overlay fabrication) that are present for each specimen.
2.2 Length Sizing Test. (a) The length sizing test may be conducted separately or in conjunction with the detection test.	No Change	

RELIEF REQUEST NUMBER: I4R-09
(Page 12 of 14)

TABLE I4R-09.1

SUPPLEMENT 11 – QUALIFICATION REQUIREMENTS FOR FULL STRUCTURAL OVERLAID WROUGHT AUSTENITIC PIPING WELDS	PROPOSED CODE CASE N-654 Extracted from: http://www.boilercode.org/PDF/bc00-756R.pdf (Provided for Information Only)	PDI PROGRAM: The Proposed Alternative to Supplement 11 Requirements
(b) When the length sizing test is conducted in conjunction with the detection test and the detected flaws do not satisfy the requirements of 1.1(f), additional specimens shall be provided to the candidate. The regions containing a flaw to be sized shall be identified to the candidate. The candidate shall determine the length of the flaw in each region.	No Change	No Change
(c) For a separate length sizing test, the regions of each specimen containing a flaw to be sized shall be identified to the candidate. The candidate shall determine the length of the flaw in each region.	No Change	No Change
(d) For flaws in base grading units, the candidate shall estimate the length of that part of the flaw that is in the outer 25% of the base wall thickness.	(d) For flaws in base metal grading units, the candidate shall estimate the length of that part of the flaw that is in the outer 25% of the base metal wall thickness.	(d) For flaws in base metal grading units, the candidate shall estimate the length of that part of the flaw that is in the outer 25% of the base metal wall thickness.
2.3 Depth Sizing Test. For the depth sizing test, 80% of the flaws shall be sized at a specific location on the surface of the specimen identified to the candidate. For the remaining flaws, the regions of each specimen containing a flaw to be sized shall be identified to the candidate. The candidate shall determine the maximum depth of the flaw in each region.	The candidate shall determine the depth of the flaw in each region.	The candidate shall determine the depth of the flaw in each region.

RELIEF REQUEST NUMBER: I4R-09

TABLE I4R-09.1

SUPPLEMENT 11 – QUALIFICATION REQUIREMENTS FOR FULL STRUCTURAL OVERLAID WROUGHT AUSTENITIC PIPING WELDS	PROPOSED CODE CASE N-654 Extracted from: http://www.boilercode.org/PDF/bc00-756R.pdf (Provided for Information Only)	PDI PROGRAM: The Proposed Alternative to Supplement 11 Requirements
3.0 ACCEPTANCE CRITERIA **3.1 Detection Acceptance Criteria.** Examination procedures, equipment, and personnel are qualified for detection when the results of the performance demonstration satisfy the acceptance criteria of Table VIII-S2-1 for both detection and false calls. The criteria shall be satisfied separately by the demonstration results for base grading units and for overlay grading units.	Examination procedures are qualified for detection when all flaws within the scope of the procedure are detected and the results of the performance demonstration satisfy the acceptance criteria of Table VIII-S2-1 for false calls. Examination equipment and personnel are qualified for detection when the results of the performance demonstration satisfy the acceptance criteria of Table VIII-S2-1 for both detection and false calls. The criteria shall be satisfied separately by the demonstration results for base metal grading units and for overlay fabrication grading units.	Examination procedures are qualified for detection when all flaws within the scope of the procedure are detected and the results of the performance demonstration satisfy the acceptance criteria of Table VIII-S2-1 for false calls. Examination equipment and personnel are qualified for detection when the results of the performance demonstration satisfy the acceptance criteria of Table VIII-S2-1 for both detection and false calls. The criteria shall be satisfied separately by the demonstration results for base metal grading units and for overlay fabrication grading units.
3.2 Sizing Acceptance Criteria. Examination procedures, equipment, and personnel are qualified for sizing when the results of the performance demonstration satisfy the following criteria.	No Change	No Change
(a) The RMS error of the flaw length measurements, as compared to the true flaw lengths, is less than or equal to 0.75 inch. The length of base metal cracking is measured at the 75% through-base-metal position.	No Change	(a) The RMS error of the flaw length measurements, as compared to the true flaw lengths, is less than or equal to 0.75 inch. The length of base metal flaws is measured at the 75% through-base-metal position.
(b) All extensions of base metal cracking into the overlay material by at least 0.1 in. are reported as being intrusions into the overlay material.	**This requirement is omitted.**	**This requirement is omitted.**

RELIEF REQUEST NUMBER: I4R-09
(Page 14 of 14)

TABLE I4R-09.1

SUPPLEMENT 11 – QUALIFICATION REQUIREMENTS FOR FULL STRUCTURAL OVERLAID WROUGHT AUSTENITIC PIPING WELDS	PROPOSED CODE CASE N-654 Extracted from: http://www.boilercode.org/PDF/bc00-756R.pdf (Provided for Information Only)	PDI PROGRAM: The Proposed Alternative to Supplement 11 Requirements
(c) The RMS error of the flaw depth measurements, as compared to the true flaw depths, is less than or equal to 0.125 in.	(b) The RMS error of the flaw depth measurements, as compared to the true flaw depths, is less than or equal to 0.125 in.	(b) The RMS error of the flaw depth measurements, as compared to the true flaw depths, is less than or equal to 0.125 in.

10.0 REFERENCES

The references used to develop this Inservice Inspection Program Plan include:

1) Code of Federal Regulations, Title 10, Part 50, Paragraph 50.55a, "Codes and Standards"

2) Code of Federal Regulations, Title 10, Part 50, Paragraph 2, "Definitions," the definition of "Reactor Coolant Pressure Boundary"

3) Code Of Federal Regulations, Title 10, Part 50, Appendix J, Primary Reactor Containment Testing for Water Cooled Power Reactors

4) ASME Boiler and Pressure Vessel Code, Section XI, Division 1, "Inservice Inspection of Nuclear Power Plant Components," the 1989 Edition with No Addenda

5) ASME Boiler and Pressure Vessel Code Section XI, Division 1, Subsections IWE and IWL, 1992 Edition with the 1992 Addenda

6) ASME Boiler and Pressure Vessel Code, Section XI, Division 1, "Inservice Inspection of Nuclear Power Plant Components," the 1995 Edition with the 1996 Addenda

7) ASME OM Code, 1995 Edition with the 1996 Addenda, Subsection ISTD, "Preservice and Inservice Examination and Testing of Dynamic Restraints (Snubbers) in Light-Water Reactor Nuclear Power Plants"

8) USAS B31.1.0-1967, "Power Piping"

9) SECY-96-080, Issuance of Final Amendment To 10 CFR 50.55a To Incorporate By Reference The ASME Boiler And Pressure Vessel Code (ASME Code), Section XI, Division 1, Subsection IWE and IWL

10) Regulatory Guide 1.26, Revision 3, "Quality Group Classifications and Standards for Water-, Steam-, and Radioactive Waste- Containing Components of Nuclear Power Plants"

11) Regulatory Guide 1.147, Revision 13 "Inservice Inspection Code Case Acceptability, ASME Section XI Division 1"

12) Quad Cities Station Units 1 and 2 Updated Final Safety Analysis Report (UFSAR)

13) Quad Cities Station Units 1 and 2 Technical Specification (TS)

14) Quad Cities Station Units 1 and 2 Technical Requirements Manual (TRM)

15) BWRVIP-75 "BWR Vessel and Internals Project Technical Basis for Revisions to Generic Letter 88-01 Inspection Schedules" as conditionally approved by NRC SER (TAC NO. MA5012), dated September 15, 2000

16) NRC NUREG 0313, Revision 2, "Technical Report on Material Selection and Processing Guidelines for BWR Coolant Pressure Boundary Piping"

17) Generic Letter 88-01, Revision 2, dated January 25, 1988, "NRC Position on Intergranular Stress Corrosion Cracking (IGSCC) in BWR Austenitic Stainless Steel Piping"

18) Generic Letter 88-01, Supplement 1, dated February 4, 1992, "NRC Position on Intergranular Stress Corrosion Cracking (IGSCC) in BWR Austenitic Stainless Steel Piping"

19) BWROG "Alternate BWR Feedwater Nozzle Inspection Requirements," dated October 1995

20) NRC NUREG 0737, dated November 1980, "TMI Action Plan Requirements"

21) NEP-17-09, Revision 0; "IGSCC Management Program For BWR Reactor Internals", dated July 21, 1998

22) Assessment of Quad Cities Station IGSCC Management Program for BWR Reactor Internals and Piping per the requirements of NEP-17-09, dated December 22, 1998

23) IGSCC Management Program Manual For BWR Vessel Internals and Piping, Revision 0, dated August 28, 1998

24) Quad Cities Appendix J Leak Rate Testing Program QCTP 0130-01

25) EPRI Containment Inspection Program Guide (TR-110698-R1)

26) Policy for Implementation of ASME IWE-5240 Visual Examination dated August 14, 1998 File 2-1.9

27) Maintenance Inspection Of Existing Level I Coatings Systems, SPP CI-1

28) EPRI Topical Report TR-112657, Rev. B-A, Final Report, "Revised Risk-Informed Inservice Inspection Evaluation Procedure," July 1999

29) NRC SER related to EPRI Topical Report TR-112657, Rev. B, Final Report, "Revised Risk-Informed Inservice Inspection Evaluation Procedure, July 1999," dated October 28, 1999

30) ComEd Risk-Informed Inservice Inspection Project "Definition of RISI Scope for QCNPS Units 1 and 2, Revision 1," dated April 17, 2000

31) ComEd Risk-Informed Inservice Inspection Evaluation (Final Report) for QCNPS Units 1 and 2

32) Quad Cities Station Units 1 and 2 ISI Classification Basis Document, Fourth Ten-Year Inspection Interval

33) QCNPS Units 1 and 2 ISI Selection Document, Fourth Ten-Year Inspection Interval

34) ER-AA-330, "Conduct of Inservice Inspection Activities"

35) ER-AA-330-001, "Section XI Pressure Testing"

36) ER-AA-330-002, "Inservice Inspection of Welds and Components"

37) ER-AA-330-003, "Visual Examination of Section XI Component Supports"

38) ER-AA-330-004, "Visual Examination of Technical Specification Snubbers"

39) ER-AA-330-007, "Visual Examination of Section XI Class MC Surfaces and Class CC Liners"

40) ER-AA-330-009, "ASME Section XI Repair/Replacement Program"

41) ER-AA-330-010, "Snubber Functional Testing"

42) ER-AA-335-018, "General, VT-1, VT-1C, VT-3, and VT-3C, Visual Examination of ASME Class MC and CC Containment Surfaces and Components"

43) General Electric Boiling Water Reactor System Department, Document No. 22A2750, Revision 6

44) QCNPS Reactor Coolant Pressure Boundary Normal Makeup Calculation, XCE.040.0202

45) QCNPS Design Analysis No. QDC-0200-M-1279, "ISI/RCPB Normal Makeup for CRD Housing Welds"

Attachment B

Relief Request Cross-Reference

3rd Interval Relief Request	4th Interval Relief Request	Description
CR-01	I4R-01	Inspection of Standby Liquid Control nozzle inner radius. Similar to relief request previously granted for Quad Cities 3rd Interval ISI program. Reference letter from R.A. Capra (USNRC) to D.L. Farrar (ComEd/Exelon) dated September 15, 1995 (TAC NOS. M85764 AND M85765).
CR-33	I4R-02	Alternate Risk-Informed Selection and Examination Criteria for Category B-F, B-J, C-F-1, and C-F-2 Pressure Retaining Piping Welds. Similar to relief request previously authorized for Quad Cities 3rd Interval ISI program. Reference letter from A.J. Mendiola (USNRC) to O.D. Kingsley (Exelon) dated February 5, 2002 (TAC NOS. MB0721 AND MB0722).
CR-38	I4R-03	Alternative Requirements to ASME Section XI, 1995 Edition with 1996 Addenda, Appendix VII, Subsubarticle VII-240, "Annual Training". Similar to relief request previously authorized for Quad Cities 3rd Interval ISI program. Reference letter from A.J. Mendiola (USNRC) to J.L. Skolds (Exelon) dated May 22, 2002 (TAC NOS. MB4768 AND MB4769).
CR-36	I4R-04	Alternative Requirements to Appendix VIII, Supplement 4, "Qualification Requirements for the Clad/Base Metal Interface of Reactor Pressure Vessel". Similar to relief request previously authorized for Quad Cities 3rd Interval ISI program. Reference letter from A.J. Mendiola (USNRC) to O.D. Kingsley (Exelon) dated December 6, 2001 (TAC NOS. MB2767 AND MB2768).
PR-02	I4R-05	Exemption from pressure testing Reactor Pressure Vessel Head Flange Seal Leak Detection System. Similar to relief request previously granted for Quad Cities 3rd Interval ISI program. Reference letter from R.A. Capra (USNRC) to D.L. Farrar (ComEd/Exelon) dated September 15, 1995 (TAC NOS. M85764 AND M85765).
PR-11	I4R-06	Continuous Pressure Monitoring of the Control Rod Drive (CRD) System Accumulators. Similar to relief request previously authorized for Quad Cities 3rd Interval ISI program. Reference letter from A.J. Mendiola (USNRC) to O.D. Kingsley (ComEd/Exelon) dated August 22, 2000 (TAC NOS. MA7842 AND MA7843).

Attachment B

Relief Request Cross-Reference

3rd Interval Relief Request	4th Interval Relief Request	Description
PR-12	I4R-07	Alternative Rules for Corrective Measures if Leakage Occurs at Bolted Connections. Adopts the provisions of Code Case N-566-2 not yet incorporated into Regulatory Guide 1.147. Similar to relief request previously authorized for Quad Cities 3rd Interval ISI program. Reference letter from A.J. Mendiola (USNRC) to O.D. Kingsley (ComEd/Exelon) dated February 3, 2000 (TAC NOS. MA6300 AND MA6301).
N/A	I4R-08	Evaluation Criteria for Temporary Acceptance of Flaws. Adopts the provisions of Code Case N-513-1 not yet incorporated into Regulatory Guide 1.147.
CR-37	I4R-9	Pressure Retaining Welds in Piping Subject to Appendix VIII, Supplement 11. Similar to relief request previously authorized for Quad Cities 3rd Interval ISI program. Reference letter from A. J. Mendiola (USNRC) to O.D. Kingsley (Exelon) dated February 21, 2002 (TAC NOS. MB3767 AND MB3768).