Duke Power
A Duke Energy Company

Duke Power Company
A Duke Energy Company
McGuire Nuclear Station
12700 Hagers Ferry Road
Huntersville, NC 28078-9340

(704) 875-4100

D.M. Jamil
Vice-President

January 16, 2003

U.S. Nuclear Regulatory Commission
Washington, DC 20555-0001
ATTENTION: Document Control Desk

SUBJECT: Relief Request 01-006 Rev.1
Request for Additional Information
McGuire Nuclear Station Unit 1
Docket Nos. 50-369

REFERENCE: (1) Duke Relief Request, 01-006, dated April 24, 2002, and (2) NRC Request for Additional Information, dated November 26, 2002

The attached revision to Relief Request 01-006 provides additional information that was requested by the NRC staff in Reference No. 2. The relief request was rewritten and additional drawings were included to better define the "determination of impracticality" and to provide "reasonable assurance of component integrity" as indicated in your letter.

Please direct questions related to this matter to Norman T. Simms of Regulatory Compliance at (704) 875-4685.

Very truly yours,

D.M. Jamil

Attachment

A047

cc:

L.A. Reyes
Regional Administrator, Region II
U.S. Nuclear Regulatory Commission
Atlanta Federal Center
61 Forsyth Street, SW, Suite 23T85
Atlanta, GA. 30323 - 3415

R.E. Martin, Project Manager (addressee only)
Office of Nuclear Reactor Regulation
U.S. Nuclear Regulatory Commission
One White Flint North, M ail Stop O-8G9
11555 Rockville Pike
Rockville, MD 20852-2738

S.M. Shaeffer
NRC Senior Resident Inspector (MNS)

bxc:

(w/o attachment)
N.T. Simms
G.J. Underwood (EC07J)
R.K. Rhyne (EC07J)
R.D. Klein (MG01MM)
R. Branch (MG01MM)

(w/ attachment)
ELL (EC05O)
Kay Crane
McGuire Master File 1.3.2.13

ATTACHMENT

Duke Energy Corporation

McGuire Nuclear Station - Unit 1

SECOND 10-YEAR INTERVAL REQUEST FOR RELIEF NO. 01-006 Rev. 1

Duke Energy Corporation has determined that conformance with certain ASME Section XI Code requirements is impractical. Therefore, pursuant to 10CFR50.55a (g) (5) (iii), Duke Energy requests relief from applicable portions of the code.

Included in this request are six Examination Category B-A welds.

The McGuire Unit 1 Inservice Inspection Plan was written to the requirements of the 1989 Edition of ASME Section XI, no addenda. The Second Interval start date was 12-1-1992. The end of the interval was concluded on 10-10-2002 during outage EOC-15. The interval was extended to include this outage, grace period was incorporated to complete some remaining examinations during this outage period.

The items in this Request for Relief were performed during refueling outage EOC-14.

Code Case N-460 applies to the examinations performed during this outage.

I. System / Component(s) for Which Relief is Requested:

Examination Category B-A:

Pressure Retaining Welds in Reactor Vessel, Lower Shell to Bottom Head Circumferential Weld

ID Number	Item Number
1RPV10-442	B01.011.003

II. Code Requirement:

ASME Boiler and Pressure Vessel Code, Section XI, 1989 Edition, Table IWB-2500-1, lists the following requirements for the examination category as shown below:

Figure IWB-2500-1. Examination Volume E-F-G-H.

III. Code Requirement from Which Relief Is Requested:

Relief is sought from the requirement to scan 100% of the examination volume.

IV. Basis for Relief:

During the ultrasonic examination of this circumferential weld, 100% coverage of the required examination volume could not be achieved. As shown in Attachment 1 (Pages 1-15) the examination coverage was reported as 69.00%. This percentage represents the aggregate coverage of all scans for the weld. Due to the proximity of six Core Guide Lugs 307 inches out of the weld length of 543.5 inches received 100% coverage from 4 orthogonal directions with 45 degree and 70 degree beam angles. Because the Core Guide Lugs cover part of the examination volume, 236.5 inches received coverage from one axial direction with the 45 degree (100%) and 70 degree (89%) beam angles. Circumferential scans were unable to cover the weld and base material under the Core Guide Lugs. In order to achieve more coverage, the Core Guide Lugs would have to be moved to allow greater access for scanning, which is impractical.

V. Alternate Examinations or Testing:

No additional ultrasonic examinations are planned during the current interval for this weld. However a visual examination was performed on the interior of the reactor vessel per the requirements of the ASME Section XI Code. The visual examination of the vessel interior did not identify any rejectable conditions. Reference Attachment 5 (Pages 1-7).

VI. Justification for the Granting of Relief:

Ultrasonic examination of this weld was conducted using personnel, equipment and procedures qualified in accordance with ASME Section XI, Appendix VIII, 1995 Edition with the 1996 Addenda as administered through the Performance Demonstration Initiative (PDI)

Program. Although 100% coverage of the examination volume could not be achieved, the amount of coverage obtained for this examination provides an acceptable level of quality and integrity.

Due to the design of the reactor vessel and location of the Core Guide Lugs it is not feasible to obtain the examination coverage required. Based on the portions and results of the required volumetric and visual examinations performed during this outage, it's our opinion that this combination of examinations provides a reasonable assurance of component integrity.

VII. Implementation Schedule:

No additional ultrasonic examination is planned during the current interval for this weld.

VIII. References:

Attachment 1. Information for this weld is shown on Pages 1 thru 15.

I. System / Component(s) for Which Relief is Requested:

Examination Category B-A:

Pressure Retaining Welds in Reactor Vessel, Lower Shell Longitudinal Weld

ID Numbers	Item Numbers
1RPV3-442A	B01.012.007
1RPV3-442B	B01.012.008
1RPV3-442C	B01.012.009

II. Code Requirement:

ASME Boiler and Pressure Vessel Code, Section XI, 1989 Edition Table IWB-2500-1, lists the following requirements for the examination category as shown below:

Figure IWB-2500-2. Examination Volume A-B-C-D.

III. Code Requirement from Which Relief Is Requested:

Relief is sought from the requirement to scan 100% of the examination volume.

IV. Basis for Relief:

During the ultrasonic examination of these three longitudinal seam welds, 100% coverage of the required examination volume could not be achieved. As shown in Attachment 2 (Pages 1-6), the examination coverage was limited to 79.00% due to the proximity of the Core Guide Lugs. This percentage represents the aggregate coverage of all scans for these welds. Seventy-nine percent of each weld length (77 inches) was examined from 4 orthogonal directions with 45 degree and 70 degree beam angles. Twenty-one percent (20.475 inches) received no coverage. In order to achieve more coverage, the Core Guide Lugs would have to be moved to allow greater access for scanning, which is impractical.

V. Alternate Examinations or Testing:

No additional examinations are planned during the current interval for these welds. However a visual examination was performed on the interior of the reactor vessel per the requirements of the ASME Section XI Code. The visual examination of the vessel interior did not identify any rejectable conditions. Reference Attachment 5 (Pages 1-7).

VI. Justification for the Granting of Relief:

Ultrasonic examination of these welds was conducted using personnel, equipment and procedures qualified in accordance with ASME Section XI, Appendix VIII, 1995 Edition with the 1996 Addenda as administered through the Performance Demonstration Initiative (PDI) Program. Although 100% coverage of the examination volume could not be achieved, the amount of coverage obtained for this examination provides an acceptable level of quality and integrity.

Due to the design of the reactor vessel and location of the Core Guide Lugs it is not feasible to obtain the examination coverage required. Based on the portions and results of the required volumetric and visual examinations performed during this outage, it's our opinion that this combination of examinations provides a reasonable assurance of component integrity.

VII. Implementation Schedule:

No additional ultrasonic examination is planned during the current interval for this weld.

VIII. References:

Attachment 2. Information for these welds is shown on Pages 1 thru 6.

I. System / Component(s) for Which Relief is Requested:

Examination Category B-A:

Pressure Retaining Welds in Reactor Vessel, Bottom Head Circumferential Weld

ID Number	Item Number
1RPV4-469	B01.021.002

II. Code Requirement:

ASME Boiler and Pressure Vessel Code, Section XI, 1989 Edition Table IWB-2500-1, lists the following requirements for the examination category as shown below:

Figure IWB-2500-3. Examination Volume A-B-C-D.

III. Code Requirement from Which Relief Is Requested:

Relief is sought from the requirement to scan 100% of the examination volume.

IV. Basis for Relief:

During the ultrasonic examination of this circumferential weld, 100% coverage of the required examination volume could not be achieved. As shown in Attachment 3 (Pages 1-6), the examination coverage was reported as 49.00% due to the proximity of In-core Instrument Nozzles. The percent of coverage represents the aggregate coverage of all scans for the weld. One hundred percent of the required examination volume was covered for the full length of the weld (424.3 inches) with 45 degree and 70 degree beam angles from one axial and one circumferential direction. In order to achieve greater than 90% coverage in four orthogonal directions, the In-core Instrument Nozzles would have to be moved to allow greater access for scanning, which is impractical.

V. Alternate Examinations or Testing:

No additional ultrasonic examinations are planned during the current interval for this weld. However a visual examination was performed on the interior of the reactor vessel per the requirements of the ASME Section XI Code. The visual examination of the vessel interior did not identify any rejectable conditions. Reference Attachment 5 (Pages 1-7).

VI. Justification for the Granting of Relief:

Ultrasonic examination of this weld was conducted using personnel, equipment and procedures qualified in accordance with ASME Section XI, Appendix VIII, 1995 Edition with the 1996 Addenda as administered through the Performance Demonstration Initiative (PDI) Program. Although 100% coverage of the examination volume could not be achieved, the amount of coverage obtained for this examination provides an acceptable level of quality and integrity.

Due to the design of the reactor vessel and location of the In-core Instrument Nozzles it is not feasible to obtain the examination coverage required. Based on the portions and results of the required volumetric and visual examinations performed during this outage, it's our opinion that this combination of examinations provides a reasonable assurance of component integrity.

VII. Implementation Schedule:

No additional ultrasonic examination is planned during the current interval for this weld.

VIII. References:

Attachment 3. Information for this weld is shown on Pages 1 thru 6.

I. System / Component(s) for Which Relief is Requested:

Examination Category B-A:

Pressure Retaining Welds in Reactor Vessel, Nozzle Belt Shell to Flange Weld

ID Number	Item Number
1RPV7-442	B01.030.002

II. Code Requirement:

ASME Boiler and Pressure Vessel Code, Section XI, 1989 Edition Table IWB-2500-1, lists the following requirements for each examination category as shown below:

Figure IWB-2500-4. Examination Volume A-B-C-D.

III. Code Requirement from Which Relief Is Requested:

Relief is sought from the requirement to scan 100% of the examination volume.

IV. Basis for Relief:

During the ultrasonic examination of this circumferential weld, 100% coverage of the required examination volume could not be achieved. As shown in Attachment 4, (Pages 1-4) the examination coverage was reported as 90.00% due to Keyway Specimen Tube Cutouts. The percent of coverage represents the aggregate coverage of all scans for the weld. The 70 degree beam angle covered 81% of the weld length (434.8 inches) and 88% of the base material in four orthogonal directions. The 45 degree beam angle covered 81% of the weld length and 91% of the base material in four orthogonal directions. In order to achieve more coverage, the Keyway Specimen Tube Cutouts would have to be moved to allow greater access for scanning, which is impractical.

V. Alternate Examinations or Testing:

No additional ultrasonic examinations are planned during the current interval for this weld. However a visual examination was performed on the interior of the reactor vessel per the requirements of the ASME Section XI Code. The visual examination of the vessel interior did not identify any rejectable conditions. Reference Attachment 5 (Pages 1-7).

VI. Justification for the Granting of Relief:

Ultrasonic examination of this weld was conducted using personnel, equipment and procedures qualified in accordance with ASME Section XI, Appendix VIII, 1995 Edition with the 1996 Addenda as administered through the Performance Demonstration Initiative (PDI) Program. Although 100% coverage of the examination volume could not be achieved, the amount of coverage obtained for this examination provides an acceptable level of quality and integrity.

Due to the design of the reactor vessel and location of the Keyway Specimen Tube Cutouts it is not feasible to obtain the examination coverage required. Based on the portions and results of the required volumetric and visual examinations performed during this outage, it's our opinion that this combination of examinations provides a reasonable assurance of component integrity.

VII. Implementation Schedule:

No additional ultrasonic examination is planned during the current interval for this weld.

VIII. References:

Attachment 4. Information for this weld is shown on Pages 1 thru 4.

The following individuals were involved in the development of this request for relief. Terry Moore (McGuire Reactor Systems Engineer) provided input to

the engineering justification (Section VI) for granting relief. Jim McArdle (NDE Level III) provided Sections II, III, IV and V. Gary Underwood (McGuire ISI Plan Manager) compiled and completed the request.

Sponsored By: Gary Underwood Date 1/09/03

Approved By: L. Kevin Rhyne Date 1/9/03

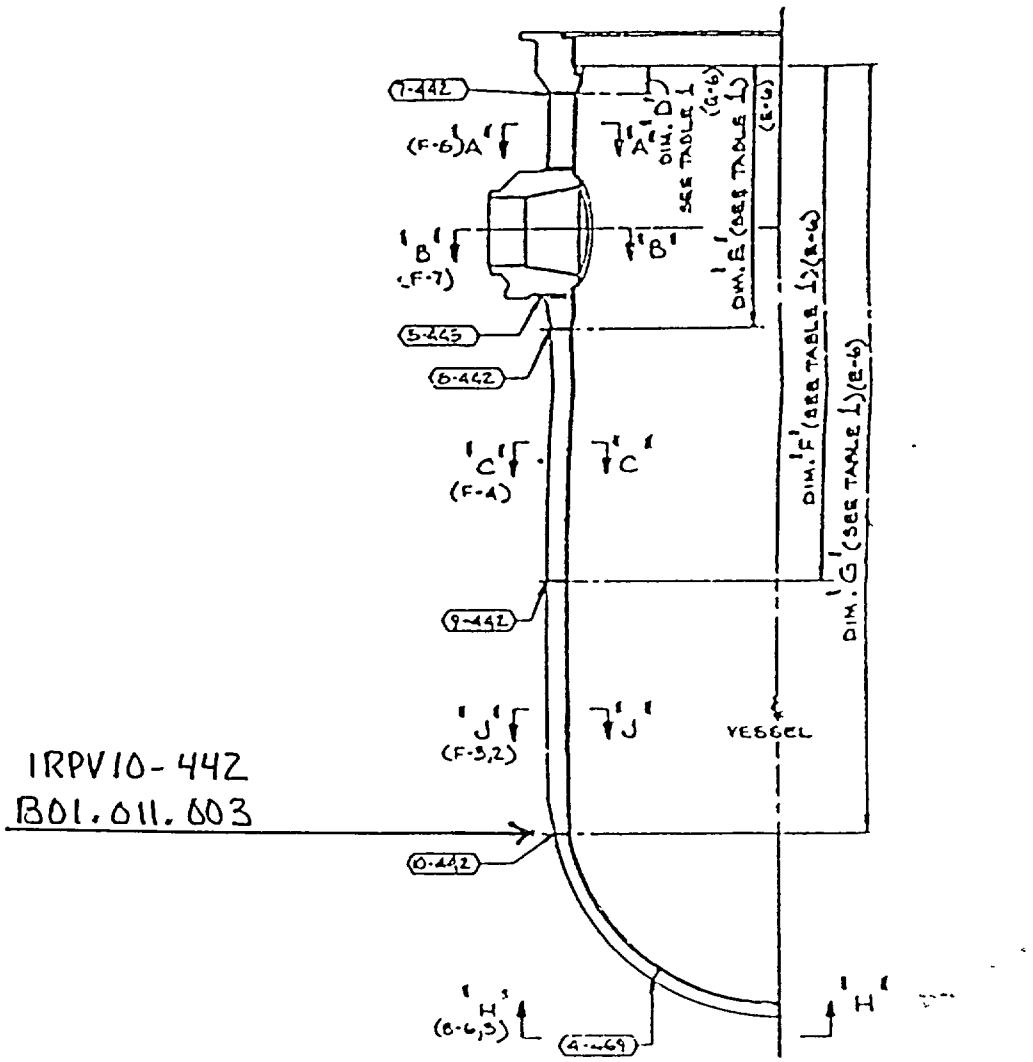

PRESSURE VESSEL ASSEMBLY

SCALE: 3/8" = 1'-0"

McGUIRE UNIT 1 REACTOR VESSEL

FOR INFORMATION ONLY

McGUIRE-1 APPENDIX VIII
EXAMINATION COVERAGE FOR WELD: W13
LOWER SHELL-TO-BOTTOM HEAD

McGUIRE-1 WELD NO.: 1RPV 10-442
B01.011.003

SCAN PLAN DRAWING NO.: 6005116E-03

AGGREGATE COVERAGE OBTAINED: 69%

Zone Coverage Obtained

Weld 67% Adjacent Base Metal. 70%

Examination Volume Definition

Weld Length: 543 5 in.

Area Measurement		Volume Calculation	
Weld Near Surface	0 88 sq in.	Weld Near Surface	478 3 cu. in
Weld: Balance of Volume	4.94 sq in.	Weld Balance of Volume	2684.9 cu. in.
Base Metal. Near Surface	7.86 sq in	Base Metal Near Surface	4271.9 cu. in
Base Metal. Balance of Volume	38.24 sq in.	Base Metal· Balance of Volume	20783.4 cu. in

Examination Coverage Calculations

WELD

Weld (Near Surface Region B-C-H-I)

Entry #	Exam Angle (deg.)	Beam Direction	Area Examined (sq. in)	Length Examined (in.)	Volume Examined (cu in.)	Volume Required (cu in.)	Percent Examined	
1	70L	11	0 88	307.00	270 2	270.2	100%	BETWEEN LUGS
2	70L	12	0 88	307.00	270 2	270 2	100%	BETWEEN LUGS
3	70L	3	0 88	307.00	270 2	270 2	100%	BETWEEN LUGS
4	70L	4	0 88	307.00	270 2	270 2	100%	BETWEEN LUGS
5	70L	11	0 00	236 50	0 0	208 1	0%	UNDER LUGS
6	70L	12	0 78	236.50	184 5	208 1	89%	UNDER LUGS
7	70L	3	0 00	236 50	0.0	208 1	0%	UNDER LUGS
8	70L	4	0 00	236 50	0 0	208 1	0%	UNDER LUGS
				Totals	*1265.1*	*1913 1*	*66%*	

Weld (Balance of Volume Region G-H-I-J)

Entry #	Exam. Angle (deg)	Beam Direction	Area Examined (sq in.)	Length Examined (in)	Volume Examined (cu in)	Volume Required (cu in)	Percent Examined	
1	45L	11	4.94	307.00	1516 6	1516 6	100%	BETWEEN LUGS
2	45L	12	4 94	307.00	1516 6	1516 6	100%	BETWEEN LUGS
3	45L	3	4 94	307.00	1516.6	1516 6	100%	BETWEEN LUGS
4	45L	4	4.94	307.00	1516 6	1516 6	100%	BETWEEN LUGS
5	45S	11	4 94	307.00	1516 6	1516 6	100%	BETWEEN LUGS
6	45S	12	4 94	307.00	1516 6	1516 6	100%	BETWEEN LUGS
7	45S	3	4 94	307.00	1516 6	1516 6	100%	BETWEEN LUGS
8	45S	4	4 94	307.00	1516 6	1516 6	100%	BETWEEN LUGS
9	45L	11	4 94	236 50	1168 3	1168 3	100%	UNDER LUGS
10	45L	12	0 00	236 50	0 0	1168 3	0%	UNDER LUGS
11	45L	3	0 00	236 50	0 0	1168 3	0%	UNDER LUGS
12	45L	4	0 00	236 50	0 0	1168 3	0%	UNDER LUGS
13	45S	11	4 94	236 50	1168 3	1168 3	100%	UNDER LUGS
14	45S	12	0 00	236 50	0 0	1168 3	0%	UNDER LUGS
15	45S	3	0 00	236 50	0 0	1168 3	0%	UNDER LUGS
16	45S	4	0 00	236 50	0 0	1168 3	0%	UNDER LUGS
				Totals	*14469 3*	*21479 1*	*67%*	

AS-SCANNED DUE TO SST INSERT PROTRUSION NOT SHOWN ON DETAIL DRAWINGS

BASE METAL

W-13 SHEET - 2

Adjacent Base Metal (Near Surface Region A-B-I-L and C-D-E-H)

Entry #	Exam Angle (deg)	Beam Direction	Area Examined (sq in.)	Length Examined (in)	Volume Examined (cu in)	Volume Required (cu in)	Percent Examined	
1	70L	11	7.86	307.00	2413 0	2413 0	100%	BETWEEN LUGS
2	70L	3	7.86	307.00	2413 0	2413 0	100%	BETWEEN LUGS
3	70L	4	7.86	307.00	2413 0	2413 0	100%	BETWEEN LUGS
4	70L	11	3.29	236 50	778 1	1858 9	42%	UNDER LUGS
5	70L	3	1.76	236 50	416 2	1858.9	22%	UNDER LUGS
6	70L	4	0 00	236 50	0 0	1858 9	0%	UNDER LUGS
				Totals·	*8433 4*	*12815 7*	*66%*	

Adjacent Base Metal (Balance of Volume Region E-F-G-H and I-J-K-L)

Entry #	Exam Angle (deg)	Beam Direction	Area Examined (sq in)	Length Examined (in)	Volume Examined (cu in)	Volume Required (cu in.)	Percent Examined	
1	45L	11	38 24	307.00	11739 7	11739 7	100%	BETWEEN LUGS
2	45L	3	38.24	307.00	11739 7	11739 7	100%	BETWEEN LUGS
3	45L	4	38.24	307.00	11739.7	11739.7	100%	BETWEEN LUGS
4	45S	11	38.24	307.00	11739 7	11739.7	100%	BETWEEN LUGS
5	45S	3	38.24	307.00	11739.7	11739.7	100%	BETWEEN LUGS
6	45S	4	38.24	307.00	11739.7	11739.7	100%	BETWEEN LUGS
7	45L	11	25.12	236.50	5940 9	9043 8	66%	UNDER LUGS
8	45L	3	11.05	236 50	2613 3	9043 8	29%	UNDER LUGS
9	45L	4	0 00	236 50	0 0	9043 8	0%	UNDER LUGS
10	45S	11	25.12	236.50	5940.9	9043.8	66%	UNDER LUGS
11	45S	3	11.05	236.50	2613 3	9043.8	29%	UNDER LUGS
12	45S	4	0 00	236.50	0.0	9043.8	0%	UNDER LUGS
				Totals·	*87546 5*	*124700 6*	*70%*	

AS-SCANNED DUE TO SST INSERT PROTRUSION NOT SHOWN ON DETAIL DRAWINGS

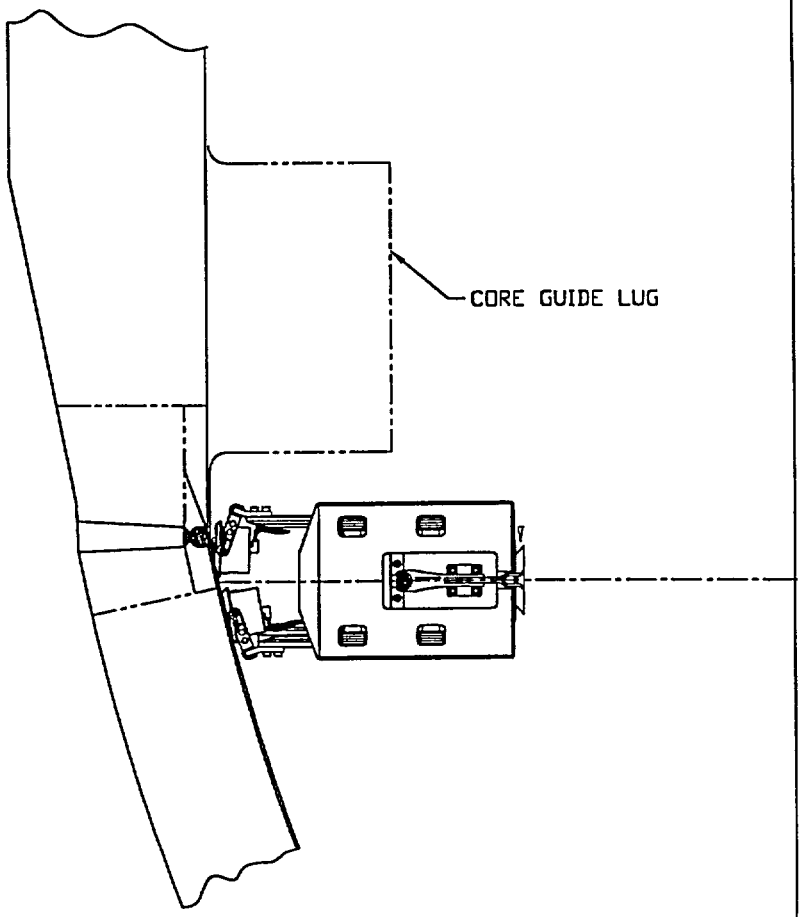

UNDER LUGS

WELD (NEAR SURFACE)
AXIAL SCAN
70°L
0.78 SQ IN.

AS-SCANNED DUE TO SST
INSERT PROTRUSION NOT
SHOWN ON DESIGN DWGS

APPENDIX VIII
W13
1RPV 10-442
B01.011.003

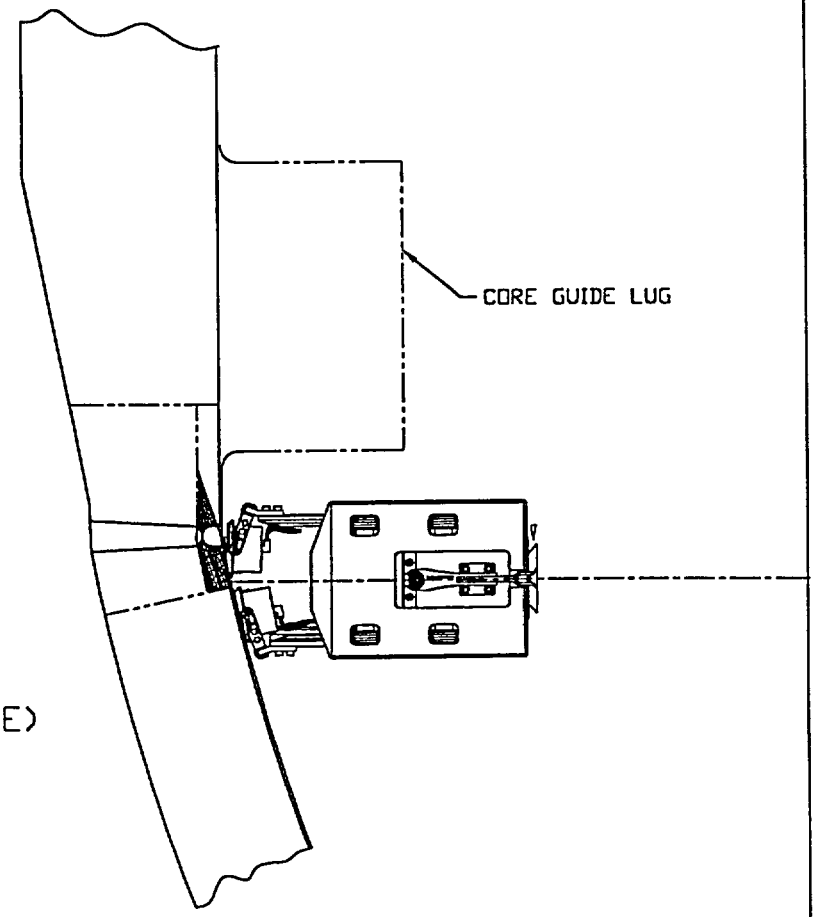

UNDER LUGS

BASE METAL (NEAR SURFACE)
AXIAL SCAN
70°L
3.29 SQ IN.

AS-SCANNED DUE TO SST
INSERT PROTRUSION NOT
SHOWN ON DESIGN DWGS

APPENDIX VIII
W13
1RPV 10-442
B01.011.003

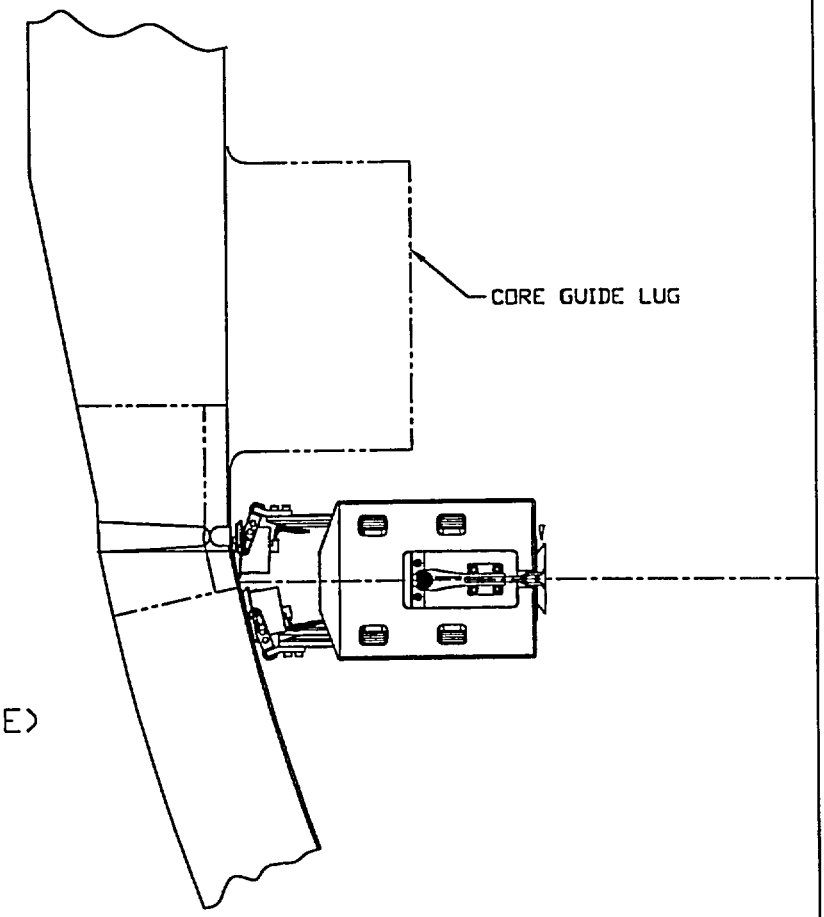

UNDER LUGS

WELD (BALANCE OF VOLUME)
CIRC SCAN
45°L&45°S
0.00 SQ IN.

AS-SCANNED DUE TO SST
INSERT PROTRUSION NOT
SHOWN ON DESIGN DWGS

APPENDIX VIII
W13
1RPV 10-442
B01.011.003

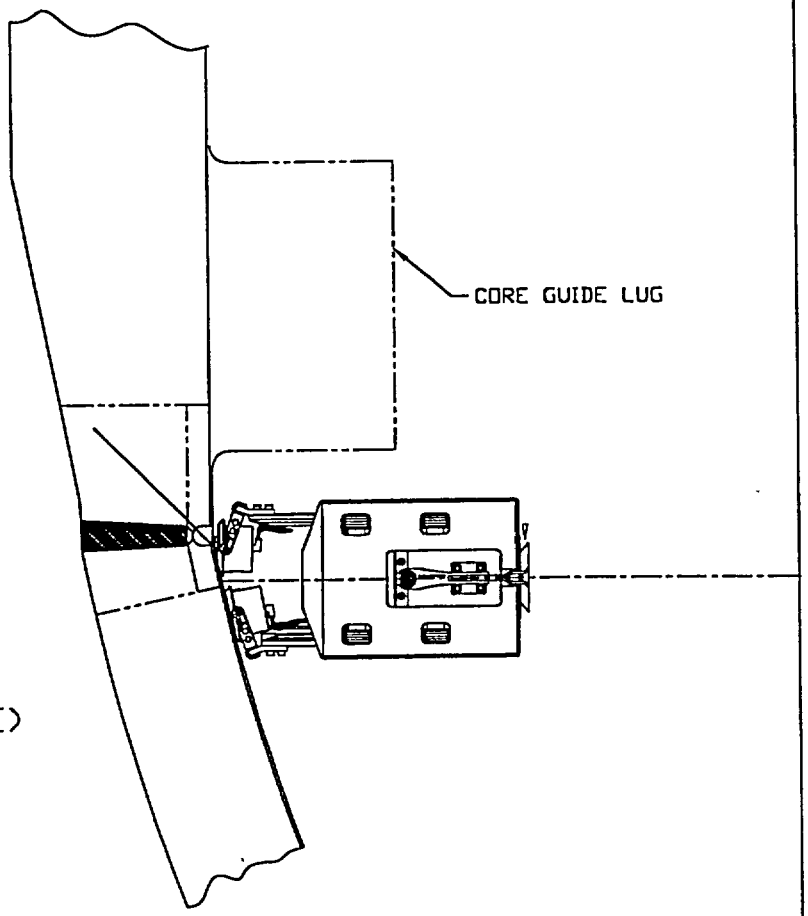

UNDER LUGS

WELD (BALANCE OF VOLUME)
AXIAL SCAN
45°L&45°S
4.94 SQ IN.

APPENDIX VIII
W13
1RPV 10-442
B01.011.003

AS-SCANNED DUE TO SST
INSERT PROTRUSION NOT
SHOWN ON DESIGN DWGS

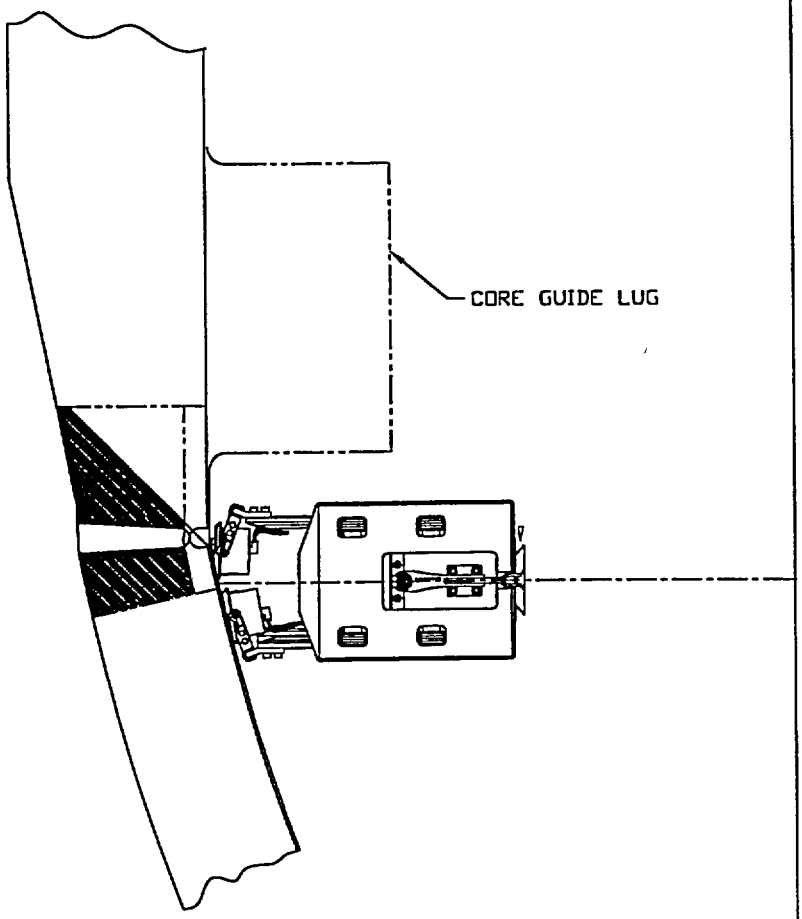

UNDER LUGS

BASE METAL (BALANCE OF VOLUME)
AXIAL SCAN
45°L&45°S
25.12 SQ IN.

AS-SCANNED DUE TO SST INSERT PROTRUSION NOT SHOWN ON DESIGN DWGS

APPENDIX VIII
W13
1RPV 10-442
B01.011.003

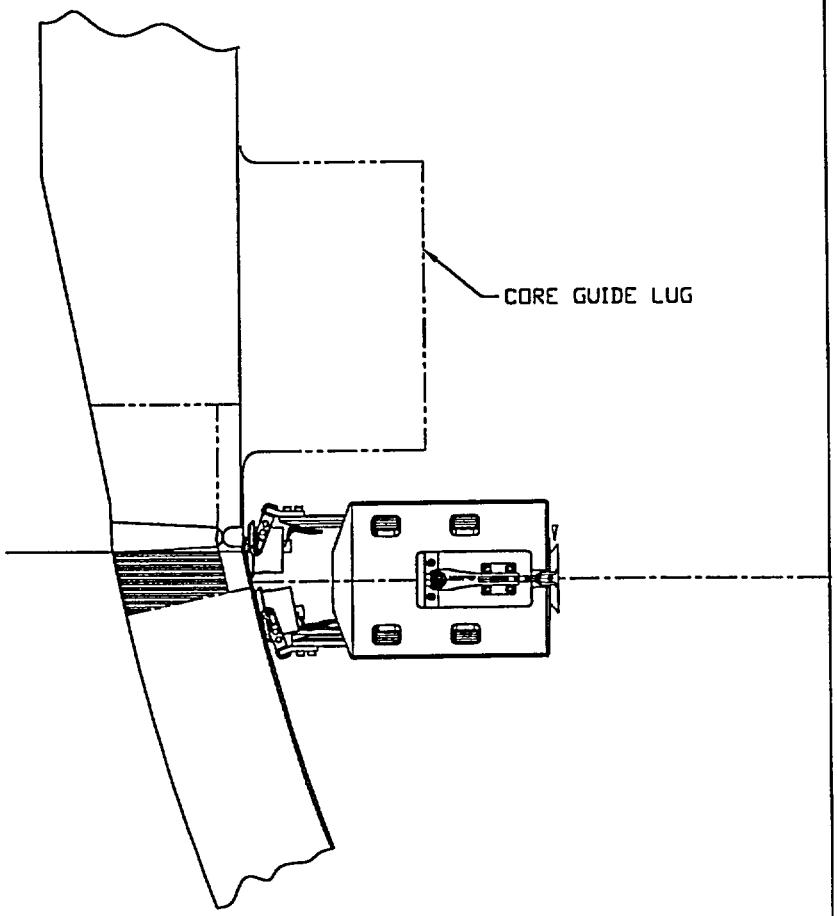

UNDER LUGS

BASE METAL (BALANCE OF VOLUME)
CIRC SCAN
45°L&45°S
11.05 SQ IN.

AS-SCANNED DUE TO SST INSERT PROTRUSION NOT SHOWN ON DESIGN DWGS

APPENDIX VIII
W13
1RPV 10-442
B01.011.003

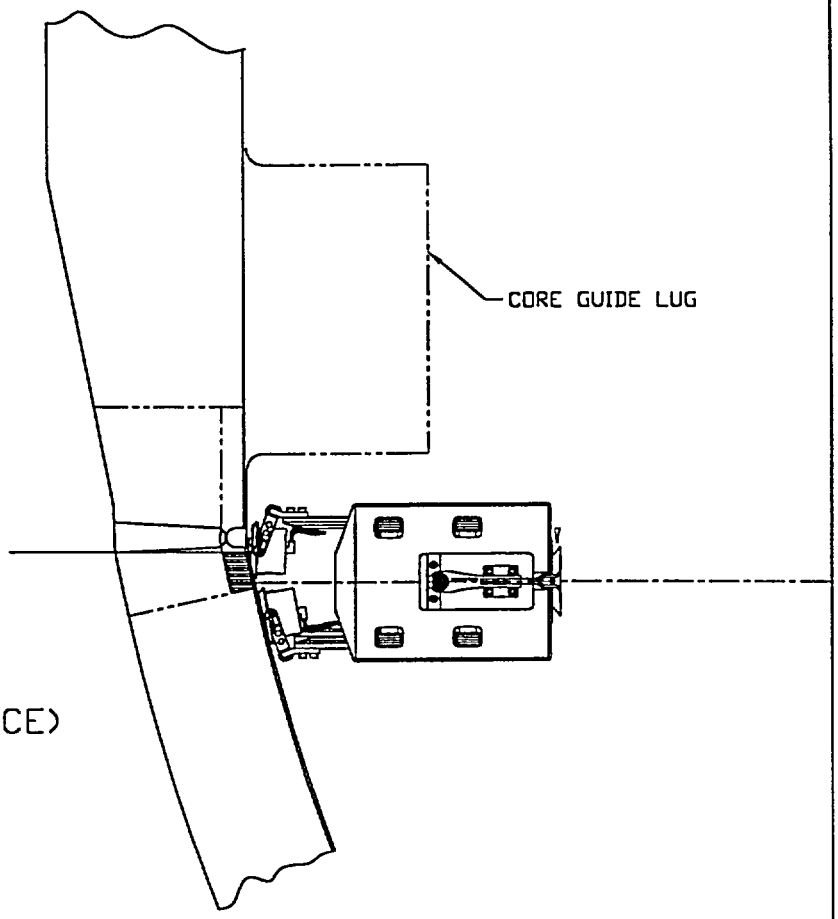

UNDER LUGS

BASE METAL (NEAR SURFACE)
CIRC SCAN
70°L
1.76 SQ IN.

AS-SCANNED DUE TO SST
INSERT PROTRUSION NOT
SHOWN ON DESIGN DWGS

APPENDIX VIII
W13
1RPV 10-442
B01.011.003

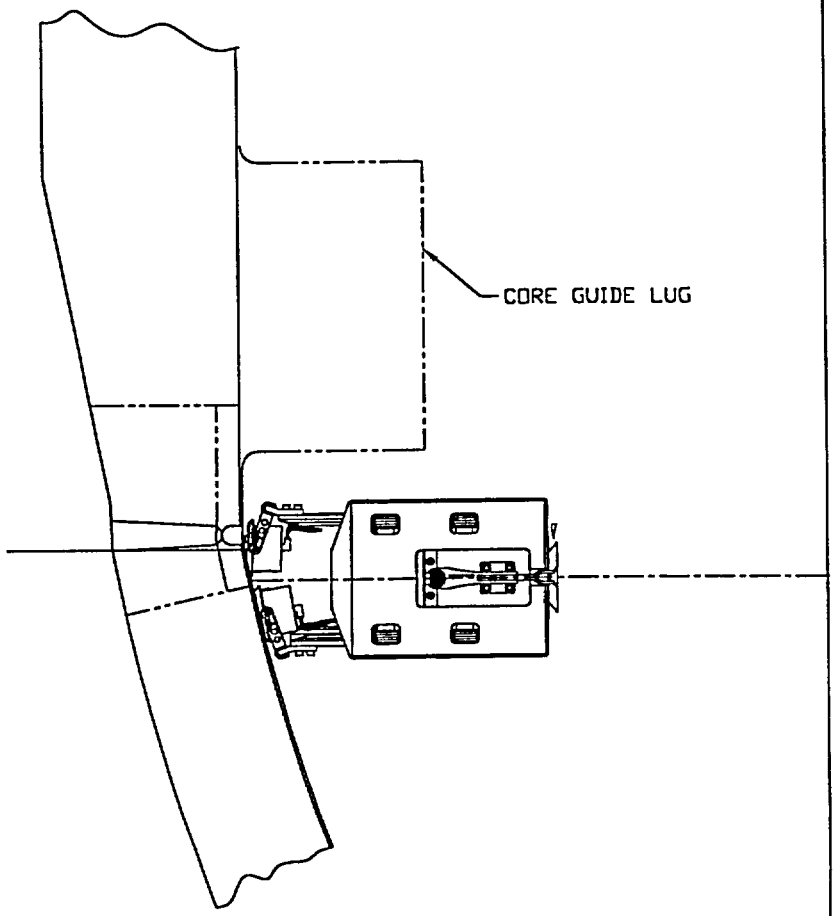

UNDER LUGS

WELD (NEAR SURFACE)
CIRC SCAN
70°L
0.00 SQ IN.

AS-SCANNED DUE TO SST
INSERT PROTRUSION NOT
SHOWN ON DESIGN DWGS

APPENDIX VIII
W13
1RPV 10-442
B01.011.003

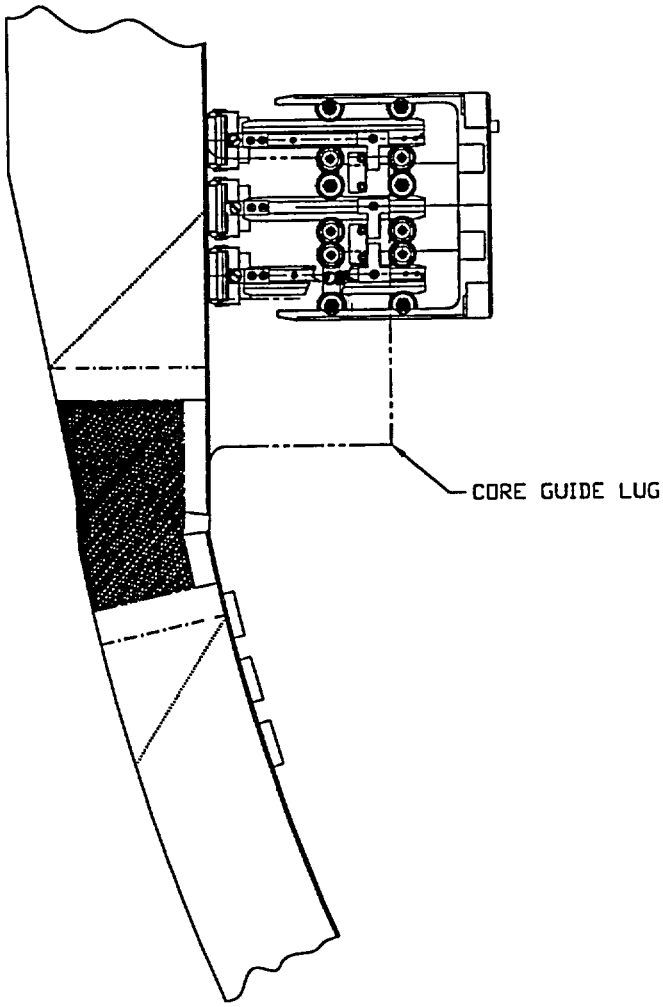

W13
45°L
WELD AREA (BALANCE OF VOLUME) =4.94 SQ IN.
BASE METAL (BALANCE OF VOLUME) =38.24 SQ IN.

APPENDIX VIII
W13
1RPV 10-442
B01.011.003

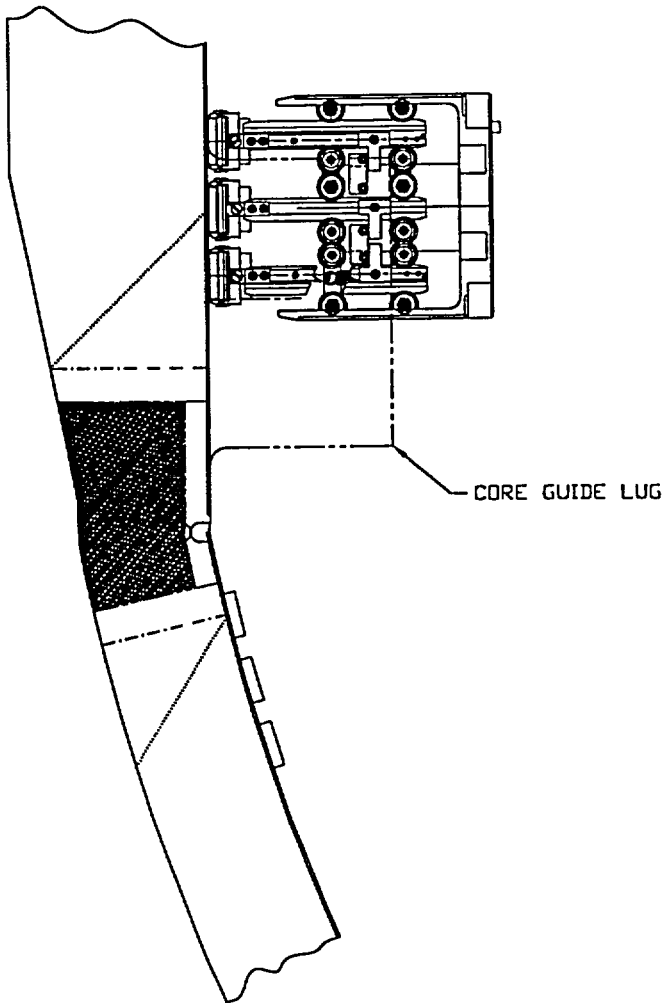

W13
45°S
WELD AREA (BALANCE OF VOLUME) =4.94 SQ IN.
BASE METAL (BALANCE OF VOLUME) =38.24 SQ IN.

APPENDIX VIII
W13
1RPV 10-442
B01.011.003

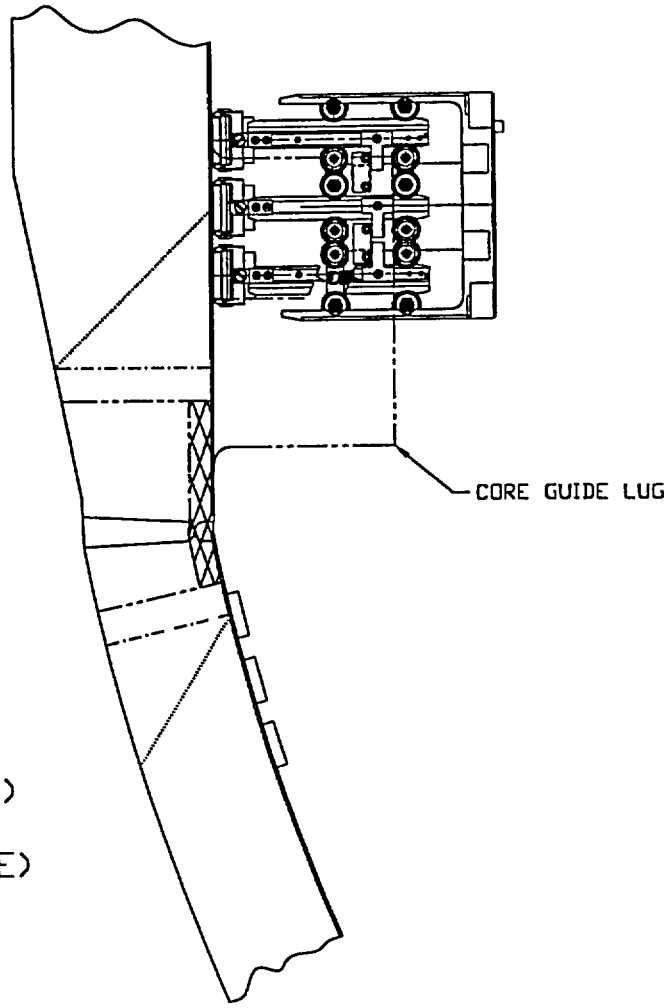

W13
70°
WELD AREA (NEAR SURFACE)
=0.88 SQ IN.
BASE METAL (NEAR SURFACE)
=7.86 SQ IN.

APPENDIX VIII
W13
1RPV 10-442
B01.011.003

REVISIONS			
REV	DESCRIPTION	DATE	APPROVAL
3	FINAL REPORT-AS SCANNED LIMITED DUE TO SST INSERT PROTRUSION NOT SHOWN ON DETAIL DRAWINGS.	4/9 2001	R.H.RHODES M.G.HACKER

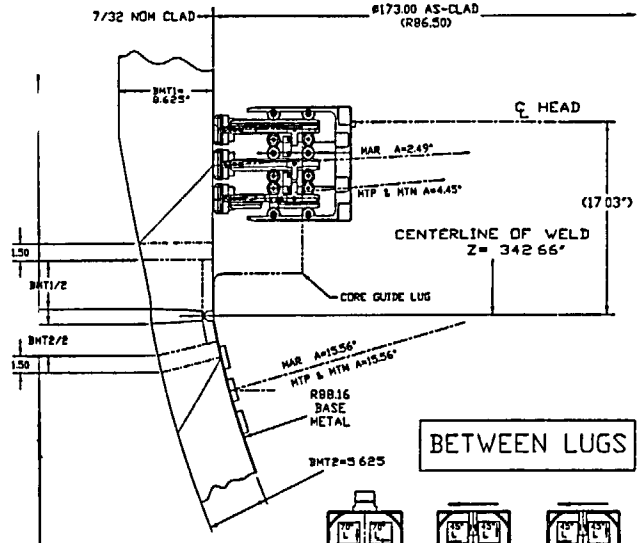

BETWEEN LUGS

THIS VIEW DEPICTS THETA (CIRC) SCANS AND ALPHA (AXIAL) SCANS FIRING DOWNWARD

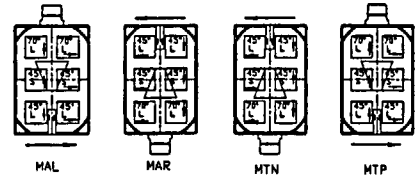

HEAD ORIENTATION FOR VARIOUS SCANS

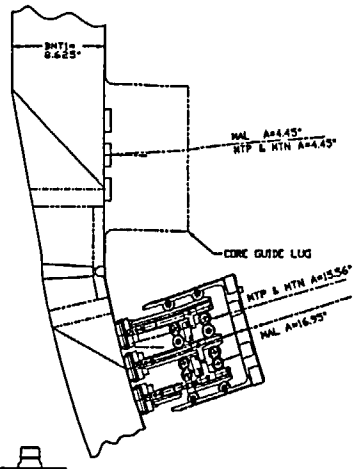

THIS VIEW DEPICTS THETA (CIRC) SCANS AND ALPHA (AXIAL) SCANS FIRING UPWARD

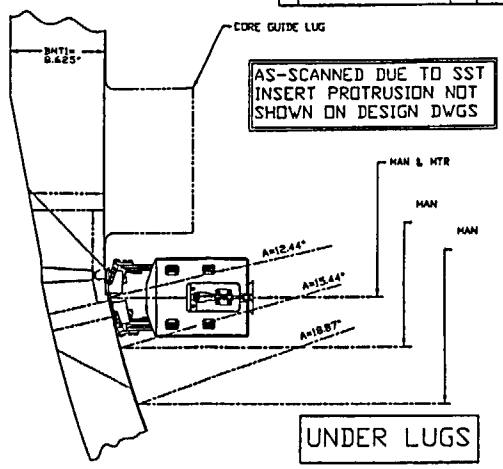

AS-SCANNED DUE TO SST INSERT PROTRUSION NOT SHOWN ON DESIGN DWGS

UNDER LUGS

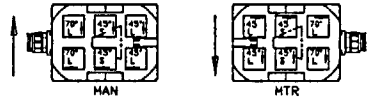

HEAD ORIENTATION FOR VARIOUS SCANS

SCAN INDEX = 0.50" FOR DETECTION
= 0.20" FOR SIZING

APPENDIX VIII
W13
1RPV 10-442
B01.011.003

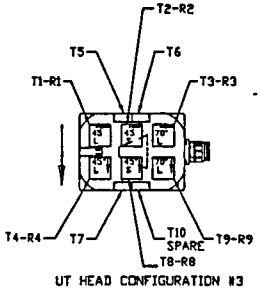

UT HEAD CONFIGURATION #3
2x3 UT HEAD CONFIGURATION
FOR APPENDIX VIII SHELL SCANS
AS VIEWED FROM V-BLOCK ATTACHMENT SIDE

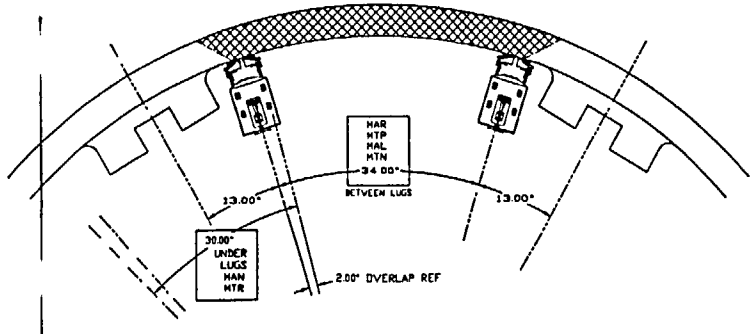

NOTE: THIS PARTIAL PLAN VIEW IS 1/8 SCALE

GEOMETRY IN THE E-FILE IS 1/2 FULL SIZE

DRAWN R.H.RHODES	McGUIRE-1 10 YEAR RV ISI LWR SHELL-TO-BOTTOM HEAD-URSULA EXAM SHEET 6 OF 11	SCALE 1/4	
CHECKED R.H.RHODES			
APPROVED M.G.HACKER		DRAWING NO. 6005116	REV. E 3

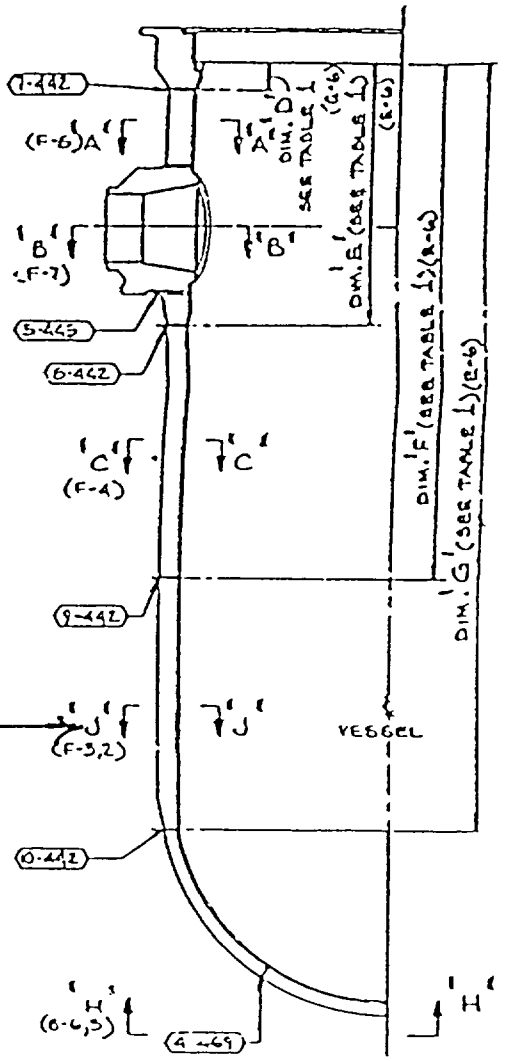

SEE PAGE 2

1RPV3-442A
1RPV3-442B
1RPV3-442C

PRESSURE VESSEL ASSEMBLY

SCALE. 3/8"-1'-0"

McGUIRE UNIT 1 REACTOR VESSEL

FOR INFORMATION ONLY

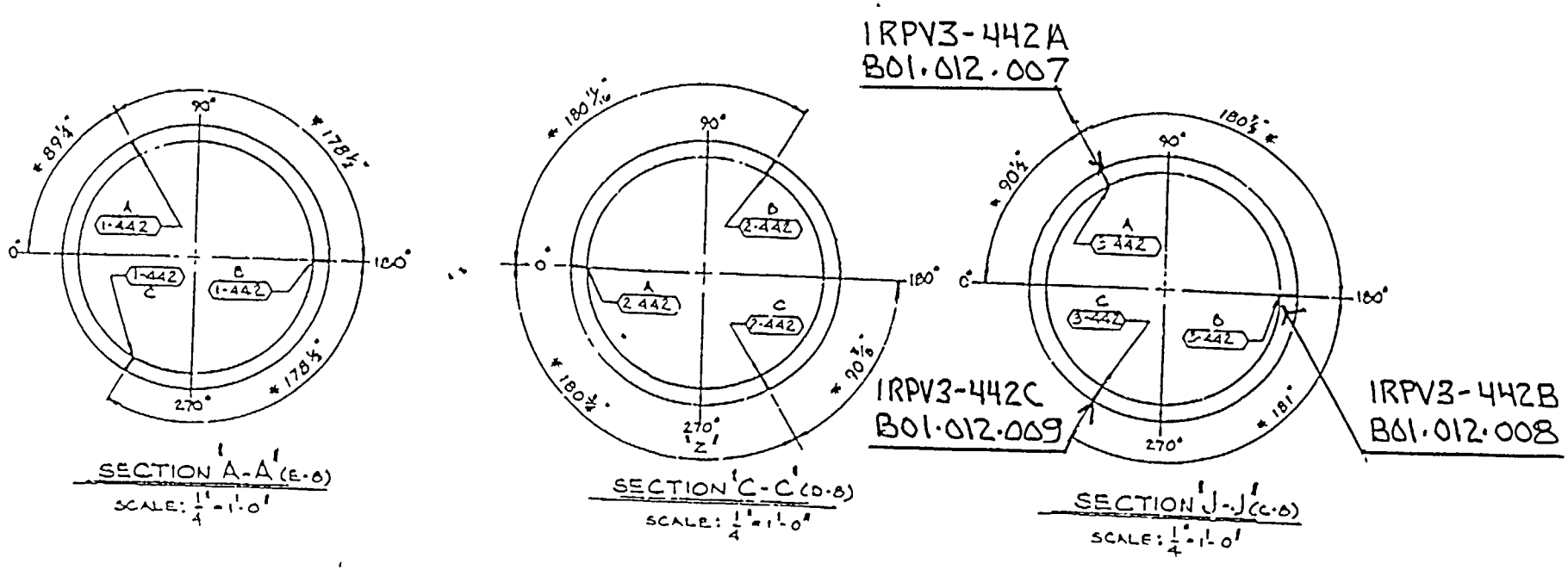

NOTE: * ARC LENGTH MEASURED ON I.D. OF VESSEL SURFACE.

McGUIRE UNIT 1 REACTOR VESSEL
"LONGITUDINAL SHELL WELDS"
FOR INFORMATION ONLY

ATTACHMENT 2
PAGE 3 OF 6

McGUIRE-1 APPENDIX VIII
EXAMINATION COVERAGE FOR WELD: W09
LOWER LONG SEAM @ 60 DEGREES

McGUIRE-1 WELD NO.: 1RPV 3-442A
B01 012.007
SCAN PLAN DRAWING NO.: 6005118E-03
AGGREGATE COVERAGE OBTAINED: 79%

Zone Coverage Obtained

Weld: 79% Adjacent Base Metal 79%

Examination Volume Definition

Weld Length: 97 5 in

Area Measurement		Volume Calculation	
Weld Near Surface	1 58 sq in	Weld. Near Surface	154 1 cu in
Weld: Balance of Volume	9 8 sq in.	Weld: Balance of Volume	955 5 cu. in.
Base Metal Near Surface	8 71 sq in.	Base Metal. Near Surface	849 2 cu in
Base Metal Balance of Volume	70 87 sq in.	Base Metal Balance of Volume	6909 8 cu in

Examination Coverage Calculations

WELD

Weld (Near Surface Region B-C-H-I)

Entry #	Exam. Angle (deg)	Beam Direction	Area Examined (sq in.)	Length Examined (in.)	Volume Examined (cu in)	Volume Required (cu in.)	Percent Examined
1	70L	1	1 58	77.5	122.5	122 5	100%
2	70L	1	0 00	20 0	0 0	31 6	0%
3	70L	2	1.58	77 5	122 5	122 5	100%
4	70L	2	0 00	20 0	0 0	31 6	0%
5	70L	3	1 58	77 5	122 5	122 5	100%
6	70L	3	0 00	20 0	0 0	31 6	0%
7	70L	4	1 58	77 5	122 5	122 5	100%
8	70L	4	0 00	20 0	0 0	31 6	0%
				Totals	*489 8*	*616 2*	*79%*

Weld (Balance of Volume Region G-H-I-J)

Entry #	Exam. Angle (deg)	Beam Direction	Area Examined (sq in.)	Length Examined (in)	Volume Examined (cu in.)	Volume Required (cu in.)	Percent Examined
1	45L	1	9 80	77 5	759 5	759 5	100%
2	45L	1	0 00	20 0	0 0	196 0	0%
3	45L	2	9 80	77 5	759 5	759 5	100%
4	45L	2	0 00	20 0	0 0	196 0	0%
5	45L	3	9 80	77 5	759 5	759 5	100%
6	45L	3	0 00	20 0	0 0	196 0	0%
7	45L	4	9 80	77 5	759 5	759 5	100%
8	45L	4	0 00	20 0	0 0	196 0	0%
9	45S	1	9 80	77.5	759 5	759 5	100%
10	45S	1	0 00	20 0	0 0	196 0	0%
11	45S	2	9 80	77 5	759 5	759 5	100%
12	45S	2	0 00	20 0	0 0	196 0	0%
13	45S	3	9 80	77 5	759 5	759 5	100%
14	45S	3	0 00	20 0	0 0	196 0	0%
15	45S	4	9 80	77 5	759 5	759 5	100%
16	45S	4	0 00	20 0	0 0	196 0	0%
				Totals	*6076 0*	*7644 0*	*79%*

BASE METAL

Adjacent Base Metal (Near Surface Region A-B-I-L and C-D-E-H)

Entry #	Exam. Angle (deg)	Beam Direction	Area Examined (sq in)	Length Examined (in)	Volume Examined (cu in.)	Volume Required (cu in)	Percent Examined
1	70L	1	8 71	77.5	675 0	675 0	100%
2	70L	1	0 00	20 0	0 0	174 2	0%
3	70L	3	8 71	77 5	675 0	675 0	100%
4	70L	3	0 00	20 0	0 0	174 2	0%
5	70L	4	8 71	77 5	675 0	675 0	100%
6	70L	4	0 00	20 0	0 0	174 2	0%
				Totals	*2025 1*	*2547 7*	*79%*

Adjacent Base Metal (Balance of Volume Region E-F-G-H and I-J-K-L)

Entry #	Exam. Angle (deg)	Beam Direction	Area Examined (sq in)	Length Examined (in)	Volume Examined (cu in)	Volume Required (cu in)	Percent Examined
1	45L	1	70 87	77 5	5492 4	5492 4	100%
2	45L	1	0 00	20 0	0 0	1417 4	0%
3	45L	3	70 87	77 5	5492 4	5492 4	100%
4	45L	3	0 00	20 0	0 0	1417 4	0%
5	45L	4	70 87	77 5	5492 4	5492 4	100%
6	45L	4	0 00	20 0	0 0	1417 4	0%
7	45S	1	70 87	77 5	5492 4	5492 4	100%
8	45S	1	0 00	20 0	0 0	1417 4	0%
9	45S	3	70 87	77 5	5492 4	5492 4	100%
10	45S	3	0 00	20 0	0 0	1417 4	0%
11	45S	4	70 87	77 5	5492 4	5492 4	100%
12	45S	4	0 00	20 0	0 0	1417 4	0%
				Totals	*32954 6*	*41459 0*	*79%*

AS-SCANNED DUE TO SST INSERT PROTRUSION NOT SHOWN ON DETAIL DRAWINGS

McGUIRE-1 APPENDIX VIII
EXAMINATION COVERAGE FOR WELD: W10
LOWER LONG SEAM @ 180 DEGREES

McGUIRE-1 WELD NO.: 1RPV 3-442B
B01 012.008
SCAN PLAN DRAWING NO.: 6005118E-03

AGGREGATE COVERAGE OBTAINED: 79%

Zone Coverage Obtained

Weld 79% Adjacent Base Metal 79%

Examination Volume Definition

Weld Length. 97 5 in.

Area Measurement		Volume Calculation	
Weld Near Surface	1 58 sq in.	Weld. Near Surface	154 1 cu in
Weld: Balance of Volume	9 8 sq in.	Weld. Balance of Volume	955 5 cu in
Base Metal Near Surface	8 71 sq in.	Base Metal Near Surface	849.2 cu in.
Base Metal Balance of Volume	70 87 sq in.	Base Metal Balance of Volume	6909 8 cu in.

Examination Coverage Calculations

WELD

Weld (Near Surface Region B-C-H-I)

Entry #	Exam Angle (deg)	Beam Direction	Area Examined (sq in.)	Length Examined (in)	Volume Examined (cu. in.)	Volume Required (cu in)	Percent Examined
1	70L	1	1 58	77 5	122.5	122.5	100%
2	70L	1	0 00	20 0	0 0	31 6	0%
3	70L	2	1.58	77 5	122 5	122 5	100%
4	70L	2	0 00	20 0	0 0	31 6	0%
5	70L	3	1.58	77 5	122 5	122 5	100%
6	70L	3	0 00	20 0	0 0	31 6	0%
7	70L	4	1 58	77 5	122 5	122 5	100%
8	70L	4	0 00	20 0	0 0	31 6	0%
				Totals	*489 8*	*616 2*	*79%*

Weld (Balance of Volume Region G-H-I-J)

Entry #	Exam Angle (deg)	Beam Direction	Area Examined (sq in)	Length Examined (in)	Volume Examined (cu in.)	Volume Required (cu in.)	Percent Examined
1	45L	1	9 80	77 5	759 5	759 5	100%
2	45L	1	0 00	20 0	0 0	196 0	0%
3	45L	2	9 80	77 5	759 5	759 5	100%
4	45L	2	0 00	20 0	0 0	196 0	0%
5	45L	3	9 80	77 5	759 5	759 5	100%
6	45L	3	0 00	20 0	0 0	196 0	0%
7	45L	4	9 80	77 5	759 5	759 5	100%
8	45L	4	0 00	20 0	0 0	196 0	0%
9	45S	1	9 80	77 5	759 5	759 5	100%
10	45S	1	0 00	20 0	0 0	196 0	0%
11	45S	2	9 80	77.5	759 5	759 5	100%
12	45S	2	0 00	20 0	0 0	196 0	0%
13	45S	3	9 80	77 5	759 5	759 5	100%
14	45S	3	0 00	20 0	0 0	196 0	0%
15	45S	4	9 80	77 5	759 5	759 5	100%
16	45S	4	0 00	20 0	0 0	196 0	0%
				Totals	*6076 0*	*7644 0*	*79%*

BASE METAL

Adjacent Base Metal (Near Surface Region A-B-I-L and C-D-E-H)

Entry #	Exam Angle (deg)	Beam Direction	Area Examined (sq in.)	Length Examined (in)	Volume Examined (cu in)	Volume Required (cu in)	Percent Examined
1	70L	1	8 71	77 5	675 0	675 0	100%
2	70L	1	0 00	20 0	0 0	174.2	0%
3	70L	3	8 71	77 5	675 0	675 0	100%
4	70L	3	0 00	20 0	0 0	174 2	0%
5	70L	4	8 71	77 5	675 0	675 0	100%
6	70L	4	0 00	20 0	0 0	174.2	0%
				Totals	*2025 1*	*2547 7*	*79%*

Adjacent Base Metal (Balance of Volume Region E-F-G-H and I-J-K-L)

Entry #	Exam Angle (deg)	Beam Direction	Area Examined (sq in)	Length Examined (in)	Volume Examined (cu in)	Volume Required (cu in)	Percent Examined
1	45L	1	70 87	77 5	5492 4	5492 4	100%
2	45L	1	0 00	20 0	0 0	1417 4	0%
3	45L	3	70 87	77 5	5492 4	5492 4	100%
4	45L	3	0 00	20 0	0 0	1417 4	0%
5	45L	4	70 87	77.5	5492 4	5492 4	100%
6	45L	4	0 00	20 0	0 0	1417 4	0%
7	45S	1	70 87	77 5	5492 4	5492 4	100%
8	45S	1	0 00	20 0	0 0	1417 4	0%
9	45S	3	70 87	77 5	5492 4	5492 4	100%
10	45S	3	0 00	20 0	0 0	1417 4	0%
11	45S	4	70 87	77 5	5492 4	5492 4	100%
12	45S	4	0 00	20 0	0 0	1417 4	0%
				Totals	*32954 6*	*41459 0*	*79%*

AS-SCANNED DUE TO SST INSERT PROTRUSION NOT SHOWN ON DETAIL DRAWINGS

ATTACHMENT 2
PAGE 5 OF 6

McGUIRE-1 APPENDIX VIII
EXAMINATION COVERAGE FOR WELD: W11
LOWER LONG SEAM @ 300 DEGREES

McGUIRE-1 WELD NO.: 1RPV 3-442C
B01.012.009
SCAN PLAN DRAWING NO.: 6005118E-03

AGGREGATE COVERAGE OBTAINED: 79%

Zone Coverage Obtained

Weld 79% Adjacent Base Metal 79%

Examination Volume Definition

Weld Length 97 5 in

Area Measurement		Volume Calculation	
Weld Near Surface	1 58 sq. in.	Weld Near Surface	154 1 cu in.
Weld Balance of Volume	9 8 sq in.	Weld Balance of Volume	955 5 cu. in.
Base Metal Near Surface	8 71 sq in.	Base Metal Near Surface	849.2 cu. in.
Base Metal Balance of Volume	70 87 sq in	Base Metal Balance of Volume	6909 8 cu. in.

Examination Coverage Calculations

WELD

Weld (Near Surface Region B-C-H-I)

Entry #	Exam. Angle (deg)	Beam Direction	Area Examined (sq in.)	Length Examined (in)	Volume Examined (cu in)	Volume Required (cu in)	Percent Examined
1	70L	1	1 58	77 5	122 5	122.5	100%
2	70L	1	0 00	20 0	0 0	31 6	0%
3	70L	2	1 58	77 5	122 5	122 5	100%
4	70L	2	0 00	20 0	0 0	31 6	0%
5	70L	3	1 58	77 5	122 5	122 5	100%
6	70L	3	0 00	20 0	0 0	31 6	0%
7	70L	4	1.58	77 5	122.5	122 5	100%
8	70L	4	0 00	20 0	0 0	31 6	0%
				Totals.	*489 8*	*616 2*	*79%*

Weld (Balance of Volume Region G-H-I-J)

Entry #	Exam. Angle (deg)	Beam Direction	Area Examined (sq in.)	Length Examined (in)	Volume Examined (cu. in)	Volume Required (cu in)	Percent Examined
1	45L	1	9 80	77.5	759 5	759 5	100%
2	45L	1	0 00	20 0	0 0	196 0	0%
3	45L	2	9 80	77 5	759 5	759 5	100%
4	45L	2	0 00	20 0	0 0	196 0	0%
5	45L	3	9 80	77 5	759 5	759 5	100%
6	45L	3	0 00	20 0	0 0	196 0	0%
7	45L	4	9 80	77 5	759 5	759 5	100%
8	45L	4	0 00	20 0	0 0	196 0	0%
9	45S	1	9 80	77 5	759 5	759 5	100%
10	45S	1	0 00	20 0	0 0	196 0	0%
11	45S	2	9 80	77 5	759 5	759 5	100%
12	45S	2	0 00	20 0	0 0	196 0	0%
13	45S	3	9 80	77 5	759 5	759 5	100%
14	45S	3	0 00	20 0	0 0	196 0	0%
15	45S	4	9 80	77 5	759 5	759 5	100%
16	45S	4	0 00	20 0	0 0	196 0	0%
				Totals	*6076 0*	*7644 0*	*79%*

BASE METAL

Adjacent Base Metal (Near Surface Region A-B-I-L and C-D-E-H)

Entry #	Exam Angle (deg)	Beam Direction	Area Examined (sq in)	Length Examined (in)	Volume Examined (cu in)	Volume Required (cu in)	Percent Examined
1	70L	1	8 71	77 5	675 0	675 0	100%
2	70L	1	0 00	20 0	0 0	174.2	0%
3	70L	3	8 71	77 5	675 0	675 0	100%
4	70L	3	0 00	20 0	0 0	174 2	0%
5	70L	4	8 71	77 5	675 0	675 0	100%
6	70L	4	0 00	20 0	0 0	174 2	0%
				Totals	*2025 1*	*2547 7*	*79%*

Adjacent Base Metal (Balance of Volume Region E-F-G-H and I-J-K-L)

Entry #	Exam Angle (deg)	Beam Direction	Area Examined (sq in)	Length Examined (in)	Volume Examined (cu in)	Volume Required (cu in)	Percent Examined
1	45L	1	70 87	77 5	5492 4	5492 4	100%
2	45L	1	0 00	20 0	0 0	1417 4	0%
3	45L	3	70 87	77 5	5492 4	5492 4	100%
4	45L	3	0 00	20 0	0 0	1417 4	0%
5	45L	4	70 87	77 5	5492 4	5492 4	100%
6	45L	4	0 00	20 0	0 0	1417 4	0%
7	45S	1	70 87	77 5	5492 4	5492 4	100%
8	45S	1	0 00	20 0	0 0	1417 4	0%
9	45S	3	70 87	77 5	5492 4	5492 4	100%
10	45S	3	0 00	20 0	0 0	1417 4	0%
11	45S	4	70 87	77 5	5492 4	5492 4	100%
12	45S	4	0 00	20 0	0 0	1417 4	0%
				Totals	*32954 6*	*41459 0*	*79%*

AS-SCANNED DUE TO SST INSERT PROTRUSION NOT SHOWN ON DETAIL DRAWINGS

ATTACHMENT 2
PAGE 6 OF 6

REVISIONS			
REV	DESCRIPTION	DATE	APPROVAL
3	FINAL REPORT-AS SCANNED- LIMITED ON LOWER LONG SEAMS DUE TO SST INSERT PROTRUSION NOT SHOWN ON DETAIL DRAWINGS.	4-9 2001	R.H.RHODES M.G.HACKER

REACTOR VESSEL COORDINATES

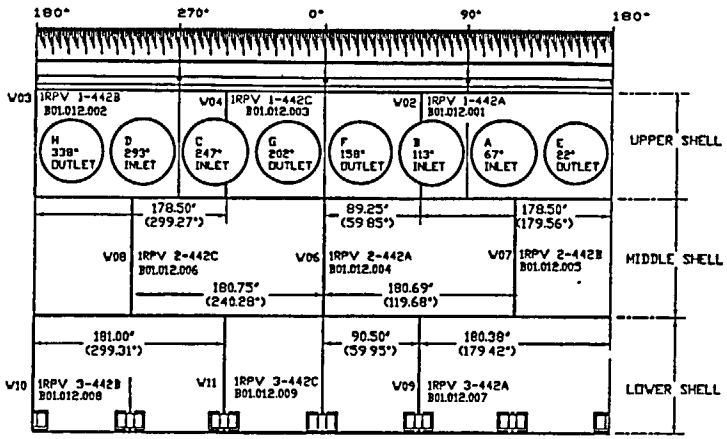

DEVELOPED VIEW SHOWING AS-BUILT DIMENSIONS
NOT TO SCALE

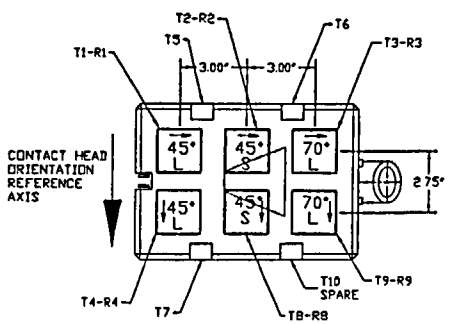

2x3 UT HEAD CONFIGURATION #3
FOR APPENDIX VIII SHELL SCANS
FROM VESSEL ID (AS VIEWED
FROM V-BLOCK ATTACHMENT
SIDE)

UPPER SHELL

60°
W02
1RPV 1-442A
B01 012 001
180°
W03
1RPV 1-442B
B01 012 002
300°
W04
1RPV 1-442C
B01 012 003

MIDDLE SHELL

0°
W06
1RPV 2-442A
B01.012.004
120°
W07
1RPV 2-442B
B01.012.005
240°
W08
1RPV 2-442C
B01.012.006

LOWER SHELL

60°
W09
1RPV 3-442A
B01.012 007
180°
W10
1RPV 3-442B
B01 012.008
300°
W11
1RPV 3-442C
B01 012 009

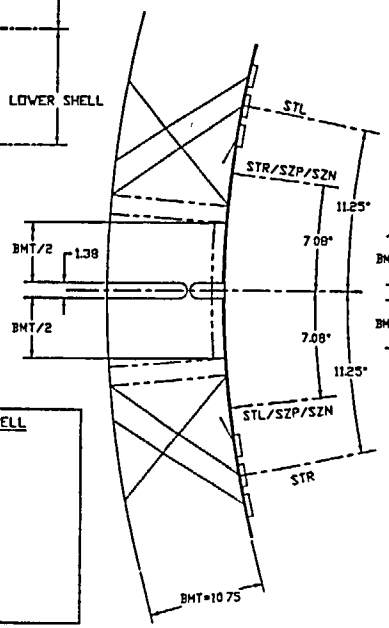

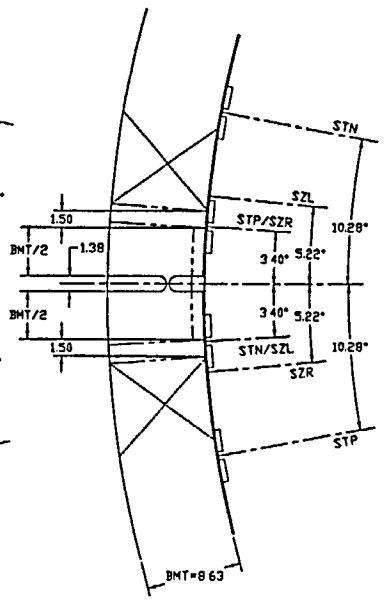

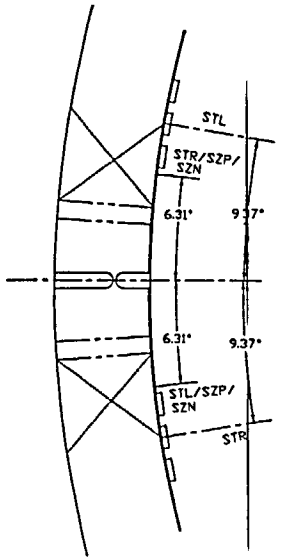

AS-SCANNED DUE TO SST INSERT PROTRUSION NOT SHOWN ON DESIGN DWGS

APPENDIX VIII

SCAN INDEX = 0.50" FOR DETECTION
0.20" FOR SIZING

R.H.RHODES
M.G.HACKER

McGUIRE-1
10 YEAR RV ISI
LONG SEAMS
URSULA EXAMINATION
SHEET 8 OF 11

6005118 E 3

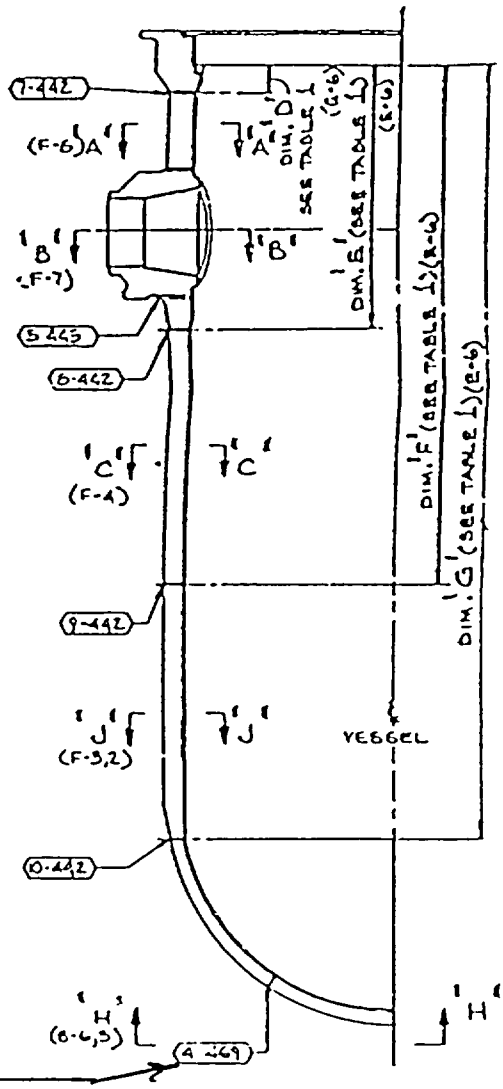

1RPV4-469
B01.021.002

PRESSURE VESSEL ASSEMBLY

SCALE: 3/8"-1'-0"

McGUIRE UNIT 1 REACTOR VESSEL

FOR INFORMATION ONLY

McGUIRE-1 APPENDIX VIII
EXAMINATION COVERAGE FOR WELD: W20
BOTTOM HEAD (CIRC)

McGUIRE-1 WELD NO.: 1RPV 4-469
B01.021.002

SCAN PLAN DRAWING NO.: 6005117E-03

AGGREGATE COVERAGE OBTAINED: 49%

Zone Coverage Obtained

Weld: 47% Adjacent Base Metal: 50%

Examination Volume Definition

Weld Length: 424.3 in

Area Measurement		Volume Calculation	
Weld: Near Surface	0.99 sq. in.	Weld: Near Surface	420.1 cu. in.
Weld: Balance of Volume	4.84 sq. in.	Weld. Balance of Volume	2053 6 cu. in.
Base Metal: Near Surface	5.90 sq. in.	Base Metal: Near Surface	2503.4 cu. in.
Base Metal: Balance of Volume	25.48 sq. in.	Base Metal: Balance of Volume	10811.2 cu. in.

Examination Coverage Calculations

WELD

Weld (Near Surface Region B-C-H-I)

Entry #	Exam. Angle (deg.)	Beam Direction	Area Examined (sq. in.)	Length Examined (in.)	Volume Examined (cu. in.)	Volume Required (cu. in.)	Percent Examined	
1	70L	11	0.99	232.58	230.3	230.3	100%	100% COVERAGE
2	70L	11	0.00	57.39	0.0	56.8	0%	NO COVERAGE
3	70L	11	0.99	58.90	58.3	58.3	100%	7.35 ALPHA
4	70L	11	0.99	75.43	74.7	74.7	100%	4 03 ALPHA
5	70L	12	0.99	143.53	142.1	142.1	100%	100% COVERAGE
6	70L	12	0.00	280.77	0.0	278.0	0%	NO COVERAGE
7	70L	3	0 99	159.31	157.7	157.7	100%	100% COVERAGE
8	70L	3	0.00	264.99	0.0	262.3	0%	NO COVERAGE
9	70L	4	0 99	156.06	154 5	154.5	100%	100% COVERAGE
10	70L	4	0.00	268 24	0 0	265.6	0%	NO COVERAGE
				Totals·	*817.6*	*1680 2*	*49%*	

Weld (Balance of Volume Region G-H-I-J)

Entry #	Exam. Angle (deg)	Beam Direction	Area Examined (sq. in.)	Length Examined (in.)	Volume Examined (cu in)	Volume Required (cu. in)	Percent Examined	
1	45L	11	4 84	232.58	1125 7	1125.7	100%	100% COVERAGE
2	45L	11	0 00	57.39	0 0	277.8	0%	NO COVERAGE
3	45L	11	4 84	58.90	285.1	285 1	100%	7.35 ALPHA
4	45L	11	2.59	75 43	195 4	365 1	54%	4 03 ALPHA
5	45S	11	4.84	232.58	1125.7	1125 7	100%	100% COVERAGE
6	45S	11	0.00	57.39	0 0	277.8	0%	NO COVERAGE
7	45S	11	4.84	58 90	285.1	285 1	100%	7.35 ALPHA
8	45S	11	2.59	75 43	195 4	365.1	54%	4 03 ALPHA
9	45L	12	4 84	143 53	694 7	694.7	100%	100% COVERAGE
10	45L	12	0 00	280 77	0 0	1358 9	0%	NO COVERAGE
11	45S	12	4 84	143 53	694 7	694.7	100%	100% COVERAGE
12	45S	12	0 00	280.77	0.0	1358.9	0%	NO COVERAGE
13	45L	3	4 84	159.31	771.1	771.1	100%	100% COVERAGE
14	45L	3	0 00	264.99	0 0	1282 6	0%	NO COVERAGE
15	45S	3	4 84	159 31	771.1	771.1	100%	100% COVERAGE
16	45S	3	0.00	264 99	0 0	1282 6	0%	NO COVERAGE
17	45L	4	4.84	156 06	755 3	755.3	100%	100% COVERAGE
18	45L	4	0.00	268 24	0 0	1298 3	0%	NO COVERAGE
19	45S	4	4 84	156 06	755 3	755 3	100%	100% COVERAGE
20	45S	4	0 00	268 24	0 0	1298 3	0%	NO COVERAGE
				Totals·	*7654 4*	*16428 9*	*47%*	

BASE METAL

W-20 SHEET 2

Adjacent Base Metal (Near Surface Region A-B-I-L and C-D-E-H)

Entry #	Exam. Angle (deg)	Beam Direction	Area Examined (sq. in)	Length Examined (in)	Volume Examined (cu in.)	Volume Required (cu in)	Percent Examined	
1	70L	11	5.90	232.58	1372.2	1372.2	100%	100% COVERAGE
2	70L	11	0 00	57.39	0.0	338.6	0%	NO COVERAGE
3	70L	11	3 21	58 90	189.1	347.5	54%	7.35 ALPHA
4	70L	11	1.90	75 43	143 3	445 0	32%	4.03 ALPHA
5	70L	3	5.90	159.31	939.9	939.9	100%	100% COVERAGE
6	70L	3	0.00	264.99	0 0	1563.4	0%	NO COVERAGE
7	70L	4	5 90	156 06	920 8	920.8	100%	100% COVERAGE
8	70L	4	0.00	268 24	0 0	1582.6	0%	NO COVERAGE
				Totals·	*3565 3*	*7510.1*	*47%*	

Adjacent Base Metal (Balance of Volume Region E-F-G-H and I-J-K-L)

Entry #	Exam. Angle (deg.)	Beam Direction	Area Examined (sq. in.)	Length Examined (in)	Volume Examined (cu. in.)	Volume Required (cu. in.)	Percent Examined	
1	45L	11	25.48	232.58	5926.1	5926.1	100%	100% COVERAGE
2	45L	11	0 00	57.39	0.0	1462.3	0%	NO COVERAGE
3	45L	11	22.55	58.90	1328.2	1500.8	89%	7.35 ALPHA
4	45L	11	12.02	75.43	906.7	1922.0	47%	4 03 ALPHA
5	45S	11	25.48	232.58	5926.1	5926.1	100%	100% COVERAGE
6	45S	11	0.00	57.39	0.0	1462.3	0%	NO COVERAGE
7	45S	11	22.55	58.90	1328.2	1500 8	89%	7.35 ALPHA
8	45S	11	12.02	75 43	906.7	1922.0	47%	4.03 ALPHA
9	45L	3	25 48	159.31	4059.2	4059 2	100%	100% COVERAGE
10	45L	3	0.00	264.99	0 0	6751.9	0%	NO COVERAGE
11	45S	3	25.48	159.31	4059.2	4059 2	100%	100% COVERAGE
12	45S	3	0.00	264 99	0.0	6751.9	0%	NO COVERAGE
13	45L	4	25.48	156 06	3976.4	3976.4	100%	100% COVERAGE
14	45L	4	0.00	268 24	0 0	6834.8	0%	NO COVERAGE
15	45L	4	25.48	156 06	3976 4	3976.4	100%	100% COVERAGE
16	45L	4	0 00	268 24	0.0	6834.8	0%	NO COVERAGE
				Totals·	*32393.3*	*64867.0*	*50%*	

APPENDIX VIII
W20
1RPV 4-469
B01.021.002

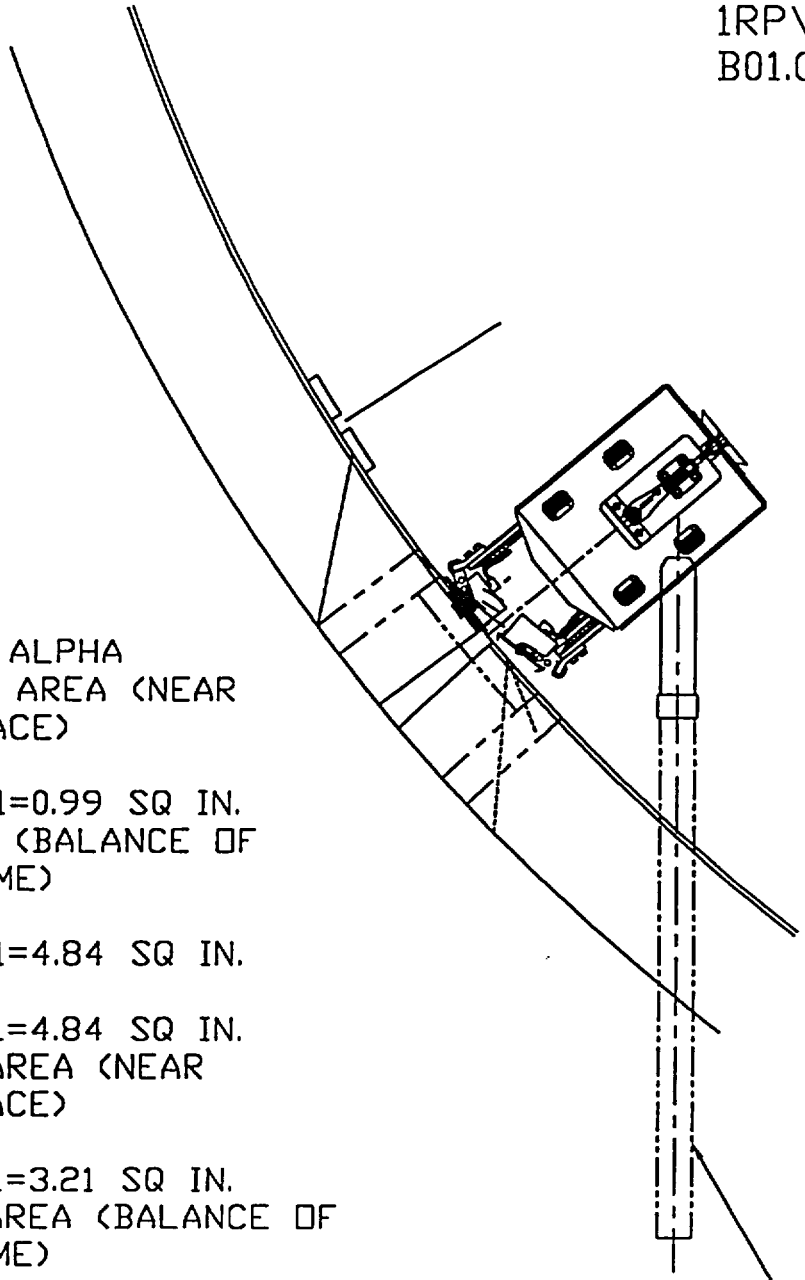

MAP
7.35° ALPHA
WELD AREA (NEAR SURFACE)
70°
DIR 11=0.99 SQ IN.
WELD (BALANCE OF VOLUME)
45°L
DIR 11=4.84 SQ IN.
45°S
DIR 11=4.84 SQ IN.
T/2 AREA (NEAR SURFACE)
70°
DIR 11=3.21 SQ IN.
T/2 AREA (BALANCE OF VOLUME)
45°L
DIR 11 =22.55 SQ IN.
45°S
DIR 11 =22.55 SQ IN.

APPENDIX VIII
W20
1RPV 4-469
B01.021.002

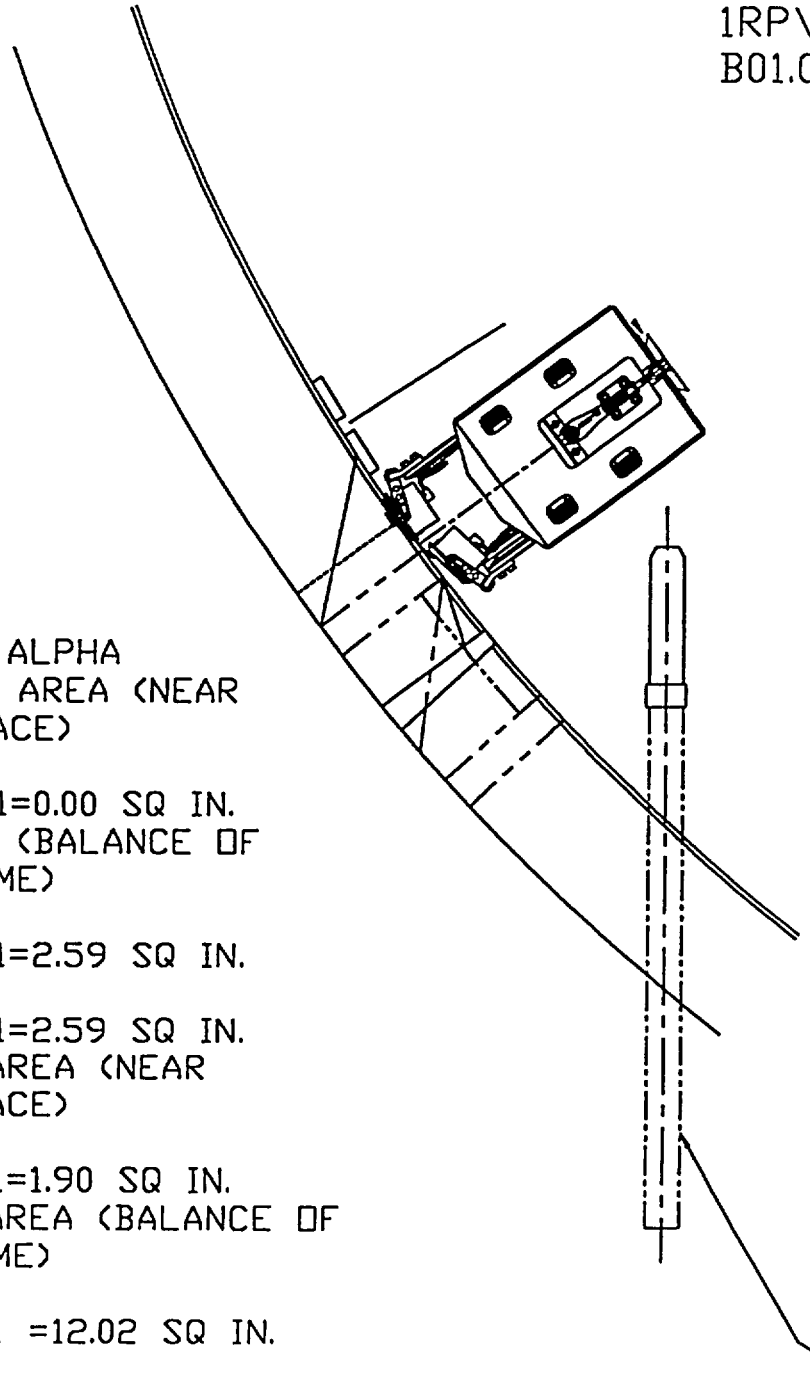

MAP
4.03° ALPHA
WELD AREA (NEAR SURFACE)
70°
DIR 11=0.00 SQ IN.
WELD (BALANCE OF VOLUME)
45°L
DIR 11=2.59 SQ IN.
45°S
DIR 11=2.59 SQ IN.
T/2 AREA (NEAR SURFACE)
70°
DIR 11=1.90 SQ IN.
T/2 AREA (BALANCE OF VOLUME)
45°L
DIR 11 =12.02 SQ IN.
45°S
DIR 11 =12.02 SQ IN.

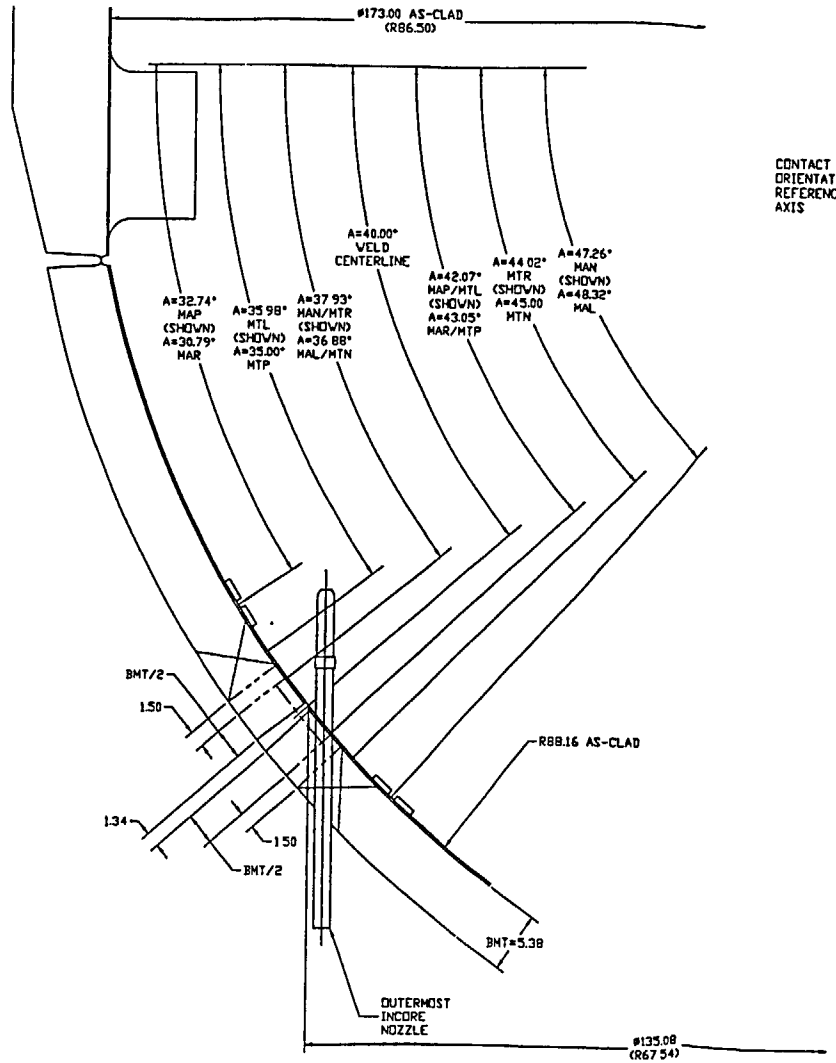

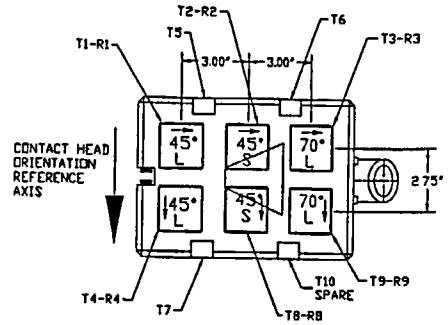

2x3 UT HEAD CONFIGURATION #3
FOR APPENDIX VIII SHELL SCANS
FROM VESSEL ID (AS VIEWED
FROM V-BLOCK ATTACHMENT
SIDE)

SCAN INDEX = 0.50" FOR DETECTION
= 0.20" FOR SIZING

APPENDIX VIII
W20
1RPV 4-469
B01.021.002

REVISIONS			
REV	DESCRIPTION	DATE	AUTHORIZED
3	FINAL REPORT AS-SCANNED	4/9 2001	R.H.RHODES N.G.HACKER

DRAWN BY	R.H.RHODES
CHECKED BY	R.H.RHODES
CHECKED BY	N.G.HACKER

McGUIRE-1
10 YEAR RV ISI
BOTTOM HD (CIRC)
URSULA EXAMINATION
SHEET 7 OF 11

6005117 E 3

1RPV7-442
B01-080-002

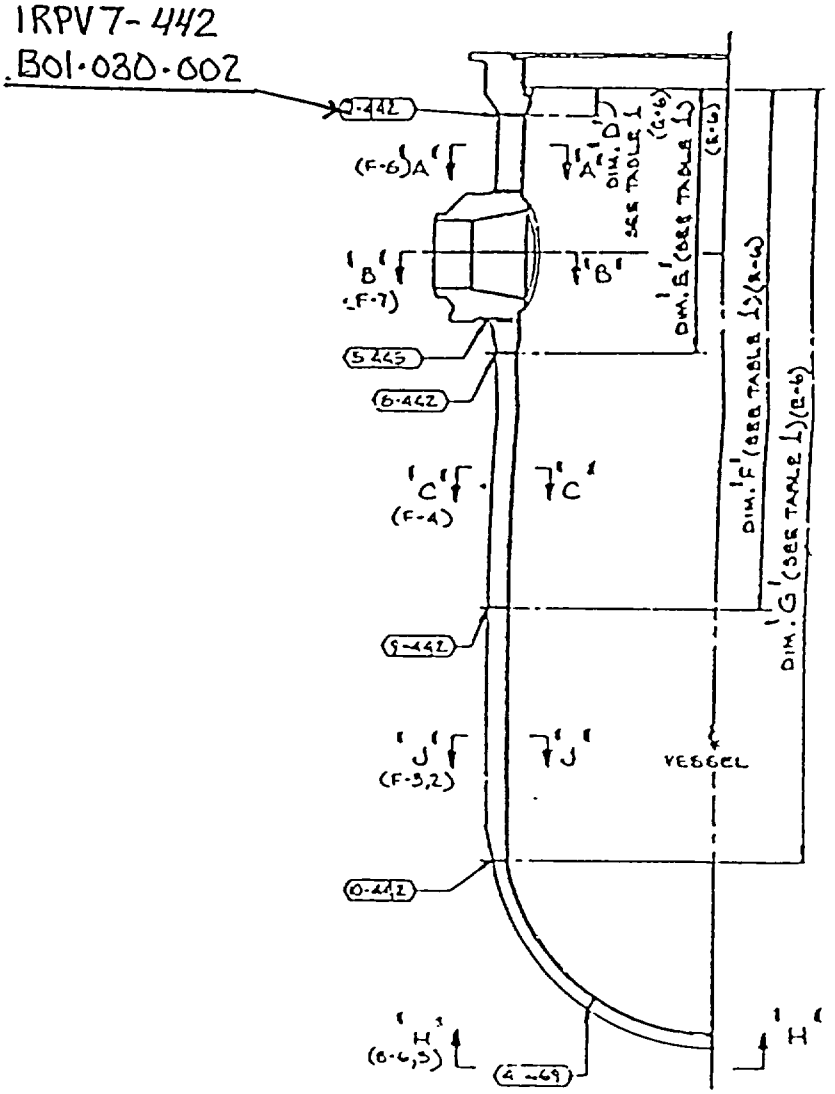

PRESSURE VESSEL ASSEMBLY

SCALE: 3/8"=1'-0"

McGUIRE UNIT 1 REACTOR VESSEL

FOR INFORMATION ONLY

MCGUIRE-1 APPENDIX VIII
EXAMINATION COVERAGE FOR WELD: W01
NOZZLE BELT-TO-FLANGE

McGUIRE-1 WELD NO.: 1RPV 7-442
B01.030.002

SCAN PLAN DRAWING NO,: 6005113E-03

AGGREGATE COVERAGE OBTAINED: 90%

Zone Coverage Obtained

Weld 81% Adjacent Base Metal 91%

Examination Volume Definition

Weld Length 536 8 in

Area Measurement		Volume Calculation	
Weld. Near Surface	0 93 sq in.	Weld Near Surface	499 2 cu. in
Weld Balance of Volume	13 37 sq in.	Weld Balance of Volume	7177.0 cu. in
Base Metal. Near Surface	12.09 sq in.	Base Metal. Near Surface	6489 9 cu. in
Base Metal: Balance of Volume	125.33 sq in.	Base Metal· Balance of Volume	67277.1 cu. in

Examination Coverage Calculations

WELD

Weld (Near Surface Region B-C-H-I)

Entry #	Exam Angle (deg)	Beam Direction	Area Examined (sq in)	Length Examined (in.)	Volume Examined (cu. in)	Volume Required (cu. in.)	Percent Examined	
1	70L	1	0 93	420.17	390 8	390.8	100%	
2	70L	1	0 00	93.31	0 0	86.8	0%	AT 0-180 AXES
3	70L	1	0.93	23.33	21 7	21.7	100%	AT 90-270 AXES
4	70L	2	0 93	420.17	390 8	390.8	100%	
5	70L	2	0	93 31	0 0	86 8	0%	AT 0-180 AXES
6	70L	2	0.93	23.33	21 7	21.7	100%	AT 90-270 AXES
7	70L	3	0.93	420.17	390 8	390 8	100%	
8	70L	3	0	93 31	0 0	86 8	0%	AT 0-180 AXES
9	70L	3	0.93	23 33	21.7	21.7	100%	AT 90-270 AXES
10	70L	4	0 93	420 17	390 8	390 8	100%	
11	70L	4	0	93 31	0.0	86 8	0%	AT 0-180 AXES
12	70L	4	0 93	23.33	21.7	21.7	100%	AT 90-270 AXES
				Totals	*1649 8*	*1996 9*	*83%*	

Weld (Balance of Volume Region G-H-I-J)

Entry #	Exam Angle (deg)	Beam Direction	Area Examined (sq in.)	Length Examined (in.)	Volume Examined (cu in)	Volume Required (cu. in)	Percent Examined	
1	45L	1	12 21	420.17	5130 3	5617.7	91%	
2	45L	1	0.00	93 31	0 0	1247.6	0%	AT 0-180 AXES
3	45L	1	12.21	23 33	284 9	311.9	91%	AT 90-270 AXES
4	45L	2	13 37	420 17	5617.7	5617.7	100%	
5	45L	2	0 00	93 31	0.0	1247 6	0%	AT 0-180 AXES
6	45L	2	13 37	23 33	311.9	311 9	100%	AT 90-270 AXES
7	45L	3	13 37	420 17	5617.7	5617.7	100%	
8	45L	3	0 00	93 31	0 0	1247.6	0%	AT 0-180 AXES
9	45L	3	13 37	23 33	311.9	311.9	100%	AT 90-270 AXES
10	45L	4	13 37	420.17	5617.7	5617.7	100%	
11	45L	4	0 00	93 31	0 0	1247.6	0%	AT 0-180 AXES
12	45L	4	13 37	23 33	311.9	311 9	100%	AT 90-270 AXES
13	45S	1	12 21	420 17	5130 3	5617 7	91%	
14	45S	1	0 00	93.31	0 0	1247 6	0%	AT 0-180 AXES
15	45S	1	12 21	23.33	284 9	311 9	91%	AT 90-270 AXES
16	45S	2	13 37	420.17	5617.7	5617.7	100%	
17	45S	2	0 00	93 31	0 0	1247.6	0%	AT 0-180 AXES
18	45S	2	13.37	23 33	311 9	311.9	100%	AT 90-270 AXES
19	45S	3	13.37	420 17	5617 7	5617.7	100%	
20	45S	3	0 00	93 31	0 0	1247 6	0%	AT 0-180 AXES
21	45S	3	13 37	23 33	311 9	311 9	100%	AT 90-270 AXES
22	45S	4	13 37	420 17	5617 7	5617.7	100%	
23	45S	4	0 00	93 31	0 0	1247 6	0%	AT 0-180 AXES
24	45S	4	13 37	23 33	311.9	311 9	100%	AT 90-270 AXES
				Totals	*46407 8*	*57417 2*	*81%*	

BASE METAL

W0-1 SHEET-2

Adjacent Base Metal (Near Surface Region A-B-I-L and C-D-E-H)

Entry #	Exam. Angle (deg)	Beam Direction	Area Examined (sq in)	Length Examined (in)	Volume Examined (cu. in)	Volume Required (cu. in)	Percent Examined	
1	70L	1	12 09	420 17	5079.9	5079 9	100%	
2	70L	1	2.09	93 31	195.0	1128 1	17%	AT 0-180 AXES
3	70L	1	12.09	23 33	282.1	282 1	100%	AT 90-270 AXES
4	70L	3	12.09	420 17	5079.9	5079 9	100%	
5	70L	3	5 50	93 31	513 2	1128 1	45%	AT 0-180 AXES
6	70L	3	12 09	23.33	282 1	282.1	100%	AT 90-270 AXES
7	70L	4	12.09	420.17	5079 9	5079 9	100%	
8	70L	4	2.75	93.31	256 6	1128 1	23%	AT 0-180 AXES
9	70L	4	12.09	23.33	282.1	282.1	100%	AT 90-270 AXES
				Totals	*17050 6*	*19470 1*	*88%*	

Adjacent Base Metal (Balance of Volume Region E-F-G-H and I-J-K-L)

Entry #	Exam Angle (deg)	Beam Direction	Area Examined (sq in.)	Length Examined (in)	Volume Examined (cu. in.)	Volume Required (cu in)	Percent Examined	
1	45L	1	125 33	420 17	52659.9	52659 9	100%	
2	45L	1	100 96	93 31	9420.6	11694 5	81%	AT 0-180 AXES
3	45L	1	125.33	23 33	2923.9	2923.9	100%	AT 90-270 AXES
4	45L	3	125.33	420.17	52659.9	52659 9	100%	
5	45L	3	53 48	93.31	4990.2	11694.5	43%	AT 0-180 AXES
6	45L	3	125 33	23.33	2923 9	2923 9	100%	AT 90-270 AXES
7	45L	4	125.33	420.17	52659 9	52659.9	100%	
8	45L	4	26.81	93.31	2501.6	11694 5	21%	AT 0-180 AXES
9	45L	4	125.33	23 33	2923 9	2923.9	100%	AT 90-270 AXES
10	45S	1	125.33	420.17	52659 9	52659.9	100%	
11	45S	1	100 96	93.31	9420 6	11694.5	81%	AT 0-180 AXES
12	45S	1	125.33	23.33	2923 9	2923.9	100%	AT 90-270 AXES
13	45S	3	125 33	420.17	52659 9	52659.9	100%	
14	45S	3	53.48	93 31	4990.2	11694.5	43%	AT 0-180 AXES
15	45S	3	125 33	23.33	2923.9	2923.9	100%	AT 90-270 AXES
16	45S	4	125.33	420.17	52659.9	52659.9	100%	
17	45S	4	26 81	93 31	2501.6	11694 5	21%	AT 0-180 AXES
18	45S	4	125.33	23 33	2923 9	2923 9	100%	AT 90-270 AXES
				Totals	*367328 0*	*403670 4*	*91%*	

REVISIONS			
3	FINAL REPORT-AS SCANNED	4/9 2001	R.H.RHODES M.G.HACKER

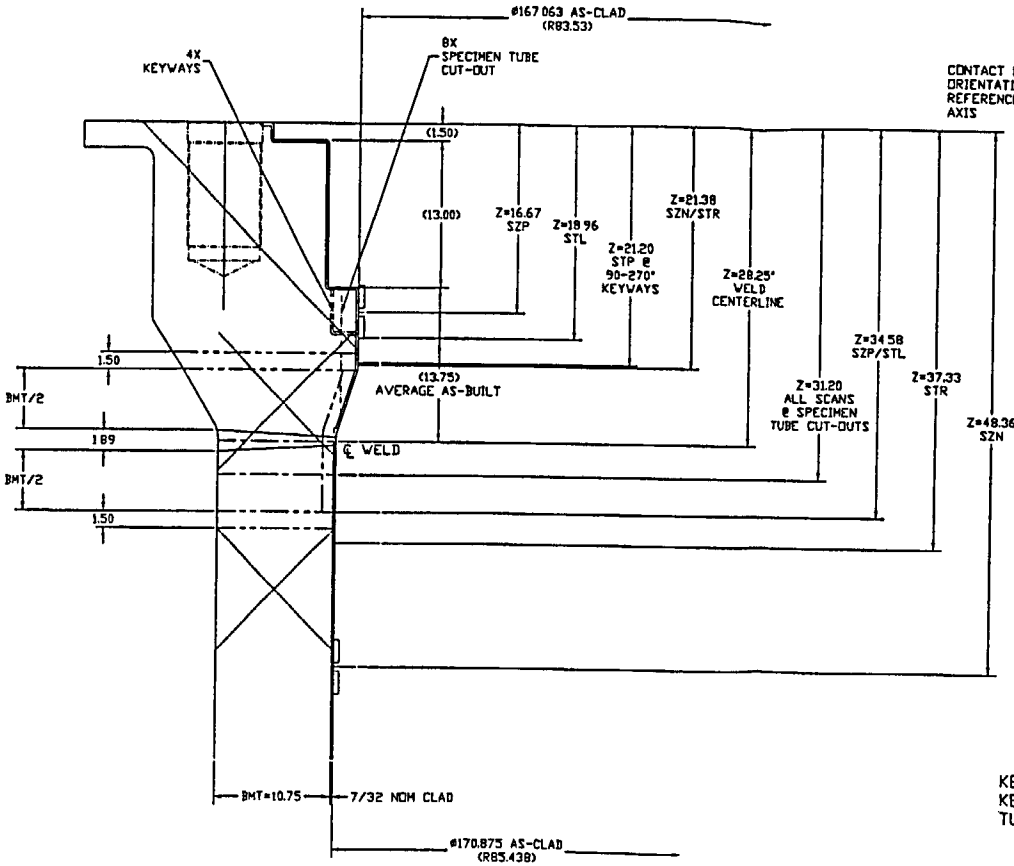

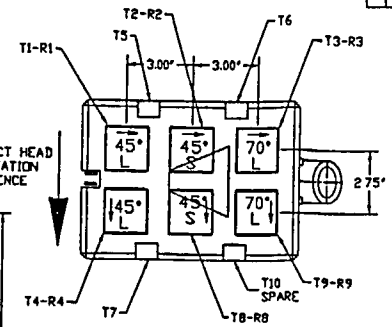

2x3 UT HEAD CONFIGURATION #3
FOR APPENDIX VIII SHELL SCANS
FROM VESSEL ID (AS VIEWED
FROM V-BLOCK ATTACHMENT
SIDE)

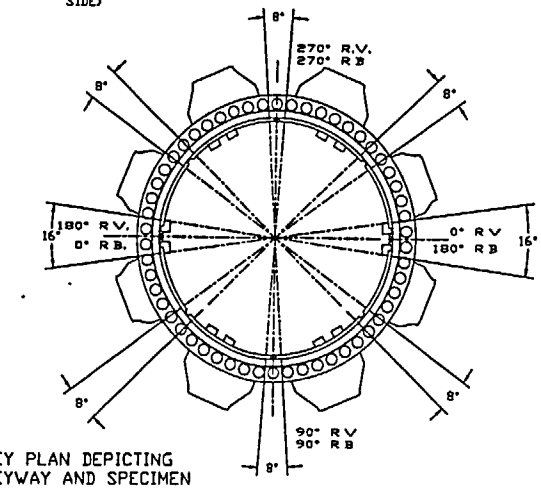

KEY PLAN DEPICTING
KEYWAY AND SPECIMEN
TUBE CUT-OUTS

SCAN INDEX = 0.50" FOR DETECTION
0.20" FOR SIZING

APPENDIX VIII
W01
1RPV 7-442
B01.030.002

FILENAME: DISK No.: DWG

DRAWN R.H.RHODES
CHECKED M.G.HACKER
APPROVED M.G.HACKER

McGUIRE-1
10 YEAR ISI
NOZZLE BELT-TO-FLG
URSULA EXAMINATION
SHEET 3 OF 11

6005113 E 3

1RPV-CORE-SUP (Item B13.070.001) CATEGORY: B-N-3

FRAMATOME ANP

IVVI Inspection Data Sheet
McGuire Unit 1 ISI-EOC 14

Examination Procedure No.: 54-ISI-364-00 | Data Sheet No.: 1 OF 7

Component ID	Description	Az	Exam Type	Cal. #	Tape Number	Tape Start	Tape End	Results	Examiner	Level	Exam Date	Remarks/Comments
1.0 Inspection of Upper Section of Upper Internals	Scan area: conduit, swagelok reducing unions and conduit straps – Inspection Item # 1	SEE* REM	VT3		8	0	18:52	NRI	SHS	II	3/30	*160° AZ TO 210° AZ
	Scan area: clamps and mounting brackets– Inspection Item # 2		VT3		8	0	18:52	NRI	SHS	II	3/30	NOT ACCESSABLE
	Scan area: Plug to conduit weld at 4 support columns adjacent to the thermocouple column– Inspection Item # 3		VT3		8	0	18:52	NRI	SHS	II	3/30	" "
	Scan area: upper support plate– Inspection Item # 11A		VT3		8	0	18:52	NRI	SHS	II	3/30	" "
	Thermocouple column and guide tube screw locking devices– Inspection Item # 6		VT3		8	0	18:52	NRI	SHS	II	3/30	" "

S. H. Sgro Examiner	II Level	03-30-01 Date
N/A Examiner	Level	Date
K. Harden Reviewed By	III Level	6-1-01 Date
Rick Brand Customer Review	6-11-01 Date	

Exam Results Key: N/A = Not Applicable, NRI = No Relevant Indications, RI = Relevant Indications

Note: See original hand-written data sheets for Examiner signatures.

1RPV-CORE-SUP (Item B13.070.001) CATEGORY: B-N-3

FRAMATOME ANP

IVVI Inspection Data Sheet
McGuire Unit 1 ISI-EOC 14

Examination Procedure No.: 54-ISI-364-00

Data Sheet No.: 2 OF 7

Component ID	Description	Az	Exam Type	Cal. #	Tape Number	Tape Start	Tape End	Results	Examiner	Level	Exam Date	Remarks/Comments
2.0 Inspection of Lower Section of Upper Internals (Middle) Section	Upper Support Plate – Inspection Item # 11B				7	0	48:03	NRI	SMH	II	3-29	
	Mating surfaces between columns and upper support plate (flush with no gaps, inspect 20/112 columns) – Inspection Item # 13	SEE REM-ARKS	VT3		8	18:52	31:01	NRI	SHS	II	3/30	SEE BELOW
	Guide tube welds (12 of 71) – Inspection Item # 9	SEE REM	VT3		8	18:52	31:01	NRI	SHS	II	3/30	160° AZ TO 180° AZ
	Weld joints on accessible support column and mixing device gussets (20 of 112) – Inspection Item # 5	"	VT3		8	18:52	31:01	NRI	SHS	II	3/30	NOT ACCESSABLE
	Accessible support column, mixing device, orifice plate, and core plate. Screw locking devices (specifically CRD guide tube support pin) – Inspection Item # 7	"	VT3		8	18:52	31:01	NRI	SHS	II	3/30	"
	Upper core plate keyways (4 of 4) – Inspection Item # 12		VT3		7	0	48:03	NRI	SMH	II	3-29	
	Upper core plate inserts (4 of 4) – Inspection Item # 8		VT-3		7	0	48:03	NRI	SMH	II	3/29	
	Upper core plate and fuel alignment pins top * min. of 60/386 – Inspection Item # 10		VT-3		7	0	48:03	NRI	SMH	II	3-29	
	Fuel assembly guide pins and seating surfaces (top) – Inspection Item # 25A		VT-3		7	0	48:03	NRI	SMH	II	3-29	

Steve M. Herman	II	03-29-01
Examiner	Level	Date
S. H. Sgro	II	03-30-01
Examiner	Level	Date
K. J. Hacker	III	6-1-01
Reviewed By	Level	Date
R. Brook	6-11-01	
Customer Review	Date	

Exam Results Key: N/A = Not Applicable, NRI and ACC = No Relevant Indications, RI = Relevant Indications
*Note: The upper internals must be on the polar crane and be able to rotate to perform the examination
Note: See original hand-written data sheets for Examiner signatures

1RPV-CORE-SUP (Item B13.070.001) CATEGORY: B-N-3

FRAMATOME ANP

IVVI Inspection Data Sheet
McGuire Unit 1 ISI-EOC 14

Examination Procedure No.: 54-ISI-364-00 | Data Sheet No.: 3 OF 7

Component ID	Description	Az	Exam Type	Cal. #	Tape Number	Tape Start	Tape End	Results	Examiner	Level	Exam Date	Remarks/Comments
3.0 Inspection of Lower Internals (1201.01.0056 001) (Core Barrel O.D.)	Upper barrel to flange girth weld OD only (360°) – Inspection Item # 15A		VT-3	NA	1	0	23	NRI	SMH	II	3/27/01	
	Lower internals in area of cold leg inlets (above and below 4 nozzles) – Inspection Item # 38		VT-3	NA	4	0	12.03	NRI	SMH	II	3/28/01	
	Outlet nozzle interface surface condition* (4) – Inspection Item # 19		VT-3	NA	2	0	08:51	NRI	SMH	II	3/28/01	GOUGES ON 270 TO NOZZLE FACE
	Upper core barrel to outlet nozzle welds, 360°, 4 nozzles, OD welds – Inspection Item # 14A		VT-3	NA	2	08:51	32:15	NRI	SMH	II	3/28/01	
	Upper barrel to lower barrel girth weld (OD only) (360°) – Inspection Item # 16A		VT-3	NA	2	32:15	58:33	NRI	SMH	II	3/28/01	
	Upper core plate aligning pin welds (4 of 4) – Inspection Item # 18		VT-3	NA	1	23	39	NRI	SMH	II	3/27/01	SLIGHT EROSION ON BOTTOM OF 270° PIN BODY
	Neutron shield panel dowel pin covers, screw locking devices, and interface surfaces at spacer bars (inspect 100% of locking devices an all others as accessible viewing from periphery) (4) – Inspection Item # 20		VT-3	NA	4	21:09	1:03:00	NRI	SMH	II	3/28/01	
	" – Inspection Item # 21		VT-3	NA	4	21:09	1:03:00	NRI	SMH	II	3-28-01	
	" – Inspection Item # 22		VT-3	NA	4	21:09	1:03:00	NRI	SMH	II	3-28-01	
	Irradiation specimen guide Screw locking devices and dowel pins (23) and access plug (23A) (100% each) – Inspection Item # 23 and 23A		VT-3	NA	1& 4	21:09 46	1:03:00 1:04	NRI	SHH	II	3-27-01 3-28-01	
	Upflow conversion plugs (24) – Inspection Item # 24A		VT-3	NA	4	12:03	21:09	NRI	SMH	II	3-28-01	

Steve M. Herman	II	03-27 & 28-01
Examiner	Level	Date
KJ Hacker	III	6-1-01
Reviewed By	Level	Date
R. Brand	6-11-01	
Customer Review	Date	

Exam Results Key: N/A = Not Applicable, NRI = No Relevant Indications, RI = Relevant Indications
*Inspect entire vessel/core barrel interface surface, 4 outlet nozzles
Note: See original hand-written data sheets for Examiner signatures.

1RPV-CORE-SUP (Item B13.070.001) CATEGORY: B-N-3

FRAMATOME ANP

IVVI Inspection Data Sheet
McGuire Unit 1 ISI-EOC 14

Examination Procedure No.: 54-ISI-364-00 | Data Sheet No.: 4 OF 7

Component ID	Description	Az	Exam Type	Cal. #	Tape Number	Tape Start	Tape End	Results	Examiner	Level	Exam Date	Remarks/Comments
3.0 Inspection of Lower Internals (1201.01.0056 001) (Core Barrel O.D.) (continued)	Lower core barrel girth weld between 5th and 6th formers. Inspect 360° except areas covered by neutron shield pads. (Middle) – Inspection Item # 17A*		VT-3	N/A	6	35:24	54:39	NRI	SMH	II	3/29/01	
	Lower barrel to core support girth weld (inspect 360°, OD only) – Inspection Item # 17		VT-3	N/A	6	25:34	35:24	NRI	SMH	II	3/29/01	
	Radial support key (35), welds and locking devices (36) and bearing surfaces (37) (6 of 6) – Inspection Item # 35		VT-3	N/A	3	0	30:30	NRI	SMH	II	3/28/01	
	" – Inspection Item # 36		VT-3	N/A	3	0	30.30	NRI	SMH	II	3/28/01	
	" – Inspection Item # 37		VT-3	N/A	3	0	30.30	NRI	SMH	II	3/28/01	
	Secondary core support (Lower Flow Area) (100%) – Inspection Item # 27		VT-3	N/A	3	30.30	1:29:00	NRI	SMH	II	3/28/01	
	Lower tie plate* (Lower Flow Area) – Inspection Item # 28		VT-3	N/A	3	30:30	1.29.00	NRI	SMH	II	3/28/01	
	Upper tie plate* (Lower Flow Area) – Inspection Item # 29		VT-3	N/A	3	30:30	1:29.00	NRI	SMH	II	3/28/01	
	Lower support plate ** (Lower Flow Area) – Inspection Item # 30		VT-3	N/A	3	30:30	1:29:00	NRI	SMH	II	3/28/01	

Steve M. Herman	II	03-28 & 29-01
Examiner	Level	Date
K. J. Hacker	III	6-1-01
Reviewed By	Level	Date
R. Brem	6-11-01	
Customer Review	Date	

Exam Results Key: N/A = Not Applicable, NRI = No Relevant Indications, RI = Relevant Indications
* Inspect all accessible areas from the periphery
** Inspect all accessible areas from the OD periphery and inspect area on upper surface accessible through flow nozzle in manway cover on core plate.
Note: See original hand-written data sheets for Examiner signatures.

1RPV-CORE-SUP (Item B13.070.001) CATEGORY: B-N-3

FRAMATOME ANP

IVVI Inspection Data Sheet
McGuire Unit 1 ISI-EOC 14

Examination Procedure No.: 54-ISI-364-00 | Data Sheet No.: 5 OF 7

Component ID	Description	Az	Exam Type	Cal. #	Tape Number	Tape Start	Tape End	Results	Examiner	Level	Exam Date	Remarks/Comments
3.0 Inspection of Lower Internals (1201.01.0056 001) (Core Barrel O.D.) (continued)	Locking devices and contact of cruciform shaped bottom instrument guide columns, where attached at the core support and tie plates (Lower Flow Area) – Inspection Item # 33		VT-3	N/A	3	30:30	1:29:00	NRI	SMH	II	3/28/01	
	Locking devices of the secondary core support butt columns at the core support, tie plates and base plate (Lower Flow Area) – Inspection Item # 34		VT-3	N/A	3	30:30	1:29:00	NRI	SMH	II	3/28/01	
	Accessible welds on energy absorbers (Lower Flow Area) 4 of 4 ext. welds and internal as accessible – Inspection Item # 40		VT-3	N/A	3	30:30	1:29:00	NRI	SMH	II	3/28/01	
	Hold down spring (100%) (360°) – Inspection Item # 26		VT-3	N/A	1	39	46	NRI	SMH	II	3/27/01	
	Head/vessel alignment pin (4 of 4) – Inspection Item # 39		VT-3	N/A	1	23	39	NRI	SMH	II	3/27/01	
	Upper barrel to flange girth weld, ID (360°) – Inspection Item # 15B		VT-3	N/A	6	0	11:06	NRI	SMH	II	3/29/01	
	Upper core barrel to outlet nozzle welds 360°, ID (4) – Inspection Item # 14B		VT-3	N/A	2	58:33	1:11:26	NRI	SMH	II	3/28/01	

Steve M. Herman	II	03-27,28 & 29 -01
Examiner	Level	Date
K. Hack	III	6-1-01
Reviewed By	Level	Date
R. Brunk	6-11-01	
Customer Review	Date	

Exam Results Key: N/A = Not Applicable, NRI = No Relevant Indications, RI = Relevant Indications

Note: See original hand-written data sheets for Examiner signatures.

1RPV-CORE-SUP (Item B13.070.001) CATEGORY: B-N-3

FRAMATOME ANP

IVVI Inspection Data Sheet
McGuire Unit 1 ISI-EOC 14

Examination Procedure No.: 54-ISI-364-00 | Data Sheet No.: 6 OF 7

Component ID	Description	Az	Exam Type	Cal. #	Tape Number	Tape Start	Tape End	Results	Examiner	Level	Exam Date	Remarks/Comments
3.0 Inspection of Lower Internals (1201.01.0056 001) (Core Barrel O.D.) (continued)	Nozzle flow area outlet 360°, ID (4) – Inspection Item # 14B		VT-3	N/A	2	58:33	1:11:26	NRI	SMH	II	3/28/01	
	Upper barrel to lower barrel girth weld (Middle) ID (360°) – Inspection Item # 16B		VT-3	N/A	6	11:06	25:34	NRI	SMH	II	3/29/01	
	Baffle plates and accessible former plates (100%) *** – Inspection Item # 24B		VT-3	N/A	5	26:00	1:55:00	NRI	SHS	II	3/29/01	
	Lower core plate (31) and manway cover (32), incl. Cover locating and guide pins (100%) – Inspection Item # 31		VT-3	N/A	5	0	26.00	NRI	SHS	II	3/28/01	
	" – Inspection Item # 32		VT-3	N/A	5	0	26:00	NRI	SHS	II	3/28/01	
	Fuel assembly guide pins & seating surfaces (Lower Core Plate) to be done with item number 31 (100%) – Inspection Item # 25B		VT-3	N/A	5	0	26:00	NRI	SHS	II	3/28/01	

Steve M. Herman	II	03-28 & 29-01
Examiner	Level	Date
S. H. Sgro	II	03-28 & 29-01
Examiner	Level	Date
K. Hacker	III	6-1-01
Reviewed By	Level	Date
R. Brunk	6-11-01	
Customer Review	Date	

Exam Results Key: N/A = Not Applicable, NRI = No Relevant Indications, RI = Relevant Indications

*** Inspect all internal baffle plate surfaces, top former and cavity immediately below top former. Inspect all top former plate upflow conversion holes (36) from above.

Note: See original hand-written data sheets for Examiner signatures.

1RPV-INCORE (Item B13.060.002)
Incore Nozzles: Category B-N-2

1RPV-KEYWAY (Item B13.060.001)
Radial Support Keyways: Category B-N-2

1RPV-INTERIOR (Item B13.010.001)
Reactor Vessel Interior: Category B-N-1

FRAMATOME ANP

IVVI Inspection Data Sheet
McGUIRE UNIT 1 ISI-EOC 14

Examination Procedure No.: 54-151-364-00

Data Sheet No.: 7 OF 7

Component ID	Description	Az	Exam Type	Cal. #	Tape Number	Tape Start	Tape End	Results	Examiner	Level	Exam Date	Remarks/Comments
REACTOR VESSEL	VESSEL FLANGE AREA, CORE SUPPORT LEDGE, and CLADDING	360	VT-3	N/A	12	0	50	NRI	SMH	II	4-4-01	
					11	0	41	NRI	SMH	II	4-3-01	
	INCORE NOZZLES	360	VT-3	N/A	11	0	41	NRI	SMH	II	4-3-01	
	RADIAL SUPPORT KEYWAYS	360	VT-3	N/A	11	0	41	NRI	SMH	II	4-3-01	

Steve M. Herman	II	04-04-01
Examiner	Level	Date
K J Hacker	III	6-1-01
Reviewed By	Level	Date
Rick Grant	6-11-01	
Customer Review	Date	

Exam Results Key: N/A = Not Applicable, NRI = No Relevant Indications, RI = Relevant Indications

Note: See original hand-written data sheets for Examiner signatures.

REVISIONS			
REV	DESCRIPTION	DATE	APPROVAL
3	FINAL REPORT-AS SCANNED LIMITED DUE TO SST INSERT PROTRUSION NOT SHOWN ON DETAIL DRAWINGS	4/9 2001	R.H.RHODES M.G.HACKER

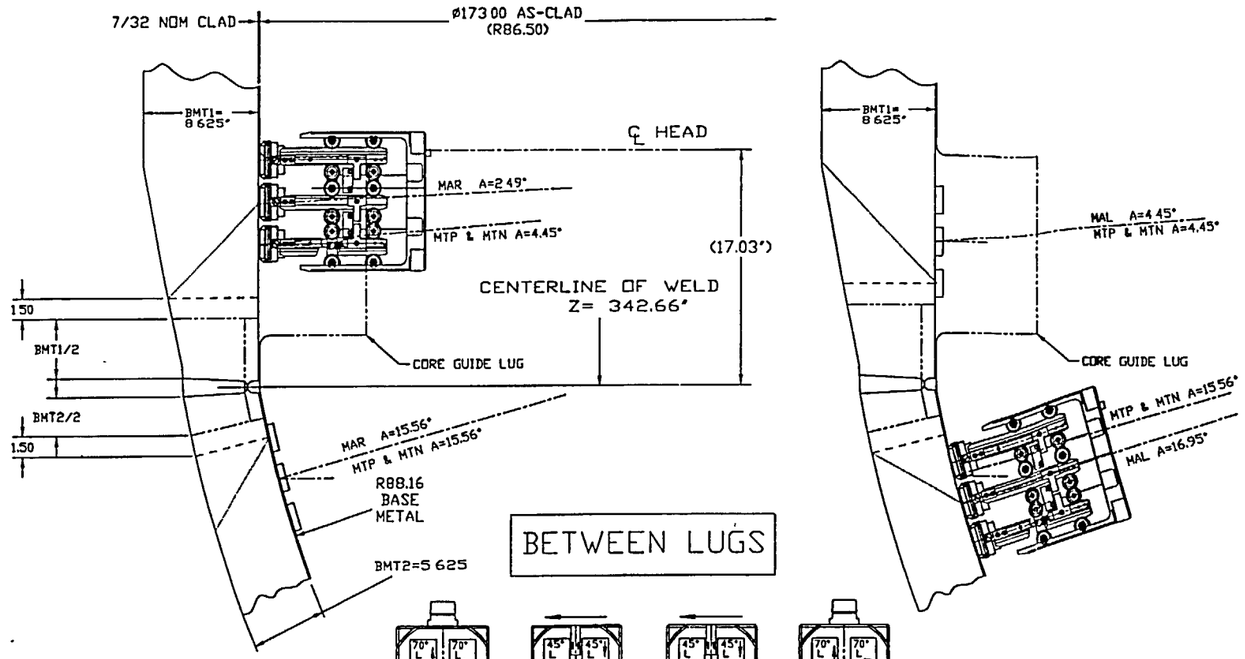

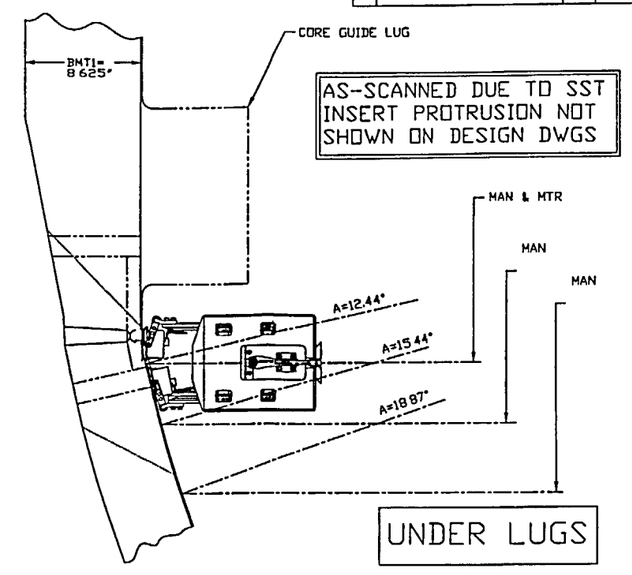

THIS VIEW DEPICTS THETA (CIRC) SCANS
AND ALPHA (AXIAL) SCANS FIRING DOWNWARD

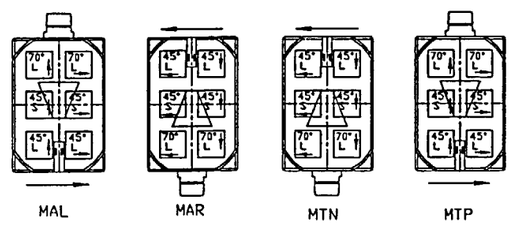

HEAD ORIENTATION FOR VARIOUS SCANS

THIS VIEW DEPICTS THETA (CIRC) SCANS
AND ALPHA (AXIAL) SCANS FIRING UPWARD

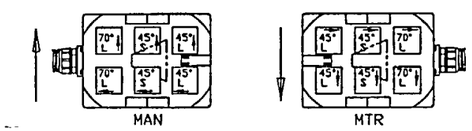

HEAD ORIENTATION FOR VARIOUS SCANS

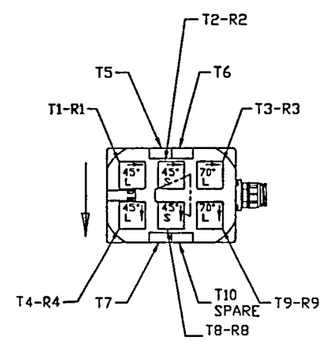

UT HEAD CONFIGURATION #3
2x3 UT HEAD CONFIGURATION
FOR APPENDIX VIII SHELL SCANS
AS VIEWED FROM V-BLOCK ATTACHMENT SIDE

SCAN INDEX = 0.50" FOR DETECTION
= 0.20" FOR SIZING

APPENDIX VIII
W13
1RPV 10-442
B01.011.003

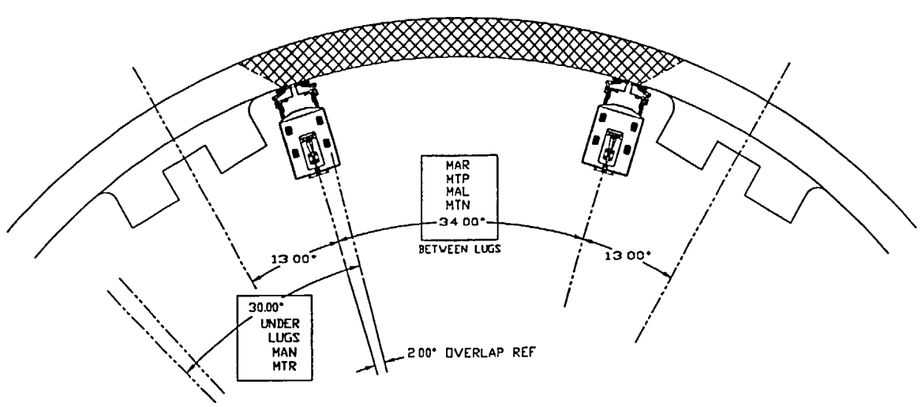

NOTE: THIS PARTIAL PLAN
VIEW IS 1/8 SCALE

GEOMETRY IN THE E-FILE IS 1/2 FULL SIZE

REFERENCE DRAWINGS (CONT.)		
11 McGUIRE-1 10 YR RV ISI OUTLET NOZZLE	6003MNE	
10 McGUIRE-1 10 YR RV ISI INLET NOZZLE	6003UNE	
9 McGUIRE-1 10 YR RV ISI HEATSHIELD	6003UNE	
8 McGUIRE-1 10 YR RV ISI LINE SCANS	6003UNE	
NO. DRAWING TITLE	DWG. NO.	

REFERENCE DRAWINGS		
7 McGUIRE-1 10 YR RV ISI BOTTOM HD (CIRC)	6003UNE	
6 McGUIRE-1 10 YR RV ISI LWR SHELL-TO-BOTTOM HD	6003UNE	
5 McGUIRE-1 10 YR RV ISI MID-TO-LWR SHELL	6003UNE	
4 McGUIRE-1 10 YR RV ISI UP-TO-MID SHELL	6003UNE	
3 McGUIRE-1 10 YR RV ISI NOZZLE BELT-TO-FLG	6003UNE	
2 McGUIRE-1 10 YR RV ISI LOGISTICS	6003UNE	
1 McGUIRE-1 10 YR RV ISI COVER SHEET	6003UNE	
NO. DRAWING TITLE	DWG. NO.	

DWN BY R.H.RHODES
CHK'D BY R.H.RHODES
PREPARED BY
APPROVED BY H.G.HACKER
DATE
CONTRACT NO.

McGUIRE-1
10 YEAR RV ISI
LWR SHELL-TO-BOTTOM
HEAD-URSULA EXAM
SHEET 6 OF 11

FRAMATOME TECHNOLOGIES

SCALE 1/4

DRAWING NO. 6005116 E REV NO. 3

REVISIONS			
REV	DESCRIPTION	DATE	APPROVAL
3	FINAL REPORT-AS SCANNED: LIMITED ON LOWER LONG SEAMS DUE TO SST INSERT PROTRUSION NOT SHOWN ON DETAIL DRAWINGS.	4-9 2001	R.H.RHODES M.G.HACKER

REACTOR VESSEL COORDINATES

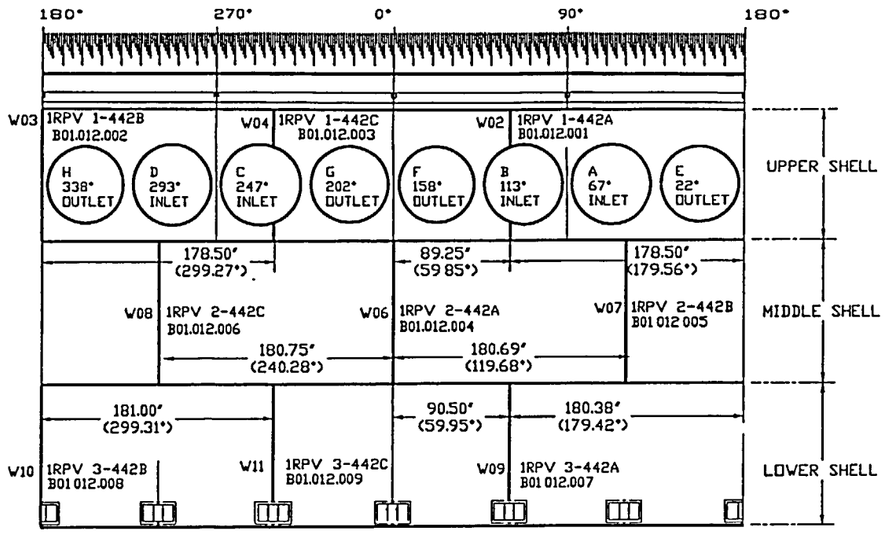

DEVELOPED VIEW SHOWING AS-BUILT DIMENSIONS
NOT TO SCALE

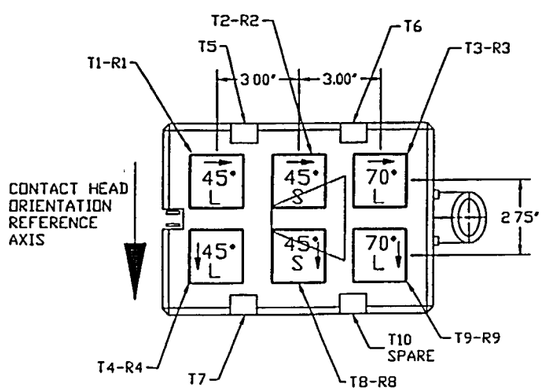

2x3 UT HEAD CONFIGURATION #3 FOR APPENDIX VIII SHELL SCANS FROM VESSEL ID (AS VIEWED FROM V-BLOCK ATTACHMENT SIDE)

UPPER SHELL

60°
W02
1RPV 1-442A
B01.012.001
180°
W03
1RPV 1-442B
B01.012.002
300°
W04
1RPV 1-442C
B01.012.003

MIDDLE SHELL

0°
W06
1RPV 2-442A
B01.012.004
120°
W07
1RPV 2-442B
B01.012.005
240°
W08
1RPV 2-442C
B01.012.006

LOWER SHELL

60°
W09
1RPV 3-442A
B01.012.007
180°
W10
1RPV 3-442B
B01.012.008
300°
W11
1RPV 3-442C
B01.012.009

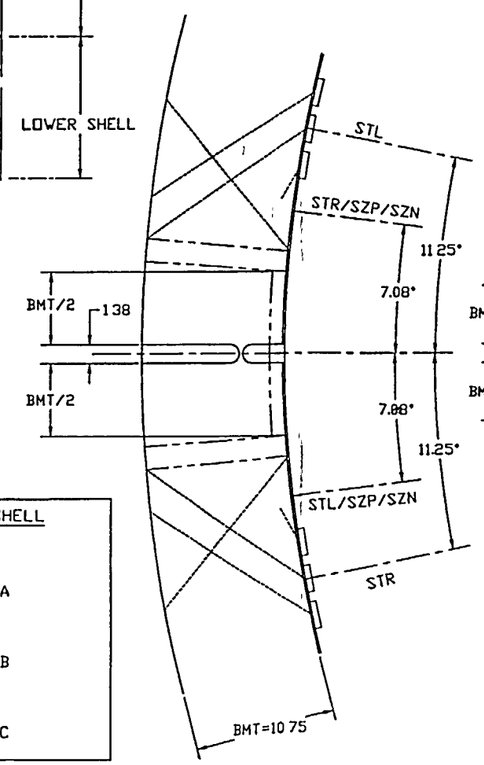

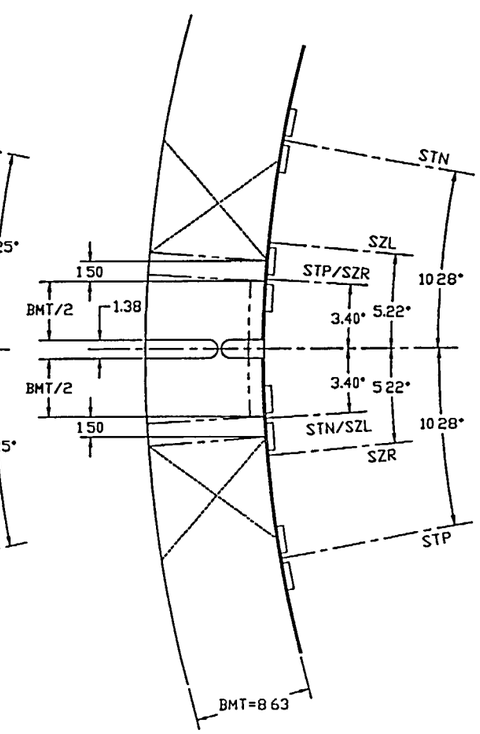

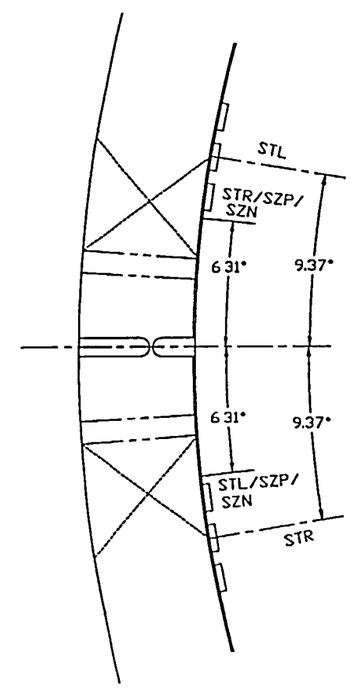

AS-SCANNED DUE TO SST INSERT PROTRUSION NOT SHOWN ON DESIGN DWGS

APPENDIX VIII

SCAN INDEX = 0.50" FOR DETECTION
0.20" FOR SIZING

REV	DRAWING TITLE	DWG. NO.
11	McGUIRE-1 10 YR RV ISI OUTLET NOZZLE	6007811E
10	McGUIRE-1 10 YR RV ISI INLET NOZZLE	6007810E
9	McGUIRE-1 10 YR RV ISI REINFORCINGS	6007815E
8	McGUIRE-1 10 YR RV ISI LONG SEAMS	6007814E

REFERENCE DRAWINGS (CONT.)

REV	DRAWING TITLE	DWG. NO.
7	McGUIRE-1 10 YR RV ISI BOTTOM HD (CONC)	6007811E
6	McGUIRE-1 10 YR RV ISI LVR SHELL-TO-BOTTOM HD	6007810E
5	McGUIRE-1 10 YR RV ISI MID-TO-LVR SHELL	6007813E
4	McGUIRE-1 10 YR RV ISI UP-TO-MID SHELL	6007812E
3	McGUIRE-1 10 YR RV ISI NOZZLE BOLT-TO-FLG	6007813E
2	McGUIRE-1 10 YR RV ISI LOGISTICS	6007812E
1	McGUIRE-1 10 YR RV ISI COVER SHEET	6007811E

REFERENCE DRAWINGS

DRAWN BY R.H.RHODES
CHK'D BY
PASSED BY M.G.HACKER
APPROVED BY M.G.HACKER
STD | SPC | DATE
CONTRACT NO.

McGUIRE-1
10 YEAR RV ISI
LONG SEAMS
URSULA EXAMINATION
SHEET 8 OF 11

FRAMATOME TECHNOLOGIES

SCALE
DRAWING NO. 6005118 E
REV. NO. 3
SHEET NO. 23

FILENAME, DISK No., DWG

REVISIONS			
REV	DESCRIPTION	DATE	APPROVAL
3	FINAL REPORT AS-SCANNED	4/9 2001	R.H.RHODES K.G.HACKER

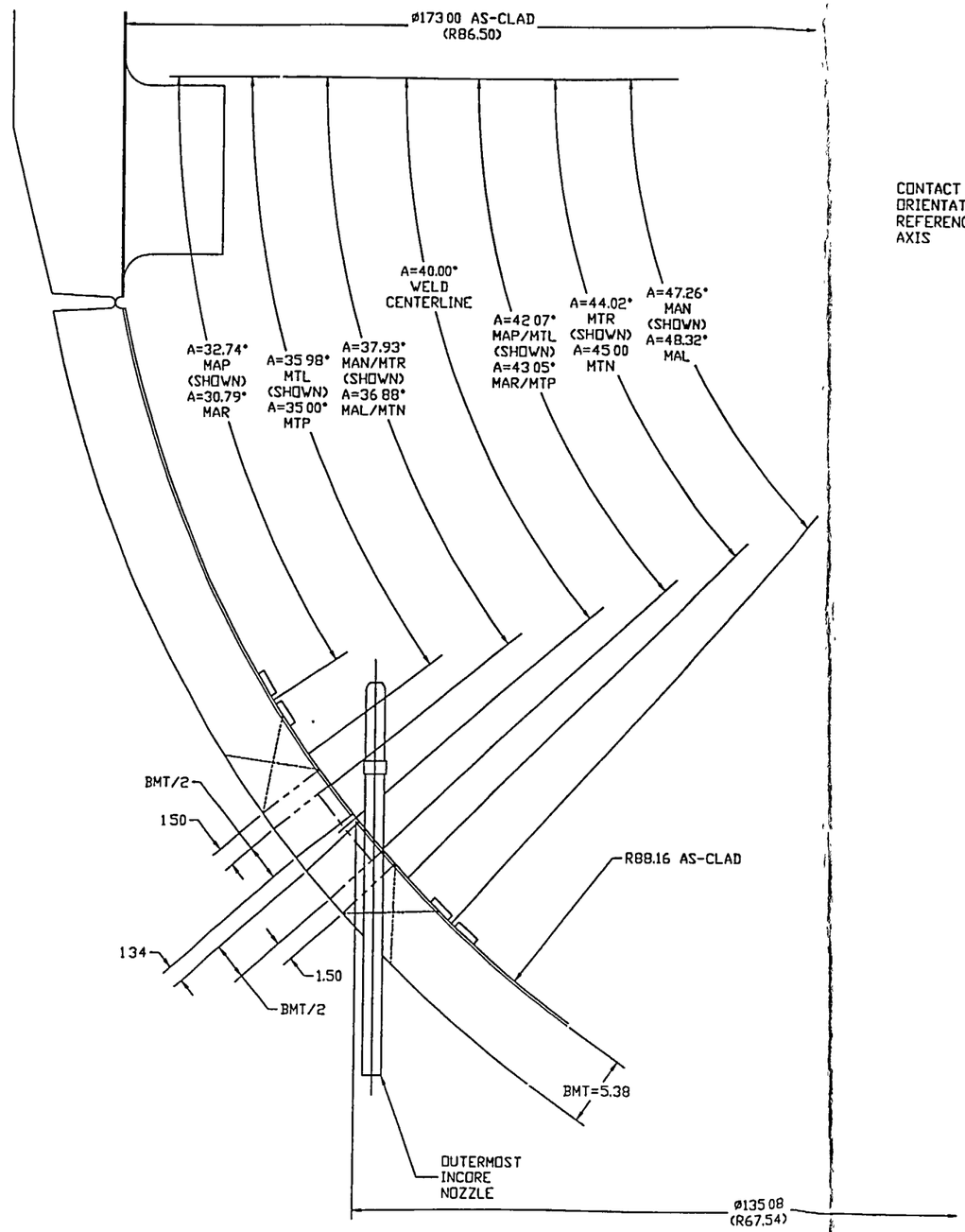

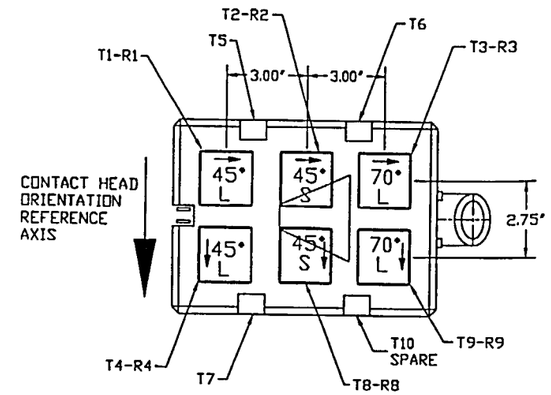

2x3 UT HEAD CONFIGURATION #3
FOR APPENDIX VIII SHELL SCANS
FROM VESSEL ID (AS VIEWED
FROM V-BLOCK ATTACHMENT
SIDE)

SCAN INDEX = 0.50" FOR DETECTION
= 0.20" FOR SIZING

APPENDIX VIII
W20
1RPV 4-469
B01.021.002

REFERENCE DRAWINGS (CONT.)					
11	McGUIRE-1 10 YR RV ISI OUTLET NOZZLE	6497511K	7	McGUIRE-1 10 YR RV ISI BOTTOM HD (CIRC)	6497511F
10	McGUIRE-1 10 YR RV ISI INLET NOZZLE	6497511D	6	McGUIRE-1 10 YR RV INI LVR SHELL-TO-BOTTOM HD	6497511AE
9	McGUIRE-1 10 YR RV ISI MERIDIONAL S	6497511HE	5	McGUIRE-1 10 YR RV ISI MID-TO-LVR SHELL	6497511E
8	McGUIRE-1 10 YR RV ISI LONG SEAMS	6497511HE	4	McGUIRE-1 10 YR RV ISI UP-TO-MID SHELL	6497511C
	DWG	DRAWING TITLE	3	McGUIRE-1 10 YR RV ISI NOZZLE INL-TO-FLG	6497511K
			2	McGUIRE-1 10 YR RV ISI LOGISTICS	6497511HE
			1	McGUIRE-1 10 YR RV ISI COVER SHEET	6497511K
			DWG	DRAWING TITLE	

DRAWN BY R.H.RHODES
CHKD BY R.H.RHODES
PASSED BY
APPVD BY K.G.HACKER
SYS | SPC | DATE
CONTRACT NO.

McGUIRE-1
10 YEAR RV ISI
BOTTOM HD (CIRC)
URSULA EXAMINATION
SHEET 7 OF 11

FRAMATOME TECHNOLOGIES

SCALE 1/4
DRAWING NO. 6005117 E
REV NO. 3

REVISIONS			
REV	DESCRIPTION	DATE	APPROVAL
3	FINAL REPORT-AS SCANNED.	4/9 2001	R.H.RHODES M.G.HACKER

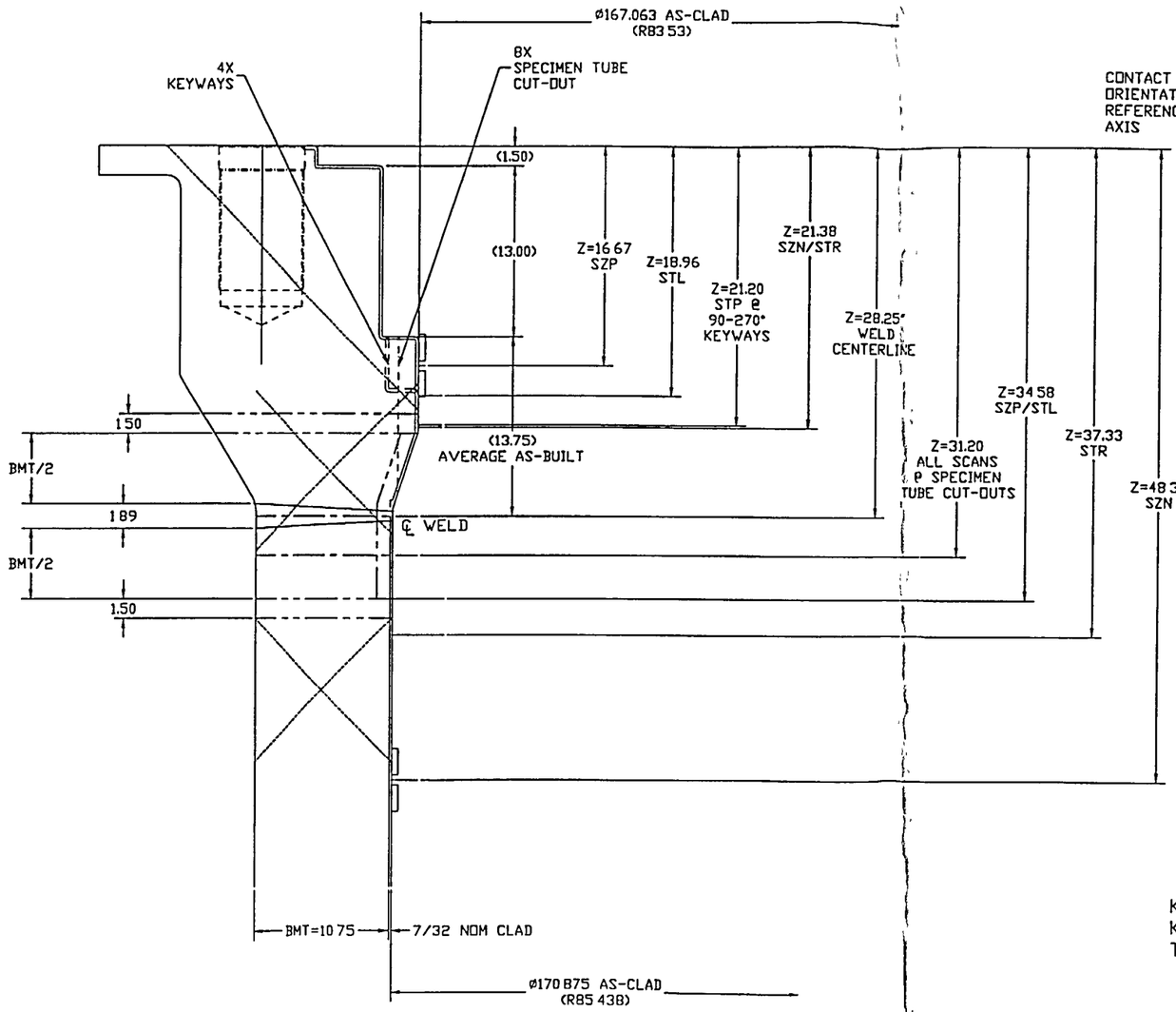

SCAN INDEX = 0.50" FOR DETECTION
0 20" FOR SIZING

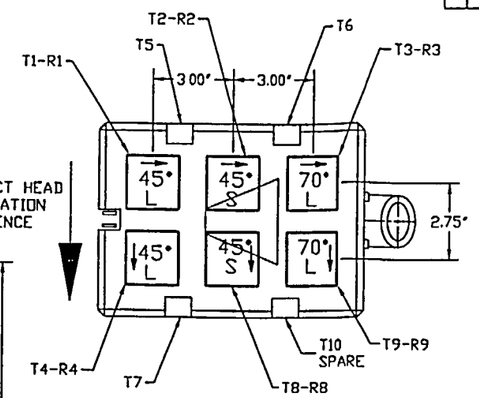

2x3 UT HEAD CONFIGURATION #3
FOR APPENDIX VIII SHELL SCANS
FROM VESSEL ID (AS VIEWED
FROM V-BLOCK ATTACHMENT
SIDE)

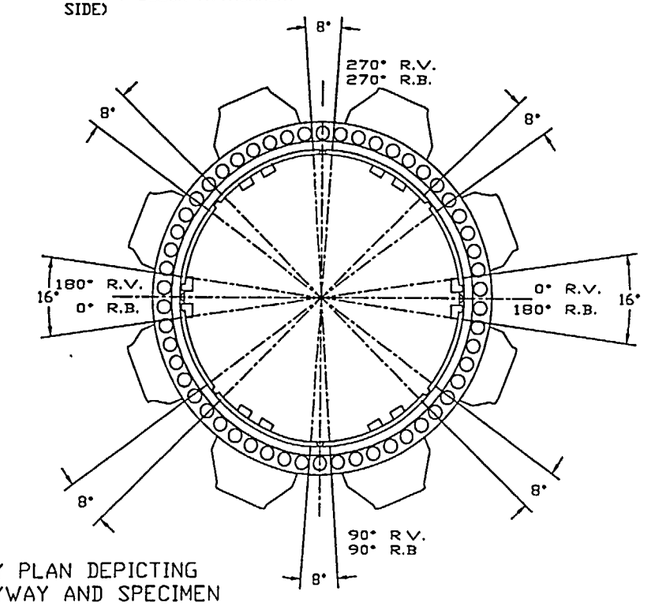

KEY PLAN DEPICTING
KEYWAY AND SPECIMEN
TUBE CUT-OUTS

APPENDIX VIII
W01
1RPV 7-442
B01.030.002

FILENAME
DISK No
DWG

REFERENCE DRAWINGS (CONT.)		
11	McGUIRE-1 10 YR RV ISI OUTLET NOZZLE	6005114E
10	McGUIRE-1 10 YR RV ISI INLET NOZZLE	6005116E
9	McGUIRE-1 10 YR RV ISI MERIDIONALS	6005119E
8	McGUIRE-1 10 YR RV ISI LONG SEAMS	6005118E
NO.	DRAWING TITLE	DWG. NO.

REFERENCE DRAWINGS		
7	McGUIRE-1 10 YR RV ISI BOTTOM HD (CLAD)	6005117E
6	McGUIRE-1 10 YR RV ISI LVR SHELL-TO-BOTTOM HD	6005116E
5	McGUIRE-1 10 YR RV ISI MID-TO-LVR SHELL	6005115E
4	McGUIRE-1 10 YR RV ISI UP-TO-MID SHELL	6005114E
3	McGUIRE-1 10 YR RV ISI NOZZLE BELT-TO-FLG	6005113E
2	McGUIRE-1 10 YR RV ISI LOGISTICS	6005112E
1	McGUIRE-1 10 YR RV ISI COVER SHEET	6005111E
NO.	DRAWING TITLE	DWG. NO.

DRAWN BY R.H.RHODES
CHK'D BY
PROJ'D BY M.G.HACKER
APPV'D BY M.G.HACKER
SYS SPEC DATE
CONTRACT NO.

McGUIRE-1
10 YEAR ISI
NOZZLE BELT-TO-FLG
URSULA EXAMINATION
SHEET 3 OF 11

FRAMATOME TECHNOLOGIES

SCALE
DRAWING NO. 6005113 E
REV NO. 3