GE Nuclear Energy

NEDC-32988-A
Revision 2
Class II
DRF A13-00464
December 2002

Technical Justification to Support Risk-Informed Modification to Selected Required Action End States for BWR Plants

BWR Owners' Group
Risk-Informed Technical Specification Committee

GE Nuclear Energy

175 Curtner Avenue
San Jose, CA 95125

NEDC-32988-A
Revision 2
Class II
DRF A13-00464
December 2002

Technical Justification to Support Risk-Informed Modification to Selected Required Action End States for BWR Plants

BWR Owners' Group
Risk-Informed Technical Specification Committee

IMPORTANT NOTICE REGARDING CONTENTS OF THIS REPORT

Please Read Carefully

The only undertakings of General Electric Company (GE) respecting information in this document are contained in the contract between the Boiling Water Reactors Owners' Group (BWROG) and GE, as identified in the respective utilities' BWROG Standing Purchase Order for the performance of the work described herein, and nothing in this document shall be construed as changing those individual contracts. The use of this information, except as defined by said contracts, or for any purpose other than that for which it is intended, is not authorized; and with respect to any other unauthorized use, neither GE nor any of the contributors to this document makes any representation or warranty and assumes no liability as to the completeness, accuracy, or usefulness of the information contained in this document.

PARTICIPATING UTILITIES

The utilities listed below contributed to the development of this report. However, while this report has been endorsed by a substantial number of the members of the BWR Owners' Group, it should not be interpreted as a commitment of any individual member to a specific course of action. Each member must formally endorse the BWROG position in order for that position to become the member's position.

Utility	Plant	BWR Type	Containment Type
Alliant Utilities Inc	Duane Arnold	4	I
AmerGen-CPS	Clinton	6	III
Carolina Power & Light	Brunswick 1 & 2	4	I
ComEd	Dresden 2 & 3 Quad Cities 1 & 2 LaSalle 1 & 2	3 3 5	I I II
Detroit Edison	Fermi 2	4	I
Energy Northwest	Columbia Generating Station	5	II
Entergy Nuclear Generating Co.	Pilgrim	3	I
Entergy Operations Inc.	River Bend Grand Gulf	6 6	III III
FirstEnergy	Perry 1	6	III
GPU Nuclear	Oyster Creek	2	I
Nebraska Public Power District	Cooper	4	I
New York Power Authority	FitzPatrick	4	I
Niagara Mohawk Power Corp.	Nine Mile Point 1 Nine Mile Point 2	2 5	I II
Northern States Power	Monticello	3	I
PECO Energy	Peach Bottom 2 & 3 Limerick 1 & 2	4 4	I II
PPL Corp.	Susquehanna 1 & 2	4	II
Public Service Electric & Gas	Hope Creek	4	I
Southern Company Nuclear	Hatch 1 & 2	4	I
Tennessee Valley Authority	Browns Ferry 2 & 3	4	I
Vermont Yankee Nuclear Power	Vermont Yankee	4	I

ABSTRACT

This document provides the results of the application of risk informed analyses to identify improvements in final actions specified for inoperable conditions in BWR Technical Specifications. The analyses were conducted using an existing Probabilistic Safety Analysis (PSA) model for a BWR-4 plant. This plant model was modified to reflect the different shutdown modes specified in Technical Specifications. The risk related to the current cold shutdown end states were then compared to the risk of staying in hot shutdown while equipment is being restored to an operable condition.

The analyses conclude that plant safety and operational improvements can be achieved by remaining in hot shutdown for several inoperable conditions while equipment is being restored. The proposed end state improvements provide more systems and operational flexibility while avoiding risk sensitive cold shutdown required actions and alignments. The conclusions are applicable for all the BWR products (BWR-2 through 6).

This bounded report contains the following sections:

I. **NRC's Safety Evaluation Report**

II. **Responses to NRC's Request for Additional Information (RAI)**
(additional 8 RAI resolution related pages attached at the end)

III. **Topical Report NEDC-32988**

I

UNITED STATES
NUCLEAR REGULATORY COMMISSION
WASHINGTON, D.C. 20555-0001

September 27, 2002

Mr Jack Gray, Chairman
BWR Owners Group
Entergy Nuclear Northeast
440 Hamilton Avenue
P O. Box 5029
White Plains, NY 10601

SUBJECT. SAFETY EVALUATION OF TOPICAL REPORT NEDC-32988, REV. 2, "TECHNICAL JUSTIFICATION TO SUPPORT RISK-INFORMED MODIFICATION TO SELECTED REQUIRED ACTION END STATES FOR BWR PLANTS" (TAC NO. MB1054)

Dear Mr. Gray:

On January 5, 2001, the BWR Owners Group (BWROG) submitted Topical Report (TR) NEDC-32988, Rev. 2, "Technical Justification to Support Risk-Informed Modification to Selected Required Action End States for BWR Plants," for staff review. The BWROG supplemented the topical report by letters dated October 26 and November 6, 2001. TR NEDC-32988, Rev. 2 requests changes in the technical specifications (TSs) end states for numerous limiting condition for operation (LCO) requirements. Most of the requested TS changes would permit an end state of hot shutdown (Mode 3), rather than cold shutdown (Mode 4) as required in the current TSs

The staff has found that NEDC-32988, Rev. 2 is acceptable for referencing in licensing applications for GE-designed boiling water reactors to the extent specified and under the limitations delineated in the report and in the enclosed NRC safety evaluation (SE). Licensees requesting a license amendment to revise their end states must include in their amendment requests plant-specific information addressing the stipulations identified in Section 7.0 of the SE.

We do not intend to repeat our review of the matters described in the subject TR and found acceptable, when the report appears as a reference in license applications, except to ensure that the material presented applies to the specific plant involved Our acceptance applies only to the matters approved in the report.

The NRC requests that the BWROG publish an accepted version, within 3 months of receipt of this letter. The accepted version shall incorporate (1) this letter and the enclosed SE between the title page and the abstract, and (2) a "-A" (designating "accepted") following the report identification symbol.

Should our criteria or regulations change so that our conclusions as to the acceptability of the report are invalidated, the BWROG and/or the applicants referencing the topical report will be expected to revise and resubmit their response documentation, or submit justification for the continued applicability of the topical report without revision of their respective documentation.

If you have any questions, please contact Alan Wang, Project Manager for GENE topical reports, at (301) 415-1445.

Sincerely,

William H. Ruland

William Ruland, Director
Project Directorate IV
Division of Licensing Project Management
Office of Nuclear Reactor Regulation

Project No. 691

Enclosure: Safety Evaluation

cc w/encl. See next page

cc:

Mr. Kenneth Putnam, Vice Chairman
BWR Owners Group
Nuclear Management Company
Duane Arnold Energy Center
3277 DAEC Rd.
Palo, IA 52324

Mr. James M. Kenny
Reactor Response Group Chairman
BWR Owners Group
PPL Susquehanna, LLC
Two North Ninth Street
M/C GENA6-1
Allentown, PA 18101-1179

Mr H. Lewis Sumner
Southern Nuclear Company
40 Inverness Center Parkway
PO Box 1295
Birmingham, AL 35242

Mr. Carl D. Terry
Vice President, Nuclear Engineering
Niagara Mohawk Power Corporation
Nine Mile Point - Station
OPS Bldg/2nd Floor
PO Box 63
Lycoming, NY 13093

Mr. Thomas G. Hurst
GE Nuclear Energy
M/C 782
175 Curtner Avenue
San Jose, CA 95125

Mr. Thomas A Green
GE Nuclear Energy
M/C 782
175 Curtner Avenue
San Jose, CA 95125

Mr. William H. Bolke
Exelon
1400 Opus Place, Suite 400
Downers Grove, IL 60515

Mr. William A Eaton
ENTERGY
Grand Gulf Nuclear Station
P.O. Box 756
Port Gibson, MS 39150

Mr. Mark Bezilla
PSEG NUCLEAR
Hope Creek Generating Station
P.O. Box 236
M/C H07
Hancocks Bridge, NJ 08038

Mr. James F. Klapproth
GE Nuclear Energy
M/C 706
175 Curtner Avenue
San Jose, CA 95125

UNITED STATES
NUCLEAR REGULATORY COMMISSION
WASHINGTON, D C. 20555-0001

SAFETY EVALUATION BY THE OFFICE OF NUCLEAR REACTOR REGULATION

TOPICAL REPORT NEDC-32988, REV 2

"TECHNICAL JUSTIFICATION TO SUPPORT RISK-INFORMED MODIFICATION TO SELECTED REQUIRED ACTION END STATES FOR BWR PLANTS"

PROJECT NO. 691

1.0 INTRODUCTION

By letter dated January 5, 2001 (Reference 1), the Nuclear Energy Institute (NEI) and the Boiling Water Reactors Owners Group (BWROG) submitted Topical Report NEDC-32988, Rev. 2, "Technical Justification to Support Risk Informed Modification to Selected Required Action End States for BWR Plants," for review by the NRC staff. The BWROG supplemented the topical report by letters dated October 31, 2001 (Reference 2) and November 6, 2001 (Reference 3).

The topical report provides the technical analysis to support the technical specification (TS) changes based on risk information. The change would allow hot shutdown (Mode 3) rather than requiring cold shutdown (Mode 4) for selected TS end states. This topical report is similar to the topical report the staff approved for pressurized water reactors (PWRs) on July 17, 2001. This topical report provides the basis for changes to the BWR-4 and BWR-6 standard TSs (STS) (References 4 and 5).

Title 10 of the Code of Federal Regulations, (10 CFR), Section 50.36, "Technical Specifications" (Reference 6), states that "when a limiting condition for operation of a nuclear reactor is not met, the licensee shall shutdown the reactor or follow the remedial action permitted by the technical specification until the condition can be met." TSs provide these actions and associated completion time (CT). If the limiting condition for operation (LCO) or the remedial action cannot be met within the CT, the reactor is required to be shut down. When the plant TSs were originally written, the shutdown condition or end state specified was usually cold shutdown.

Each LCO, stated in the TSs, defines the actions to be taken in the event the LCO is not met. In current TS when an LCO is not met, the TS "actions" call for compensatory measures to be taken within some CT. If such compensatory measures are not taken in time or if directed by the actions, the plant must be placed in a mode or other specified "plant condition" where the LCO does not apply. Unless otherwise specified in the individual TS, LCO 3.0.3 currently requires that a BWR plant be placed in Mode 4 (i.e., cold shutdown). This requirement has established Mode 4 (cold shutdown for BWRs) as the end state for most TS action statements

However, preliminary risk and operational considerations have indicated that end state modifications could be beneficial. For example, establishing Mode 3 (hot shutdown for BWRs) instead of Mode 4 as the end state for several TS action statements could reduce operational costs without compromising safety and may actually enhance safety.

The BWROG followed up on the above mentioned preliminary risk and operational considerations by performing a detailed risk-informed study. The aim of this study has been to identify and propose changes in end states for all BWR plants. Such a study is documented in report NEDC-32988, Rev. 2, "Technical Justification to Support Risk-Informed Modification to Selected Required Action End States for BWR Plants." Therefore, this report provides the technical basis for changing permitted actions to include an end state of hot shutdown when certain LCOs are not met, rather than the current cold shutdown requirement. The request is limited to: (1) those end states where entry into the shutdown mode is for a short interval, (2) entry is initiated by inoperability of equipment or a restriction on a plant operational parameter, unless otherwise stated in the applicable TS, and (3) the primary purpose is to correct the initiating condition and safely return to power.

The BWROG compared the core damage frequencies during the two modes of operation using the probabilistic risk assessment (PRA) for a typical BWR-4 plant assuming the inoperable conditions specified in TSs.

Important insights from the assessment of the applicability of the representative BWR-4 plant results were applied to other BWR plants through sensitivity studies accounting for design and operational differences and/or direct comparison of features using risk insights for the representative BWR-4 plant. Therefore, the results are applicable to all the BWR models (BWR/2 through 6). In addition to quantitative analysis, the BWROG evaluated the two modes of operation based on defense-in-depth considerations and then proposed a list of end state changes.

2.0 BACKGROUND

The TSs for BWR plants define five operational modes:

Mode 1 - power operation. The reactor mode switch is in run position.

Mode 2 - startup. The reactor mode switch is in the refuel position (with all reactor vessel head closure bolts fully tensioned) or in startup/hot standby position.

Mode 3 - hot shutdown. The reactor coolant system (RCS) temperature is above 200°F (TS specific) and the reactor mode switch is in shutdown position (with all reactor vessel head closure bolts fully tensioned).

Mode 4 - cold shutdown. The RCS temperature is equal or less than 200°F and the reactor mode switch is in shutdown position (with all reactor vessel head closure bolts fully tensioned).

Mode 5 - refueling. The reactor mode switch is in shutdown or refuel position, and one or more reactor vessel head closure bolts are less than fully tensioned.

Criticality is not allowed in Modes 3 through 5.

The BWROG request would generally allow a Mode 3 end state rather than a Mode 4 end state for selected initiating conditions.

Controlling shutdown risk involves controlling conditions that can cause potential initiating events and responding to initiating events that do occur. Initiating events are a function of equipment malfunctions and human errors. Event response depends on plant sensitivity, ongoing activities, human error, defense-in-depth, and additional equipment malfunctions. In the end state changes considered here, the malfunction of a component or train has generally resulted in a failure to meet a TS and a controlled shutdown has begun because a TS CT has been exceeded.

Most of the current shutdown TSs and design basis analyses were based on the belief that cold shutdown is the safest condition and that the design basis analyses bound credible shutdown accidents. In the late 1980s and early 1990s, the NRC and licensees recognized that this belief was incorrect and took corrective actions to improve shutdown operation. At the same time, standard TSs were developed and many licensees improved their TSs. Since a shutdown rule was expected, almost all TS changes involving power operation, including end state changes, were postponed. However, in the mid 1990s, the Commission decided a shutdown rule was unnecessary in light of industry improvements.

In practice, the realistic needs during shutdown operation are often addressed via voluntary actions and the application of the maintenance rule, 10 CFR 50.65 (Reference 7). In some cases, the most desirable action cannot be achieved because of existing TS limitations.

3.0 ASSESSMENT APPROACH

The staff performed a comparison between the current (Mode 3) and the proposed (Mode 4) end state, with respect to the means available to perform critical functions (i.e., functions contributing to the defense-in-depth philosophy) whose success is needed to prevent core damage and containment failure and mitigate radiation releases. This comparison was performed to demonstrate that the systems available to safely shut down the plant and maintain it in a safe shutdown condition are comparable in both Modes 3 and 4. The major differences between the systems available in Modes 3 and 4 for core decay heat removal and containment heat removal are given below:

Systems Available for Core Decay Heat Removal

System	Mode 3	Mode 4
Power conversion system (PCS)	A	NA
High pressure coolant injection/high pressure core spray (HPCI/HPCS)	A	HPCI (NA), but HPCS (A - BWR 5/6)
Reactor core isolation cooling/inventory control (RCIC/IC)	A	NA

System	Mode 3	Mode 4
Control rod drive (CRD)	A	A
Low pressure core spray/containment spray (LPCS/CS)	A*	A
Low presure coolant injection/residual heat removal (LPCI/RHR)	A*	A
Condensate system	A*	A
Service water cross-tie	A*	A
Fire water	A*	A

A - system available; NA - not available; * - requires reactor pressure vessel (RPV) blowdown

Systems Available for Containment Heat Removal

System	Mode 3	Mode 4
PCS	A*	NA
RHR	A*	A
Containment vent	A	A

* - requires RPV depressurization with 2-3 safety relief valves (SRVs).

For core decay heat removal, BWR-4 plants have nine systems during Mode 3, but only six systems available during Mode 4. BWR-5/6 plants have nine systems available during Mode 3 and seven systems available during Mode 4.

For containment heat removal, one more system is available in Mode 3 than in Mode 4.

Therefore, in general, more systems for core decay heat and containment heat removal are available during Mode 3 than in Mode 4.

With this perspective, the staff addresses each of the critical safety functions identified in Reference 1 that must be maintained during shutdown operation:

Reactivity control
Reactor overpressure control
Core decay heat removal and inventory control
Containment heat removal
Diesel generators
Electrical divisions

Since the purpose of the requested TS changes is to correct a malfunction and safely and promptly return the reactor to power operation, the staff considered only repairs that (1) maintain the RCS pressure boundary, and (2) maintain containment integrity, heat removal, and electrical capability unless directly involved in the deficiency that is to be corrected.

Reactivity Control

This control is not a concern in Modes 3 and 4, since the reactor is already shut down. It is assumed that the plant shutdown was uneventful and all rods are inserted.

Reactor Overpressure Control

This control is not a concern in Modes 3 and 4, since the reactor is fully shut down. The pressure is usually lower than the normal operating pressure. Even though this is more of a concern for Mode 3 than for Mode 4, SRVs are available in case of an emergency. Furthermore, the SRVs are highly reliable. Also, pressure is reduced if RCIC or HPCI is operating during Mode 3.

Core Decay Heat Removal and Inventory Control

The following systems can provide the core cooling and inventory control function at high reactor pressure:

PCS - steam through main steam isolation valves (MSIVs) to balance-of-plant (BOP) and condensate
HPCI/HPCS systems
RCIC system
CRD system

The following systems can provide core cooling at low pressure:

LPCS/CS
LPCI
Condensate system
SW crosstie system
Fire water system

In Mode 3, the reactor has to be depressurized before the low-pressure systems can be used. The plant emergency operating procedures (EOPs) require the operator to depressurize the reactor manually; however, if the operator does not depressurize in time, the automatic depressurization system (ADS) is automatically started.

The following are the major differences between Modes 3 and 4:

The steam-driven systems (HPCI, RCIC and IC) are available in Mode 3 when the reactor is at high pressure, but they are not available in Mode 4 when the reactor is depressurized.

The PCS decay heat removal path through the steam lines to the condenser is available in Mode 3 but not in Mode 4.

The shutdown cooling (SDC) mode of the RHR system may be available during Mode 3 if the reactor pressure is low enough to clear the high pressure interlock of the RHR pump suction valves. The SDC mode is available during Mode 4.

Thus, more systems can provide this function in Mode 3 than in Mode 4.

Containment Heat Removal

The following systems provide the containment heat removal capacity in Mode 3: PCS, RHR in the suppression pool cooling (SPC) mode, RHR in the containment spray mode, containment venting and the redundant safe shutdown method using SRVs and the RHR system in the SPC mode.

In Mode 4: RHR in the SPC mode, containment venting and the redundant safe shutdown method using SRVs and the RHR system in the SPC mode.

Thus, one more system (the PCS) can provide the containment heat removal function in Mode 3 than in Mode 4.

AC and DC Electric Power Capability

Sufficient AC and DC electrical power capability should be provided to support equipment relied upon for shutdown operation under normal or off-normal conditions. The minimum requirement is normally four sources of AC power (two onsite, two offsite) during Mode 3, the same as for power operation. The usual TS requirement for Mode 4 is one onsite source and one offsite source. For conditions applicable to the CT, the normal power sources should be available unless there are extenuating circumstances such as reduced capability. Elective maintenance should be appropriately curtailed whenever electrical capability is diminished during the CT.

The initiating events that could occur during Modes 3 and 4 are different from those that can occur at full power. The initiating events in Modes 3 and 4 which have the potential to be risk significant are restricted to failure of normally operating systems and their support systems.

Emergent conditions in plant configuration or mode changes, additional structures, systems, and components (SSCs) out-of-service due to failures, or significant changes in external conditions (weather, offsite power availability) may require action prior to conduct of the assessment, or could change the conditions of a previous assessment. In this situation licensees must operate in accordance with the maintenance rule, 10 CFR 50.65. Voluntary licensee initiatives ensure equipment, procedures, and contingency plans sufficient to provide defense-in-depth. Realistic comparisons take all this into account.

The licensee actions associated with safety functions are potentially affected by internal plant conditions as well as by external conditions. An approaching hurricane, an ice storm, or likely thundershower or tornado activity may curtail operator local operation flexibility, disrupt safety functions such as electrical power, or reduce outside power resources available to respond to emergencies. Such conditions are to be considered in planning post-CT operations.

Section 50.65(a)(4) states: "Before performing maintenance activities ... the licensee shall assess and manage the increase in risk that may result from the proposed maintenance activities. The scope of the assessment may be limited to structures, systems, and components that a risk-informed evaluation process has shown to be significant to public health and safety." Regulatory Guide (RG) 1.182 (Reference 8) endorses the revised Section 11 of NUMARC 93-01 (Reference 9) which provides guidance on implementing the provisions of 10 CFR 50.65(a)(4). Section 11 states: "The assessment is required for maintenance activities performed during power operations or during shutdown..... Planning and scheduling of maintenance activities during shutdown should consider their impact on performance of key shutdown safety functions." The BWROG confirmed that the proposed change cannot and does not eliminate the need to follow the maintenance rule, 10 CFR 50.65(a)(4), requirements. The requirement to use the plant configuration risk management plan (CRMP) is still in effect. This means RG 1.182 and NUMARC 93-01 Section 11 guidance are implemented prior to carrying out maintenance.

4.0 RISK ASSESSMENT

4.1 Objectives and Approach

The objective of the BWROG's risk assessment was to show that any risk increases associated with the proposed changes in TS end states are either negligible or negative (i.e., a net decrease in risk).

The BWROG topical report documents a risk-informed analysis of the proposed TS change. PRA results and insights are used, in combination with results of deterministic assessments, to identify and propose changes in "end states" for all BWR plants. This is in accordance with guidance provided in RGs 1.174 and 1.177. The three-tiered approach documented in RG 1.177, "An Approach for Plant-Specific, Risk-Informed Decision Making: Technical Specifications," was followed. The first tier of the three-tiered approach includes the assessment of the risk impact of the proposed change for comparison to acceptance guidelines consistent with the Commission's Safety Goal Policy Statement, as documented in RG 1.174, "An Approach for Using Probabilistic Risk Assessment in Risk-Informed Decisions on Plant-Specific Changes to the Licensing Basis." In addition, the first tier aims at ensuring that there are no unacceptable temporary risk increases during the implementation of the proposed TS change, such as when equipment is taken out-of-service. The second tier addresses the need to preclude potentially high risk configurations which could result if equipment is taken out-of-service concurrently with the implementation of the proposed TS change. The third tier addresses the application of 10 CFR 50.65(a)(4) of the Maintenance Rule for identifying risk significant configurations resulting from maintenance or other operational activities and taking appropriate compensatory measures to avoid such configurations. The scope of the topical report and this safety evaluation (SE) is limited to identifying excluding changes in end state conditions for Mode 3 rather than Mode 4, regardless of the risk.

The risk assessment approach followed by the BWROG includes the following tasks:

- Performance of a generic qualitative risk assessment.

- Performance of a quantitative risk assessment for a pilot plant which includes the following:
  - Comparison of baseline risks between Modes 3 and 4 (i.e., risks when no equipment outages are assumed),
  - Comparison of configuration-specific risks between Modes 3 and 4 (i.e., risks when certain equipment is assumed to be unavailable),
  - Performance of sensitivity studies to investigate the robustness of the results to uncertainties in data and modeling assumptions, and
  - Performance of sensitivity studies to ensure that the conclusions of the quantitative assessment for the pilot plant apply also to other BWR plants.
- Use of risk insights, derived from the qualitative and quantitative generic risk assessments, in the individual TS assessments supporting each of the proposed end state changes.

The objective of the generic qualitative risk assessment is to show that the proposed TS end-state changes maintain defense-in-depth for expected initiating events. This is achieved by performing qualitative risk comparisons between cold shutdown (Mode 4) and hot shutdown (Mode 3). Such comparisons include risk parameters, such as initiating events and mitigating systems, associated with each critical safety function (e.g., reactivity control and core decay heat removal) at the various BWR plants. The objectives of the quantitative risk assessment are (1) to substantiate the conclusion of the qualitative risk assessment by providing numerical results for a representative plant, (2) to investigate the robustness of the results to uncertainties in data and modeling assumptions through sensitivity analyses, and (3) to assess the applicability of the results to other BWR plants through sensitivity analyses accounting for design and operational differences. In addition, specific risk assessments were also performed for several of the proposed TS end state changes to ensure that the specific condition causing the LCO does not increase the risk when the proposed new end state is implemented. Finally, an integrated discussion of the risk significance and defense-in-depth considerations is provided (using risk insights from both the qualitative and quantitative risk assessments) for each proposed TS end state change. This discussion provides useful information which can be used by individual licensees applying for such TS changes to develop guidance in appropriate plant procedures and/or administrative controls to ensure that risk-significant plant configurations are avoided. The staff's review finds that the BWROG's risk assessment approach is comprehensive and follows staff guidance as documented in RGs 1.174 and 1.177.

4.2 Evaluation of the Quality of the Risk Assessment

The risk impact of the proposed end state changes was assessed subject to the following major general assumptions:

- The request is to establish Mode 3 (hot shutdown) instead of Mode 4 (cold shutdown) as the end state for all the selected TS action statements.

- Entry into the shutdown mode under consideration is for a short interval with the primary intent being to repair a non-functional component and return the plant to power as soon as is practical. The BWRs are most likely to stay in hot shutdown for no more than 2 to 3 days and definitely, not more than a week.

- The Mode 4 plant state is defined as the steady state condition with the reactor cooling performed by one RHR loop in the SDC mode and the vessel head tensioned. There is a slight difference between what the TSs define as the beginning of Mode 4 and what is modeled in the risk assessment. The TSs define the beginning of Mode 4 when the reactor coolant temperature decreases below 200°F. However, in actual plant operations the RHR system is engaged in the SDC mode before the reactor coolant reaches 200°F. The risk assessment for Mode 4 assumes that the RHR is engaged in the SDC mode, even though the temperature may be slightly above 200°F.

- The assessed risks for both Mode 3 and Mode 4 operation are for steady-states.

The staff finds that these assumptions adequately represent the proposed changes and can be used in PRA models to compare risks between Mode 3 and Mode 4 associated with short duration repairs. This comparison can be made by considering only steady state risks because transition risks, as is discussed later in this SE, are about equal for the two end states or slightly favor Mode 3 as the end state.

The quality of the risk assessment is a very important part of any risk-informed license amendment review. In this case, both the qualitative and quantitative risk assessments must be of adequate quality and completeness to support their intended purposes. Regarding the qualitative risk assessment, the comparisons between current and proposed end states for the various BWR plants must be of adequate quality and completeness to ensure confidence in the robustness of the conclusion that the proposed TS end state changes maintain defense-in-depth for expected initiating events and that all expected initiating events were addressed in the analysis. Regarding the quantitative risk assessment, the various models (including assumptions and data) and sensitivity studies must be of adequate quality and completeness (e.g., with respect to initiating events and failure modes of the various safety systems) to provide confidence in the robustness of the conclusion that the risk will not increase if the proposed new TS end states are approved and implemented. The staff's evaluation of the qualitative and quantitative risk assessments are documented in Sections 4.2.1 and 4.2.2, respectively, of this SE.

4.2.1 Qualitative Risk Assessment

The qualitative risk assessment is a comparison between Modes 3 and 4 operation at the various BWR plants. This comparison, which assesses qualitatively the means that exist at each BWR plant to maintain critical safety functions for expected initiating events, contains the following three parts:

- Assessment of critical safety functions at shutdown,
- Generic comparison of risks at shutdown, and
- Comparison of safety and operational features at shutdown among BWR plants.

Several critical safety functions at shutdown (reactor overpressure control, core decay heat removal and containment integrity heat removal) were identified based on insights from previous risk studies. The means utilized at several BWR plants to perform each of the critical functions during Mode 3 (hot shutdown) and Mode 4 (cold shutdown) are discussed and used in the generic (i.e., without reference to a specific plant) comparison of risks.

In the generic comparison of risks at shutdown, Mode 3 and Mode 4 risks are qualitatively compared to each other by discussing the likelihood of the various initiating events and the availability of mitigating systems at each plant operating condition. This generic comparison of risks is complemented by a comparison of safety and operational features among BWR plants. Such a comparison is needed to ensure that the conclusions of the generic qualitative risk assessment are valid for each specific BWR plant.

The staff finds that the qualitative risk assessment is of adequate quality and completeness to support a conclusion that the proposed TS end state changes maintain defense-in-depth based on examination of the following:

- Challenges and mitigating capabilities of BWR plants and comparison between current and proposed end states;
- Documentation of the various design and operational features used to mitigate shutdown accidents at BWR plants; and
- Proper use of results and insights from previous deterministic and probabilistic studies.

4.2.2 Quantitative Risk Assessment

A quantitative risk assessment of current and proposed end states (corresponding to shutdown Modes 4 and 3, respectively) was performed for a representative BWR plant with typical BWR-4 plant features. The scope was to provide a comparison of the risks associated with either staying in Mode 3 or going to Mode 4 to carry out equipment repair. Variability in safety and operational features among BWR plants was addressed by a series of direct comparisons of features as well as by sensitivity studies to ensure that the conclusions of the quantitative assessment for the generic BWR-4 plant apply to all BWR plants.

The staff reviewed the quality of the quantitative risk assessment to ensure that:

- Initiating events, accidents sequences, and failures found to be significant contributors to shutdown risk in previous studies have been addressed;

- Important assumptions made and data used are reasonable;

- Important uncertainties in data and modeling assumptions were identified and appropriate sensitivity studies were performed to provide confidence in the conclusions regarding the proposed TS end states; and

- Design and operational differences among the various BWR plants were identified and appropriate sensitivity studies were performed which show that the conclusions of the quantitative risk assessment apply to all BWR plants.

The quantitative risk analysis was performed using PRA models of Modes 3 and 4 for internal initiating events. These models were developed by modifying the full power PRA models of the representative BWR-4 plant. This modification involved developing new accident event trees, including new or modified fault trees, for several initiating events applicable to the shutdown modes of interest. Such initiating events were selected from a broad list of postulated initiating events by screening out those events that either do not apply at shutdown or are not risk significant based on previous PRA insights. The success criteria for the various safety functions were derived from the full power PRA after accounting for the reduced decay heat levels in the shutdown modes. The developed event and fault trees were quantified for the Mode 3 and Mode 4 base cases (i.e, assuming no equipment outages), as well as for several other cases reflecting the LCO conditions for which an end state change is requested. The Mode 3 and 4 core damage frequency (CDF) results were used to identify important risk contributors and investigate the sensitivity of the risk assessment results to important uncertainties in data and modeling assumptions.

The quantitative risk assessment does not include risks from external events (dominated by seismic events, internal fires and internal floods), risks associated with transitions from one mode of operation to another or risks in terms of large early release frequency (LERF). The BWROG used the following qualitative arguments to justify not assessing such risks:

- Risks associated with external events are smaller when Mode 3 instead of Mode 4 is selected as the end state for the following reasons:

  - Seismic events, which are equally likely in either mode, have a larger impact on the plant accident mitigation capability during Mode 4 than during Mode 3. A seismic event is very likely to result in an unrecoverable loss of offsite power event. Also, a seismic event is more likely to disable the condensate and fire water systems than the emergency core cooling system (ECCS). Since the RCIC and HPCI systems, which are designed for seismic loads, are available in Mode 3 and not in Mode 4, the plant ability to prevent core damage is higher in Mode 3 than in Mode 4.

  - Internal fire and flood events are equally likely to occur during Mode 3 or Mode 4, during either mode the same fire or flood event would impact the same equipment, most likely equipment located in the affected fire or flood zone. Because there are more systems available for accident mitigation in Mode 3 than

in Mode 4, the plant's ability to prevent core damage is at least as good in Mode 3 as is in Mode 4.

- The only transition risk which needs to be considered in the comparison of risks between the proposed and the current end states is the risk associated with the transition from Mode 3 to Mode 4. This risk is primarily due to the likelihood of a drain-down event while the RHR valves are being aligned for shutdown cooling. This transition risk, believed to be small, is most likely avoided when Mode 3 instead of Mode 4 is selected as the end state for short duration repairs. Therefore, there is no need to assess such a risk because it supports the position that it is safer to stay in Mode 3 rather than go to Mode 4.

- During power operation, large early releases are the result of (1) energetic containment failure due to a high pressure core melt, (2) a containment bypass event, and (3) a core damage event occurring in combination with an unisolated containment. Compared to power operation, Mode 3 or Mode 4 operation is associated with lower initial energy level, reduced fission product inventory level and reduced decay heat load. Due to the combined effect of these factors, even though the initial RCS pressure during Mode 3 is higher than during Mode 4, the likelihood of large early release in Modes 3 and 4 is very low. These factors serve to provide time for the operator to respond to serious plant upsets and, consequently, they contribute to delaying the core melt progression and reducing radiation releases. Therefore, any potential increase due to changing the end state is negligible.

The BWROG's and the staff's review identified several areas of uncertainty, in both data and modeling assumptions, associated with the shutdown models of the representative BWR-4 plant which could have an impact on results and conclusions, including the following:

- Accident initiating event frequencies used in the risk analysis;
- The failure rate of containment vent valve;
- Failure rate of operator to vent the containment;
- Common cause failure of all emergency diesel generators (EDGs).

The identified areas of uncertainty were evaluated to determine how they impact the results and conclusions of the quantitative risk assessment. Major risk insights from this evaluation, which included whenever necessary the performance of sensitivity studies, are documented in Sections 4.3 and 4.4 of this SE.

The BWROG's and the staff's review identified several important design and operational differences between the various BWR plants and the representative BWR-4 plant used in the quantitative risk assessment. The risk impact of such differences was investigated by a combination of quantitative sensitivity studies and qualitative comparison of features. The purpose of the investigation was to extend the results and conclusions of the quantitative risk assessment to other BWR product lines beyond the representative BWR-4 plant. Some important design and operational differences that were investigated are:

- BWR-2 and early BWR-3 product line plants are equipped with ICs instead of RCIC systems.

- BWR-2 plants are equipped with eight CS pumps in two loops with two pumps needed for successful core cooling. The representative BWR-4 plant model includes two CS pumps in two loops and four LPCI pumps with any one pump being sufficient to provide successful core cooling.

- BWR-2 plants have no HPCS or HPCI pumps. The representative BWR-4 plant model includes one HPCI pump.

- Certain BWR-4 plants are equipped with four CS pumps in two loops with two pumps in a loop needed for successful core cooling. The representative BWR-4 plant model includes two CS pumps in two loops with one pump in a loop needed for successful core cooling.

- BWR-5 and BWR-6 plants are equipped with a motor-driven HPCS system which is powered by an independent diesel generator instead of the steam-driven HPCI system used by the representative BWR-4 plant model.

- There is variability among BWR plants regarding the number of ADS valves as well as the number of SRVs which can be used to depressurize the reactor manually in case of ADS failure.

- There is variability among BWR plants regarding procedures and training for aligning the fire water system for core cooling in Mode 3 (requires successful depressurization with three SRVs) and in Mode 4.

- There is variability among BWR plants regarding procedures and training for aligning the CRD system for core cooling in Modes 3 and 4.

- There is variability among BWR plants regarding the number of pumps for LPCS/CS and LPCI as well as regarding the availability of service water cross-tie to the LPCI and fire water pumps. The BWR-2 and early BWR-3 plants have fewer low pressure makeup systems.

- Some BWR plants do not have the capability to align low pressure ECCS pumps to take suction from the condensate storage tank (CST) as is the case for the representative BWR-4 plant used in the quantitative risk assessment.

- There is variability among BWR plants regarding the number and type of feedwater pumps. All plants have at least two feedwater pumps which can be all motor-driven, all steam-driven or a combination of both types.

- There is variability among BWR plants regarding support systems. Important differences are in the number of EDGs, electrical divisions and service water loops.

The identified design and operational differences were evaluated to determine how they impact the results and conclusions of the quantitative risk assessment. Major risk insights from this evaluation, which included whenever necessary the performance of sensitivity studies, are documented in Sections 4.3 and 4.4 of this SE.

The staff concludes that the quality of the quantitative risk assessment, including the sensitivity studies performed to address uncertainties and differences among plants, is adequate to show that there are no significant risk increases associated with the proposed TS end state changes for BWR plants.

4.3 Risk Insights from the Qualitative Risk Assessment

The BWROG report documents a generic qualitative comparison of shutdown risks in Modes 3 and 4 which aims to show that the proposed TS end state changes do not decrease defense-in-depth. Mode 3 and Mode 4 risks and defense-in-depth are qualitatively compared by discussing the means used to address critical functions and the availability of systems needed to mitigate likely accident initiating events. This generic risk comparison is complemented by a comparison of safety and operational features among BWR plants; a comparison needed to ensure that the conclusions of the generic qualitative risk assessment are valid for each BWR plant. It should be noted that the qualitative comparison of risks is based on a plant configuration which does not include any outages for maintenance. Comparison of risks between Modes 3 and 4 when specific maintenance outages are taking place are part of the quantitative risk assessment discussed in Section 4 of this SE.

Important insights regarding the various means used to accomplish critical functions and mitigate accidents occurring in Modes 3 and 4 are listed below:

- The means used to achieve inventory control, reactivity control, reactor overpressure control, containment integrity control, and power availability are approximately equally reliable in Modes 3 and 4.

- More means are available to perform the core decay heat removal critical function while the plant is operating in Mode 3 than when it is operating in Mode 4. For initiating events occurring in Mode 3, both the high and the low pressure systems can be used to provide core cooling. Although the high pressure systems can be used directly, the low pressure systems can be used following reactor depressurization which can be achieved reliably.

  For initiating events occurring in Mode 4, only the low pressure systems can be used to provide core cooling (HPCS is available for BWR5/6). No credit is taken for using the high pressure systems when the low pressure systems fail during loss of RHR with subsequent re-pressurization of the reactor. The reason is that in Mode 4, the reactor is already depressurized and the steam driven high-pressure systems secured. They are not immediately available for loss of level or loss of cooling transients. Also, they are not required to be available. Following a transient initiator in Mode 4, the operator would use available low pressure water makeup system such as LPCI, LPCS, condensate, fire

water system or RHR service water system crosstie. The operator would normally not attempt to use RCIC, for it would take too long to depressurize and initiate. In the highly unlikely scenario that repressurization from Mode 4 is required to either maintain level or cooling or if repressurization occurs because MSIVs fail closed, RCIC initiation would be a high stress human action and would have additional transition risk. Therefore, no credit was taken for HPCI or RCIC in the Mode 4 PRA. For BWR 5 and 6s, the motor driven HPCS pump would be available. However, credit for this was not taken in the generic model. This is primarily because many other low pressure injection and cooling water systems are available.

- More means are available to perform the containment heat removal critical function while the plant is operating in Mode 3 than when it is operating in Mode 4. In Mode 4, the RHR system or containment venting can be used to remove heat from the containment. These means can be used also for initiating events occurring in Mode 3 following reactor depressurization, which can be achieved reliably. The difference is that the PCS can provide containment cooling in Mode 3 but not in Mode 4.

- In Mode 3 operation, the reactor has to be depressurized before the low pressure systems can be used for core or containment cooling. This action can be achieved reliably because the automatic initiation of the ADS is backed up by manual initiation based on emergency operating procedures.

Potentially significant accident initiating events at shutdown and available mitigating systems were evaluated to establish the acceptability of Mode 3 end state as the default action for most TSs where partial equipment availability is assured and short-term repair is possible. Important insights are:

- All potentially risk significant initiating events that can occur while the plant is operating in Mode 3 can be represented (or subsumed) by the following:

  - Loss of coolant accidents (LOCAs);
  - Loss of offsite power (LOOP);
  - Loss of power conversion system; and
  - Loss of service water.

- All potentially risk significant initiating events that can occur while the plant is operating in Mode 4 can be represented (or subsumed) by the following:

  - Loss of coolant inventory;
  - LOOP;
  - Loss of RHR in the SDC mode; and
  - Loss of service water.

- The risk impact of LOCAs, as pressure-driven initiating events, are not as significant in Modes 3 and 4 as they are in Mode 1. The major contributor to this initiator is loss of inventory caused by incorrect valve lineups Since incorrect valve lineups are more

likely during Mode 4 operation, the risk associated with LOCAs will be smaller if Mode 3 is adopted as the end state.

- LOOP is an important initiating event in both Modes 3 and 4 with approximately the same frequency. Therefore, their risk impact is lower when there is more redundancy and diversity of the mitigating systems, as is the case when the plant is operating in Mode 3. The steam-driven high pressure core cooling systems, available in Mode 3 operation, play a major role in mitigating accidents initiated by LOOP events, including station blackout events.

- Loss of the power conversion system in Mode 3 and loss of RHR in the SDC mode in Mode 4 are important initiating events of the same order of magnitude frequency. Since there is much more redundancy and diversity of the mitigating systems when the plant is operating in Mode 3, the risk impact associated with the loss of the PCS initiating event (occurring in Mode 3) is lower than the risk impact associated with the loss of RHR SDC initiating event (occurring in Mode 4).

- Loss of service water is an important initiating event in both Modes 3 and 4 with approximately the same frequency. This initiator disables all core and containment cooling systems using the service water system to transfer heat to the ultimate heat sink, such as the RCIC system and the RHR system. In general, accidents initiated by loss of service water in either Mode 3 or Mode 4 are mitigated by using low pressure injection systems and containment venting. Since the SRVs are highly reliable, the risk impact associated with this initiating event is approximately the same for events occurring in Modes 3 and 4.

A comparison of risk important safety and operational features among BWR plants was made to show that the conclusions of the generic qualitative risk assessment are valid for each BWR plant. To facilitate the discussion, the safety features available in each of the BWR product lines are listed by safety function in Table 1. The differences shown in Table 1 do not change the conclusions of the qualitative risk assessment for the following reasons:

- Although there are some differences among BWR plants regarding the means used for inventory makeup and heat removal at high pressures, all BWR plants have such features. Therefore, the conclusion that more means are available to perform the core decay and containment heat removal critical functions in Mode 3 than in Mode 4 is valid for any plant.

Table 1 Comparison of Safety Features of BWR Plants.

Safety Features by Safety Function	BWR-2	BWR-3	BWR-4	BWR-5	BWR-6
High Pressure Makeup					
HPCI or HPCS	None	HPCI (if no IC)	HPCI	HPCS	HPCS
RCIC or IC	IC	RCIC or IC	RCIC	RCIC	RCIC
CRD Pumps	2	2	2	2	2
Rx Depressurization					
ADS Valves	5 to 6	3 to 5	4 to 7	7	7 to 8
Low Pressure Makeup					
CS/LPCS Pumps/Loops	8/2	2/2	2/2 to 4/2	1/1	1/1
LPCI Pumps	None	4	4	3	3
Condensate Injection	Yes	Yes	Yes	Yes	Yes
Service Water Cross-tie to LPCI	None	None to Yes	None to Yes	None to Yes	None to Yes
Fire Water Pumps	None	2 to 3	1 to 3	None	None to 3
Heat Removal					
Motor-Driven (MD) or Steam-Driven (SD) Feedwater (FW) Pumps	2MD/1SD to 3MD	2 MD to 3 MD	2 to 3 MD or 2 to 3 SD	1 MD/2 SD or 3 MD or 2 SD	1 MD/2 SD or 3 MD or 2 SD
RHR Loops	3	2	2	2	2
Containment Venting	None	Yes	None to Yes	None to Yes	None to Yes
Support Systems					
EDGs	2	2	2 to 4	3	3
Electrical Divisions	2	2	2 or 4	3	3
Service Water Loops	N/A	N/A to 2	2	2 to 3	2 to 3

- Although there are differences in the number of ADS valves among BWR plants, there are enough valves for reliable reactor depressurization at all plants. Therefore, the conclusion that for accidents initiated in Mode 3 the reactor can be depressurized reliably so that the low pressure systems can be used is valid for any plant.

- Although there are some differences among BWR plants regarding the means used for inventory makeup and heat removal at low pressures, these differences do not change any conclusions because they impact Mode 3 and Mode 4 risks at a specific plant equally. This is also true for differences among BWR plants regarding support systems.

The above listed insights lead to the conclusion that, in general, plant operation in Mode 3 (hot shutdown) offers at least the same robustness to plant upsets as operation in Mode 4 (cold shutdown). The insights gained from the quantitative risk study (listed below) substantiate this conclusion.

4.4 Risk Insights from the Quantitative Risk Assessment

The objectives of the quantitative study were to (1) substantiate the conclusion of the qualitative risk assessment by providing numerical results for a representative plant, (2) investigate the robustness of the results to uncertainties in data and modeling assumptions through sensitivity studies, and (3) assess the applicability of the results to other BWR plants through sensitivity studies accounting for design and operational differences. The quantitative risk assessment was performed for a representative BWR-4 plant. Important safety features of the representative BWR-4 plant which are available in Modes 3 and 4 to mitigate accidents are listed by safety function in Table 2 of this SE.

The scope of the quantitative risk assessment was to compare the core damage risks associated with either staying in Mode 3 or going to Mode 4 to carry out equipment repairs. This comparison was made for a number of cases based on selected combinations of equipment outages and the results are summarized in Table 3 of this SE. For each of the cases, CDF values were assessed for both the current end state (i.e., Mode 4) and the proposed end state (i.e., Mode 3). In addition to these two CDF values, the change in CDF due to changing the end state from Mode 4 to Mode 3 is also listed in Table 3 for each of the analyzed cases. Such CDF changes, ΔCDF, are reported both in absolute and relative terms. CDF changes shown in parentheses in Table 3 indicate CDF decreases.

Important results and insights from the quantitative risk assessment, which substantiate the conclusions of the qualitative risk assessment by providing numerical results, are listed below:

- The CDF estimates, reported in Table 3, support the requested end state change. These estimates show that staying in Mode 3, rather than going to Mode 4 to carry out equipment repairs, does not have any adverse effect on plant risk and under some circumstances may actually reduce risk. This conclusion is supported by the following:

  - When no equipment is taken out (base case), the CDF for Modes 3 and 4 is essentially identical. The Mode 3 CDF is slightly higher than the Mode 4 CDF.

The resulting difference in CDF, ΔCDF, is about 1.0E-8/year which is insignificant.

Table 2 Safety Features of Representative BWR-4 Plant Available in Modes 3 and 4.

Safety Features by Safety Function	Representative BWR-4 Plant	Available in Mode 3	Available in Mode 4
High Pressure Makeup[1]	HPCI	Yes	No
	RCIC	Yes	No
	2 CRD Pumps	Yes	Yes
Reactor Depressurization	6 ADS Valves	Yes	Not required
Low Pressure Makeup[2]	2 core spray pumps in 2 loops	Yes	Yes
	4 LPCI pumps	Yes	Yes
	Condensate injection	Yes	Yes
	Service water cross-tie to LPCI	Yes	Yes
	3 fire water pumps	Yes	Yes
Heat Removal[3]	2 SD FW pumps	Yes	No
	2 RHR loops	Yes	Yes
	Containment venting	Yes	Yes
Support Systems	2 EDGs	Yes	Yes
	2 electrical divisions	Yes	Yes
	2 service water loops	Yes	Yes

[1]No credit is taken for the high pressure systems following the failure of cooling systems in Mode 4 and subsequent re-pressurization of the reactor.

[2]Manual depressurization using SRVs is required when in Mode 3.

[3]Manual depressurization using SRVs is required to use RHR in SDC mode.

Table 3 **Core Damage Frequency Change due to Changing the End State from Mode 4 to Mode 3 for Selected Combinations of Equipment Outages.**

Case	Description	Mode 4 CDF/yr	Mode 3 CDF/yr	Absolute ΔCDF/yr	Relative ΔCDF/yr (in%)
1	Base Case (no outages)	1.52E-6	1.53E-6	1.0E-8	0.8
2	One LPCS loop out	1.52E-6	1.53E-6	1 0E-8	0 8
3	Both RHR pumps in loop A out	2.26E-5	1.36E-5	(9.0E-6)	(66.3)
4	One SW booster pump out	1.62E-6	1.59E-6	(3.3E-8)	(2.1)
5	One SW booster pump in each loop out	1.67E-6	1.64E-6	(2.8E-8)	(1.7)
6	Two SW booster pumps in one loop out	2.26E-5	1.36E-5	(9.0E-6)	(66.4)
7	One SW pump out	1.56E-6	1.56E-6	(1.0E-9)	(0.1)
8	One SW pump in each subsystem out	1.60E-6	1.60E-6	0.0	0.0
9	One EDG inoperable	7.53E-6	7.54E-6	1.0E-8	0.1
10	Two EDGs inoperable	1.06E-4	1.07E-4	1.0E-7	0.1
11	One EDG & one emergency offsite power out	6.12E-5	6.00E-5	(1.1E-6)	(1.8)
12	Two EDGs & one emergency offsite power out	9.63E-4	9.66E-4	3.1 E-6	0.3
13	4.1kV bus 1F out	1.08E-3	1.94E-4	(8 8E-4)	(457)
14	125V dc bus 1A out	3.54E-5	2.58E-5	(9.5E-6)	(37)
15	HPCI out	1.52E-6	1.55E-6	3.5E-8	2.3
16	HPCI & one LPCI pump out	2.26E-5	1.36E-5	(9.0E-6)	(66)
17	HPCI & one LPCS pump out	1.52E-6	1.55E-6	3.6E-8	2.3
18	RCIC out	1.52E-6	1.57E-6	5.7E-8	3.6

- For the majority of analyzed cases with equipment outages, the CDF for Modes 3 and 4 are approximately equal. In all such cases the resulting ΔCDF, either an increase or a decrease, is insignificant.

- When one or more redundant trains of pieces of important equipment, such as the RHR system, the service water system and the AC and DC power sources, are taken out-of-service, the Mode 3 CDF is significantly lower than the Mode 4 CDF. This indicates that, for outages involving these important systems, the proposed end state change would lead to significant risk reductions.

- Two accident initiating events are major contributors to risk in both Modes 3 and 4: (1) loss of offsite power, and (2) loss of service water. In addition, the loss of RHR in the SDC mode becomes a significant risk contributor when certain equipment, such as one RHR loop, is out during Mode 4.

- Mode 3 and Mode 4 risks are essentially equal when no equipment is taken out even though more systems are available in Mode 3 than in Mode 4 to mitigate accidents. This is due to the high redundancy and reliability of the low pressure systems which are used to mitigate accidents occurring in Mode 4 and also, following depressurization, in Mode 3.

  When certain parts (e.g., components and trains) of low pressure and their support systems are taken out, Mode 4 risks become significantly higher than Mode 3 risks. This is due to the increased importance of the high pressure systems, which are available only in Mode 3, as the redundancy of low pressure systems decreases.

- A common element driving the risk of accidents occurring in both Mode 3 and Mode 4 is containment cooling. All accident sequences initiated in Mode 3 or Mode 4, except for Mode 3 transients with the power conversion system available, require containment heat removal using the RHR pumps (in either the SPC or the SDC mode) or containment venting to avoid core damage. In other words, when an accident is initiated in either Mode 3 or Mode 4, the failure of RHR in both the SPC and SDC modes followed by operator failure to vent the containment leads to core damage, even when all other high and low pressure systems are successful. The contribution of this element to risk depends on the initiating event and the configuration of the plant (i.e., the number and type of unavailable equipment). Some important insights related to this element, which help understand the differences between Mode 3 and Mode 4 risks are:

  - During a station blackout (SBO) event the RHR pumps are unavailable. Therefore, containment venting is required to avoid core damage. Successful containment venting requires coolant injection by the fire water pumps. If the plant operates in Mode 3 when the SBO occurs, there is more time available to align and start the fire water pumps than it is in the case of Mode 4 operation. The reason that more time is available in Mode 3, which increases the probability of success, is due to the fact that in Mode 3 the steam driven RCIC and HPCI pumps are available for initial core cooling.

- If core cooling is lost in Mode 3 (i.e., the PCS is lost) while one RHR loop is out, successful operation of the second RHR loop or successful containment venting is required to avoid core damage. However, if core cooling is lost in Mode 4 (i.e., the operating RHR SDC loop is lost) while one RHR loop is out, successful containment venting is required to avoid core damage. Thus, when an RHR loop is out, the loss of core cooling initiating event is a larger risk contributor in Mode 4 than in Mode 3.

Based on the results of the quantitative risk assessment for the representative BWR-4 plant, one can conclude that in certain cases it is safer to stay in Mode 3 (hot shutdown) than going to Mode 4 (cold shutdown) to carry out equipment repair. For the remaining cases, staying in Mode 3 has no adverse effect on plant risk. The robustness of such a conclusion has been investigated by performing sensitivity studies to assess the impact of uncertainties in data and modeling assumptions. In addition, through sensitivity studies and/or comparison of the differences among the various BWR product lines (summarized in Table 1 of this SE) with the features of the representative BWR-4 plant (summarized in Table 2 of this SE), this conclusion has been extended to all BWR plants.

Important insights from the investigation of the robustness of the results to uncertainties in data and modeling assumptions through sensitivity studies are listed below.

- Based on the review of the risk assessment results, the following three basic events were considered for sensitivity studies: (1) the failure rate of containment vent valves; (2) the operator failure probability to vent the containment; and (3) the common cause failure of all EDGs. The results of such studies are summarized in Table 4. These results indicate that any changes in ΔCDF that could result from changes in data are very small and would not impact the conclusion regarding the proposed TS end state change.

- Accident initiating event frequencies were calculated based on a combination of operating experience and data from previous PRA studies. Because some of these frequencies are important contributors to risk, the sensitivity of the risk assessment results to values assumed for these frequencies was investigated. It was found that when the initiating event frequencies are increased, the resulting difference in CDF, ΔCDF, makes the justification of the proposed change even stronger. Reducing the frequencies reduces the ΔCDF values, which are already low, by less than 1 percent. Therefore, it was concluded that the results and conclusions of the quantitative risk assessment are not sensitive to reasonable changes in the frequencies of the dominant initiating events.

- The robustness of the results, as they impact the conclusions of the risk assessment, is reinforced by many conservative assumptions, such as the ones regarding success criteria for CRD pumps and SRVs (the assumption that two CRD pumps are needed for core cooling to mitigate accidents initiated in Modes 3 and 4 is conservative as is the assumption that three SRVs are needed to depressurize the reactor in order to permit low pressure coolant injection for accidents initiated in Mode 3).

These insights indicate that the results of the quantitative risk assessment are robust and that the conclusions of both the qualitative and quantitative risk assessments do not change when uncertainties in data and modeling assumptions are considered.

Table 4 Sensitivity Studies Used to Investigate the Impact of Uncertainties in Data on the Results of the Quantitative Risk Assessment.

Case	Mode 4 CDF (per year)	Mode 3 CDF (per year)	ΔCDF (per year)
Base Case (no outages)	1.52E-6	1.53E-6	1.0E-8
The failure rate of containment vent valve increased 10 times	3.0E-6	3.2E-6	2.0E-7
The failure rate of containment vent valve was decreased 10 times	1.4E-6	1.4E-6	1.0E-9
The failure probability of operator to vent the containment was increased 10 times	2.5E-6	2.6E-6	1.0E-7
The failure probability of operator to vent the containment was decreased 10 times	1.4E-6	1.4E-6	1.0E-9
The common cause failure of all EDGs was increased 10 times	2.8E-6	2.8E-6	5.0E-9
The common cause failure of all EDGs was decreased 10 times	1.4E-6	1.4E-6	1.0E-9

Important insights from the assessment of the applicability of the representative BWR-4 plant results to other BWR plants, through sensitivity studies accounting for design and operational differences and/or direct comparison of features using risk insights for the representative BWR-4 plant, are listed below:

- BWR-2 and early BWR-3 product line plants are equipped with an IC instead of the RCIC system of the representative BWR-4 plant. The IC and RCIC are both steam driven systems with similar reliability. The only difference, with respect to the function they perform, that could affect ΔCDF is that the RCIC system can be used in Mode 3 to mitigate small LOCAs while the IC cannot be used for that purpose. However, small LOCAs are insignificant contributors to Mode 3 risk. Therefore, the impact that this difference has on the results of the quantitative risk assessment is negligible.

- BWR-2 plants are equipped with eight CS pumps in two loops with two pumps needed for successful core cooling. The representative BWR-4 plant model includes two CS pumps in two loops and four LPCI pumps with any one pump being sufficient to provide successful core cooling. Because both BWR-2 and BWR-4 plants have many low pressure cooling systems, the impact that this difference has on the results of the

quantitative risk assessment is negligible. The same argument is used for other differences in low pressure systems among BWR plants, such as:

- Certain BWR-4 plants are equipped with four CS pumps in two loops with two pumps in a loop needed for successful core cooling while the representative BWR-4 plant model includes two CS pumps in two loops with one pump in a loop needed for successful core cooling; and

- There is variability among BWR plants regarding the number of pumps for LPCS and LPCI as well as regarding the availability of service water cross-tie to the LPCI and fire water pumps. Although the BWR-2 and early BWR-3 plants have fewer low pressure makeup systems than the representative BWR-4 plant, this difference has no impact on the results because all BWR plants have many low pressure cooling systems.

- BWR-2 plants have no HPCS or HPCI pumps. The representative BWR-4 plant model includes one HPCI pump. Based on insights from the quantitative risk assessment for the representative BWR-4 plant, this difference has no significant impact on risk because of the many high and low pressure systems available to mitigate an accident.

- Based on the review of the results, three design and/or operational differences among BWR plants were considered for sensitivity studies. These are:

  - Variability among BWR plants regarding procedures and training for aligning the fire water system for core cooling in Mode 3 (requires successful depressurization with three SRVs) and in Mode 4;

  - Some BWR plants do not have the capability to align low pressure ECCS pumps to take suction from the CST as is the case for the representative BWR-4 plant used in the quantitative risk assessment; and

  - Variability among BWR plants regarding procedures and training for aligning the CRD system for core cooling in Modes 3 and 4.

These results, summarized in Table 5, indicate that any changes in ΔCDF that could result from such design and operational differences are very small and would not impact the conclusion regarding the proposed TS end state change.

Table 5 Impact of Design and Operational Differences on the Results of the Quantitative Risk Assessment for the Representative BWR-4 Plant.

Case	Mode 4 CDF (per year)	Mode 3 CDF (per year)	ΔCDF (per year)
Base case (no outages)	1.52E-6	1.53E-6	1.0E-8
No credit for the fire water system	1.58E-6	1.59E-6	1.0E-8
No credit for capability to align the low pressure ECCS pumps to CST	1.5E-6	1.5E-6	1.0E-9
No credit for the CRD system	1.58E-6	1.59E-6	1.0E-8

- BWR-5 and BWR-6 plants are equipped with a motor-driven HPCS system which is powered by an independent diesel generator instead of the steam-driven HPCI system used by the representative BWR-4 plant model. Both systems have similar reliability to mitigate accidents occurring in Mode 3 and can function during a station blackout since the HPCI system is steam driven and the HPCS system is powered by an independent power source (diesel generator). Although the HPCS system can be used also in Mode 4 (HPCI is available only in Mode 3), this difference does not have a significant impact on the results because of the many core cooling systems available in Mode 3.

- There is variability among BWR plants regarding the number of ADS valves as well as the number of SRVs which can be used to depressurize the reactor manually in case of ADS failure. Reactor depressurization, required to take advantage of the low pressure makeup and heat removal systems for accidents occurring in Mode 3, can be accomplished by either manual opening of selected SRVs or by the ADS. The failure of one or two SRVs or one ADS valve is not a significant contributor to the Mode 3 CDF based on the number of remaining valves available in BWR plants to depressurize the reactor. Therefore, the difference in the number of ADS valves and SRVs among BWR plants does not have a significant impact on the results of the quantitative risk assessment and, thus, does not change the conclusion regarding the proposed TS end state change.

- There is variability among BWR plants regarding the number and type of feedwater pumps. All plants have at least two feedwater pumps which can be all motor-driven, all steam-driven or a combination of both types. Since the representative BWR-4 plant assumes a minimum number of feedwater pumps in relation to other plants, the Mode 3 CDF will be even smaller when more pumps are available. Therefore, this difference among plants does not change the conclusion regarding the proposed TS end state change.

- There is variability among BWR plants regarding support systems. Important differences are in the number of EDGs, electrical divisions and service water loops. Since the representative BWR-4 plant assumes minimum support system redundancy in

relation to other plants, the Mode 3 CDF will be even smaller when more redundancy in support systems is available. Therefore, this difference among plants does not change the conclusion regarding the proposed TS end state change

- Not all BWR plants have containment venting capability, as is assumed for the representative BWR-4 plant. Since containment venting applies to both Mode 3 and Mode 4 accidents, the relative difference in CDF between Modes 3 and 4 would not change if containment venting is not available. Therefore, this difference among plants does not change the conclusion regarding the proposed TS end state change.

These insights indicate that the results of the quantitative risk assessment are robust and that the conclusions of both the qualitative and quantitative risk assessments do not change when the impact of design and operational differences among BWR plants is considered.

The staff believes that the above listed insights substantiate the generic conclusion that plant operation in Mode 3 (hot shutdown) offers at approximately the same, and in some cases may be higher, robustness to plant upsets as operation in Mode 4 (cold shutdown).

Finally, risk insights from both the qualitative and quantitative risk assessments were used in specific TS assessments. Such assessments are documented in Section 4.5 of the BWROG topical report. They provide an integrated discussion of deterministic and probabilistic issues, focusing on specific technical specifications, which are used to support the proposed TS end state. The staff's review finds that the risk insights support the conclusions of the specific TS assessments.

4.6 Conclusions for Risk Assessment

The staff's review finds that the BWROG's risk assessment approach is comprehensive and follows staff guidance as documented in RGs 1.174 and 1.177. In addition, the analyses show that the criteria of the three-tiered approach for allowing TS changes (documented in RG 1.177) are met as explained below:

- Risk Impact of the Proposed Change (Tier 1). The risk changes associated with the proposed TS changes, in terms of mean yearly increases in CDF and LERF, are risk neutral or risk beneficial. In addition, there are no significant temporary risk increases, as defined by RG 1.177 criteria, associated with the implementation of the proposed TS end state changes.

- Avoidance of Risk-Significant Configurations (Tier 2). The performed risk analyses, which are based on single LCOs, have shown that there are no high risk configurations associated with the proposed TS end state changes. The reliability of redundant trains is normally covered by a single LCO. When multiple LCOs occur, which affect trains in several systems, the plant's risk-informed CRMP, implemented in response to the Maintenance Rule [10 CFR 50.65(a)(4)], will ensure that high risk configurations are avoided. As part of the implementation of 10 CFR 50.65 (a)(4) program, licensees are expected to include guidance in appropriate plant procedures and/or administrative controls to preclude high risk plant configurations when the plant is at the proposed end state. The staff finds that such guidance is adequate for preventing risk-significant plant configurations.

- Configuration Risk Management (Tier 3). Licensees have programs in place to comply with 10 CFR 50.65(a)(4) to assess and manage the risk from proposed maintenance activities. These programs can support licensee decisionmaking regarding the appropriate actions to control risk whenever a risk-informed TS is entered.

The generic risk impact of the proposed end state mode change was evaluated subject to the following assumptions:

- The entry into the proposed end state is initiated by the inoperability of a single train of equipment or a restriction on a plant operational parameter, unless otherwise stated in the applicable technical specification;

- The primary purpose of entering the end state is to correct the initiating condition and to return to power as soon as it is practical.

These assumptions are consistent with typical entries into Mode 3 for short duration repairs, which is the intended use of the TS end state changes.

The staff concludes that, in general, going to Mode 3 (hot shutdown) instead of going to Mode 4 (cold shutdown) to carry out equipment repairs does not have any adverse effect on plant risk. Therefore, the staff finds that the risk information provided by the BWROG supports the requested change.

5.0 RISK AND DEFENSE-IN-DEPTH ARGUMENTS

5 1 General Risk Argument

The staff reviewed the risk assessments performed by the BWROG and concluded (Section 4.0 of this SE) that staying in Mode 3 (hot shutdown) instead of going to Mode 4 (cold shutdown) to carry out equipment repairs does not have an adverse effect on plant risk and may actually reduce risk Indeed, the plant risk is considerably smaller in Mode 3 than it is in Mode 4 for many plant configurations associated with several important equipment outages allowed by TS. In addition, the proposed change allows repairs to be made in a plant operating mode with lower risks than full power operation and without challenging the normal shutdown systems. After repairs are made, the plant can be brought to full power operation with the least potential for transients and operator error.

5.2 General Defense-in-Depth Argument

The BWROG proposes several system-specific changes to TS end states. Such changes are described in Section 4.5 of the BWROG topical report together with TS change-specific justifications. Risk insights from both the qualitative and quantitative risk assessments were used in these justifications. In addition to the risk arguments, defense-in-depth arguments are used to justify each system-specific TS change, in accordance with the "integrated decision-making" process of RGs 1.174 and 1.177. The staff's assessment of each specific TS change justification is documented in Section 6.0 of this SE.

A comparison between the current (Mode 3) and the proposed (Mode 4) end state, with respect to the means available to perform critical functions (i.e., functions contributing to the defense-in-depth philosophy) whose success is needed to prevent core damage and containment failure and mitigate radiation releases, leads to the following three conclusions. The first two conclusions are applicable to all proposed specific TS changes. The third conclusion applies only to those TS changes which are related to systems whose function is to mitigate radiation releases associated with design basis accidents (e.g., the MSIV LCS). Because of the commonality of these conclusions, they are listed here to avoid repetition throughout Section 6.0.

- More means are available when the plant is operating in Mode 3 than when it is operating in Mode 4 to perform critical functions, such as core heat removal, containment heat removal and water makeup, whose success is needed to prevent core damage and containment failure. For accidents initiated in Mode 3, both the high (e.g., HPCI/HPCS and RCIC) and the low pressure systems can be used to provide core cooling. Also, the PCS can provide containment cooling in Mode 3, but not in Mode 4. In addition, the availability of the steam-driven high pressure core cooling systems in Mode 3 provide a much better defense-in-depth in mitigating accidents initiated by loss of offsite power, including station blackout events. Although the high pressure systems can be used directly, the low pressure systems can be used following reactor depressurization which can be achieved reliably because the automatic initiation of the ADS is backed-up by manual initiation based on emergency procedures.

- The same means are available when the plant is operating in Mode 3 as when it is operating in Mode 4 for mitigating large early releases. Compared to power operation, Mode 3 or Mode 4 operation is associated with lower initial energy level, reduced fission product inventory level and reduced decay heat load. Due to the combined effect of these factors, the likelihood of large early release in Modes 3 and 4 is very low (as can be determined by a direct comparison to the LERF at power operation). Therefore, any potential increase in LERF that would result from the higher values of these factors in Mode 3, as compared to Mode 4, is negligible. Furthermore, when the improved defense-in-depth with respect to core damage and containment failure prevention in Mode 3 are taken into consideration, a net reduction in LERF during Mode 3 operation is likely.

- The same means are available when the plant is operating in Mode 3 as when it is operating in Mode 4 for mitigating any radiation releases above TS limits, such as those from leaking MSIVs. Compared to power operation, Mode 3 or Mode 4 operation is associated with lower initial energy level, reduced fission product inventory level and reduced decay heat load. Due to the combined effect of these factors, any radiation releases in either Mode 3 or Mode 4 would be considerably smaller than they are when the accident occurs at power operation. For all practical purposes, the magnitude of such releases can be considered comparable. Furthermore, an examination of the likely accident initiating events that could occur in Modes 3 and 4 shows that the major contributor to a LOCA, which has the potential to create the highest pressure in the containment and the largest leak rate through leaking valves, is loss of inventory caused

by incorrect valve lineups. Since incorrect valve lineups are more likely during Mode 4 operation, the magnitude of any radiation releases through leaking valves could be larger in Mode 4 than in Mode 3. Therefore, when the improved defense-in-depth with respect to core damage and containment failure prevention in Mode 3 are also taken into consideration, one can conclude that the frequency of comparable radiation releases through leaking valves, will not be higher for Mode 3 operation than it is for Mode 4 operation.

The staff's review is limited to the concept of allowing the plant to be in Mode 3 rather than Mode 4. The industry TSTF will provide the marked-up changes to the STS. The staff will review the marked-up changes when they are submitted.

In general, the BWROG followed the improved standard technical specifications (ISTS) CT in establishing required mode entry times.

6.0 ASSESSMENT OF PROPOSED TS CHANGES

The staff's review is limited to the concept of allowing the plant to be in Mode 3 rather than Mode 4 for the following TS. The industry TS task force (TSTF) will provide the marked-up changes to the STS. The staff will review the marked-up changes when they are submitted.

1. TS 4.5.1.2 and LCO 3.4.3 (BWR-4); TS 4.5.2.2 and LCO 3.4.4 (BWR-6) - Safety/Relief Valves (SRVs)

The function of the SRVs is to protect the plant against severe overpressurization events. These TSs provide the operability requirements for the SRVs as described below. The TS change allows the plant to remain in Mode 3 until the repairs are completed.

Plant applicability: BWR-4/6

LCO: The safety function of 11 SRVs must be operable (BWR-4 plants). The safety function of seven SRVs must be operable and the relief function of seven additional SRVs must be operable (BWR-6 plants).

Condition requiring entry into end state: If the LCO cannot be met with one or two SRVs inoperable, the inoperable valves must be returned to operability within 14 days. If the SRVs cannot be returned to operable status within that time, the plant must be placed in Mode 3 within 12 hours and in Mode 4 within 36 hours.

Proposed modification for end state required actions: If the LCO cannot be met with one or two SRVs inoperable, the inoperable valves must be returned to operability within 14 days. If the one or two inoperable SRVs cannot be returned to operable status within 14 days, the plant must be placed in Mode 3 within 12 hours. If three or more SRVs become inoperable, the plant must be placed in Mode 4 within 36 hours.

Assessment: The BWROG did a comparative PRA evaluation of the core damage risks of operation in the current end state and in the proposed Mode 3 end state. The evaluation indicates that the core damage risks are lower in Mode 3 than in Mode 4. Going to Mode 4 for one inoperable SRV would cause loss of the high-pressure steam-driven injection system (RCIC and HPCI), and loss of the power conversion system (condenser/feedwater), and require activating the RHR system. In addition, the EOPs direct the operator to take control of the depressurization function if low pressure injection/spray systems are needed for RPV water makeup and cooling. Based on the low probability of loss of the necessary overpressure protection function and the number of systems available in Mode 3, the staff concludes that the risks of staying in Mode 3 are approximately the same as and in some cases lower than the risks of going to the Mode 4 end state. The proposed change would allow the inoperable SRV to be repaired in a plant operating mode with lower risks. After repairs are made, the plant can be brought to full-power operation with less potential for transients and errors. The plant is taken into cold shutdown only when three or more SRVs are inoperable.

Finding: The requested change to allow operation in Mode 3 with a minimum number of SRVs inoperable is acceptable after a plant-specific evaluation. Since the time spent in Mode 3 to perform the repair is infrequent and limited, and in light of defense-in-depth considerations, the proposed change is acceptable.

2. TS 4.5.1.3 and LCO 3.5.1 (BWR-4); TS 4.5.2.3 and LCO 3.5.1 (BWR-6) - ECCS (Operating)

The ECCS provides cooling water to the core in the event of a LOCA. This set of ECCS TSs provide the operability requirements for the various ECCS subsystems as described below. This TS change would delete the secondary actions. The plant can remain in Mode 3 until the required repair actions are completed. The reactor is not depressurized.

Plant applicability: BWR-4/6

LCO: Each ECCS injection/spray subsystem and the ADS function of seven (BWR-4) and eight (BWR-6) SRVs must be operable.

Conditions requiring entry into end state: If the LCO cannot be met, the following actions must be taken for the listed conditions:

(a) If one low-pressure ECCS injection/spray subsystem is inoperable, the subsystem must be restored to operable status in 7 days.

(b) If the inoperable ECCS injection/core spray cannot be restored to operable status, the plant must be placed in Mode 3 within 12 hours and Mode 4 within 36 hours (BWR-4 plants only).

(c) If two ECCS injection subsystems are inoperable or one ECCS injection subsystem and one ECCS spray system are inoperable, one ECCS injection/spray subsystem must be restored to operable status within 72 hours. If this required action cannot be met, the

plant must be placed in Mode 3 within 12 hours and in Mode 4 within 36 hours (BWR-6 plants only).

(d) If the HPCI/HPCS system is inoperable, the RCIC system must be verified to be operable by administrative means within 1 hour and the HPCI/HPCS system restored to operable status within 14 days.

(e) If one ADS valve is inoperable, it must be restored to operable status within 14 days.

(f) If one ADS valve is inoperable and one low-pressure ECCS injection/spray subsystem is inoperable, the ADS valve must be restored to operable status within 72 hours or the low- pressure ECCS injection/spray subsystem must be restored to operable status within 72 hours.

(g) If two or more ADS valves become inoperable or the required actions described in items (e) and/or (f) cannot be met, the plant must be placed in Mode 3 within 12 hours and the reactor steam dome pressure reduced to less than 150 psig within 36 hours.

Proposed modification for end state required actions:

(a) No change.

(b) If the inoperable ECCS injection or spray system is inoperable, the plant must be restored to operable status within 12 hours. The plant is not taken into Mode 4 (cold shutdown).

(c) If two ECCS injection subsystems are inoperable or one ECCS injection subsystem and one ECCS spray system are inoperable, one ECCS injection/spray subsystem must be restored to operable status within 72 hours. If this required action cannot be met, the plant must be placed in Mode 3 within 12 hours. The plant is not taken into Mode 4 (BWR-6 plants only).

(d) No change.

(e) No change.

(f) No change.

(g) If two or more ADS valves become inoperable or the required actions described in items (e) and/or (f) cannot be met, the plant must be placed in Mode 3 within 12 hours. The reactor is not depressurized.

Assessment: The BWROG did a comparative PRA evaluation of the core damage risks of operation in the current end state and the proposed Mode 3 end state. The evaluation indicates that the core damage risks are lower in Mode 3 than in the current end state (Mode 4). Going to Mode 4 for one ECCS subsystem or one ADS valve would cause loss of the high-pressure

steam-driven injection system (RCIC and HPCI), and loss of the power conversion system (condenser/feedwater), and require activating the RHR system. In addition, the EOPs direct the operator to take control of the depressurization function if low pressure injection/spray systems are needed for RPV water makeup and cooling. Based on the low probability of loss of the reactor coolant inventory and the number of systems available in Mode 3, the staff concludes that the risks of staying in Mode 3 are approximately the same as and in some cases lower than the risks of going to the Mode 4 end state .

Finding: Since the time spent in Mode 3 to perform the repair is infrequent and limited, and in light of defense-in-depth considerations, the proposed change is acceptable.

3. TS 4.5.1.4 and LCO 3.5.3 (BWR-4 only) - RCIC System

The function of the RCIC system is to provide reactor coolant makeup during loss of feedwater and other transient events. This TS provides the operability requirements for the RCIC system as described below. The TS change allows the plant to remain in Mode 3 until the repairs are completed.

Plant applicability: BWR-4

LCO: The RCIC system must be operable during Modes 1, 2 and 3 when the reactor steam dome pressure is greater than 150 psig.

Condition requiring entry into end state: If the LCO cannot be met, the following actions must be taken: (a) verify by administrative means within 1 hour that the HPCI system is operable, and (b) restore the RCIC system to operable status within 14 days. If either or both actions cannot be completed within the allotted time, the plant must be placed in Mode 3 within 12 hours and the reactor steam dome pressure reduced to less than 150 psig within 36 hours.

Proposed modification for end state required actions: This TS change keeps the plant in Mode 3 (hot shutdown) until the required repairs are completed. The reactor steam dome pressure is not reduced to less than 150 psig.

Assessment: This change would allow the inoperable RCIC system to be repaired in a plant operating mode with lower risk and without challenging the normal shutdown systems. The BWROG did a comparative PRA evaluation of the core damage risks of operation in the current end state and in the proposed Mode 3 end state. The evaluation indicates that the core damage risks are lower in Mode 3 than in Mode 4. Going to Mode 4 for inoperability of RCIC would also cause loss of the high-pressure steam-driven injection system HPCI and loss of the power conversion system (condenser/feedwater), and would require activating the RHR system. The EOPs direct the operator to take control of the depressurization function if low pressure injection/spray systems are needed for RPV water makeup and cooling. Based on the low probability of loss of the necessary overpressure protection function and the number of systems available in Mode 3, the staff concludes that the risks of staying in Mode 3 are approximately the same as and in some cases lower than the risks of going to the Mode 4 end state.

Finding: Since the time spent in Mode 3 to perform the repair is infrequent and limited, and in light of defense-in-depth considerations, the proposed change is acceptable.

4. TS 4.5.1.6 and LCO 3.6.1.6 (BWR-4); TS 5.5.2.5 and LCO 3.6.1.6 (BWR-6) - Low-Low Set (LLS) Logic Valves

The function of LLS logic is to prevent excessive short-duration SRV cycling during an overpressure event. This TS provides operability requirements for the four LLS SRVs as described below. The TS change allows the plant to remain in Mode 3 until the repairs are completed.

Plant applicability: BWR-4/6

Conditions requiring entry into end state: If one LLS valve is inoperable, it must be returned to operability within 14 days. If the LLS valve cannot be returned to operable status within the allotted time, the plant must be placed in Mode 3 within 12 hours and in Mode 4 within 36 hours.

Proposed modification for end state required actions: The TS change would keep the plant in Mode 3 until the required repair actions are completed. The plant would not be taken into Mode 4 (cold shutdown).

Assessment: The BWROG did a comparative PRA evaluation of the core damage risks of operation in the current end state and the proposed Mode 3 end state. The evaluation indicates that the core damage risks are lower in Mode 3 than in Mode 4, the current end state. Going to Mode 4 for one LLS inoperable SRV would cause loss of the high-pressure steam-driven injection system (RCIC and HPCI), and loss of the power conversion system (condenser/feedwater), and would require activating the RHR system. With one LLS valve inoperable, the remaining valves are adequate to perform the required function. The EOPs direct the operator to take control of the depressurization function if low pressure injection/spray systems are needed for RPV water makeup and cooling. Based on the low probability of loss of the necessary overpressure protection function during the infrequent and limited time in Mode 3 and the number of systems available in Mode 3, the staff concludes that the risks of staying in Mode 3 are approximately the same as and in some cases lower than the risks of going to the Mode 4 end state. The proposed change allows repairs of the inoperable SRV to be performed in a plant operating mode with lower risks.

Finding: Since the time spent in Mode 3 to perform the repair is infrequent and limited, and in light of defense-in-depth considerations, the proposed change is acceptable.

5. TS 4.5.1.1, TS 4.5.2.1 and LCO 3.3.8.2 - Reactor Protection System (RPS) Electric Power Monitoring

RPS electric power monitoring system is provided to isolate the RPS bus from the motor generator (MG) set or an alternate power supply in the event of overvoltage, undervoltage, or underfrequency. This system protects the load connected to the RPS bus against

unacceptable voltage and frequency conditions and forms an important part of the primary success path of the essential safety circuits. Some of the essential equipment powered from the RPS buses includes the RPS logic, scram solenoids, and various valve isolation logic. The TS change allows the plant to remain in Mode 3 until the repairs are completed.

Plant applicability: BWR-4/6

LCO: For Modes 1, 2, 3 and Modes 4 and 5 (with any control rod withdrawn from a core cell containing one or more fuel assemblies) two RPS electric power monitoring assemblies shall be operable for each in-service RPS motor generator set or alternate power supply.

Condition requiring entry into end state: If the LCO cannot be met, the associated in-service power supply(s) must be removed from service within 72 hours for one electric power assembly (EPM) inoperable or one hour for both EPM assemblies inoperable. If the in-service power supply cannot be removed from service within the allotted time, the plant must be placed in Mode 3 within 12 hours and Mode 4 within 36 hours.

Proposed modification for end state required actions: The proposed change is to keep the plant in Mode 3 until the repair actions are completed. Delete required action in C.2 which required the plant to be in Mode 4.

Assessment: To reach Mode 3 in accordance with the TS, there must be a functioning power supply with degraded protective circuitry in operation. However, the overvoltage, undervoltage, or underfrequency condition must exist for an extended time period to cause damage. This is a low probability of this occurring in the short period of time that the plant remains in Mode 3 without this protection.

The specific failure condition of interest is not risk significant for BWR PRAs. If the required restoration actions cannot be completed within the specified time, going into Mode 4 would cause loss of the high-pressure steam-driven injection system (RCIC and HPCI), and loss of the power conversion system (condenser/feedwater), and require activating the RHR system. In addition, the EOPs direct the operator to take control of the depressurization function if low pressure injection/spray systems are needed for RPV water makeup and cooling. Based on the low probability of loss of the RPS power monitoring system during the infrequent and limited time in Mode 3 and the number of systems available in Mode 3, the staff concludes that the risks of staying in Mode 3 are approximately the same as and in some cases lower than the risks of going to the Mode 4 end state.

Finding : Since the time spent in Mode 3 to perform the repair is infrequent and limited, and in light of defense-in-depth considerations, the proposed change is acceptable.

6. TS 4.5.1.19 and LCO 3.8.1 (BWR-4); TS 4.5.2.17 and LCO 3.8.1 (BWR-6) - AC Sources (Operating)

The purpose of the AC electrical system is to provide the power required during all situations to put the plant in a safe condition and prevent the release of radioactive material to the environment.

The Class 1E electrical power distribution system AC sources consist of the offsite power source (preferred power sources, normal and alternate(s)), and the onsite standby power sources (emergency diesel generators). In addition, many sites provide a crosstie capability between units.

As required by General Design Criterion (GDC) 17 of 10 CFR Part 50, Appendix A, the design of the AC electrical system provides independence and redundancy. The onsite Class 1E AC distribution system is divided into redundant divisions so that the loss of any one division does not prevent the minimum safety functions from being performed. Each division has connections to two preferred offsite power sources and a single diesel generator.

Offsite power is supplied to the unit switchyard(s) from the transmission network by two transmission lines. From the switchyard(s), two electrically and physically separated circuits provide AC power through a step down transformer(s) to the 4.16 KV emergency buses.

In the event of a loss of off-site power, the emergency electrical loads are automatically connected to the EDGs in sufficient time to provide for a safe reactor shutdown and to mitigate the consequences of a design basis accident (DBA) such as a LOCA.

Plant applicability: BWR-4/6

LCO: The following AC electrical power sources shall be operable in Modes 1, 2, and 3:

(a) Two qualified circuits between the offsite transmission network and the onsite Class 1E AC electric power distribution system,

(b) Three diesel generators, and

(c) Automatic Sequencers.

Condition requiring entry into end state: Plant operators must bring the plant to Mode 4 within 36 hours following the sustained inoperability of one required automatic load sequencer either or both required offsite circuits, either one, two or three or required diesel generators, or one required offsite circuit and one, two or three required diesel generators.

Proposed modification for end state required actions: Delete required action G.2 to go to Mode 4 (cold shutdown). The plant will remain in Mode 3 (hot shutdown).

Assessment: Entry into any of the conditions for the AC power sources implies that the AC power sources have been degraded and the single failure protection for the safe shutdown equipment may be ineffective. Consequently, as specified by TS 3.8.1, at present the plant operators must bring the plant to Mode 4 when the required action is not completed by the specified time for the associated action.

The BWROG did a comparative PRA evaluation of the core damage risks of operation in the current end state and in the proposed Mode 3 end state. Events initiated by the loss of offsite

power are dominant contributors to core damage frequency in most BWR PRAs, and the steam driven core cooling systems IC, RCIC and HPCI play a major role in mitigating these events. The evaluation indicates that the core damage risks are lower in Mode 3 than in Mode 4 for one inoperable AC power source. Going to Mode 4 for one inoperable AC power source would cause loss of the high-pressure steam-driven injection system (RCIC and HPCI), and loss of the power conversion system (condenser/feedwater), and require activating the RHR system. In addition, the EOPs direct the operator to take control of the depressurization function if low pressure injection/spray systems are needed for RPV water makeup and cooling. Based on the low probability of loss of the AC power and the number of systems available in Mode 3, the staff concludes that the risks of staying in Mode 3 are lower than going to the Mode 4 end state.

Finding: Since the time spent in Mode 3 to perform the repair is infrequent and limited, and in light of defense-in-depth considerations, the proposed change is acceptable.

7. 4.5.1.20 TS LCO 3.8.4 (BWR-4), 4.5.2.18 TS LCO 3.8.4 - DC Sources (Operating)

The purpose of the DC power system is to provide a reliable source of DC power for both normal and abnormal conditions. It must supply power in an emergency for an adequate length of time until normal supplies can be restored.

The DC electrical system:

(a) Provides AC emergency power system with control power,

(b) Provides motive and control power to selected safety related equipment, and

(c) Provides power to preferred AC vital buses (via inverters).

Plant applicability: BWR 4/6

LCO. For Modes 1, 2 and 3, the following DC sources are required to be operable:

BWR-4: The (Division 1 and Division 2 station service, and DG 1B, 2A, and 2C) DC electrical power systems shall be operable.

BWR-6: The (Divisions 1, 2, and 3) DC electrical power subsystems shall be operable.

Condition requiring entry into end state: The plant operators must bring the plant to Mode 3 within 12 hours and Mode 4 within 36 hours following the sustained inoperability of one DC electrical power subsystem for a period of 2 hours.

Proposed modification for end state required actions: The proposed TS change is to remove the requirement to place the plant in Mode 4. The required action in D.2 (BWR-4) and E.2 (BWR-6) are deleted.

Assessment: If one of the DC electrical power subsystems is inoperable, the remaining DC electrical power subsystems have the capacity to support a safe shutdown and to mitigate an

accident condition. The BWROG did a comparative PRA evaluation of the core damage risks of operation in the current end state and in the proposed Mode 3 end state. Events initiated by the loss of offsite power are dominant contributors to core damage frequency in most BWR PRAs, and the steam driven core cooling systems IC, RCIC and HPCI play a major role in mitigating these events. The evaluation indicates that the core damage risks are lower in Mode 3 than in Mode 4. Going to Mode 4 for one inoperable DC power source would cause loss of the high-pressure steam-driven injection system (RCIC and HPCI), and loss of the power conversion system (condenser/feedwater), and require activating the RHR system. In addition, the EOPs direct the operator to take control of the depressurization function if low pressure injection/spray systems are needed for RPV water makeup and cooling. Based on the low probability of loss of the DC power and the number of systems available in Mode 3, the staff concludes that the risks of staying in Mode 3 are approximately the same as and in some cases lower than the risks of going to the Mode 4 end state.

Finding Since the time spent in Mode 3 to perform the repair is infrequent and limited, and in light of defense-in-depth considerations, the proposed change is acceptable.

8. TS 4.5.1.21 and LCO 3.8.7 (BWR-4); TS 4.5.2.19 and 3.8.7 (BWR-6) - Inverters (Operating)

In Modes 1, 2, and 3, the inverters provide the preferred source of power for the 120 V AC vital buses which power the RPS and the ECCS initiation. The inverter can be powered from an internal AC source/rectifier or from the station battery.

Plant applicability: BWR-4/6

LCO: For Modes 1, 2, and 3 the following inverters shall be operable:

BWR-4: The Division 1 and Division 2 shall be operable.

BWR-6: The Divisions 1, 2, and 3 shall be operable.

Condition requiring entry into end state: The plant operators must bring the plant to Mode 3 within 12 hours and Mode 4 within 36 hours following the sustained inoperability of the required inverter for a period of 24 hours.

Proposed modification for end state required actions: The proposed TS change is to remove the requirement to place the plant in Mode 4. The Required action in B.2 (BWR-4) and C.2 (BWR-6) are deleted.

Assessment: If one of the inverters is inoperable, the remaining inverters have the capacity to support a safe shutdown and to mitigate an accident condition. The BWROG did a comparative PRA evaluation of the core damage risks of operation in the current end state and in the proposed Mode 3 end state. Events initiated by the loss of offsite power are dominant contributors to core damage frequency in most BWR PRAs, and the steam driven core cooling systems IC, RCIC and HPCI play a major role in mitigating these events. The evaluation

indicates that the core damage risks are lower in Mode 3 than in Mode 4. Going to Mode 4 for one inoperable inverter power source would cause loss of the high-pressure steam-driven injection system (RCIC and HPCI), and loss of the power conversion system (condenser/feedwater), and require activating the RHR system. In addition, the EOPs direct the operator to take control of the depressurization function if low pressure injection/spray systems are needed for RPV water makeup and cooling. Based on the low probability of loss of the inverters during the infrequent and limited time in Mode 3 and the number of systems available in Mode 3, the staff concludes that the risks of staying in Mode 3 are approximately the same as and in some cases lower than the risks of going to the Mode 4 end state .

Finding: Since the time spent in Mode 3 to perform the repair is infrequent and limited, and in light of defense-in-depth considerations, the proposed change is acceptable.

9. TS 4.5.1.22 and LCO 3.8.9 (BWR-4); TS 4.5.2.20 and LCO 3.8.9 (BWR-6) - Distribution Systems (Operating)

The onsite Class 1E AC and DC electrical power distribution system is divided into redundant and independent AC, DC, and AC vital bus electrical power distribution systems. The primary AC electrical power distribution subsystem for each division consists of a 4.16 KV engineered safety feature (ESF) bus having an offsite source of power as well as a dedicated onsite diesel generator (DG) source.

The secondary plant distribution subsystems include 600 VAC emergency buses and associated load centers, motor control centers, distribution panels and transformers.

The 120 VAC vital buses are arranged in four load groups and are normally powered from the DC electrical power system.

There are two independent 125/250 VDC station service electrical power distribution systems and three independent 125 VDC DG electrical power distribution subsystems that support the necessary power for ESF functions. Each subsystem consists of a 125V and 250 V bus and associated distribution panels.

Plant applicability: BWR-4/6

LCO: For Modes 1, 2, and 3 the following electrical power distribution subsystems shall be operable:

BWR-4: The (Division 1 and Division 2) AC, DC, and AC vital buses shall be operable.

BWR-6: The (Divisions 1, 2, and 3) AC, DC, and AC vital buses shall be operable.

Condition requiring entry into end state: The plant operators must bring the plant to Mode 3 within 12 hours and Mode 4 within 36 hours following the sustained inoperability of one AC or one DC or one AC vital bus electrical power subsystem for a period of 8 hours, 2 hours and 2 hours respectively (16 hours from the discovery of the failure to meet the LCO).

Proposed modification for end state required actions: The proposed TS change is to remove the requirement to place the plant in Mode 4. The required action in D.2 (BWR-4) and D.2 (BWR-6) are deleted.

Assessment: If one of the AC/DC/AC vital subsystems is inoperable, the remaining AC/DC/AC vital subsystems have the capacity to support a safe shutdown and to mitigate an accident condition. The BWROG did a comparative PRA evaluation of the core damage risks of operation in the current end state and in the proposed Mode 3 end state. Events initiated by the loss of offsite power are dominant contributors to core damage frequency in most BWR PRAs, and the steam driven core cooling systems IC, RCIC and HPCI play a major role in mitigating these events. The evaluation indicates that the core damage risks are lower in Mode 3 than in Mode 4. Going to Mode 4 for one inoperable AC/DC vital power source would cause loss of the high-pressure steam-driven injection system (RCIC and HPCI), and loss of the power conversion system (condenser/feedwater), and require activating the RHR system. In addition, the EOPs direct the operator to take control of the depressurization function if low pressure injection/spray systems are needed for RPV water makeup and cooling. Based on the low probability of loss of the AC/DC/AC vital electrical subsystems during the infrequent and limited time in Mode 3 and the number of systems available in Mode 3, the staff concludes that the risks of staying in Mode 3 are approximately the same as and in some cases lower than the risks of going to the Mode 4 end state .

Finding: Since the time spent in Mode 3 to perform the repair is infrequent and limited, and in light of defense-in-depth considerations, the proposed change is acceptable.

10. TS 4.5.1.5 and LCO 3.6.1.1 - Primary Containment

The function of the primary containment is to isolate and contain fission products released from the reactor primary system following a design basis LOCA and to confine the postulated release of radioactive material. The primary containment consists of a steel lined, reinforced concrete vessel, which surrounds the reactor primary system and provides an essentially leak tight barrier against an uncontrolled release of radioactive material to the environment. Additionally, this structure provides shielding from the fission products that may be present in the primary containment atmosphere following accident conditions.

Plant Applicability: BWR-4/6

LCO: The primary containment shall be operable.

Condition requiring entry into end state: If the LCO cannot be met, the primary containment must be returned to operability within one hour (Required Action A.1). If the primary containment cannot be returned to operable status within the allotted time, the plant must be placed in Mode 3 within 12 hours (Required Action B.1) and in Mode 4 within 36 hours (Required Action B.2).

Proposed modification for end state required actions: Delete Required Action B.2.

Assessment: The primary containment is one of the three primary boundaries preventing the release of radioactive material. (The other two are the fuel cladding and the RCS pressure boundary.) Compliance with this LCO ensures that a primary containment configuration exists, including equipment hatches and penetrations, that is structurally sound and will limit leakage to those leakage rates assumed in the safety analyses. This LCO entry condition does not include leakage through an unisolated release path or containment rupture. The BWROG has determined that previous generic PRA work related to 10 CFR Part 50, Appendix J requirements has shown that containment leakage is not risk significant. Should a fission product release from the primary containment occur, the secondary containment and related functions would remain operable to contain the release, and the standby gas treatment system would remain available to filter fission products from being released to the environment. By remaining in Mode 3, HPCI, RCIC, and the power conversion system (condensate/feedwater) remain available for water makeup and decay heat removal. Additionally, the EOPs direct the operators to take control of the depressurization function if low pressure injection/spray are needed for RCS makeup and cooling. Therefore, defense-in-depth is maintained with respect to water makeup and decay heat removal by remaining in Mode 3.

Finding: The requested change is acceptable. Note that the staff's approval relies upon the secondary containment and the standby gas treatment system for maintaining defense-in-depth while in this reduced end state.

11. TS 4.5.1.7 and LCO 3.6.1.7 - Reactor Building-to-Suppression Chamber Vacuum Breakers (BWR-4 only)

The reactor building-to-suppression chamber vacuum breakers relieve vacuum when the primary containment depressurizes below the pressure of the reactor building, thereby serving to preserve the integrity of the primary containment.

Plant applicability: BWR-4

LCO: Each reactor building-to-suppression chamber vacuum breaker shall be operable.

Condition requiring entry into end state: If one line has one or more reactor building-to-suppression chamber vacuum breakers inoperable for opening, the breaker(s) must be returned to operability within 72 hours (Required Action C.1). If the vacuum breaker(s) cannot be returned to operability within the allotted time, the plant must be placed in Mode 3 within 12 hours (Required Action E.1) and in Mode 4 within 36 hours (Required Action E.2).

Proposed modification for end state required actions: Modify Condition E to relate only to Condition C and delete Required Action E.2. Add Condition F, with Required Actions F.1 and F.2, to address the required actions related to Conditions A, B, and D.

Assessment: The BWROG has determined that the specific failure condition of interest is not risk significant in BWR PRAs. The reduced end state would only be applicable to the situation where the vacuum breaker(s) in one line are inoperable for opening, with the remaining operable vacuum breakers capable of providing the necessary vacuum relief function. By

remaining in Mode 3, HPCI, RCIC, and the power conversion system (condensate/feedwater) remain available for water makeup and decay heat removal. Additionally, the EOPs direct the operators to take control of the depressurization function if low pressure injection/spray are needed for RCS makeup and cooling. Therefore, defense-in-depth is maintained with respect to water makeup and decay heat removal by remaining in Mode 3. The existing end state remains unchanged for conditions involving more than one line or vacuum breakers that are stuck in the open position, as established by new Condition F.

Finding: Since the time spent in Mode 3 to perform the repair is infrequent and limited, and in light of defense-in-depth considerations, the proposed change is acceptable.

12. TS 4.5.1.8 and LCO 3.6.1.8 - Suppression Chamber-to-Drywell Vacuum Breakers (BWR-4 only)

The function of the suppression chamber-to-drywell vacuum breakers is to relieve vacuum in the drywell, thereby preventing an excessive negative differential pressure across the wetwell/drywell boundary.

Plant applicability: BWR-4

LCO: Nine suppression chamber-to-drywell vacuum breakers shall be operable for opening.

Condition requiring entry into end state: If one suppression chamber-to-drywell vacuum breaker is inoperable for opening, the breaker must be returned to operability within 72 hours (Required Action A.1). If the vacuum breaker cannot be returned to operability within the allotted time, the plant must be placed in Mode 3 within 12 hours (Required Action C.1) and in Mode 4 within 36 hours (Required Action C.2).

Proposed modification for end state required actions: Modify Condition C to relate only to Condition A, and delete Required Action C.2. Add Condition D with Required Actions D.1 and D.2 to maintain the existing requirements for Condition B.

Assessment: The BWROG has determined that the specific failure of interest is not risk significant in BWR PRAs. The reduced end state would only be applicable to the situation where one suppression chamber-to-drywell vacuum breaker is inoperable for opening, with the remaining operable vacuum breakers capable of providing the necessary vacuum relief function. By remaining in Mode 3, HPCI, RCIC, and the power conversion system (condensate/feedwater) remain available for water makeup and decay heat removal. Additionally, the EOPs direct the operators to take control of the depressurization function if low pressure injection/spray are needed for RCS makeup and cooling. Therefore, defense-in-depth is maintained with respect to water makeup and decay heat removal by remaining in Mode 3. The existing end state remains unchanged for conditions involving any suppression chamber-to-drywell vacuum breakers that are stuck open, as established by new Condition D.

Finding: Since the time spent in Mode 3 to perform the repair is infrequent and limited, and in light of defense-in-depth considerations, the proposed change is acceptable.

13. TS 4.5.1.9, TS 4.5.2.8, and LCO 3.6.1.9 - Main Steam Isolation Valve (MSIV) Leakage Control System (LCS)

The MSIV LCS supplements the isolation function of the MSIVs by processing the fission products that could leak through the closed MSIVs after core damage, assuming leakage rate limits which are based on a large LOCA.

Plant applicability: BWR-4/6

LCO: Two MSIV LCS subsystems shall be operable.

Condition requiring entry into end state: If one MSIV LCS subsystem is inoperable, it must be restored to operable status within 30 days (Required Action A.1). If both MSIV LCS subsystems are inoperable, one of the MSIV LCS subsystems must be restored to operable status within seven days (Required Action B.1). If the MSIV LCS subsystems cannot be restored to operable status within the allotted time, the plant must be placed in Mode 3 within 12 hours (Required Action C.1) and in Mode 4 within 36 hours (Required Action C.2).

Proposed modification for end state required actions: Delete Required Action C.2.

Assessment: The BWROG has determined that this system is not significant in BWR PRAs and, based on a BWROG program, many plants have eliminated the system altogether. The unavailability of one or both MSIV LCS subsystems has no impact on CDF or LERF, independently of the mode of operation at the time of the accident. Furthermore, the challenge frequency of the MSIV LCS system (i.e., the frequency with which the system is expected to be challenged to mitigate offsite radiation releases resulting from MSIV leaks above TS limits) is less than 1.0E-6/yr. Consequently, the conditional probability that this system will be challenged during the repair time interval while the plant is at either the current or the proposed end state (i.e., Mode 4 or Mode 3, respectively) is less than 1.0E-8. This probability is considerably smaller than probabilities considered "negligible" in RG 1.177 for much higher consequence risks, such as a large early release.

Section 5.1 summarizes the staff's risk argument for approval of TSs 4.5.1.9, 4.5.2.8, and LCO 3.6.1.9, "Main Steam Isolation Valve (MSIV) Leakage Control System (LCS)." The argument for staying in Mode 3 instead of going to Mode 4 to repair the MSIV LCS system (one or both trains) is also supported by defense-in-depth considerations. Section 5.2 makes a comparison between the current (Mode 3) and the proposed (Mode 4) end state, with respect to the means available to perform critical functions (i.e., functions contributing to the defense-in-depth philosophy) whose success is needed to prevent core damage and containment failure and mitigate radiation releases. The risk and defense-in-depth arguments, used according to the "integrated decision-making" process of RGs 1.174 and 1.177, support the conclusion that Mode 3 is as safe as Mode 4 (if not safer) for repairing an inoperable MSIV LCS system.

Finding: Since the time spent in Mode 3 to perform the repair is infrequent and limited, and in light of defense-in-depth considerations, the proposed change is acceptable.

14. TS 4.5.1.11 and LCO 3.6.2.4 - Residual Heat Removal (RHR) Suppression Pool Spray (BWR-4 only)

Following a DBA, the RHR suppression pool spray system removes heat from the suppression chamber airspace. A minimum of one RHR suppression pool spray subsystem is required to mitigate potential bypass leakage paths from the drywell and maintain the primary containment peak pressure below the design limits.

Plant applicability: BWR-4

LCO: Two RHR suppression pool spray subsystems shall be operable.

Condition requiring entry into end state: If one RHR suppression pool spray subsystem is inoperable, it must be restored to operable status within seven days (Required Action A.1). If both RHR suppression pool spray subsystems are inoperable, one of them must be restored to operable status within eight hours (Required Action B.1). If the RHR suppression pool spray subsystem cannot be restored to operable status within the allotted time, the plant must be placed in Mode 3 within 12 hours (Required Action C.1) and in Mode 4 within 36 hours (Required Action C.2).

Proposed modification for end state required actions: Delete Required Action C.2.

Assessment. The main function of the RHR suppression spray system is to remove heat from the suppression chamber so that the pressure and temperature inside primary containment remain within analyzed design limits. The RHR suppression spray system was designed to mitigate potential effects of a postulated DBA, that is a large LOCA which is assumed to occur concurrently with the most limiting single failure and conservative inputs, such as for initial suppression pool water volume and temperature. Under the conditions assumed in the DBA, steam blown down from the break could bypass the suppression pool and end up in the suppression chamber air space and the RHR suppression spray system could be needed to condense such steam so that the pressure and temperature inside primary containment remain within analyzed design basis limits. However, the frequency of a DBA is very small and the containment has considerable margin to failure above the design limits. For this reason, the unavailability of one or both RHR suppression spray subsystems has no significant impact on CDF or LERF, even for accidents initiated during operation at power. Therefore, it is very unlikely that the RHR suppression spray system will be challenged to mitigate an accident occurring during power operation. This probability becomes extremely unlikely for accidents that would occur during a small fraction of the year (less than three days) during which the plant would be in Mode 3 (associated with lower initial energy level and reduced decay heat load as compared to power operation) to repair the failed RHR suppression spray system.

Section 5.1 summarizes the staff's risk argument for approval of TS 4.5.1.11 and LCO 3.6.2.4, "Residual Heat Removal (RHR) Suppression Pool Spray." The argument for staying in Mode 3 instead of going to Mode 4 to repair the RHR suppression pool spray system (one or both trains) is also supported by defense-in-depth considerations. Section 5.2 makes a comparison between the current (Mode 4) and the proposed (Mode 3) end state, with respect to the means

available to perform critical functions (i.e., functions contributing to the defense-in-depth philosophy) whose success is needed to prevent core damage and containment failure and mitigate radiation releases.

In addition, the probability of a DBA (large break) is much smaller during shutdown as compared to power operation. A DBA in Mode 3 would be considerably less severe than a DBA occurring during power operation since Mode 3 is associated with lower initial energy level and reduced decay heat load. Under these extremely unlikely conditions, an alternate method that can be used to remove heat from the primary containment (in order to keep the pressure and temperature within the analyzed design basis limits) is containment venting. For more realistic accidents that could occur in Mode 3, several alternate means are available to remove heat from the primary containment, such as the RHR system in the suppression pool cooling mode and the containment spray mode.

The risk and defense-in-depth arguments, used according to the "integrated decision-making" process of RGs 1.174 and 1.177, support the conclusion that Mode 3 is as safe as Mode 4 (if not safer) for repairing an inoperable RHR suppression spray system.

Finding: Since the time spent in Mode 3 to perform the repair is infrequent and limited, and in light of defense-in-depth considerations, the proposed change is acceptable.

15 TS 4.5.1.12, TS 4.5.2.10, and LCO 3.6.4.1 - Secondary Containment

Following a DBA, the function of the secondary containment is to contain, dilute, and holdup fission products that may leak from primary containment. Its leak tightness is required to ensure that the release of radioactive materials from the primary containment is restricted to those leakage paths and associated leakage rates assumed in the accident analysis and that fission products entrapped within the secondary containment structure will be treated by the standby gas treatment system prior to discharge to the environment.

Plant applicability: BWR-4/6

LCO: The secondary containment shall be operable.

Condition requiring entry into end state: If the secondary containment is inoperable, it must be restored to operable status within four hours (Required Action A.1). If it cannot be restored to operable status within the allotted time, the plant must be placed in Mode 3 within 12 hours (Required Action B.1), and in Mode 4 within 36 hours (Required Action B.2).

Proposed modification for end state required actions: Delete Required Action B.2.

Assessment: This LCO entry condition does not include gross leakage through an unisolable release path or secondary containment rupture. The BWROG has determined that previous generic PRA work related to 10 CFR Part 50, Appendix J requirements has shown that containment leakage is not risk significant. The primary containment, and all other primary and secondary containment-related functions would still be operable, including the standby gas treatment system, thereby minimizing the likelihood of an unacceptable release. By remaining

in Mode 3, HPCI, RCIC, and the power conversion system (condensate/feedwater) remain available for water makeup and decay heat removal. Additionally, the EOPs direct the operators to take control of the depressurization function if low pressure injection/spray are needed for RCS makeup and cooling. Therefore, defense-in-depth is improved with respect to water makeup and decay heat removal by remaining in Mode 3.

Finding: The requested change is acceptable. Note that the staff's approval relies upon the primary containment, and all other primary and secondary containment-related functions to still be operable, including the standby gas treatment system, for maintaining defense-in-depth while in this reduced end state.

16 TS 4.5.1.13, TS 4.5.2.11, and LCO 3.6.4.3 - Standby Gas Treatment (SGT) System

The function of the SGT system is to ensure that radioactive materials that leak from the primary containment into the secondary containment following a DBA are filtered and adsorbed prior to exhausting to the environment.

Plant applicability: BWR-4/6

LCO: Two SGT subsystems shall be operable.

Condition requiring entry into end state: If one SGT subsystem is inoperable, it must be restored to operable status within seven days (Required Action A.1). If the SGT subsystem cannot be restored to operable status within the allotted time, the plant must be placed in Mode 3 within 12 hours (Required Action B.1) and in Mode 4 within 36 hours (Required Action B 2). In addition, if two SGT subsystems are inoperable in Modes 1, 2, or 3, LCO 3.0.3 must be entered immediately (Required Action D.1).

Proposed modification for end state required actions: Delete Required Action B.2. Change Required Action D.1 to "Be in Mode 3" with a Completion Time of "12 hours."

Assessment: The unavailability of one or both SGT subsystems has no impact on CDF or LERF, independent of the mode of operation at the time of the accident. Furthermore, the challenge frequency of the SGT system (i.e., the frequency with which the system is expected to be challenged to mitigate offsite radiation releases resulting from materials that leak from the primary to the secondary containment above TS limits) is less than 1.0E-6/yr. Consequently, the conditional probability that this system will be challenged during the repair time interval while the plant is at either the current or the proposed end state (i e., Mode 4 or Mode 3, respectively) is less than 1.0E-8. This probability is considerably smaller than the probabilities considered "negligible" in RG 1.177 for much higher consequence risks, such as large early release.

Section 5.1 summarizes the staff's risk argument for approval of TSs 4.5.1.13, 4.5.2.11, and LCO 3.6.4.3, "Standby Gas Treatment (SGT) System." The argument for staying in Mode 3 instead of going to Mode 4 to repair the SGT system (one or both trains) is also supported by defense-in-depth considerations. Section 5.2 makes a comparison between the current (Mode 4) and the proposed (Mode 3) end state, with respect to the means available to perform critical

functions (i.e., functions contributing to the defense-in-depth philosophy) whose success is needed to prevent core damage and containment failure and mitigate radiation releases. The risk and defense-in-depth arguments, used according to the "integrated decision-making" process of RGs 1.174 and 1.177, support the conclusion that Mode 3 is as safe as Mode 4 (if not safer) for repairing an inoperable SGT system.

Finding: Since the time spent in Mode 3 to perform the repair is infrequent and limited, and in light of defense-in-depth considerations, the proposed change is acceptable.

17. TS 4 5.1.14 and LCO 3.7.1 - Residual Heat Removal Service Water (RHRSW) System (BWR-4 only)

The RHRSW system is designed to provide cooling water for the RHR system heat exchangers, which are required for safe shutdown following a normal shutdown or DBA or transient.

Plant applicability: BWR-4

LCO: Two RHRSW subsystems shall be operable.

Condition requiring entry into end state: If the LCO cannot be met, the following actions must be taken for the listed conditions:

(a) If one RHRSW pump is inoperable, it must be restored to operable status within 30 days (Required Action A.1).

(b) If one RHRSW pump in each subsystem is inoperable, one RHRSW pump must be restored to operable status within seven days (Required Action B.1).

(c) If one RHRSW subsystem is inoperable for reasons other than Condition A, the RHRSW subsystem must be restored to operable status within seven days (Required Action C.1).

(d) If the required action and associated completion time cannot be met within the allotted time, the plant must be placed in Mode 3 within 12 hours (Required Action E.1) and in Mode 4 within 36 hours (Required Action E.2).

Proposed modification for end state required actions: Renumber Conditions D (and Required Action D.1) and E (and Required Actions E.1 and E.2) to Conditions E (and Required Action E.1) and F (and Required Actions F.1 and F.2), respectively. Modify new Condition F to address new Condition E, which maintains the existing requirements with respect to both RHR subsystems being inoperable for reasons other than Condition B. Add a new Condition D, which establishes requirements for existing Conditions A, B, and C, that are similar to existing Condition E but without Required Action E.2.

Assessment: The BWROG performed a comparative PRA evaluation of the core damage risks when operating in the current end state versus the proposed Mode 3 end state. The results indicated that the core damage risks while operating in Mode 3 (assuming the individual failure conditions) are lower or comparable to the current end state. By remaining in Mode 3, HPCI, RCIC, and the power conversion system (condensate/feedwater) remain available for water makeup and decay heat removal. Additionally, the EOPs direct the operators to take control of the depressurization function if low pressure injection/spray are needed for RCS makeup and cooling. Therefore, defense-in-depth is improved with respect to water makeup and decay heat removal by remaining in Mode 3, and the required safety function can still be performed with the RHRSW subsystem components that are still operable.

Finding: Since the time spent in Mode 3 to perform the repair is infrequent and limited, and in light of defense-in-depth considerations, the proposed change is acceptable.

18. TS 4.5.1.15 and LCO 3.7.2 - Plant Service Water (PSW) System and Ultimate Heat Sink (UHS) (BWR-4 only)

The PSW system (in conjunction with the UHS) is designed to provide cooling water for the removal of heat from certain safe shutdown-related equipment heat exchangers following a DBA or transient.

Plant applicability: BWR-4

LCO: Two PSW subsystems and the UHS shall be operable.

Condition requiring entry into end state: If the LCO cannot be met, the following actions must be taken for the listed conditions:

(a) If one PSW pump is inoperable, it must be restored to operable status within 30 days (Required Action A.1).

(b) If one PSW pump in each subsystem is inoperable, one PSW pump must be restored to operable status within seven days (Required Action B.1).

(c) If the required action and associated completion time cannot be met within the allotted time, the plant must be placed in Mode 3 within 12 hours (Required Action E.1) and in Mode 4 within 36 hours (Required Action E.2).

Proposed modification for end state required actions: Delete Required Action E.2 and add Condition F with Required Actions F.1 and F.2 to maintain the other requirements unchanged that are referred to in existing Condition E.

Assessment: The BWROG performed a comparative PRA evaluation of the core damage risks associated with operating in the current end state versus the proposed Mode 3 end state. The results indicated that the core damage risks while operating in Mode 3 (assuming the individual failure conditions) are lower or comparable to the current end state. With one pump inoperable

in one or more subsystems, the remaining pumps are adequate to perform the PSW heat removal function. By remaining in Mode 3, HPCI, RCIC, and the power conversion system (condensate/feedwater) remain available for water makeup and decay heat removal. Additionally, the EOPs direct the operators to take control of the depressurization function if low pressure injection/spray are needed for RCS makeup and cooling. Therefore, defense-in-depth is improved with respect to water makeup and decay heat removal by remaining in Mode 3.

Finding: Since the time spent in Mode 3 to perform the repair is infrequent and limited, and in light of defense-in-depth considerations, the proposed change is acceptable.

19. TS 4.5.1.16 and LCO 3.7.4 - Main Control Room Environmental Control (MCREC) System (BWR-4 only)

The MCREC system provides a radiologically controlled environment from which the plant can be safely operated following a DBA.

Plant applicability: BWR-4

LCO. Two MCREC subsystems shall be operable.

Condition requiring entry into end state: If one MCREC subsystem is inoperable, it must be restored to operable status within seven days (Required Action A.1). If the MCREC subsystem cannot be restored to operable status within the allotted time, the plant must be placed in Mode 3 within 12 hours (Required Action B.1) and in Mode 4 within 36 hours (Required Action B.2). If two MCREC subsystems are inoperable in Modes 1, 2, or 3, LCO 3.0.3 must be entered immediately (Required Action D.1).

Proposed modification for end state required actions: Delete Required Action B 2, and change Required Action D.1 to "Be in Mode 3" with a Completion Time of "12 hours."

Assessment: The unavailability of one or both MCREC subsystems has no significant impact on CDF or LERF, independently of the mode of operation at the time of the accident. Furthermore, the challenge frequency of the MCREC system (i.e., the frequency with which the system is expected to be challenged to provide a radiologically controlled environment in the main control room following a DBA which leads to core damage and leaks of radiation from the containment that can reach the control room) is less than 1.0E-6/yr. Consequently, the conditional probability that this system will be challenged during the repair time interval while the plant is at either the current or the proposed end state (i.e., Mode 4 or Mode 3, respectively) is less than 1.0E-8. This probability is considerably smaller than the probabilities considered "negligible" in RG 1.177 for much higher consequence risks, such as a large early release.

Section 5.1 summarizes the staff's risk argument for approval of TS 4.5.1.16 and LCO 3.7.4, "Main Control Room Environmental Control (MCREC) System." The argument for staying in Mode 3 instead of going to Mode 4 to repair the MCREC system (one or both trains) is also supported by defense-in-depth considerations. Section 5.2 makes a comparison between the current (Mode 3) and the proposed (Mode 4) end state, with respect to the means available to

perform critical functions (i.e., functions contributing to the defense-in-depth philosophy) whose success is needed to prevent core damage and containment failure and mitigate radiation releases. The risk and defense-in-depth arguments, used according to the "integrated decision-making" process of RGs 1.174 and 1.177, support the conclusion that Mode 3 is as safe as Mode 4 (if not safer) for repairing an inoperable MCREC system.

Finding. Since the time spent in Mode 3 to perform the repair is infrequent and limited, and in light of defense-in-depth considerations, the proposed change is acceptable.

20. TS 4.5.1.17 and LCO 3.7.5 - Control Room Air Conditioning (CRAC) System (BWR-4 only)

The CRAC system provides temperature control for the control room following control room isolation during accident conditions.

Plant applicability: BWR-4

LCO. Two CRAC subsystems shall be operable.

Condition requiring entry into end state: If one CRAC subsystem is inoperable, the subsystem must be restored to operable status within 30 days (Required Action A.1) If the required actions and associated completion times cannot be met, the plant must be placed in Mode 3 within 12 hours (Required Action B.1) and in Mode 4 within 36 hours (Required Action B.2). If two CRAC subsystems are inoperable, LCO 3.0.3 must be entered immediately (Required Action D 1)

Proposed modification for end state required actions: Delete Required Action B.2 and change Required Action D 1 to "Be in Mode 3" with a Completion Time of "12 hours "

Assessment: The unavailability of one or both air conditioning subsystems has no significant impact on CDF or LERF, independently of the mode of operation at the time of the accident. Furthermore, the challenge frequency of the air conditioning system (i.e., the frequency with which the system is expected to be challenged to provide temperature control for the control room following control room isolation following a DBA) is less than 1.0E-6/yr. Consequently, the conditional probability that this system will be challenged during the repair time interval while the plant is at either the current or the proposed end state (i.e., Mode 4 or Mode 3, respectively) is less than 1.0E-8. This probability is considerably smaller than the probabilities considered "negligible" in RG 1.177 for much higher consequence risks, such as a large early release.

Section 5.1 summarizes the staff's risk argument for approval of TS 4.5.1.17, and LCO 3.7.5, "Control Room Air Conditioning (AC) System." The argument for staying in Mode 3 instead of going to Mode 4 to repair the air conditioning system (one or both trains) is also supported by defense-in-depth considerations. Section 5.2 makes a comparison between the current (Mode 4) and the proposed (Mode 3) end state, with respect to the means available to perform critical functions (i.e., functions contributing to the defense-in-depth philosophy) whose success is needed to prevent core damage and containment failure and mitigate radiation releases. The

risk and defense-in-depth arguments, used according to the "integrated decision-making" process of RGs 1.174 and 1.177, support the conclusion that Mode 3 is as safe as Mode 4 (if not safer) for repairing an inoperable air conditioning system.

Finding: Since the time spent in Mode 3 to perform the repair is infrequent and limited, and in light of defense-in-depth considerations, the proposed change is acceptable.

21. TS 4.5.1.18 and LCO 3.7.6 - Main Condenser Off Gas (BWR-4 only)

The off gas from the main condenser normally includes radioactive gases. The gross gamma activity rate is controlled to ensure that accident analysis assumptions are satisfied and that offsite dose limits will not be exceeded during postulated accidents. The main condenser off gas (MCOG) gross gamma activity rate is an initial condition of a DBA which assumes a gross failure of the MCOG system pressure boundary.

Plant applicability: BWR-4

LCO: The gross gamma activity rate of the noble gases measured at the main condenser evacuation system pretreatment monitor station shall be ≤240 mCi/second after decay of 30 minutes

Condition requiring entry into end state: If the gross gamma activity rate of the gases in the MCOG system is not within limits, the gross gamma activity rate of the noble gases in the MCOG must be restored to within limits within 72 hours (Required Action A.1) If the required action and associated completion time cannot be met, one of the following must occur:

(a) All steam lines must be isolated within 12 hours (Required Action B.1).

(b) The steam jet air ejector (SJAE) must be isolated within 12 hours (Required Action B.2)

(c) The plant must be placed in Mode 3 within 12 hours (Required Action B.3.1) and in Mode 4 within 36 hours (Required Action B.3.2).

Proposed modification for end state required actions: Delete Required Action B.3.2.

Assessment: The failure to maintain the gross gamma activity rate of the noble gases in the MCOG within limits has no significant impact on CDF or LERF, independent of the mode of operation at the time of the accident. Furthermore, the challenge frequency of the MCOG system (i e., the frequency with which the system is expected to be challenged to mitigate offsite radiation releases following a DBA) is less than 1.0E-6/yr. Consequently, the conditional probability that this system will be challenged during the repair time interval while the plant is at either the current or the proposed end state (i.e., Mode 4 or Mode 3, respectively) is less than 1.0E-8. This probability is considerably smaller than the probabilities considered "negligible" in RG 1.177 for much higher consequence risks, such as large early release.

Section 5.1 summarizes the staff's risk argument for approval of TS 4.5.1.18 and LCO 3.7.6, "Main Condenser Off Gas." The argument for staying in Mode 3 instead of going to Mode 4 to

repair the MCOG system (one or both trains) is also supported by defense-in-depth considerations. Section 5.2 makes a comparison between the current (Mode 4) and the proposed (Mode 3) end state, with respect to the means available to perform critical functions (i.e., functions contributing to the defense-in-depth philosophy) whose success is needed to prevent core damage and containment failure and mitigate radiation releases. The risk and defense-in-depth arguments, used according to the "integrated decision-making" process of RGs 1.174 and 1.177, support the conclusion that Mode 3 is as safe as Mode 4 (if not safer) for repairing an inoperable MCOG system.

Finding: Since the time spent in Mode 3 to perform the repair is infrequent and limited, and in light of defense-in-depth considerations, the proposed change is acceptable.

22. TS 4.5.2.6 and LCO 3.6.1.7 - Residual Heat Removal (RHR) Containment Spray System (BWR-6 only)

The primary containment must be able to withstand a postulated bypass leakage pathway that allows the passage of steam from the drywell directly into the primary containment airspace, bypassing the suppression pool. The primary containment also must be able to withstand a low energy steam release into the primary containment airspace. The RHR containment spray system is designed to mitigate the effects of bypass leakage and low energy line breaks.

Plant applicability: BWR-6

LCO. Two RHR containment spray subsystems shall be operable.

Condition requiring entry into end state: If one RHR containment spray subsystem is inoperable, it must be restored to operable status within seven days (Required Action A 1). If two RHR containment spray subsystems are inoperable, one of them must be restored to operable status within eight hours (Required Action B.1). If the RHR containment spray system cannot be restored to operable status within the allotted time, the plant must be placed in Mode 3 within 12 hours (Required Action C.1) and in Mode 4 within 36 hours (Required Action C.2)

Proposed modification for end state required actions: Delete Required Action C.2.

Assessment: The primary containment is designed with a suppression pool so that, in the event of a LOCA, steam released from the primary system is channeled through the suppression pool water and condensed without producing significant pressurization of the primary containment. The primary containment is designed so that with the pool initially at the minimum water level and the worst single failure of the primary containment heat removal systems, suppression pool energy absorption combined with subsequent operator controlled pool cooling will prevent the primary containment pressure from exceeding its design value. However, the primary containment must also withstand a postulated bypass leakage pathway that allows the passage of steam from the drywell directly into the primary containment airspace, bypassing the suppression pool. The primary containment also must withstand a postulated low energy steam release into the primary containment airspace. The main function of the RHR containment spray system is to suppress steam, which is postulated to be released into the primary containment airspace through a bypass leakage pathway and a low energy line

break under DBA conditions, without producing significant pressurization of the primary containment (i.e., ensure that the pressure inside primary containment remains within analyzed design limits).

Under the conditions assumed in the DBA, steam blown down from the break could find its way into the primary containment through a bypass leakage pathway. In addition to the DBA, a postulated low energy pipe break could add more steam into the primary containment airspace. Under such an extremely unlikely scenario (very small frequency of a DBA combined with the likelihood of a bypass pathway and a concurrent low energy pipe brake inside the primary containment), the RHR containment spray system could be needed to condense steam so that the pressure inside the primary containment remains within the analyzed design limits. Furthermore, containments have considerable margin to failure above the design limit (it is very likely that the containment will be able to withstand pressures as much as three times the design limit). For these reasons, the unavailability of one or both RHR containment spray subsystems has no significant impact on CDF or LERF, even for accidents initiated during operation at power. Therefore, it is very unlikely that the RHR containment spray system will be challenged to mitigate an accident occurring during power operation. This probability becomes extremely unlikely for accidents that would occur during a small fraction of the year (less than three days) during which the plant would be in Mode 3 (associated with lower initial energy level and reduced decay heat load as compared to power operation) to repair the failed RHR containment spray system.

Section 5.1 summarizes the staff's risk argument for approval of TS 4.5.2.6 and LCO 3.6.1.7, "Residual Heat Removal (RHR) Containment Spray System." The argument for staying in Mode 3 instead of going to Mode 4 to repair the RHR containment spray system (one or both trains) is also supported by defense-in-depth considerations. Section 5.2 makes a comparison between the current (Mode 4) and the proposed (Mode 3) end state, with respect to the means available to perform critical functions (i.e., functions contributing to the defense-in-depth philosophy) whose success is needed to prevent core damage and containment failure and mitigate radiation releases. The risk and defense-in-depth arguments, used according to the "integrated decision-making" process of RGs 1.174 and 1.177, support the conclusion that Mode 3 is as safe as Mode 4 (if not safer) for repairing an inoperable RHR containment spray system.

Finding: Since the time spent in Mode 3 to perform the repair is infrequent and limited, and in light of defense-in-depth considerations, the proposed change is acceptable.

23 TS 4.5.2.7 and LCO 3.6.1.8 - Penetration Valve Leakage Control System (PVLCS) (BWR-6 only)

The PVLCS supplements the isolation function of primary containment isolation valves (PCIVs) in process lines that also penetrate the secondary containment. These penetrations are sealed by air from the PVLCS to prevent fission products leaking past the isolation valves and bypassing the secondary containment after a design basis LOCA.

Plant applicability: BWR-6

LCO: Two PVLCS subsystems shall be operable.

Condition requiring entry into end state: If one PVLCS subsystem is inoperable, it must be restored to operable status within 30 days (Required Action A.1). If two PVLCS subsystems are inoperable, one of the PVLCS subsystems must be restored to operable status within seven days (Required Action B.1). If the PVLCS subsystem cannot be restored to operable status within the allotted time, the plant must be placed in Mode 3 within 12 hours (Required Action C.1) and in Mode 4 within 36 hours (Required Action C.2).

Proposed modication for end state required actions: Delete Required Action C.2.

Assessment: The BWROG has determined that this system is not significant in BWR PRAs. The unavailability of one or both PVLCS subsystems has no impact on CDF or LERF, independently of the mode of operation at the time of the accident. Furthermore, the challenge frequency of the PVLCS system (i.e., the frequency with which the system is expected to be challenged to prevent fission products leaking past the isolation valves and bypassing the secondary containment) is less than 1.0E-6/yr. Consequently, the conditional probability that this system will be challenged during the repair time interval while the plant is at either the current or the proposed end state (i.e., Mode 4 or Mode 3, respectively) is less than 1.0E-8. This probability is considerably smaller than the probabilities considered "negligible" in RG 1.177 for much higher consequence risks, such as large early release.

Section 5.1 summarizes the staff's risk argument for approval of TS 4.5.2.7 and LCO 3.6.1.8, "Penetration Valve Leakage Control System (PVLCS)." The argument for staying in Mode 3 instead of going to Mode 4 to repair the PVLCS system (one or both trains) is also supported by defense-in-depth considerations. Section 5.2 makes a comparison between the current (Mode 4) and the proposed (Mode 3) end state, with respect to the means available to perform critical functions (i.e., functions contributing to the defense-in-depth philosophy) whose success is needed to prevent core damage and containment failure and mitigate radiation releases. The risk and defense-in-depth arguments, used according to the "integrated decision-making" process of RGs 1.174 and 1.177, support the conclusion that Mode 3 is as safe as Mode 4 (if not safer) for repairing an inoperable PVLCS system.

Finding: Since the time spent in Mode 3 to perform the repair is infrequent and limited, and in light of defense-in-depth considerations, the proposed change is acceptable.

24. TS 4.5.1.10, TS 4.5.2.9 and LCO 3.6.2.3 - Residual Heat Removal (RHR) Suppression Pool Cooling

Some means must be provided to remove heat from the suppression pool so that the temperature inside the primary containment remains within design limits. This function is provided by two redundant RHR suppression pool cooling subsystems.

Plant applicability: BWR-4/6

LCO: Two RHR suppression pool cooling subsystems shall be operable.

Condition requiring entry into end state: If one RHR suppression pool cooling subsystem is inoperable, it must be restored to operable status within seven days (Required Action A.1). If the RHR suppression pool spray subsystem cannot be restored to operable status within the allotted time, the plant must be placed in Mode 3 within 12 hours (Required Action B.1) and in Mode 4 within 36 hours (Required Action B.2).

Proposed modification for end state required actions: Delete Required Action B.2 and add Condition C, with Required Actions C.1 and C.2, to maintain existing requirements unchanged for two RHR suppression pool subsystems inoperable.

Assessment: The BWROG has completed a comparative PRA evaluation of the core damage risks of operation in the current end state versus operation in the proposed Mode 3 end state. The results indicated that the core damage risks while operating in Mode 3 (assuming the individual failure conditions) are lower or comparable to the current end state. One loop of the RHR suppression pool cooling system is sufficient to accomplish the required safety function. By remaining in Mode 3, HPCS, RCIC, and the power conversion system (condensate/feedwater) remain available for water makeup and decay heat removal. Additionally, the EOPs direct the operators to take control of the depressurization function if low pressure injection/spray are needed for RCS makeup and cooling. Therefore, defense-in-depth is improved with respect to water makeup and decay heat removal by remaining in Mode 3.

Finding: Since the time spent in Mode 3 to perform the repair is infrequent and limited, and in light of defense-in-depth considerations, the proposed change is acceptable.

25 TS 4.5.2.12 and LCO 3.6.5.6 - Drywell Vacuum Relief System (BWR-6 only)

The Mark III pressure suppression containment is designed to condense, in the suppression pool, the steam released into the drywell in the event of a LOCA. The steam discharging to the pool carries the non-condensibles from the drywell. Therefore, the drywell atmosphere changes from low humidity air to nearly 100 percent steam (no air) as the event progresses. When the drywell subsequently cools and depressurizes, non-condensibles in the drywell must be replaced to avoid excessive weir wall overflow into the drywell. Rapid weir wall overflow must be controlled in a large break LOCA, so that essential equipment and systems located above the weir wall in the drywell are not subjected to excessive drag and impact loads. The drywell post-LOCA and the drywell purge vacuum relief subsystems are the means by which non-condensibles are transferred from the primary containment back to the drywell.

Plant applicability: BWR-6

LCO: Two drywell post-LOCA and two drywell purge vacuum relief subsystems shall be operable.

Condition requiring entry into end state: If one or two drywell post-LOCA vacuum relief subsystems are inoperable or if one drywell purge vacuum relief subsystem is inoperable for reasons other than being not closed, the subsystem(s) must be restored to operable status within 30 days (Required Actions B.1 and C.1, respectively). If the required actions cannot be

completed within the allotted time, the plant must be placed in Mode 3 within 12 hours and in Mode 4 within 36 hours

Proposed modification for end state required actions: Renumber Condition F (and Required Action F.1, but deleting Required Action F.2) to Condition G (and Required Action G.1) and apply the condition to Conditions B and C. Renumber existing Condition G (and Required Actions G.1 and G.2) to be Condition H (and Required Actions H.1 and H.2). Add a new Condition F (with Required Actions F.1 and F.2) to maintain the existing requirements for Conditions A, D, and E.

Assessment: The BWROG has determined that the specific failure conditions of interest are not risk significant in BWR PRAs. With one or two drywell post-LOCA vacuum relief subsystems inoperable or one drywell purge vacuum relief subsystem inoperable, for reasons other than not being closed, the remaining operable vacuum relief subsystems are adequate to perform the depressurization mitigation function. By remaining in Mode 3, HPCS, RCIC, and the power conversion system (condensate/feedwater) remain available for water makeup and decay heat removal. Additionally, the EOPs direct the operators to take control of the depressurization function if low pressure injection/spray are needed for RCS makeup and cooling Therefore, defense-in-depth is improved with respect to water makeup and decay heat removal by remaining in Mode 3.

Finding: Since the time spent in Mode 3 to perform the repair is infrequent and limited, and in light of defense-in-depth considerations, the proposed change is acceptable.

26. TS 4.5.2.13 and LCO 3.7.1 - Standby Service Water (SSW) System and Ultimate Heat Sink (UHS) (BWR-6 only)

The SSW system (in conjunction with the UHS) is designed to provide cooling water for the removal of heat from certain safe shutdown-related equipment heat exchangers following a DBA or transient.

Plant applicability: BWR-6

LCO: Division 1 and 2 SSW subsystems and UHS shall be operable.

Condition requiring entry into end state: If one or more cooling towers with one cooling tower fan is inoperable, the cooling tower fan(s) must be restored to operable status within seven days (Required Action A.1). If one SSW subsystem is inoperable for reasons other than Condition A, the SSW subsystem must be restored to operable status within 72 hours (Required Action B.1). If the required action(s) and associated completion time(s) cannot be met, the plant must be placed in Mode 3 within 12 hours (Required Action C.1) and in Mode 4 within 36 hours (Required Action C.2).

Proposed modification for end state required actions: Maintain the existing second and third conditions of Condition C unchanged by transferring them to a new Condition D (with Required Actions D.1 and D.2) and delete Required Action C.2.

Assessment: The BWROG determined that the specific failure condition of interest is not risk significant in BWR PRAs. With the specified inoperable components/subsystems, a sufficient number of operable components/subsystems are still available to perform the heat removal function. By remaining in Mode 3, HPCS, RCIC, and the power conversion system (condensate/feedwater) remain available for water makeup and decay heat removal. Additionally, the EOPs direct the operators to take control of the depressurization function if low pressure injection/spray are needed for RCS makeup and cooling. Therefore, defense-in-depth is improved with respect to water makeup and decay heat removal by remaining in Mode 3.

Finding: Since the time spent in Mode 3 to perform the repair is infrequent and limited, and in light of defense-in-depth considerations, the proposed change is acceptable.

27. TS 4.5.2.14 and LCO 3.7.3 - Control Room Fresh Air (CRFA) System (BWR-6 only)

The CRFA system provides a radiologically controlled environment from which the unit can be safely operated following a DBA. The CRFA system consists of two independent and redundant high efficiency air filtration subsystems for treatment of recirculated air or outside supply air. Each subsystem consists of a demister, an electric heater, a prefilter, a high efficiency particulate air (HEPA) filter, an activated charcoal adsorber section, a second HEPA filter, a fan, and the associated ductwork and dampers. Demisters remove water droplets from the airstream. Prefilters and HEPA filters remove particulate matter that may be radioactive. The charcoal adsorbers provide a holdup period for gaseous iodine, allowing time for decay.

Plant applicability: BWR-6

LCO: Two CRFA subsystems shall be operable.

Condition requiring entry into end state: If one CRFA subsystem is inoperable, it must be restored to operable status within seven days (Required Action A.1). If the CRFA subsystem cannot be restored to operable status within the allotted time, the plant must be placed in Mode 3 within 12 hours (Required Action B.1) and in Mode 4 within 36 hours (Required Action B.2). If two CRFA subsystems are inoperable in Modes 1, 2, or 3, LCO 3.0.3 must be entered immediately (Condition D).

Proposed modification for end state required actions: Delete Required Action B.2 and change Required Action D.1 to "Be in Mode 3" with a Completion Time of "12 hours."

Assessment: The unavailability of one or both CRFA subsystems has no significant impact on CDF or LERF, independent of the mode of operation at the time of the accident. Furthermore, the challenge frequency of the CRFA system (i.e., the frequency with which the system is expected to be challenged to provide a radiologically controlled environment in the main control room following a DBA which leads to core damage and leaks of radiation from the containment that can reach the control room) is less than 1.0E-6/yr. Consequently, the conditional probability that this system will be challenged during the repair time interval while the plant is at either the current or the proposed end state (i.e., Mode 4 or Mode 3, respectively) is less than

1.0E-8. This probability is considerably smaller than the probabilities considered "negligible" in RG 1.177 for much higher consequence risks, such as a large early release.

Section 5.1 summarizes the staff's risk argument for approval of TS 4.5.2.14 and LCO 3.7.3, "Control Room Fresh Air (CRFA) System." The argument for staying in Mode 3 instead of going to Mode 4 to repair the CRFA system (one or both trains) is also supported by defense-in-depth considerations. Section 5.2 makes a comparison between the current (Mode 4) and the proposed (Mode 3) end state, with respect to the means available to perform critical functions (i.e., functions contributing to the defense-in-depth philosophy) whose success is needed to prevent core damage and containment failure and mitigate radiation releases. The risk and defense-in-depth arguments, used according to the "integrated decision-making" process of RGs 1.174 and 1.177, support the conclusion that Mode 3 is as safe as Mode 4 (if not safer) for repairing an inoperable CRFA system.

Finding: Since the time spent in Mode 3 to perform the repair is infrequent and limited, and in light of defense-in-depth considerations, the proposed change is acceptable.

28. TS 4.5.2.15 and LCO 3.7.4 - Control Room Air Conditioning (CRAC) System (BWR-6 only)

The CRAC system provides temperature control for the control room following control room isolation The CRAC system consists of two independent, redundant subsystems that provide cooling and heating of recirculated control room air. Each subsystem consists of heating coils, cooling coils, fans, chillers, compressors, ductwork, dampers, and instrumentation and controls to provide for control room temperature control. The CRAC system is designed to provide a controlled environment under both normal and accident conditions. A single subsystem provides the required temperature control to maintain a suitable control room environment for a sustained occupancy of 12 persons.

Plant applicability: BWR-6

LCO. Two CRAC subsystems shall be operable.

Condition requiring entry into end state: If one CRAC subsystem is inoperable, it must be restored to operable status within 30 days (Required Action A.1). If the required actions and associated completion times cannot be met, the plant must be placed in Mode 3 within 12 hours (Required Action B.1) and in Mode 4 within 36 hours (Required Action B.2). If two CRAC subsystems are inoperable, LCO 3.0.3 must be entered immediately (Condition D).

Proposed modification for end state required actions: Delete Required Action B.2 and change Required Action D.1 to "Be in Mode 3" with a Completion Time of "12 hours."

Assessment: The unavailability of one or both air conditioning subsystems has no significant impact on CDF or LERF, independent of the mode of operation at the time of the accident. Furthermore, the challenge frequency of the air conditioning system (i.e., the frequency with which the system is expected to be challenged to provide temperature control for the control room following control room isolation following a DBA which leads to core damage) is less than

1.0E-6/yr. Consequently, the conditional probability that this system will be challenged during the repair time interval while the plant is at either the current or the proposed end state (i.e., Mode 4 or Mode 3, respectively) is less than 1.0E-8. This probability is considerably smaller than the probabilities considered "negligible" in RG 1.177 for much higher consequence risks, such as a large early release.

Section 5.1 summarizes the staff's risk argument for approval of TS 4.5.2.15 and LCO 3.7.4, "Control Room Air Conditioning (CRAC) System." The argument for staying in Mode 3 instead of going to Mode 4 to repair the CRAC system (one or both trains) is also supported by defense-in-depth considerations. Section 5.2 makes a comparison between the current (Mode 4) and the proposed (Mode 3) end state, with respect to the means available to perform critical functions (i.e., functions contributing to the defense-in-depth philosophy) whose success is needed to prevent core damage and containment failure and mitigate radiation releases. The risk and defense-in-depth arguments, used according to the "integrated decision-making" process of RGs 1.174 and 1.177, support the conclusion that Mode 3 is as safe as Mode 4 (if not safer) for repairing an inoperable CRAC system.

Finding: Since the time spent in Mode 3 to perform the repair is infrequent and limited, and in light of defense-in-depth considerations, the proposed change is acceptable.

29. TS 4.5.2.16 and LCO 3.7.5 - Main Condenser Off Gas (BWR-6 only)

The off gas from the main condenser normally includes radioactive gases. The gross gamma activity rate is controlled to ensure that accident analysis assumptions are satisfied and that offsite dose limits will not be exceeded during postulated accidents.

Plant applicability: BWR-6

LCO: The gross gamma activity rate of the noble gases measured at the off gas recombiner effluent shall be ≤380 mCi/second after decay of 30 minutes.

Condition requiring entry into end state: If the gross gamma activity rate of the noble gases in the MCOG is not within limits, the gross gamma activity rate of the noble gases in the MCOG must be restored to within limits within 72 hours (Required Action A.1). If the required action and associated completion time cannot be met, one of the following must occur:

(a) All steam lines must be isolated within 12 hours (Required Action B.1).

(b) The SJAE must be isolated within 12 hours (Required Action B.2).

(c) The plant must be placed in Mode 3 within 12 hours (Required Action B.3.1) and in Mode 4 within 36 hours (Required Action B.3.2).

Proposed modification for end state required actions: Delete Required Action B.3.2.

Assessment: The failure to maintain the gross gamma activity rate of the noble gases in the MCOG within limits has no significant impact on CDF or LERF, independent of the mode of operation at the time of the accident. Furthermore, the challenge frequency of the MCOG system (i.e., the frequency with which the system is expected to be challenged to mitigate offsite radiation releases following a DBA) is less than 1.0E-6/yr. Consequently, the conditional probability that this system will be challenged during the repair time interval while the plant is at either the current or the proposed end state (i.e., Mode 4 or Mode 3, respectively) is less than 1.0E-8. This probability is considerably smaller than the probabilities considered "negligible" in RG 1.177 for much higher consequence risks, such as large early release.

Section 5.1 summarizes the staff's risk argument for approval of TS 4.5.2.16 and LCO 3.7.5, "Main Condenser Off Gas." The argument for staying in Mode 3 instead of going to Mode 4 to repair the MCOG system (one or both trains) is also supported by defense-in-depth considerations. Section 5.2 makes a comparison between the current (Mode 4) and the proposed (Mode 3) end state, with respect to the means available to perform critical functions (i.e., functions contributing to the defense-in-depth philosophy) whose success is needed to prevent core damage and containment failure and mitigate radiation releases. The risk and defense-in-depth arguments, used according to the "integrated decision-making" process of RGs 1.174 and 1.177, support the conclusion that Mode 3 is as safe as Mode 4 (if not safer) for repairing an inoperable MCOG system.

Finding: Since the time spent in Mode 3 to perform the repair is infrequent and limited, and in light of defense-in-depth considerations, the proposed change is acceptable.

7.0 COMMITMENTS NEEDED TO IMPLEMENT THE TSs RELATED TO TOPICAL REPORT NEDC-32988

Any licensee requesting the TS changes to operate a plant in accordance with this BWROG topical report, must commit to implement the following stipulations in the TS or its associated Bases. The following stipulations assure that the implementation of this topical report will be consistent with staff's safety evaluation:

1. Entry into the shutdown modes approved in this SE shall be for the primary purpose of accomplishing short-duration repairs which necessitated exiting the original operating mode. In response to the staff's questions, the BWROG stated that "The BWRs are most likely to stay in hot shutdown for no more than 2 to 3 days and definitely, not more than a week." The staff expects that the licensees will follow this guidance.

2. Appropriate plant procedures and administrative controls will be used when the plant is operated in the proposed end states.

3. Entry into and use of the proposed end states shall be in accordance with the requirements of 10 CFR 50.65(b)(4). The licensee should do a risk assessment with respect to performance of the key shutdown safety functions, as described in Section 4 of this SE.

4. The purpose of the BWROG request is to allow corrective maintenance in a safe operating mode after an CT has been exceeded and minimize the corrective action time so that the plant can be restored to power operation. Ordinarily the failures result in a degraded plant condition. Consequently, with respect to additional licensee outage activities that could affect the safe conduct of operations and that are not directly required for correction of the failure or failures that caused the CT to be exceeded, a licensee must make two commitments:

   a. The licensee will perform a safety assessment in accordance with the maintenance rule prior to undertaking such additional activities.

   b. If conditions change so that the safety assessment is no longer valid, the licensee will suspend all such additional activities via a process consistent with safety until the assessment has been revalidated. The staff expects the licensee to make a contingency plan to address this situation. The contingency plan may require such actions as (1) suspending the activity until conditions are again appropriate, (2) terminating the activity and starting over when conditions are again appropriate, and (3) continuing the activity if safety is best ensured by completing the activity. The staff recognizes that such decisions may have to be made on the basis of engineering judgement should an unforseen situation arise.

5. The requested end state changes do not prohibit licensees from entering cold shutdown if they wish to do so for operational reasons or maintenance requirements. In such cases, the specific requirements associated with the requested end state changes do not apply.

8.0 CONCLUSION

The staff's evaluation approves only operation as described and acceptably justified in References 1 and 2. The staff finds that the topical report used realistic assumptions regarding plant conditions and the availability of the various mitigative systems (including during transitions requiring operator actions) in analyzing the risks and considering the defense-in-depth and safety margins. Thus, the staff concludes that the topical report uses realistic assumptions to justify the change in end state.

Because BWRs are likely to stay in hot shutdown for no more than 2 to 3 days, the probability of transients and accidents is low.

9.0 REFERENCES

1. Anthony R. Pietrangelo (NEI) to William D. Beckner (NRC), "Technical Justification to Support Risk-Informed Modification to Selected Required Action End States for BWR Plants, BWR Owners' Group Risk Informed Technical Specification Committee, NEDC-32988, Rev. 2, December 2000," dated January 5, 2001.

2. Anthony R. Pietrangelo (NEI) to William D. Beckner (NRC), enclosing a letter dated October 26, 2001, from J. M. Kenny (BWR Owners Group) to Biff Bradley (NEI), "BWROG Response to NRC Request for RAN On NEDC-32988-NRC Project 291," dated October 31, 2001.

3. Biff Bradley (NEI) ro J. M. Kenny (BWR Owners Group), "BWROG Response to NRC Draft Request for Additional Information (RAI) on Risk-Informed Technical Specification Initiative 3 - NRC Project Number 291," dated November 6, 2001.

4. NUREG-1433, Standard Technical Specification, General Electric Plants, BWR/4, Rev. 2, April 2001.

5. NUREG-1434, Standard Technical Specification, General Electric Plants, BWR/6, Rev. 2, April 2001.

6. *Federal Register*, Vol. 58, No. 139, Pages 39132-39139, "Final Policy Statement on TS Improvements for Nuclear Power Plants," July 22, 1993.

7. Code of Federal Regulations Title 10, Section 50.36, "Technical Specifications," Section 50.65, "Requirements for monitoring the effectiveness of maintenance of nuclear power plants."

8. Regulatory Guide 1.182, "Assessing and Managing Risk Before Maintenance Activities at Nuclear Power Plants," May 2000.

9. Industry Guideline for Monitoring the Effectiveness of Maintenance Activities at Nuclear Power Plants. Nuclear Energy Institute, NUMARC 93-01, Revision 2, April 1996.

Attachment: List of Acronyms

Principal Contributors: G. Thomas
N. Saltos
J. Tatum
J. Lazevnick

Date: September 27, 2002

LIST OF ACRONYMS

AC	Alternating current
ADS	Automatic depressurization system
ASME	American Society of Mechanical Engineers
ATWS	Anticipated transients without scram
BOP	Balance of plant
BWR	Boiling water reactor
BWROG	Boiling Water Reactor Owners Group
CDF	Core damage frequency
CE	Combustion Engineering
CEOG	Combustion Engineering Owners Group
CRAC	Control room air conditioning
CRD	Control rod drive
CRFA	Control room fresh air
CRMP	Configuration risk management plan
CS	Containment spray
CST	Condensate storage tank
CT	Completion time
DBA	Design basis accident
DC	Direct current
DG	Diesel generator
DW	Drywell
ECCS	Emergency core cooling system
EDG	Emergency diesel generator
EOP	Emergency operating procedure
EPG	Emergency procedure guidelines
EPM	Electric power monitoring
ESF	Engineered safety feature
GDC	General Design Criteria
GE	General Electric
HEPA	High efficiency particulate air
HPCI	High pressure coolant injection
HPCS	High pressure core spray
IC	Isolation condenser
IPE	Individual plant examination
LCO	Limiting condition for operation
LCS	Leakage control system
LERF	Large early release frequency
LLS	Low-low set
LOCA	Loss-of-coolant accident
LOOP	Loss of offsite power
LPCI	Low pressure coolant injection
LPCS	Low pressure core spray

MCOG	Main condenser off gas
MCREC	Main control room environmental control
MD	Motor-driven
MG	Motor generator
MSIV	Main steam isolation valve
NEI	Nuclear Energy Institute
NRC	Nuclear Regulatory Commission
PCS	Power conversion system
PRA	Probabilistic risk assessment
PSW	Plant service water
PVLCS	Penetration valve leakage control system
PWR	Pressurized water reactor
RCIC	Reactor core isolation cooling
RCPB	Reactor coolant pressure boundary
RCS	Reactor cooling system
RHR	Residual heat removal
RHRSW	Residual heat removal service water
RPS	Reactor protection system
RPV	Reactor pressure vessel
SBO	Station blackout
SD	Steam-driven
SDC	Shut-down cooling
SE	Safety evaluation
SGT	Standby gas treatment
SJAE	Steam jet air ejector
SPC	Suppression pool cooling
SRV	Safety relief valve
SSC	Structures, systems and components
SSW	Standby service water
STS	Standard Technical Specifications
SW	Service water
UHS	Ultimate heat Sink

II

NEI

NUCLEAR ENERGY INSTITUTE

Anthony R Pietrangelo
DIRECTOR, RISK & PERFORMANCE-BASED REGULATION DEPARTMENT
NUCLEAR GENERATION DIVISION

October 31, 2001

Dr. William D. Beckner
Chief, Technical Specifications Branch
Office of Nuclear Reactor Regulation
U. S. Nuclear Regulatory Commission
Washington, DC 20555

Dear Dr. Beckner:

This letter transmits BWR Owners Group responses to an NRC request for additional information on the BWR technical report to support Initiative 1 of the risk-informed technical specification effort, NEDC-32988, Rev 2, "Technical Justification to Support Risk-Informed Modification to Selected Required Action End States for BWR Plants."

It is our understanding that, due to the generic nature of this effort, no review fees will be incurred to NEI or the BWR Owners Group relative to NRC review of the BWROG report, corresponding RAIs, and issuance of the related standard technical specifications change.

Please contact me, or Biff Bradley of the NEI staff, if you have any questions.

Sincerely,

Anthony R. Pietrangelo

Enclosure

Cc: R. M. Pulsifer, NRC (w/ enclosure)
R. A. Hill, GE (w/o enclosure)

BWROG RESPONSE TO REQUEST FOR ADDITIONAL INFORMATION

BWR OWNERS GROUP TECHNICAL REPORT NEDC-32988, REV. 2

"TECHNICAL JUSTIFICATION TO SUPPORT RISK-INFORMED

MODIFICATION TO SELECTED REQUIRED ACTION END STATES FOR BWR PLANTS"

1. On page 3-1 it is stated that one of the primary considerations in allowing the vessel to stay pressurized in a hot shutdown mode (Mode 3) was the fact that Mode 3 "Achieves primary risk reduction by reducing source term/decay heat as the result of shutting down the reactor." What is meant by "primary" risk reduction? Does this statement imply a comparison between the risk of continued operation at power versus the risk of shutting down the plant? Please clarify this statement.

Response:

Primary risk reduction is inherent in either hot shutdown mode (Mode 3) or cold shutdown mode (Mode 4) because major safety function needs have either been reduced or eliminated. Reactivity control is not a concern in Modes 3 or 4, since the reactor is already shut down. Reactor overpressure control is also not a concern since the reactor is already shut down and pressure is usually lower than normal operating pressure. The core cooling requirements consist only of decay heat removal in Mode 3 or 4, which is much less than the requirements under operating conditions. Containment cooling requirements in Mode 3 or 4 are less than the requirements under operating conditions. This risk reduction is not a consideration in comparing the risk between Mode 3 and Mode 4 operation. The report will be revised to reflect this.

2. On page 3-1 it is stated that one of the primary considerations in allowing the vessel to stay pressurized in Mode 3 was that this "Avoids challenging the shutdown cooling system and associated potential for personnel errors." Please identify important personnel errors associated with the alignment of the shutdown cooling system which are modeled in the probabilistic risk assessment (PRA) used to perform the risk assessments mentioned in the report.

Response:

There is an operator action associated with engaging RHR in the shutdown cooling mode of operation while transitioning from Mode 3 to Mode 4. The associated operator error has the potential to drain the reactor. However, this transition risk is small and not specifically evaluated. It is our judgment that if the transition risk were to be included, it could make the case for staying in Mode 3 even stronger. There is also a potential for similar operator error while in Mode 4. This is modeled as an initiating event, small loss of coolant inventory, in Mode 4.

3. At the beginning of page 4-2 it is stated.

"The core damage frequencies (CDFs) associated with being in Modes 3 and 4 was evaluated Then, for both modes, the increase in CDF associated with the specific equipment/system being unavailable was calculated. The relative CDF change provided an assessment of which mode is a safer state to be in when the equipment/system is unavailable."

The results of these calculations were not included in the submitted report. This information is needed to finalize the review and prepare a safety evaluation. Please submit this information Also, please clarify the last sentence in the above statement by defining the term "relative CDF change." It appears that, in general, both the base case CDFs (associated with the two Modes) as well as the CDF changes (when the equipment is assumed unavailable) are needed to determine which mode is the safer state to be in when equipment is unavailable.

Response:

The assessment of which mode is a safer state to be in when equipment or a system is unavailable is based on the relative difference in CDF between Modes 3 and 4 rather than the absolute CDF value for each mode. Table 3-1 lists the relative and absolute difference in CDF between Mode 3 and 4 for selected combinations of equipment unavailability.

Table 3-1

Mode 3 and Mode 4 Quantification Results

Case	Description	CDF		Mode 3 to 4 CDF Increase	
		MODE 3	MODE 4	Absolute	Relative
A	Base Case (No Maintenance Events)	1.529E-06	1.517E-06	-1.20E-08	-0.8%
B	One LPCS Loop Out	1.531E-06	1.518E-06	-1.30E-08	-0.8%
C	Both RHR Pumps in Loop A Out	1.359E-05	2.260E-05	9.01E-06	66.3%
D	One SW Booster Pump Out	1.587E-06	1.620E-06	3.30E-08	2.1%
E	One SW Booster Pump in each Loop Out	1.643E-06	1.671E-06	2.80E-08	1.7%
F	Two SW Booster Pumps in One Loop Out	1.359E-05	2.261E-05	9.02E-06	66.4%
G	One SW Pump Out	1.556E-06	1.557E-06	1.00E-09	0.1%
H	One SW Pump in each Subsystem Out	1.599E-06	1.599E-06	0.00E+00	0.0%
I	One DG Inoperable	7.543E-06	7.532E-06	-1.10E-08	-0.1%
J	Two DGs Inoperable	1.066E-04	1.065E-04	-1.00E-07	-0.1%
K	One DG and Emergency Offsite Power Out	6.000E-05	6.109E-05	1.09E-06	1.8%
L	Two DGs and Emergency Offsite Power Out	9.662E-04	9.631E-04	-3.10E-06	-0.3%
M	4.1kV Bus 1F Out	1.936E-04	1.078E-03	8.84E-04	456.8%
N	125V DC Bus 1A Out	2.584E-05	3.538E-05	9.54E-06	36.9%
R	HPCI Out	1.552E-06	N/A	-3.50E-08	-2.3%
S	HPCI and One LPCI Out	1.361E-05	N/A	8.99E-06	66.1%
T	HPCI and One LPCS Out	1.554E-06	N/A	-3.60E-08	-2.3%
U	RCIC Out	1.574E-06	N/A	-5.70E-08	-3.6%

4. On page 4-2, under General Assumptions, it is stated "The plant is assumed to be shut down to handle a specific LCO item and, consequently, it is assumed that no additional systems are unavailable due to maintenance at that time." However, it is not clear what prevents some redundant trains of other systems to be unavailable for maintenance. Please explain.

Response:

If a single LCO item allows one or more components/systems out of service for maintenance, this unavailability was included in the analysis. There are several cases in Table 3-1 of RAI 3 where there were multiple components/systems assumed unavailable.

The analysis did not consider the unavailability of components/systems resulting from multiple LCOs. The unavailability of redundant trains of other components/systems is normally covered by a single LCO. Even if multiple LCOs occur, the plant's Configuration Risk Management Program (CRMP) implemented in response to the Maintenance Rule (10 CFR 50.65 (a)(4)) will ensure that no unsafe configuration is entered.

5. (a) On page 4-2, under General Assumptions, it is stated "The PSA models [for] both Mode 3 and Mode 4 are for steady states." Does this imply that no transition risk between Modes 3 and 4 was considered? (b) Was credit taken in the risk assessment for the low-pressure systems, as defense-in-depth when the high-pressure systems are unavailable or fail, by depressurizing the reactor? (c) Similarly, once core cooling fails in Mode 4, the reactor pressure increases and high pressure systems, such as high pressure coolant injection (HPCI) and reactor core isolation coolant (RCIC), can be used to cool the core Obviously, the use of these "defense-in-depth" systems involves transition risks. (d) Please explain how these "defense-in-depth" systems were credited in the risk assessment and what assumptions were made regarding failures (e.g., human errors) during the transition from Mode 3 to Mode 4 and vice versa.

Response (a):

The transition risk from Mode 3 to Mode 4 is mainly the probability of core damage due to a drain-down event while RHR valves are being aligned for the shut-down cooling mode of operation. The transition risk is judged to be small and was not evaluated. It is our judgment that if the transition risk were to be included, it would make the case for staying in Mode 3 even stronger.

Response (b):

Credit was taken for low pressure systems in the Mode 3 evaluation following the failure of the high pressure systems. Low pressure injection was preceded by reactor depressurization. In Mode 4, the reactor is already depressurized and low pressure systems can be used as needed.

Response (c):

No credit was taken for the high pressure systems RCIC & HPCI following the failure of cooling systems in Mode 4 and subsequent repressurization of the reactor. This would constitute an unplanned mode change and require opening the MSIVs and could require re-establishing containment.

Response (d):

To understand how the "defense-in-depth" systems were credited in the risk assessment, please see the response to RAI 8 and the success criteria listed in Tables 11-1 through 11-6 in the response to RAI 11. The assumptions made regarding failures (e.g., human errors) during the transition from Mode 3 to Mode 4 is discussed above in Part (a) of RAI 5.

6. On page 4-3 it is stated that the control rod drive (CRD) system "can be a significant contributor to core cooling in Mode 3." Please clarify this statement by referring to the success criteria and related assumptions of using the CRD system to cool the core in Mode 3.

Response:

The phrase "significant contributor" is confusing and is not needed to convey the message in the report that CRD system can provide adequate core cooling. We will replace the sentence in question with the statement the CRD system "can provide the core cooling needed in Modes 3 and 4 because of reduced decay heat".

The CRD system normally does not have the core cooling function. However, following an accident initiation, the plant operator can align the pumps for coolant injection at high pressure. A specific plant procedure has to be followed to align the pumps and to maximize the flow.

The CRD system can provide the core cooling function for loss of the PCS and loss of offsite power initiators for both Modes 3 and 4. For more details on CRD capability, please refer to the success criteria table provided in response to RAI 11.

7. On page 4-3 there is a short discussion about depressurizing the reactor in order to use low-pressure systems while in Mode 3. It is stated that "the Emergency Operating Procedures (EOPs) require the operator to depressurize the reactor manually; however, if the operator does not depressurize in time, the Automatic Depressurization System (ADS) will be initiated automatically." Please explain how depressurization works in the various BWR designs (e g , systems, success criteria, procedural requirements, actuation type) and how it is modeled in the risk assessment.

Response:

The Automatic Depressurization System is part of the ECCS designed to automatically depressurize the RPV in an emergency to allow low pressure ECCS (e.g., LPCS and/or LPCI) to inject. The ADS, through selected safety/relief valves (SRVs) and in conjunction with the low-pressure ECCS, functions as a backup to the operation of the high-pressure ECCS. Following a small break LOCA that is insufficient to depressurize the reactor, the ADS depressurizes the vessel if the high-pressure makeup systems fail to maintain water level above Level 1, permitting the operation of the low pressure ECCS.

Post-TMI modifications to the ADS system and EOPs were developed to (1) extend ADS operation to transient events which do not result in a release of steam to the drywell but which may require depressurization of the Reactor Pressure Vessel (RPV) to maintain adequate core cooling and (2) conform to the ADS logic in post-TMI Emergency Procedure Guidelines (EPGs) [Reference: "BWROG Evaluation of NUREG-0737 Item II.K.3.18 Modification of Automatic Depressurization System Logic," NEDE-30045, February 1983]. The modifications reduce the need for operator action to assure adequate core cooling, especially for transient and accident events which do not directly produce a high drywell pressure signal and are degraded by a loss of all high pressure injection systems. Under these circumstances, adequate core cooling can be assured by either manual or automatic depressurization of the RPV followed by injection from the low pressure systems. Before ADS modification, manual RPV depressurization was likely to be needed to assure adequate core cooling under these circumstances.

A typical BWR ADS has post-TMI ADS modifications to either (1) use a high drywell pressure bypass timer or (2) eliminate the high drywell pressure requirement altogether. A typical ADS with the first type of post-TMI modification is activated automatically on coincident low-low-low water level (Level 1), high drywell pressure, independent confirmation of low water level (Level 3), and confirmation that at least one low-pressure ECCS pump is running. If no high drywell pressure is present, the ADS will activate with a ten-minute delay (the high drywell pressure bypass timer) if all the other conditions are satisfied. This feature supports mitigation of breaks outside containment (no high drywell pressure signal) or degraded loss of feedwater transients. For an ADS with the second typical post-TMI modification, the high drywell pressure requirement has been eliminated and only sustained low water level is sufficient for ADS initiation. Following receipt of all the initiating signals, a two-minute ADS timer is started. This delay allows the operator time to prevent the ADS operation if the signals are erroneous or if the condition has corrected itself or if ADS should be suppressed. All these precautions are to prevent an unnecessary rapid vessel depressurization with its attending stresses, and the injection of the suppression pool water into the vessel via the low-pressure ECCS. The manual inhibit

switch permits the operator to terminate actuation of the ADS if water level is being restored using RCICS. Since RCICS cannot restore level within the two minute time delay period, this manual switch is necessary to prevent depressurization. The manual inhibit switch is also used when RPV depressurization by ADS actuation is not required to ensure adequate core cooling. The operator also has the flexibility to manually initiate the ADS system as the situation warrants.

The event trees model depressurization by the node X1. The top gate in the X1 fault tree of the generic model is "Failure of RPV Depressurization". Success implies automatic or manual operation of at least 3 SRVs to depressurize the reactor to allow low pressure coolant injection." For automatic ADS initiation the fault tree is based on the post-TMI ADS modification, which eliminates the need for high drywell pressure. The automatic initiation of the ADS system is backed up by manual initiation of ADS based on emergency procedures.

8. On page 4-4 it is stated: "Based on this qualitative comparison, it is judged that there are more systems that can provide this function in Mode 3 than in Mode 4." However, such a statement is not clearly supported by the two sets of systems listed on page 4-3. Please explain.

Response:

In Section 4.4.2 (on pages 4-3 and 4-4), the major differences between the systems available in Modes 3 and 4 relate to core decay heat removal and containment heat removal. The systems available in each of the modes are compared in Tables 8-1 and 8-2.

Table 8-1 Systems Available for Core Decay Heat Removal

No.	System	Mode 3	Mode 4
1	Power Conversion System	Available	Not Available
2	HPCI/HPCS System	Available	HPCI Not Available. HPCS available for BWR-5 and -6.
3	RCIC System	Available	Not Available
4	CRD System	Available	Available
5	LPCS System	Available(1)	Available
6	LPCI System	Available(1)	Available
7.	Condensate System	Available(1)	Available
8	SW Cross-Tie System	Available(1)	Available
9.	Fire-Water System	Available(1)	Available

Note for Table 8-1: (1) Requires RPV depressurization with 3 SRVs.

As can be seen from the table, nine systems are available in Mode 3 whereas only six (seven for BWR-5 and -6 plants) are available in Mode 4 for core cooling.

Table 8-2 Systems Available for Containment Heat Removal

No.	System	Mode 3	Mode 4
1	Power Conversion System	Available(1)	Not Available
2	RHR System	Available(1)	Available
3	Containment Vent	Available(1)	Available

Note for Table 8-2: (1) Requires RPV depressurization with 3 SRVs.

As can be seen from Table 8-2, one additional system is available for containment heat removal in Mode 3.

9. One of the steps in developing the Mode 3 and 4 PRA models (listed on page 4-5) involved the identification of initiating events (IEs). However, the selected IEs are listed on page 4-6 without adequate explanation on how they were derived This information is needed to ensure that all relevant IEs have been considered An acceptable approach is to start with an initial "generic" list (which includes all postulated types of IEs) and screen out those that either do not apply in Modes 3 and 4 or are unimportant based on bounding qualitative arguments. Please provide this information.

Response:

Sandia National Labs did a very detailed study of shutdown risk in NUREG/CR-6143 (SAN93-2440), "Evaluation of Potential Severe Accidents During Low Power and Shutdown Operation at Grand Gulf, Unit 1." In this study, a number of initiators were considered initially, and based on the detailed analysis many were ruled out. These initiators are compared to the initiators in the BWROG report, NEDC-32988.

The NUREG/CR-6143 study uses seven Plant Operating States (POS) to define the various states of the plants, whereas in the BWROG report two operating modes (Mode 3 and Mode 4) are investigated. None of the seven POS in the NUREG are completely identical to either Mode 3 or 4. However, some comparisons can be made, as discussed below.

In the BWROG report, the Mode 3 plant state is defined as the steady state condition with RPV pressure somewhat above the level where RHR is normally engaged in SDC mode. In this mode, the reactor cooling is performed by the power conversion system (feed water pumps are secured and condensate system is used for reactor cooling function). Mode 3 is essentially equivalent to Plant Operating State 3 (POS 3) in NUREG/CR-6143. However, in the Sandia study, the initiating events and configuration of mitigating systems for POS 3 are assumed to be similar to full power operation and the following 12 initiators are identified.

1. Loss of Offsite Power (LOSP)
2. Transient with loss of Power Conversion System (PCS)
3. Small LOCA at Low Pressure
4. Loss of all Plant Service Water
5. Transient with PCS initially available
6. Transient involving loss of Feedwater
7. Transient caused by Inadvertent Open Relief Valve (IORV)
8. Large LOCA at Low Pressure
9. Intermediate LOCA at Low Pressure
10. Small-small LOCA at Low Pressure
11. Loss of all Turbine Building Cooling Water
12. Loss of Instrument Air

The first four initiators also are considered as initiating events for Mode 3 operation in the NEDC-32988 report.

The fifth initiator "Transient with PCS initially available" and the sixth initiator "Transient involving loss of Feedwater" are not specifically identified, but are subsumed into the Loss of PSC initiation event Mode 3.

The frequency of IORV is expected to be very low because of the low pressure Mode 3 condition. Therefore, the seventh initiator is not considered in Mode 3 operation.

The eight and ninth initiators are not considered in Mode 3 operation, because the frequencies of large and intermediate LOCA at Low Pressure are expected to be very small. NUREG/CR-5750 estimates the frequency of large LOCA (break greater than 5-inch diameter piping) and intermediate LOCA, to be 2.5E-5 and 2.3E-5 per year respectively, for the full power conditions. Since the pressure and energy levels associated with Mode 3 are significantly lower than for normal power operation, the large and intermediate LOCA frequencies are expected to be even smaller than for normal power operation. Therefore, large and intermediate LOCA are not considered as initiating events for Mode 3 operation.

The tenth initiator "Small-small LOCA at low pressure" is included in the "Small LOCA at Low Pressure " initiating event for Mode 3 operation.

The eleventh initiator "Loss of all Turbine Building Cooling Water," though not specifically identified, is subsumed in Loss of PSC initiation frequency.

The Loss of Instrument Air initiator is not expected to contribute any significant plant risk and therefore, is not included in the initiator list of Mode 3 operation.

The four initiators that are selected for Mode 3 operation are as follows:

1. Loss of offsite power
2. Loss of power conversion system
3. Small loss-of-coolant accident
4. Loss of service water

The Mode 4 plant state is defined as the steady state condition with coolant temperature below 200°F. The vessel head remains tensioned. Reactor cooling is performed by one RHR loop in SDC mode. There is no POS that is identical to Mode 4. However, it is judged that Mode 4 is essentially equivalent to a combination of Plant Operating State 4/5 (POS 4 and POS 5) in the NUREG/CR-6143 report.

In NUREG/CR-6143 initially, 34 events are considered as initiating events in POS 5. Many of these contribute very little to the total plant core damage frequency (CDF). Ten of these 34 initiators each contribute 1% or more to CDF and each of the following five initiators contribute 10% or more to plant CDF:

1. Loss of offsite power
2. Large LOCA during non-hydro conditions
3. Intermediate LOCA during non-hydro conditions

4. Large LOCA during hydro conditions
5. Intermediate LOCA during hydro conditions.

The "Loss of Offsite Power" initiator is included in both the NEDC-32988 study as well as the NUREG report.

Large and intermediate LOCAs during non-hydro conditions are not expected to contribute significantly to plant CDF. As noted earlier, NUREG/CR-5750 estimates the frequency of large LOCA and intermediate LOCA to be 2.5E-5 and 2.3E-5 per year respectively for the full power conditions. Since the pressure and energy levels associated with Mode 4 conditions are significantly lower than for normal power operation, the large and intermediate LOCA frequencies are expected to be even smaller than for normal power operation. Therefore, large and intermediate LOCA during non-hydro conditions are not considered as initiating events for Mode 4 operation

In the NEDC-32988 report, it is assumed that the purpose of being in Mode 3 or 4 is to perform the needed repair for removing the LCO and not to carry out other repairs or maintenance tasks. Therefore, hydro test is not relevant in MODE 4 operation and large and intermediate LOCA during hydro conditions are not appropriate initiators for MODE 4 operation.

In addition to "Loss of Offsite Power" initiator, three more initiating events were selected for evaluation in the Mode 4 PRA based on potential contribution to CDF. All four initiating events are listed below:

1. Loss of Offsite Power
2. Loss of RHR SDC Loop
3. Small Loss-of-Coolant Inventory
4. Loss of Service Water

In summary, based on the discussion above, we believe that the Mode 3 and Mode 4 PRA models include all initiating events that are potentially significant contributors to CDF.

10. The report contains conflicting statements regarding the performance of sensitivity studies to address the impact of uncertainties associated with certain IE frequencies. On page 4-6 it is stated that sensitivity studies were conducted to ensure that the conclusions are not sensitive to assumed IE frequencies. However, on page 4-9 it is stated that such sensitivity studies were not performed because the "factor increase in both models is the same." In addition, the staff does not agree with the latter statement In general, one would expect that a certain increase in an IE frequency (e.g., loss of offsite power) would impact the two models differently. This is due to the fact that some IEs are applicable to only one of the two modes. Also, in addition to causing a reactor trip, many IEs have an impact on accident mitigating systems, which can be different for the two models. Please discuss potential uncertainties associated with IE frequencies and, if necessary, perform sensitivity studies to assess the impact of such uncertainties on the conclusions of the analysis.

Response:

General discussion of sensitivity studies is provided in response to RAI 14. The following response focuses on the sensitivity of results on initiating event frequencies.

The statement "factor increase in both models is the same." only refers to the fact that if you double the initiating event frequency in the Mode 3 PRA, its CDF is doubled and likewise, if the Mode 4 initiating event frequency is doubled, its corresponding CDF is doubled. However, because of possible confusion it introduces, we will revise the report to delete this as the basis for not conducting the sensitivity study.

The impact of an initiating event (such as the loss of offsite power) on the mitigating systems is captured in the event tree model. The two dominant initiating events that contribute to core damage in both Modes 3 and 4 are the loss of offsite power and the loss of service water system. We believe that if the frequency of these initiators were to be higher for Mode 3, it would be higher by a similar amount for Mode 4. Similarly, if the frequency of these initiators were to be lower for Mode 3, it would be lower by a similar amount for Mode 4. Increasing these frequencies increases the difference between Mode 3 and Mode 4 CDF, making the justification stronger. Reducing the frequencies reduces the CDF difference, which is already a low value, less than 1%. Therefore, it can be concluded that the results and conclusions are not sensitive to the frequencies of the two dominant initiating events.

We will revise the report to remove the noted inconsistency and include the above discussion.

11 On page 4-7 it is stated that "[n]ew event trees were developed based on the success criteria developed for Modes 3 and 4." Please submit these event trees for staff review; including related top event descriptions and a brief discussion of success criteria and important modeling assumptions.

Response:

Success criteria tables developed for each of the accident initiators in Modes 3 & 4 are provided here. In addition, the accident event trees are also included along with the description of the event tree nodes. As an example, a detailed description of accident sequences has been provided for one of the event trees. The descriptions and the success criteria tables coupled with the general assumptions provided in Section 4.4.1 of NEDC-32988 provide all the basis for the accident event trees.

Success Criteria

Success criteria for the various safety functions were derived from the full-power PRA after accounting for the reduced decay heat levels in the shutdown modes. For instance, the CRD system was considered capable of providing adequate core cooling in Modes 3 and 4. Depressurization was considered necessary in Mode 3 to permit low-pressure injection. However, since the reactor is already depressurized in Mode 4, this function was not considered necessary. The number of safety/relief valves (SRVs) necessary to depressurize the reactor in Mode 3 is less than that needed at full power; however, it was judged that the number of SRVs was not a significant contributor to the depressurization function unavailability and Mode 3-specific success criteria were not developed.

Since the reactor was already shut down, no success criteria were needed for the reactivity control function.

Many systems are available for the core cooling function; however, the steam-driven RCIC and HPCI systems are available only in Mode 3. The CRD system also provides core cooling at high pressure. The LPCS, LPCI, Condensate Injection, SW Cross-tie and Firewater system can provide core cooling at low pressure. In Mode 3, the Power Conversion system, if available, can provide both the core cooling and containment heat removal functions.

The RHR system can provide the containment heat removal function in both Modes 3 and 4. RHR is also available in both the SPC and SDC modes. In case of a LOCA, the containment spray mode of the RHR system can more effectively remove the heat from the containment. If the RHR system is not available, the containment vent can provide the same capability. The venting action impacts the operation of pumps taking suction from the suppression pool and this has been accounted for in the PRA model.

Detailed success criteria for operating in the Mode 3 and Mode 4 plant states are presented in Tables 11-1 through 11-9.

Table 11-1: Success Criteria for Mode 3 - Loss of PCS Initiator

Core Cooling Function	Containment Heat Removal Function
1. Recovery of Power Conversion System	1. Recovery of Power Conversion System
2. RCIC or HPCI	2. (a) 1 of 4 RHR pumps in SPC mode (b) Containment venting + 2 CRD pumps (c) RPV Depressurization + 1of 4 RHR pumps in SDC mode (d) RPV Depressurization + Containment Venting + (Condensate Injection or 1 of 2 LPCS pumps with CST or 1 of 4 LPCI pumps with CST or Service Water Cross Tie or Firewater or 2 CRD pumps)
3. CRD (2 pumps)	3. (a) 1 of 4 RHR pumps in SPC mode (b) RPV Depressurization + 1of 4 RHR pumps in SDC mode (c) Containment Venting
4. RPV Depressurization with 3 SRVs + (Condensate Injection or Service Water Cross Tie or Firewater)	4. (a) 1 of 4 RHR pumps in SPC mode (b) 1of 4 RHR pumps in SDC mode (c) Containment Venting
5. RPV Depressurization with 3 SRVs + (1 of 2 LPCS pumps or 1 of 4 LPCI pumps)	5. (a) 1 of 4 RHR pumps in SPC mode (b) 1of 4 RHR pumps in SDC mode (c) Containment Venting + (Condensate Injection or 1 of 2 LPCS pumps with CST or 1 of 4 LPCI pumps with CST or Service Water Cross Tie or Firewater)

Table 11-2: Success Criteria for Mode 3 - Loss of Offsite Power Initiator

Core Cooling Function	Containment Heat Removal Function
1. Recovery of Offsite Power	1. Recovery of Offsite Power
2. RCIC or HPCI	2. (a) 1 of 4 RHR pumps in SPC mode (b) RPV Depressurization + 1of 4 RHR pumps in SDC mode (c) RPV Depressurization + Containment Venting + (1 of 2 LPCS pumps with CST or 1 of 4 LPCI pumps with CST or Service Water Cross Tie or Firewater or 2 CRD pumps) (d) Containment Venting + 2 CRD pumps
3. CRD (2 pumps)	3. (a) 1 of 4 RHR pumps in SPC mode (b) RPV Depressurization + 1of 4 RHR pumps in SDC mode (c) Containment Venting
4. RPV Depressurization with 3 SRVs + (Service Water Cross Tie or Firewater)	4. (a) 1 of 4 RHR pumps in SPC mode (b) 1of 4 RHR pumps in SDC mode (c) Containment Venting
5. RPV Depressurization with 3 SRVs + (1 of 2 LPCS pumps or 1 of 4 LPCI pumps)	5. (a) 1 of 4 RHR pumps in SPC mode (b) 1of 4 RHR pumps in SDC mode (c) Containment Venting + (1 of 2 LPCS pumps with CST or 1 of 4 LPCI pumps with CST or Service Water Cross Tie or Firewater)

Table 11-3: Success Criteria for Mode 3 - Station Blackout Initiator

Core Cooling Function	Containment Heat Removal Function
1. (RCIC or HPCI) +/or RPV Depressurization with 3 SRVs + Firewater)	Containment Venting

Table 11-4: Success Criteria for Mode 3 - Small LOCA Initiator

Core Cooling Function	Containment Heat Removal Function
1. Power Conversion System (PCS)	1. (a) 1 of 4 RHR pumps in SPC mode (b) RPV Depressurization + Drywell Spray (c) Containment Venting
2. HPCI or RCIC	2. (a) 1 of 4 RHR pumps in SPC mode (b) (Drywell Spray or Containment Venting) + 2 CRD pumps (c) RPV Depressurization + Drywell Spray (Condensate Injection or 1 of 2 LPCS pumps or 1 of 4 LPCI pumps or Service Water Cross Tie or Firewater) (d) RPV Depressurization + Containment Venting +(Condensate Injection or 1of 2 LPCS pumps with CST or 1 of 4 LPCI pumps with CST or Service Water Cross Tie or Firewater)
3. RPV Depressurization with 3 SRVs + (1 of 2 LPCS pumps or 1 of 4 LPCI pumps)	3. (a) 1 of 4 RHR pumps in SPC mode (b) Drywell Spray (c) Containment Venting + (Condensate Injection or 1 of 2 LPCS pumps with CST or 1 of 4 LPCI pumps with CST or Service Water Cross Tie or Firewater)
4. RPV Depressurization with 3 SRVs + (Condensate Injection or Service Water Cross Tie or Firewater)	4. (a) 1 of 4 RHR pumps in SPC mode (b) Drywell Spray (c) Containment Venting

Table 11-5: Success Criteria for Mode 3 - Loss of Service Water Initiator

Core Cooling Function	Containment Heat Removal Function
1. RPV Depressurization with 3 SRVs + (1 of 2 LPCS pumps with CST or 1 of 4 LPCI pumps with CST or Condensate Injection or Firewater)	1. Containment Venting

Table 11-6: Success Criteria for Mode 4 - Loss of Offsite Power Initiator

Core Cooling Function	Containment Heat Removal Function
1. Recovery of Offsite Power	1. Recovery of Offsite Power
2. Onsite Emergency AC Power + (2 CRD pumps or 1 of 2 LPCS pumps or 1 of 4 LPCI pumps or Service Water Cross Tie or Firewater)	2. 1 of 4 RHR pumps in SDC mode
3. Onsite Emergency AC Power + (2 CRD pumps or 1 of 2 LPCS pumps with CST or 1 of 4 LPCI pumps with CST or Service Water Cross Tie or Firewater)	3. Containment Venting

Table 11-7: Success Criteria for Mode 4 - Small Loss of Coolant Inventory Initiator

Core Cooling Function	Containment Heat Removal Function
1. 1 of 2 LPCS pumps or 1 of 4 LPCI pumps	1. (a) 1 of 4 RHR pumps in SPC mode (b) 1 of 4 RHR pumps in SDC mode (c) Containment Venting + (Condensate Injection or 1 of 2 LPCS pumps with CST or 1 of 4 LPCI pumps with CST or Service Water Cross Tie or Firewater)
2. Condensate Injection or Service Water Cross Tie or Firewater	2. (a) 1 of 4 RHR pumps in SPC mode (b) 1 of 4 RHR pumps in SDC mode (c) Containment Venting + (Condensate Injection or 1 of 2 LPCS pumps with CST or 1 of 4 LPCI pumps with CST or Service Water Cross Tie or Firewater)

Table 11-8: Success Criteria for Mode 4 - Loss of One RHR Loop in SDC Mode Initiator

Core Cooling Function	Containment Heat Removal Function
1. Recovery of failed RHR Loop-I or RHR Loop-II Operational.	1. Recovery of failed RHR Loop-I or RHR Loop-II Operational.
2. CRD (2 pumps) or 1 of 2 LPCS pumps or 1 of 4 LPCI pumps or Condensate Injection or Service Water Cross Tie or Firewater	2. RHR Loop-II SPC Mode
3. CRD (2 pumps) or 1 of 2 LPCS pumps with CST or 1 of 4 LPCI pumps with CST or Condensate Injection or Service Water Cross Tie or Firewater	3. Containment Venting

Table 11-9: Success Criteria for Mode 4 - Loss of Service Water Initiator

Core Cooling Function	Containment Heat Removal Function
1. 1 of 2 LPCS pumps with CST or 1 of 4 LPCI pumps with CST or Condensate Injection or Firewater	1. Containment Venting

Accident Event Trees

New event trees were developed based on the success criteria for the Modes 3 and 4 plant states. The trees are generally simpler than their counterparts for the full-power PRA because of the absence of ATWS events in both modes and the lack of a need for depressurization in Mode 4. The dependence of core cooling systems taking suction from the suppression pool on the loss of RHR function and subsequent venting has been modeled based on the full-power PRA. The event trees have the following initiating events:

Mode 3:
- Loss of offsite power
- Small LOCA
- Loss of power conversion system
- Loss of service water

Mode 4:
- Loss of offsite power
- Small loss of coolant inventory
- Loss of one RHR SDC loop
- Loss of service water

Each event tree is described in the following subsections. The event tree figures are also presented. As an example, a detailed description of an accident event sequence is provided for the first one of the 8 event trees (Mode 3 Loss of Offsite Power).

Event Tree 1: Mode 3 Loss of Offsite Power Event Tree

Figures 11-1.1 to 11-1.8 display the event tree for the Loss of Offsite Power initiator. The following discussions define the event tree headings and describe the sequences presented.

The following event tree headings appear on the tree in the approximate chronological order that would be expected following a Loss of Offsite Power.

M3T1:	Initiating event. Loss of Offsite Power in Mode 3.
REC2:	Failure to recover offsite power.
B:	Failure of the onsite emergency AC power system.
U2:	Failure of the RCIC system. Success implies operation of the RCIC pump train so as to maintain sufficient coolant injection.
U1:	Failure of the HPCI system. Success implies operation of the HPCI pump train so as to maintain sufficient coolant injection.
U3:	Failure of the Control Rod Drive (CRD) system as an injection source. Success implies two pump operation.
X1:	Failure of RPV Depressurization. Success implies automatic or manual operation of at least 3 SRVs to allow low pressure coolant injection.
X2:	Failure of manual RPV depressurization.
V2:	Failure of LPCS. Success implies at least one of two LPCS pumps is operating with the suppression pool as the water source.
V2_1:	Failure of LPCS. Success implies operation of either of the two LPCS pumps with CST as the water source*.
V3:	Failure of LPCI. Success implies at least one of four LPCI pumps is operating with the suppression pool as the water source.
V3_1:	Failure of LPCI. Success implies operation of one of the four LPCI pumps with CST as the water source*.
V4:	Failure of Service Water (SW) system in the injection mode to the reactor vessel through a LPCI injection line. Success implies manual operation of this injection source such that one SW pump successfully provides coolant to the reactor.
FW:	Failure of Firewater (FW) system. Success implies at least one FW pump (diesel or motor-driven) starts operating within 2 to 8 hours.
FW1:	Failure of Firewater system. Success implies at least one FW pump (diesel or motor-driven) starts operating within 2 hours.
W1:	Failure of RHR in suppression pool cooling (SPC) mode. Success implies at least one of four RHR pumps operating in SPC mode with the appropriate heat exchanger in the loop along with SW system in operation to the ultimate heat sink.

* Injection from the Condensate Storage Tank (CST) only.

W2: Failure of RHR in shutdown cooling (SDC) mode. Success implies at least one of four RHR pumps operate in SDC mode.

Y1: Failure of Containment Venting. Success implies the vent line is open so as to prevent containment failure by overpressure.

The following descriptions refer to the sequences found in the figures. A slash preceding the event symbol indicates success of the event.

Sequence M3T1-1 -- M3T1*REC2*/B*/U2*W1*/X2*W2*/Y1*U3*V2_1*V3_1*V4*FW

As a consequence of Loss of Offsite Power in Mode 3 (M3T1), the PCS is lost. The Condensate system ceases to provide water to the RPV, causing water level to decrease. The recovery of offsite power fails (REC2). The onsite emergency AC power system succeeds (/B). Core coolant is provided by RCIC (/U2). Steam relief from the SRVs to the suppression pool will cause suppression pool heat up. When the suppression pool temperature reaches 95°F, EOPs direct the operator to initiate the suppression pool cooling (SPC) mode of the Residual Heat Removal System (RHR). Containment heat removal by means of the RHR in SPC mode fails (W1). The operator is directed by the EOPs to depressurize the reactor vessel to establish the shutdown-cooling (SDC) mode of RHR. Manual RPV depressurization succeeds (/X2). During depressurization, RCIC trips on low steam supply pressure. Containment heat removal by means of the RHR in shutdown cooling (SDC) mode fails (W2). The containment continues to heat up and pressurize, jeopardizing containment integrity. Containment venting succeeds (/Y1). Containment venting leads to loss of net positive suction head (NPSH) of pumps taking suction from the suppression pool. Therefore, the core is vulnerable to damage if coolant injection cannot be provided by other systems[1] such as CRD, LPCS, LPCI, SW cross-tie, or Firewater, taking suction from external sources of water. In this sequence, such coolant injection fails (U3, V2_1, V3_1, V4, and FW). Therefore, core damage is expected.

Sequence M3T1-2 -- M3T1*REC2*/B*/U2*W1*/X2*W2*Y1

This sequence is similar to Sequence M3T1-1, except containment venting fails (Y1), so pressure rise in containment is unalleviated. The consequence of subsequent containment failure on core cooling has not been evaluated in detail. Containment failure can adversely affect the operation of any coolant injection system by introducing harsh environments along the containment failure points, which challenges the continued operation of mitigating components. Conservatively, it is assumed that containment failure indirectly leads to core damage.

Sequence M3T1-3 -- M3T1*REC2*/B*/U2*W1*X2*/U3*Y1

This sequence is similar to Sequence M3T1-2. Core coolant is provided by RCIC (/U2). Containment heat removal is not achieved. Manual depressurization fails (X2). Although CRD injection succeeds (/U3), containment venting fails (Y1). Therefore, pressure rise in containment

[1] For the Loss of Offsite Power event sequences with failure to recover offsite power (REC2), no credit is taken for the Condensate pumps and their associated booster pumps as a low pressure injection source because it is not included as a design basis diesel generator load Manual transfer of these loads to the diesel generator is not considered.

is unalleviated. The consequence of subsequent containment failure on continued core cooling has not been evaluated in detail. Containment failure can adversely affect the operation of coolant injection systems by introducing harsh environments along the containment failure points, which challenges the continued operation of mitigating components. Conservatively, it is assumed that core cooling will be lost, leading to core damage.

Sequence M3T1-4 -- M3T1*REC2*/B*/U2*W1*X2*U3

This sequence is similar to Sequence M3T1-3. Core coolant is provided by RCIC (/U2), but containment heat removal is not achieved. Manual depressurization fails (X2) and CRD injection fails (U3). The suppression pool temperature continues to increase and when it reaches approximately 200°F, the RCIC pump turbine lube oil system is challenged, since RCIC is taking suction from the suppression pool. Core damage is expected following RCIC failure.

Sequence M3T1-5 -- M3T1*REC2*/B*U2*/U1*W1*/X2*W2*/Y1*U3*V2_1*V3_1*V4*FW

This sequence is the same as Sequence M3T1-1, except HPCI (/U1) rather than RCIC (/U2) is used for water make-up. Core damage is expected for the same reason.

Sequence M3T1-6 -- M3T1*REC2*/B* U2*/U1*W1*/X2*W2*Y1

This sequence is the same as Sequence M3T1-2, except HPCI (/U1) rather than RCIC (/U2) is used for water make-up. Core damage is expected for the same reason.

Sequence M3T1-7 -- M3T1*REC2*/B* U2*/U1*W1*X2*/U3*Y1

This sequence is the same as Sequence M3T1-3, except HPCI (/U1) rather than RCIC (/U2) is used for water make-up. Core damage is expected for the same reason.

Sequence M3T1-8 -- M3T1*REC2*/B* U2*/U1*W1*X2*U3

This sequence is the same as Sequence M3T1-4, except HPCI (/U1) rather than RCIC (/U2) is used for water make-up. The HPCI pump, when taking suction from the suppression pool, is also susceptible to turbine lube oil system failure when the suppression pool temperature reaches 200°F. Core damage is expected following HPCI failure.

Sequence M3T1-9 -- M3T1*REC2*/B*U2*U1*/U3*W1*/X2*W2*Y1

This sequence is the same as Sequence M3T1-2, except RCIC and HPCI fail (U2 and U1), and core coolant is provided by CRD in the two pump maximized flow mode (/U3). Containment venting fails (Y1). The consequence of subsequent containment failure on continued core cooling has not been evaluated in detail. Conservatively, it is assumed that core cooling will be lost, leading to core damage.

Sequence M3T1-10 -- M3T1*REC2*/B*U2*U1*/U3*W1*X2*Y1

This sequence is the same as M3T1-9, except manual depressurization fails (X2). Containment venting fails (Y1). The consequence of subsequent containment failure on continued core

cooling by the CRD system has not been evaluated in detail. Conservatively, it is assumed that core cooling will be lost, leading to core damage.

Sequence M3T1-11 --
M3T1*REC2*/B*U2*U1*U3*/X1*/V2*W1*W2*/Y1*V2_1*V3_1*V4*FW

Following Loss of Offsite Power in Mode 3 (M3T1), the recovery of offsite power fails (REC2). The onsite emergency AC power system succeeds (/B). RCIC, HPCI and CRD fail (U2, U1 and U3). The vessel level is expected to decrease. When the vessel level decreases to the top of active fuel (TAF), EOPs direct the operator to open all the ADS valves (if they have not already opened automatically). In this sequence, RPV depressurization succeeds (/X1) and LPCS succeeds (/V2). Steam relief from the SRVs to the suppression pool will cause suppression pool heat up. When the suppression pool temperature reaches 95°F, EOPs direct the operator to initiate the suppression pool cooling (SPC) mode of the Residual Heat Removal System (RHR). Containment heat removal by means of the RHR in SPC mode fails (W1). Containment heat removal by means of the RHR in shutdown cooling (SDC) mode fails (W2). The containment continues to heat up and pressurize, jeopardizing containment integrity. Containment venting succeeds (/Y1). Containment venting leads to loss of net positive suction head (NPSH) of pumps taking suction from the suppression pool. Therefore, LPCS is expected to be lost, and the core is vulnerable to damage if coolant injection cannot be provided by other systems taking suction from external sources of water. Coolant injection from other systems fails (V2_1, V3_1, V4, and FW). Therefore, core damage is expected.

Sequence M3T1-12 -- M3T1*REC2*/B*U2*U1*U3*/X1*/V2*W1*W2*Y1

This sequence is similar to Sequence M3T1-11, except containment venting fails (Y1), so pressure rise in containment is unalleviated. The consequence of subsequent containment failure on core cooling has not been evaluated in detail. Containment failure can adversely affect the operation of any coolant injection system by introducing harsh environments along the containment failure points, which challenges the continued operation of mitigating components. Conservatively, it is assumed that containment failure indirectly leads to core damage.

Sequence M3T1-13 --
M3T1*REC2*/B*U2*U1*U3*/X1*V2*/V3*W1*W2*/Y1*V3_1*V4*FW

This sequence is similar to Sequence M3T1-11, except LPCI (/V3) rather than LPCS (/V2) is used for water make-up. Following successful containment venting (/Y1), LPCI with suction from the suppression pool is expected to be lost due to loss of NPSH. Coolant injection from other systems taking suction from external sources of water fails (V3_1, V4, and FW). Therefore, core damage is expected.

Sequence M3T1-14 -- M3T1*REC2*/B*U2*U1*U3*/X1*V2*/V3*W1*W2*Y1

This sequence is similar to Sequence M3T1-13, except containment venting fails (Y1). The consequence of subsequent containment failure on core cooling has not been evaluated in detail. Containment failure can adversely affect the operation of any coolant injection system by introducing harsh environments along the containment failure points, which challenges the continued operation of mitigating components. Conservatively, it is assumed that containment

failure indirectly leads to core damage.

Sequence M3T1-15 -- M3T1*REC2*/B*U2*U1*U3*/X1*V2*V3*/V4*W1*W2*Y1

This sequence is similar to Sequence M3T1-14, except Service Water cross-tie[2] (/V4) rather than LPCI is used for water make-up. Core damage is expected for the same reasons.

Sequence M3T1-16 -- M3T1*REC2*/B*U2*U1*U3*/X1*V2*V3*V4*/FW*W1*W2*Y1

This sequence is similar to Sequence M3T1-15, except Firewater (/FW) rather than Service Water cross-tie is used for water make-up. Core damage is expected for the same reasons.

Sequence M3T1-17 -- M3T1*REC2*/B*U2*U1*U3*/X1*V2*V3*V4*FW

Following Loss of Offsite Power in Mode 3 (M3T1), the recovery of offsite power fails (REC2). The onsite emergency AC power system succeeds (/B). In this sequence, all the high pressure water make-up systems fail (U2, U1, U3). RPV depressurization succeeds (/X1), enabling low pressure injection. However, Firewater and all other low pressure core cooling systems fail and core damage is expected.

Sequence M3T1-18 -- M3T1*REC2*/B*U2*U1*U3*X1

Following Loss of Offsite Power in Mode 3 (M3T1), the recovery of offsite power fails (REC2). The onsite emergency AC power system succeeds (/B). In this sequence, all the high pressure water make-up systems fail (U2, U1, U3), and RPV depressurization fails (X1) also. Low pressure core cooling systems cannot operate since the rector is at high pressure. Therefore, core cooling is lost and core damage is expected.

Sequence M3T1-19 -- M3T1*REC2*B*/U2*/X1*/FW*Y1

Following Loss of Offsite Power in Mode 3 (M3T1), the recovery of offsite power fails (REC2). The onsite emergency AC power system fails (B). This results in a station blackout event. In this sequence, RCIC succeeds (/U2). However, in station blackout conditions, RCIC operation will eventually fail as a result of one or more possible effects[3]. RPV depressurization succeeds (/X1) and Firewater succeeds (/FW). Containment venting fails (Y1), so pressure rise in containment is unalleviated. Core damage is expected indirectly due to containment failure.

Sequence M3T1-20 -- M3T1*REC2*B*/U2*/X1*FW

This sequence is similar to Sequence M3T1-19, but Firewater fails (FW). Core damage is expected due to lack of core cooling.

Sequence M3T1-21 -- M3T1*REC2*B*/U2*X1

[2] Service Water system in the injection mode to the reactor vessel through a LPCI injection line.
[3] For station blackout, RCIC or HPCI operation will eventually fail as a result of one or more possible effects. These effects include 1) high turbine exhaust pressure, 2) depletion of battery power, 3) high room temperature, and/or 4) low steam pressure when depressurization occurs to follow HCTL requirements.

Following Loss of Offsite Power in Mode 3 (M3T1), the recovery of offsite power fails (REC2). The onsite emergency AC power system fails (B). This results in a station blackout event. Core cooling is provided by RCIC (/U2). However, for station blackout, RCIC operation will eventually fail. In this sequence, RPV depressurization fails (X1). Therefore, the core cooling is not maintained and core damage is expected.

Sequence M3T1-22 -- M3T1*REC2*B*U2*/U1*/X1*/FW*Y1

This sequence is the same as Sequence M3T1-19, except HPCI (/U1) rather than RCIC is used for water make-up. For station blackout, HPCI operation will eventually fail. Although Firewater system succeeds (/FW), containment venting fails (Y1). Therefore, pressure rise in containment is unalleviated. Core damage is expected indirectly due to containment failure.

Sequence M3T1-23 -- M3T1*REC2*B*U2*/U1*/X1*FW

This sequence is the same as Sequence M3T1-20, except HPCI (/U1) rather than RCIC is used for water make-up. For station blackout, HPCI operation will eventually fail. Although depressurization succeeds (/X1), the Firewater system fails (FW). The core is vulnerable to damage since coolant injection is not provided. Core damage is expected.

Sequence M3T1-24 -- M3T1*REC2*B*U2*/U1*X1

Sequence M3T1-24 is the same as Sequence M3T1-21, except HPCI (/U1) rather than RCIC is used for water make-up. For station blackout, HPCI operation will eventually fail. RPV depressurization fails (X1). Therefore, the core cooling is not maintained and core damage is expected.

Sequence M3T1-25 -- M3T1*REC2*B*U2*U1*/X1*/FW1*Y1

Following Loss of Offsite Power in Mode 3 (M3T1), the recovery of offsite power fails (REC2). The onsite emergency AC power system fails (B). In this sequence, RCIC fails (U2) and HPCI fails (U1). However, RPV depressurization succeeds (/X1) and Firewater succeeds within 2 hours (/FW1). Containment venting fails (Y1), so pressure rise in containment is unalleviated and core damage is expected indirectly due to containment failure.

Sequence M3T1-26 -- M3T1*REC2*B*U2*U1*/X1*FW1

This sequence is the similar to Sequence M3T1-25. Following Loss of Offsite Power in Mode 3 (M3T1), the recovery of offsite power fails (REC2). The onsite emergency AC power system fails (B). This results in a station blackout event. In this sequence, RCIC fails (U2) and HPCI fails (U1). Although RPV depressurization succeeds (/X1), Firewater injection cannot be established within 2 hours (FW1). The core is vulnerable to damage since coolant injection is not provided. Core damage is expected.

Sequence M3T1-27 -- M3T1*REC2*B*U2*U1*X1

Following Loss of Offsite Power in Mode 3 (M3T1), the recovery of offsite power fails (REC2). The onsite emergency AC power system fails (B). This results in a station blackout event. In

this sequence, RCIC fails (U2) and HPCI fails (U1). RPV depressurization fails (X1) and low pressure coolant make-up is not possible. Without coolant make-up, the core cooling is not maintained and core damage is expected.

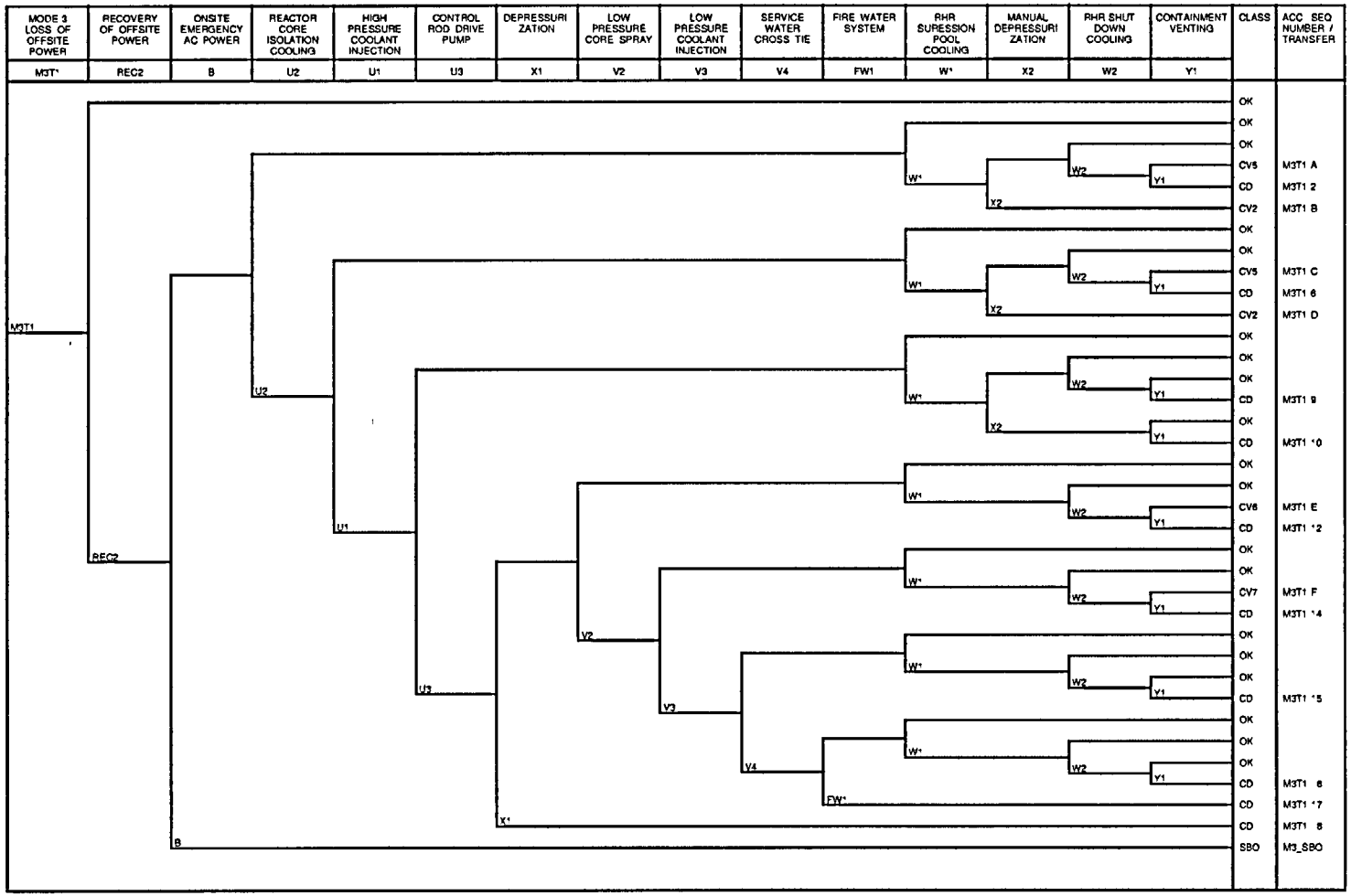

Figure 11-1.1: Mode 3 Loss of Offsite Power Event Tree

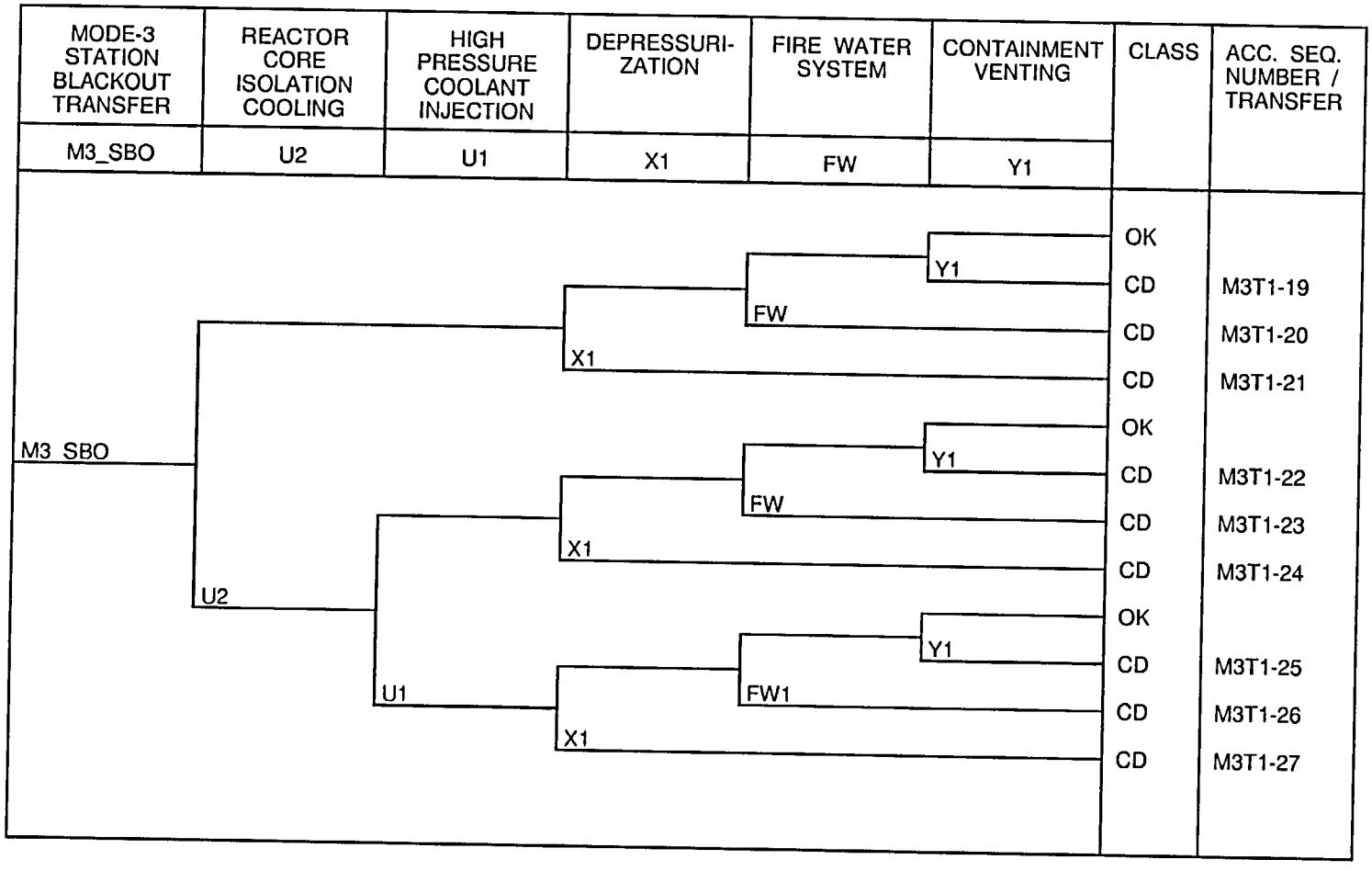

Figure 11-1.2: Mode 3 Station Blackout

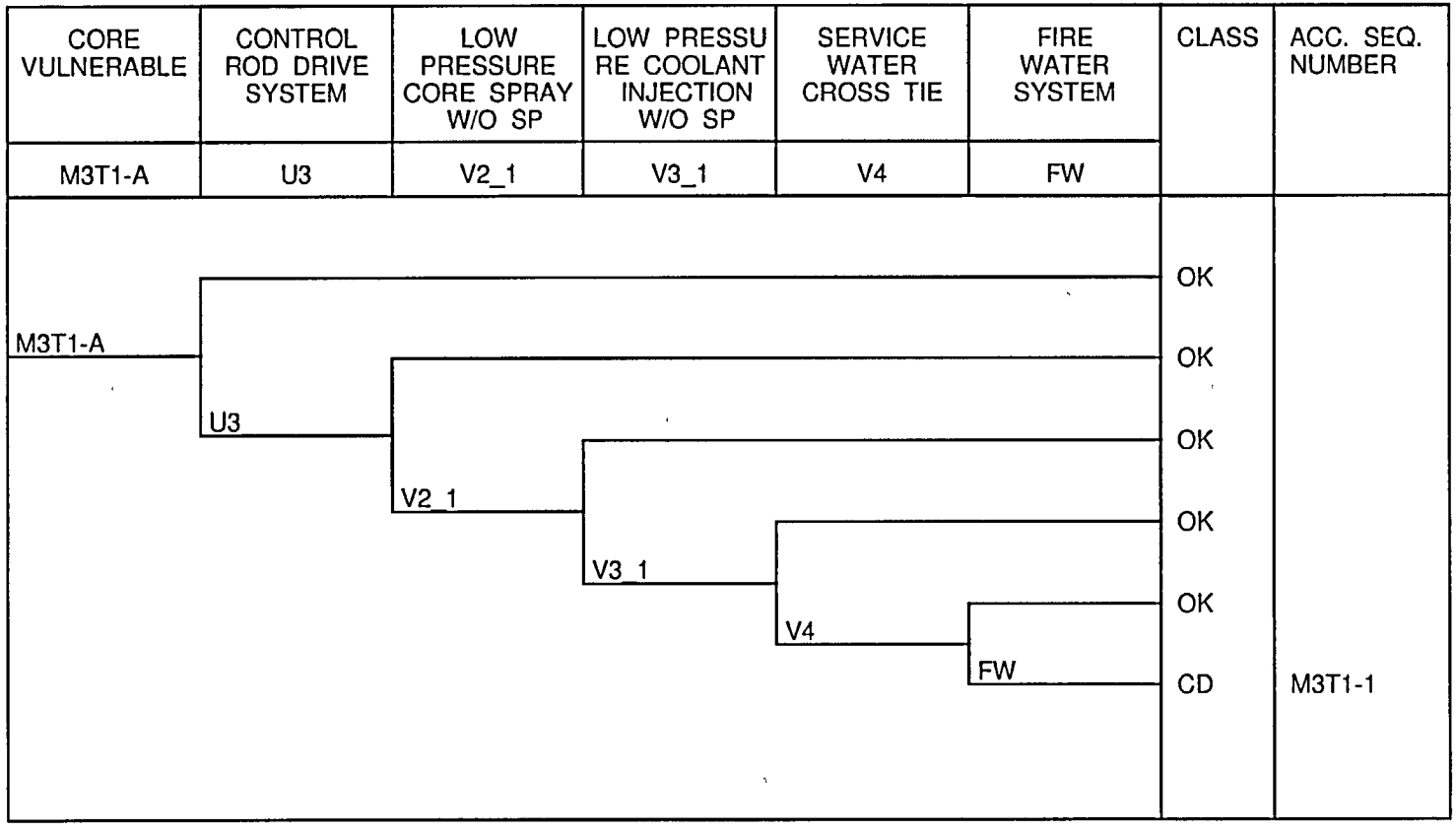

Figure 11-1.3: Core Vulnerable Sequence Group 5 for M3T1-A

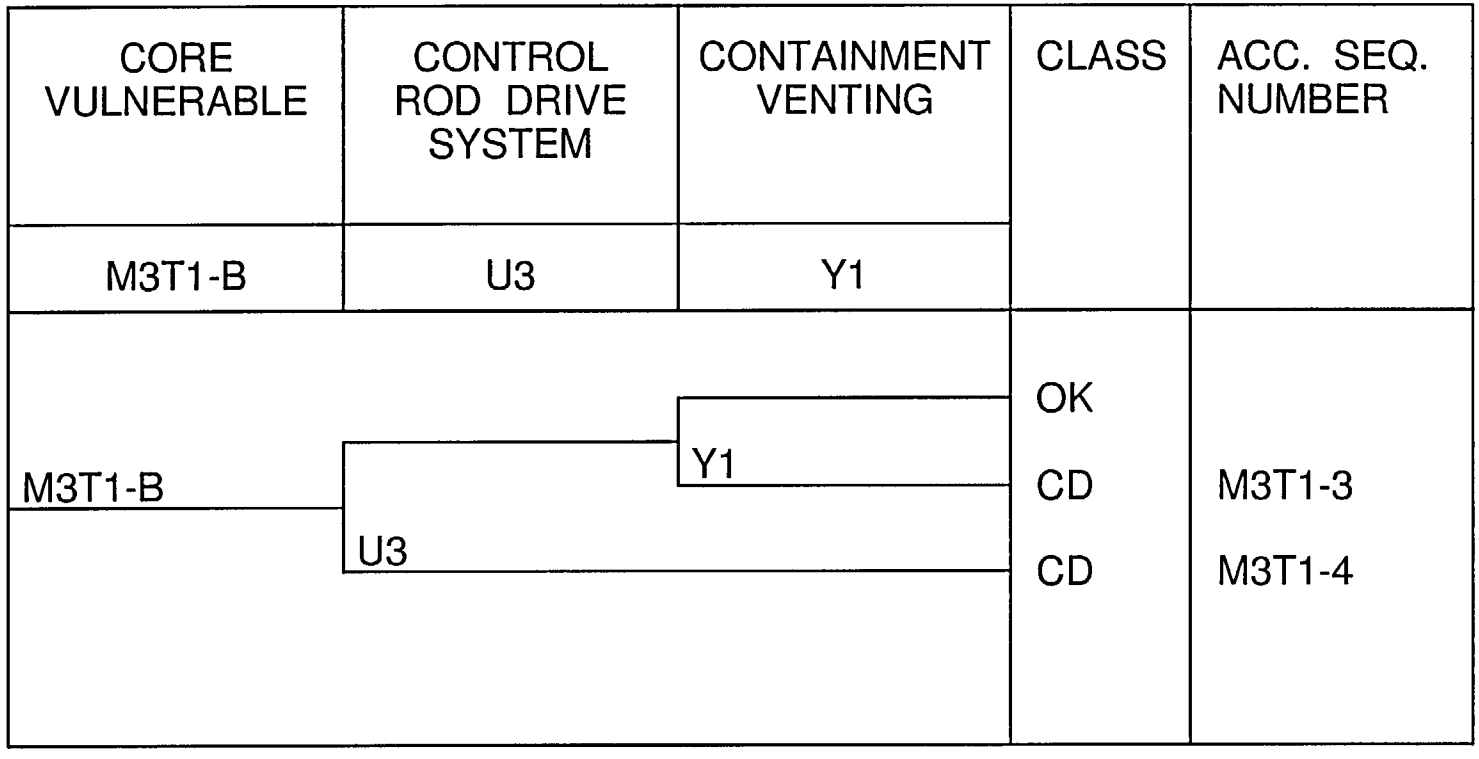

Figure 11-1.4: Core Vulnerable Sequence Group 2 for M3T1-B

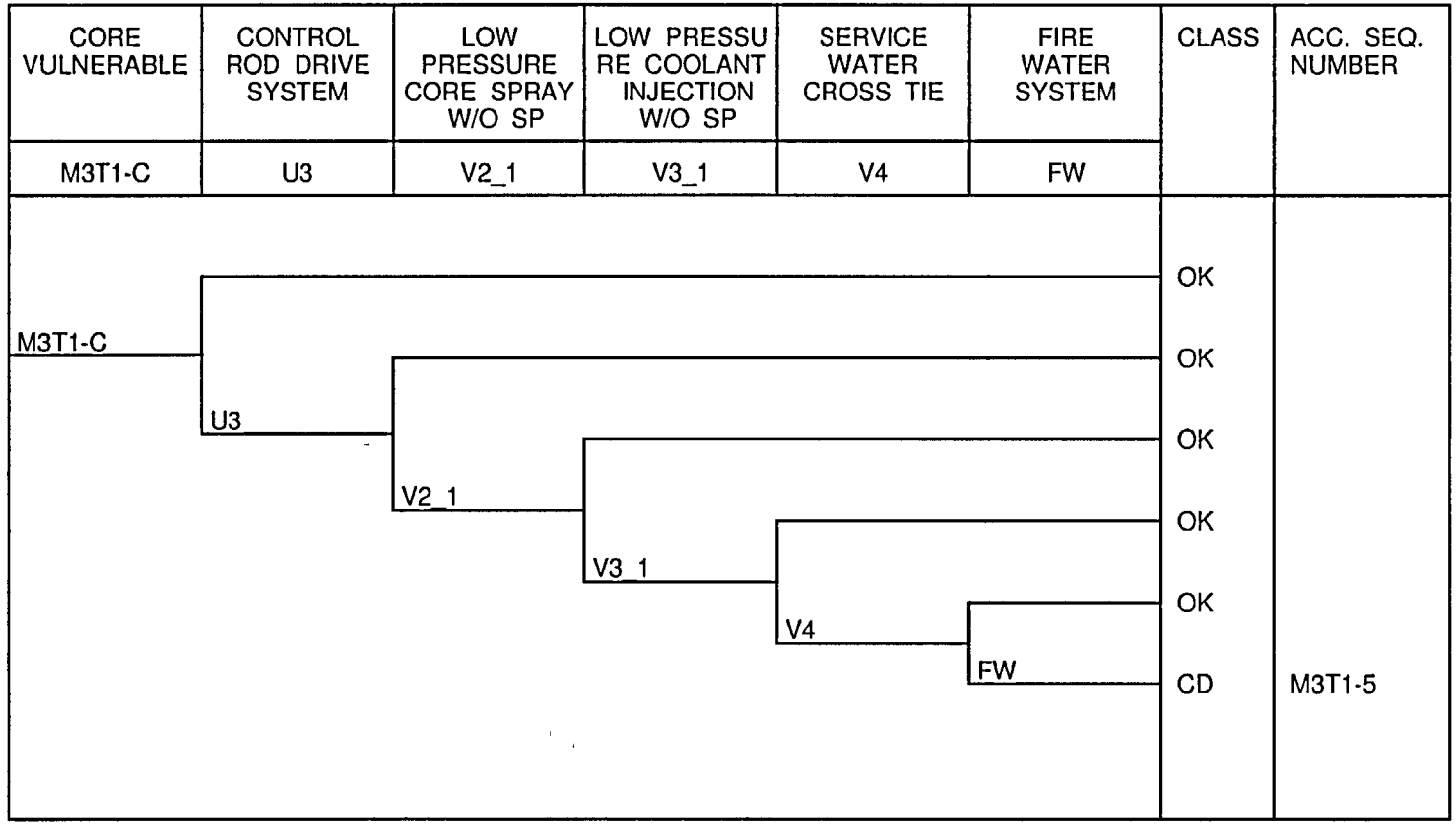

Figure 11-1.5: Core Vulnerable Sequence Group 5 for M3T1-C

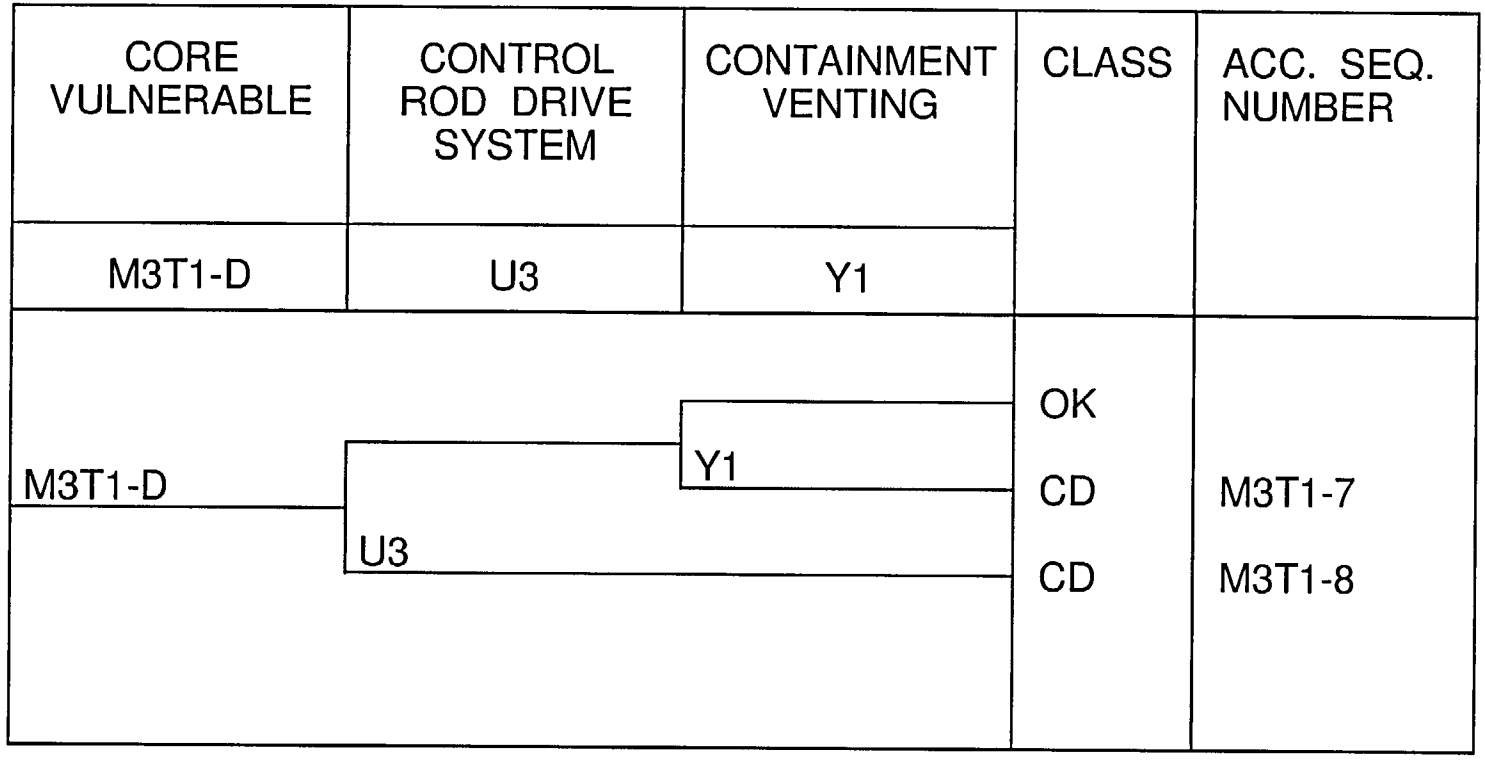

Figure 11-1.6: Core Vulnerable Sequence Group 2 for M3T1-D

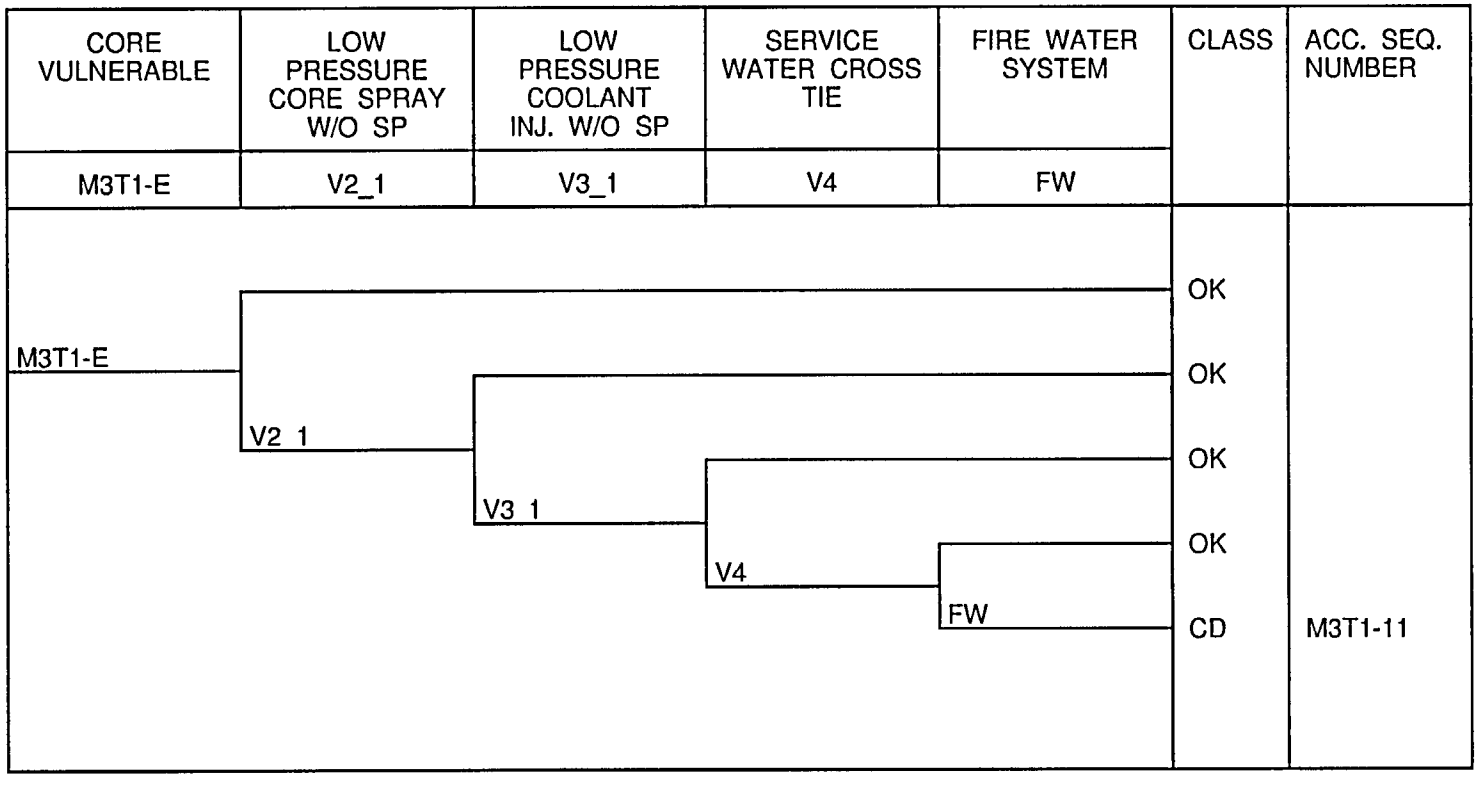

Figure 11-1.7: Core Vulnerable Sequence Group 6 for M3T1-E

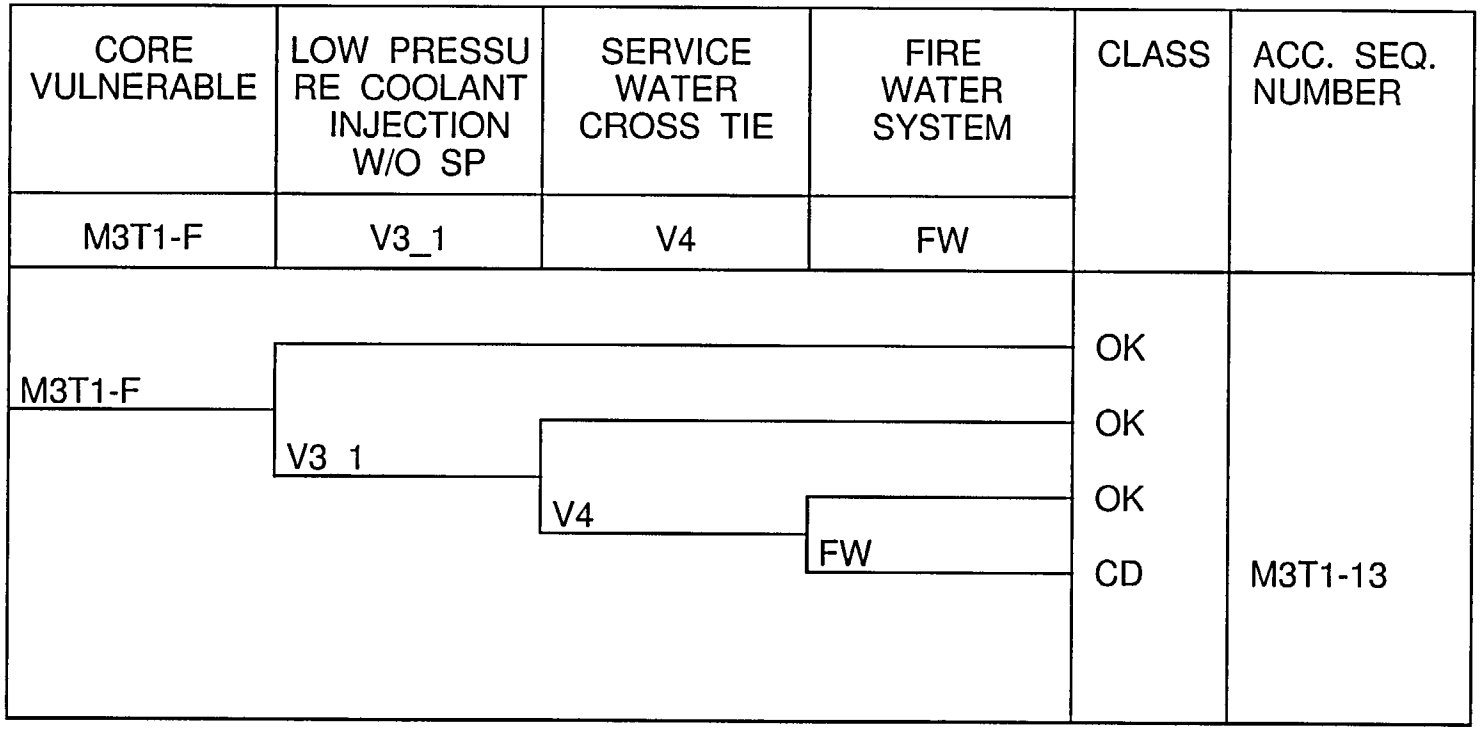

Figure 11-1.8: Core Vulnerable Sequence Group 7 for M3T1-F

Event Tree 2: Mode 3 Small LOCA Event Tree

Figures 11-2.1 to 11-2.7 display the event tree for the small LOCA initiator.

The following event tree headings appear on the tree.

M3S2:	Initiating event. Small LOCA in Mode 3.
Q:	Failure of the Power Conversion System (PCS).
U1:	Failure of the HPCI system. Success implies operation of the HPCI pump train so as to maintain sufficient coolant injection.
U2:	Failure of the RCIC system. Success implies operation of the RCIC pump train so as to maintain sufficient coolant injection.
U3:	Failure of the CRD system as an injection source. Success implies two pump operation.
X1:	Failure of RPV Depressurization. Success implies automatic or manual operation of at least 3 SRVs to allow low pressure coolant injection.
X2:	Failure of manual RPV depressurization.
V1:	Failure of Condensate Injection.
V2:	Failure of LPCS. Success implies at least one of two LPCS pumps is operating with the suppression pool as the water source.
V2_1:	Failure of LPCS. Success implies operation of either of the two LPCS pumps with CST as the water source*.
V3:	Failure of LPCI. Success implies at least one of four LPCI pumps is operating with the suppression pool as the water source.
V3_1:	Failure of LPCI. Success implies operation of one of the four LPCI pumps with CST as the water source*.
V4:	Failure of Service Water (SW) system in the injection mode to the reactor vessel through a LPCI injection line. Success implies manual operation of this injection source such that one SW pump successfully provides coolant to the reactor.
FW:	Failure of Firewater (FW) System. Success implies at least one FW pump (diesel or motor-driven) starts operating within 2 to 8 hours.
FW1:	Failure of Firewater System. Success implies at least one FW pump

* Injection from the Condensate Storage Tank (CST) only.

(diesel or motor-driven) starts operating within 2 hours.

W1: Failure of RHR in suppression pool cooling (SPC) mode. Success implies at least one of four RHR pumps operating in SPC mode with the appropriate heat exchanger in the loop along with SW system in operation to the ultimate heat sink.

W3: Failure of RHR drywell spray.

Y1: Failure of Containment Venting. Success implies the vent line is open so as to prevent containment failure by overpressure.

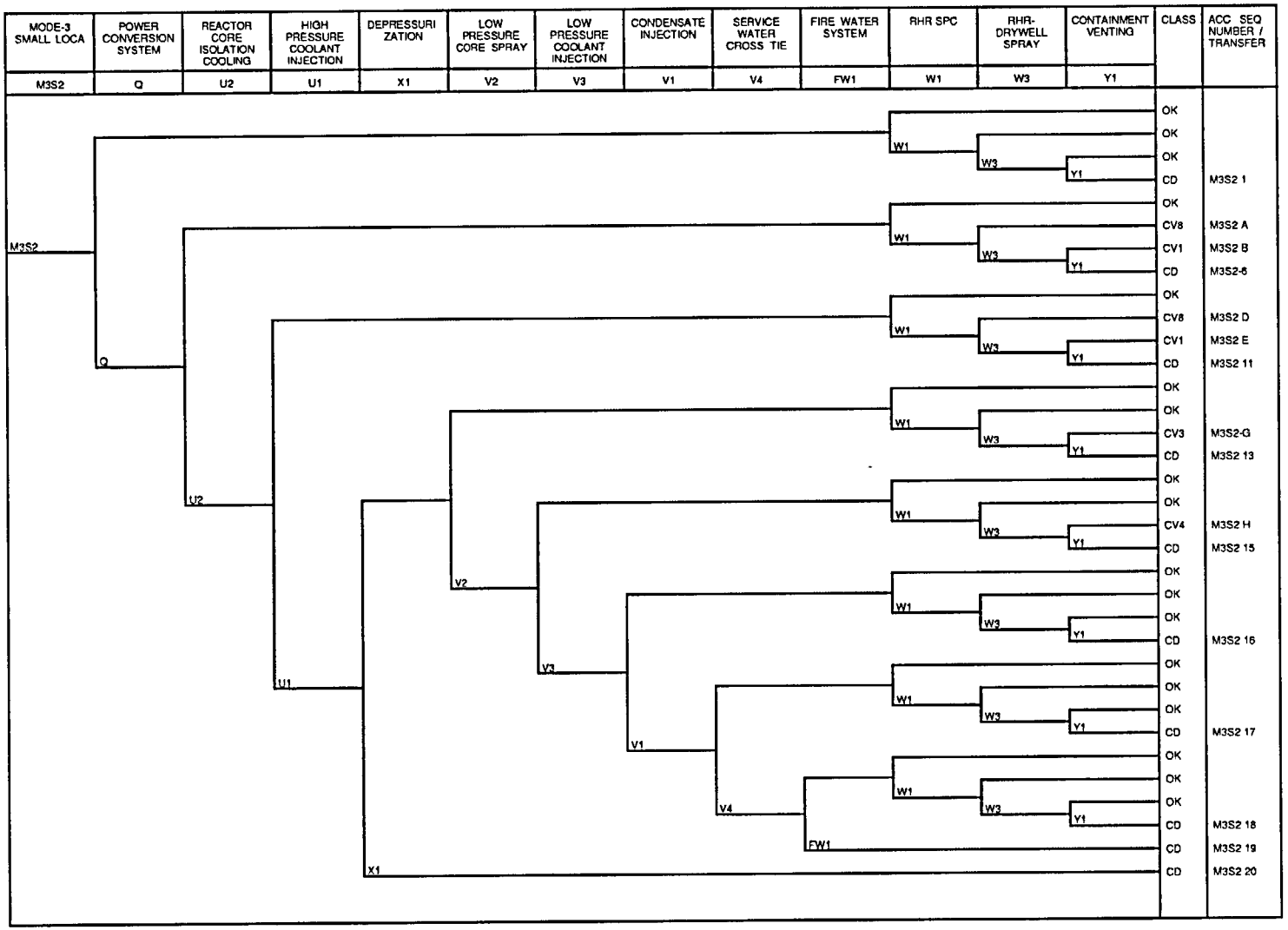

Figure 11-2.1: Mode 3 Small Loss of Coolant Accident Event Tree

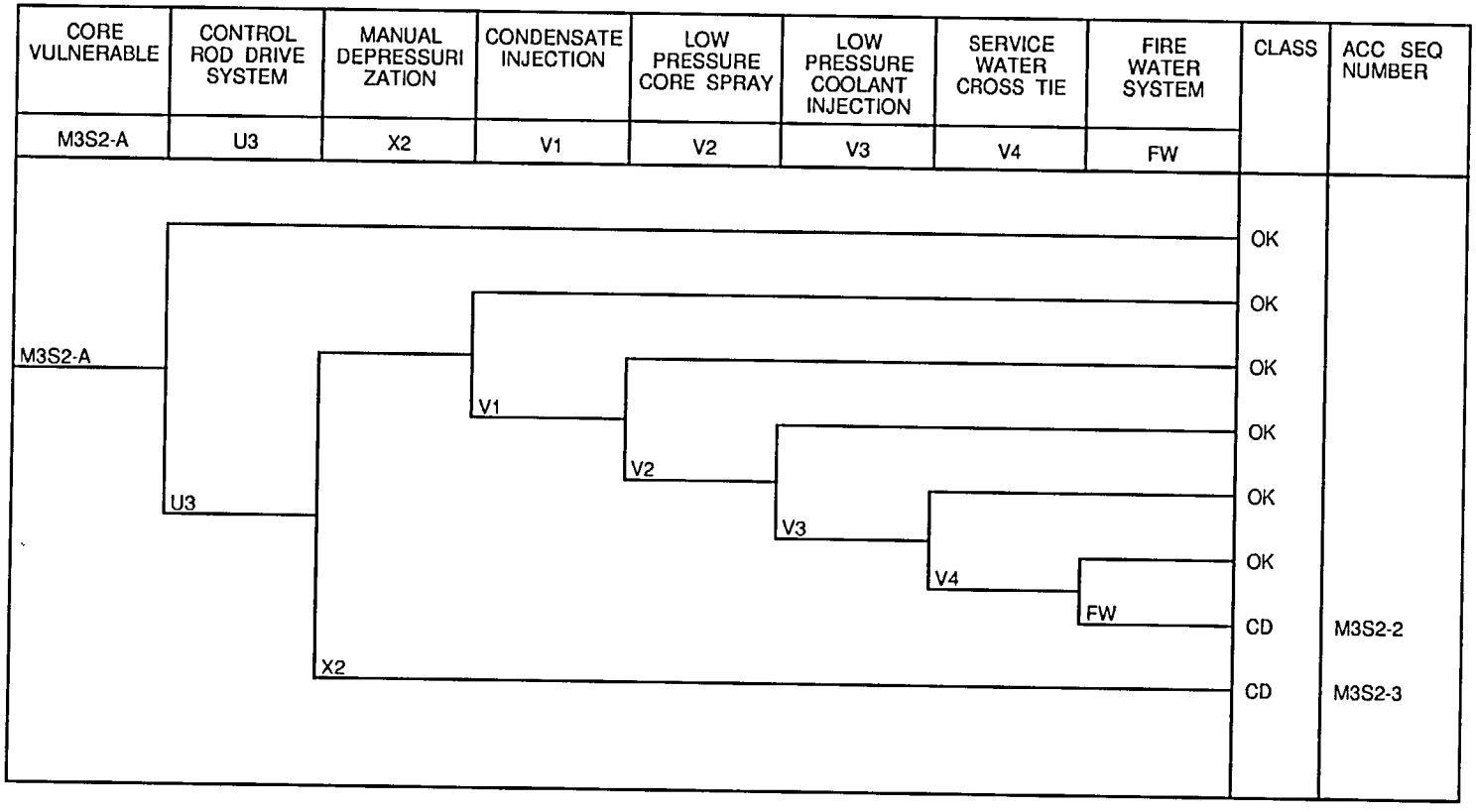

Figure 11-2.2: Core Vulnerable Sequence Group 8 for M3S2-A

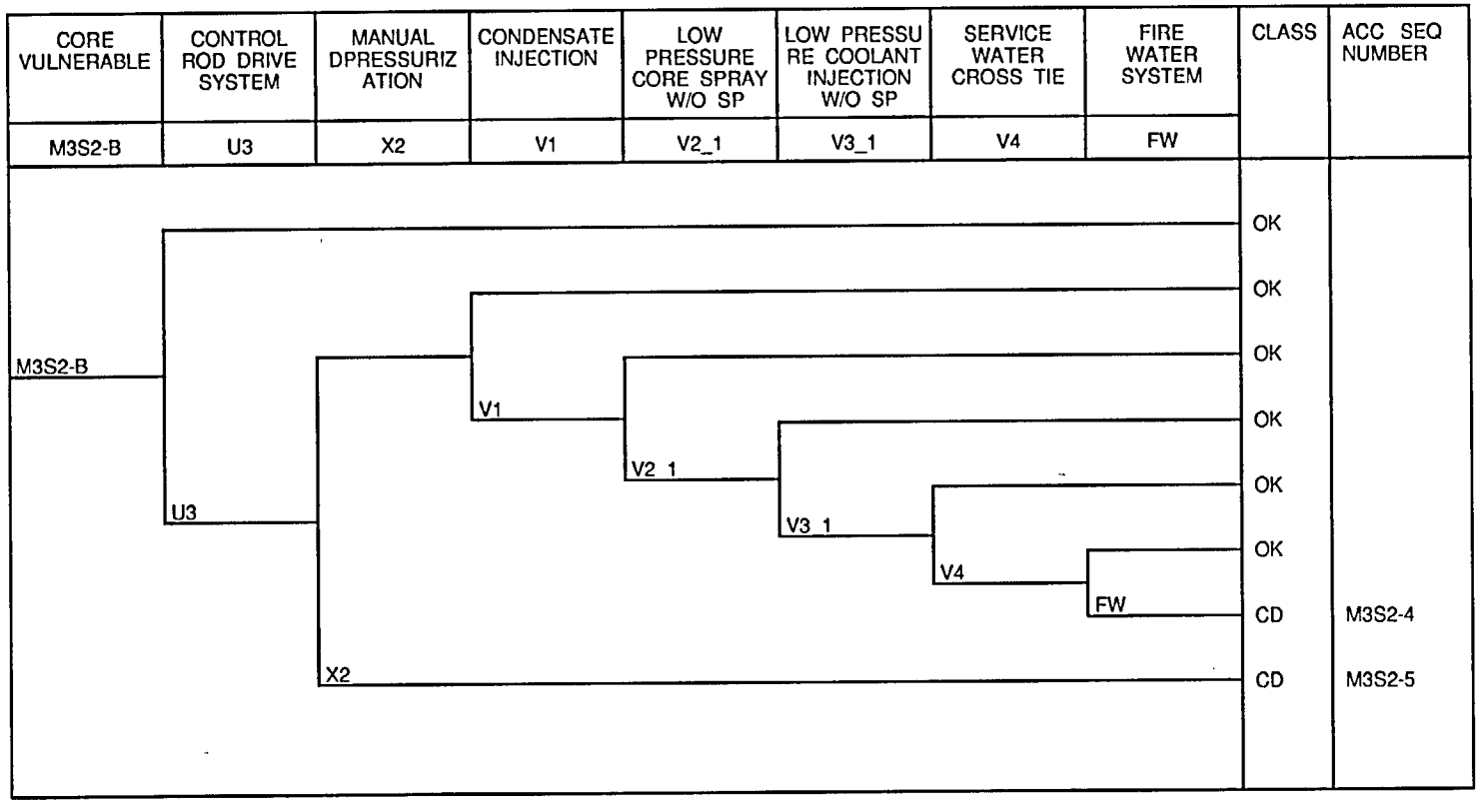

Figure 11-2.3: Core Vulnerable Sequence Group 1 for M3S2-B

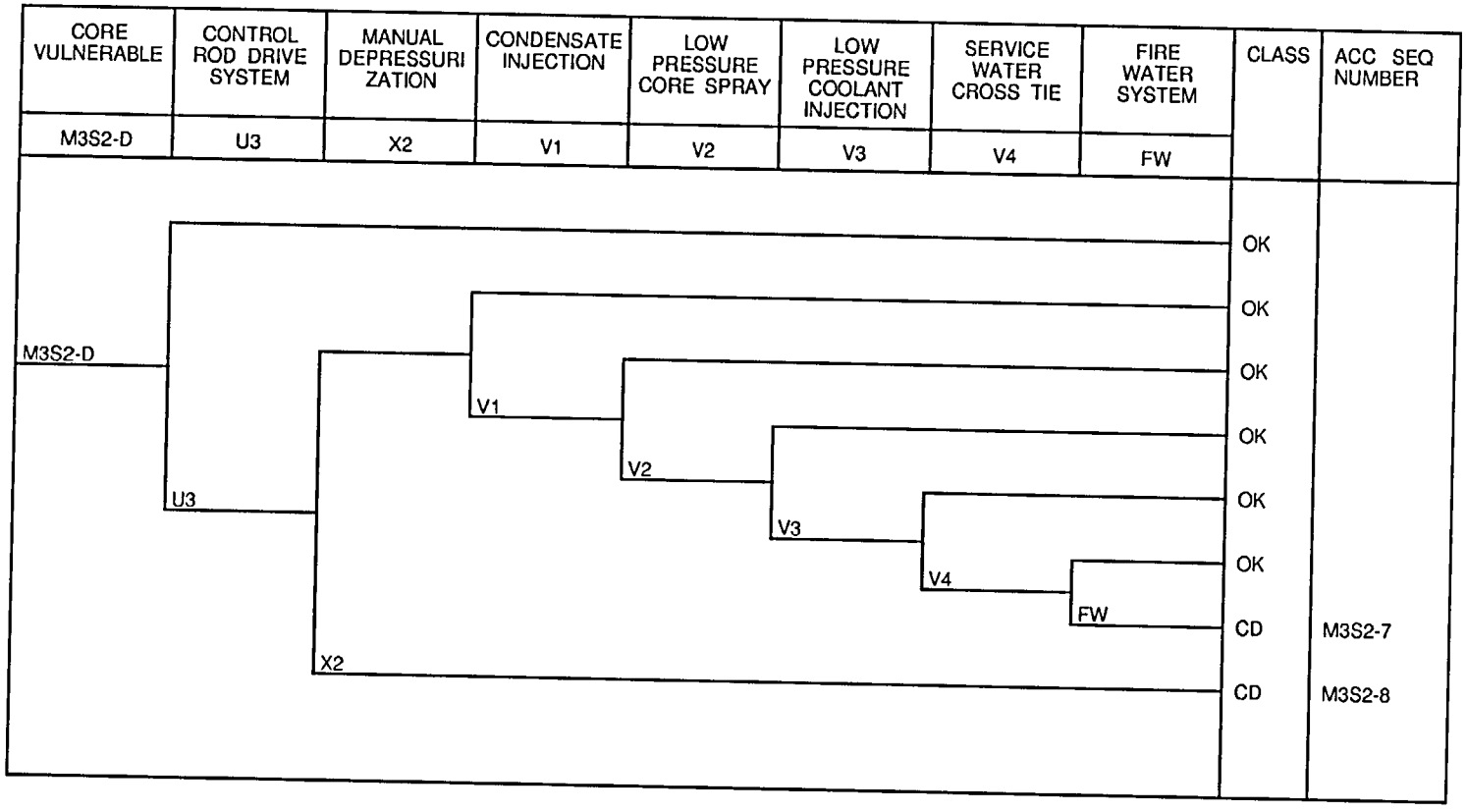

Figure 11-2.4: Core Vulnerable Sequence Group 8 for M3S2-D

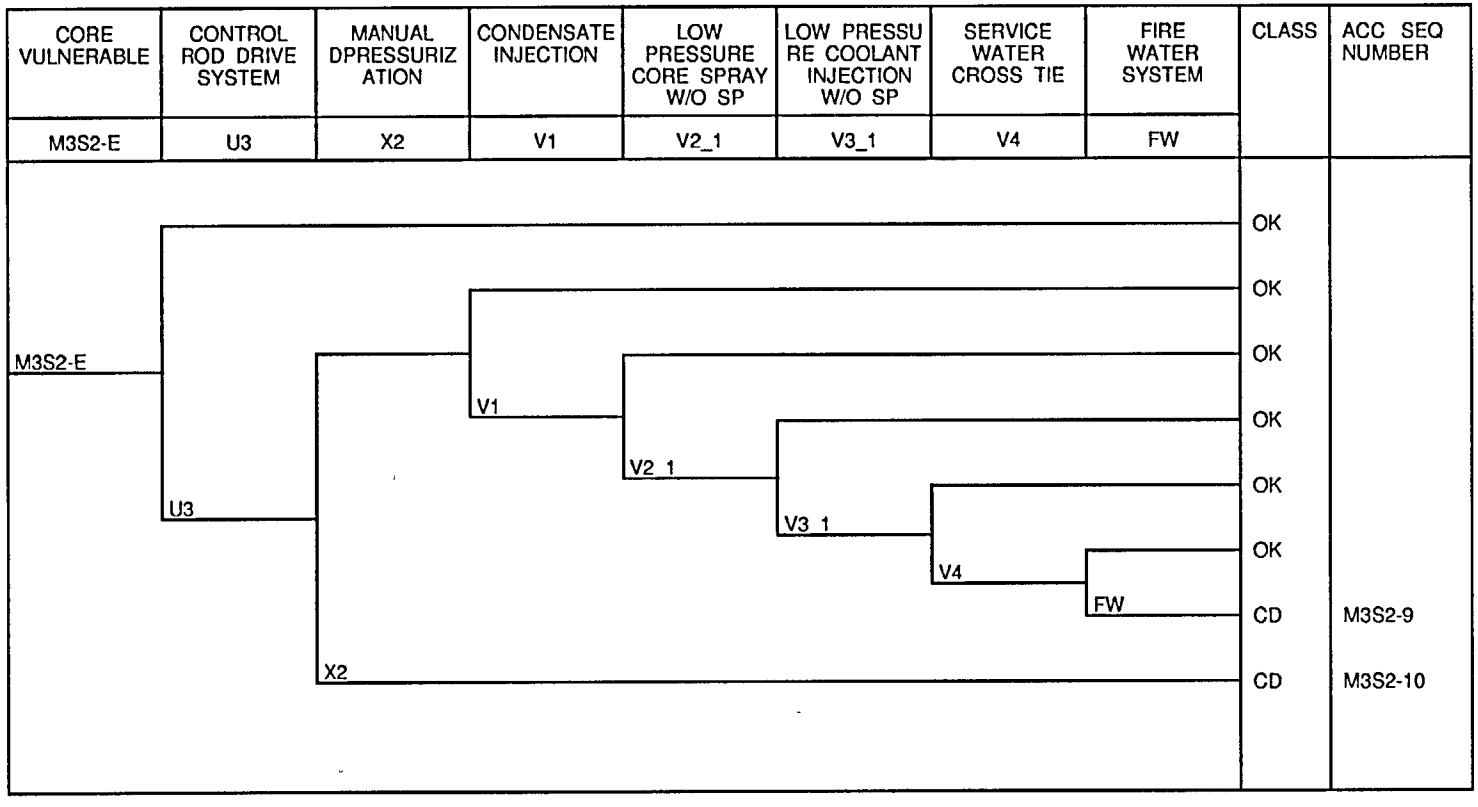

Figure 11-2.5: Core Vulnerable Sequence Group 1 for M3S2-E

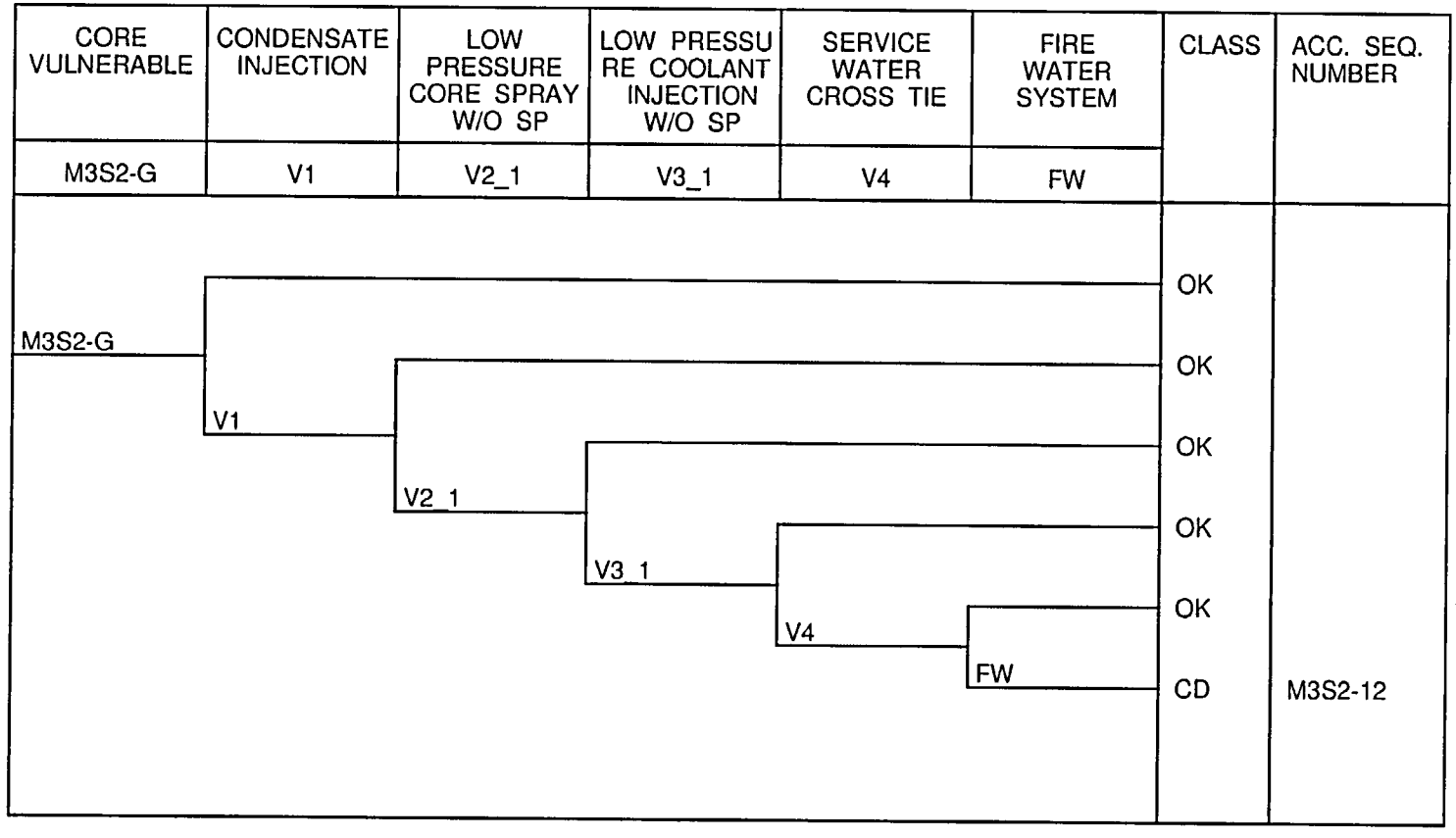

Figure 11-2.6: Core Vulnerable Sequence Group 3 for M3S2-G

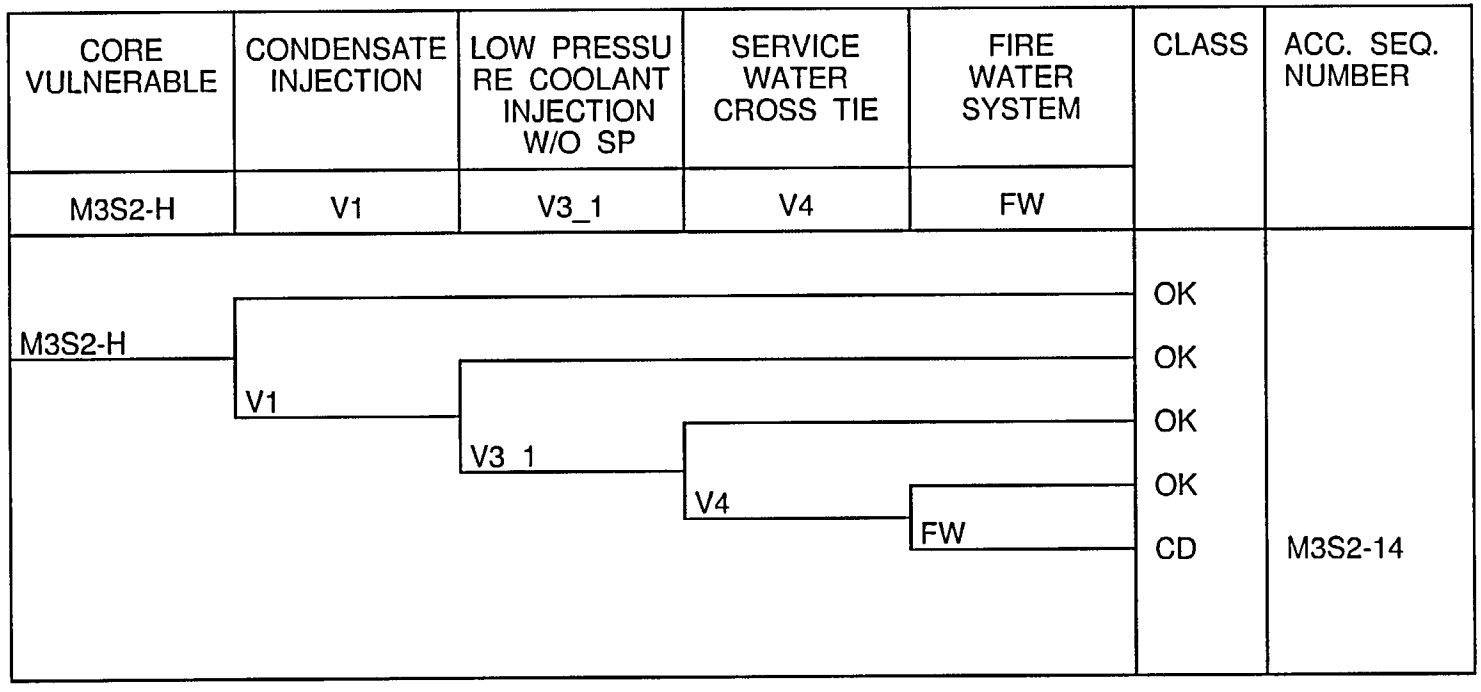

Figure 11-2.7: Core Vulnerable Sequence Group 4 for M3S2-H

Event Tree 3: Mode 3 Loss of Power Conversion System Event Tree

Figures 11-3.1 to 11-3.7 display the event tree for the Loss of Power Conversion System initiator.

The following event tree headings appear on the tree in the approximate chronological order that would be expected following a Loss of Power Conversion System.

M3T3:	Initiating event. Loss of Power Conversion System in Mode 3.
REC1:	Failure to recover Power Conversion System.
U1:	Failure of the HPCI system. Success implies operation of the HPCI pump train so as to maintain sufficient coolant injection.
U2:	Failure of the RCIC system. Success implies operation of the RCIC pump train so as to maintain sufficient coolant injection.
U3:	Failure of the CRD system as an injection source. Success implies two pump operation.
X1:	Failure of RPV Depressurization. Success implies automatic or manual operation of at least 3 SRVs to allow low pressure coolant injection.
X2:	Failure of manual RPV depressurization.
V2:	Failure of LPCS. Success implies at least one of two LPCS pumps is operating with the suppression pool as the water source.
V2_1:	Failure of LPCS. Success implies operation of either of the two LPCS pumps with CST as the water source*.
V3:	Failure of LPCI. Success implies at least one of four LPCI pumps is operating with the suppression pool as the water source.
V3_1:	Failure of LPCI. Success implies operation of one of the four LPCI pumps with CST as the water source*.
V4:	Failure of Service Water (SW) system in the injection mode to the reactor vessel through a LPCI injection line. Success implies manual operation of this injection source such that one SW pump successfully provides coolant to the reactor.
FW:	Failure of Firewater (FW) System. Success implies at least one FW pump (diesel or motor-driven) starts operating within 2 to 8 hours.

* Injection from the Condensate Storage Tank (CST) only.

FW1:	Failure of Firewater System. Success implies at least one FW pump (diesel or motor-driven) starts operating within 2 hours.
W1:	Failure of RHR in suppression pool cooling (SPC) mode. Success implies at least one of four RHR pumps operating in SPC mode with the appropriate heat exchanger in the loop along with SW system in operation to the ultimate heat sink.
W2:	Failure of RHR in shutdown cooling (SDC) mode. Success implies at least one of four RHR pumps operate in SDC mode.
Y1:	Failure of Containment Venting. Success implies the vent line is open so as to prevent containment failure by overpressure.

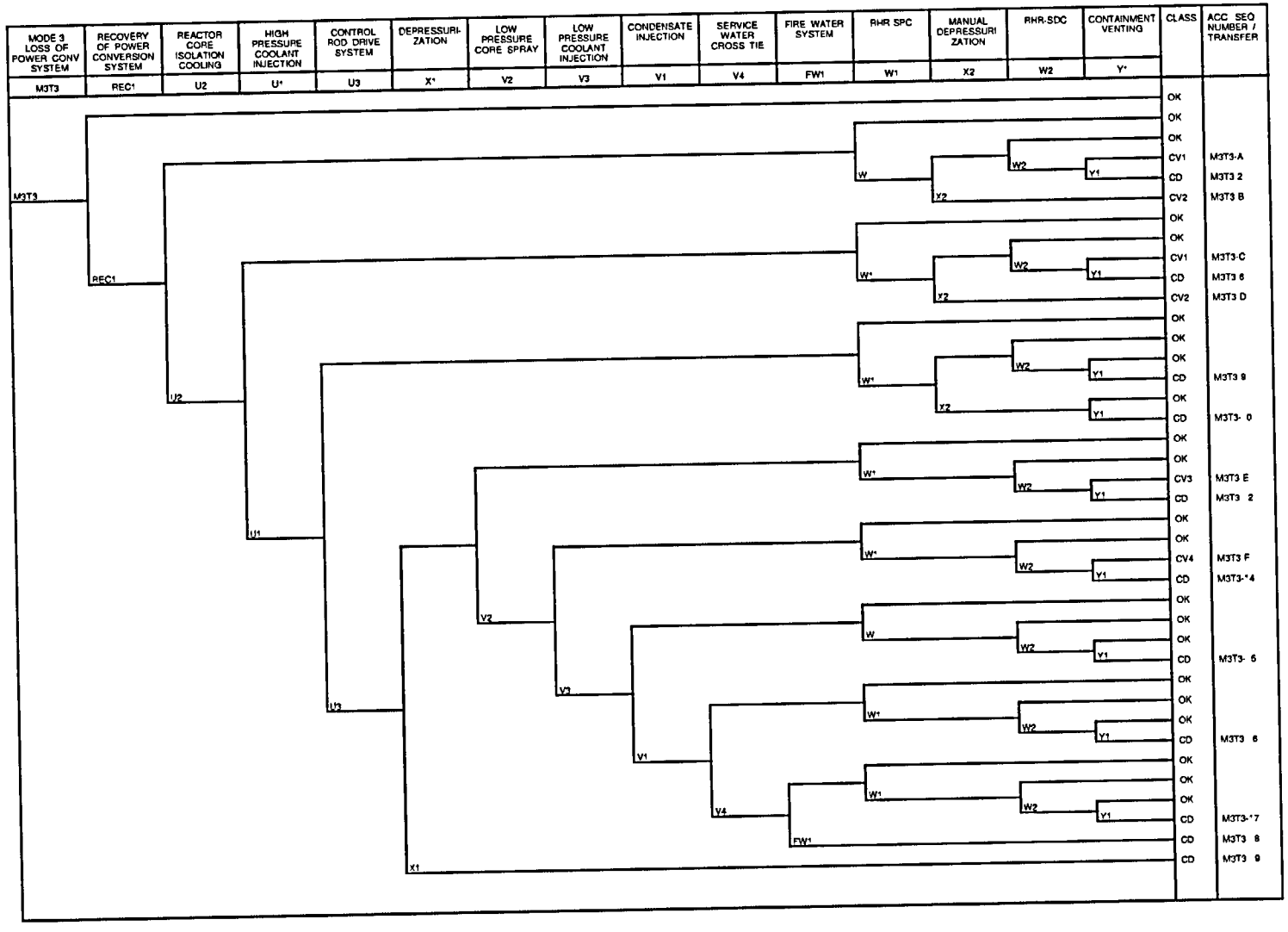

Figure 11-3.1: Mode 3 Loss of Power Conversion System Event Tree

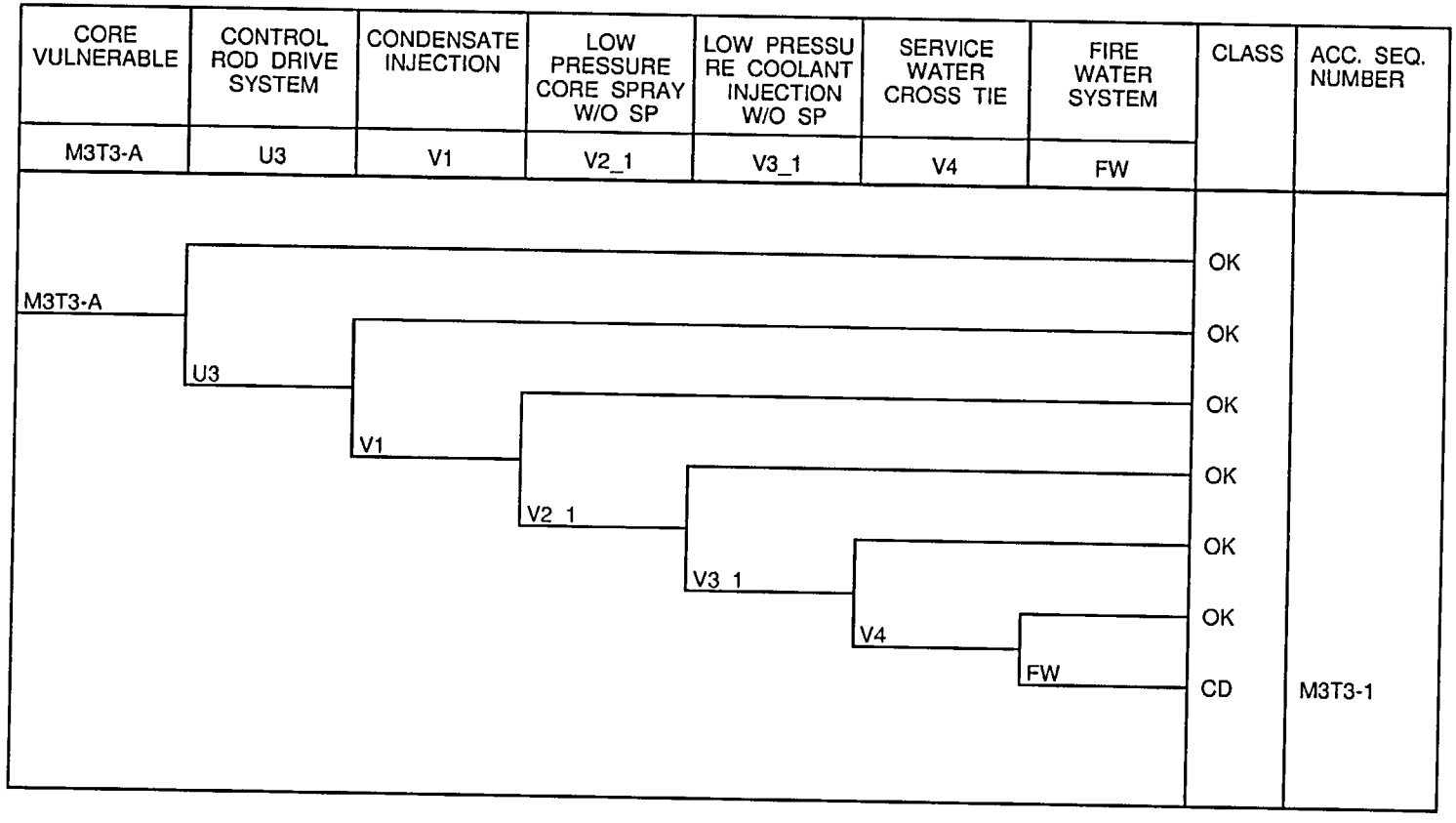

Figure 11-3.2: Core Vulnerable Sequence Group 1 for M3T3-A

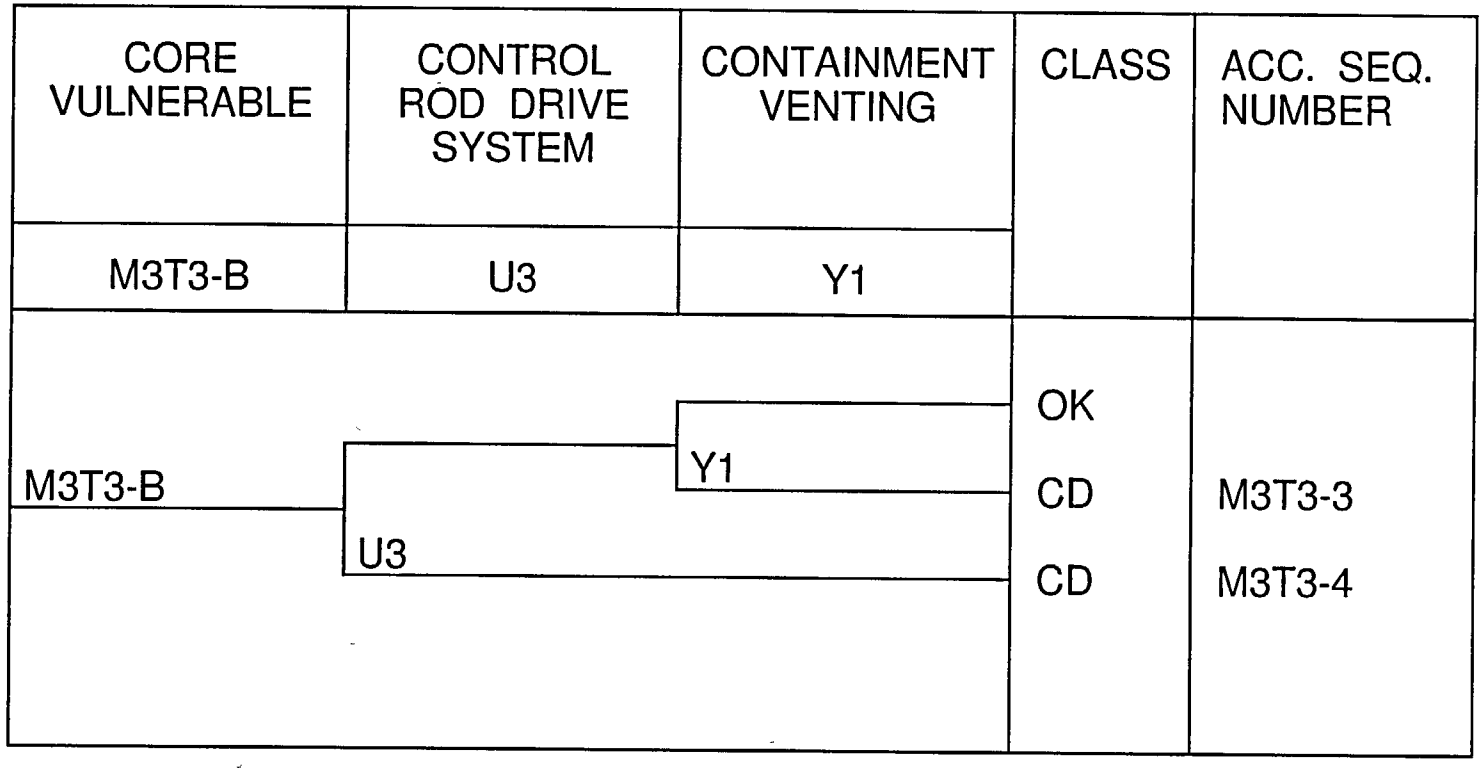

Figure 11-3.3: Core Vulnerable Sequence Group 2 for M3T3-B

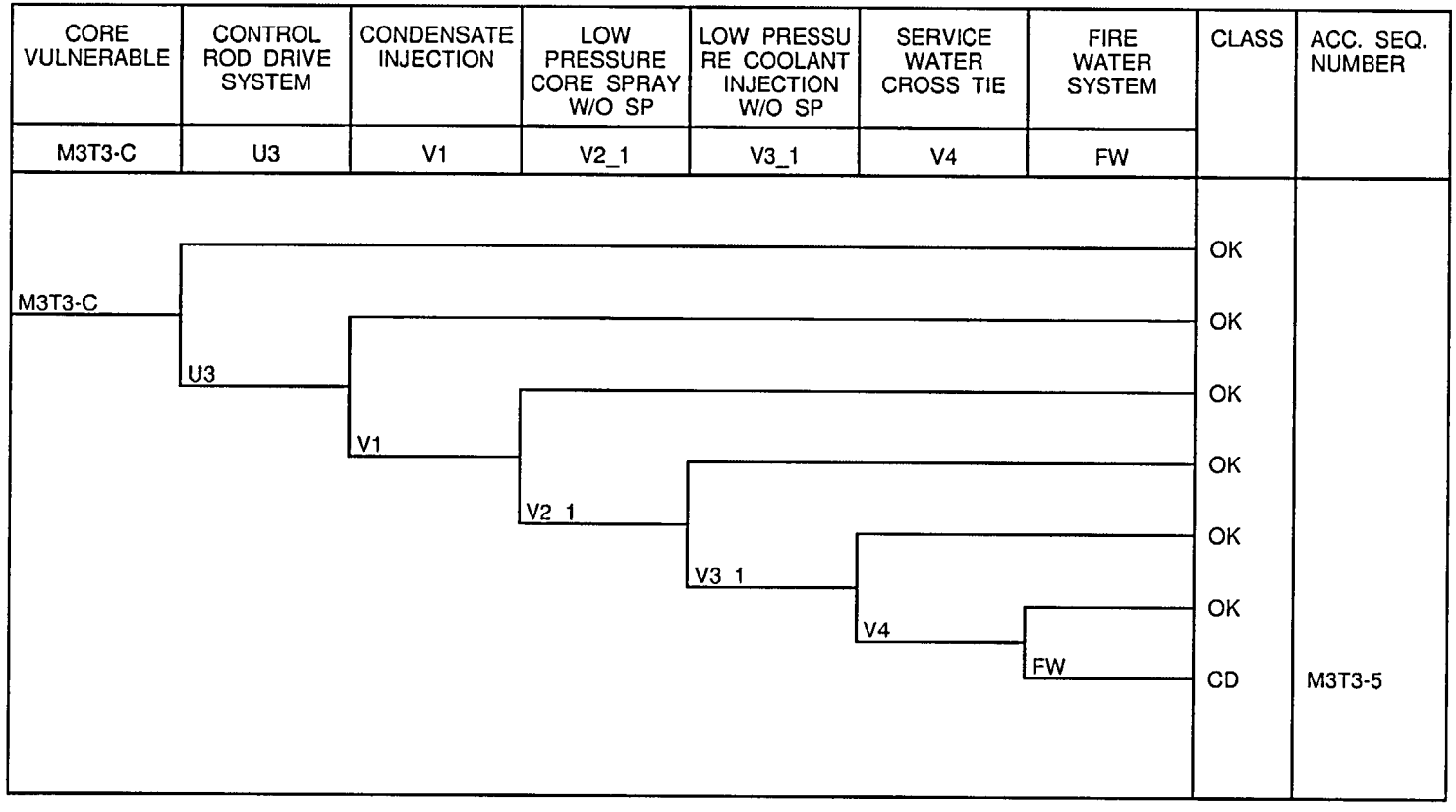

Figure 11-3.4: Core Vulnerable Sequence Group 1 for M3T3-C

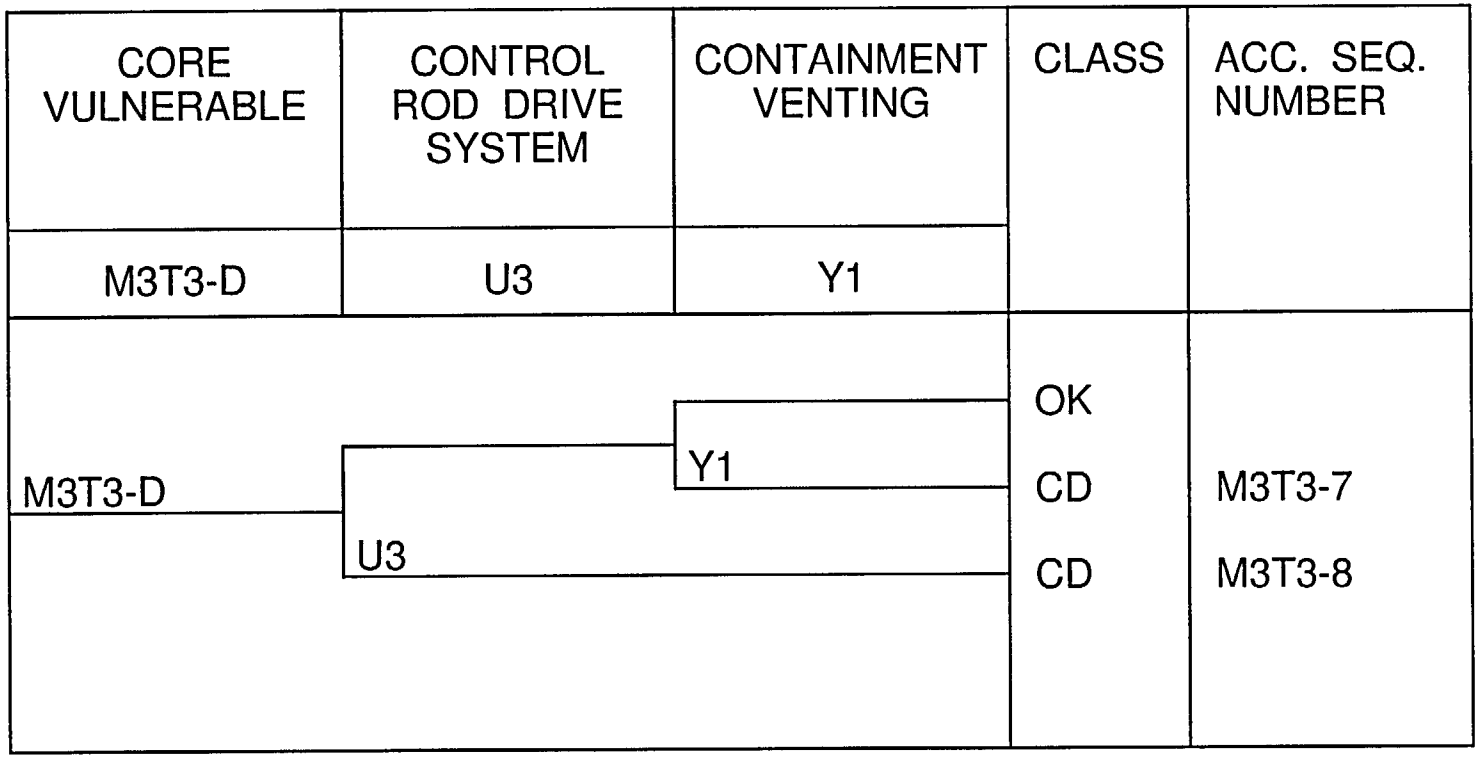

Figure 11-3.5: Core Vulnerable Sequence Group 2 for M3T3-D

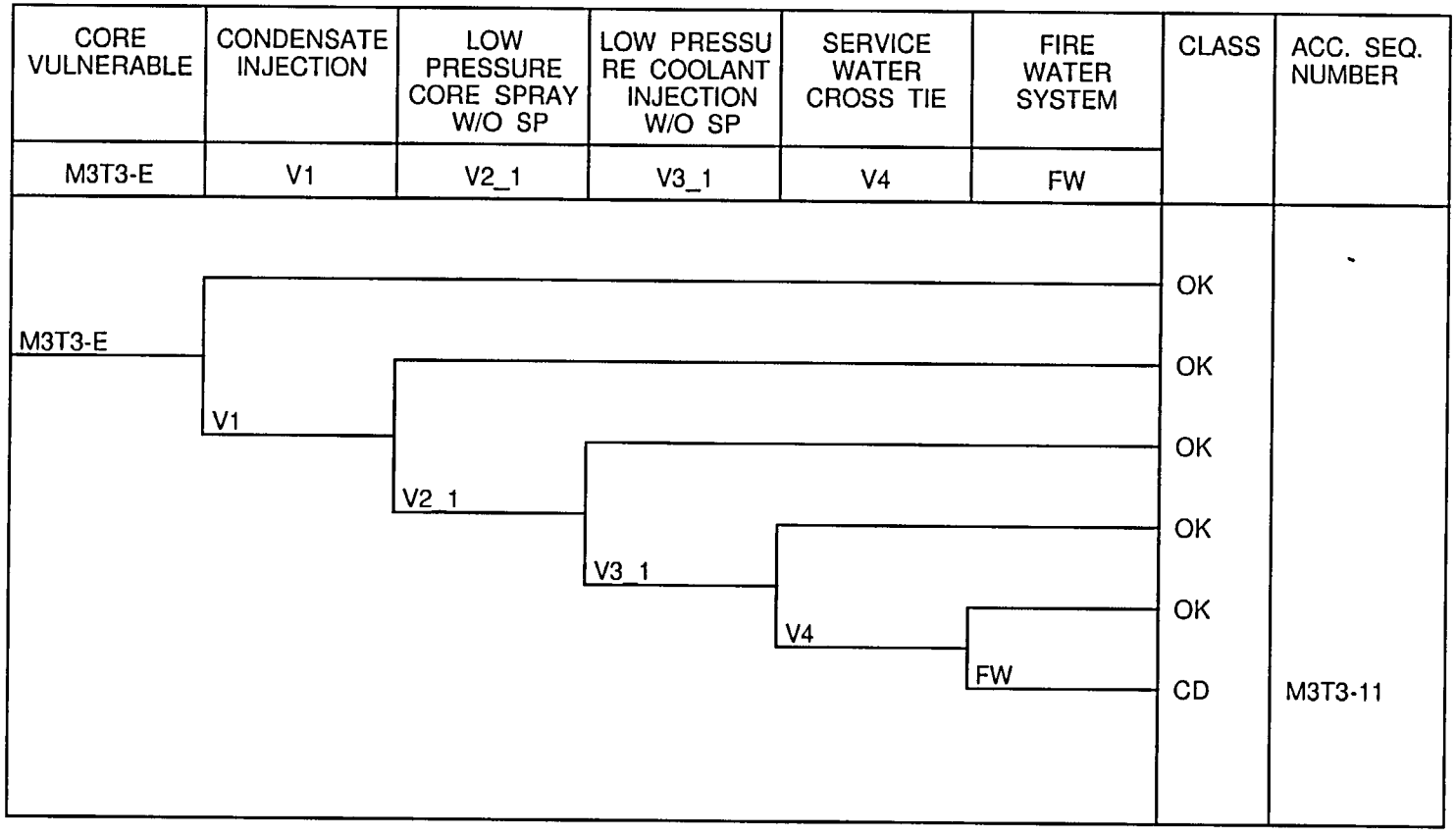

Figure 11-3.6: Core Vulnerable Sequence Group 3 for M3T3-E

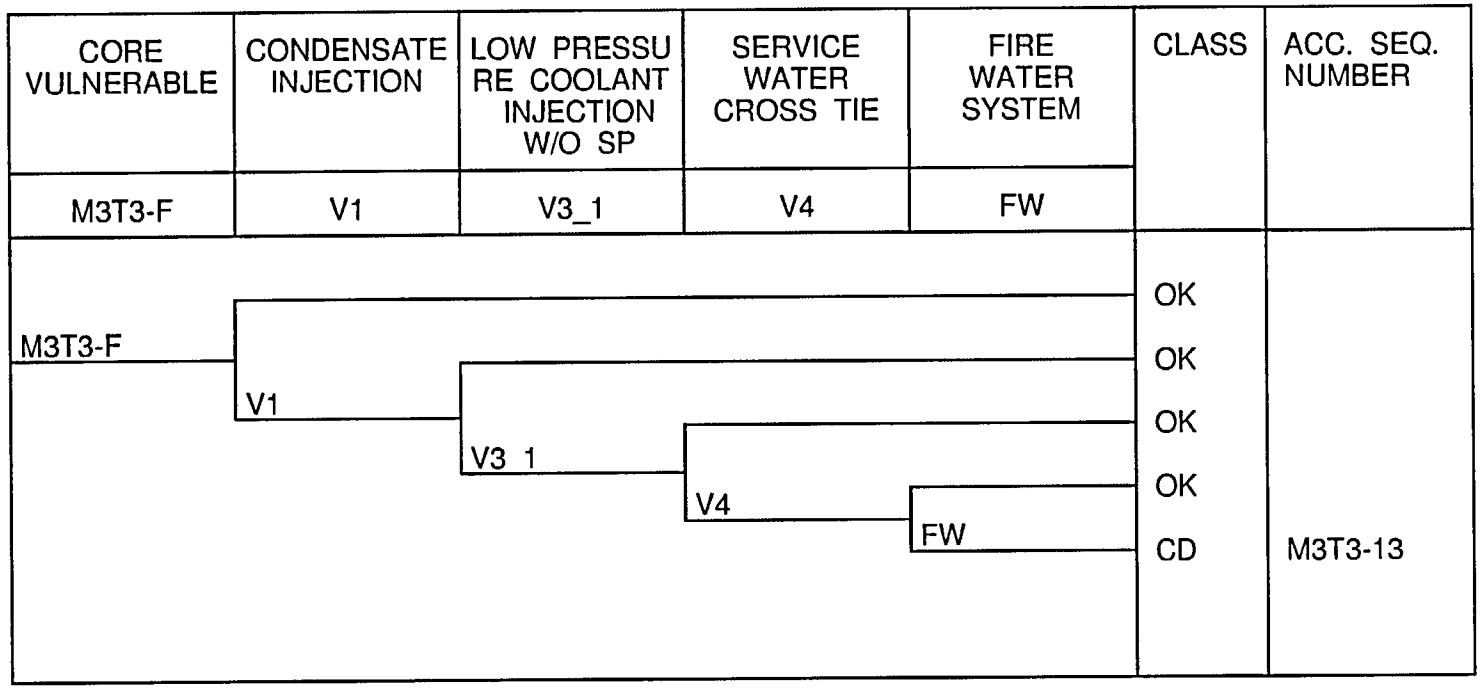

Figure 11-3.7: Core Vulnerable Sequence Group 4 for M3T3-F

Event Tree 4: Mode 3 Loss of Service Water Event Tree

Figure 11-4.1 displays the event tree for the Loss of Service Water initiator.

The following event tree headings appear on the tree in the approximate chronological order that would be expected following a Loss of Service Water.

M3TSW:	Initiating event. Loss of Service Water in Mode 3.
X1:	Failure of the RPV Depressurization. Success implies automatic or manual operation of at least 3 SRVs to allow low pressure coolant injection.
V2_1:	Failure of LPCS. Success implies operation of either of the two LPCS pumps with CST as the water source*.
V3_1:	Failure of LPCI. Success implies operation of one of the four LPCI pumps with CST as the water source*.
V1:	Failure of the Condensate system.
FW1:	Failure of Firewater System. Success implies at least one FW pump (diesel or motor-driven) starts operating within 2 hours.
Y1:	Failure of Containment Venting. Success implies the vent line is open so as to prevent containment failure by overpressure.

* Injection from the Condensate Storage Tank (CST) only.

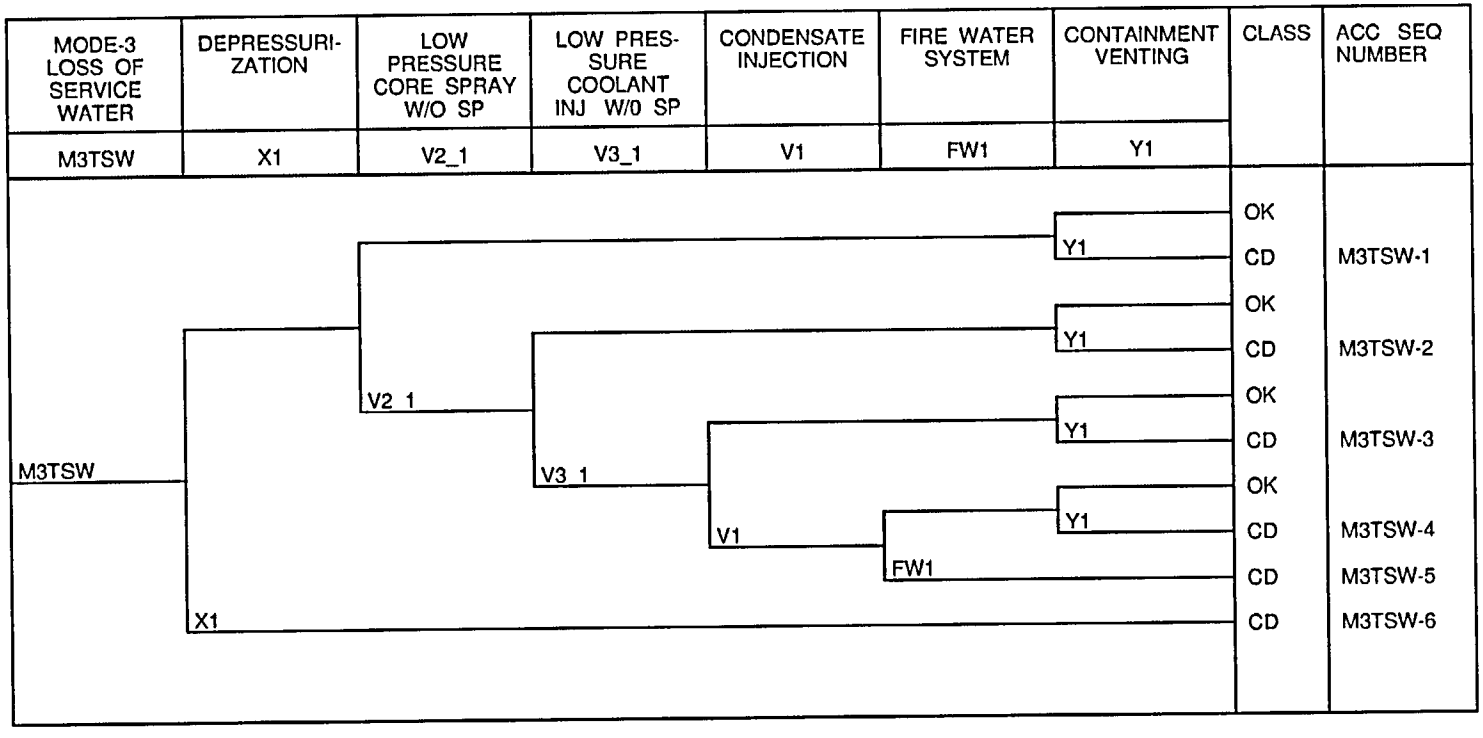

Figure 11-4.1: Mode 3 Loss of Service Water Event Tree

Event Tree 5: Mode 4 Loss of Offsite Power Event Tree

Figures 11-5.1 to 11-5.3 display the event tree for the Loss of Offsite Power initiator.

The following event tree headings appear on the tree in the approximate chronological order that would be expected following a Loss of Offsite Power.

M4T1:	Initiating event. Loss of Offsite Power in Mode 4.
REC2:	Failure to recover offsite power.
B:	Failure of the onsite emergency AC power system.
U3:	Failure of the Control Rod Drive (CRD) system as an injection source. Success implies two pump operation.
V2:	Failure of LPCS. Success implies at least one of two LPCS pumps is operating with the suppression pool as the water source.
V2_1:	Failure of the Low Pressure Core Spray (LPCS) system. Success implies operation of either of the two LPCS pumps with CST as the water source*.
V3:	Failure of LPCI. Success implies at least one of four LPCI pumps is operating with the suppression pool as the water source.
V3_1:	Failure of LPCI. Success implies operation of one of the four LPCI pumps with CST as the water source*.
V4:	Failure of Service Water (SW) system in the injection mode to the reactor vessel through a LPCI injection line. Success implies manual operation of this injection source such that one SW pump successfully provides coolant to the reactor.
FW:	Failure of Firewater (FW) System. Success implies at least one FW pump (diesel or motor-driven) starts operating within 2 to 8 hours.
FW1:	Failure of Firewater system. Success implies at least one FW pump (diesel or motor-driven) starts operating within 2 hours.
W1:	Failure of RHR in suppression pool cooling (SPC) mode. Success implies at least one of four RHR pumps operating in SPC mode with the appropriate heat exchanger in the loop along with SW system in operation to the ultimate heat sink.
W2:	Failure of RHR in shutdown cooling (SDC) mode. Success implies at

* Injection from the Condensate Storage Tank (CST) only.

least one of four RHR pumps operate in SDC mode.

Y1: Failure of Containment Venting. Success implies the vent line is open so as to prevent containment failure by overpressure.

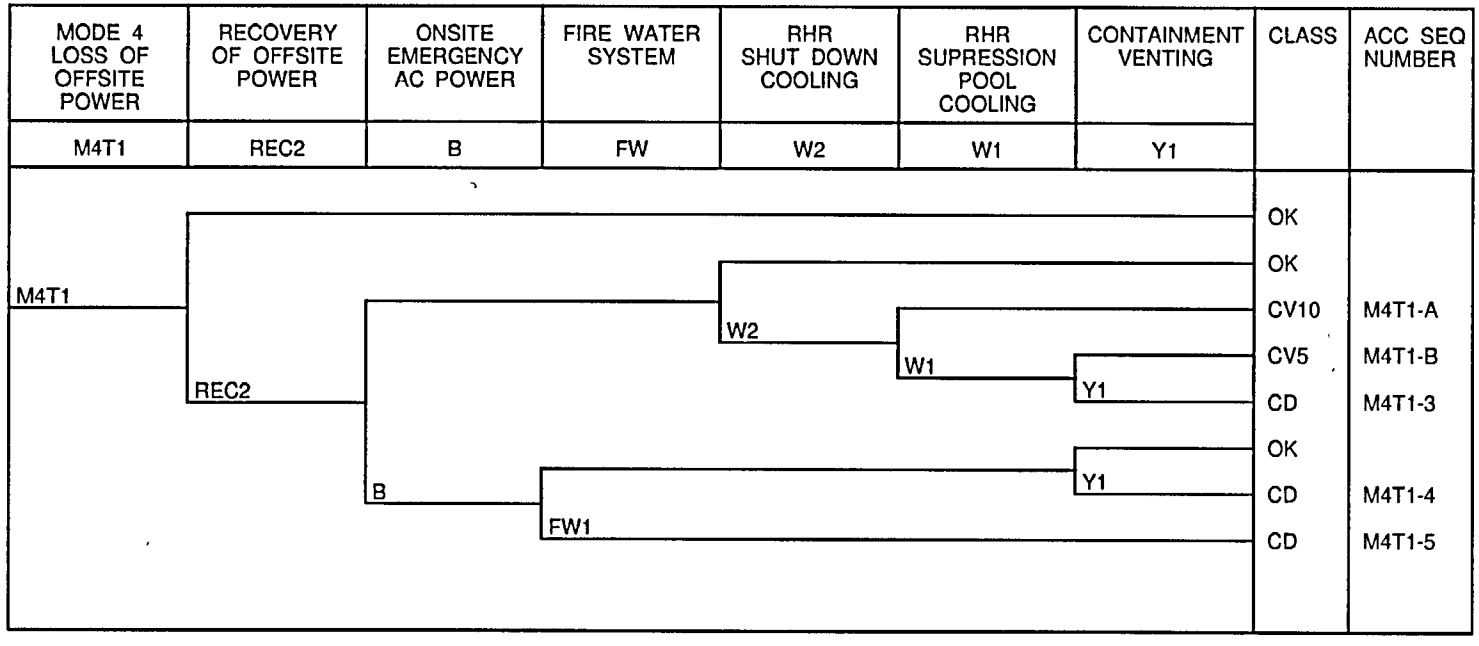

Figure 11-5.1: Mode 4 Loss of Offsite Power Event Tree

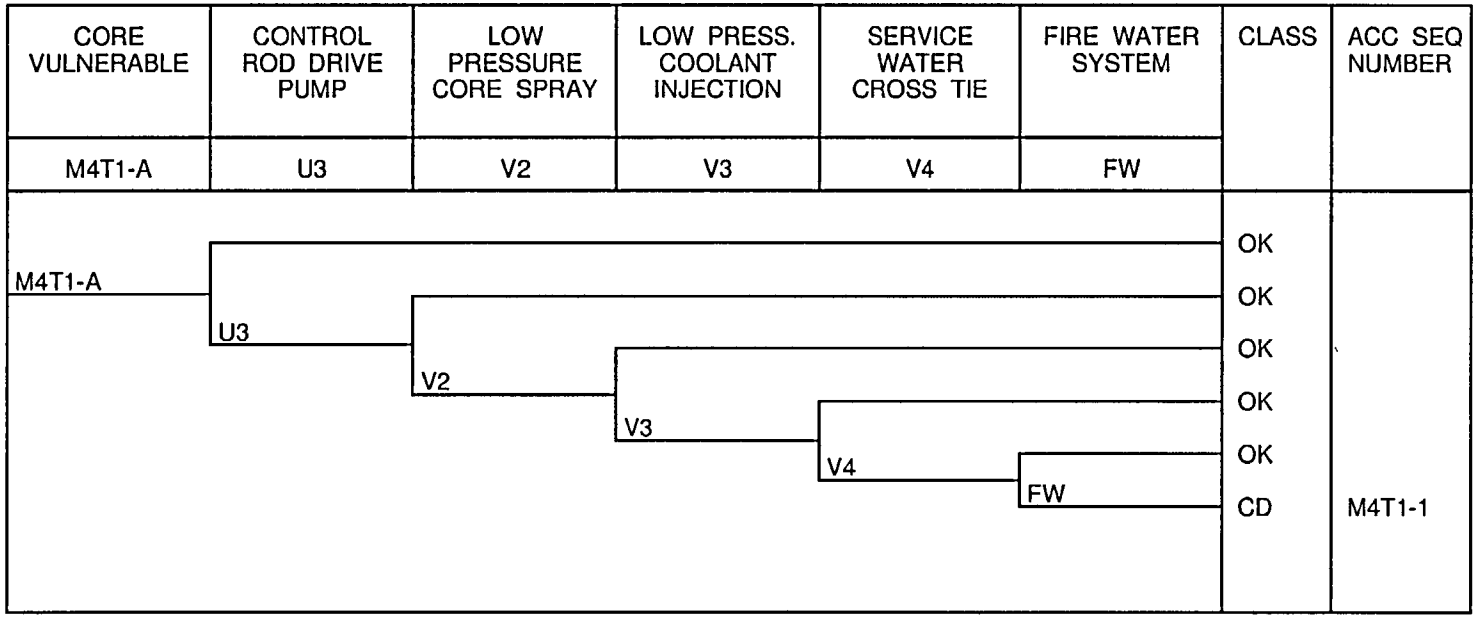

Figure 11-5.2: Core Vulnerable Sequence Group 10 for M4T1-A

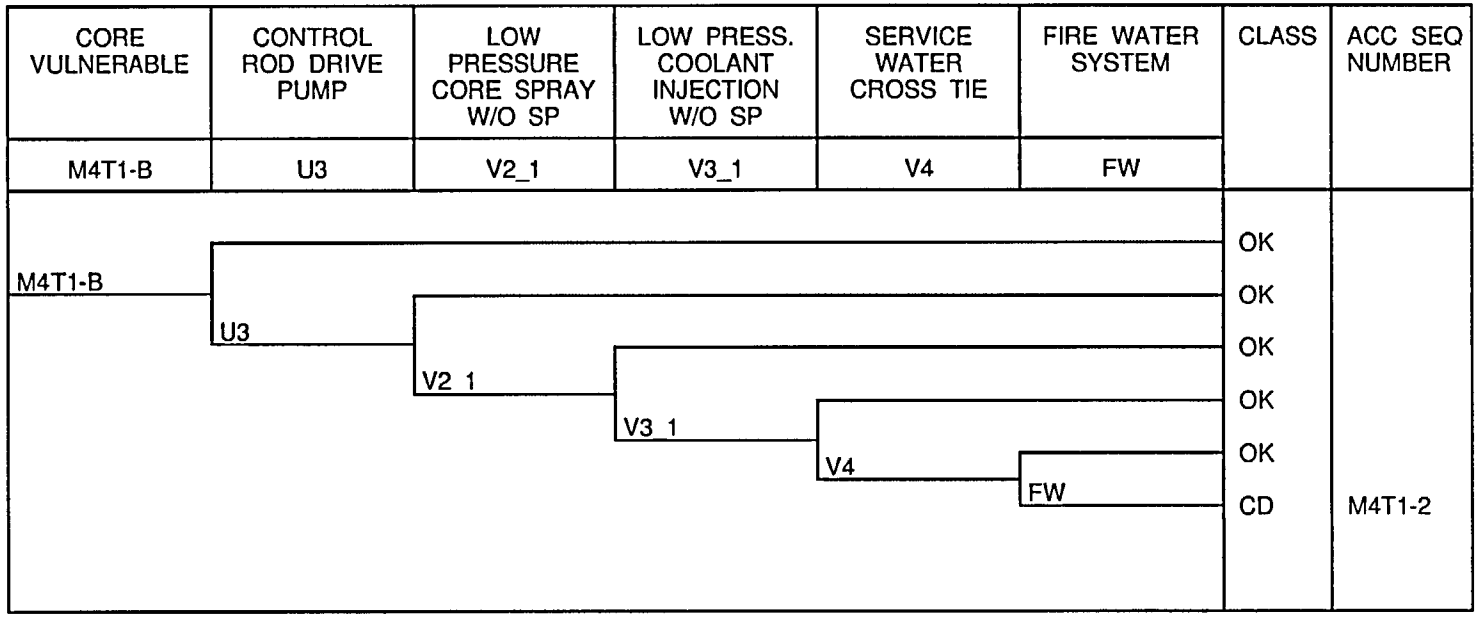

Figure 11-5.3: Core Vulnerable Sequence Group 5 for M4T1-B

Event Tree 6: Mode 4 Small Loss of Coolant Inventory

Figures 11-6.1 to 11-6.3 display the event tree for the small loss of coolant inventory initiator.

The following event tree headings appear on the tree.

M4S2:	Initiating event. Small Loss of Coolant Inventory in Mode 4.
V1:	Failure of Condensate Injection.
V2:	Failure of LPCS. Success implies at least one of two LPCS pumps is operating with the suppression pool as the water source.
V2_1:	Failure of LPCS. Success implies operation of either of the two LPCS pumps with CST as the water source*.
V3:	Failure of LPCI. Success implies at least one of four LPCI pumps is operating with the suppression pool as the water source.
V3_1:	Failure of LPCI. Success implies operation of one of the four LPCI pumps with CST as the water source*.
V4:	Failure of Service Water (SW) system in the injection mode to the reactor vessel through a LPCI injection line. Success implies manual operation of this injection source such that one SW pump successfully provides coolant to the reactor.
FW:	Failure of Firewater (FW) System. Success implies at least one FW pump (diesel or motor-driven) starts operating within 2 to 8 hours.
FW1:	Failure of Firewater System. Success implies at least one FW pump (diesel or motor-driven) starts operating within 2 hours.
W1:	Failure of RHR in suppression pool cooling (SPC) mode. Success implies at least one of four RHR pumps operating in SPC mode with the appropriate heat exchanger in the loop along with SW system in operation to the ultimate heat sink.
W2:	Failure of RHR in shutdown cooling (SDC) mode. Success implies at least one of four RHR pumps operate in SDC mode.
W3:	Failure of RHR drywell spray.
Y1:	Failure of Containment Venting. Success implies the vent line is open so

* Injection from the Condensate Storage Tank (CST) only.

as to prevent containment failure by overpressure.

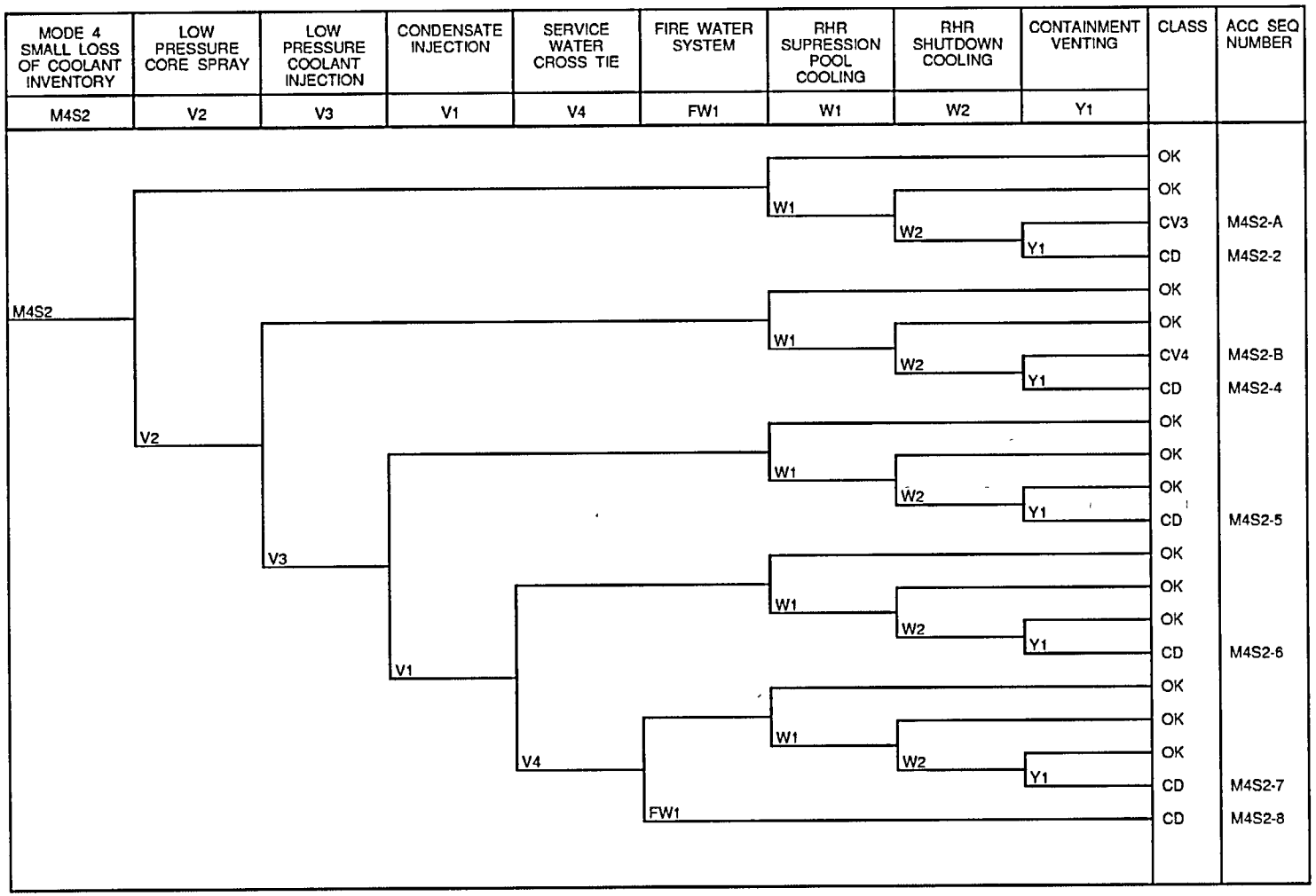

Figure 11-6.1: Mode 4 Small Loss of Coolant Inventory Event Tree

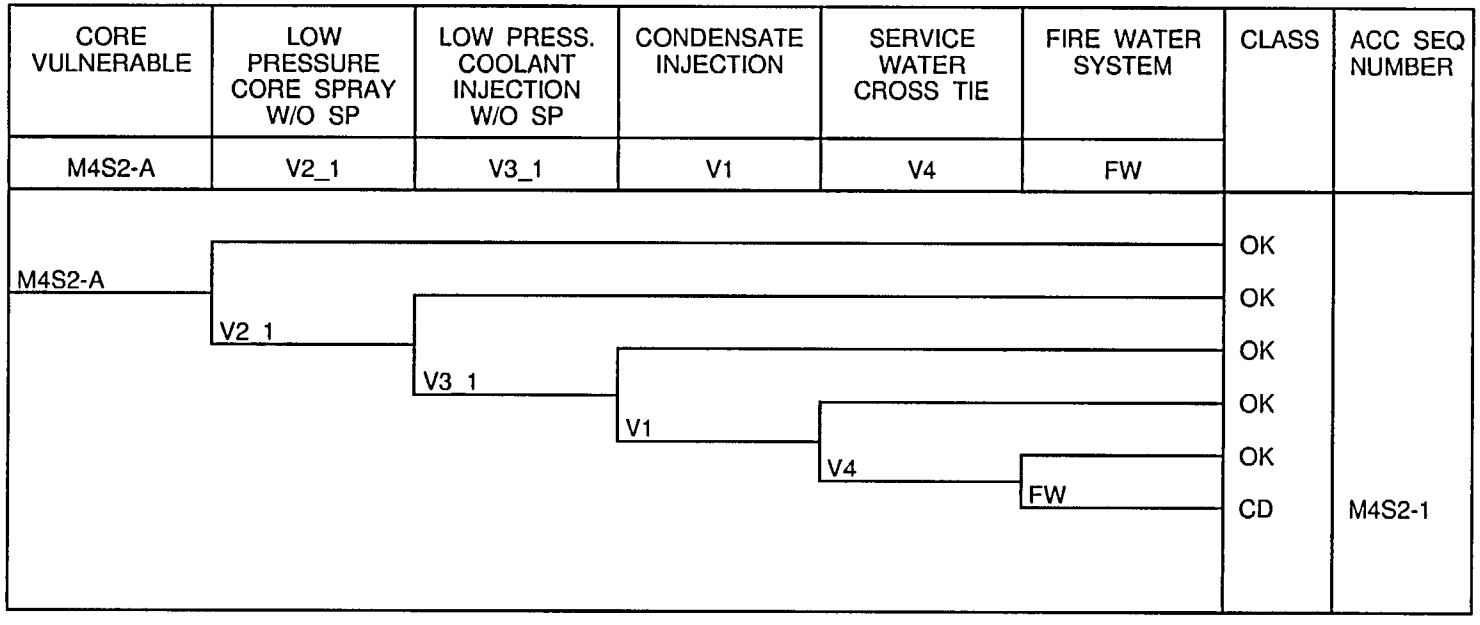

Figure 11-6.2: Core Vulnerable Sequence Group 3 for M4S2-A

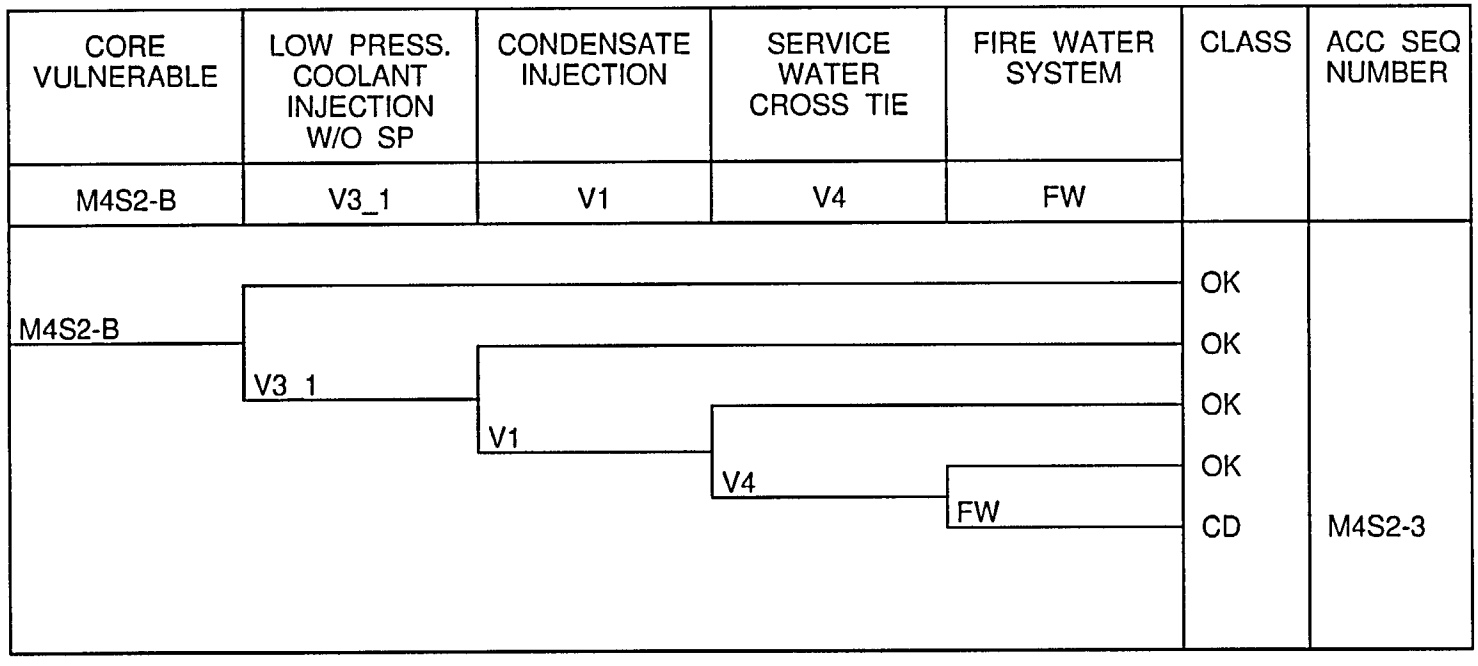

Figure 11-6.3: Core Vulnerable Sequence Group 4 for M4S2-B

Event Tree 7: Mode 4 Loss of One RHR SDC Loop Event Tree

Figures 11-7.1 to 11-7.3 display the event tree for loss of one RHR SDC loop initiator.

The following event tree headings appear on the tree in the approximate chronological order that would be expected following a Loss of One RHR SDC Loop.

M4T4:	Initiating event. Loss of One RHR SDC Loop in Mode 4.
REC3:	Failure to recover the RHR loop.
RHR_2:	Failure of second RHR loop. Success implies second RHR loop available.
U3:	Failure of the CRD system as an injection source. Success implies two pump operation.
V1:	Failure of Condensate Injection.
V2:	Failure of LPCS. Success implies at least one of two LPCS pumps is operating with the suppression pool as the water source.
V2_1:	Failure of LPCS. Success implies operation of either of the two LPCS pumps with CST as the water source*.
V3:	Failure of LPCI. Success implies at least one of four LPCI pumps is operating with the suppression pool as the water source.
V3_1:	Failure of LPCI. Success implies operation of one of the four LPCI pumps with CST as the water source*.
V4:	Failure of Service Water (SW) system in the injection mode to the reactor vessel through a LPCI injection line. Success implies manual operation of this injection source such that one SW pump successfully provides coolant to the reactor.
FW:	Failure of Firewater (FW) System. Success implies at least one FW pump (diesel or motor-driven) starts operating within 2 to 8 hours.
W1_2:	Failure of second RHR loop in suppression pool cooling (SPC) mode. Success implies at least one of two RHR pumps in the second loop operating in SPC mode with the appropriate heat exchanger in the loop along with SW system in operation to the ultimate heat sink.
Y1:	Failure of Containment Venting. Success implies the vent line is open so

* Injection from the Condensate Storage Tank (CST) only.

as to prevent containment failure by overpressure.

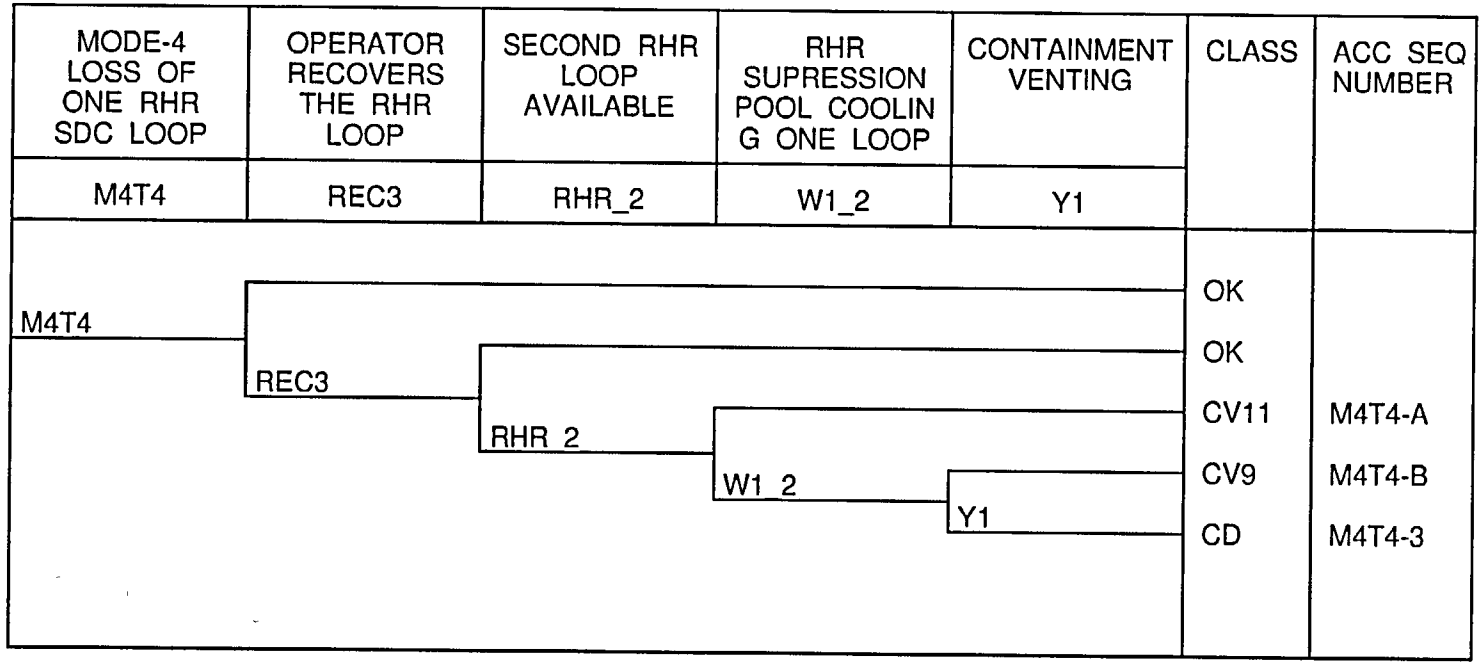

Figure 11-7.1: Mode 4 Loss of One RHR SDC Loop Event Tree

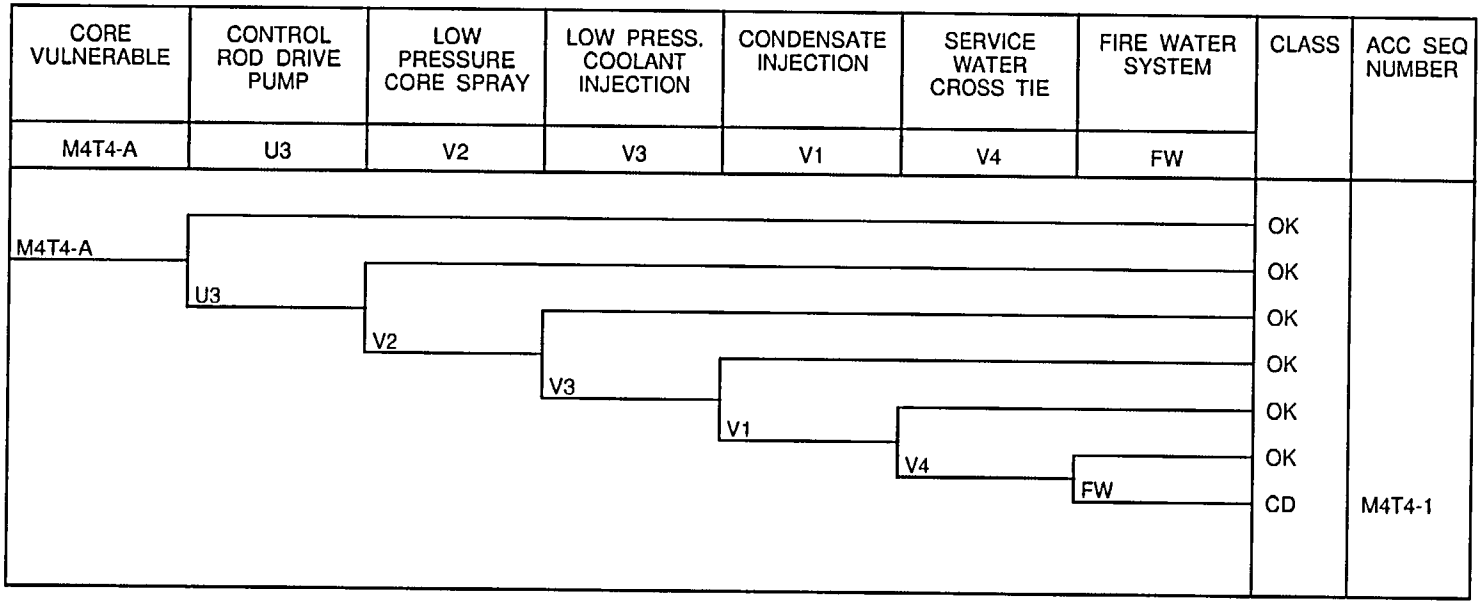

Figure 11-7.2: Core Vulnerable Sequence Group 11 for M4T4-A

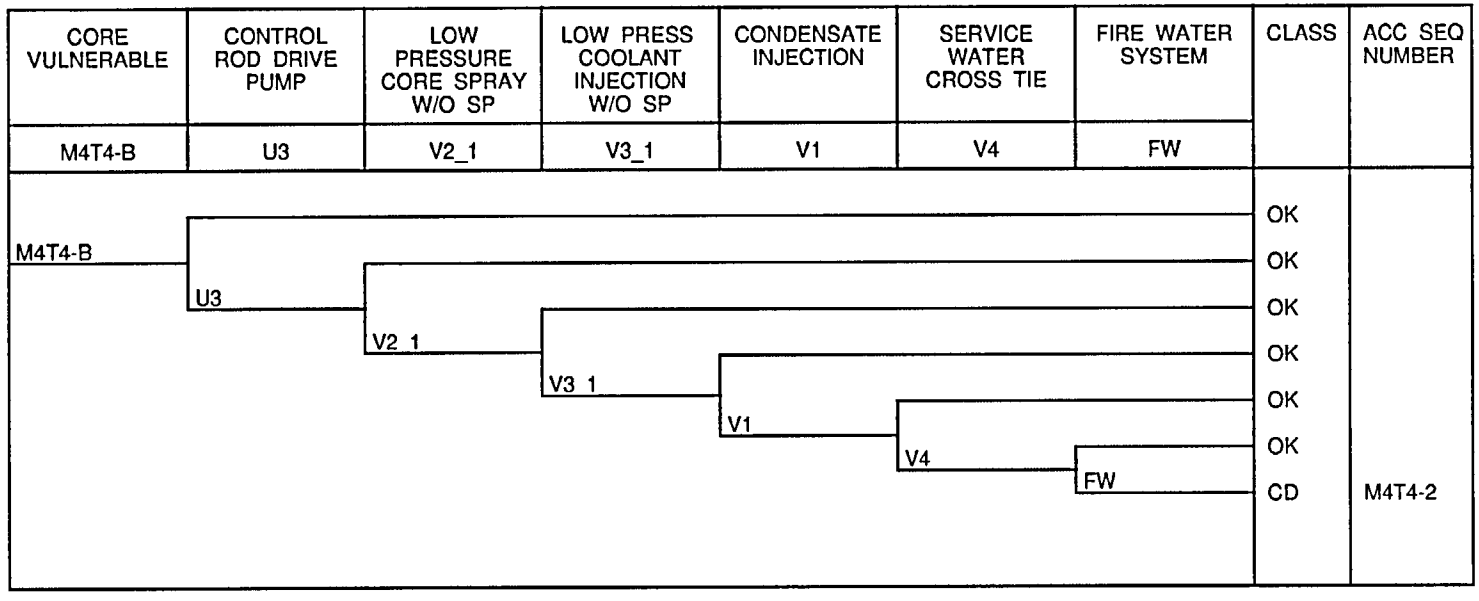

Figure 11-7.3: Core Vulnerable Sequence Group 9 for M4T4-B

Event Tree 8: Mode 4 Loss of Service Water Event Tree

Figure 11-8.1 displays the event tree for the Loss of Service Water initiator.

The following event tree headings appear on the tree in the approximate chronological order that would be expected following a Loss of Service Water.

M4TSW:	Initiating event. Loss of One Service Water Loop in Mode 4.
V2_1:	Failure of LPCS. Success implies operation of either of the two LPCS pumps with CST as the water source*.
V3_1:	Failure of LPCI. Success implies operation of one of the four LPCI pumps with CST as the water source*.
V1:	Failure of the Condensate system.
FW:	Failure of Firewater System. Success implies at least one FW pump (diesel or motor-driven) starts operating within 2 to 8 hours.
Y1:	Failure of Containment Venting. Success implies the vent line is open so as to prevent containment failure by overpressure.

* Injection from the Condensate Storage Tank (CST) only.

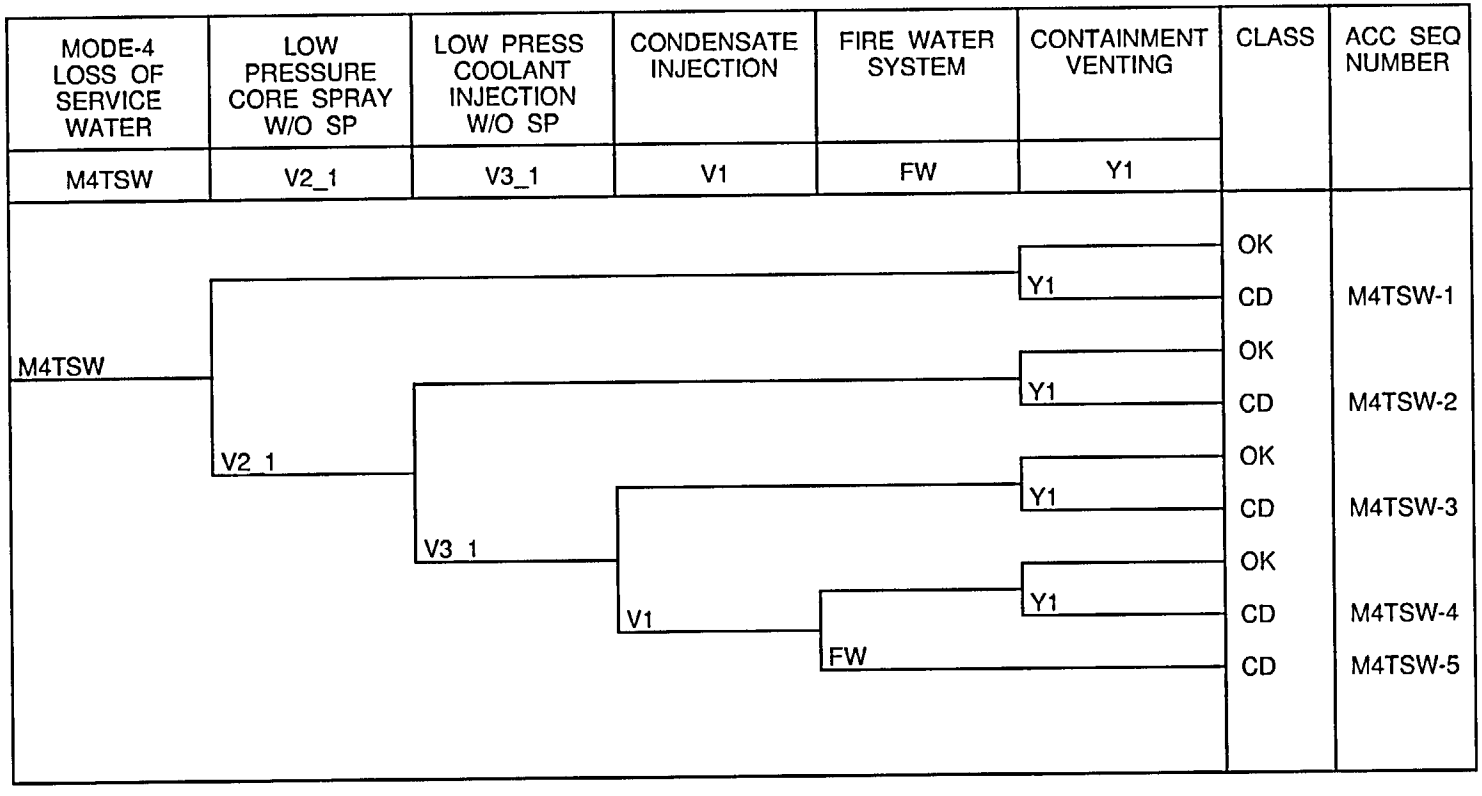

Figure 11-8.1: Mode 4 Loss of Service Water Event Tree

12 On page 4-8 it is stated· "Because of the very limited time involved in this transition and the low probability of drain-down when the RHR system is engaged in the SDC mode, it is judged that the transition risk from Mode 3 to Mode 4 is insignificant relative to overall Mode 3 and Mode 4 risks." The staff does not believe that, in general, a plant transition does not involve significant risk if it takes place in a very short time. On the contrary, a transition that involves alignments requiring human actions can involve significant risk independently of how short the transition is. Please clarify the above statement and explain the reasons for the low probability of drain-down when the RHR system is engaged in the SDC mode.

Response:

There is a transition risk associated with engaging RHR in the shutdown cooling mode of operation while transitioning from Mode 3 to Mode 4. This risk is mainly the probability of core damage due to a drain-down event while RHR valves are being aligned for Shut Down Cooling.

Engagement of RHR in the shutdown Mode is an operation that operators have been trained to perform routinely without error. Even if an error occurs there is plenty of time available for recovery. The BWR low water level instrumentation is still available to initiate core cooling automatically. Finally, many systems are available for providing the core cooling function. We therefore believe that this transition risk is small.

As a final point, if the transition risk were to be included, it further supports the position that it is safer to stay in Mode 3 than to go to Mode 4.

13. It is stated (Section 4.4.3.3; page 4-8) that "...the conclusions reached in this report, based on the internal event PSA, remain unchanged even when external events are factored in." Qualitative arguments are used to support the above statement for seismic as well as for internal fire and flood events. With regard to internal fire and flood events, the main argument is that such events "....are generally more likely to occur during Mode 4 because of increased maintenance activities and presence of transient combustible material in Mode 4." The staff does not agree that increased maintenance activity takes place every time the plant is being shut down by the actions specified in the technical specifications (TSs). On the contrary, what is more likely to happen is to keep the plant in the "end-state" allowed by the TSs long enough to fix the problem and then return to power operation again A comparison between Mode 3 and Mode 4 with respect to the impact of a fire or flood event on the systems used in these two modes would be an acceptable qualitative argument. Please explain.

Response:

We agree with NRC Staff comment that increased maintenance activity does not routinely take place in Mode 4 operation. We propose to revise that Section 4.4.3.3 as follows:

"Internal flood and internal fire events are equally likely to occur during Mode 3 or Mode 4. In each case, the flood or the fire disables the equipment in the affected fire and flood zone. It is judged that the effect of having one or more systems unavailable following a fire or a flood will be greater on the Mode 4 results than on the Mode 3 PSA results, because more mitigating systems are available in Mode 3. The consideration of fire and flood is more likely to favor staying in Mode 3, where additional core cooling systems are available."

14. Section 4.4.3.4 discusses several sensitivity studies performed to assess the robustness of the results to uncertainties in data and modeling assumptions used in the PRA. The staff requests more information regarding the approach used to identify important uncertainties in data and modeling assumptions as well as information regarding the numerical findings of the sensitivity studies Please provide the following information:

A brief discussion of the approach used to identify potentially important uncertainties in data and modeling assumptions used in the PRA

The initial list of potentially important areas of uncertainty in data and modeling assumptions that were identified.

Discuss the qualitative arguments used to justify screening out any uncertainties from further evaluation through sensitivity studies.

Results of sensitivity studies, preferably in tabular form, showing assumed changes in parameters, assumptions or models and appropriate interpretation of results in terms of the assumed changes.

Response:

Uncertainties in PRAs result arise from the uncertainty introduced in the various input to the PRAs. Following is a discussion on the potential areas of uncertainty and their impact on the results. Certain assumptions were identified in the following:

1. **Initiating Events:** The issue here is how complete is the list of initiating events considered in the PRA. In full power PRA, an accident initiator starts with a reactor scram. However, in the Mode 3 and 4 PRAs, initiators mostly involve failure of running systems or loss of offsite power. We believe that we have selected all of the appropriate initiators for this comparison between Mode 3 and 4 risks. (See response to RAI 9 also.) Any initiators not included in the evaluation are judged to have negligible effect on the comparison.

2. **Initiating event frequency:** Because the initiators involve mostly the failure of running systems, the initiating event frequencies for Mode 3 and 4 are very similar or identical. It is our belief that the results (i.e., the difference in CDF between Modes 3 and 4) are not sensitive to changes in the initiating event frequencies. In response RAI 10 additional details are provided supporting our position on this issue.

3. **Success Criteria:** The issue here is how complete and accurate are the criteria. No specific thermal-hydraulic analyses were conducted to develop the success criteria for Modes 3 and 4. Rather, they were developed based on those developed for the full power PRA. Reactivity control is not an issue for Modes 3 and 4, and the only critical functions of interest are the core cooling and containment heat removal.

   For core cooling function, one pump (RCIC, HPCI, LPCS, Fire-Water, Condensate) is sufficient to provide adequate core cooling in a full power PRA. Because of the reduced

decay heat loads, there is more certainty that the same one pump will provide the necessary core cooling in Modes 3 and 4. Similarly, one RHR pump will provide the needed heat removal in Modes 3 and 4 as in the full power PRA. The only potential uncertainty may be associated with the need for two CRD pumps in Modes 3 and 4. A more plant-specific evaluation could suggest that one CRD pump may be sufficient for certain plants. However, the CRD is a normally running system with high reliability and because of the need for operator action to align these pumps in the injection mode, any potential impact on the results of aligning one pump versus two pumps is judged to be negligible.

An area of potential conservatism is the number of SRVs needed to depressurize the reactor in order to permit low pressure coolant injection. For Mode 3, three SRVs were judged to be required as in the full power PRA. More realistic thermal-hydraulic analyses might show that one or two SRVs are sufficient. However, the reactor depressurization reliability in BWRs is very high and this potential conservatism is judged to have negligible impact on the results.

4. **Accident Event Trees:** These have been developed to the same level of detail as the state-of-the-art PRAs and we believe that any uncertainty in the event tree modeling will have negligible effect on the results of the study.

5. **System Capability:** The only other area of uncertainty is that not all plants have taken credit for Fire-Water system and CRD system in their full power PRAs. It is quite likely that these plants could align these systems, if needed in Mode 3 or 4 because of the time available for such an action. However, without proper procedures and training, most PRAs will not credit such systems. Therefore, sensitivity analyses were conducted to see the impact on the results with and without these two systems. In addition, it was noted that not all plants had the capability to align the LPCS and LPCI pumps to the CST. This capability was also modeled in the sensitivity study.

6. **Data (Basic Event Failure Probability):** Based on a review of the results, three basis events were considered for sensitivity studies. These include the probability of: a) Primary Containment Vent Valve failure, b) Diesel Generator Common Cause Failure, and c) Operator failing to operate the primary containment vent.

The above discussion is summarized as follows:

The results and conclusions of this study are insensitive to changes in initiating events and their frequencies, success criteria, and event trees. There is some potential impact associated with the changes and system capability and data. The analyses performed to evaluate these changes are summarized below in Table 14-1.

The parameter of interest in the analyses is the difference in CDF between Mode 3 and Mode 4 conditions. The base case Mode 3 has a CDF of 1.53 E-6 per year whereas the base case Mode 4 has a CDF of 1.52E-6 per year. The difference is 1.2E-8 or <1% of Mode 3 CDF.

Table 14-1 Results of Sensitivity Studies

Case	Mode 3 CDF (Per Year)	Mode 4 CDF (Per Year)	Difference (Mode 3 – Mode 4)(%)
Base Case	1.53 E-6	1.52 E-6	<1%
Eliminate Fire Water System	1.59 E-6	1.58 E-6	<1%
Eliminate capability to align low pressure ECCS pumps to CST	1.5 E-6	1.5E-6	<1%
Eliminate CRD System	1.59 E-6	1.58E-6	<1%
10X Increase in Failure Rate of containment vent valve 233 MV	3.2 E-6	3.0 E-6	<7%
10X Decrease in Failure Rate of containment vent valve 233 MV	1.4E-6	1.4E-6	<1%
10X Increase in Failure Probability of operator to vent the containment	2.6E-6	2.5E-6	<4%
10X Decrease in Failure Probability of operator to vent the containment	1.4E-6	1.4E-6	<1%
10X Increase in Failure Probability of common cause failure of all Diesel Generators	2.8E-6	2.8E-6	<1%
10X Decrease in Failure Probability of common cause failure of all Diesel Generators	1.4E-6	1.4E-6	<1%

The above results show that the difference between Mode 3 and 4 CDF is fairly insensitive to changes in the systems and failure rates.

15. Section 4.4.3.4 discusses several sensitivity studies performed to assess the robustness of the results to design and operational differences among BWR plants. The staff requests more information regarding the approach used to identify important design and operational differences (i.e., differences which have the potential to change the results and conclusions of the analysis) as well as information regarding the numerical findings of the associated sensitivity studies. Please provide the following information:

A list of potentially significant differences in design and operational features, preferably in tabular form, of the various BWR plants with respect to the plant model used in the analysis.

Discuss the qualitative arguments used to justify screening out any differences in design and operational features from further evaluation through sensitivity studies.

Results of sensitivity studies, preferably in tabular form, showing assumed changes in design or operational features and appropriate interpretation of results in terms of the assumed changes.

Response:

Section 4.4.2 provides a discussion of the primary safety functions and initiating events considered in the Probabilistic Safety Analysis (PSA) models for Modes 3 and 4. The reactivity control and reactor overpressure control functions were not a concern since the reactor is already shutdown in Modes 3 and 4. The differences in available systems for the core decay heat removal and containment heat removal functions are discussed in Sections 4.4.2.3 and 4.4.2.4 respectively. The initiating events applicable to Modes 3 and 4 are discussed in Section 4.4.2.5 with a complete listing of those included in the models given in Section 4.4.3.1.

A survey of BWR plants was conducted to determine the differences in available safety systems in the Modes 3 and 4 among BWR product lines. A summary of these differences is provided in Table 15-1. The analysis of these plant differences was based on the systems available in Modes 3 and 4. The emphasis was on the relative difference in CDF between Modes 3 and 4 versus the absolute CDF value for each mode. Table 3-1 of RAI 3 lists the relative and absolute difference in CDF between Mode 3 and 4 for selected combinations of equipment availability. The following is a discussion of the effect of plant differences on the overall results:

<u>High Pressure Makeup Function</u>

The major plant differences for high pressure makeup include the High Pressure Coolant Injection (HPCI)/High Pressure Core Spray (HPCS) and Reactor Core Isolation Cooling (RCIC)/Isolation Condenser (IC). For BWR-2 plants and early BWR-3 plants, there is no RCIC system. As discussed in Section 4.4.3.4, the IC and RCIC systems are both steam driven systems with similar reliabilities. One plant difference that could potentially affect the Core Damage Frequency (CDF) difference between Modes 3 and 4 is that in Mode 3, RCIC can mitigate small Loss-of-Coolant Accident (LOCA) while IC cannot. However, small LOCAs are insignificant contributors to the Mode 3 and Mode 4 CDF and therefore this difference is negligible.

For BWR-2 plants, there is no HPCI or HPCS. This difference is not considered significant based on the number of high and low pressure systems available to mitigate an accident.

BWR-5 and -6 plants have a motor-driven HPCS system instead of the steam-driven HPCI system. Both systems can provide core cooling at high reactor pressure. Because HPCI is steam-driven, it can function following a station blackout event. However, HPCS too can function following a station blackout event since HPCS is powered by an independent power source (diesel generator). HPCS and HPCI have similar system reliability and therefore their contributions to Mode 3 results are very similar. HPCI is not available during Mode 4, but HPCS can be available. However, since BWRs have many core cooling systems available during Mode 4, the contribution of one additional system (HPCS) is considered to be negligible. Overall, even with HPCS available in Mode 4, it is still better to stay in Mode 3 than going to Mode 4 because of the availability of RCIC.

Reactor Depressurization

Reactor depressurization is required in order to take advantage of the low pressure makeup and heat removal systems. Reactor depressurization can be accomplished by either manual opening of selected safety/relief valves (SRVs) or by the Automatic Depressurization System (ADS). The failure of one or two SRVs or 1 ADS valve is not a significant contributor to the Mode 3 CDF based on the number of remaining valves available in BWR plants to depressurize the reactor and the availability of high pressure makeup systems. Therefore, the difference in number of ADS valves (and SRVs) among plants is not considered a significant contributor to the Mode 3 and 4 CDF difference.

Low Pressure Makeup Function

There are several differences in the number of pumps for core spray and Low Pressure Coolant Injection (LPCI) systems and the availability of service water cross-tie to the LPCI and fire water pumps. The BWR-2 and early BWR-3 plants have fewer low pressure makeup systems. These differences are not significant based on the total number of high and low pressure makeup systems available for makeup at low pressure. This is evident in case studies listed in Table 3-1 of RAI 3 that involve a water makeup system out of service. These cases indicate that the CDF difference between Mode 3 and Mode 4 has a negligible absolute value (<1.0 E-07/year).

Heat Removal Function

The primary difference in heat removal systems among BWR plants is the number of Feedwater pumps and the availability of Containment Venting. The generic BWR-4 plant assumed a minimum number of Feedwater pumps in relation to other plants. If more pumps are assumed, the CDF during Mode 3 would be smaller than in Mode 4.

Containment Venting is assumed available for both Modes 3 and 4. Since this system applies to both Modes, the relative difference between the CDFs for Modes 3 and 4 would not change if containment venting is not assumed.

Therefore, the conclusion reached using the generic model for the above differences in heat removal systems can be applied to other BWR plants.

Support Systems

The primary difference in support systems among BWR plants is the number of Diesel Generators, Electrical Divisions, and Service Water loops. The generic BWR-4 plant assumed a minimum number of support systems in relation to other plants. If more support system components are assumed, the CDF during Mode 3 would be smaller than in Mode 4. Therefore, the conclusion reached using the generic model for the above differences in support systems can be applied to other BWR plants.

Table 15-1

Mode 3 and 4 Differences and BWR Configuration Summary

Safety Functions	Generic BWR-4	Available In: Mode 3	Available In: Mode 4	BWR Product Lines: BWR-2	BWR-3	BWR-4	BWR-5	BWR-6
Number of:								
High Pressure Makeup								
HPCI or HPCS	HPCI	Yes	No[2]	None	HPCI[3]	HPCI	HPCS	HPCS
RCIC or Isol. Cond. (IC)	RCIC	Yes	No	IC	RCIC or IC	RCIC	RCIC	RCIC
CRD Pumps	2	Yes	Yes	2	2	2	2	2
Reactor Depressurization								
ADS Valves	6	Yes	Not Required	5 to 6	3 to 5	4 to 7	7	7 to 8
Low Pressure Makeup								
Core Spray Pumps/Loops	2/2	Yes[1]	Yes	8/2	2/2	2/2 to 4/2	1/1	1/1
LPCI Pumps	4	Yes[1]	Yes	None	4	4	3	3
Condensate Injection	Yes	Yes[1]	Yes	Yes	Yes	Yes	Yes	Yes
Service Water cross-tie to LPCI	Yes	Yes[1]	Yes	None	None to Yes	None to Yes	None to Yes	None to Yes
Fire Water Pumps	3	Yes[1]	Yes	None	2 to 3	1 to 3	None	None to 3
Heat Removal								
Motor Driven (MD) or Steam Driven (SD) FW Pumps	2 SD	Yes	No	2MD/1SD to 3 MD	2 MD to 3 MD	2 to 3 MD or 2 to 3 SD	1 MD/2 SD or 3 MD or 2 SD	1 MD/2 SD or 3 MD or 2 SD
RHR Loops	2	Yes[1]	Yes	3	2	2	2	2
Containment Venting Assumed	Yes	Yes	Yes	None	Yes	None to Yes	None to Yes	None to Yes
Support Systems								
Diesel Generators	2	Yes	Yes	2	2	2 to 4	3	3
Electrical Divisions	2	Yes	Yes	2	2	2 or 4	3	3
Service Water Loops	2	Yes	Yes	None[4]	None[4] to 2	2	2 to 3	2 to 3

Table 15-1 (Continued)

Mode 3 and 4 Differences and BWR Configuration Summary

Notes for Table 15-1:

(1) Manual RPV depressurization required with safety relief valves (SRVs).
(2) HPCS makeup system available in Mode 4 for BWR-5 and -6 plants
(3) BWR-3 plants which have Isolation Condenser do not have HPCI
(4) Alternatives to Service Water available for BWR-2 and BWR-3

16. In the Abstract on page iii/iv, it concludes, "the proposed end state improvements provide more systems and operational flexibility while avoiding risk sensitive cold shutdown required actions and alignments." Similarly during hot shutdown, plant staff must take actions and perform equipment alignments. The "defense in depth" considerations submitted to support the change in end state from cold shutdown to hot shutdown is not sufficient. The plant can be in a hot shutdown for an indefinite period of time. Additional single failure or operator error can be postulated during this indefinite period. Evaluate potential Chapter 15 transients and accidents which can be postulated during hot shutdown, postulate possible single failure or operator error for possible scenarios during hot shutdown and then compare the consequences for hot shutdown and cold shutdown conditions. Submit a table showing the results.

Response:

The BWROG does not agree with the statement that "(t)he plant can be in a hot shutdown for an indefinite period of time." From decay heat considerations alone, BWRs cannot stay in hot shutdown condition infinitely. Unlike PWRs, heat cannot be added to the BWRs by running the recirculation pumps. There are also practical considerations such as thermal duty on feedwater nozzles that would limit the length of stay in this mode. The BWRs are most likely to stay in hot shutdown for no more than 2 to 3 days and definitely, not more than a week. Because of the limited period of stay in the hot shutdown mode, the considerations of Chapter 15 transients and accidents are not required.

17. According to the Introduction/Background section of the topical report, the assessment considered all TS end states resulting in a cold shutdown (Mode 4). The analysis then evaluated an alternate end state of remaining in hot shutdown (Mode 3) as a preferred alternative to Mode 4 Other potential preferred alternatives, such as low power operation, were outside the scope of this study. Based on staff review of the topical report, changes to TS 3.0.3 end states and reactor steam dome pressure end states, i.e., maintaining reactor pressure above 150 psig, were also proposed by the report. These changes were not discussed in the Introduction/Background section. Additionally, these changes are not consistent with the proposed changes by the CEOG topical report on end states. Further discussion and justification of proposed changes to TS 3.0.3 end states and reactor steam dome pressure end states are needed.

Response:

There were only two proposed LCO changes which lead to a TS 3.0.3 end state. These were LCO 3.7.4 D (BWR-4), Two [MCREC] subsystems inoperable in MODE 1, 2, or 3 and LCO 3.7.3 D (BWR-6), Two [CRFA] subsystems inoperable in MODE 1, 2, or 3. Applying TS 3.0.3 for these specific LCOs would ultimately lead to a Mode 4 end state. Based on the justification provided in Section 4.5.1.16 (BWR–4) and 4.5.2.14 (BWR-6), a Mode 3 end state was proposed for these two LCOs.

Relative to the steam dome pressure end states, we have proposed changes for five LCOs. These are LCO 3.5.1, Conditions C, D, E and F and LCO 3.5.3 Condition A for BWR 4 plants. (For BWR-6 plants LCO 3.5.1 conditions are E and F only.) The reactor depressurization system has been modeled in the Mode 3 event trees and the results indicate very small contribution of this function to the core damage frequency. We believe this justifies staying in Mode 3 for these LCOs.

We agree that the above items should be included in the Introduction/Background section of the report.

18 The BWROG topical report proposed adding additional conditions to several TS. However, the topical report did not discuss what the additional conditions would be. Descriptions of the proposed additional conditions should be provided in the topical report . This will also aid the development of the TSTF, which would support the topical report. Examples of the proposed additional conditions was provided during the June 27, 2001 meeting with the TSTF Task Force (enclosure 2).

Response:

The response to this RAI will be included with the response to RAI 23 to 28 and the RAI "Enclosure 2" questions. The drafts of the technical Specification changes will be withdrawn from the Topical report, marked up and provided to the BWROG ITS Committee for their use in drafting the TSTF.

19. Staff guidance for plant maintenance is given in Regulatory Guide (RG) 1.182, "Assessing and Managing Risk Before Maintenance Activities at Nuclear Power Plants." The RG endorses NUMARC 93-01, especially Section 11. Confirm that the topical report complies with Section 11 of NUMARC 93-01. Identify, if any, inconsistencies with Section 11 of NUMARC 93-01

Response:

The proposed change cannot and does not eliminate the need to follow Maintenance Rule (a)(4) requirements. The requirement for using plant Configuration Risk Management Plan (CRMP) is still in effect. This means RG 1.182 and NUMARC 93-01 (specifically Section 11) are enforced prior to carrying out maintenance.

20. During hot standby, power conversion system (steam path through MSIVs to balance of plant [BOP] and condensate) is used as the normal heat sink. Discuss the alternate heat removal methods in case the normal heat sink is lost during transients and accidents while at hot standby.

Response:

All the systems that can provide core decay heat removal and containment heat removal functions are described in response to RAI 8 and in the success criteria tables provided in response to RAI 11.

21. On page 4-3 of NEDC-32988, critical safety functions are described. However, there is no mention of electrical power supply and the support systems required for other critical safety functions. Please provide appropriate information

Response:

The following new section will be added between the existing Sections 4.4.2.4 and 4.4.2.5 of NEDC-32988 Revision 2 document (see Table 15-1 in the response to RAI 15):

Support Systems

The following major support systems provide the Support Systems safety function for Modes 3 and 4:

- Diesel Generators
- Electrical Divisions
- Service Water Loops

22. Section 4 4.2.3, Core Decay Heat Removal. LPCS is described as low pressure cooling system Typically LPCS abbreviation is used for low-pressure core spray system.

Why isn't high-pressure core spray included (HPCS)? HPCS is designed to function during reactor low pressure and high pressure?

Response:

LPCS refers to "Low Pressure Core Spray" rather than "Low Pressure Cooling System." This text in Section 4.4.2.3 will be corrected.

Although the base case PRA is for BWR-4, which does not have HPCS, "**HPCS System (BWR-5 and -6)**" will be added to the list of "The systems that can provide the core cooling function at high reactor pressure" and to the list of "The systems that can provide the core cooling function at low reactor pressure."

23. Section 4.5, "Individual Technical Specification Assessments." Submit marked-up copies of all the proposed TS changes including the TS Bases.

Response:

In our review of the RAIs regarding Section 4.5, Individual Technical Specification Assessments, it was decided that developing the specific TS word changes are outside the scope of report NEDC-32988. Therefore, the "Proposed Modification" subsections will be revised to include the proposed changes to the LCO of specific components/subsystems. The TSTF will provide the marked-up copies of the Technical Specifications showing how these proposed changes are incorporated in the TS.

24. **BWR/4**, Section 4.5.1.2, LCO 3.4.3, Safety/Relief Valves - Specify the actions for C1 and C2, also the completion times for both.

Response:

See response to RAI 23.

25. **BWR/4**, Section 4.5.1.3, LCO 3.5 1, ECCS System (Operating) - Add G to Conditions C, D, E, F in the new proposed Condition H2.

Response:

See responses to RAI 17 and RAI 23.

26. **BWR/4**, Section 4.5.1.6, Low-Low Set (LLS) Valves - Specify the actions for the proposed C1 and C2 and the duration times

Response:

See response to RAI 23.

27. **BWR/6**, Section 4.5.2.2, LCO 3.4.4, Safety/Relief Valves (SRVs) - Specify the actions for C1 and C2 and the completion times for both

Response:

See response to RAI 23.

28. **BWR/6**, Section 4.5.2.5, LCO 3.6.1.6, Low-Low Set (LLS) Valves - Specify the actions for the proposed C1 and C2 and the duration times.

Response:

See response to RAI 23.

BWROG RESPONSE TO "BWR/4 PROPOSED ADDITIONAL CONDITIONS" (Enclosure 2)

Scope: "The assessment considered all Tech Spec end states resulting in a cold shutdown (Mode 4). The analysis then evaluated an alternate end state of remaining in hot shutdown (Mode 3) as a preferred alternative to Mode 4. Other potential preferred alternatives, such as low power operation, were outside the scope of this study."

Based on staff review - TS 3 0.3 end states were considered in this review although it was not specifically discussed in Introduction/Background CEOG did not propose changes to TS 3.0.3 end states.

Response:

See responses to RAI 17 and RAI 23.

3.4.3 Safety/Relief Valves

Proposed Modification: Delete Required Action B.2 and add Condition C with Required Actions C.1 and C.2 to address three or more required SRVs inoperable.

Comment: No discussion of proposed Condition C. Proposed TSTF change?

Response:

See response to RAI 23.

3.5.1 ECCS System (Operating)

Proposed Modification: Delete Required Action B.2. Renumber Condition H (and Required Action H.1) to Condition I (and Required Action I.1). Renumber Condition G (and Required Actions G.1 and G.2) to Condition H (and Required Actions H.1 and H.2) and remove the "OR" condition. Add a new Condition G that is similar to the existing Condition G but with the first condition ("Two or more ADS valves inoperable") deleted and Required Action G.2 deleted.

Comment: Deleting requirement G.2 does not appear to be risk-informed Proposed TSTF change?

Response:

See responses to RAI 17 and RAI 23.

3.5.3 RCIC System

Proposed Modification: Delete Required Action B.2.

Comment: Doesn't meet the definition of end state as discussed in the background section of the topical report

Response:

See responses to RAI 17 and RAI 23.

3.6.1.6 Low-Low Set (LLS) Valves

Proposed Modification: Delete Required Action B.2 and add Condition C with Required Actions C.1 and C.2 to address two or more LLS valves inoperable.

Comment No discussion of proposed Condition C. Proposed TSTF change?

Response:

See response to RAI 23.

3.6.1.7 Reactor Building-to-Suppression Chamber Vacuum Breakers

Proposed Modification: Modify Condition E to relate only to Condition C and delete Required Action E.2. Add Condition F with Required Actions F 1 and F.2 to address the required actions related to Conditions A, B, and D.

Comment: No discussion of proposed Condition F. Proposed TSTF change?

Response:

See response to RAI 23.

3.6.1.8 Suppression Chamber-to-Drywell Vacuum Breakers

Proposed Modification: Delete Required Action C.2 and add Condition D with Required Actions D.1 and D.2 to address Condition B.

Comment: No discussion of proposed Condition D. Proposed TSTF change?

Response:

See response to RAI 23.

3 6.2.3 Residual Heat Removal Suppression Pool Cooling

Proposed Modification: Delete Required Action B.2 and add Condition C with Required Actions C.1 and C.2 to address two RHR suppression pool cooling subsystems inoperable.

Comment: No discussion of proposed Condition C. Proposed TSTF change?

Response:

See response to RAI 23.

3 7.2 Plant Service Water System and Ultimate Heat Sink

Proposed Modification: Delete Required Action E.2 and add Condition F with Required Actions F.1 and F.2 to address the remaining portion of Condition E.

Comment· No discussion of proposed Condition F. Proposed TSTF change? STS Rev. 2 different than STS Rev. 1 (so Conditions do not match).

Response:

See response to RAI 23.

3 7.4 Main Control Room Environmental Control System

Proposed Modification: Delete Required Action B.2. Change Required Action D.1 to "Be in Mode 3" with a Completion Time of "12 hours."

Comment. STS Rev. 2 different than STS Rev. 1 (so Conditions do not match).

Response:

See response to RAI 23.

3 8.4 DC Sources

Proposed Modification: Delete Required Action B.2.

Comment: STS Rev. 2 different than STS Rev 1 (so Conditions do not match).

Response:

See response to RAI 23.

Similar comments on proposed changes to BWR/6.

Response:

See responses to RAI 17 and RAI 23.

ADDITIONAL RAI RELATED INFORMATION

With the resolution of the RAI's, the final report in the last section (Section III) has been updated. Also, the following additional information (see the next 8 pages) was submitted to the NRC staff by BWROG after several teleconferences regarding the inquiries raised from BWROG's responses to RAI number 9. As the result of the teleconferences and the submitted information, the NRC subsequently incorporated the following areas of the SER (in Section I):

- 11th bullet on Page 13 of the SER.
- 2nd and 3rd bullets on Page 28 of the SER.
- Commitment #1 on Page 59 of the SER.

On June 27, 2002, the RITS committee of the BWROG and the NRC held a telephone call concerning RITS Initiative 1 (Technical Specification End States). In this call, the NRC confirmed that the Mode 3 PRA analysis in NEDC-32988, Technical Justification to Support Risk-Informed Modification to Selected Required Action End States for BWR Plants, contained an assumption that the plant would be operating at a reduced pressure. The assumed pressure was not a fixed value, but a range between the lowest pressure that HPCI would remain available and pressure below which Feedwater would not be able to operate. A qualitative value of "below 500 psi" was agreed upon in the telephone call as a representative pressure range.

The NRC asked what controls were in place to ensure that a plant that chose to use this initiative would reduce pressure below 500 psi when in Mode 3, thus ensuring that the plant was being operated in accordance with the assumptions in the PRA analysis. The BWROG response was that physical processes would limit the time that a BWR could remain at higher pressures once the reactor is shut down, so that it was not necessary to add this new restriction to the Technical Specifications. The BWROG took an action to conduct a survey of US BWR plants to determine how long each plant can maintain reactor pressure above 500 psi during Mode 3. Most respondents stated that they could maintain this pressure for a maximum period of up to 24 hours. Two responses indicated that the plant could remain at high pressure for several days. In general, plants with motor driven Feedwater pumps could maintain pressure above 500 psi for a longer time (12 hours and greater), while plants with steam driven feedwater pumps could only keep pressure high for a few hours (less than 12 hours).

The survey asked the plants to assume that HPCI and RCIC systems were in standby and that the Feedwater system was providing makeup. In addition, they were to assume that the MSIVs were open and the condenser was being used as the heat sink.

These results were provided to the NRC in a telephone call on August 6, 2002. Because some Boiling Water Reactors with motor driven Feedwater pumps have the ability to operate in Mode 3 at high pressure for an extended period of up to several days, the NRC requested the BWROG to justify why operating at high pressure would not significantly alter the results in the original PRA analysis. The BWROG has concluded that while this operating condition is different than what was assumed in the Mode 3 PRA, changing the assumptions to cover this condition would not significantly alter the Mode 3 PRA results.

There are three Mode 3 PRA assumptions that are affected:

1. Because the plant is at high pressure, Medium LOCA, Large LOCA, and Inadvertent Open Relief Valve cannot be eliminated as initiators
2. Because Feedwater is operating, any reductions in the Loss of PCS initiating event frequency due to Feedwater being secured are not applicable
3. Because Feedwater is operating, there is an additional means of providing core cooling at high pressure for Small LOCA and Loss of PCS initiating events.

Changes 1 and 2 would cause a small increase in CDF, while change number 3 would result in a CDF decrease.

The change in initial conditions does not affect the Loss of Offsite Power or Loss of Service Water event trees. In both of these trees, the initiator causes an isolation of the steam path to the condenser and a loss of flow from the Condensate system. The isolation of the steam lines causes the reactor pressure to increase, so these sequences actually begin with a high pressure initial condition. The loss of Condensate flow will cause failure of the Feedwater flow, so the additional system cannot be given any credit in these events. Operation with Feedwater injection at high pressure does not affect the frequencies of these initiators.

The Small LOCA event can take credit for the additional high pressure injection source. The change would be very small, however, because the CDF associated with this event is dominated (greater than 99%) by failure of the containment heat removal function. Because Small LOCA events make up only about 1.6% of the Mode 3 operation CDF, a very small reduction in these sequences would not have a significant affect on the results of the study.

The Loss of PCS event can also take credit for the additional high pressure injection source. However, this is offset by the increase in the frequency of the Loss of PCS events due to potential problems with the Feedwater system. The net effect is approximately a 1.5% increase in CDF.

In the original Mode 3 study, Inadvertent Open Relief Valve (IORV) sequences were not considered credible because of the low operating pressure in the reactor vessel. If the reactor is operated at higher pressures, IORV events should be included in the analysis. An IORV event in Mode 3 would be similar to a Loss of PCS event. Based on our review, a net increase of 1.2% in CDF is expected due to this event in Mode 3.

In the original Mode 3 study, Medium and Large LOCA sequences were not considered credible because of the low operating pressure in the reactor vessel. If the reactor is operated at higher pressures, Medium and Large LOCA events should be included in the analysis. NUREG/CR-5750 reports frequencies of 4×10^{-5} and 3×10^{-5} per year respectively for Medium and Large LOCAs.

In the Medium LOCA, Feedwater is assumed to be insufficient as a high pressure injection source. HPCI would need to provide flow for a few minutes while the reactor depressurized. If HPCI was not successful, depressurization could be accomplished by the SRVs. Low pressure injection could be provided by either the LPCI or the LPCS systems. In addition, containment heat removal would be required for all sequences. Using the NUREG/CR-5750 initiator frequency and cutsets generated in the original study for the credited systems, the CDF associated with Medium LOCA events is estimated to be 3.6×10^{-9} per year, which would be a 0.2% increase over the low pressure case.

In the Large LOCA, Feedwater is also assumed to be insufficient as an injection source. The large break would quickly cause the reactor pressure to be reduced to a point where low pressure injection sources could provide core cooling. Low pressure injection could

be provided by either the LPCI or the LPCS systems. In addition, containment heat removal would be required for all sequences. Using the NUREG/CR-5750 initiator frequency and cutsets generated in the original study for the credited systems, the CDF associated with Large LOCA events is estimated to be 2.1×10^{-9} per year, which would be a 0.1% increase over the low pressure case.

The overall increase in Mode 3 CDF due to operating at high pressure with Feedwater providing level control versus operating at lower pressure with Condensate providing level control is about a 3% increase. This small increase does not represent a significant change to the original results.

In addition to changes in CDF, another consideration for operating in Mode 3 at high pressure is a potential for an increase in Large Early Release Frequency (LERF). NEDC-32988 (Rev. 2) provided the following justification for not quantifying LERF for Modes 3 and 4:

> ***4.4.3.5 LERF***
> The quantitative assessment did not calculate or compare Large Early Release Frequency (LERF) for several reasons. During full power operation (Mode 1), the large early radioactive releases are a result of (1) energetic containment failure due to a high pressure core melt, (2) a containment bypass event and (3) a core damage event occurring in combination with an unisolated containment. The likelihood of a large early release in Modes 3 and 4 is very low. This is due to the combined impact of the lower initial energy level, reduced fission product inventory level and decay heat load compared to full power. These factors serve to provide time for the operator to respond to serious plant upsets and, consequently, contribute to delaying the core melt progression and reducing radiation releases.

The operating pressure in Mode 3 does not affect the fission product inventory or the decay heat load, so these factors will not change. The initial energy level refers to the thermal energy stored in the reactor vessel and internals, the fuel, and the water in the primary system at the time of the initiating event. When operating at low pressure in Mode 3, the reactor will initially re-pressurize following the initiating event. Only then will water level begin to drop. Once water level begins to fall, the rate is nearly independent of the initial reactor pressure; therefore the required time to perform actions directed by the Emergency Operating Procedures (EOP), i.e. the time between the cue and the time the action needs to take place, is not affected by the initial pressure. Because of this, the initial operating pressure in Mode 3 will not affect LERF.

As described above, there are no changes to the LOSP, LOSW, and Small LOCA analyses; therefore there is no affect on LERF for these initiators. The changes to the Loss of PCS analysis do not add any core damage sequences in which the core failure occurs when the reactor is at high pressure. In fact, the reduction noted in the Loss of PCS analysis is one of the high pressure core damage events. In the IORV, Medium LOCA, and Large LOCA sequences, core damage occurs when the reactor is at low pressure. The potential for containment bypass does exist in the Medium and Large

LOCA events due to Torus to Drywell vacuum breaker failure, however the event frequency for these LOCAs is very small ($7x10^{-5}$ per year) and the vacuum breakers are very reliable. Based on IPE submittals for plants with Mark I containments, the conditional failure (to close) probability for the vacuum breakers given a LOCA is estimated to be $1x10^{-5}$. The proposed Technical Specification changes do not affect this failure mode. The proposed changes do allow Mode 3 operation if one vacuum breaker is not able to open. Because several other vacuum breakers remain capable of performing this function, the overall reliability is not changed.

The proposed Technical Specification changes also will allow Mode 3 operation if Primary Containment is unavailable. As stated in NEDC-32988, the proposed change allows repairs of the primary containment to be made in a plant operating mode with lower risks than full power operation and without challenging the normal shutdown systems. After repairs are made, the plant can be brought to full power operation with the least potential for transients and operator error. Because the CDF of high pressure Mode 3 is nearly the same as low pressure Mode 3, operating pressure has a negligible affect on this conclusion. Due to these considerations, the BWROG has concluded that LERF is not affected by operating at high pressure in Mode 3.

The last consideration for operating in Mode 3 at high pressure is radioactive release in excess of Technical Specification limits. This concern arises because some of the proposed changes allow Mode 3 operation without some of the radioactive release mitigation systems, i.e. the Main Steam Isolation Valves (MSIV) Leakage Control System (LCS). Although this type of leakage is typically not considered a figure of merit for risk informed applications, defense-in-depth principals require this to be considered. NEDC-32988 provided the following basis for operating in Mode 3 with the MSIV LCS inoperable:

> Basis for Proposed Change
> This system is not significant in BWR PSAs and, based on a BWROG program, many plants have eliminated the system altogether. Going to Mode 4 for the specified inoperable conditions would cause loss of both high pressure steam-driven injection systems, loss of the Power Conversion System (condenser/feedwater system), and require activating the RHR System. Based on the low risk significance and the number of systems available in Mode 3, it is concluded that the risks of staying in Mode 3 are lower than or equal to going to the Mode 4 end state.
>
> Defense-in-Depth Considerations
> The proposed change allows repairs of the MSIV LCS subsystem to be made in a plant operating mode with lower risks than full power operation and without challenging the normal shutdown systems. After repairs are made, the plant can be brought to full power operation with the least potential for transients and operator error.

The MSIV LCS supplements the isolation function of the MSIVs by processing the fission products that could leak through the closed MSIVs after a LOCA. The probability of a LOCA is reduced due to the short amount of time in Mode 3. In addition, for this event, the SGTS would be available to filter fission products prior to their release to the environment.

Further, the proposed mode allows the use of feedwater/condensate for reactor water makeup and cooling. If a transient or accident should occur during this mode, the steam-driven HPCI and RCIC Systems are available for water makeup, provided sufficient decay heat is available to sustain the Mode 3 condition. In addition, EPGs and EOPs direct the operator to take control of the depressurization function if low pressure injection/spray systems are needed for water makeup and cooling.
Because the high pressure Mode 3 risk is nearly the same as low pressure Mode 3 risk, this basis is not affected. NEDC-32988 provides similar justification for other radioactive release mitigation systems, none of which would be affected by the operating pressure in Mode 3.

Most of the proposed changes are associated with current Technical Specification Actions that direct the plant to be in Mode 4 thirty six hours following the entry condition. The only restriction is that Mode 3 is achieved within twelve hours following the entry condition and the cool down rate of the reactor. Following these restrictions, it is possible under current Technical Specifications for a BWR to operate in Mode 3 at high pressure for up to approximately thirty three hours. Therefore, as long as the risk associated with operating in Mode 3 at high pressure is not significantly above the risk of operating at low pressure, the proposed change without any pressure limitations is consistent with the implementation of current Technical Specifications.

Finally, the BWROG would like to emphasize that the primary purpose for a plant to go into Mode 3 under these proposed changes is to repair the inoperable system. While the specification does not provide a time requirement for the repair, practicality will ensure that repair of the inoperable system will be one of the plant's top priorities. The plant will not be able to resume power operation until that system is repaired. This practicality will ensure that the plant is not operated indefinitely at high pressure with the affected system inoperable.

The BWROG concludes that there is no need to add any specific requirements relating to how soon the plant has to be brought below 500 psi while it is Mode 3 to carry out repairs as proposed by the Technical Specification Initiative on end states.

The BWROG response to RAI #9 will be revised as follows:

9. One of the steps in developing the Mode 3 and 4 PRA models (listed on page 4-5) involved the identification of initiating events (IEs). However, the selected IEs are listed on page 4-6 without adequate explanation on how they were derived. This information is needed to ensure that all relevant IEs have been considered. An acceptable approach is to start with an initial "generic" list (which includes all postulated types of IEs) and screen out those that either do not apply in Modes 3

and 4 or are unimportant based on bounding qualitative arguments Please provide this information

Response:

Sandia National Labs did a very detailed study of shutdown risk in NUREG/CR-6143 (SAN93-2440), "Evaluation of Potential Severe Accidents During Low Power and Shutdown Operation at Grand Gulf, Unit 1." In this study, a number of initiators were considered initially, and based on the detailed analysis many were ruled out. These initiators are compared to the initiators in the BWROG report, NEDC-32988.

The NUREG/CR-6143 study uses seven Plant Operating States (POS) to define the various states of the plants, whereas in the BWROG report two operating modes (Mode 3 and Mode 4) are investigated. None of the seven POS in the NUREG are completely identical to either Mode 3 or 4. However, some comparisons can be made, as discussed below.

In the BWROG report, the Mode 3 plant state is defined as the steady state condition with RPV pressure somewhat above the level where RHR is normally engaged in SDC mode. In this mode, the reactor cooling is performed by the power conversion system (feed water pumps are secured and condensate system is used for reactor cooling function). Mode 3 is essentially equivalent to Plant Operating State 3 (POS 3) in NUREG/CR-6143. However, in the Sandia study, the initiating events and configuration of mitigating systems for POS 3 are assumed to be similar to full power operation and the following 12 initiators are identified.

1. Loss of Offsite Power (LOSP)
2. Transient with loss of Power Conversion System (PCS)
3. Small LOCA at Low Pressure
4. Loss of all Plant Service Water
5. Transient with PCS initially available
6. Transient involving loss of Feedwater
7. Transient caused by Inadvertent Open Relief Valve (IORV)
8. Large LOCA at Low Pressure
9. Intermediate LOCA at Low Pressure
10. Small-small LOCA at Low Pressure
11. Loss of all Turbine Building Cooling Water
12. Loss of Instrument Air

The first four initiators also are considered as initiating events for Mode 3 operation in the NEDC-32988 report.

The fifth initiator "Transient with PCS initially available" and the sixth initiator "Transient involving loss of Feedwater" are not specifically identified, but are subsumed into the Loss of PCS initiation event Mode 3.

The frequency of IORV is expected to be very low if the plant is operating at low pressure in Mode 3. If the plant was operated at high pressure, IORV events would be possible, but sensitivity analyses performed by the BWROG have shown that including IORV would not change the results. Therefore, the seventh initiator is not included in Mode 3 operation.

The eight and ninth initiators are not considered in Mode 3 operation, because the frequencies of large and intermediate LOCA at Low Pressure are expected to be very small. NUREG/CR-5750 estimates the frequency of large LOCA (break greater than 5-inch diameter piping) and intermediate LOCA, to be 4E-5 and 3E-5 per year respectively, for the full power conditions. Since the pressure and energy levels associated with Mode 3 are significantly lower than for normal power operation, the large and intermediate LOCA frequencies are expected to be even smaller than for normal power operation. Therefore, large and intermediate LOCA are not included as initiating events for Mode 3 operation. Sensitivity analyses performed by the BWROG have demonstrated that including intermediate and large LOCA would not alter the results of the Mode 3 analysis.

The tenth initiator "Small-small LOCA at low pressure" is included in the "Small LOCA at Low Pressure " initiating event for Mode 3 operation.

The eleventh initiator "Loss of all Turbine Building Cooling Water," though not specifically identified, is subsumed in Loss of Service Water initiation frequency.

The Loss of Instrument Air initiator is not expected to contribute any significant plant risk and therefore, is not included in the initiator list of Mode 3 operation.

The four initiators that are selected for Mode 3 operation are as follows:

1. Loss of offsite power
2. Loss of power conversion system
3. Small loss-of-coolant accident
4. Loss of service water

The Mode 4 plant state is defined as the steady state condition with coolant temperature below 212°F. The vessel head remains tensioned. Reactor cooling is performed by one RHR loop in SDC mode. There is no POS that is identical to Mode 4. However, it is judged that Mode 4 is essentially equivalent to a combination of Plant Operating State 4/5 (POS 4 and POS 5) in the NUREG/CR-6143 report.

In NUREG/CR-6143 initially, 34 events are considered as initiating events in POS 5. Many of these contribute very little to the total plant core damage frequency (CDF). Ten of these 34 initiators each contribute 1% or more to CDF and each of the following five initiators contribute 10% or more to plant CDF:

1. Loss of offsite power

2. Large LOCA during non-hydro conditions
3. Intermediate LOCA during non-hydro conditions
4. Large LOCA during hydro conditions
5. Intermediate LOCA during hydro conditions.

The "Loss of Offsite Power" initiator is included in both the NEDC-32988 study as well as the NUREG report.

Large and intermediate LOCAs during non-hydro conditions are not expected to contribute significantly to plant CDF. As noted earlier, NUREG/CR-5750 estimates the frequency of large LOCA and intermediate LOCA to be 2.5E-5 and 2.3E-5 per year respectively for the full power conditions. Since the pressure and energy levels associated with Mode 4 conditions are significantly lower than for normal power operation, the large and intermediate LOCA frequencies are expected to be even smaller than for normal power operation. Therefore, large and intermediate LOCA during non-hydro conditions are not considered as initiating events for Mode 4 operation

In the NEDC-32988 report, it is assumed that the purpose of being in Mode 3 or 4 is to perform the needed repair for removing the LCO and not to carry out other repairs or maintenance tasks. Therefore, hydro test is not relevant in MODE 4 operation and large and intermediate LOCA during hydro conditions are not appropriate initiators for MODE 4 operation.

In addition to "Loss of Offsite Power" initiator, three more initiating events were selected for evaluation in the Mode 4 PRA based on potential contribution to CDF. All four initiating events are listed below:

1. Loss of Offsite Power
2. Loss of RHR SDC Loop
3. Small Loss-of-Coolant Inventory
4. Loss of Service Water

In summary, based on the discussion above, we believe that the Mode 3 and Mode 4 PRA models include all initiating events that are potentially significant contributors to CDF.