Radiation Damage and Deformation

S.J. Bushby / N. Christodoulou
Manager / Senior Scientist, Deformation Technology Branch

Meeting with the USNRC and CNSC

2002 December

AECL TECHNOLOGIES INC.

FUEL CHANNEL COMPONENTS

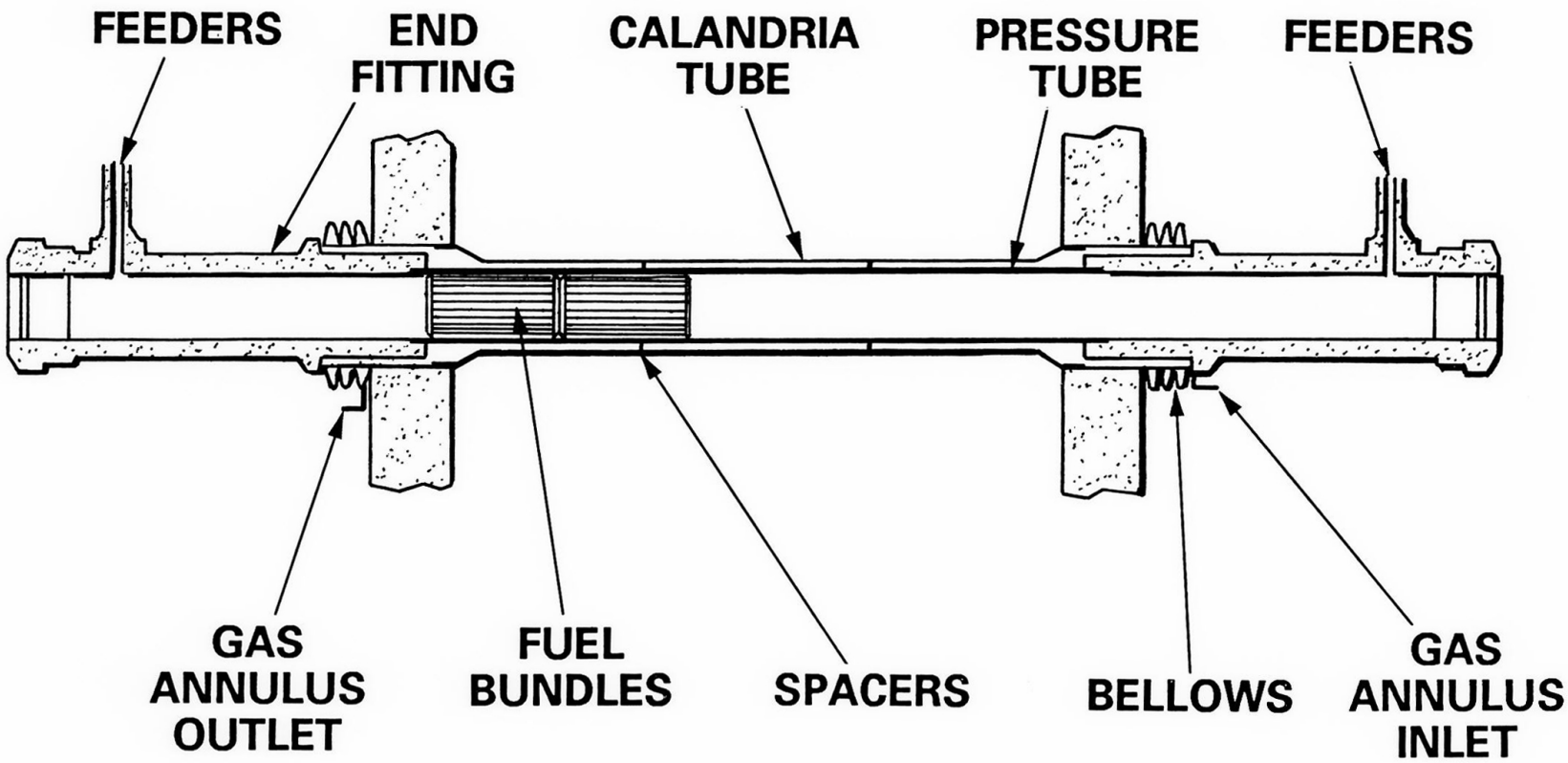

Fuel Channel Deformation

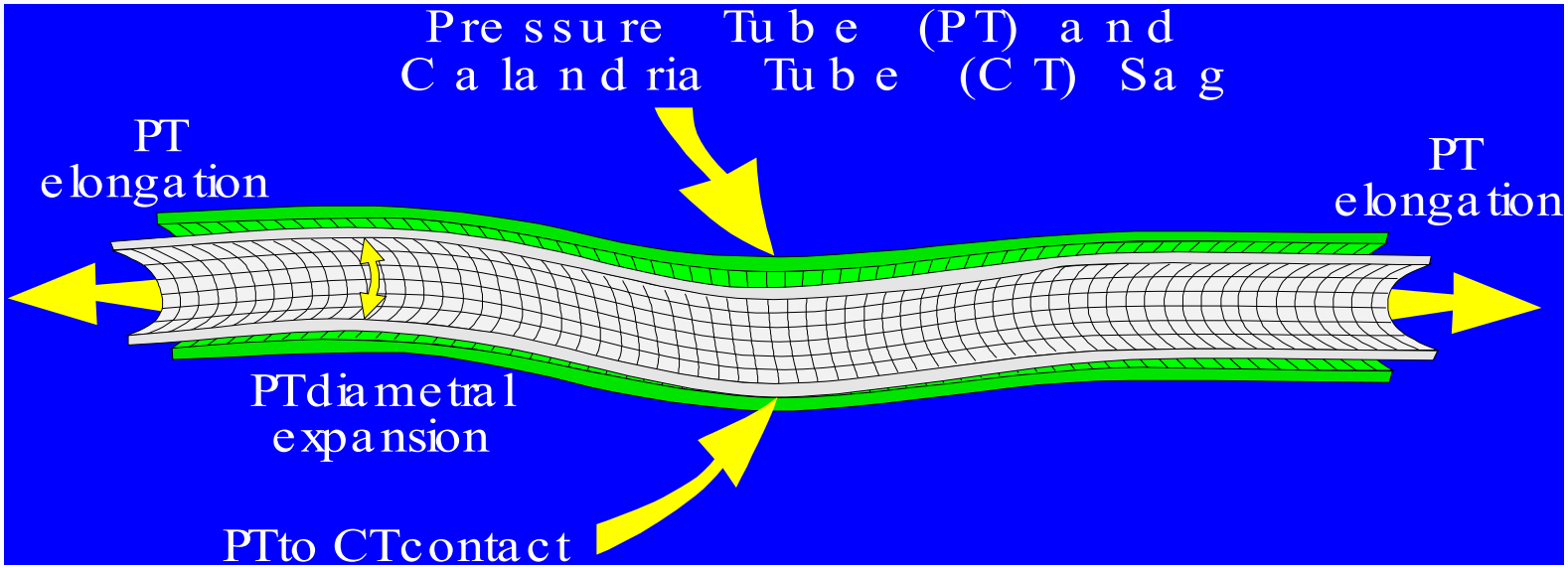

Not to scale. Typical sag deflection greatly exaggerated (~ 1´´ over 240 ´´)

Deformation-Related Program Support Areas

- End-of-life Predictions
  - Diametral strain,
    - Flow by-pass affects critical heat flux (CHF)
    - Creep ductility
  - Elongation
    - Bearing travel
    - Feeder stresses
  - Sag
    - PT/CT contact (potential for hydride blister formation)
    - Contact with reactivity devices

Deformation Equation

- Deformation of irradiation-hardened Pressure Tube material consists of:
  - Thermal creep (σ,T)
  - Irradiation growth (ϕ,T)
  - Irradiation creep (σ, ϕ, T)

- Equation predicts <u>average</u> behaviour based on:
  - Inspection data from operating power reactors
  - Test-reactor data
  - Theoretical models
    - Material crystallographically anisotropic (hexagonal closed-packed grains)

Deformation Equation Development

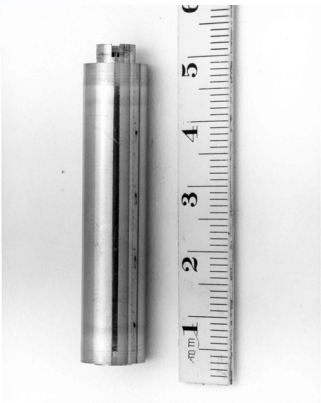

Improved material and fabrication routes

$$\dot{\varepsilon}_d = \dot{\varepsilon}_d^{thermal\,creep} + \dot{\varepsilon}_d^{irrad'n\,creep} + \dot{\varepsilon}_d^{irrad'n\,growth}$$

where

$$\dot{\varepsilon}_d^{thermal\,creep} = [K_1 C_1^d \sigma_1 + K_2 C_2^d \sigma_2^2].e^{-Q_1/T} + K_3 C_1^d \sigma_1 .e^{-Q_3/T}$$

$$\dot{\varepsilon}_d^{irrad'n\,creep} = K_c.K_4(x).C_1^d(x).\sigma(x).\phi.e^{-Q_4/T}$$

$$\dot{\varepsilon}_d^{irrad'n\,growth} = K_g.K_6(x,\phi t).C_6^d(x).\phi.e^{-Q_6/T}$$

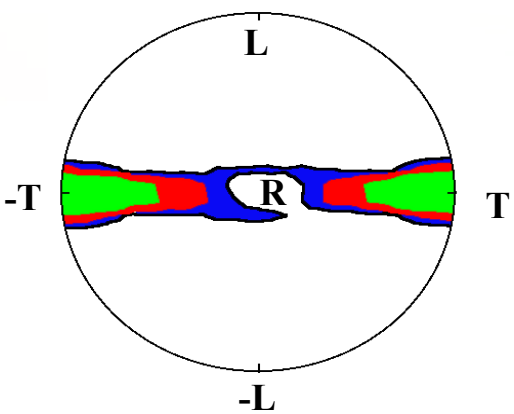

Reactor Data

Pressure Tube Deformation Equation

$$\dot{\varepsilon}_d = \dot{\varepsilon}_d^{thermal\,creep} + \dot{\varepsilon}_d^{irrad'n\,creep} + \dot{\varepsilon}_d^{irrad'n\,growth}$$

where

$$\dot{\varepsilon}_d^{thermal\,creep} = [K_1 C_1^d \sigma_1 + K_2 C_2^d \sigma_2^2].e^{-Q_1/T} + K_3 C_1^d \sigma_1.e^{-Q_3/T}$$

$$\dot{\varepsilon}_d^{irrad'n\,creep} = K_c.K_4(x).C_1^d(x).\sigma(x).\phi.e^{-Q_4/T}$$

$$\dot{\varepsilon}_d^{irrad'n\,growth} = K_g.K_6(x,\phi t).C_6^d(x).\phi.e^{-Q_6/T}$$

Factors Affecting Pressure Tube Strain

- **Main Correlations with Strain:**
  - Ingot effect
  - Crystallographic texture
  - Chemical composition of material (particularly oxygen)
  - Grain structure
  - Extrusion parameters

- **Using these correlations, the design requirements for ACR will be met**

Measured vs. Predicted Diam. Strain

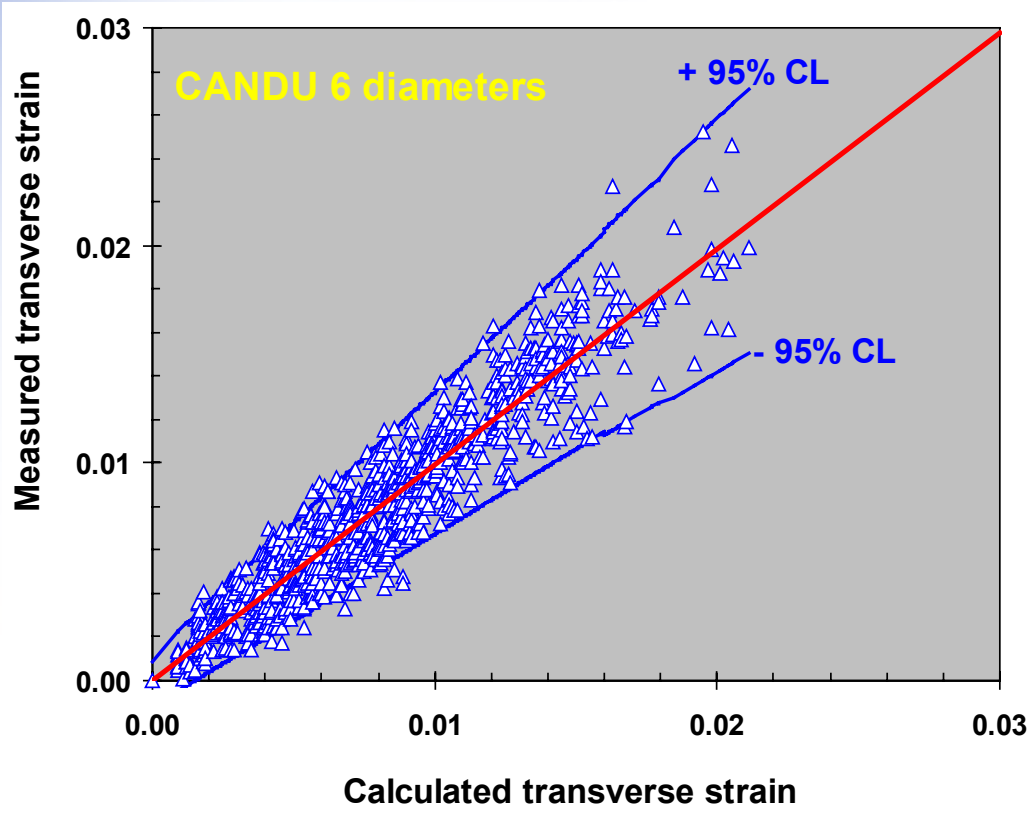

- Material variability used in predictions is conservative
- Includes pressure tubes manufactured for all reactors
- For ACR:
  - Improve tube specifications using correlations
  - Better control of manufacturing parameters

Tube-to-tube variance in ACR will be reduced

Distribution of Diametral Strain in C6

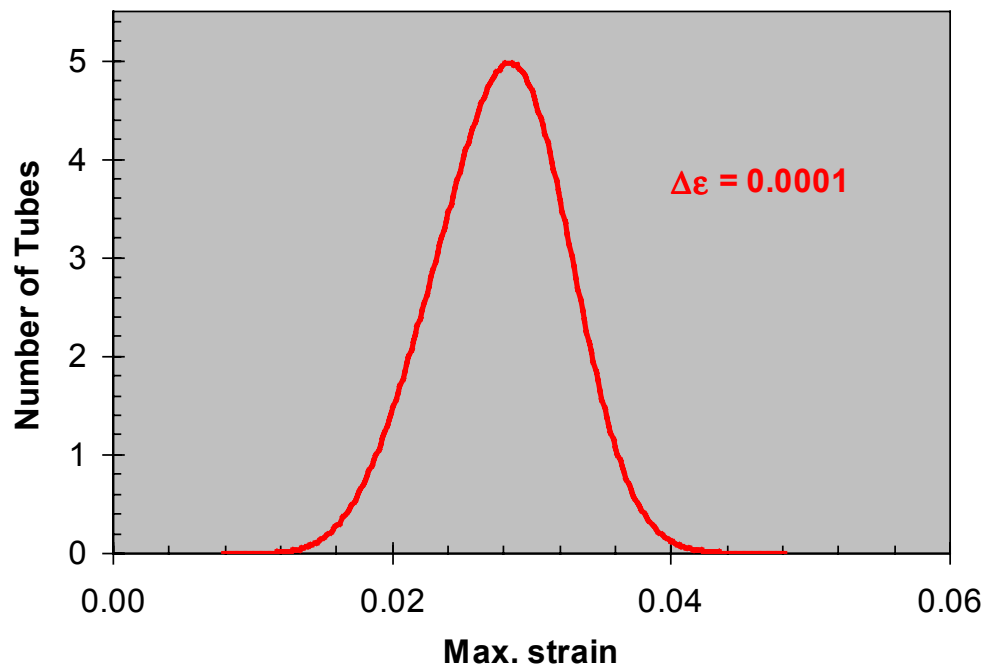

- Material variability convoluted into strain predictions from deformation equation
- Distribution reflects all 380 PTs in a CANDU 6
- Utilize Probabilistic Methods

Creep Ductility

- Current design allows for deformation of up to 6%

$$\dot{\varepsilon} = C\sigma^{n}$$ Power law

- Under irradiation n = 1 for Zr-2.5Nb
- Results from lab tests indicate design allowance is conservative
- From microstructural investigations of reactor specimens, there is no evidence of:
  - Necking
  - Change in Matrix stability
  - Creep relaxation at grain boundaries
  - Void formation
  - Concentration of trace elements
- Experiment ongoing at high flux irradiation facility (Osiris) to further verify creep ductility

Creep ductility of Zr-2.5Nb

Material Condition	Hoop Stress (MPa)	Test T (K)	Flux (E > 1 MeV) (x 10^{17}n/m^2/s)	Time on test (h)	Creep Strain (%)	s-s creep rate (h^{-1})
42% CW, SR 72 h @ 675 K	432	571	2.2	28691	6.2	2.2×10^{-4}
	459			16286	6.0	3.7×10^{-4}
	461			33070	6.1	1.8×10^{-4}
	481			6990	5.9	8.4×10^{-4}
	489			36429	17.6	4.8×10^{-4}
	495			33070	8.2	2.5×10^{-4}

- Much higher stresses than normal operating conditions (n > 1)
- Experiments terminated when no failures detected
- Data on Zr-2.5Nb from the Fugen reactor show similar results

Stress Dependence of In-reactor Creep Rate

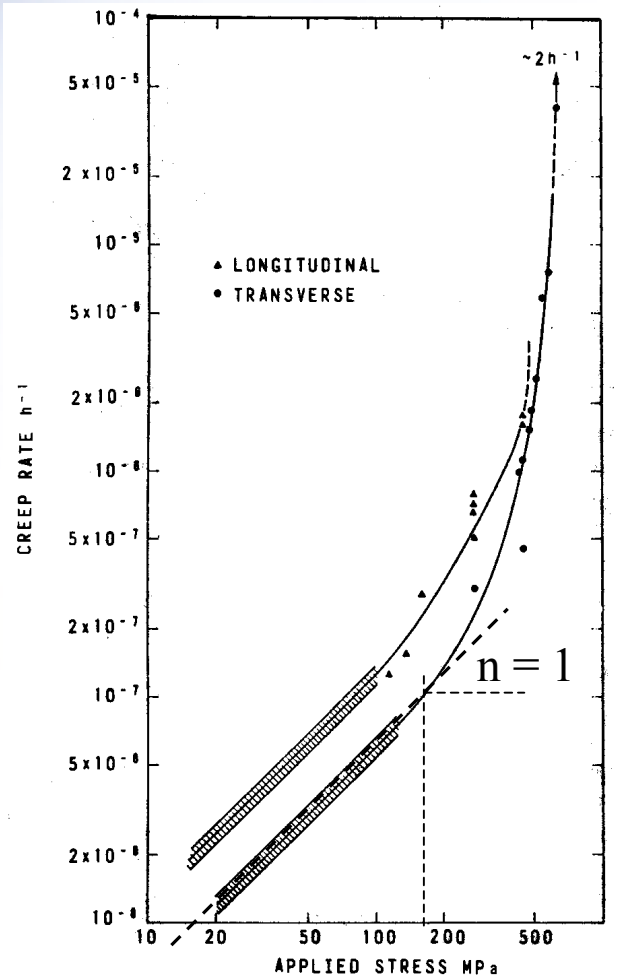

T = 570 K, data normalised to 1×10^{17} n/m^2/s (E > 1 MeV)

$\therefore$ for $\sigma \leq 170$ MPa, n = 1

From classical treatment of flow localization,

$$\dot{a} = \left(\frac{A}{a}\right)^{n-1} \dot{A}$$

$\therefore$ when n = 1, no neck propagation

C.E. Coleman et al., J. Nuc. Mater., 60(1976)185.

Pressure Tube Elongation

- Accommodate elongation through bearings – switch free/fixed ends at half life
- Bearing travel, feeder stress analysis

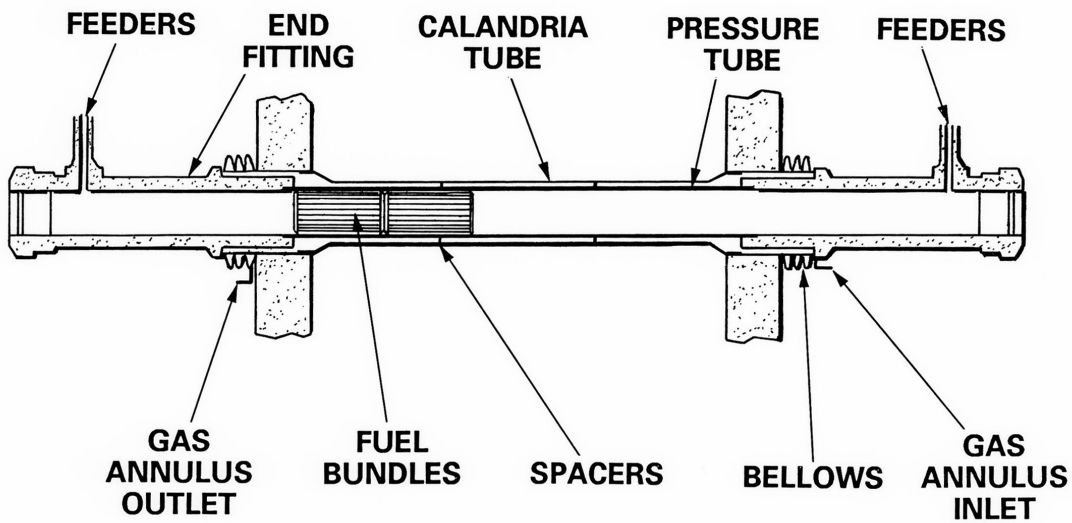

Measured & Predicted Elongation in CANDU 6 Units

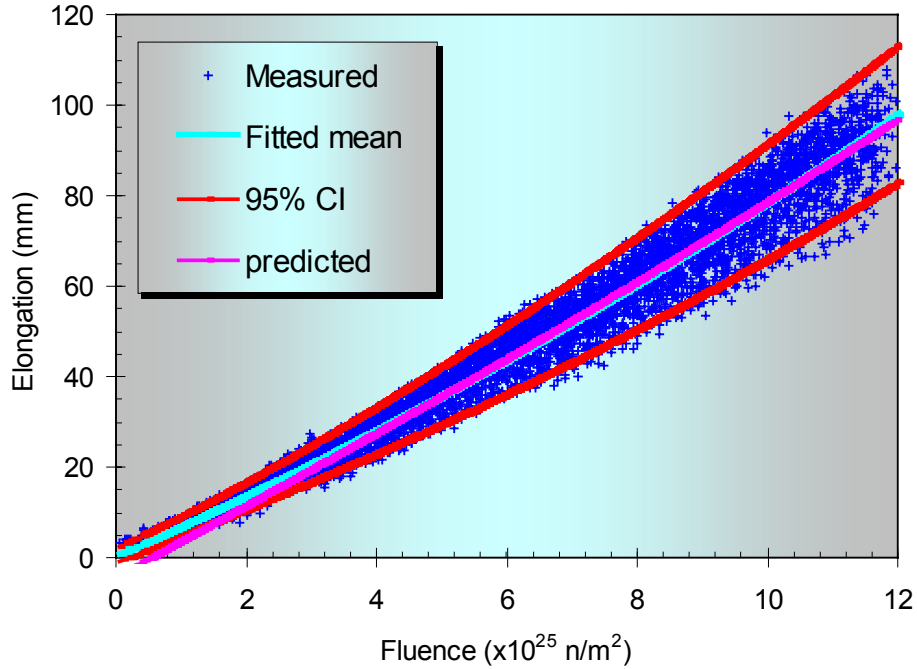

- **Elongation will meet ACR design requirements through material specifications**

Irradiation Growth of Calandria Tube

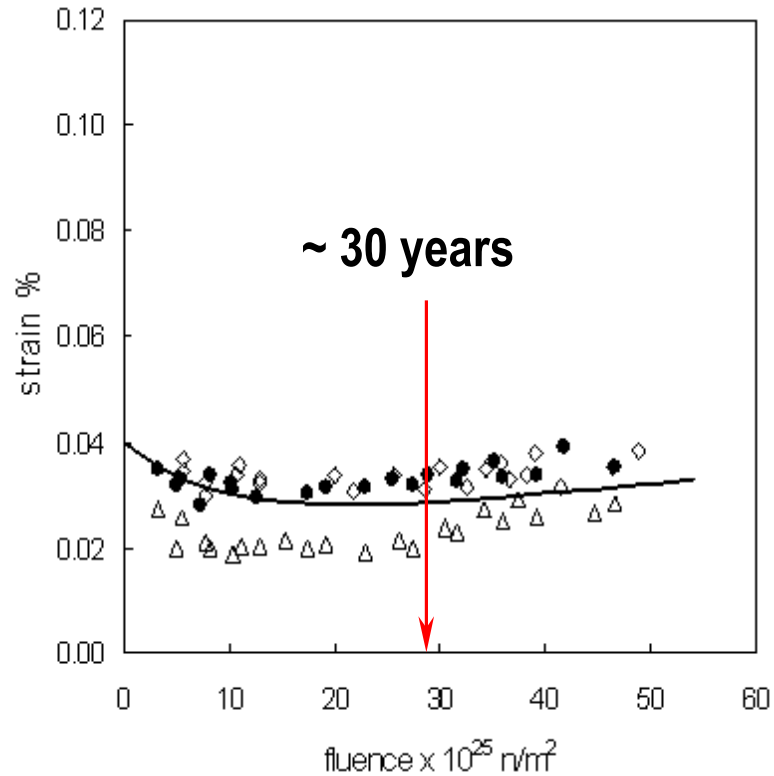

- Magnitude of growth strain very small – no concerns with buckling
- No accelerated growth, so no expectation of increase in irradiation creep

Pressure Tube Sag

- Fuel Channel deflection dominated by Calandria Tube sag
- Thicker, stronger Calandria Tube in ACR
- Pressure Tube/Calandria Tube contact depends on gap, spacer location and Pressure Tube deformation
- Larger gap in ACR

ACR R&D Program Objectives

- Further Validate the deformation equation at ACR conditions
  - Magnitude of creep and growth terms (Osiris)
  - Apportioning between irradiation and thermal creep (Osiris and NRU)
- Validate correlations available to reduce deformation rates and minimize variability; e.g.
  - Chemical composition of material
  - Grain structure
  - Extrusion parameters
- Provide data to manufacturing qualification program

Summary

- AECL has an extensive knowledge of in-reactor deformation
- The equations developed predict well the deformation behaviour of fuel channels in CANDU units
- Predictions of ACR deformation by these equations indicate:
  - No PT/CT contact , i.e. no blister formation
  - Sag of fuel channel will be within acceptable limits
  - Creep ductility will be maintained over the design life
  - Material will be manufactured to meet diametral and elongation design requirements
- Test program has been established to further validate the equations and the magnitude of material improvements

AECL

TECHNOLOGIES INC.