EXHIBIT B

REPORT ON TEST
OF
MODEL B FRESH FUEL SHIPPING CONTAINER

PART A - MINOR DROP TESTS, SHIPPING & HANDLING TESTS

PART B - 30' DROP TESTS AND PIN DROP

TESTS PERFORMED BY

CONTAINER RESEARCH CORPORATION
Hallow Hill Road
Glen Riddle, Penna.

9508090216 950731
PDR ADOCK 07106206
C PDR

Part A of Exhibit B

MINOR DROP TESTS, SHIPPING AND HANDLING TEST

EXHIBIT B

PART A

TABLE OF CONTENTS

EXHIBIT B

1.0 PURPOSE:

The purpose of the test described herein are to verify conformance to BABCOCK & WILCOCK COMPANY Equipment Specification CS-3-83 dated 2/28/69 and Drawing Number 208R001. (The current drawings are PE-52F, PE-53F, and PE-54F).

2.0 CONCLUSIONS:

2.1 A complete series of tests was successfully performed with all design requirements adequately satisfied and with only a few minor changes resulting to improve reliability. These changes are described in detail under test results.

2.2 The tests were witnessed by BABCOCK & WILCOX Technical Representatives as well as CONTAINER RESEARCH CORPORATION Quality Control Personnel and it was concluded that the container will provide adequate protection for the fuel cells during normal shipment, handling, and storage.

3.0 RECOMMENDATIONS:

3.1 It is recommended that the Model B fresh fuel shipping container be granted approval for shipment of production fresh fuel cells.

4.0 CONTAINER DESCRIPTION:

4.1 The shipping container was designed for transportation of either one or two fresh fuel cells.

4.1.1 The cells are clamped securely to a frame suspended on 18 shockmounts. The frame is made up of two separate sections with the upper section capable of pivoting about one end to a vertical position in which the fuel cells are loaded and unloaded.

4.1.2 A series of hinged clamps (clamp bows) are used to secure the fuel cell to the frame prior to lowering the frame to a horizontal position. A suspension system lockout feature and storable external outriggers provide stability of the container during load/unload sequence.

4.1.3 There shall be a clamp bow to restrain each spacer grid and end fitting. The ratio of assembly weight to the number of clamp bows shall not exceed 168 lbs. Positioning the clamp bows on the spacer grids and end fittings provides for uniform restraint along the length of the fuel assembly. The spacer grids provide the support needed to maintain the fuel rods in position which is crucial in maintaining proper coolant flow, heat transfer, and reactivity control. The ratio of assembly weight to the number of clamp bows noted above is based on the number of clamp bows and the weight of the dummy fuel assembly used in the original as dropped configuration. Ten clamp bows were used to hold a 1680 lb. dummy fuel assembly during the original drop tests. This therefore yields a ratio of 168 lbs. per clamp bow which justified the use of less than 10 clamp bows provided as the dropped ratio of 168 lbs./clamp bow is not exceeded.

4.1.4 The basic container structure consists of .089 steel sheet skin and .124 steel flanged end plates. Sealing is achieved with structural steel angles 2 x 3 x 1/4". A 1/2" "O" ring type gasket is used between the container and closure lid. This gasket is placed in a fitted groove around the circumference of the container.

4.1.5 Two steel angles 3 x 3 by 3/8" attached to the base of the container provide reinforcement and forklift features as well as a means of attaching four (4) hardwood skids. Rollover angles and braces are also provided to reinforce certain areas of the base and cover.

4.1.6 Stacking features include four (4) brackets on the container cover which permit stacking like containers one directly above the other, as well as, side by side placement of two bottom containers with a third upper container straddling both in a pyramid manner.

4.1.7 Other features include a dessicant

basket, humidity indicator, dessicant access port, automatic/manual two way breather valve, four view ports (two each end) for inspection of mechanical accelerometers mounted to suspend frame, and an air filling valve at the opposite end of the container from the breather valve which may be used for inert gas purging.

4.2 PHYSICAL DATA:

CONTAINER SIZE: length = 205"
width = 44 1/2"
height = 47 1/4"

CUBAGE: cu. ft. = 250

AS TESTED WEIGHTS:

Container & Frame	3940-lbs.
Fresh Fuel Cells (2)	3000-lbs.
Gross (Shipping)	6940-lbs.

5.0 METHOD OF TEST:

5.1 GENERAL:

Two dummy fuel cells were provided by BABCOCK & WILCOX COMPANY for the purpose of conducting a series of tests.

Also provided were four (4) weights of 150 lbs. each. These were added internally to the dummy fuel cells increasing the weight of each to 1800 lbs. for additional tests.

5.1.1 An edgewise rotational drop from a height of eighteen (18) inches was then performed to test the ability of the container suspension system to withstand the increased loading.

5.1.2 A test procedure (CRC-PTP-3799) written by CONTAINER RESEARCH CORPORATION and approved by BABCOCK & WILCOX, approved deviations. The deviations are outlined below and described fully in detail in Section 7 under Container Modifications:

TEST PROCEDURE DEVIATIONS:

A) Hoisting Test - Electronic

Instrumentation was disconnected during this test due to the possibility of breaking the lead wires during handling and causing a delay in the shipping test schedule.

B) Shipping Test - This test was limited to a distance of 40 miles, which was performed in two segments. The first segment of 20 miles was performed over roads varying from smooth interstate highway to back country roads full of pot holes and bumps with a load of 34,700 lbs. added to the trailer bed simulating a load of five additional containers.

The second segment of the test was performed over the same course with the container and two (2) 1500 lbs. fuel cells only.

5.2 INSTRUMENTATION:

5.2.1 Three Piezo Electric Accelerometers were attached to the dummy loads and/or strongback portion of the suspension frame during drop tests and the shipping tests.

5.2.2 Five mechanical accelerometers (VEXILAR) permanently attached to the suspension frame were monitored during the tests and results compared with the piezo electric accelerometers. The VEXILARS are "Go-NO GO" type and are oriented to sense accelerometers in each axis (Vert., Lat., Long.) and must be reset manually when tripped. Two viewing ports at each end of the container permits examination of the VEXILARS without opening the container by use of a flashlight at one port and looking through the other.

5.2.3 The Vexilar Accelerometers are made to trip when shock levels in excess of their set points is reached. The trip level for each axis is as follows:

A) VERTICAL AXIS — 11 G's Tolerence of vexilars is ± 10%

B) LATERAL AXIS — 10 G's

C) LONGITUDINAL AXIS — 8 G's

5.2.4 Modeling clay was placed in critical areas of the container during tests to determine frame deflections as well as determining the exact length of deformable pin type deflection indicators, which will be attached at various locations on the frame during each shipment of fuel cells. The pins will be used to detect in conjunction with the VEXILARS, excursions and shock levels in excess of allowable levels which may have occurred in transit.

5.2.5 Calibration - The Piezo Electric Accelerometers and Associated Electronics were calibrated in accordance with MIL-C-45662A.

6.0 TESTS:

6.1 GENERAL:

Tests were conducted in accordance with CRC-PTP-3799 Rev. A Issue Date: 11/5/69 Preproduction Test Procedure. Data derived from each test requiring instrumentation is recorded on individual data sheets including accelerometer locations.

6.2 FLAT DROP: (with two 1500 lbs. dummy fuel cells)

6.2.1 The loaded container was raised and allowed to fall freely to the floor from a height of 10 inches to a concrete surface, landing flat on its bottom.

6.2.1.1 RESULTS: No Damage - Data Acceptable.

6.3 EDGE DROP: (with two 1500 lbs. dummy fuel cells)

6.3.1 One end of the container was supported by a 5 inch high block of wood placed at right angles to the skids. The opposite end was raised and allowed to fall freely to the floor from a height of 20 inches.

6.3.2 This test was applied to the opposite end of the container also.

6.3.2.1 RESULTS: No Damage - Data Acceptable.

6.4 CORNER DROP: (with two 1500 lbs. dummy fuel cells)

6.4.1 The container was supported at one corner of its base on a 5 inch high block with a 12 inch high block under the other corner at the same end. The opposite end corner "A" was raised and allowed to fall freely to the floor from a height of 12 inches and 24 inches. The cover was removed after the 24 inch drop and the contents were examined.

6.4.1.1 RESULTS: No Damage - Data Acceptable but the bottom corner of the frame had cut through the clay and marked the finish on the container skin. This is not considered serious since the shock level was within acceptable limits.

6.4.2 CORNER DROP: (with two 1500 lbs. dummy fuel cells)

6.4.2.1 This test performed in same manner as 6.4.1 with same results except corner "C" was impacted.

6.5 ROLLOVER TEST: (with two 1500 lbs. dummy fuel cells)

6.5.1 The container was tipped slowly over from its base to its left side, left side to top, top to right side, and right side to base for a total of 360 degrees.

6.5.1.1 RESULTS: No Damage - Data Acceptable.

6.6 IMPACT: (with two 1500 lbs. dummy fuel cells)

6.6.1 The container was suspended as a pendulum from four steel straps, pulled back until the center of gravity had been raised 18 inches above its rest position, and released to impact into a rigid barrier with the skids taking the full force of impact. This test was applied to the AFT END.

6.6.1.1 RESULTS: No Damage - Data Acceptable

6.6.2 The impact test was applied to the FWD END of the container also, but upon examination of the oscillograph trace it was discovered that although the pulse exhibited ideal characteristics such as, low amplitude (maximum of 8 G's), and normal duration (.120 seconds) there was a short duration spike (.005 seconds) riding the peak of the fundamental with an amplitude of two G's bringing the peak acceleration to 10 G's. This was an indication that something on the suspended mass had moved and bottomed out.

6.6.2.1 Upon inspection of the opened container it was determined that the screw jacks on the end gate of the frame had not been properly tightened against the end of the fuel cells. They had obviously been hung up on two or three threads, which were designed for retention of the screw jacks only and when the force from the fuel cells exceeded the strength of the threads, the threads stripped causing the fuel cells to shift until they were positively restrained by the load bearing threads. The end gate liner material was also changed at this time from cork to 60 DURO. NEOPRENE.

6.6.2.2 The container was closed and the impact test repeated with accelerometers relocated from the frame strongback to the top of the dummy fuel cells.

6.6.2.3 <u>RESULTS:</u> There was no damage and the data was within acceptable limits.

6.6.2.4 The corrective action for this condition will be to redesign the screw jack retention method. (See Section 6 CONTAINER MODIFICATIONS).

6.7 HOISTING TEST: (with two 1500 lbs. dummy fuel cells)

6.7.1 The container was lifted clear of the ground by attaching the lifting hook in each container lifting provisions separately for a total of four (4) lifts.

6.7.7.1 RESULTS: There was minor deformation of the stacking brackets as a result of the lifting hooks twisting in the lift holes.

6.8 FORK LIFT TEST: (with two 1500 lbs. dummy fuel cells)

6.8.1 The container was lifted by forklift and transported for a distance of 100 feet.

6.8.8.1 RESULTS: There was no evidence of instability or tendency for the fork prongs to puncture the container.

6.9 TOWING TEST: (with two 1500 lb. dummy fuel cells)

6.9.1 Cables were attached to the towing eyes in the container base and the container was towed over a distance of 50 feet. This test was applied to each end of the container.

6.9.1.1 RESULTS: No Damage

6.10 STACKING TEST: (with two 1500 lbs. dummy fuel cells)

6.10.1 Two hardwood skids were placed on the stacking brackets at one end of the container and a load of 7880 lbs. was (equivalent to two empty containers) applied across the skids.

6.10.1.1 RESULTS: There was no evidence of damage or noticeable deformation.

6.11 FUEL ASSEMBLY LOAD/UNLOADING DEMONSTRATION:

6.11.1 A complete load/unloading sequence was performed. Minor changes in the sequence developed and the test procedure in the appendix of this report now reflects the changes.

6.11.2 A record of time (man hours) are recorded in the data log.

6.12 SHIPPING TEST: (with two 1500 lbs. dummy fuel cells)

UNSCHEDULED 48" INVERTED DROP - During preparation for the shipping test the loaded container was placed aboard a flat bed truck for transporting outside the building for transfer to a flat bed trailer.

The container was placed on the center of the truck bed with an overhead hoist and once outside the forklift operator attempted to lift the container. Not realizing that the forks did not extend far enough to completely engage the container, he attempted to lift the container rapidly, causing the container to roll over on to its side and off the truck bed to the ground (approximately a 48" drop). The container landed on its cover resulting in a distorted stacking bracket, which was the only external damage.

In trying to upright the container to its base the driver placed the fork prongs against the cover skin and lifted, not realizing that the container weight 6940 lbs. with the dummy fuel cells inside.

The result was that the cover skin was caved in by the prongs.

At this time the driver notified the test engineer who then brought the container back inside the building where it was opened and the contents examined.

Since the clay had been installed in preparation for the road test, it was possible to determine the effects of the 48" inverted drop as far as deflections and shock were concerned.

The following results were noted:

A) The cover skin had been caved in by the forklift prongs approximately 3 inches over a 48 inch span on one side. This was hammered out before start of the shipping test.

B) AFT END - This was the end, which received the initial impact from the fall and the minimum remaining clearance between the frame and the cover was 3/16.

There was evidence that the frame had

deflected toward one side causing two bolts on the frame clamps to strike the shockmount bracket and chip the paint. This apparently caused one VEXILAR accelerometer to trip in the lateral axis.

A minimum of 2 inches was recorded between the bottom of the frame and the container skin.

C) FWD END - A minimum clearance of 4 1/4" between the cover and the frame was recorded.

There was evidence that the frame clamps had also contacted the shockmount bracket at this end although the VEXILAR accelerometers had not tripped.

A minimum clearance of 4 inches was recorded between the bottom of the frame and the container skin.

It should be noted that the condition of the container was excellent considering the drop that it had experienced and since no apparent damage had resulted except for the cover stacking bracket, it was decided to repair the dented portion of the cover skin and proceed with the shipping test as scheduled. The total time of the delay was approximately two hours.

6.12.1 SHIPPING TEST: (with 34,700 lbs. extra weight)

The container, with two dummy fuel cells instrumented for shock recording was secured to a commercial flat bed trailer with 34,700 lbs. added to the trailer bed simulating the weight of five additional loaded containers.

A predetermined course of 20 miles was traveled including state highways, as well as, rough back country roads.

6.12.1.1 RESULTS: Recorded shock levels were well within acceptable limits.

6.12.2 SHIPPING TEST: (container and two dummy fuel cells only)

Following the above test, the additional weight of 34,700 lbs. was removed from the trailer. A repeat of the above test was performed.

6.12.2.1 RESULTS: Recorded shock levels were well within acceptable limits and upon examination of the container contents it was determined that deflections of the frame were slight (1 1/8" max, in vertical axis) indicating shock inputs to the container base were not excessive in spite of the rough roads traveled.

NOTE: The instrumentation recorder was operated at various speeds rather than 0.2 "/sec. This was done due to the reduced mileage traveled permitting a higher rate of recording paper consumption and with the result of improved trace resolution.

6.13 FLAT DROP: (with one dummy fuel cell only)

6.13.1 One dummy fuel cell was removed from the container and the container was dropped from a height of 10" landing flat on its base. Four shockmounts had been removed to allow for the decreased weight of the suspended mass.

6.13.1.1 RESULTS: No Damage - Data Acceptable.

6.14 EDGE DROP: (with two 1800 lbs. dummy fuel cells)

6.14.1 Each of the two dummy fuel cells were increased in weight by adding steel blocks internally.

One end of the container was supported on a 5 inches high wood block placed at right angles to the skids. The opposite end of the container was raised and allowed to fall freely to the floor from a height of 20 inches.

6.14.1.1 RESULTS: No Damage - Data Acceptable.

6.15 LEAKAGE TEST:

6.15.1 An airtight plug was installed in the pressure relief valve opening in the end of the container and the container was pressurized to 10 P.S.I.G.

The gage was monitored for 10 minutes during which a pressure drop of .2 lbs. was observed. The pressure was brought back up to 10 P.S.I.G and the time and pressure recorded every 15 minutes for one hour. Soap solution was applied during this one hour to all welds and joints in search of leaks.

6.15.1.1 RESULTS: No leaks or pressure drop.

7.0 CONTAINER MODIFICATIONS:

7.1 As a result of the tests, the following changes were incorporated in the container:

A) SHOCKMOUNT RELOCATION: The shockmounts were raised 1 1/2" on their mounting brackets on the container in order to raise the suspension frame. This increased the bottom clearance thereby eliminating frame contact with bottom skin. This is possible since cover clearances during tests were greater than anticipated.

B) VEXILAR ACCELEROMETER:

1. The two vertically sensitive VEXILAR Accelerometers (one each end of frame) were changed from 11 G"s to 10 G"s trip level.

2. The longitudinally sensitive accelerometer (1) was relocated on the frame to make it more clearly visible from the view ports in the container end.

C) TOP END GATE - The hinge point on the top end gate of the frame was lowered to limit the angle of rotation of the gate.

This allowed the container end to become a positive stop for the gate.

D) TOP AND BOTTOM END GATE LINERS - The liner material was changed from cork to 60 durometer neoprene.

E) LIFTING EYES - All eight lifting eyes (2 each stacking bracket) were reinforced by a backup plate (doubler) welded to the brackets.

EXHIBIT B

PART B OF EXHIBIT B

30′ DROP TESTS AND PIN DROP

PART B

TABLE OF CONTENTS

EXHIBIT B

1.0 PURPOSE:

1.1 The purpose of the tests herein is to verify by prototype testing that the design and construction of the FRESH FUEL SHIPPING CONTAINER will retain the contents in a nuclear safe configuration through a hypothetical accident condition of a 30 ft. Free Drop. NUCLEAR SAFE CONFIGURATION is defined for this purpose as the two fuel assemblies, the boron-steel poison plated, and the steel strongback plates retained in essentially designed relationship; and all retained within the container shell.

2.0 SUMMARY:

2.1 All of the required elements for a nuclear safe configuration were maintained upon complete inspection of the container following the final drop test.

2.2 The final clearances as well as a record of damage to the container are listed in Section 8.0 TEST RESULTS.

3.0 CONCLUSIONS:

3.1 Based on the satisfactory final container configuration, both internal and external, it was unamiously concluded by all attending witnesses as well as the report writer that the container more than adequately performed its desired functions. Much greater damage was anticipated than was actually experienced and no further modification of the container is required to improve its performance under these extremely severe test conditions.

4.0 RECOMMENDATIONS:

4.1 Since the tests herein were performed on a prototype container which had previously been qualification tested and documented (Reference: Part A of this test report), there is every reason to believe that this container design has the structural integrity required to fulfill its mission.

4.2 It is hereby recommended that this container P/N 208R001-1 be granted approval for shipment of production fresh fuel cells.

5.0 CONTAINER DESCRIPTION:

5.1 The container description in Section 4.0 of Part A of

the test report applies with the exception of Para. 4.2 Physical Data which is modified below:

WEIGHTS:

Container & Frame	3940 lbs. (same)
Fresh Fuel Cells (2)	3360 lbs. (was 3000)
	7300 lbs. (was 6940)

6.0 METHOD OF TEST:

6.1 GENERAL:

Two dummy fuel cells (1680 lbs. ea.) were installed in the prototype container and the container cover was secured as ready for shipment.

6.1.1 The container was then subjected to the following test sequence:

a) Drop #1 Bottom Drop - 30° Rotational
b) Cover removed for examination of contents
c) Drop #2 Cover Drop - 30° to horizontal
d) Drop #3 40 inch Pin Drop (inverted)
e) Cover removed for examination of contents

6.2 INSTRUMENTATION: NOT REQUIRED - NOT PROVIDED.

7.0 TESTS:

7.1 DROP #1 BOTTOM DROP - ROTATIONAL:

The loaded container was placed on the ground on its skids. A cable sling was attached to the lifting eyes in the stacking brackets (one hood in each stacking bracket). The sling was then attached to a quick release mechanism on the crane. The container was then lifted off the ground in such a manner that the AFT END raised off the ground first to an angle of 30° to the horizontal (see sketch in Appendix A) before the FWD END left the ground. The container was raised to a height of 30 ft. from the bottom of the skids at the FWD END to the ground. This was determined by a 30 ft. length of string attached to the FWD END skids with a small weight at the end of the string which just left the ground when the correct height was attained. The quick release was then actuated and the container fell freely to the ground in the same attitude which it was suspended causing the AFT END to rotate to the ground after the FWD END struck. See Appendix B for photographs of results.

Appendix B for photographs of results.

7.1.1 The container was then opened and examined for damage. See Section 8 for TEST RESULTS.

7.2 DROP #2 COVER DROP - 30° ANGLE:

The container was placed on its cover with the four skids sticking straight up. The container was then rolled over 30° toward its side until the sealing flange was at a 30° angle from the horizontal (see sketch in Appendix A). A sling was attached to the container and the quick release mechanism on the crane. The container was raised to a height of 30 ft. from the cover to the ground. The quick release was actuated and the container fell freely to the ground on its cover. The container was not opened after this test for fear of not being able to replace the cover for the pin drop test.

7.3 40 INCH PIN DROP TEST:

A steel pin (size 6 in. dia. x 8 in. lg. with 1/4 in. radius around top circumference) was placed on the ground and the container raised above the pin to a height of 40 inches to the top of the pin. The container was angled in such a manner as to present the undamaged side of the cover to the pin. Upon release, the container cover struck the pin squarely and rolled over on its side to the floor. Photographs were taken of the container and pin immediately thereafter.

7.3.1 The container was then uprighted and the cover removed for examination of the container contents.

7.3.2 See Section 8 for RESULTS OF THE TEST SERIES.

8.0 TEST RESULTS:

8.1 Photographs were taken during the test series and are included in Appendix B.

8.1.1 The following is a list of photographs and an explanation of what they depict:

PHOTO NO.	DEPICTION
1	Showing container prior to release during drop #1 Bottom Drop - 30° Rotational. NOTE: That the container angled in relation to crane boom.
2	Immediately after Drop #1. NOTE: The splintered skids (FWD END)
3	AFT END - this end suffered the rotational impact and bottom end plate distortion of 1 in. out of vertical plane. Also the pork chop was severely distorted.
4	Showing cover removed - general view looking FWD. The support rod broke loose from its storage position and is leaning against clamp bow. Frame and fuel cells essentially intact.
5	General view looking AFT.
6	Showing FWD END - Left side shock mount broken loose from suspension frame. Also note container shell directly under frame is formed around skid angle.
7	Showing AFT END - right side shock mount broken loose and locally distorted channel adjacent to shock mount. Also side and top pressure pads loose as a result of end gate pivot rods slipping out of sleeve brackets when frame bottomed out on skid angle. This caused permanent set in frame rails which in turn loosened top and side pressure pads. The fuel cell on this side slid AFT 5/8".
8	Showing FWD END with 5/8" clearance between end gate fuel cell as a result of cell shifting AFT.

9	Showing local distortion of vertical poison plate caused by longitudinal bending (1/2" out of plane).
10	Showing local distortion of frame alongside broken shear mount at AFT END.
11	Showing FWD END - bottom inside container - NOTE: skin formed over skid angle from frame bottoming out.
12	Showing AFT END view immediately after Drop #2.
13	Showing 3/4 view from AFT END.
14	Showing container in upright position after Drop #2.
15	Showing stacking bracket depressed and tear in skin.
16	Showing container suspended above pin for Drop #3 40 in. PIN DROP TEST.
17	Same as #16 - opposite side.
18	Showing container on its side immediately after 40 in. PIN DROP. A 6 in. long cut through the skin resulted from the sharp edge of the dummy fuel cell inside the container striking the skin directly on the pin.
19	Showing container opened for examination after 40 in. PIN DROP. NOTE: The frame is still suspended by the shock mounts with the exception of one mount at each end which broke from Drop #1. Close inspection reveals all of the clamp bows on the right side are bent as a result of impact from Drop #2 COVER DROP but still retain the fuel cells in a "NUCLEAR SAFE CONFIGURATION".
20	Showing view looking AFT (right side) - NOTE: cracks in clamp bows where they contact the pressure pads. Full force of the impact from Drop #2 was taken by these members and although four were loose after the drop, the remaining five on this side were quite adequate to

retain the fuel cell in its relative position to the other cell.

21 Showing view looking AFT - Left Side. NOTE: clamp bows and pressure pads undamaged but pressure pads at 3 stations were loose from frame distortion.

22 Showing close-up view of AFT END. NOTE: broken shock mount attachment to the frame and end gate pivot pins out of their sockets. Also note that clamp bow on near side is cracked and loose but clamp bow next to it is still tight and capable of restraining fuel cell.

23 Showing AFT END with fuel cell and end gate ass'y removed to expose "T" support casting which came through tests undamaged and maintained a "NUCLEAR SAFE CONFIGURATION" lateral spacing between cells of 2 11/16".

8.2 Measurements of container shell distortion disclosed that the basic configuration of the base had been little affected by the drop tests and the maximum distortion resulted from the COVER DROP (Drop #2).

8.2.1 The ends of the cover received the full force of the impact directly on the two stacking brackets which were depressed to a greater degree than the cover shell itself. Actual measurement disclosed the cover shell had been uniformly depressed 3 inches throughout its length. (See Fig. I)

FIG I.

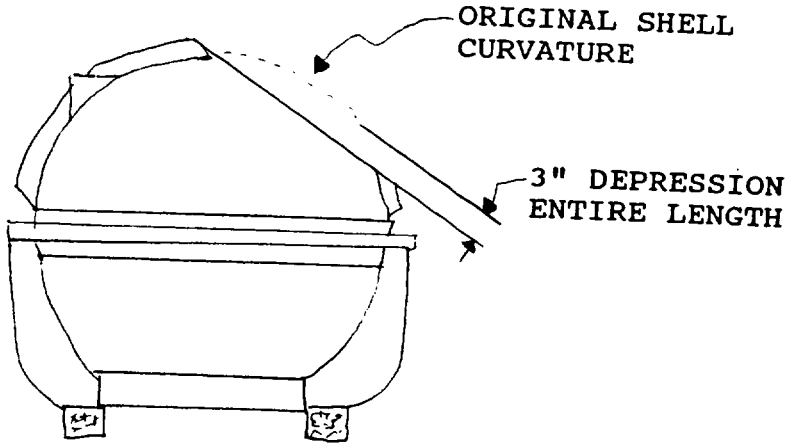

8.2.2 At no time during the tests did the sealing flange hardware either break or even loosen. All were checked after each drop.

8.2.3 The photographs in APPENDIX B clearly show external areas of local container distortion which, considering the drop heights, were of minor consideration.

APPENDIX A to EXHIBIT B

TEST DIAGRAMS

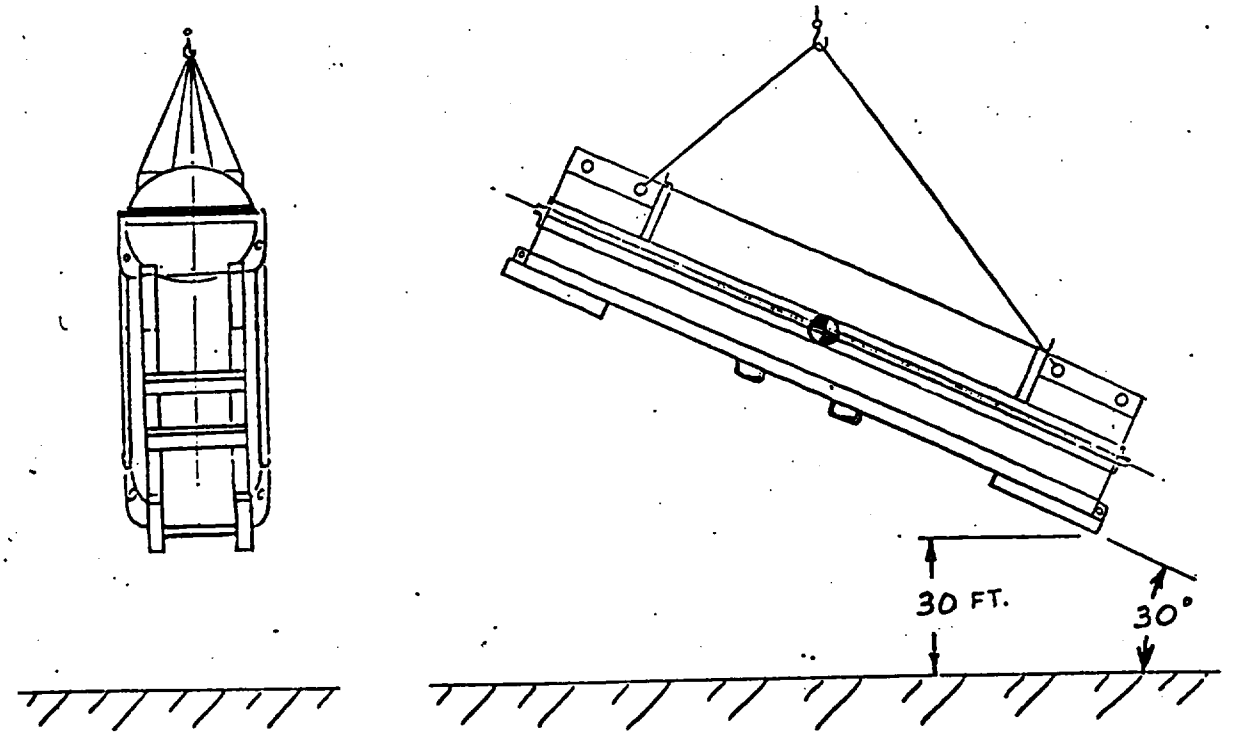

DROP #1
BOTTOM DROP - 30° ROTATIONAL.

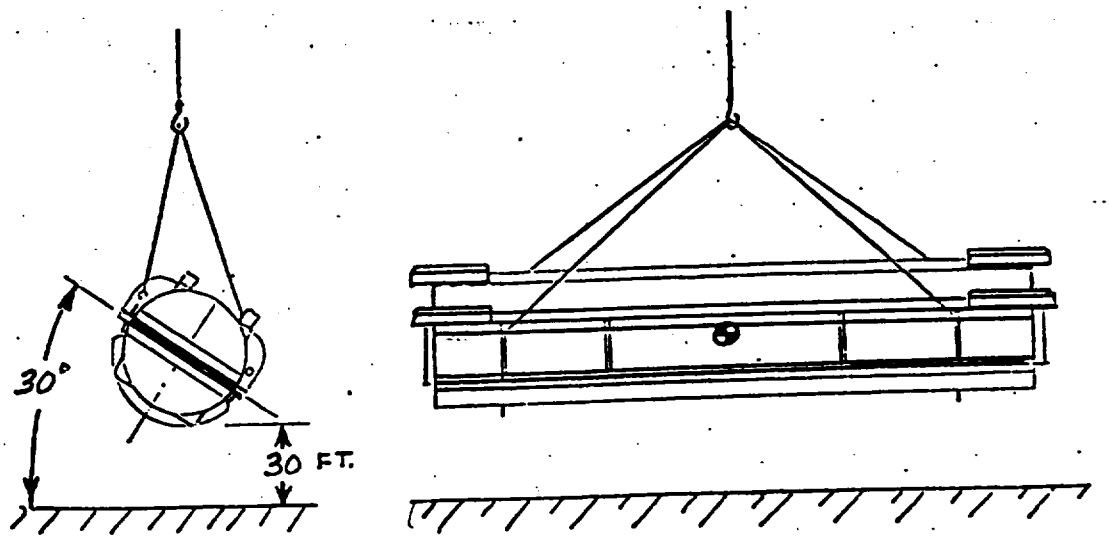

DROP #2
COVER DROP - 30° ANGLE

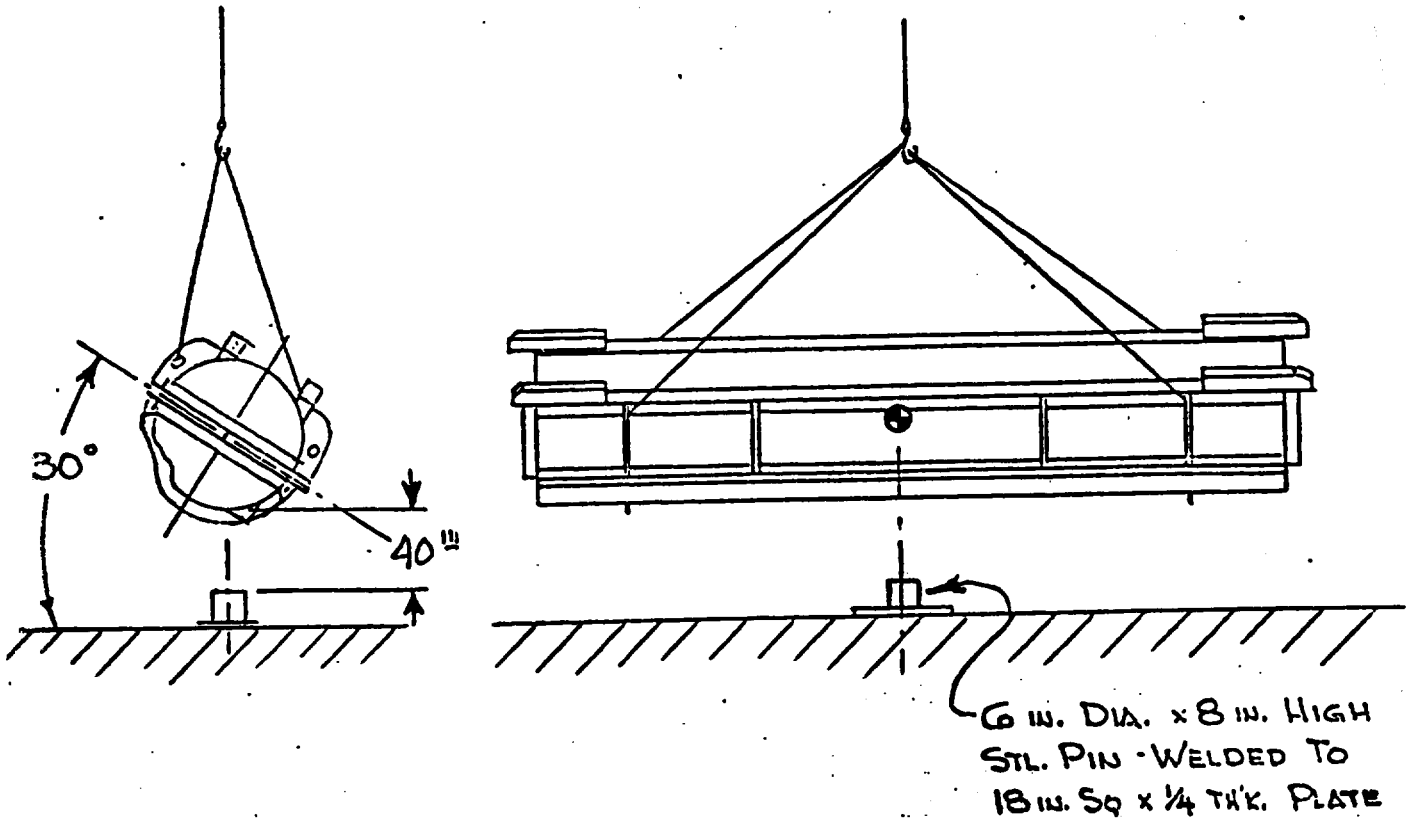

DROP #3
40 IN. PIN DROP (COVER)

APPENDIX B to EXHIBIT B

TEST PHOTOGRAPHS

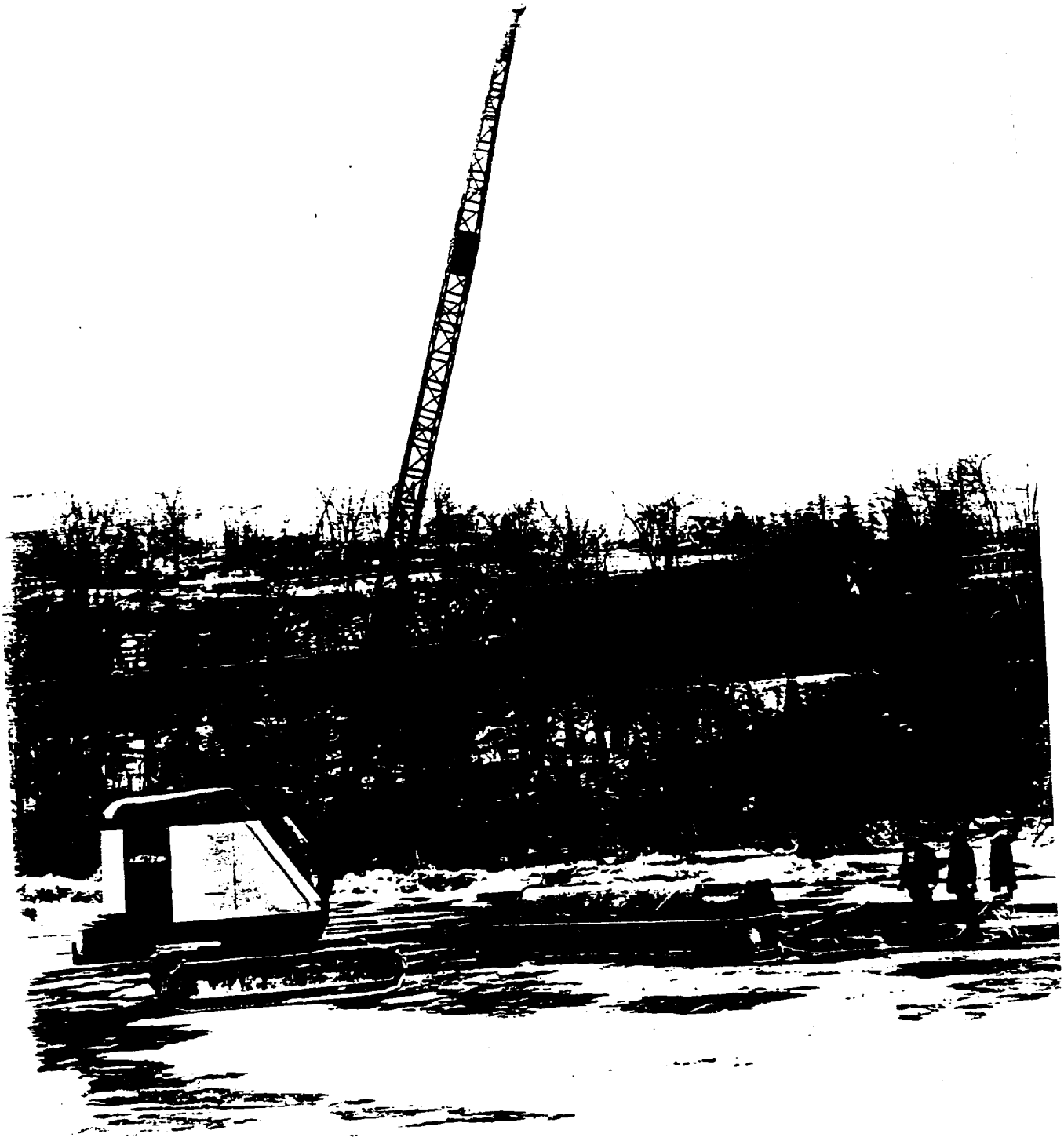

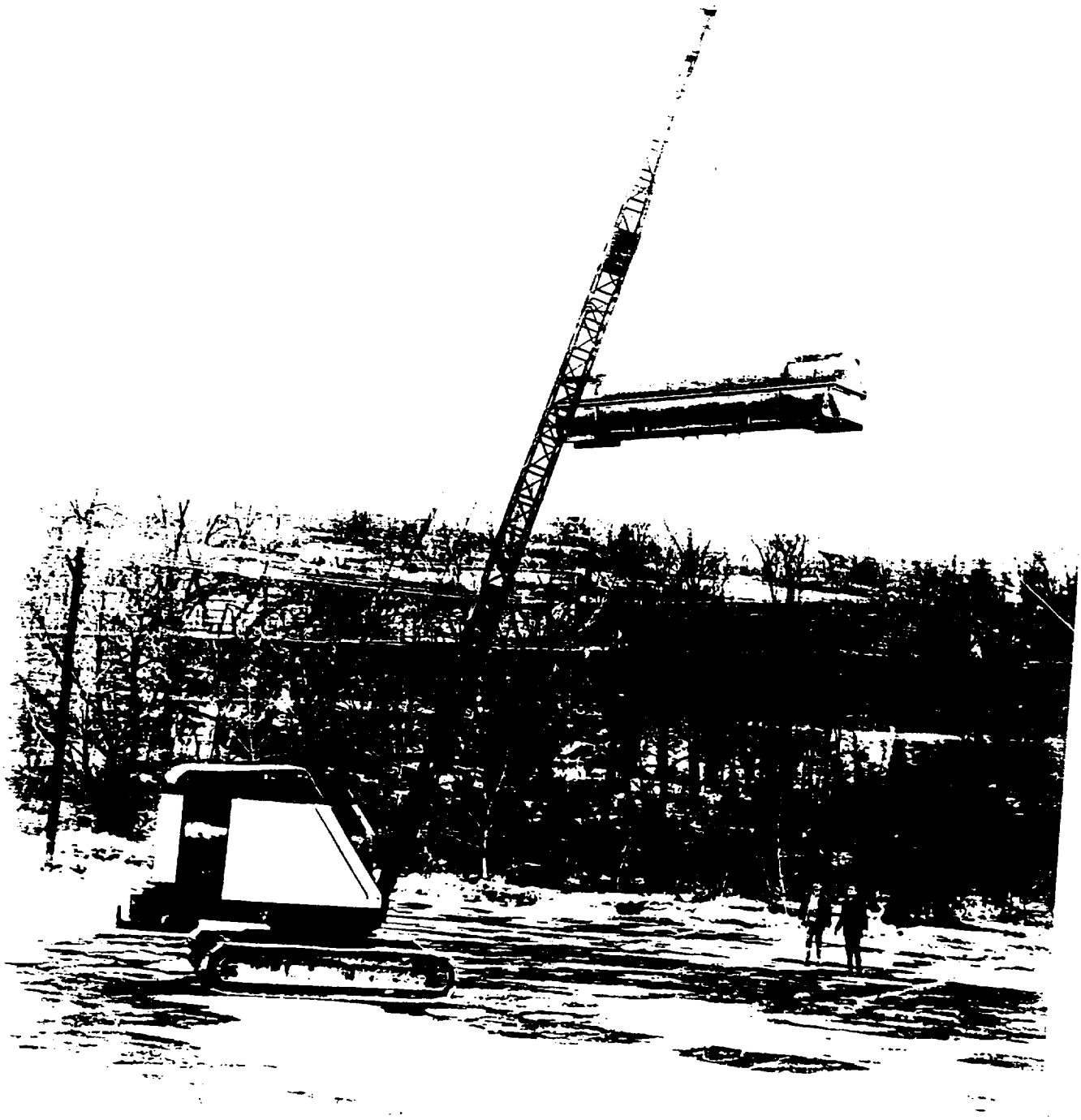

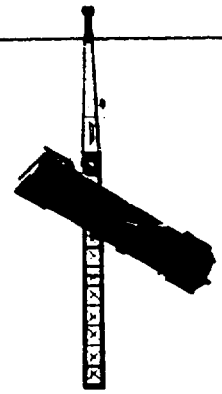

1

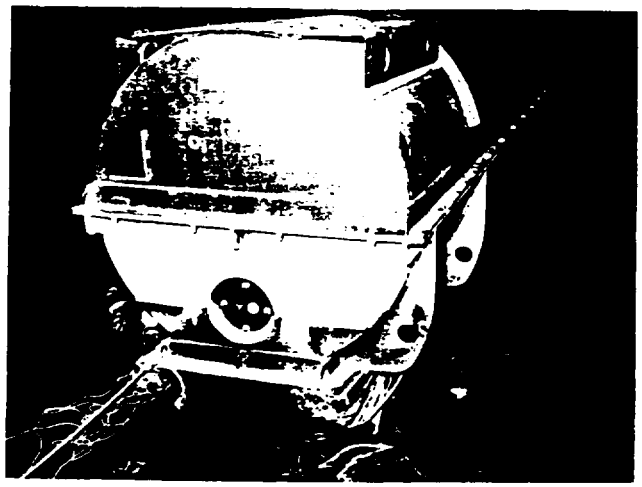

2

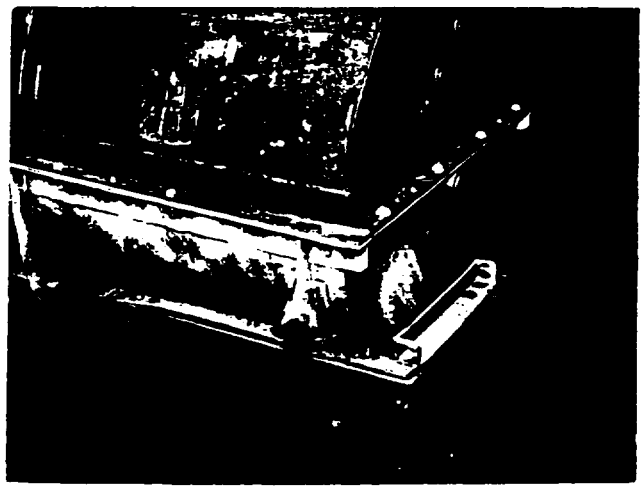

3

DROP # 1 ON SKIDS

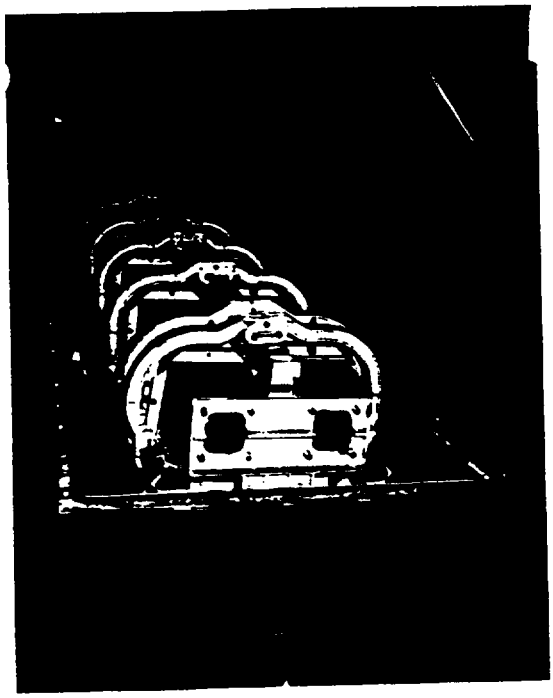

4

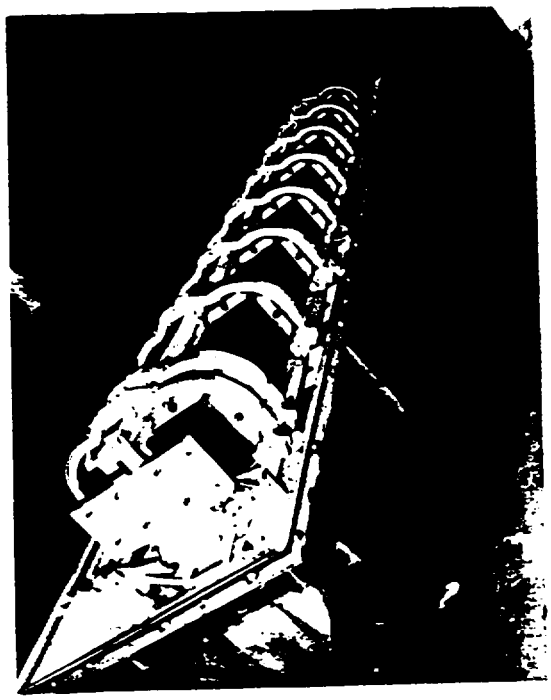

5

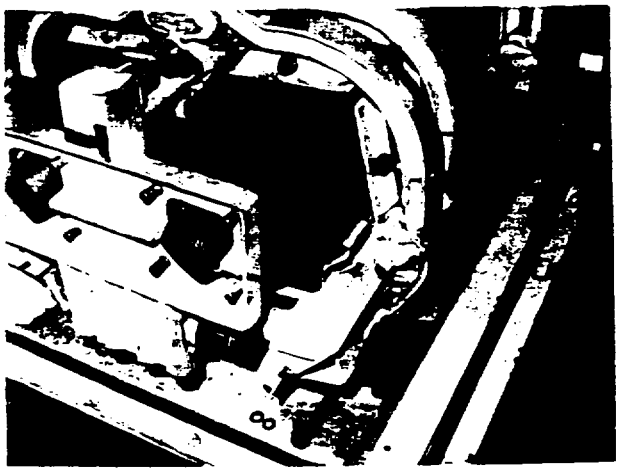

7

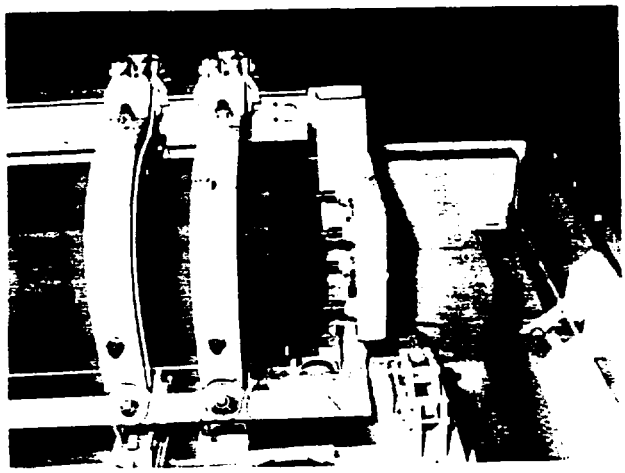

8

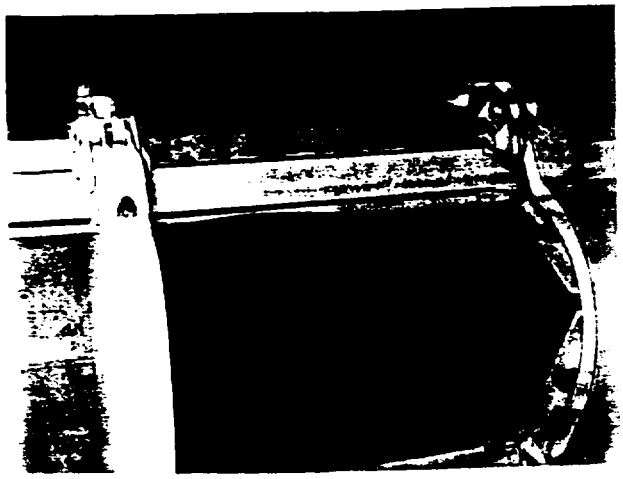

9

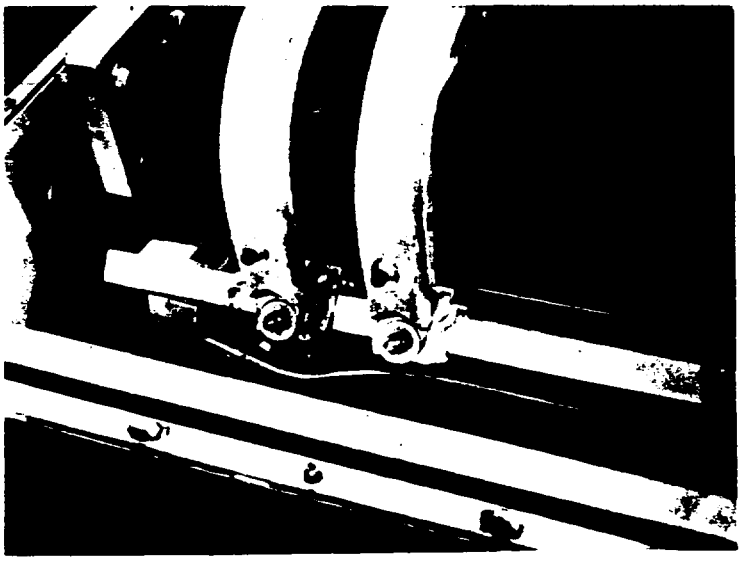

10

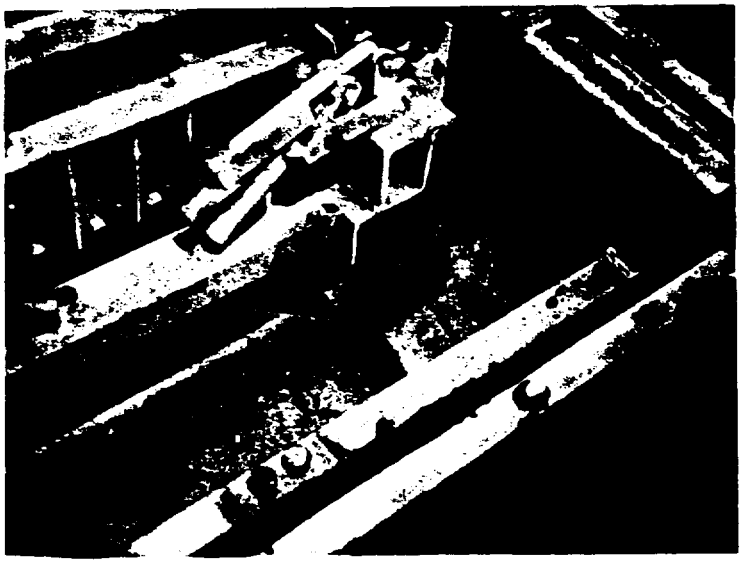

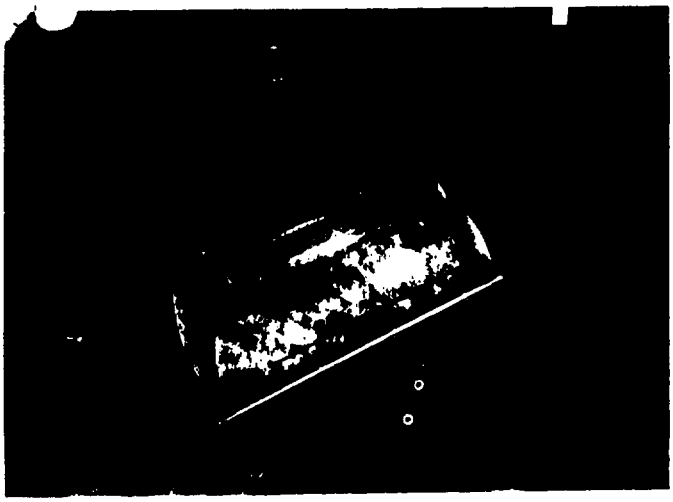

12

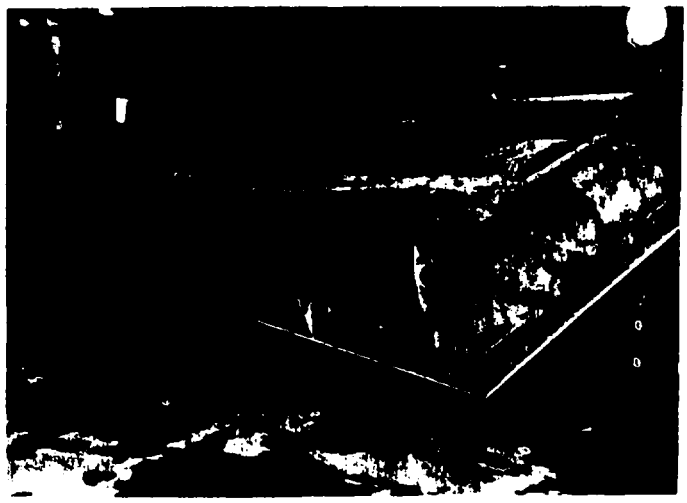

13

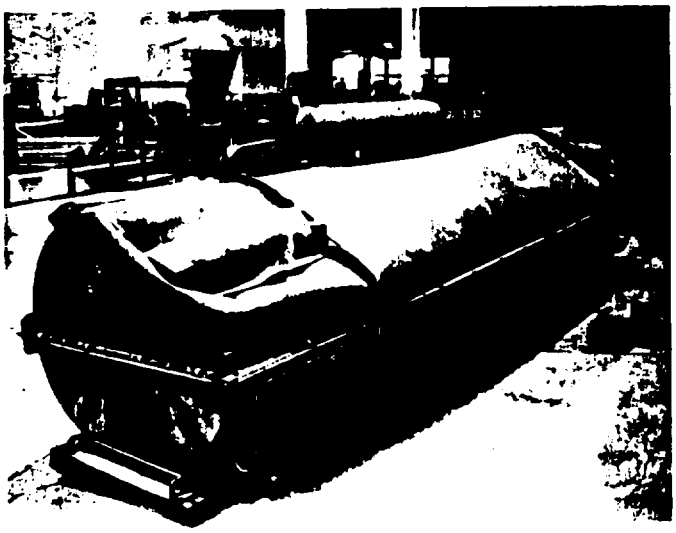

14

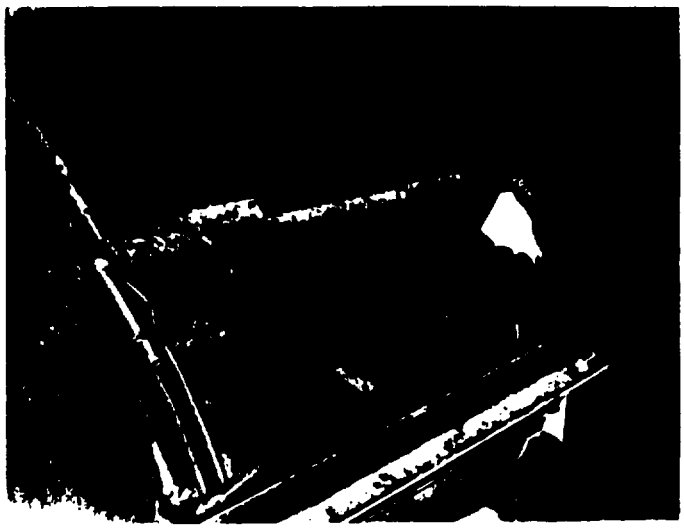

15

DROP #2 (INVERTED)

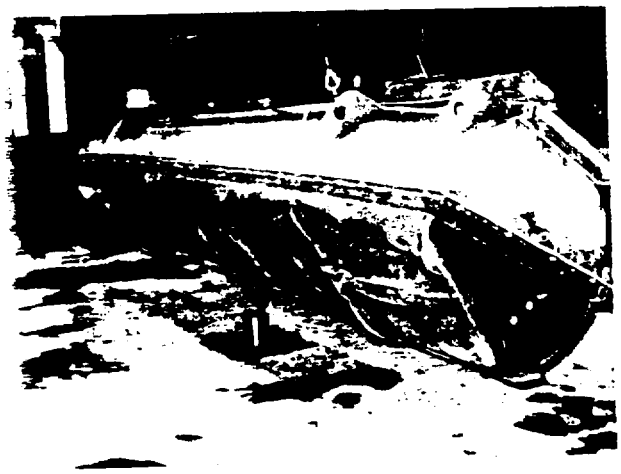

16

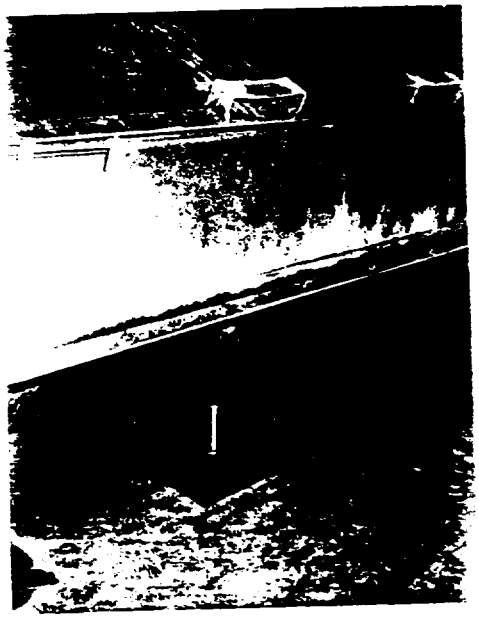

17

18

DROP #3 (PIN DROP)

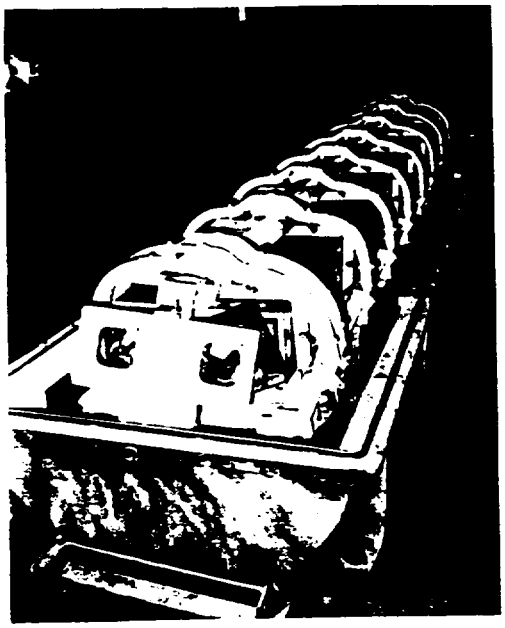

19

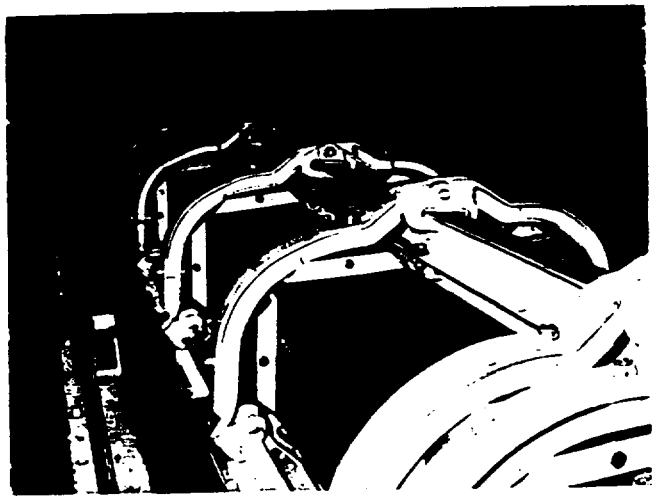

20

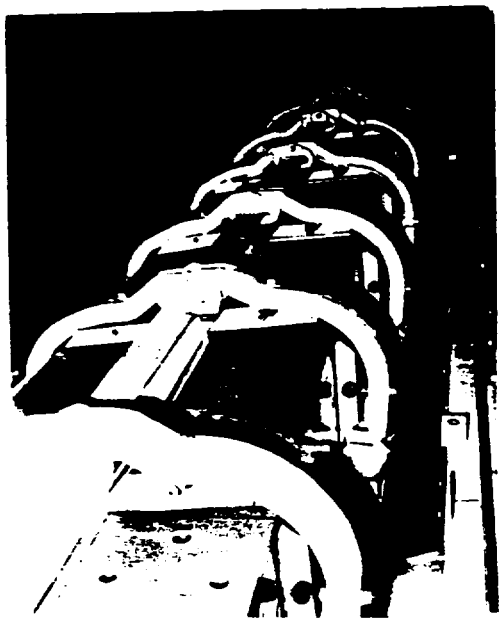

21

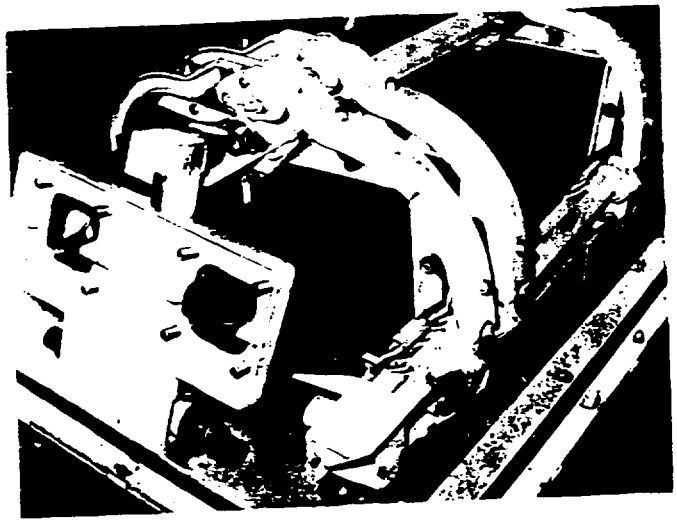

22

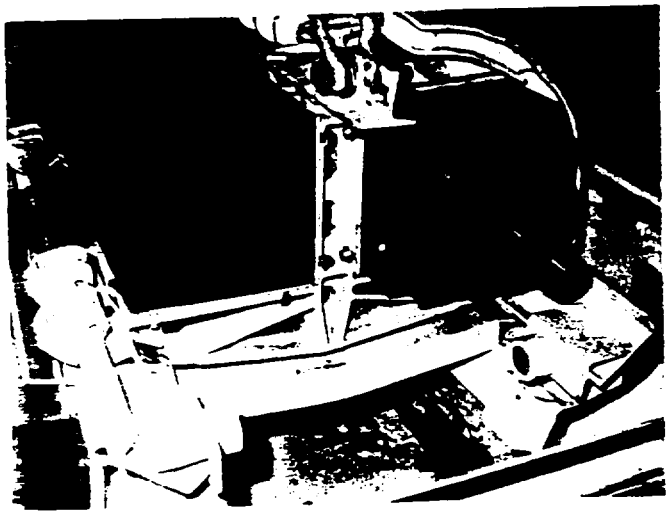

23

EXHIBIT C

LIFT AND TIE DOWN PROVISIONS ON MODEL B FRESH FUEL SHIPPING CONTAINER

EXHIBIT C

TABLE OF CONTENTS

I) REQUIREMENTS

It is the purpose of this report to show the compliance of the handling and transportation provisions with the NRC Specification Part 71 - Packaging of Radioactive Material for Transport, Subpart C - Package Standards, Par. 71.31.

II) GEOMETRY OF ATTACHMENT POINTS ON THE CONTAINER

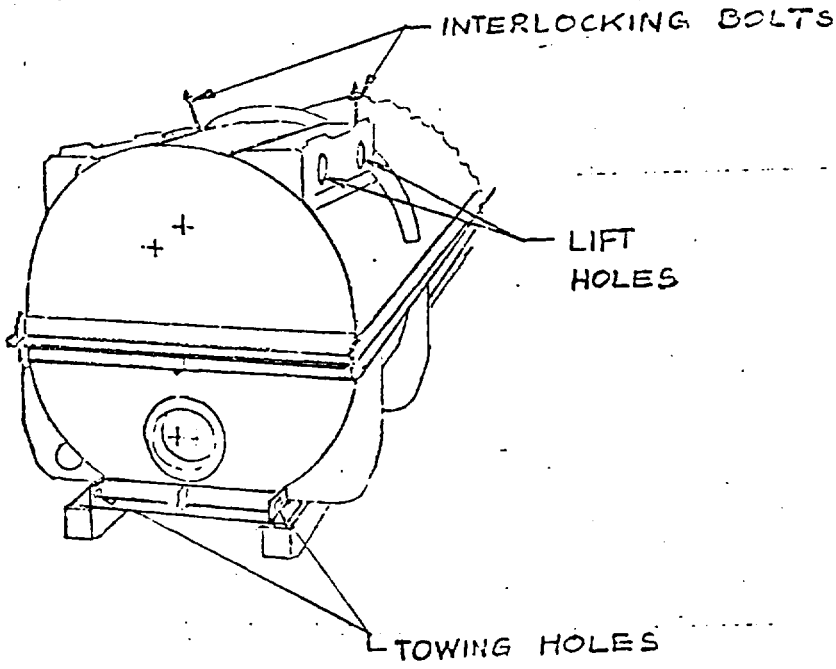
INTERLOCKING BOLTS
LIFT HOLES
TOWING HOLES

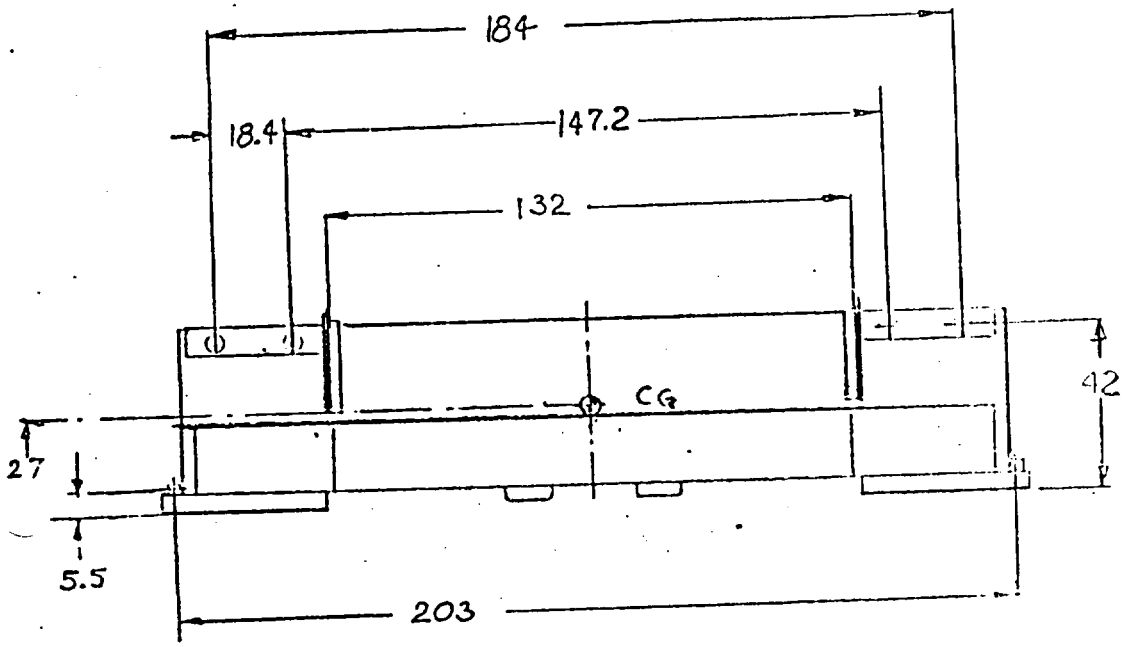

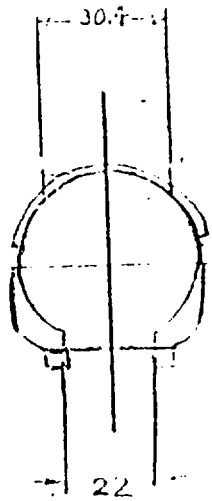

SCALE : 1 IN DRWG = 40 IN

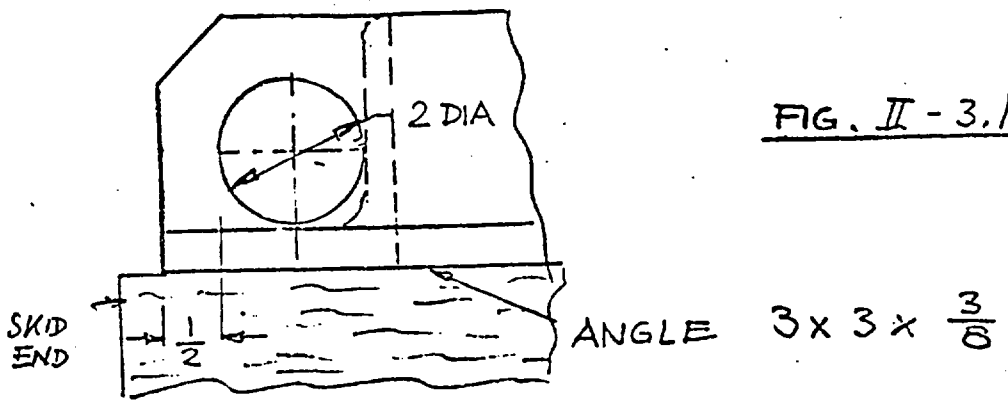

FIG. II - 3.1

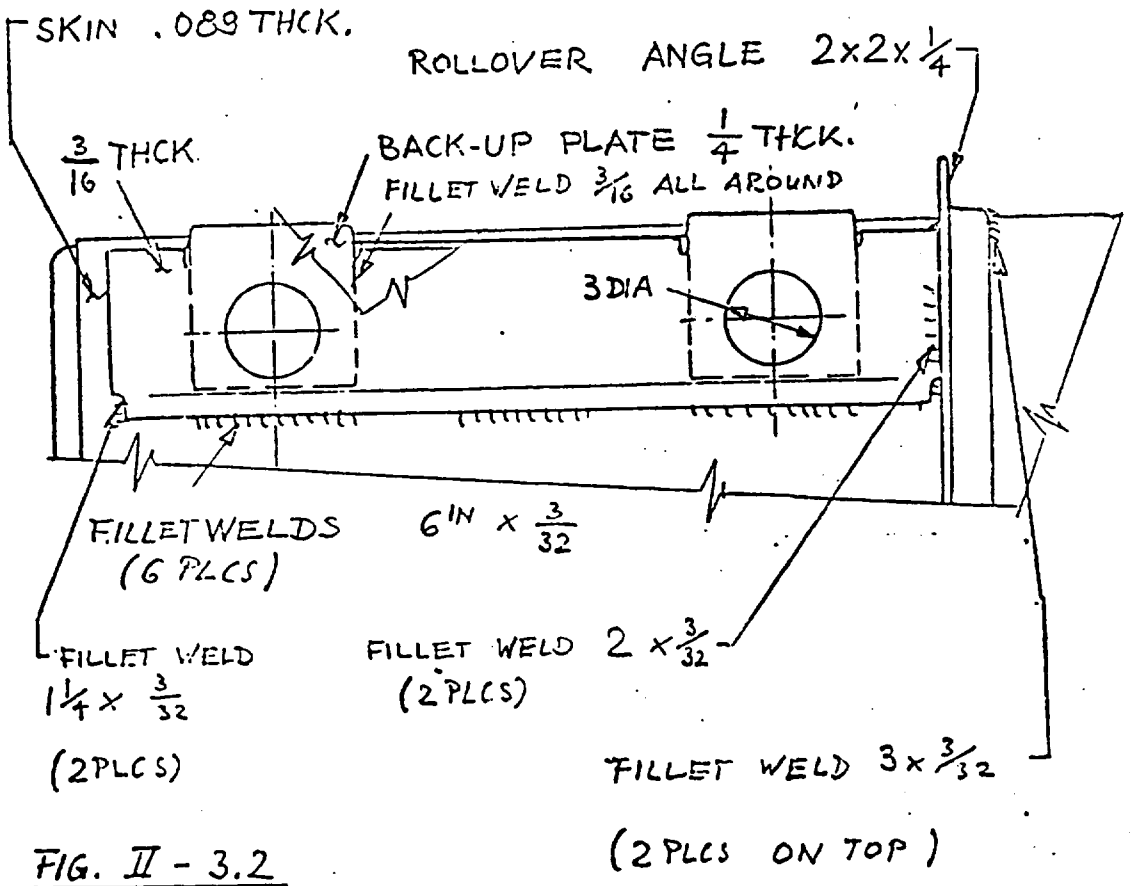

FIG. II - 3.2

LOADING CONFIGURATION

STRAPPING FORCE DISTRIBUTION

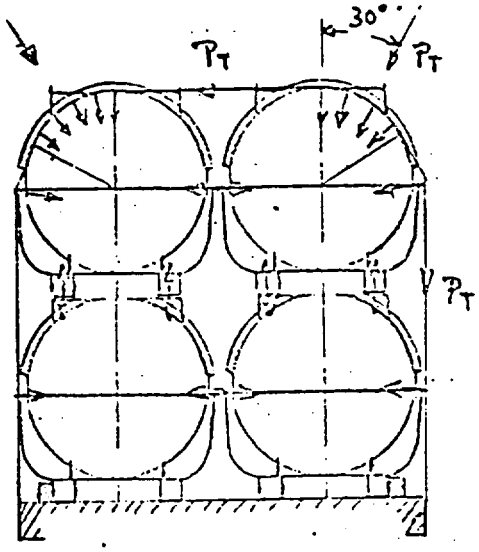

FIG. II-5.1

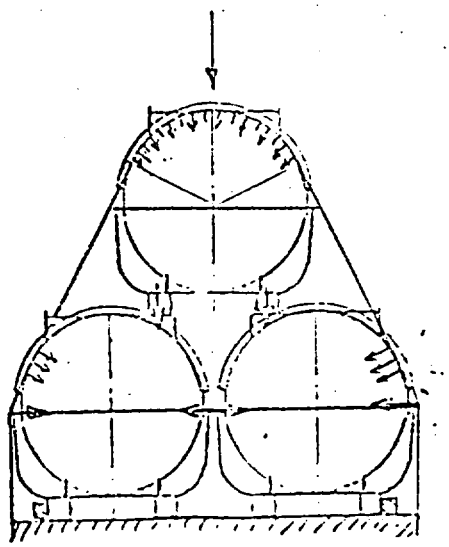

FIG. II-5.2

TRUCK LOADING CONFIGURATION

6 OR 8 CONTAINERS LOADED

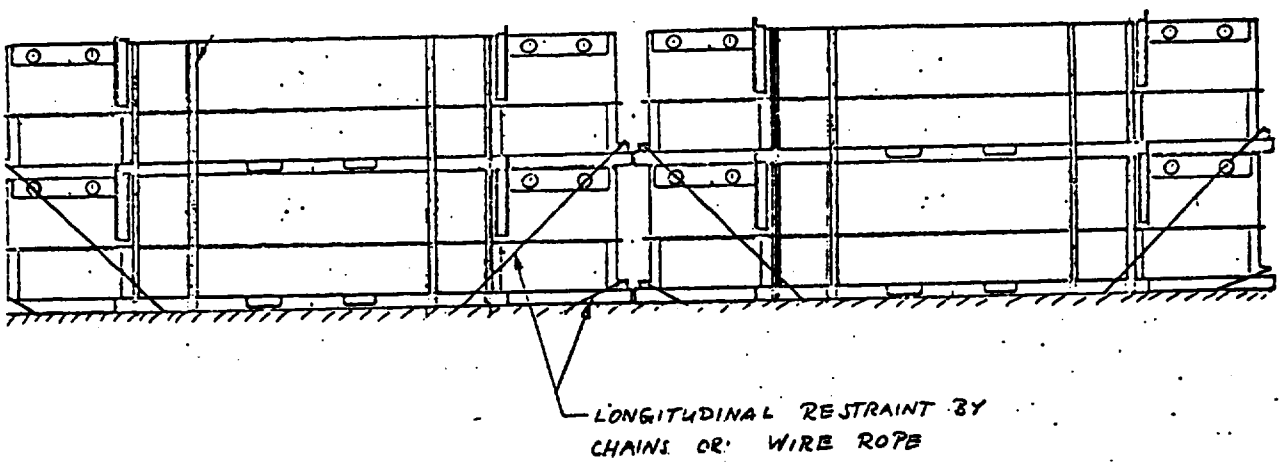

III) FORCES ACTING ON THE CONTAINER

1) Lifting forces per requirements on I - 2 acting on the lift eyes.

2) Tie down forces under scheduled loading conditions.

3) Tie down forces - unscheduled, but possible through use of lift eyes for tie down. Worst condition.

LIFTING FORCES AT 3G SHOCK

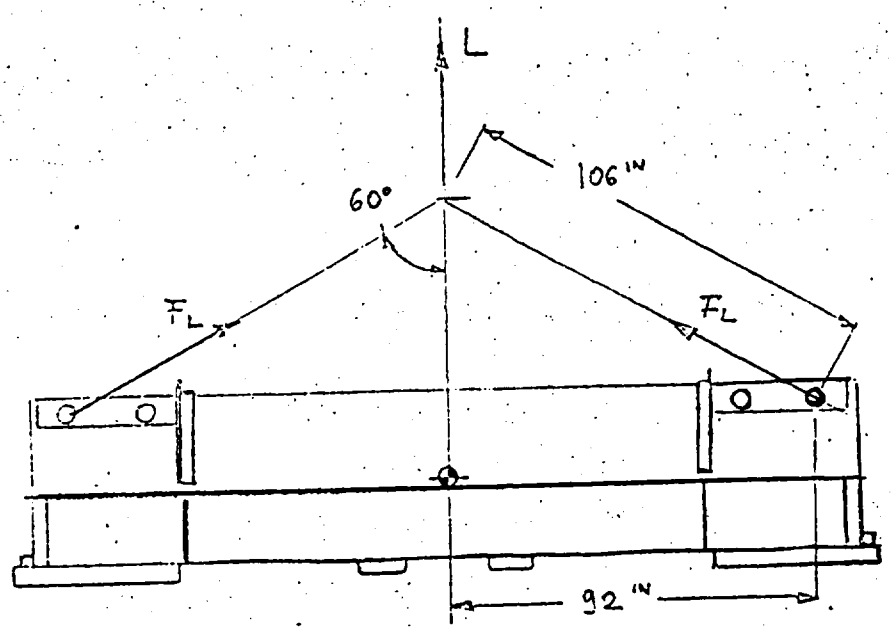

LIFTING FORCE
$L = 3g \times 7300 =$
$L = 21{,}900$ LBS

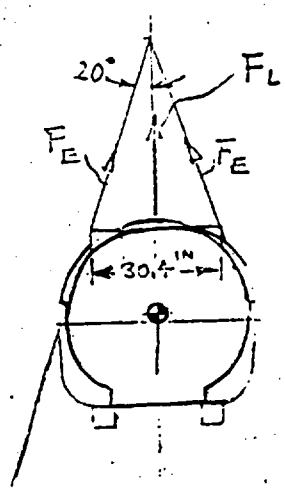

$$F_{ev} = \frac{F_L}{4 \times \cos 20°} = \frac{21900}{4 \times 0.94} = \underline{5830 \text{ LBS}}$$

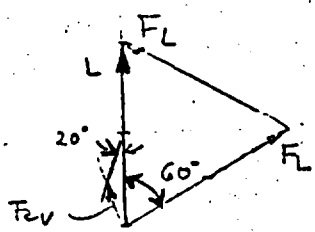

SCALE 1 IN ≅ 20,000 LBS

$F_L - L = 21{,}500$ LBS

LIFTING FORCES AT 3G SHOCK

DETERMINING Fc IN PLANE OF FL

GEOMETRIC ARRANGEMT.
SCALE: 1" = 40"

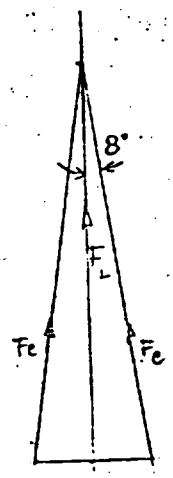

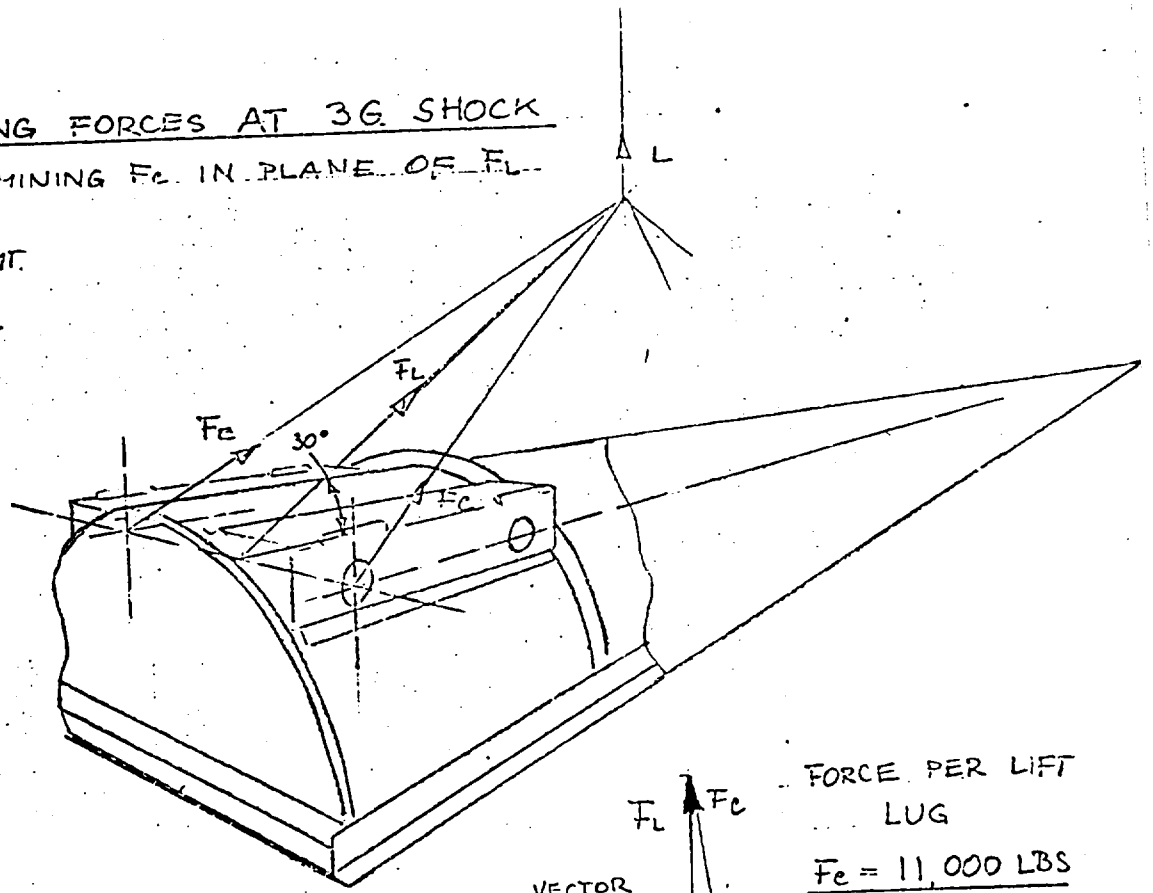

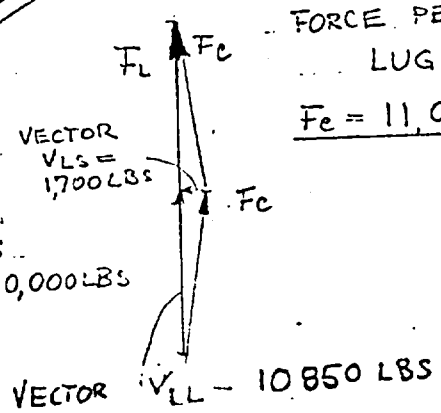

FORCE PER LIFT LUG

Fc = 11,000 LBS

TIE DOWN FORCES AT IMPACT

LONGIT. PLANE

CHOCKS NOT PROVIDED AS AT BOTH ENDS - ACCESS AND SPACE FOR SOLID CHOCKING MAY NOT ALWAYS BE AVAILABLE

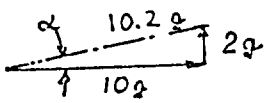

IMPACT VECTORS

IMPACT FORCE VECTOR IN LONGIT. PLANE

$V_L = 7300 \times 10.2 =$
$= 74{,}500$ LBS

UNDER ANGLE
$\alpha = 11.3°$

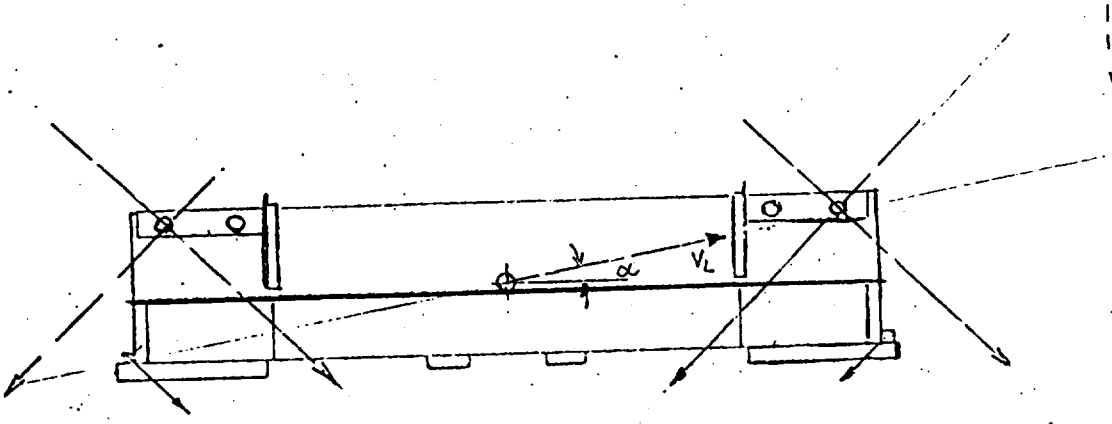

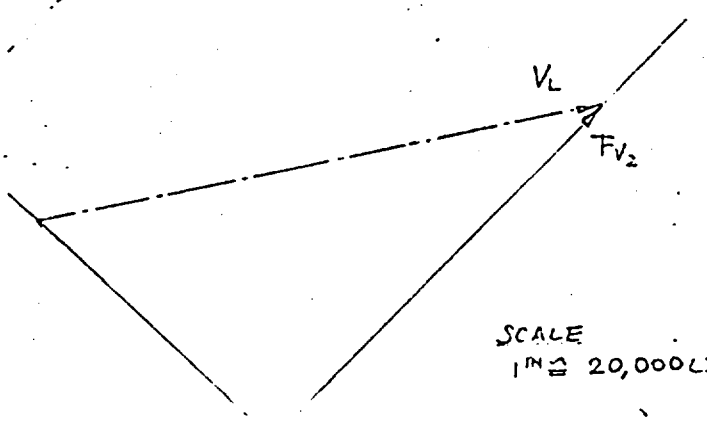

TIE DOWN FORCE VECTORS
LONGITUD. PLANE — 45°

$F_{V1} = 42{,}500$ LBS

$F_{V2} = 61{,}000$ LBS

SCALE
1 IN ≅ 20,000 LBS

TIE DOWN FORCES AT IMPACT

SIDEWISE PLANE

CHOCKS PROVIDED ALONG THE SKIDS

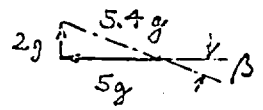

IMPACT VECTORS

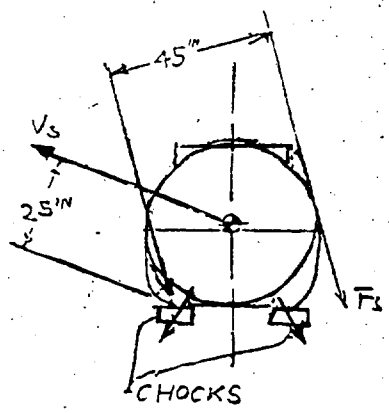

IMPACT FORCE VECTOR IN SIDEWISE PLANE

$V_s = 7300 \times 5.4 =$
$= \underline{39400 \text{ LBS}}$

UNDER ANGLE

$\beta = 21.8°$

TIE DOWN FORCE VECTOR F_s
SIDEWISE PLANE $-15°$:

MOMENTS ABOUT POINT "A":

$\Sigma M_A = 0; \quad F_s \times 45 + V_s \times 25 = 0$

$$\underline{F_s} = -\frac{39\,400 \times 25}{45} = \underline{-21\,900 \text{ LBS}}$$

IV) STRESS ANALYSIS OF ATTACHMENT POINTS

1) Towing Eyes

Used as a guide for longitudinal restraint under about 45 degree angle downwards.

The portion as part of the base frame with skids and stressed in the outlined direction is obviously very bulky and rigid that there is no need for a detailed investigation on strength.

2) Lifting Eyes

The lifting force per lug of F_e = 11,000 lbs (III -3) is less strain to tear out the hole than the unscheduled tie down Force
R_t = 30,632 lbs.

MAXIMUM TIE DOWN FORCE

$$\sin 15° = \frac{a}{F_S/2}$$

$$a = \frac{F_S}{2} \times \sin 15° =$$

$$a = \frac{21{,}900}{2} \times 0.26 =$$

VECTOR $a = 2{,}350$ LBS

RESULTANT R_T

$$R_T = \sqrt{a^2 + \left(F_{V2}/2\right)^2}$$

$R_T = 30{,}632$ LBS

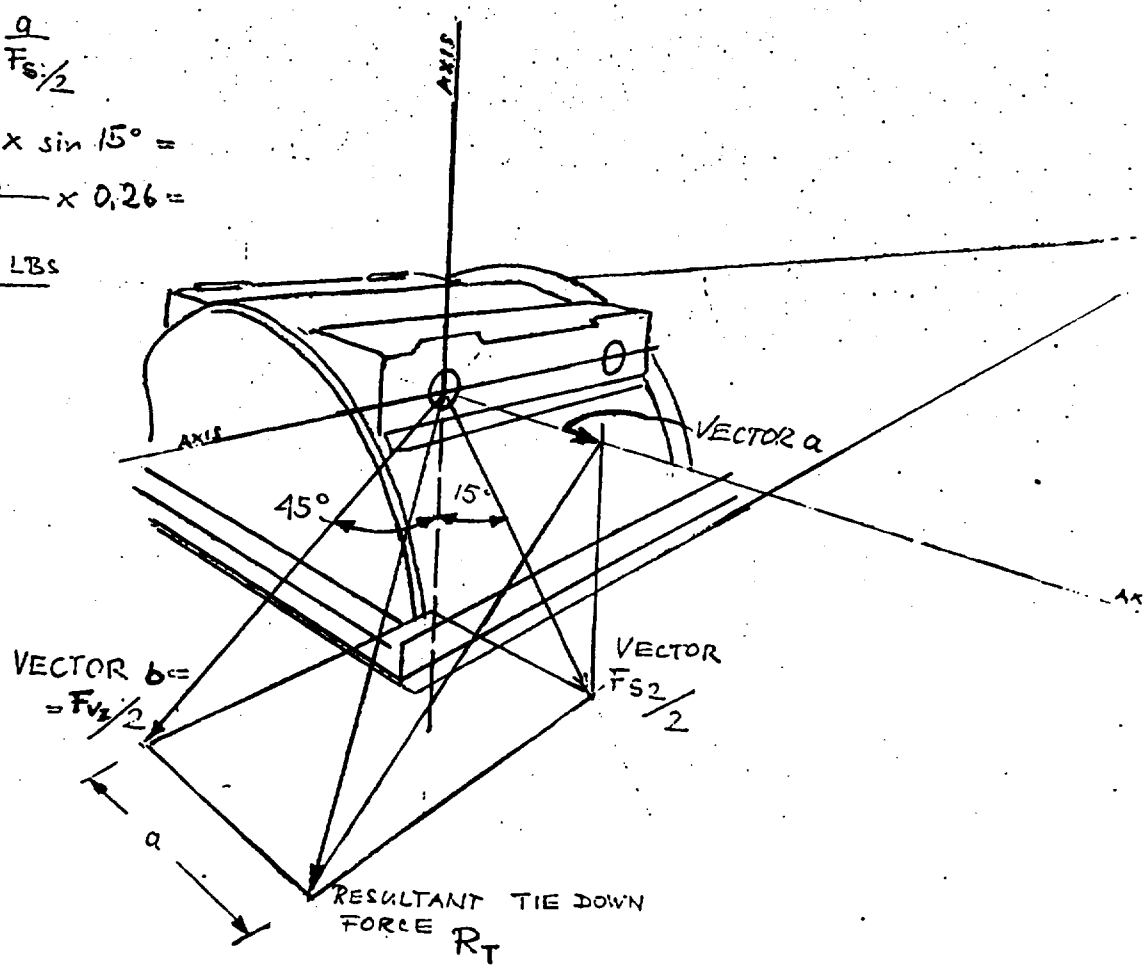

STRESS ON LIFT EYE

- TENDENCY TO TEAR OUT HOLE
- COMBINED STRESS BY:

1) VECTOR a PULLING RECTANGULAR TO HOLE
2) VECTOR b PULLING IN PLANE OF HOLE

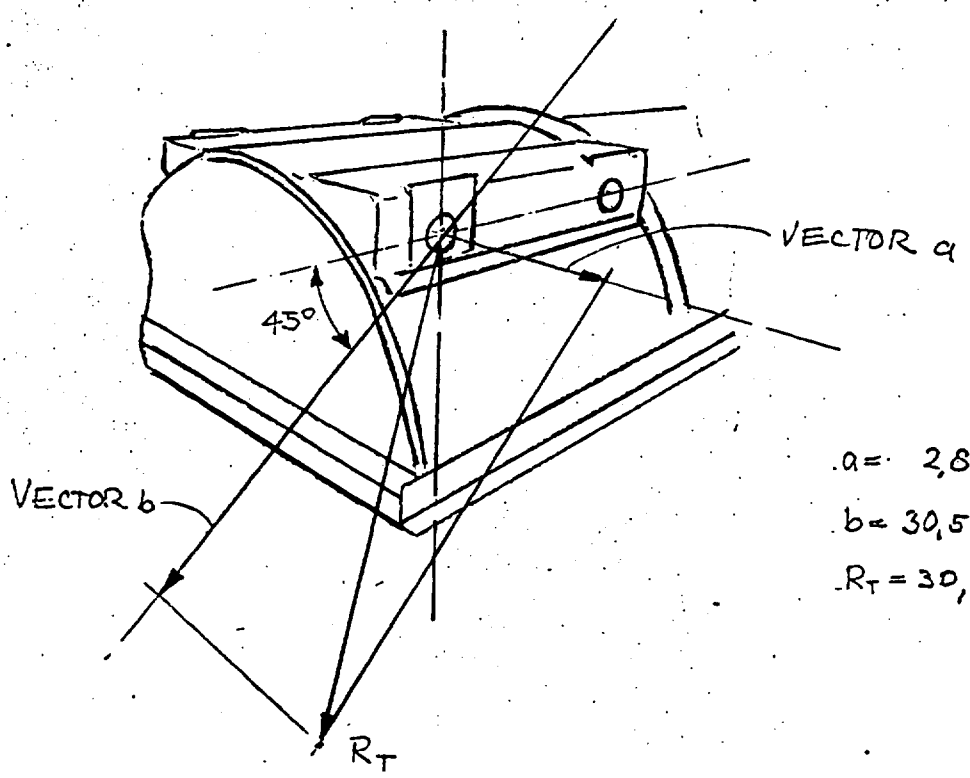

a = 2,850 LBS
b = 30,500 LBS
R_T = 30,632 LBS

LOCATION OF A TIE DOWN HOOK IN THE LIFTING EYE

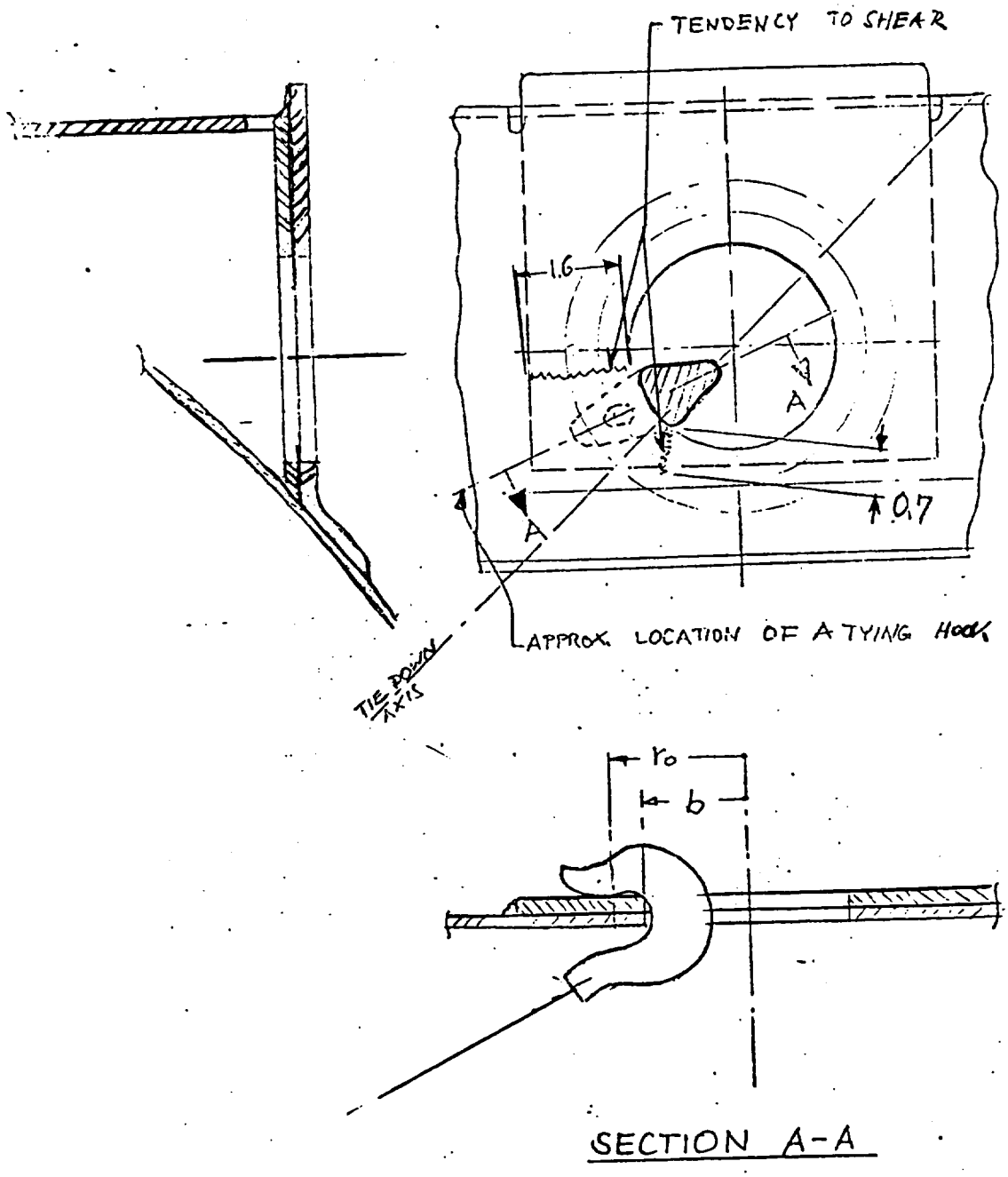

2.1 Vector "a" Pulling Rectangular to the Lift Hole

The hook will be located somewhat higher than at the 45 degree axis because of diminishing space behind the backup plate.

Actual conditions do not allow a standard calculation procedure. We adapt the dimensions to the case #60 of Formulas for Flat Plates, Table X, Page 232, in "Roark, Formulas for Stress and Strain, " McGraw-Hill Book Company.

ACTUAL CONDITION

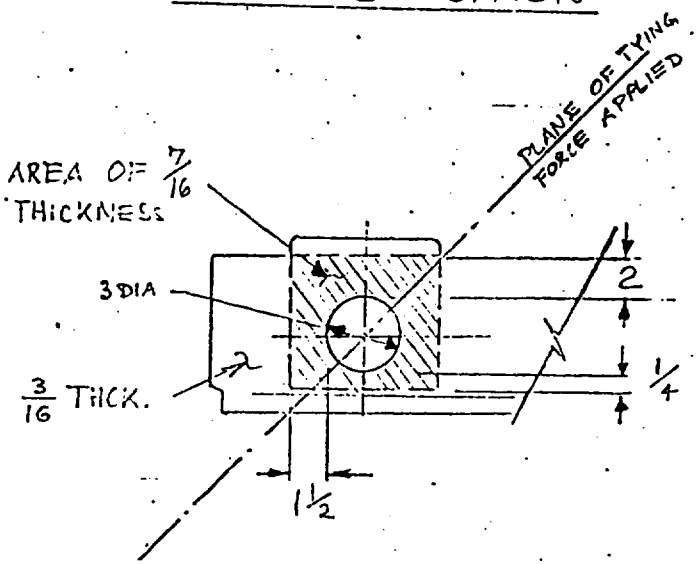

SIMULATED CONDITION

CIRCULAR PLATE WITH CONCENTRIC HOLE

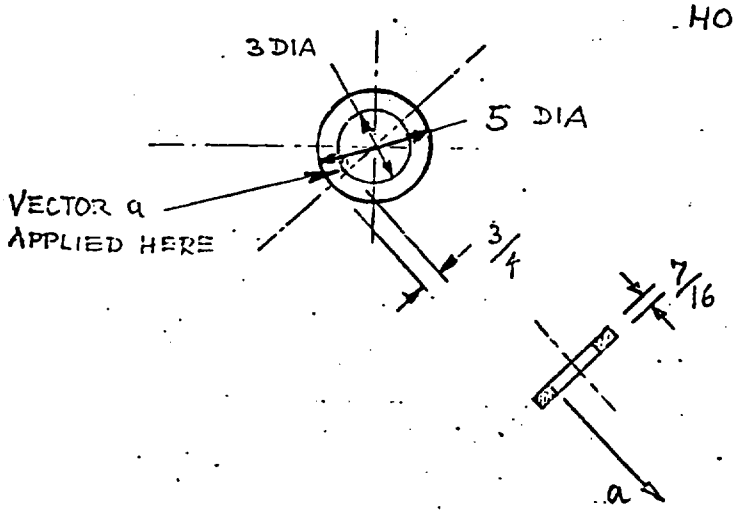

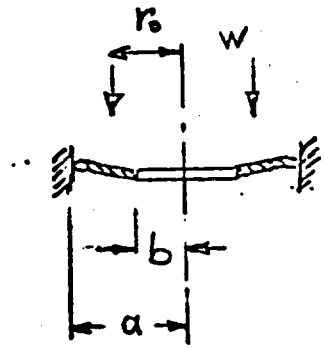

Circular Plate
With Concentric
Hole
Outer Edge Fixed
Inner Edge Free

Uniform load on concentric circular ring of Radius r_o.

Our application shows only a local area where the hook touches the back-up plate. To about conform with the conditions of the formula, we multiply the force with 1.3.

Max. stress at inner edge:

$$S_t = \frac{3\,w}{4\,mt^2}\,(m+1)\left(2\log_e \frac{a}{r_o} + \frac{r_o^2}{a^2} - 1\right) -$$

$$- \frac{6\,M}{t^2}\;\frac{\frac{a^2}{a^2}(m-1) - \frac{b^2}{b^2}(m+1)}{(m-1) + (m+1)}$$

Factor M:

$$M - \frac{W}{8\,m}\,(m-1) + 2\left(2\log_e \frac{a}{r_o} + \frac{r_o^2}{a^2} - 1\right)$$

W = Total applied load = 1.3 x Vector "x" = 1.3 x 2350 =
= 3700 lbs.

m = Reciprocal of (Poisson's Ratio) = $\frac{1}{0.27}$ = 3.7

t = Thickness of plate = 0.44 in.

a = outside radius = 2.5 in.

b = inside radius = 1.5 in.

r_o = radius of location of applied force = 2 in.

$$S_t = \frac{3 \times 3.700}{4 \times 3.7\ (0.44)^2}\ (3.7 + 1)\left(2 \log_e \frac{2.5}{2.0} + \frac{2^2}{2.5^2} - 1\right)$$

$$- \frac{6 \times 114.3}{(0.44)^2}\ \frac{2.5^2\ (3.7 - 1) - 1.5^2\ (3.7 + 1)}{2.5^2\ (3.7 - 1) + 1.5^2\ (3.7 + 1)} =$$

$$= -1233.7 \quad 4.7 \times 0.86 \quad - 3542 \quad \frac{16.875 - 10.575}{16.875 + 10.575} =$$

$$= -498.7 - 812.9 = \underline{-1,311.5 \text{ PSI}}$$

$$M = \frac{3700}{8 \times 3.7}\ (3.7 - 1) + 2\left(2 \log_e \frac{2.5}{2.0} + \frac{2^2}{2.5^2} - 1\right)$$

$$= 39.8 \quad 2.7 + 0.172 \quad = \quad 114.3$$

2.2 VECTOR "b" PULLING IN PLANE OF HOLE

According to the sketch, the tendency to shear occurs at two weak points with the following area:

$$A = (1.6 + 0.7) \times 0.44 = 1.02 \text{ in}^2$$

$$\underline{\text{Stress } S_s} = \frac{{}^fV^2/^2}{A} = \frac{30,500}{1.02} = \underline{29,900 \text{ PSI}}$$

$$S_{syield}$$

3. WELDING OF THE STACKING BRACKET

The fillet welds are located in two planes on the container shell. Each plane is analyzed separately. The connection welds to the rollover ring are placed in the same level as the other in order to simplify the calculation.

Here again the analysis of the forces applied shows that the tie down force R_t is the worst stress condition on the structural connection.

WELD PATTERN

LOCATION OF THE TWO PLANES

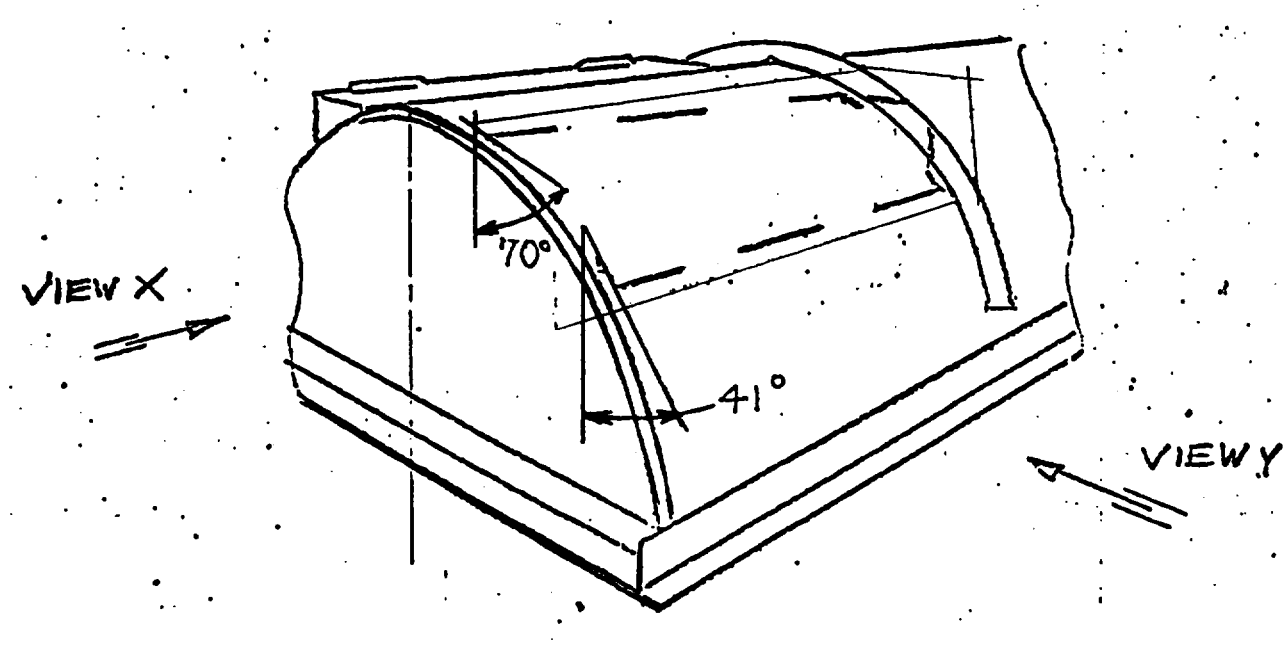

LIFTING FORCES ON WELDS

$F_{cv}/2$ = 2915 lbs.
P_{1s} = 2600 lbs.
P_{1T} = 1000 lbs.
$F_L/4$ = 5038 lbs.
P_{1L} = 4400 lbs.

SCALE 1" 2000 lbs

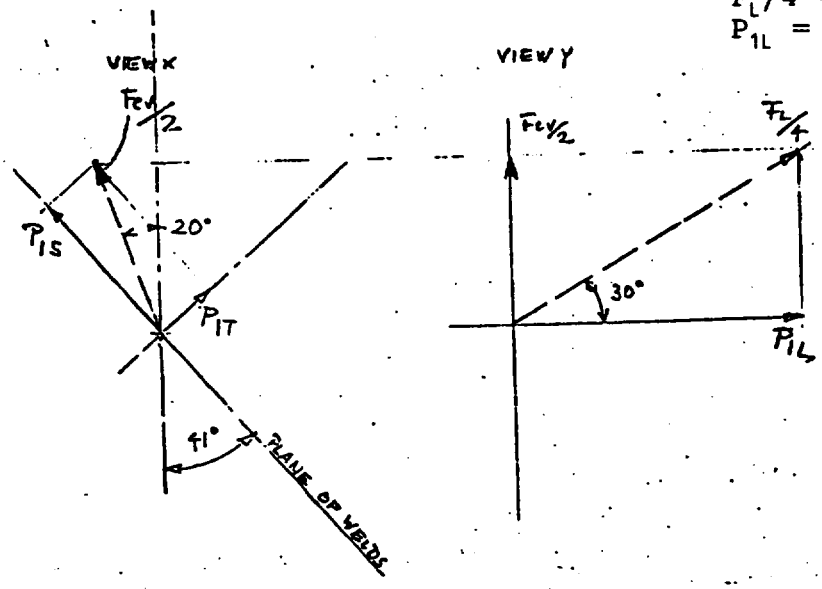

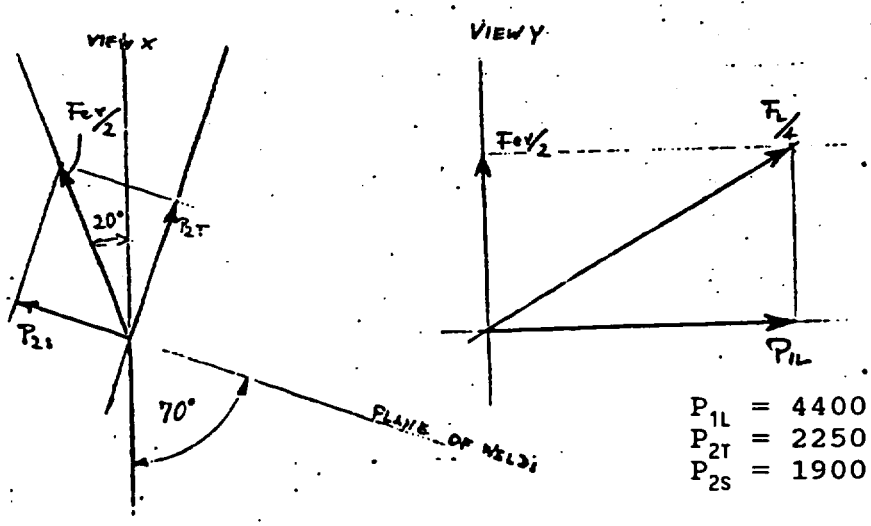

P_{1L} = 4400 lbs.
P_{2T} = 2250 lbs.
P_{2S} = 1900 lbs.

WELDS - TIE DOWN FORCES

SCALE 1" 2000 lbs

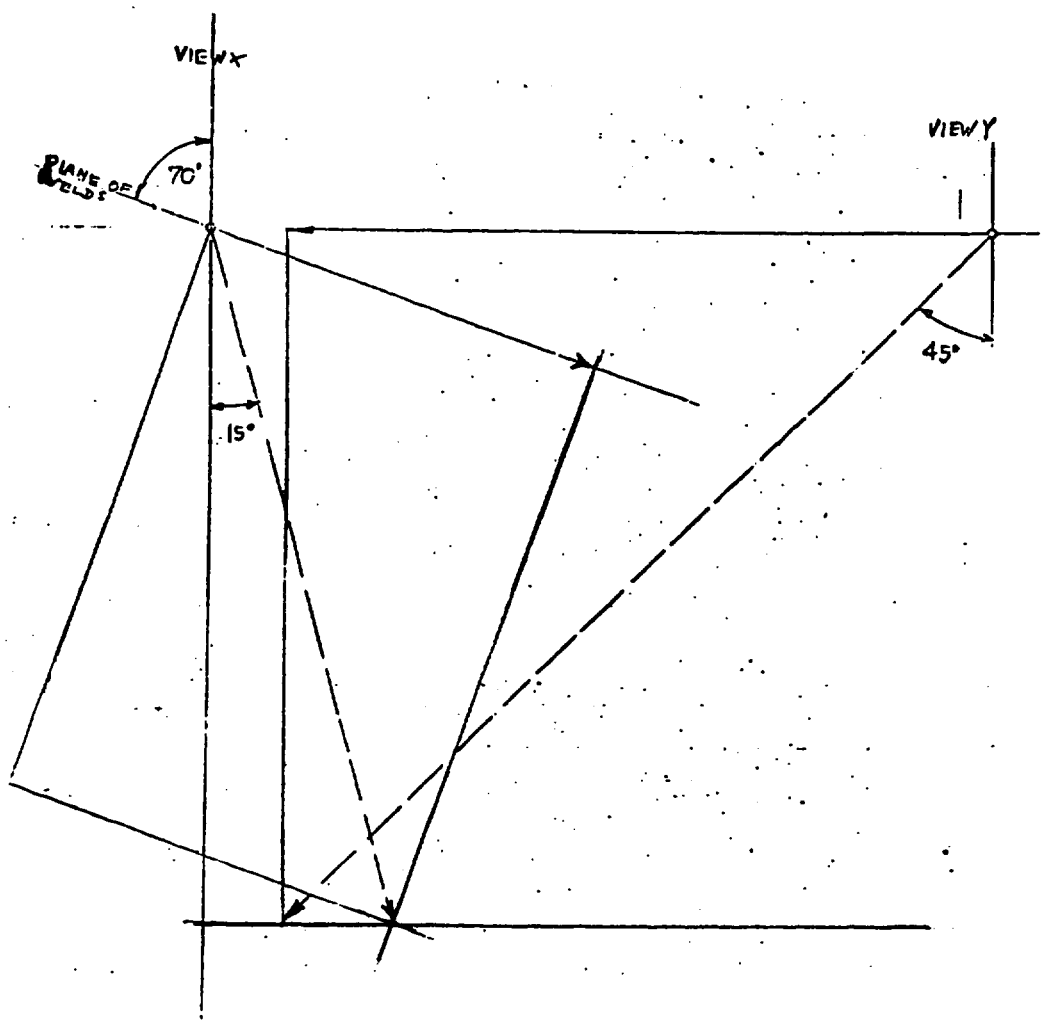

WELDS - TIE DOWN FORCES

SCALE 1" 2000 lbs

$F_{S2}/4$ = 5470 lbs.
$F_{VL}/4$ = 15200 lbs.
P_{3S} = 10000 lbs.
P_{3L} = 10700 lbs.
P_{3L} = 4400 lbs.

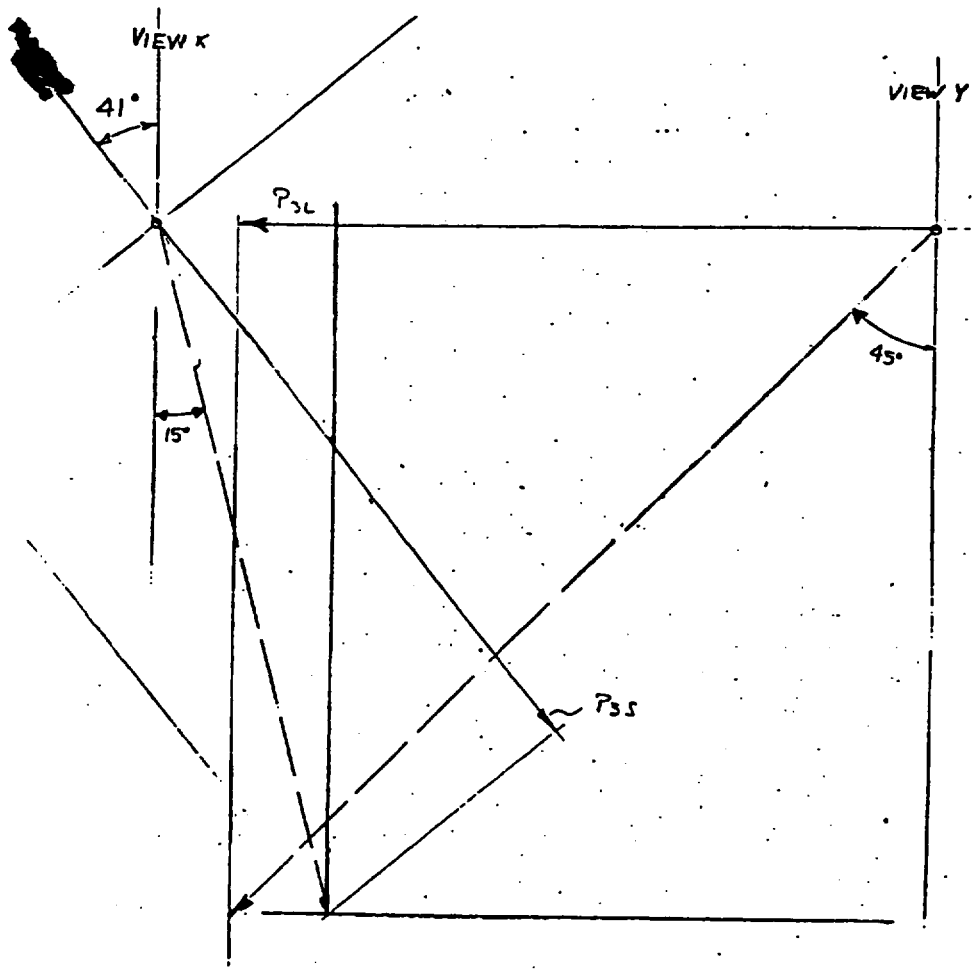

WORST CONDITION - TIE DOWN FORCE IN 41° PLANE WELDS

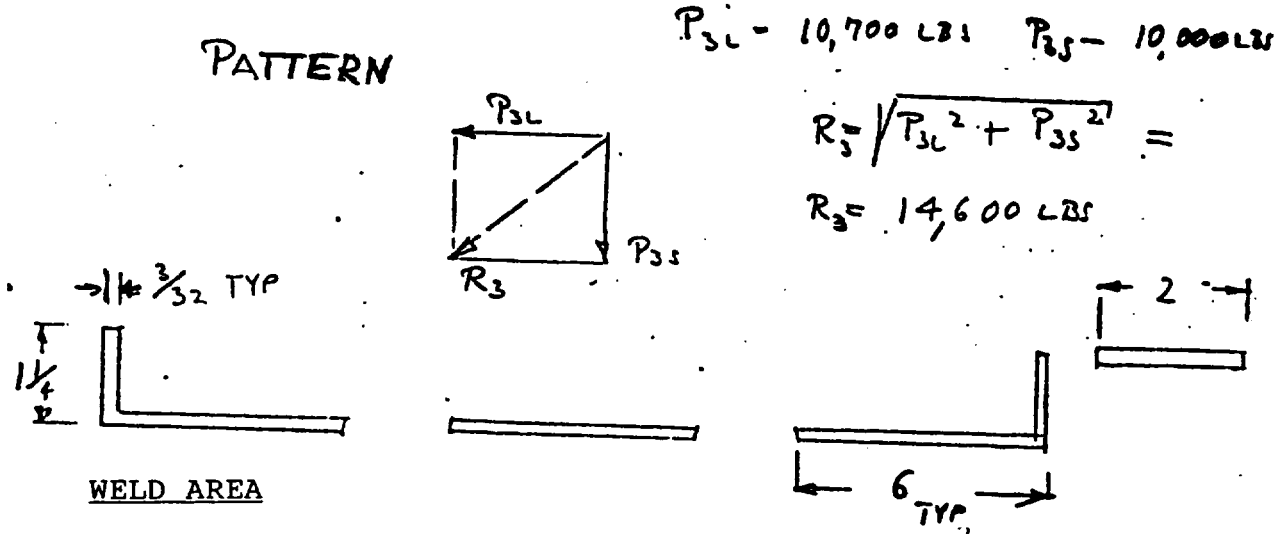

WELD AREA

A = (3 x 6 = 2 x 1.25 + 2) x 0.094 = 2.115 in^2

Only Shear in Welds:

Stress = $\frac{R_3}{A}$ = $\frac{14600}{2.115}$ = 6920 psi < allow =

= 11,000 psi

ALLOWABLE STRESS:

For fillet welds dynamic stress - STL. 1010 - 1020

allow = 11,000 psi

V. MODES OF FAILURE

1) STACKING BRACKET

The lift holes would be torn out if an extreme sidewise tie down force would be applied.

The stacking bracket connection welds would be peeled apart if any local excessive lifting force would bring damage. The containment of the shell would always be sustained as the skin could not be torn due to the following thesis:

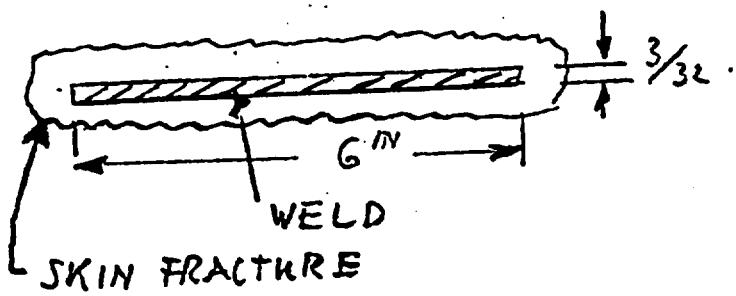

The cross-sectional area of the skin is about twice the weld area.

$$\text{Ratio } \frac{As}{Aw} = \frac{12.5 \times 0.089}{6 \times 0.094} = \frac{1.97}{1} = 2:1$$

2) TOWING PROVISIONS

The positioning of the tie down force near the towing hole would mean that during excessive shock the tie down chains or ropes fail. This is obvious, as the container base plus lower shell and hardwood skid and rollover braces are connected to a very rigid structure.