APPLICATION FOR USE OF THE MODEL B SHIPPING CONTAINER FOR TRANSPORT OF RADIOACTIVE MATERIALS

B&W FUEL COMPANY

NOVEMBER 1994

Approvals:

TS WILKERSON 11-29-94
Manager, Manufacturing Engineering — Date

11-29-94
Manager, Manufacturing — Date

11-29-94
Manager, Quality — Date

KS KNADD 11-23-94
Manager, Safety and Licensing — Date

AR SHUMAKER 11-28-94
Project Engineer 11/28/94 — Date

TABLE OF CONTENTS

1.0 This section provides the safety demonstration of shipping design, construction, and contents as required by 10CFR71.

1.1 Package Description (71.33)

1.1.1 Gross weight loaded with two fuel assemblies and components will be 7650 lbs. maximum.

1.1.2 Model B.

1.1.3 The shipping container is constructed primarily of carbon steel as described in the drawings listed in Exhibit A.

1.1.3.1 The minimum .020" thick zircaloy or .016" thick stainless steel cladding of the fuel rods is the containment vessel. The loaded fuel rods are arranged in a rigid configuration with a 8.6"x8.6" maximum cross section and having a volume of water to UO_2 ratio of not more than 2.0.

1.1.3.2 Two 3/16 inch thick full length boronated stainless steel plates containing at least 1.5% by weight natural Boron are located between the two fuel assemblies as non-fissile neutron absorbers.

1.1.3.3 The shell of the container is a cylindrical structure constructed of 0.089" thick carbon steel sheet with end domes of 0.125" thick carbon steel. Additional items to stiffen the outer shell to provide support to its basic structure are as follows:

* A series of two 90° angles which are rolled & welded circumferentially to the shell.

* The parting flanges on both the upper and lower

sections of the container shell.

* The base structure of the container consists primarily of two full length angles welded to the lower half of the container shell.

1.1.3.4 Pressure relief and filler valves, lifting and tiedown devices, humidity indicators and accelerometer viewing ports are on the referenced drawings.

1.1.3.5 Heat dissipation not applicable.

1.1.4 Coolants not applicable.

1.2 Package Contents

1.2.1 Radioactive contents are UO_2 sintered pellets .36" - .38 " in diameter, enriched to a maximum of 4.60% in the U-235 isotope.

1.2.1.1 Shipment of UO2 pellets enriched > 4.6% and < 5.1% may be shipped provided that only one fuel assembly be shipped per container.

1.2.2 For contents of 1.2.1, each assembly may contain up to 23.4 kg U-235 or 46.8 kg U-235 for the container of two assemblies.

1.2.2.1 For contents of 1.2.1.1, the assembly may contain up to 25.9 kg U-235.

1.2.3 UO_2 sintered pellets as described in 1.2.1.

1.2.4 Not applicable; nuclear safety analysis presumes optimum conditions.

1.2.5 Maximum weight of the contents is 3400 lbs.

1.2.6 Decay heat not applicable.

1.2.7 A nylon shim may be shipped between the contact surfaces of each control component assembly (CCA) and the fuel assembly, at times, to help preserve the quality of these core components. This shim is removed as part of the packaging unloading process.

Because some CCA designs have increased in length at the coupling area, the container end gate must be spaced further from the strong back structure to accommodate the longer CCA couplings. This extra end gate spacing will be achieved by adding steel block adapters between the hinged end gate and strong back frame.

2.0 General Standards For All Packaging (71.43)

2.1 There will be no significant chemical, galvanic or other reaction among the container components, or between the container and the fuel assemblies. The shipping container is made primarily of carbon steel and the exposed material of the fuel assemblies is primarily zircaloy and stainless steel. Packing media may include polethylene and fibre panels outside the fuel regions.

2.2 The self-contained closure hardware must be deliberately unfastened.

2.3 Lifting Devices

2.3.1 There are 8 lifting eyes on the lid of the container, 4 of which (2 on opposite sides of each end) are used to lift the loaded container. This was shown by lifting the loaded container free of the floor by each of its lifting eyes and holding to illustrate no yielding in the lifting eye. The system of 4 lifting eyes consequently is capable of supporting three times the weight of the loaded container without generating stress in excess of the yield strength.

2.3.2 Covered by 2.3.1 above.

2.3.3 There are no other structural parts of the package which could conceivably be used to lift the package. Further assurance of the use of only designated lift points is provided by adequate identification of the proper lift points on the container, and the fact that the container

will be part of a Fissile Class II or III Shipment. As such the containers shall be transported with a vehicle for the sole use of BWFC. The controls imposed by B&W for loading and unloading the containers will assure that only the designated system of lifting devices is used, and that only one loaded container is lifted at a time.

2.3.4 Failure of the lifting devices under load will not impair the containment or shielding properties of the package. Such failure if it occurred would only damage a portion of the container cover which is not considered as shielding and is not part of the structural members retaining the asemblies in the container. Detailed evaluation of the mode of failure involved is included in Exhibit C.

2.3.4.1 Tie-down devices

There is no system of tie-down devices which is a structural part of the container. The container is secured to the vehicle by binder chains passed over the container and fastened to the truck bed. In addition the containers will be chocked on the truck bed.

2.3.4.2 Since this container will be part of a Fissile Class II or III Shipment, it will be transported by an exclusive use vehicle, with specific instruction in the special arrangements providing for sole use by the BWFC. BWFC will supervise the loading of the vehicle to assure that the containers are tied down as described above. This administrative control by B&W is adequate to assure that no structural part of the container is used as a tie down device. Detailed engineering evaluation of the possible tie-down points

is included in Exhibit C.

2.3.4.3 There is no tie-down device which is a structural part of the container.

3.0 Criticality Standards for Fissile Material Packages (71.33)

3.1 The damaged container nuclear safety analysis demonstrates that an array of damaged containers is subcritical under varying conditions of moderation and full reflection. Consequently, one container is likewise subcritical under the criteria of this paragraph.

3.2 Not applicable; there will be no liquid contents during normal transport.

3.3 Not applicable; there will be no liquid contents during normal transport.

4.0 Standards for Normal Conditions of Transport (71.35)

4.1 A prototype container was tested under normal conditions of transport. The report of the test is included in the attachments to this section, as Exhibit B.

The materials of the containers and contents are such that their effectiveness cannot be substantially effected by either temperature extreme of 130°F, or -40°F.

Pressure relief valves will maintain the container shell pressure differential to less than 4.5 psi.

Water spray test is not applicable because the container shell and structural components are steel.

The free drop tests performed resulted in no significant damage to the container or contents.

The corner drop test is not required by virtue of the materials of construction.

The penetration test was not performed in that it is not credible that the test could puncture the container shell and result in the release of radioactive material.

The compression test performed was limited to demonstrating that two fully loaded containers could be stacked on top of one container. This test is adequate to assure safety in

that the shipments will be made by exclusive use vehicle as Fissile Class II or III, and B&W administrative controls will limit the stacking height.

In view of the above testing and assessment, it is concluded that:

4.1.1 There will be no release of radioactive material from the containment vessel.

4.1.2 The effectiveness of the packaging will not be substantially reduced.

4.1.3 There will be no mixture of gasses or vapors in the package which could through any credible increase of pressure or explosion, significantly reduce the effectiveness of the package.

4.1.4 Not applicable in that coolants are not involved.

4.1.5 Not applicable in that coolants are not involved.

4.2 The design and construction of the container and contents is such that under normal conditions of transport:

4.2.1 The package will be subcritical, see 71.33 (3.1).

4.2.2 The geometric form of the contents were not substantially altered by normal transport conditions.

4.2.3 Not required in that nuclear safety analysis presumes in-leakage of water.

4.2.4 There will be no substantial reduction of the effectiveness of the packaging including:

4.2.4.1 Reduction by more than 5 percent in the total effective volume of the packaging on which nuclear safety is assessed;

4.2.4.2 Reduction by more than 5 percent in the effective spacing on which nuclear safety is assessed, between the center of the containment vessel and the outer surface of the packaging; or

4.2.4.3 Occurrence of any aperture in the outer surface of the packaging large enough to permit the entry of a 4-inch cube.

5.0 Standards for Hypothetical Accident Conditions For a Single Package (71.73)

5.1 The effects of a hypothetical accident on a loaded container have been assessed as follows:

Free Drop - a prototype container loaded with two dummy fuel assemblies was drop tested. A report of the results of the tests is included with this section as Exhibit B.

Puncture - although this test is essential in that nuclear safety analysis presumes the container to be flooded, the test was performed and is reported in Exhibit B.

Thermal - all materials of the container and contents significant to safety are such that they can withstand 1475°F for 30 minutes.

Water Immersion - this test is not necessary since nuclear safety analysis presumes the container to be flooded.

The nuclear safety analysis of an array of damaged shipping containers presented in Section 6.0 shows the array to be subcritical. Consequently, a single container from the array is subcritical.

6.0 Specific Standards for a Fissile Class II or III Shipment (71.59 & 71.61)

6.1 The undamaged shipment shall be subcritical with an identical shipment in contact with it and with the two shipments closely reflected on all sides by water if considered as Fissile Class III. If Fissile Class II, five times the allowable number of undamaged packages would be subcritical stacked together in any arrangement and closely reflected on all sides of the stack by water. Undamaged shipping containers present a minimum of twenty-four inches separative distance between assemblies in adjacent containers. Since an infinitive array of damaged containers with only seven to eighteen inches separation distance is subcritical, the undamaged containers with their additional spacing are likewise subcritical.

6.2 The shipment must be subcritical if each package were

subject to the hypotehtical accident conditions of Fissile Class III. Fissile Class II conditions require that twice the allowable number of packages, if each package were subjected to the tests specified in 71.73 would be subcritical if stacked together in any arrangement, closely reflected on all sides of the stack by water, and with optimum interspersed hydrogenous moderation. Nuclear safety analyses have been performed for an infinite array of loaded shipping containers presumed damaged in excess of the actual damage experienced in testing and arranged in the most reactive configuration. Maximum K_{eff} found considering various degrees of moderation was 0.947 at full moderation, generally reducing as degree of moderation was reduced. The 0.947 value includes 2 sigma + .02.

For the purpose of this analysis, the container shell was considered to be crushed to the level of the internal structural members for its full length and entire periphery. The containers were then envisioned to be in an array of top to top and bottom to bottom. This arrangement provides for closer approach of assemblies than does the top to bottom arrangement normal to shipping configuration, and is considered to be the most reactive. Separative distances were then determined allowing only for the spacing provided by the internal structurals and ignoring the contribution of such external structures as the skid frame, the stacking brackets and shell strengthening ribs. The smallest separation distances considered credible under these conditions are seven inches between top to top layers, and eighteen inches between bottom to bottom layers. Minimum side to side separation between the nearest assemblies in sets is eight inches. The assemblies were presumed to be retained in design relationship with the boron-steel poison plates and steel strongback plates, and contained within the steel shell. The results of the hypothetical accident testing reported elsewhere show the extent of crushing postulated to be far in excess of that actually occurring in drop tests, thus making this analysis ultra-conservative.

The criticality safety analysis for the Model B fresh fuel shipping container was performed using the KENO-IV Monte Carlo code. Infinitely dilute cross sections were obtained from the 123 XSDRN master library cross section set. The NITAWL code was used to generate a 123 group KENO-IV working library that included resonance self shielding of the isotope uranium-238, the only resonance absorber present in the fresh fuel. The fuel lattice rod-to-rod self shielding for the U-238 resonance was accounted for

with a Dancoff factor by NITAWL. The Dancoff factor was generated by the B&W NULIF code, a neutron spectrum generator and spectrum weighted few group constant calculator.

Three dimensional heterogeneous geometry models were used for all KENO-IV criticality analyses. Individual components of the fuel assembly lattice were modeled along with the poison plates adjacent to each fuel assembly, surrounding moderator regions and container shell. Moderator was substituted for the fuel assembly grids, end fittings and structural steel components as a conservative geometry modeling simplification.

The accident condition package array was modeled as an infinite (symmetry boundary conditions) XY crushed container array of one active fuel column length (144 inches) with eight (8) inches of water on each end. For the most reactive moderation condition, 100% water moderator and water reflector, KENO calculations were made for both an eight (8) and twelve (12) inch water reflector at each end of the active fuel stack. There was no significant difference in the K_{eff} due to the end reflector thickness.

The normal condition package array was modeled as an infinite (symmetry boundary conditions) XYZ container array with a 24 inch (a minimum) separation between fuel assemblies of different containers. For this analysis, the container was replaced by moderator.

K_{eff} was determined both as a function of moderator density and container array dimensions. First, keeping the given crushed dimensions, K_{eff} was determined for moderator densities from 100% moderator density, down. The highest K_{eff} for these cases is 0.947 at 100% moderator density. Then, the moderator density was kept constant at 100% and the separation distances were decreased to 80% of their original accident values. This produced a higher K_{eff} of 0.951. The 20% additional reduction in dimensions is contrary to drop test results. All $K_{eff's}$ include 2 sigma + 0.02.

A case was also run at nominal dimensions and 100% moderator to represent an infinite xyz array of containers, K_{eff} was less than 0.927 and within 1 sigma of the reference case nominal K_{eff}.

The following conservatisms add a further factor of safety

to the inherent safety of the system already demonstrated.

6.2.1 Credit has not been taken for the decrease in reactivity that results from other steel present; the "T" sections, the hold down bows, and strongback structural members.

6.2.2 The nominal separative distances are smaller than can reasonably be predicted considering the actual drop test damage, and also recognizing that external structural members do in fact remain in place and contribute to separation.

7.0 Operating and Maintenance Procedures

7.1 Use and maintenance of the Model B fresh fuel shipping container is controlled by formal written procedures approved by appropriate plant management. These procedures specifically describe the sequence of operations for packaging, shipping, labeling, unloading, storing and maintaining the Model B shipping container to insure it meets the requirements set forth in its Certificate of Compliance.

Part of the requirements of these procedures dictate that a formal inspection is conducted prior to the use of each container. It consists of the following:

- The pressure pads and bow clamps (fuel assembly clamping mechanism) are properly aligned.
- The rubber pads are not damaged in any way.
- The neutron poison plates are present and acceptable.
- There are no broken welds, worn or stripped bolts, nuts, or "T" bolt slots, or excessive wear on support arm holes.
- The "O"-ring tank seat is acceptable and the rubber shock mounts have not deteriorated.
- There is no permanent set deflection in a shock mount.
- All threads, ball and sockets, ball lock pins, and friction parts are oiled when needed and all excessive oil is removed. All pillow block bearings are greased as necessary.

- Pressure pad (assembly clamps) adjustments meet their respective specifications.
- The out riggers (container supports) have no missing ball lock pins or damaged parts.
- The humidity indicators, when used, display blue in color.
- All shock indicators are properly installed, calibrated and correctly set.
- All sway indicator rods are properly set.
- If applicable, verify that the container is initially pressurized to two (2) psi, in accordance with the applicable procedure.
- The proper radiation surveys have been conducted in accordance with DOT regulations.
- Each container incorporates a tamperseal on the cover.
- All nuclear safety rules are strictly adhered to which includes enrichment verification to assure that fuel assemblies above 4.6% are shipped one fuel assembly per container. Health Safety shall be responsible to check to ensure that all these requirments are being met.

If any of the items are not in conformance, the proper corrective action is taken prior to the release of the container.

Other key points covered in these procedures includes:

- The proper equipment needed.
- The operator's qualifications.
- The acceptance criteria for routine inspections, maintenance requirements and maintenance records.
- Precautions that should be taken when handling the Model B shipping container.
- Step-by-step sequential instructions for loading and unloading the container.

Procedures have also been written to instruct the appropriate personnel at the reactor sites on the proper and safe use of the Model B shipping containers.

7.2 Records pertaining to Model B container shipments as required by 10 CFR 71 are retained for a minimum of 2 years.

7.3 Our NRC approved QA Manual used by the CNFP covers the design, fabrication, testing, inspection, use and repair of radioactive materials shipping containers subject to the QA requirements of 10 CFR 71.

8.0 Acceptance Tests

8.1 Visual inspections shall be performed on all Model-B containers to verify all welds and component dimensions, as identified by the drawings in Exhibit A, prior to the first use. Prior to each additional use (after routine maintenance), each container is reinspected in accordance with approved procedures outlined in section 7.0. The structural integrity of each container is then maintained upon completion of each visual inspection prior to loading.

Pressure and leak tests are not applicable to the testing of the Model-B containers. The containers are not subjected to internal pressure since only unirradiated clad fuel is shipped. Component testing is accomplished as part of the normal fuel loading process. Deficiencies or deviations are reported as required by the BWFC Shipping Container Quality Program. Testing of rupture discs and fluid transport devices are not applicable since these devices are not used in the Model-B container design. Testing of gasketed surfaces is not required since gaskets are non-safety related and are only intended to maintain product quality. Tests for shielding integrity are not necessary since no shielding is incorporated into the Model-B container design. There are no thermal acceptance tests required since there are no heat generating materials authorized for shipments in Model-B containers.

EXHIBIT A

MODEL B - FRESH FUEL SHIPPING CONTAINER DRAWING LIST

B&W Drawing No.	Title
PE-52F	Strongback Assembly & Details
PE-53F	Container Assembly & Components
PE-54F	Upper Weldment & Lower Weldment and Details

4.1.6 Stacking features include four (4) brackets on the container cover which permit stacking like containers one directly above the other, as well as, side by side placement of two bottom containers with a third upper container straddling both in a pyramid manner.

4.1.7 Other features include a dessicant basket, humidity indicator, dessicant access port, automatic/manual two way breather valve, four view ports (two each end) for inspection of mechanical accelerometers mounted to suspend frame, and an air filling valve at the opposite end of the container from the breather valve which may be used for inert gas purging.

4.2 PHYSICAL DATA:

CONTAINER SIZE: length = 205"
width = 44 1/2"
height = 47 1/4"

CUBAGE: cu. ft. = 250

AS TESTED WEIGHTS:

Container & Frame	3940-lbs.
Fresh Fuel Cells (2)	3000-lbs.
Gross (Shipping)	6940-lbs.

5.0 METHOD OF TEST:

5.1 GENERAL:

Two dummy fuel cells were provided by BABCOCK & WILCOX COMPANY for the purpose of conducting a series of tests.

Also provided were four (4) weights of 150 lbs. each. These were added internally to the dummy fuel cells increasing the weight of each to 1800 lbs. for additional tests.

5.1.1 An edgewise rotational drop from a height of eighteen (18) inches was then performed to test the ability of

A minimum of 2 inches was recorded between the bottom of the frame and the container skin.

C) FWD END - A minimum clearance of 4 1/4" between the cover and the frame was recorded.

There was evidence that the frame clamps had also contacted the shockmount bracket at this end although the VEXILAR accelerometers had not tripped.

A minimum clearance of 4 inches was recorded between the bottom of the frame and the container skin.

It should be noted that the condition of the container was excellent considering the drop that it had experienced and since no apparent damage had resulted except for the cover stacking bracket, it was decided to repair the dented portion of the cover skin and proceed with the shipping test as scheduled. The total time of the delay was approximately two hours.

6.12.1 SHIPPING TEST: (with 34,700 lbs. extra weight)

The container, with two dummy fuel cells instrumented for shock recording was secured to a commerical flat bed trailer with 34,700 lbs. added to the trailer bed simulating the weight of five additional loaded containers.

A predetermined course of 20 miles was traveled including state highways, as well as, rough back country roads.

6.12.1.1 RESULTS: Recorded shock levels were well within acceptable limits.

6.12.2 SHIPPING TEST: (container and two dummy fuel cells only)

6.14.1.1 RESULTS: No Damage - Data Acceptable.

6.15 LEAKAGE TEST:

6.15.1 An airtight plug was installed in the pressure relief valve opening in the end of the container and the container was pressurized to 10 P.S.I.G.

The gage was monitored for 10 minutes during which a pressure drop of .2 lbs. was observed. The pressure was brought back up to 10 P.S.I.G and the time and pressure recorded every 15 minutes for one hour. Soap solution was applied during this one hour to all welds and joints in search of leaks.

6.15.1.1 RESULTS: No leaks or pressure drop.

7.0 CONTAINER MODIFICATIONS:

7.1 As a result of the tests, the following changes were incorporated in the container:

A) SHOCKMOUNT RELOCATION: The shockmounts were raised 1 1/2" on their mounting brackets on the container in order to raise the suspension frame. This increased the bottom clearance thereby eliminating frame contact with bottom skin. This is possible since cover clearances during tests were greater than anticipated.

B) VEXILAR ACCELEROMETER:

1. The two vertically sensitive VEXILAR Accelerometers (one each end of frame) were changed from 11 G"s to 10 G"s trip level.

2. The longitudinally sensitive accelerometer (1) was relocated on the frame to make it more clearly visible from the view ports in the container end.

8.2.1 The ends of the cover received the full force of the impact directly on the two stacking brackets which were depressed to a greater degree than the cover shell itself. Actual measurement disclosed the cover shell had been uniformly depressed 3 inches throughout its length. (See Fig. I)

FIG I.

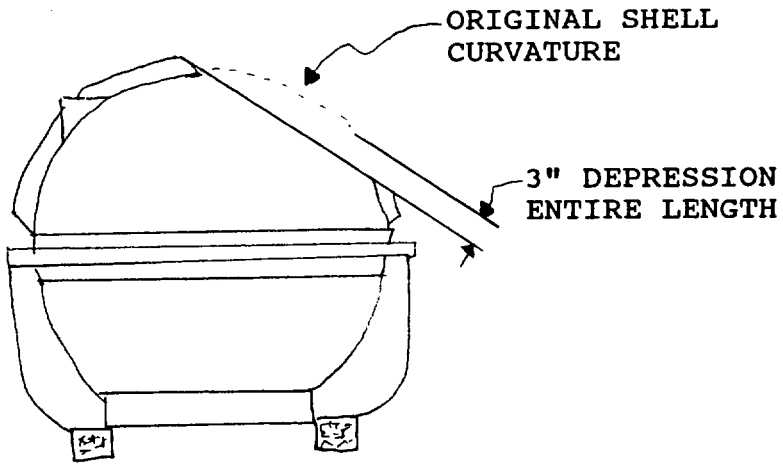

8.2.2 At no time during the tests did the sealing flange hardware either break or even loosen. All were checked after each drop.

8.2.3 The photographs in APPENDIX B clearly show external areas of local container distortion which, considering the drop heights, were of minor consideration.

EXHIBIT C

TABLE OF CONTENTS

TRUCK LOADING CONFIGURATION

6 OR 8 CONTAINERS LOADED

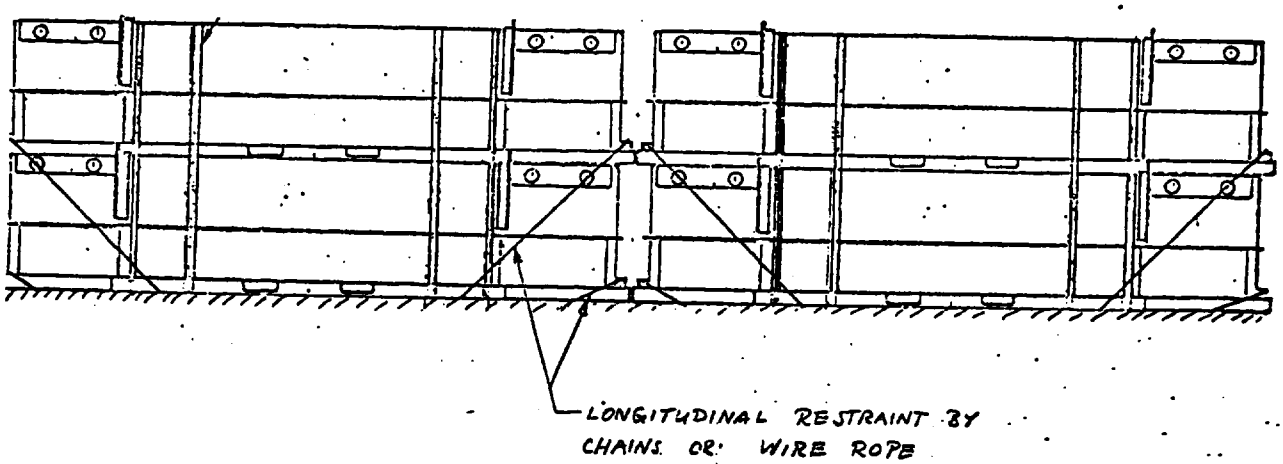

r_o = radius of location of applied force = 2 in.

$$S_t = \frac{3 \times 3.700}{4 \times 3.7\ (0.44)^2}\ (3.7 + 1)\left(2 \log_e \frac{2.5}{2.0} + \frac{2^2}{2.5^2} - 1\right)$$

$$- \frac{6 \times 114.3}{(0.44)^2}\ \frac{2.5^2\ (3.7 - 1) - 1.5^2\ (3.7 + 1)}{2.5^2\ (3.7 - 1) + 1.5^2\ (3.7 + 1)} =$$

$$= -1233.7 \quad 4.7 \times 0.86 \quad - 3542 \quad \frac{16.875 - 10.575}{16.875 + 10.575} =$$

$$= -498.7 - 812.9 = \underline{-1,311.5 \text{ PSI}}$$

$$M = \frac{3700}{8 \times 3.7}\ (3.7 - 1) + 2\left(2 \log_e \frac{2.5}{2.0} + \frac{2^2}{2.5^2} - 1\right)$$

$$= 39.8 \quad 2.7 + 0.172 \quad = \quad 114.3$$

2.2 VECTOR "b" PULLING IN PLANE OF HOLE

According to the sketch on page 16, the tendency to shear occurs at two weak points with the following area:

$$A = (1.6 + 0.7) \times 0.44 = 1.02 \text{ in}^2$$

$$\underline{\text{Stress } S_s} = \frac{F_V{}^2/2}{A} = \frac{30,500}{1.02} = \underline{29,900 \text{ PSI}}$$

S_{syield}

3. WELDING OF THE STACKING BRACKET

The fillet welds are located in two planes on the container shell. Each plane is analyzed separately. The connection welds to the rollover ring are placed in the same level as the other in order to simplify the calculation.

Here again the analysis of the forces applied shows that the tie down force R_t is the worst stress condition on the structural connection.

WELD PATTERN

LOCATION OF THE TWO PLANES

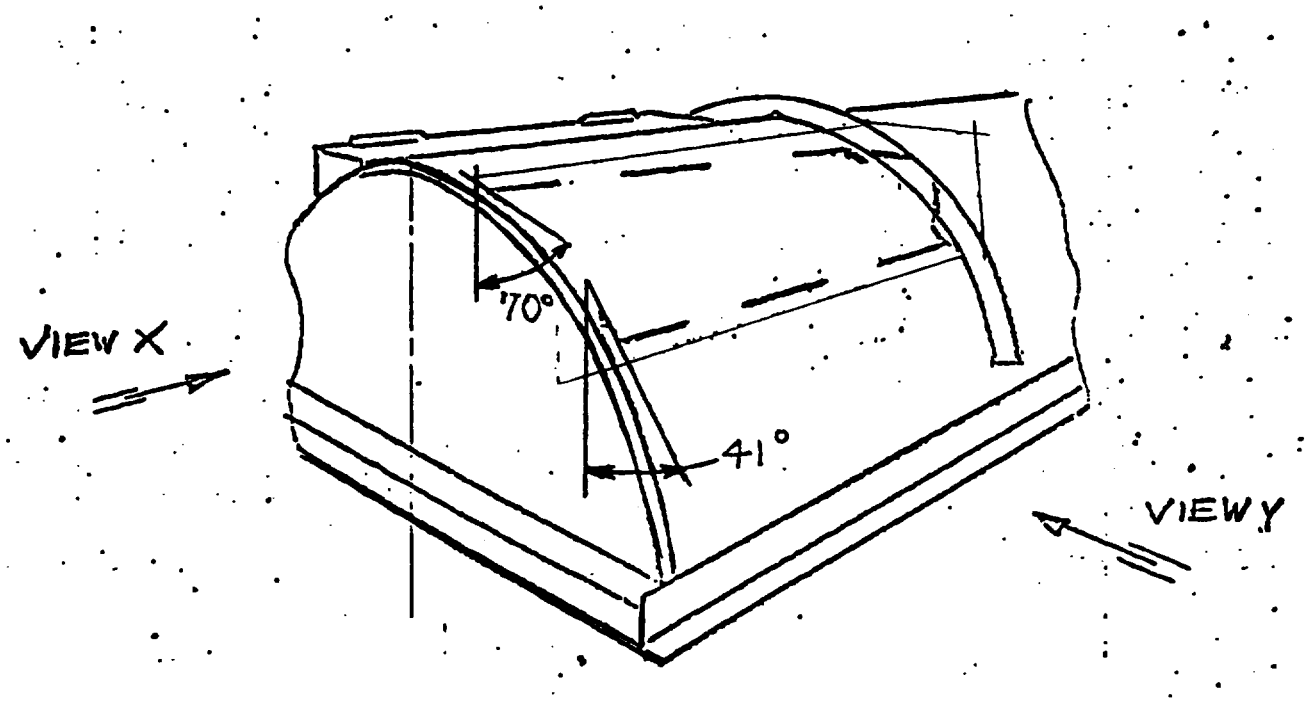

LIFTING FORCES ON WELDS

$F_{cv}/2$ = 2915 lbs.
P_{1s} = 2600 lbs.
P_{1T} = 1000 lbs.
$F_L/4$ = 5038 lbs.
P_{1L} = 4400 lbs.

SCALE 1" ≈ 2000 lbs

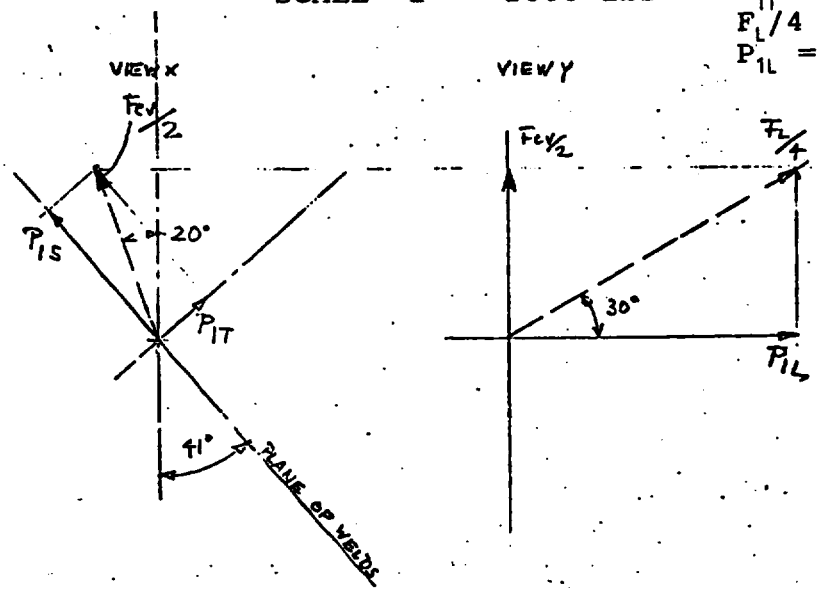

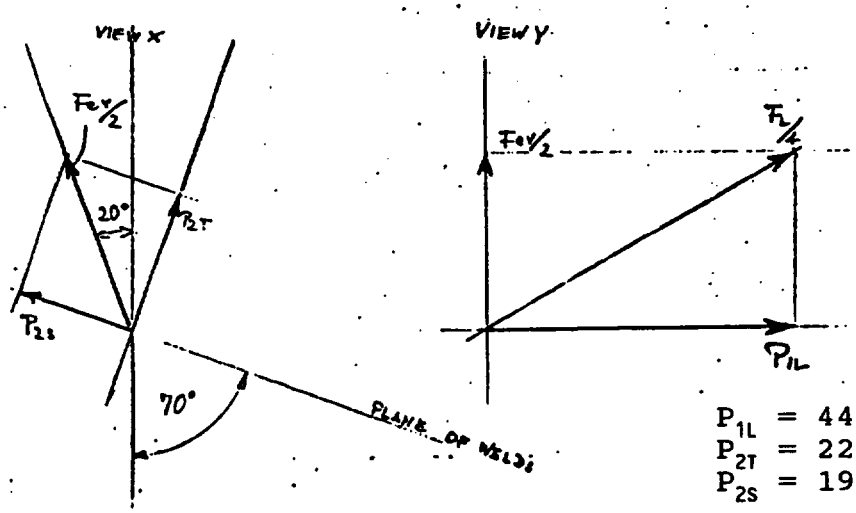

P_{1L} = 4400 lbs.
P_{2T} = 2250 lbs.
P_{2S} = 1900 lbs.

WELDS - TIE DOWN FORCES

SCALE 1" ≈ 2000 lbs

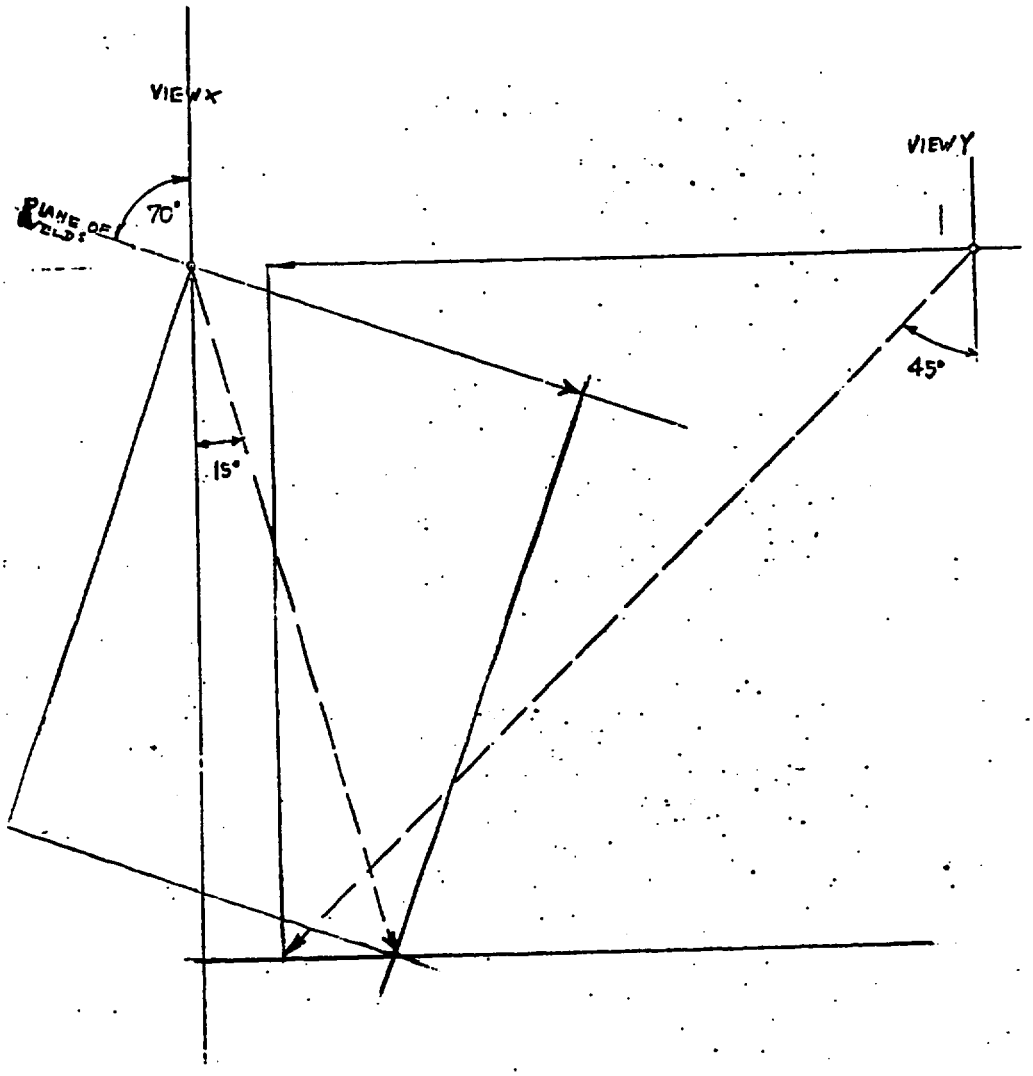

WELDS - TIE DOWN FORCES

SCALE 1" ≈ 2000 lbs

$F_{S2}/4$ = 5470 lbs.
$F_{VL}/4$ = 15200 lbs.
P_{3S} = 10000 lbs.
P_{3L} = 10700 lbs.
P_{3L} = 4400 lbs.

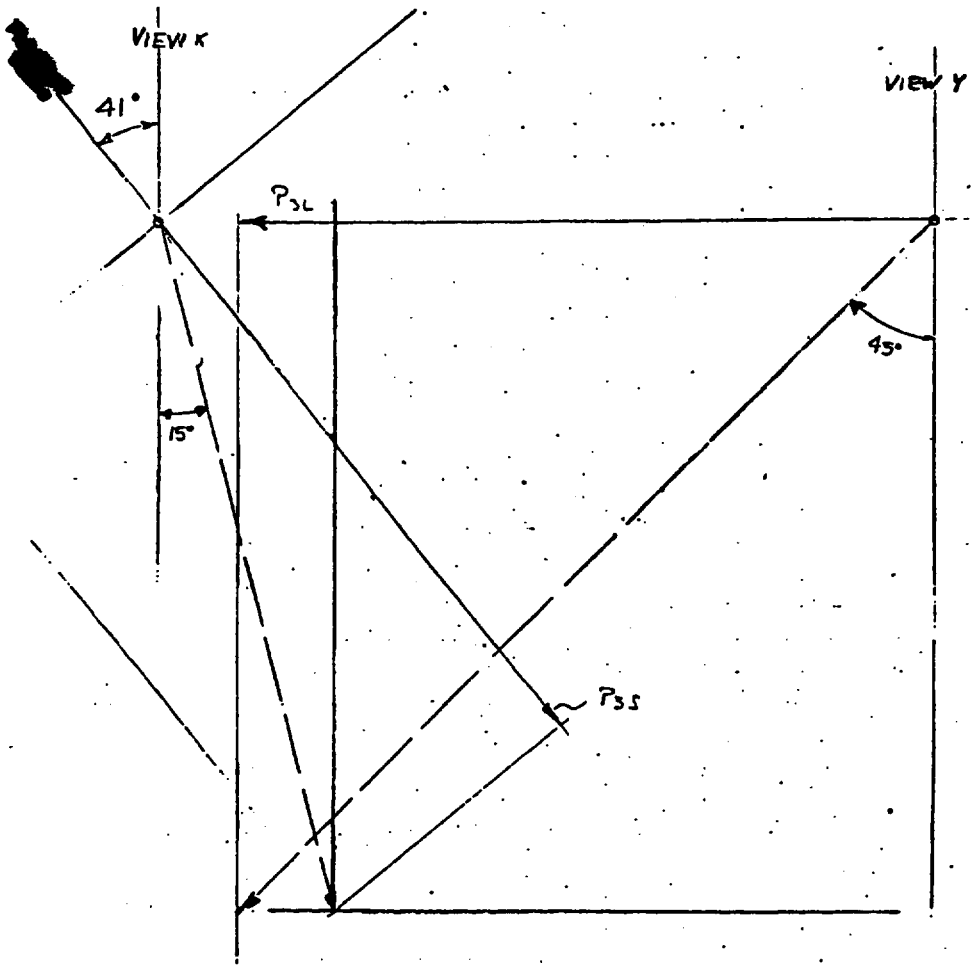

WORST CONDITION - TIE DOWN FORCE IN 41° PLANE WELDS

P_{3L} - 10,700 LBS P_{3S} - 10,000 LBS

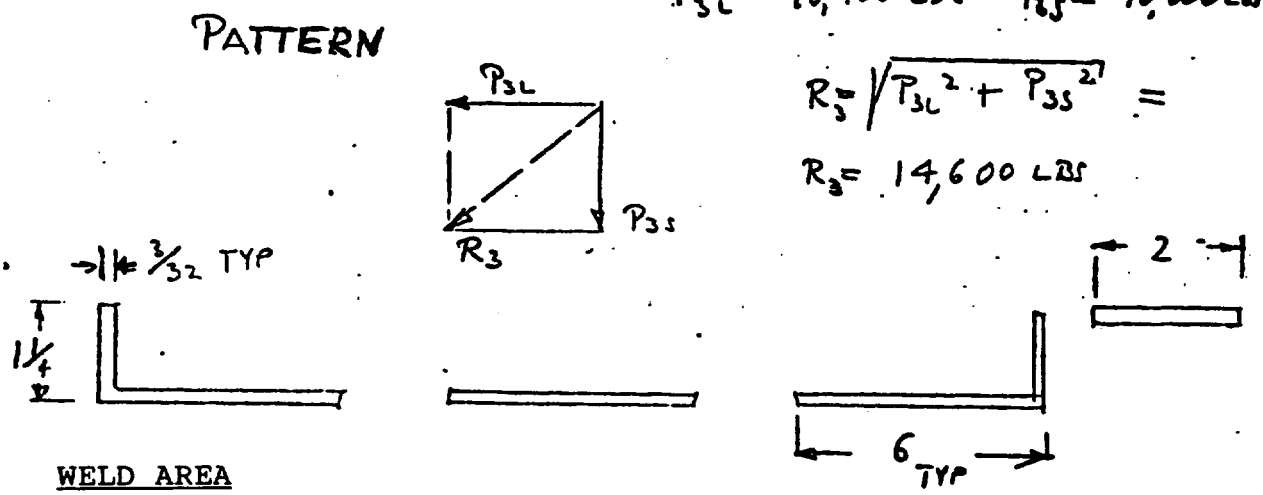

$R_3 = \sqrt{P_{3L}^2 + P_{3S}^2} =$

$R_3 = 14{,}600$ LBS

WELD AREA

A = (3 x 6 = 2 x 1.25 + 2) x 0.094 = 2.115 in^2

Only Shear in Welds:

Stress $= \frac{R_3}{A} = \frac{14600}{2.115} = 6920$ psi < allow =

= 11,000 psi

ALLOWABLE STRESS:

For fillet welds dynamic stress - STL. 1010 - 1020

allow = 11,000 psi

V. MODES OF FAILURE

1) STACKING BRACKET

The lift holes would be torn out if an extreme sidewise tie down force would be applied.

The stacking bracket connection welds would be peeled apart if any local excessive lifting force would bring damage. The containment of the shell would always be sustained as the skin could not be torn due to the following thesis:

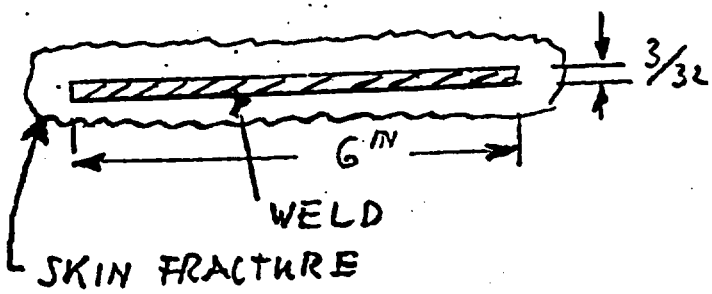

The cross-sectional area of the skin is about twice the weld area.

$$\text{Ratio } \frac{As}{Aw} = \frac{12.5 \times 0.089}{6 \times 0.094} = \frac{1.97}{1} = 2:1$$

2) TOWING PROVISIONS

The positioning of the tie down force near the towing hole would mean that during excessive shock the tie down chains or ropes fail. This is obvious, as the container base plus lower shell and hardwood skid and rollover braces are connected to a very rigid structure.